START

U S
OFFICIAL GAZETTE
UNITED STATES
PATENT OFFICE
VOL NO 1027

FEBRUARY

1983

OFFICIAL GAZETTE

February

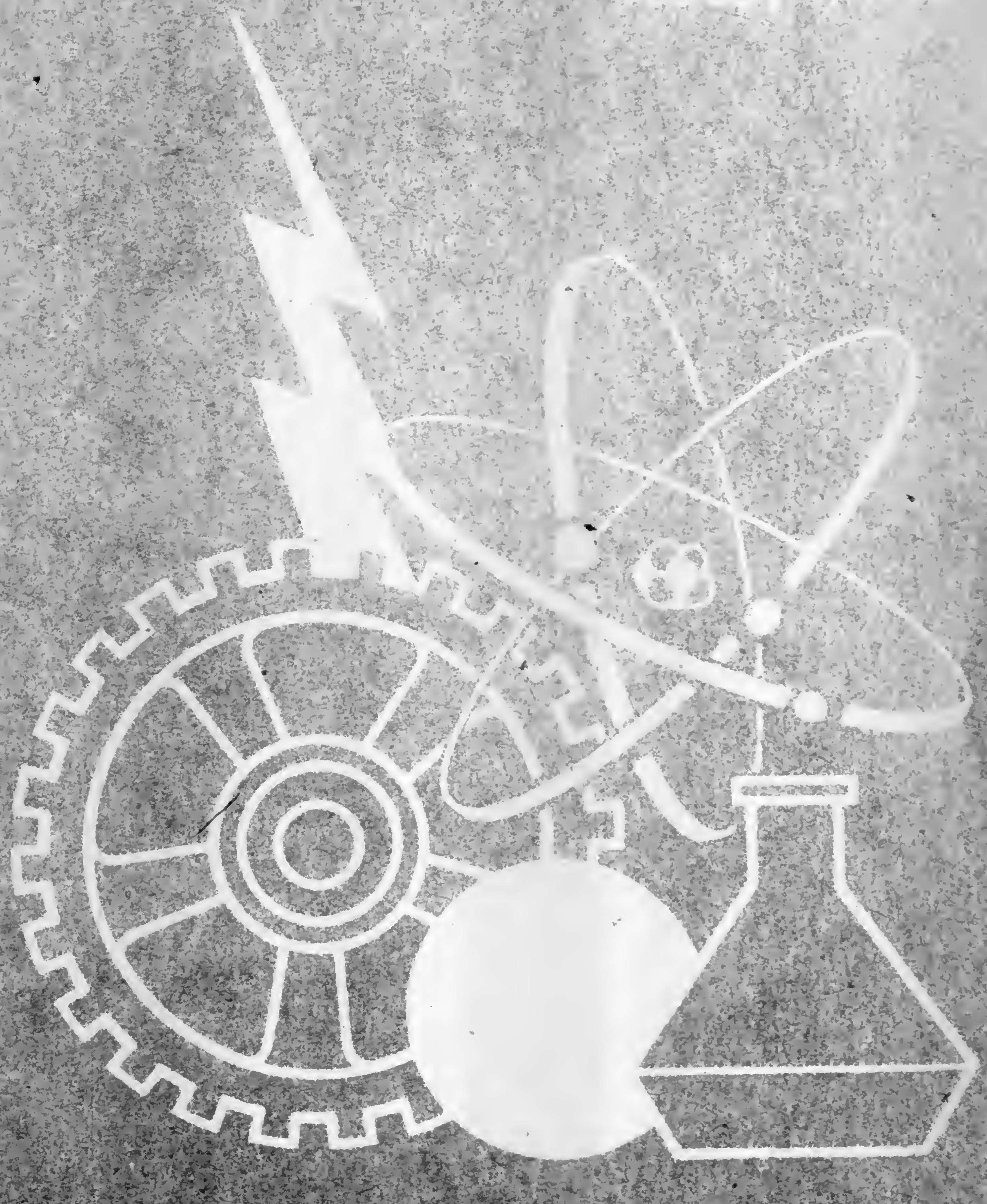

U.S.
DEPARTMENT
OF COMMERCE

Patent
and
Trademark
Office

PUBLISHED WEEKLY BY AUTHORITY OF CONGRESS

OFFICIAL GAZETTE of the UNITED STATES PATENT AND TRADEMARK OFFICE

February 1, 1983 Volume 1027 Number 1

CONTENTS

The following are mailed under direction of the Superintendent of Documents, Government Printing Office, Washington, D.C., 20402, to whom all subscriptions should be made payable and all communications addressed:

THE OFFICIAL GAZETTE (PATENT SECTION), issued weekly.

THE OFFICIAL GAZETTE (TRADEMARK SECTION), issued weekly.

GENERAL INFORMATION concerning PATENTS.

GENERAL INFORMATION concerning TRADEMARKS.

PRINTED COPIES OF PATENTS are furnished by the Patent and Trademark Office at $1.00 each; PLANT PATENTS in color, $8.00 each; copies of TRADEMARKS at $1.00 each. Address orders to the Commissioner of Patents and Trademarks, Washington, D.C., 20231.

Printing authorized by Section 11(a)3 of Title 35, U.S. Code P.T.O.

PATENT AND TRADEMARK OFFICE NOTICES

Patent Cooperation Treaty Information

For information concerning the PCT member countries see the notice appearing in the Official Gazette at 1017 O.G. 10 on Apr. 13, 1982. For use of the European Patent Office as a Searching Authority for PCT applications filed in the United States, see the notice in the Official Gazette of Sept. 28, 1982 at 1022 O.G. 52.

Note that the domestic PCT fees have been increased as of Oct. 1, 1982 by a rule change to 37 CFR 1.445 that was published at 1021 O.G. 11 on Aug. 10, 1982. Also note that the international PCT fees have changed as of Jan. 1, 1983 and the Search Fee for the European Patent Office as Searching Authority changed as of Jan. 22, 1983. The notice regarding the change in international fees and the Search Fee for the European Patent Office appeared at 1025 O.G. 27, on 28 Dec. 1982. The current schedule of fees is as follows:

Transmittal fee	$ 125.00
Search fee	
U.S. Patent and Trademark Office as Searching Authority	
· No corresponding prior U.S. national application filed	500.00
· Corresponding prior U.S. national application filed	250.00
European Patent Office as Searching Authority	
· All cases	670.00
International Fees	
Basic Fees (first 30 pages)	265.00
Basic Supplemental Fee (for each page over 30)	5.00
Designation fee (for each national or regional office)	65.00

GERALD J. MOSSINGHOFF,
Dec. 3, 1982. *Commissioner of Patents and Trademarks.*

Board of Appeals Decisions Rendered in the Month of Dec. 1982

Affirmed	139
Affirmed in part	12
Reversed	48
Total	199

REISSUE APPLICATIONS FILED

Notice under 37 CFR 1.11(b). The reissue applications listed below are open to inspection by the general public in the indicated Examining Groups and copies may be obtained by paying the fee therefor (37 CFR 1.21(b)).

3,253,103, Re. S.N. 363,241, Filed Mar. 29, 1982, Cl. 337/161, PROTECTOR FOR ELECTRIC CIRCUITS, Aloysius J. Fister, Owner of Record: *McGraw-Edison Co., Elgin, Ill.,* Attorney or Agent: Rey Eilers, et al., Ex. Gp.: 212

3,814,730, Re. S.N. 372,816, Filed Apr. 28, 1982, Cl. 528/15, PLATINUM COMPLEXES OF UNSATURATED SILOXANES AND PLATINUM CONTAINING ORGANOPOLYSILOXANES, Bruce D. Karstedt, Owner of Record: *General Electric Co., New York, N.Y.,* Attorney or Agent: Edward A. Hedman, Ex. Gp.: 142

3,829,933, Re. S.N. 402,712, Filed July 28, 1982, Cl. 17/053, METHOD AND APPARATUS FOR EVISCERATING SCALLOPS, William R. Lambert, Owner of Record: *Inventor,* Attorney or Agent: Davis Rabin, Ex. Gp.: 322

3,971,747, Re. S.N. 423,752, Filed Sept. 27, 1982, Cl. 260/375B, CURABLE COMPOSITIONS, Howard M. Bank, et al., Owner of Record: *Dow Corning Corp., Midland, Mich.,* Attorney or Agent: Harry D. Dingman, Ex. Gp.: 142

4,043,318, Re. S.N. 396,573, Filed July 9, 1982, Cl. 126/442, SOLAR ENERGY COLLECTOR, Yu K. Pei, Owner of Record: *Owens-Illinois, Inc., Toledo, Ohio,* Attorney or Agent: John R. Nelson, Ex. Gp.: 345

4,117,340, Re. S.N. 395,853, Filed July 6, 1982, Cl. 250/492.A, ELECTRON BEAM EXPOSURE SYSTEM, Eiichi Goto, et al., Owner of Record: *Rikagaku Kenkyusho, Saitamaken, Japan and Nihon Denshi Kabushiki Kaisha, Tokyo, Japan,* Attorney or Agent: David C. Hanson, et al., Ex. Gp.: 256

4,185,233, Re. S.N. 440,107, Filed Nov. 8, 1982, Cl. 315/276, HIGH EFFICIENCY BALLAST SYSTEM FOR GASEOUS DISCHARGE LAMPS, David H. Riesland, et al., Owner of Record: *General Electric Co., Schenectady, N.Y.,* Attorney or Agent: Norman C. Fulmer, et al., Ex. Gp.: 256

4,235,789, Re. S.N. 436,234, Filed Oct. 25, 1982, Cl. 260/380, PROCESS FOR THE PREPARATION OF 1-AMINO-2-BROMO-4-HYDROXYANTHRAQUINONE, James Robert Stout, Owner of Record: *Mobay Chemical Corp., West Pittsburgh, Pa.,* Attorney or Agent: Arnold Sprung, et al., Ex. Gp.: 117

4,285,234, Re. S.N. 435,992, Filed Oct. 21, 1982, Cl. 73/862.5, LOAD-MEASURING DEVICES, Dennis H. Sansome, et al., Owner of Record: *National Research Development Corp., London, England,* Attorney or Agent: Paul N. Kokulis, et al., Ex. Gp.: 244

REQUESTS FOR REEXAMINATION FILED

Notice under 37 CFR 1.11(c). The requests for reexamination listed below are open to inspection by the general public in the indicated Examining Groups. Copies of the requests and related papers may be obtained by paying the fee therefor established in the Rules (37 CFR 1.21(b)).

In the event correspondence to the patent owner is not received, this notice will be considered to be constructive notice to the patent owner and reexamination will proceed (37 CFR 1.248(a)(5) and 1.525(b)).

3,869,362, Reexam. No. 90/000,309, Requested: Dec. 21, 1982, Cl. 204/157.1R, PROCESS FOR REMOVING NOXIOUS GAS POLLUTANTS FROM EFFLUENT GASES BY IRRADIATION, Sueo Machi, et al., Owner of Record: *Requester,* Attorney or Agent: Hall, Myers & Rose, Ex. Gp.: 112, Requester: Ebara Corp. and Japan Atomic Energy Research Institute, Ota-Ku, Tokyo 144, Japan

3,942,969, Reexam. No. 90/000,305, Requested: Dec. 13, 1982, Cl. 71/5, DELAYED RELEASE NUTRIENTS FOR MUSHROOM CULTURE, Alban David Carroll, Jr., et al., Owner of Record: *Requester,* Attorney or Agent: Hume, Clement, et al., Ex. Gp.: 173, Requester: Research Corp., New York, N.Y.

4,004,995, Reexam. No. 90/000,308, Requested: Dec. 21, 1982, Cl. 204/157.1H, PROCESS FOR REMOVING NITROGEN OXIDES AND SULFUR DIOXIDE FROM EFFLUENT GASES, Sueo Machi, et al., Owner of Record: *Ebara Corp., Japan Atomic Energy Research Institute, Tokyo, Japan,* Attorney or Agent: Howard L. Rose, Ex. Gp.: 110, Requester: Owner

4,074,990, Reexam. No. 90/000,311, Requested: Dec. 27, 1982, Cl. 65/27, METHOD OF PREPARING COLEMANITE-CONTAINING GLASS BATCH, Stanley F. Brzozowski, et al., Owner of Record: *PPG Industries, Inc., Pittsburgh, Pa.,* Attorney or Agent: John E. Curley, Ex. Gp.: 170, Requester: Owner

4,134,769, Reexam. No. 90/000,306, Requested: Dec. 10, 1982, Cl. 430/300, OFFSET PRINTING PLATE, Akio Yoshida, et al., Owner of Record: *Mitsubishi Paper Mills, Ltd., Tokyo, Japan,* Attorney or Agent: Cushman, Darby & Cushman, Ex. Gp.: 160, Requester: Owner

4,319,365, Reexam. No. 90/000,310, Requested: Dec. 23, 1982, Cl. 4/236, NO TOOL TOILET SEAT HARDWARE, Richard A. Bemis, et al., Owner of Record: *Bemis Mfg. Co., Sheboygan Falls, Wis.* Attorney or Agent: Gerson E. Meyers, Ex. Gp.: 240, Requester: William H. Francis, Detroit, Mich.

National Inventors Day

The Patent and Trademark Office and the National Council of Patent Law Associations will sponsor National Inventors Day in the Public Search Room on Saturday, Feb. 12, 1983, from 1:00 p.m. to 5:00 p.m. and Sunday, Feb. 13, 1983, from 10:00 a.m. to 5:00 p.m. The public is invited to view the exhibits on these days.

In order to assemble the exhibits it will be necessary to close the Search Room on Friday, Feb. 11, 1983, at 5:00 p.m. The removal of all personal property from the Search Room by the early closing time would be appreciated.

GERALD J. MOSSINGHOFF,
Nov. 12, 1982. *Commissioner of Patents and Trademarks.*

Registration to Practice

The following list contains the names of persons applying for registration to practice before the United States Patent and Trademark Office. Information tending to affect the eligibility of any of said applicants on moral, ethical, or other grounds, should be furnished the Commissioner of Patents and Trademarks on or before Mar. 11, 1983:

DONALD J. QUIGG,
Jan. 5, 1983. *Chairman, Committee on Enrollment.*

A

Anderson, Gary M., Lyon & Lyon, 800 Wilshire Blvd., Los Angeles, Calif. 90017
Archer, Leith E., 1066 Sunnyvale-Saratoga Rd., #13, Sunnyvale, Calif. 94087

B

Badke, Bradford J., 1458-2 Forest Hill Rd., Staten Island, N.Y. 10004
Barry, Alan L., 1254 Arbor Vitae, Deerfield, Ill. 60015
Battle, Carl W., 3711 Stone Pl., Newark, Del. 19702
Belusko, Vincent J., 10746 Francis Pl., #142, Los Angeles, Calif. 90034
Bereveskos, Spiro, 7475 Mallard Ct., #D, Indianapolis, Ind. 46240
Bishop, Douglas S., 9759 Londolyn, Traverse City, Mich. 49684
Bond, Brian M., 3228 S. 15th St., Milwaukee, Wis. 53215
Breen, Bradford S., 333 E. 56th St., #5M, New York, N.Y. 10022
Buckles, Ellen J., 1060 Gest Dr., Mountain View, Calif. 94040
Buckley, Robert L., 5252 Beard Ave., S. Minneapolis, Minn. 55410
Bullitt, Richard S., 35 Honey Brook La., Gaithersburg, Md. 20760
Bullock, Donald E., 6109 39th Pl., Hyattsville, Md. 20781
Burke, Daniel P., 112 Ivy Dr., #4, Charlottesville, Va. 22901

C

Caracappa, David N., 23 University Dr., Mercerville, N.J. 08619
Carlin, Nicholas A., 11 1/2 Coleridge, San Francisco, Calif. 94110
Cartiglia, James R., 37 Deerpath La., Syosset, N.Y. 11791
Chadurjian, Mark F., 3324 Buchanan St., #202, Mt. Rainier, Md. 20712
Chojnowski, Edmund F., P.O. Box 524, S. Lancaster, Mass. 01561
Chow, Y. Ping, 142 W. Dana St., #E, Mountain View, Calif. 94041
Cook, Dennis L., 27 Hickam La., Bedford, Mass. 01730
Cooke, David P., 160 Blackburn Rd., Summit, N.J. 07901
Corneglio, Donald L., Jr., 2432 Eastlawn Ave., Akron, Ohio 44305
Coruzzi, Laura A., 409 E. 74th St., #4D, New York, N.Y. 10017
Craig, Frances P., 370 Old Maple St., Danvers, Mass. 01923
Crary, Byron R., 4512 N. Saginaw Rd., #1111C, Midland, Mich. 48640
Crook, John A., III, 1452 N. Elmhurst Rd., #203C, Mt. Prospect, Ill. 60056

D

Davis, William J., 3702 Gunston Rd., Alexandria, Va. 22302
Dillard, David A., 23420 Robinbrook Pl., Diamond Bar, Calif. 91765
Dossas, Vasilios D., 3025 N. Laramie, Chicago, Ill. 60641
Drew, Michael V., 3568-E Clubhouse Cir. E., Decatur, Ga. 30332

E

English, Woodie D. III, 1309 Q Nimitz, Ridgecrest, Calif. 93999
Epple, Donald G., 1133 Mary La., Naperville, Ill. 60540
Eriksen, Finn A., 69 Watkins Ave., Atherton, Calif. 94025
Esatto, Paul J., Jr., 78-19 64th Pl., Glendale, N.Y. 11386

F

Falkoff, Michael I., 19 Oliver St., Watertown, Mass. 02172
Fenton, Kevin P., 8306 Dundee Terr., Miami Lakes, Fla. 33016
Fladung, Richard D., 5002 W. 96th Terr., Overland Park, Kans. 66207
Flash, Hensley M., 112 Lawn Ave., Stamford, Conn. 06902
Flaynik, Donald G., Jr., 712 Laura St., Joliet, Ill. 60436
Forrest, Bradley A., 8465 Hiawatha, Eden Prairie, Minn. 55344
Fountain, Ryan M., 9004 Riggs Rd., Adelphi, Md. 20783
Firskney, Stephen H., 4158 Brookfield Dr., Cincinnati, Ohio 45245

G

Gerofsky, James, 18 Rose St., E. Rutherford, N.J. 07073
Gilbert, Douglas J., 107-40 Queens Blvd., Forest Hills, N.Y. 11375
Glady, Edward R., Jr., 209 F St., N.E., Washington, D.C. 20002
Glass, Roger P., 6404 16th St., Alexandria, Va. 22307

Goldman, Ricky S., 2706 Parkway Pl., Cheverly, Md. 20785
Gordon, Jennifer, 61 W. 62nd St., #8C, New York, N.Y. 10023
Grandinetti, Paul, 161 Scottsbury Ct., Gahanna, Ohio 43230
Griffin, Edward P., Jr., 19 Lohli Dr., Hamilton Sq., N.J. 08690
Grossman, Barry L., 212 S. Roual St., Alexandria, Va. 22314

H

Hahn, Thomas S., 1130 N. Pitt St., Alexandria, Va. 22314
Haynes, Mark A., 4227 San Felipe, #31, Houston, Tex. 77027
Hemminger, Steven D., 9172 Lemon Ave., Alta Loma, Calif. 91701
Hendrickson, John S., 175 Ridgeway Dr., Bridgeport, W. Va. 26330
Hite, William J., III, Rte. 11, Box 479, Maryville, Tenn. 37801
Hoffman, Bernard S., 1375 E. 101st St., Brooklyn, N.Y. 11236
Hollaway, Jerrell P., 1014 Meadowbrook Rd., Palm Bay, Fla. 32905
Holloway, Eugene C. III, 25 Spring St., Avon, N.Y. 14414
Howard, Bernard L., 11009 S. Oke St., Phoenix, Ariz. 85044
Howlett, Margaret R., 12903 Atlantic Ave., Rockville, Md. 20851
Hughes, Carl D., Jr., 8565 Park La., #408, Dallas, Tex. 75231

I

Ingman, John F., 3470 Onyx St., Eugene, Ore. 97405

J

Jackson, Christopher D., 1701 E. 12th St., #18X, Cleveland, Ohio 44114
Jacobi, John A., 811 Maranon, Houston, Tex. 77090
Janofsky, Eric B., 220-55 46th Ave., Bayside, N.Y. 11361
Jeanette, Henry C., 17627 Sharpsburg Ave., Baton Rouge, La. 70816
Jenkins, Thomas H., 30 Lincoln Plz. - 25E, New York, N.Y. 10023
Jodziewicz, Matthew F., 1504 F Berkeley St., Santa Monica, Calif. 90404
Johnston, Douglas E., 250 S. Whiting, #1004, Alexandria, Va. 22304
Johnston, Ralph A., 31 March La., Westbury, N.Y. 11590
Jones, Wayne A., 61 W. 62nd, #22F, New York, N.Y. 10023

K

Kahm, Steven E., 3901 S. Cedar Lake Rd., Minneapolis, Minn. 55416
Kelley, Scott W., 1999 N. University Ave., #29, Provo, Utah 84604
Kilyk, John, Jr., 1218 N. Rolfe St., #1, Arlington, Va. 22209
Kit, Gordon, 3420 39th St., N.W., Washington, D.C. 20016
Koslover, Monty, 145 Via Monte Doro, Redondo Beach, Calif. 90277
Kuczma, Linda A., 4510 N. Meade, Chicago, Ill. 60630

L

Lafontaine, Earl J., 6338 Barrie, Dearborn, Mich. 48126
LaHaye, Daniel N., 10317 Stewart Pl., River Ridge, La. 70123
Laska, Casimir F., 6425 Westheimer, #415, Houston, Tex. 77057
Lauder, Leona L., Stauffer Chemical Co., 1200 S. 47th St., Emeryville, Calif. 94804
Lavin, Lawrence M., Jr., 1609B S. Hayes St., Arlington, Va. 22202
Lebovici, Victor B., 29 Farmington Rd., W. Newton, Mass. 02165
Lee, Peter Y., 2300 Walnut St., #604, Philadelphia, Pa. 19107
Levine, Seymour, 5515 N. Virginia Ave., Chicago, Ill. 60625
Lewis, Leonard W., 1529 P St., N.W., #3, Washington, D.C. 20005
Lewry, Thomas A., 600 W. Diversey, Chicago, Ill. 60614
Lindgren, Thomas B., 950 Cottonwood La., Bartlett, Ill. 60103
Lisa, Steven G., 3500 N. Hayden Rd., #1104, Scottsdale, Ariz. 85251
Litman, Richard C., 1515 S. Jeff David Hwy., #1210, Arlington, Va. 22202
Lovingood, Katherine P., 2242 Knollcrest La., Knoxville, Tenn. 37920
Lukin, Mitchell D., 11707 Meadowtrail La., Stafford, Tex. 77477
Lukoff, David M., 1510 Turkey Run Rd., Weldin Farms, Wilmington, Del. 19801
Lukoff, Stanley, 1023 Parkside Dr., Wilmington, Del. 19803
Lynch, Michael L., 9550 Ella Lee, #2180, Houston, Tex. 77003

M

Marinangeli, Michael G., 331 E. 82nd St., New York, N.Y. 10028
Martinez, Janet K., 1081 Filbert St., San Francisco, Calif. 94104
Mazza, Michael J., 2431 Johnson Pl., Santa Clara, Calif. 95050
McCann, Philip P., 3454 Antomy La., Broadview Hgts., Ohio 44147
McLellan, Scott W., 212 Newman St., Metuchen, N.J. 08840
Meredith, Roy D., 1020 G St., S.E., Washington, D.C. 20003
Michelson, Carole A., 642 Morningside Dr., Naperville, Ill. 60566
Miller, Jerry A., 7823 N.W. 67th Ave., Tamarac, Fla. 33319
Montgomery, Mark A., 5523 Sideburn Rd., Fairfax, Va. 22032
Moore, Charles E., 55 Beechtree La., Granville, Ohio 43023
Moran, John C., 96 Hillcrest, Glen Ellyn, Ill. 60137
Moran, John P., 10601 Montrose Ave., #4, Bethesda, Md. 20814
Morgenstern, Dennis M., 203 Gotham La., Monroeville, Pa. 15146
Morris, Jules J., 576 Washington St., Brookline, Mass. 02146
Moss, Theodore, 611 Embree Crescent, Westfield, N.J. 07090
Motsinger, F. John Jr., 5-1 Edgewood Pl., River Forest, Ill. 60305
Mottier, Charles H., 2226 Sherman Ave., #B-2, Evanston, Ill. 60201
Muccio, Daniel J., 738 Calhoun Ave., Bronx, N.Y. 10465

N

Nahrwold, John C., 1321 1/2 Estes Ave., Chicago, Ill. 60626
Nemazi, John E., 3660 Carmel, Troy, Mich. 48084
Newitt, Edward J., Box 151, RD 3, Chadds Ford, Pa. 17317
Nimmo, Anthony, 6453 Riverview Dr., Indianapolis, Ind. 46220
Nisonoff, Mitchell B., 337 W. 20th St., #2A, New York, N.Y. 10011
Noonan, William D., Keaty & Keaty, 1818 ITM Tower, 2 Canal St., New Orleans, La. 70130

O

O'Brien, Margaret M., 830 Hinman, Evanston, Ill. 60202

Ockert, Karl F., 704 Roberts Rd., Ambler, Pa. 19002
Ogrod, Gregory D., 8466 Wicklow La., Dublin, Calif. 94568
Oki, John S., 77 Bleecker St., #811, New York, N.Y. 10012
Olson, Jeffrey M., 2700 N. Cahuenga Blvd., E., #4316, Los Angeles, Calif. 90068
O'Shea, Patrick J., 1051 S. Fairview Ave., Lombard, Ill. 60148
Owings, Daniel H., 713 Locust Corner Rd., Cincinnati, Ohio 45245

P

Pandiscio, Mark J., 241 Perkins St., Unit J-202, Boston, Mass. 02130
Partlow, David L., 838 E. Orange St., Lakeland, Fla. 33801
Patula, Timothy T., 608 Union St., Valparaiso, Ind. 46383
Paul, Debra L., 4771 Forest Edge Dr., Cleveland, Ohio 44144
Paulius, Thomas D., 12745 S. McVickers Ave., Palos Hgts., Ill. 60463
Paulson, Mark G., 75 W. Parish Rd., Westport, Conn. 06880
Pennington, Joan, 2140B Rugen Rd., Glenview, Ill. 60025
Petit, Michael G., 238 Purdue Ave., Berkeley, Calif. 94708
Petrow, Joel R., 1177 Harvard Rd., Monroeville, Pa. 15146
Prieto, Joe R., 806 1/2 E. Carpenter, Midland, Mich. 48640

R

Rasser, Jacobus C., 10710 Bridlepath La., Cincinnati, Ohio 45241
Rezek, Richard A., 1152-703 N. Whiteriver Pkwy., Indianapolis, Ind. 46222
Roche, David I., 7342 N. Hoyne Ave., Chicago, Ill. 60645
Roock, Daniel J., 216 Patricia Dr., N. Syracuse, N.Y. 13212
Rosenblatt, Steve, 2231 Albans St., Houston, Tex. 77005
Rowland, William C., 125 Windsor Ave., Watertown, Mass. 02172
Ryan, Matthew K., 20452 Knightsbridge Rd., Excelsior, Minn. 55331

S

Sawyer, Joseph A. Jr., 228 Emerson Ave., Plainfield, N.J. 07062
Schmidt, Robert N., 1721 Fulton Rd., Cleveland, Ohio 44113
Schnurr, Richard A., 8050 Kilpatrick, Apt. 4-G, Skokie, Ill. 60076
Shape, Steven M., 2646 Bob-O-Link La., Northbrook, Ill. 60062
Sherman, Ronni L., 2800 Jeanetta, #2406, Houston, Tex. 77063
Siminerio, Andrew C., 9458 Doral Dr., Pittsburgh, Pa. 15237
Snyder, Troxell K., 65 Edgewood Dr., South Windsor, Conn. 06074
Sobieraj, James R., 1936 N. Clark, #418, Chicago, Ill. 60614
Speidel, Robert J., 5 Laurelwood Rd., New Hartford, N.Y. 13413
Steinhardt, Paul C., 4857 Hawthorne Way, Plainfield, Ind. 46168
Sundeen, Marcia H., 1045 N. Stafford St., Arlington, Va. 22201

T

Takeuchi, Yusuke R., 301 W. 13th St., New York, N.Y. 10014
Thesing, James D., 330 Division St., Bellevue, Ky. 41073
Tognino, Alexander, R.D. #7 Worthington Dr., E., Carmel, N.Y. 10512
Tokos, Thomas C., 1701 Sanford Rd., Silver Spring, Md. 20902
Tolomei, John G., 675 Berwick Pl., Roselle, Ill. 60172

U

Ulrich, Werner, 434 Maple St., Glen Ellyn, Ill. 60137
Usher, Robert W. J., 650 S. 80th, Harrisburg, Pa. 17111

V

Vary, Michael W., 200 E. Randolph Dr., Chicago, Ill. 60601
Veal, Robert J., 3627 Bobolink La., Orlando, Fla. 32803
Vidas, Scott Q., 859 Bluebill Dr., Mendota Hgts., Minn. 55120

W

Ward, Calvin B., 9580 Crow Canyon Rd., Castro Valley, Calif. 94546
Warmbold, David A., 7307 Cannock, Houston, Tex. 77074
Warren, Raymond J., 914 S. Flood, Norman, Okla. 73069
Warsh, Kenneth L., 6313 Sandy St., Laurel, Md. 20707
Weiss, Sandra B., 228-0 S. Maple, Oak Park, Ill. 60302
Welch, Edward K. II, 927 E St., N.E., Washington, D.C. 20002
Weller, Walter T., 5406 Theall Rd., Houston, Tex. 77066
Westerby, David A., 2496 Falcon Way, Sandy, Utah 84092
Williams, Gregory D., 255 1/2 Fulton St., Philadelphia, Pa. 19147
Williams, James M., 533 Swanson Dr., Thornwood, N.Y. 10594
Williamson, George L., 108 Black Oak Way, Daphne, Ala. 36526
Wisser, Scott A., 1919 17th St., N.W., #1, Washington, D.C. 20009
Wollman, Penina P., 11 Riverside Dr., New York, N.Y. 10023

Y

Yuckman, David A., 28 Fieldstone Dr., Springfield, N.J. 07081
Yusko, David P., 5568 Candlewood Ct., Parma, Ohio 44134

National Technical Information Service

U.S. GOVERNMENT-OWNED INVENTIONS

Notice of Availability for Licensing

The inventions listed below are owned by agencies of the U.S. Government and are available for licensing in the U.S. in accordance with 35 U.S.C. 207 to achieve expeditious commercialization of results of federally funded research and development. Foreign patents are filed on selected inventions to extend market coverage for U.S. companies and may also be available for licensing.

Technical and licensing information on specific inventions may be obtained by writing to:

Office of Government Inventions and Patents
U.S. Department of Commerce
P.O. Box 1423
Springfield, Va. 22151

Please cite the number and title of inventions of interest.

DOUGLAS J. CAMPION,
Program Coordinator,
Office of Government Inventions and Patents
National Technical Information Service
U.S. Department of Commerce.

6-293,027. REMOVAL OF SUSPENDED SOLIDS FROM WATER. Department of Interior.

6-316,259. APPARATUS FOR CONTROLLING THE LEVEL OF FLUID IN A TANK. Department of the Interior.

6–318,710. REMOVAL OF HEAVY METALS FROM WATER. Department of Interior.

6–325,269. REMOVAL OF HEAVY METALS FROM WATER. Department of Interior.

6–327,539. HIGH TEMPERATURE HYDROLYSIS OF ALUMINUM SULFATE SOLUTION. Department of Interior.

6–327,544. RECOVERY OF GALLIUM FROM ACID PROCESS SOLUTIONS. Department of Interior.

6–259,349. COMPOSITE MEMBRANE FOR REVERSE OSMOSIS. Department of Interior.

6–299,439. RECOVERY OF METALS FROM GEOTHERMAL BRINE. Department of Interior.

6–310,583. TREATMENT OF SUPERALLOYS FOR RECOVERY OF METAL VALUES. Department of Interior.

6–324,174. METHOD AND APPARATUS FOR DETERMINING THE PETROLEUM CONTENT IN A ROCK MASS TO DETERMINE THE METHANE GAS CONTENT OF THE ROCK MASS. Department of Interior.

6–324,759. OXYGEN INJECTION IN REVERSE OSMOSIS DESALINATION. Department of Interior.

6–340,925. PRODUCTION OF METAL POWDER. Department of Interior.

6–348,117. RECOVERY OF POTASSIUM FROM ORES. Department of Interior.

6–376,851. SUSPENDED SEDIMENT SENSOR. Department of Interior.

6–383,060. CONCENTRATING AND RECLAIMING MAGNETIC FLUIDS. Department of Interior.

6–352,662. ENCAPSULATION BY ENTRAPMENT WITHIN POLYHYDROXY POLYMER BORATES. Department of Agriculture.

6–391,315. LIQUID-LIQUID EXTRACTION OF COBALT. Department of Interior.

6–391,316. APPARATUS FOR THE EFFICIENT MIXING OF LIQUIDS AND GASES. Department of Interior.

6–396,924. DESULFURIZATION OF CARBONACEOUS MATERIALS. Department of Interior.

6–397,735. RECOVERY OF TUNGSTEN FROM BRINES. Department of Interior.

6–401,994. APPARATUS FOR SUPPORTING A PLURALITY OF SEISMOMETERS. Department of Interior.

6–411,155. METHOD FOR SEPARATION OF HIGH-COPPER AND LOW-COPPER ALUMINUM-SILICON ALLOYS. Department of Interior.

6–416,191. REMOVAL OF ARSENIC FROM AQUEOUS SOLUTIONS. Department of Interior.

6–416,192. METHOD OF ENHANCING THE REMOVAL OF METHANE GAS AND ASSOCIATED FLUIDS FROM MINE BOREHOLES. Department of Interior.

6–423,402. MICROEMULSIONS FROM VEGETABLE OIL AND AQUEOUS ALCOHOL WITH 1-BUTANOL SURFACTANT AS ALTERNATIVE FUEL FOR DIESEL ENGINES. Department of Agriculture.

6–427,229. MICROEMULSIONS FROM VEGETABLE OIL AND AQUEOUS ALCOHOL WITH TRIALKYLAMINE SURFACANT AS ALTERNATIVE FUEL FOR DIESEL ENGINES. Department of Agriculture.

6–366,754. METHOD AND APPARATUS FOR EDGEWISE COMPRESSION TESTING OF FLAT SHEETS. Department of Agriculture.

6–345,512. SALT-TOLERANT MICROBIAL XANTHANASE AND METHOD OF PRODUCING SAME. Department of Agriculture.

6–352,426. PROCESS FOR THE DECOLORIZATION OF PULP MILL BLEACH PLANT EFFLUENT. Department of Agriculture.

6–375,553. LYSIS OF TRYPANOSOMA CRUZI. Department of Health & Human Services.

6–407,232. IMPLANTATION DEVICE FOR USE IN VIVO STIMULATION AND COLLECTION OF MONOCYTES FROM PERITONEUM OF VERTERBRATE. Department of Agriculture.

6–396,521. APPARATUS TO REGULATE DISPENSING OF AGRICULTURAL CHEMICALS BY ROPE WICK APPLICATORS. Department of Agriculture.

6–314,323. ALTERED BRINING PROPERTIES OF PRODUCE BY A METHOD OF PRE-BRINING EXPOSURE OF THE FRESH PRODUCE TO OXYGEN OR CARBON DIOXIDE. Department of Agriculture.

6–356,870. CONTROL OF SICKLEPOD, SHOWY CROTALARIA, AND COFFEE SENNA WITH A FUNGAL PATHOGEN. Department of Agriculture.

6–356,864. CONTROL OF PRICKLY SIDA, VELVETLEAF, AND SPURRED ANODA WITH FUNGAL PATHOGENS. Department of Agriculture.

6–378,317. ROPE WICK CHEMICAL RECOVERY APPARATUS. Department of Agriculture.

6–385,204. A PROCESS FOR PRODUCING DURABLE PRESS FABRICS THROUGH PHOSPHORYLATION. Department of Agriculture.

6–385,163. A METHOD FOR SEPARATING CLOSED BOLLS OF COTTON BY MATURITY. Department of Agriculture.

6–377,509. CONTROL OF MYCOTOXIN PRODUCTION BY CHEMICALLY AFFECTING FUNGAL GROWTH. Department of Agriculture.

6–251,404. (4,358,160) AIR DIVERSION AND DUST CONTROL SYSTEM FOR LONGWALL SHEARERS. Department of Interior.

6–258,483. (4,359,534) CONVERSION OF D-XYLOSE TO ETHANOL BY THE YEAST PACHYSOLEN TANNOPHILUS. Department of Agriculture.

Adverse Decisions in Interference

In the designated interference involving the indicated claims of the following patents, final decisions having been rendered that the respective patentees were not the first inventors with respect to the claims listed.

Patent No. 3,326,731, George A. Noddin, DETONATING EXPLOSIVE IN POLYTETRAFLUOROETHYLENE MATRIX AND PREPARATION, Interference No. 100,877, decided Nov. 2, 1982, claims 1, 2, 6 & 7.

Patent No. 3,455,749, Robert S. Gow, PARTICULATE EXPLOSIVE COATED WITH DISCRETE PARTICLES OF POLYTETRAFLUOROETHYLENE, Interference No. 100,878, decided Nov. 5, 1982, claims 1 & 6.

Patent No. 3,888,804, Carl E. Swanholm and Robert G. Caldwell, PHOTODEGRADABLE HYDROCARBON POLYMERS, Interference No. 100,943, decided Nov.17, 1982, claims 2, 5, & 6.

Patent No. 3,909,301, Raymond L. Schenk, Jr., POSITIVE DISPLACEMENT BONDING, Interference No. 99,525, decided June 30, 1981, claim 19.

Patent No. 4,004,031, Jozef Drabek, BIS-(0-1-ALKYLTHIO-ETHYLIMINO)-N-METHYL-CARBAMIC ACID)-N,N'-SULPHIDE INSECTICIDES, Interference No. 99,758, decided Aug. 20, 1981, claims 1–3, 5–7 & 9–12.

Patent No. 4,010,146, David D. Russell and George Shkapenko, POLYOL BLENDS AND POLYURETHANE PREPARED THEREFROM, Interference No. 100,832, decided Oct. 27, 1982, claims 1, 4, 5 & 7.

Patent No. 4,083,955, Robert J. Grabenstetter and John A. Gray, PROCESSES AND COMPOSITIONS FOR REMINERALIZATION OF DENTAL ENAMEL, Interference No. 100,348, decided Aug. 6, 1982, claims 1, 2, 5, 6, 8–12 & 15.

Patent No. 4,087,447, Paul W. Collins and Raphael Pappo, ANTI-SECRETORY PROSTAGLANDINS INTERMEDIATES, Interference No. 100,359, decided Aug. 5, 1982, claims 1 & 2.

Patent No. 4,093,999, Paul Fuller, John B. Gillender, Michael Shacklady and Samir Basu, ELECTRONIC FRANKING MACHINES, Interference No. 100,379, decided July 30, 1982, claims 1, 2, 3, 5, 12, 13 & 22.

Patent No. 4,233,935, Tsutomu Uehara, Toshihiko Oguchi, Tsutomu Kubo and Yukio Suzuki, MAGNETIC BRUSH APPARATUS FOR ELECTROSTATIC PRINTING SYSTEM, Interference No. 100,831, decided Oct. 8, 1982, claims 1–4 & 7.

Patent No. 4,233,975, Arthur J. Yerman, ANTI-DRUG ABUSE SINGLE-USE SYRINGE, Interference No. 100,696, decided Sept. 7, 1982, claim 1.

NANNIE B. HENRY,
Deputy Clerk,
Board of Patent Interferences.

PATENT NOTICES

Certificates of Correction for the Week of Feb. 1, 1983

3,917,508	4,331,672	4,348,378	4,357,106
3,950,230	4,333,279	4,349,053	4,357,166
3,971,652	4,333,453	4,349,412	4,357,304
4,094,013	4,334,885	4,349,558	4,357,564
4,115,752	4,335,131	4,349,559	4,357,569
4,200,573	4,335,569	4,349,819	4,357,681
4,210,717	4,335,573	4,349,977	4,357,953
4,215,891	4,335,757	4,350,008	4,358,095
4,218,962	4,337,211	4,350,454	4,358,122
4,273,195	4,337,266	4,350,523	4,358,279
4,277,938	4,338,446	4,350,787	4,358,546
4,287,255	4,341,613	4,350,812	4,358,726
4,299,800	4,342,106	4,350,845	4,359,138
4,304,270	4,343,064	4,351,027	4,359,291
4,306,197	4,343,343	4,351,266	4,360,229
4,308,199	4,344,896	4,351,656	4,360,295
4,314,795	4,345,592	4,352,194	4,360,399
4,317,827	4,346,146	4,352,316	4,360,540
4,318,393	4,346,287	4,352,623	4,360,690
4,318,756	4,346,476	4,353,192	4,360,699
4,321,131	4,346,516	4,354,151	4,360,827
4,321,923	4,346,740	4,354,183	4,360,927
4,322,422	4,346,986	4,354,228	4,360,984
4,328,325	4,347,152	4,354,735	4,361,230
4,329,599	4,347,398	4,354,810	4,361,318
4,329,914	4,347,578	4,354,916	4,361,688
4,330,473	4,347,617	4,354,958	4,362,219
4,330,553	4,347,830	4,355,764	4,362,798
4,331,671	4,348,193	4,356,452	4,363,078

DEPARTMENT OF COMMERCE
Patent and Trademark Office
37 CFR Parts 1 & 5
[Docket No. 21223-259]
Revision of Patent Procedure

AGENCY: Patent and Trademark Office, Commerce

ACTION: Final Rule.

SUMMARY: The Patent and Trademark Office is amending the rules of practice in patent cases, Part 1 of 37 CFR, to implement the sections of Public Law 97-247 of 1982 which become effective on February 27, 1983, and to make other miscellaneous changes. The other miscellaneous changes are being made to clarify and improve the rules where appropriate. The rulemaking also is amending Part 5 of 37 CFR to establish procedures for expediting the granting of a license under 35 U.S.C. 184 permitting the filing of a patent application in a foreign country.

EFFECTIVE DATE: February 27, 1983

FOR FURTHER INFORMATION CONTACT: R. Franklin Burnett by telephone at (703) 557-3054 or by mail marked to his attention and addressed to the Commissioner of Patents and Trademarks, Washington, D. C. 20231.

SUPPLEMENTARY INFORMATION: This rule change is designed primarily to 1) implement the changes in practice in the Patent and Trademark Office provided for in Public Law 97-247 enacted on August 27, 1982; 2) clarify or rewrite certain rules; and 3) expedite the granting of licenses under 35 U.S.C. 184.

This rule change contains a number of changes in practice designed to benefit both the Patent and Trademark Office in its handling of its mission and the public the Office serves.

Certain of the changes are housekeeping in nature.

A number of final rules have already been issued to implement Public Law 97-247. A final rule on "Revision of Patent and Trademark Fees" was published on July 30, 1982 at 47 FR 33086-33112 with corrections in the printing thereof being published on August 4, 1982, at 47 FR 33688 and on August 5, 1982, at 47 FR 33959. The final rule was also published in the Official Gazette on August 10, 1982, at 1021 O.G. 19-94. A final rule relating to definitions of "independent inventor" and "nonprofit organizations" was published on September 10, 1982 at 47 FR 40134-40140 and on September 21, 1982 at 1022 O.G. 29-46. A "Revision of Patent and Trademark Fees Confirmation" was published on September 17, 1982 at 47 FR 41272-41283 and on September 28, 1982 at 1022 O.G. 61-97. A final rule relating to the definition of "small business concern" was published on September 30, 1982 at 47 FR 43272-43276 and on October 19, 1982 at 1023 O.G. 23-29.

DISCUSSION OF SPECIFIC RULES AND SIGNIFICANT DIFFERENCES BETWEEN PROPOSED AND FINAL RULES:

Section 1.4

Section 1.4 is amended as proposed to add a reference to Subpart D relating to citation of prior art and reexamination.

Section 1.6

Section 1.6 is amended as proposed to insert "federal" before "holidays" in paragraphs 1.6(a)-(c) in accordance with §21(b) of Title 35, United States Code, as amended by Public Law 97-247. New paragraph 1.6(d) will establish in the regulations a procedure under which papers and fees which could not be filed on a particular date because of an interruption or emergency in the United States Postal Service which is so designated by the Commissioner, may be promptly filed after the ending of such a designated interruption or emergency and be considered as having been filed on that particular date. Authority for such a practice is found in §21(a) of Title 35, United States Code, as amended by Public Law 97-247.

Section 1.7

Section 1.7 is amended as proposed to insert "federal" before "holiday" in accordance with 35 U.S.C. 21(b), as amended by Public Law 97-247.

Section 1.8

Section 1.8 is amended to remove in paragraph 1.8(a) the references to §§3.55 and 4.23, which sections were removed from the rules by the rulemaking entitled "Revision of Patent and Trademark Fees" published in the Federal Register on September 10, 1982 at 47 Fed. Reg. 40134-40140. The change in paragraph 1.8(a)(i) results from the change made in §111 of Title 35, United States Code, by Public Law 97-247. Under the revised rule, the certificate of mailing procedure would be available for filing patent oaths or declarations and filing fees. However, the certificate of mailing procedure could not be used for filing patent specifications and drawings to obtain a filing date. Such papers can be filed under new §1.10. The final rule clarifies that each paper or fee filed under §1.8 must include its own certificate of mailing. The proposed amendment to §1.8(a)(viii) referring to the Court of Appeals for the Federal Circuit rather than to the Court of Customs and Patent Appeals, has been adopted as a final rule as published on October 26, 1982 at 47 FR 47380-47382 and therefore is not republished here.

Section 1.10

Section 1.10 is amended as proposed to provide a procedure for assigning the date on which any paper or fee is deposited as "Express Mail" with the United States Postal Service as the filing date of the paper or fee in the Patent and Trademark Office. Authority for the Commissioner to establish such a procedure is provided in §21(a) of Title 35, United States Code, as amended by Public Law 97-247 for any paper or fee required to be filed in the Patent and Trademark Office. This procedure covers the filing of all documents, including patent and

trademark applications, and fees since they are required to be filed in the Patent and Trademark Office for processing. Questions were raised during the public hearing and in the written comments regarding the authority of the Commissioner to promulgate §1.10 insofar as it would provide for the use of "Express Mail" to file patent and trademark applications. The argument advanced was that the amendment of 35 U.S.C. 21(a) by Public Law 97-247 did not permit the Commissioner to adopt rules whereby "Express Mail" could be used to file patent and trademark applications since such applications are not papers or fees "required to be filed in the Patent and Trademark Office." It was urged that this language of 35 U.S.C. 21(a), in conjunction with amended 35 U.S.C. 111 which states that the "filing date of an application shall be the date on which the specification and any required drawing are received in the Patent and Trademark Office," prevents adoption of proposed §1.10.

The arguments presented are not supported by the legislative history or by the literal language of the statute. Section 111 of Title 35, United States Code, before and after Public Law 97-247, requires patent applications to be made "in writing to the Commissioner." This is apparent from the first sentence of 35 U.S.C. 111 which provides that "[a]pplication for patent shall be made...in writing to the Commissioner." Thus, one seeking a patent is "required" to make application for the same "in writing to the Commissioner." The written application clearly constitutes a "paper or fee required to be filed in the Patent and Trademark Office." Section 21(a) of Title 35, United States Code, authorizes the Commissioner to adopt rules whereby "any paper or fee required to be filed in the Patent and Trademark Office will be considered filed in the Office on the date on which it was deposited with the United States Postal Service." The authority provided by section 21(a) extends to "any paper or fee" to which the Commissioner, by an appropriate rulemaking, so extends it. The Commissioner can, therefore, by rule, establish that "any paper or fee," including a patent or trademark application, is "filed" or "received in the Patent and Trademark Office" when it is deposited with the United States Postal Service. The terms "filed" and "received" as used in 35 U.S.C. 21(a) and 111 can therefore be given the same meaning by an appropriate rulemaking by the Commissioner.

The legislative history, H.R. Rep. No. 542, 97th Cong., 2nd Sess. 8A (1982), clearly supports the interpretation set forth herein. In discussing new subsection (a) which has been added to section 21 of Title 35, United States Code, the Report emphasizes that the authority extends to "any paper or fee which is required to be filed" in the Patent and Trademark Office. The Report specifically states that the "requirements governing whether any given paper or fee may be given the filing date of the day on which it was...deposited with the United States Postal Service will be set forth in regulations established by the Commissioner." Clearly no restrictions were placed by the statute or the legislative history on the types of papers or fees which the Commissioner can consider as having been filed in the Patent and Trademark Office on the date of deposit with the United States Postal Service.

The new procedure, in paragraph 1.10(a), requires the use of the "Express Mail Post Office to Addressee" service of the United States Postal Service. This service provides for the use of a mailing label on which the Post Office clearly indicates the date on which it was deposited. Paragraph 1.10(b) requires (1) that the number of the "Express Mail" mailing label be placed on each paper or fee and (2) that a certificate of mailing by "Express Mail", signed by the person mailing the paper or fee, be included on each paper or fee and state the date of deposit as "Express Mail" in the United States Postal Service. The requirement that each paper or fee have the number of the "Express Mail" mailing label and the certificate of mailing by "Express Mail" included thereon is necessary so that the Patent and Trademark Office can verify when each paper or fee was filed if questions relating thereto arise. The number and certificate must be placed on each separate paper and each fee transmittal either directly on the document or by a separate paper firmly and securely attached thereto. It is not necessary that the number and certificate be placed on each page of a particular paper or fee transmittal. Merely placing the number and certificate in one prominent location on each separate paper or fee transmittal will be sufficient.

Under new paragraph 1.10(c), the Office will accord the paper or fee the date of deposit as "Express Mail" as the filing date without further proof unless a question is present regarding the date of mailing. If, however, more than a reasonable time has elapsed between the certificate date and the Patent and Trademark Office receipt date, or if other questions regarding the date of mailing are present, new paragraph 1.10(c) provides that the person mailing the paper or fee may be required to file (1) a copy of the "Express Mail" receipt showing the actual date of mailing and (2) a statement from the person who mailed the paper or fee averring to the fact that the mailing occurred on the date certified. Such statement must be a verified statement (oath or declaration) unless made by a person registered to practice before the Patent and Trademark Office.

The certificate of mailing procedure of §1.8(a) continues to be available in addition to the proposed procedure under §1.10. The final rule (§1.10) has been changed from that proposed to allow for a reasonable time between mailing and delivery rather than only for one day since actual delivery in one day is not always provided from all areas of the country. The final rule clarifies that each paper or fee must include its own certificate of mailing by "Express Mail." This rule is being promulgated at this time so that individuals who desire to use the service may do so after the effective date.

The "Express Mail" service is seen to be preferable to other types of postal services because a readily legible mailing date is provided to both the applicant and the Patent and Trademark Office on the "Express Mail" label. Also, the labels are of uniform size and can therefore be kept on file relatively easily by the Office, if such is determined to be necessary or desirable. Registered mail and certified mail, on the other hand, provide only a postmark for the mailing date when such mail arrives in the Patent and Trademark Office and such postmarks are often illegible. Also, such mail arrives in various size envelopes which do not easily lend themselves to being filed so that the postmark may be retained. Administrative burdens including lack of certainty of mailing date and storage are considered greater for registered or certified mail than for "Express Mail." The Patent and Trademark Office will monitor closely the use of "Express Mail" by the public and may reconsider permitting the use of other forms of service provided by the United States Postal Service.

Section 1.17

Section 1.17, paragraph (h), is amended as proposed to remove the reference to §1.45 and add a reference to new §1.48 relating to the correction of inventorship in patent applications.

Section 1.22

Section 1.22 is amended to recognize that filing dates may be assigned without payment of the basic filing fee as authorized by §111 of Title 35, United States Code, as amended by Public Law 97-247. New paragraph 1.22(b) indicates that fees paid to the Office should be itemized in such a manner that the purpose for which the payment is submitted can be clearly determined by Office personnel for proper processing. The final rule includes clarification that it refers to patent and trademark fees and charges.

Section 1.24

Section 1.24 is amended as proposed to remove the reference to coupons in denominations of forty cents since coupons in this denomination are no longer necessary.

Section 1.41

Section 1.41 is amended as proposed to require in paragraph 1.41(a) that a patent be applied for in the name of the actual inventor or inventors and that the full names of the inventors be stated. Paragraph 1.41(b), as amended, clarifies the definition of the word "applicant". New paragraph 1.41(c) permits any person authorized by the applicant to file an application for patent in order to receive a filing date on behalf of the inventor or inventors, but the oath or declaration for the application must be made by all of the actual inventors in accordance with §§1.63 and 1.64. Under new paragraph 1.41(d), a showing may be required from the person initially filing an application that the filing was authorized.

Sections 1.42 and 1.43

Sections 1.42 and 1.43 are amended as proposed to remove the requirement that the legal representative sign the application papers in view of the changes in 35 U.S.C. 111, as amended by Public Law 97-247. The oath or declaration must still be signed. Several occurrences of the masculine gender in §1.42 have been removed.

Section 1.45

Section 1.45 is amended as proposed to remove present paragraphs 1.45(b) and (c) in view of new §1.48 and remove the requirement that joint inventors sign the application papers. The joint inventors are, however, still required to make the oath or declaration in accordance with new §§1.63 and 1.64.

Section 1.46

Section 1.46 is amended as proposed, with two commas being added for clarity, to permit anyone to file the application if authorized by the inventor or inventors or one of the persons mentioned in §§1.42, 1.43, or 1.47.

Section 1.47

Section 1.47 is amended as proposed to change the reference for the rule on oaths or declarations from §1.65 to §1.63.

Section 1.48

Section 1.48 adds a new section relating to correction of inventorship as authorized by §116 of Title 35, United States Code, as amended by Public Law 97-247. Under §1.48, if the correct inventor or inventors are not named in an application for patent, the application could be amended to name only the actual inventor or inventors so long as the error in the naming of the inventor or inventors occurred without any deceptive intention on the part of the actual inventor or inventors. Section 1.48 requires that the amendment be diligently made and be accompanied by (1) a petition including a statement of facts verified by the original named inventor or inventors establishing when the error without deceptive intention was discovered and how it occurred; (2) an oath or declaration by each actual inventor or inventors as required by §1.63; (3) the fee set forth in §1.17(h); and (4) the written consent of any assignee. Correction will be permitted, if diligently requested, in cases where the person originally named as inventor was in fact not the inventor of the subject matter contained in the application. If such error occurred without any deceptive intention on the part of the true inventor, the Office has the authority to substitute the true inventor for the erroneously named person. If deceptive intention was present on the part of other individuals substantively involved in the preparation or prosecution of the application their conduct will be considered and appropriate action taken under 37 CFR 1.56. Although probably rarer, instances such as changes from a mistakenly identified sole inventor to different, but actual, joint inventors; conversions from erroneously identified joint inventors to different but actual, joint inventors; and conversions from erroneously identified joint inventors to a different, but actual, sole inventor will also be permitted. In each instance, however, the Office will have to be assured of the presence of innocent error, without deceptive intention on the part of the true inventor or inventors, before permitting a substitution of a true inventor's name. The final rule language has been modified from that proposed to follow more precisely the language of the statute and the legislative history by permitting correction where the error occurred without any deceptive intention on the part of the actual inventor or inventors.

Section 1.51

Section 1.51 is amended to change the reference in paragraph (a)(2) to new §1.63 for the requirements of an oath or declaration and to change paragraph (b) with regard to the required time for filing information disclosure statements. The final rule has been modified from that proposed by eliminating the word "material" before the "information disclosure statement" and the title has been changed to substitute "a complete" for "an" to be more precise.

Section 1.52

Section 1.52 is amended as proposed to revise paragraph 1.52(c) relating to interlineations, erasures, cancellations or other alterations in application papers to specify that such changes must be made before the signing of any accompanying oath or declaration and should be dated and initialed or signed by the applicant on the same sheet of paper. Paragraph 1.52(c), as amended, prohibits making alterations in the application papers after the signing of an oath or declaration referring to such application papers. Under paragraph 1.52(c), as amended, amendments to application papers made after the signing of an oath or declaration referring to the application papers can only be made in the manner provided by §§1.121 and 1.123-1.125.

Section 1.53

Section 1.53 is amended to revise the title to indicate that the section, as amended, relates to application serial numbers, filing dates and completion of applications. Paragraph 1.53(a) indicates that a serial number is assigned to any filed application for identification purposes, even if the application is incomplete or informal. Paragraph 1.53(b) provides that a filing date is assigned to an application as of the date a specification containing a description and claim and any required drawing are filed in the Patent and Trademark Office. Although the filing fee and oath or declaration can be submitted later, no amendments can be made to the specification or drawings which will introduce new matter. This practice is authorized by 35 U.S.C. 111 as amended by Public Law 97-247. New paragraph 1.53(c) provides for notifying applicant of any application incomplete because the specification or drawing is missing and giving the applicant a time period to correct any omission. If the omission is not corrected within the time period given, the application will be returned or otherwise disposed of and a handling fee of $50.00 will be retained from any refund of a filing fee. New paragraph 1.53(d) provides that, where a filing date has been assigned to a filed specification and drawing, the applicant will be notified and be given a period of time in which to file the missing fee, oath or declaration and to pay the surcharge due. The time period the Office plans to set is one month from the date of notification by the Patent and Trademark Office, but in no case less than two months after the date of

filing of the application. New paragraph 1.53(e) indicates that a patent application will not be forwarded for examination on the merits until all required parts have been received. New paragraph 1.53(f) indicates that international applications filed under the Patent Cooperation Treaty which designate the United States of America are considered to have a United States filing date under PCT Article 11(3), except as provided in 35 U.S.C. 102(e), on the date the requirements of PCT Article 11(1)(i) to (iii) are met. Paragraphs 1.53(b) and (c) have been modified from those proposed by changing the word "received" to the word "filed." The word "receipt" in paragraph 1.53(c) has also been changed to "filing". These changes have been made to ensure that the language of §1.53 cannot be considered to conflict with the use of "Express Mail" to file patent applications and obtain a filing date as of the date of deposit as "Express Mail" with the United States Postal Service.

Section 1.54

Section 1.54 is amended as proposed to designate the existing section as paragraph (a) and add a reference to §1.53. Paragraph 1.54(b) is added to indicate that applicant will be informed of the serial number and filing date of the application.

Section 1.55

Section 1.55 is amended to limit the section to claims for foreign priority by removing paragraphs (a) and (d) and redesignating paragraphs (b) and (c) as paragraphs (a) and (b). Paragraph 1.55(a) is amended to change the reference from §1.65 to new §1.63. The final rule language includes a reference to 35 U.S.C. 172 which modifies 35 U.S.C. 119 for design patents.

Section 1.56

Section 1.56 is amended to revise paragraph (c) to remove reference to signing of the application but to add reference to signing of the oath or declaration pursuant to new §1.63. Paragraph 1.56(c) has also been modified from that proposed to break it down into four items as suggested by a comment. Under paragraph 1.56(c), an application may be stricken from the files if an oath or declaration pursuant to §1.63 is signed in blank, is signed without review of the oath or declaration by the person making the oath or declaration, or is signed without the review of the specification, including the claims, as required by §1.63(b). Paragraph 1.56(c) also provides for an application to be stricken from the files if application papers filed in the Office are altered after the signing of an oath or declaration pursuant to §1.63 referring to those application papers.

Section 1.57

Section 1.57 is removed as proposed since the requirements relating to applicant's signature to the oath or declaration of the application are adequately covered in other sections.

Section 1.59

Section 1.59 is rewritten as proposed to refer to and conform with the changes proposed in §1.53.

Section 1.60

Section 1.60 is amended to require the applicant to supply a copy of the originally signed application in all cases where the §1.60 filing procedure is used. The Office will no longer prepare copies. The Office, by a separate final rule, published at 47 F.R. 47242 on October 25, 1982, has adopted a new §1.62 to provide for the filing of a file wrapper continuing application which greatly lessens the need for the Office to continue to prepare copies under §1.60. The final rule language makes clear that the statement accompanying a true copy of the parent application must be a verified statement unless made by a person registered to practice before the Office.

Section 1.62

Section 1.62 is amended to avoid inconsistency with 35 U.S.C. 111 which becomes effective on February 27, 1983. 35 U.S.C. 111 as of that date permits filing dates to be granted to patent applications without receipt of the basic filing fee, or oath or declaration. Section 1.62 is therefore being amended to permit the granting of a filing date in accordance with §111. This amendment of §1.62 is necessary to ensure compliance with 35 U.S.C. 111. The Patent and Trademark Office finds that it would be impractical not to amend §1.62 so as to grant a filing date in accordance with 35 U.S.C. 111 and not doing so might also be construed to prevent applicants from taking advantage of the provisions of 35 U.S.C. 111 authorizing the delay in the filing of the fee and oath or declaration. If §1.62 is not amended in the manner set forth in this final rule, questions may be raised as to compliance with 35 U.S.C. 111 as it will exist effective February 27, 1983. Revised paragraph 1.62(a) indicates the minimum requirements for granting of a filing date. Paragraphs 1.62(b) and (c) cover the filing fee and oath or declaration requirements, respectively. Paragraph 1.62(d) relates to later filing of the filing fee or oath or declaration as provided for in 35 U.S.C. 111. Paragraphs 1.62(e)-(i) are identical to former paragraphs 1.62(b)-(f).

Section 1.63

Section 1.63 is added to replace §1.65 relating to the required content and execution of an oath or declaration filed as a part of a patent application and is intended to state the minimum contents thereof. An applicant may, if desired, choose to include one or more additional averments in the oath or declaration such as, for example, stating that the patent is not barred under the provisions of 35 U.S.C. 102. Paragraph 1.63(a) provides that the oath or declaration, (1) be executed in accordance with §1.66 or §1.68, (2) identify the specification to which it is directed in some definite manner such as giving the title of the invention or serial number of the application, if previously filed, (3) identify each inventor and his or her residence and country of citizenship, and (4) state whether the inventor is a sole or joint inventor of the claimed invention.

Paragraph 1.63(b) further requires the oath or declaration to state that the person signing the oath or declaration (1) has reviewed and understands the contents of the identified specification, (2) believes the named inventor is the original and first inventor, and (3) acknowledges the duty to disclose information which is material. While paragraph 1.63(b) requires the person signing the oath or declaration to review and understand the specification including the claims, it is not intended to require that such person be skilled in patent law so as to grasp the legal implications of claim language and drafting. The person must recognize, however, that what is being claimed is the subject matter which that person regards as his or her invention pursuant to 35 U.S.C. 112.

Paragraph 1.63(c) requires that any application in which a claim for foreign priority is made identify in the oath or declaration the foreign application for patent or inventor's certificate on which priority is claimed, and any foreign application having a filing date before that of the application on which priority is claimed.

Paragraph 1.63(d) requires that the oath or declaration in a continuation-in-part application, which discloses and claims subject matter in addition to that disclosed in the prior copending application, state that the person making the oath or declaration acknowledges the duty to disclose material information as defined in §1.56(a) which occurred between the filing date of the parent application and the national or PCT international filing date of the continuation-in-part application. This latter requirement is not new, but is included to serve as a reminder to the person making the oath or declaration of this duty to disclose material information such as foreign patenting, publication, or public use or sale in the United States which occurred more than one year prior to the filing date of the continuation-in-part application. For example, in circumstances where the claims of the continuation-in-part application are not fully supported by the disclosure of the parent application so as to be entitled to an earlier effective filing date under 35 U.S.C. 120, the duty to disclose extends to any material information, as defined in §1.56(a) measured from the filing date of the continuation-in-part application. This would include the first foreign patenting, and any foreign patenting subsequent to the first which materially differs therefrom, of the subject matter of the parent application which occurred more than one year prior to the national or PCT international filing date of the continuation-in-part application. Any publication of the parent application, other than foreign patenting, or any public use or sale in the United States of the subject matter of the prior application, which occurred more than one year prior to the national or PCT international filing date of the continuation-in-part application, would also come within §1.56(a) in such circumstances. See In re Ruscetta and Jenny, 118 U.S.P.Q. 101 (C.C.P.A. 1958); In re van Langenhoven, 458 F. 2d 132, 173 U.S.P.Q. 426 (C.C.P.A. 1972), and Chromalloy American Corp. v. Alloy Surfaces, Co., Inc., 339 F. Supp. 859, 173 U.S.P.Q. 295 (Del. 1972).

Section 1.64

Section 1.64 is added as proposed to clearly indicate who must sign the oath or declaration of a patent application.

Section 1.65

Section 1.65 is removed as proposed because the oath or declaration requirements set forth therein are covered by new §1.63.

Section 1.67

Section 1.67 is amended as proposed to remove all of paragraphs (a) and (b) and substitute therefor new wording. Paragraph 1.67(a) indicates that a supplemental oath or declaration meeting the requirements of new §1.63 may be required to correct deficiencies or inaccuracies present in an earlier oath or declaration. Paragraph 1.67(b) requires a supplemental oath or declaration to be filed (1) when a claim is presented embracing material not originally claimed and (2) when a subsequently filed oath or declaration under §1.53(d) refers to an amendment which includes improper new matter. Paragraph 1.67(b) also clearly states the prohibition against entry of new matter after the filing date of the application.

Section 1.69

Section 1.69, paragraph (b), is amended as proposed to change the time at which a translation of a non-English language oath or declaration which has not been supplied by the Office must be filed. The time period for filing the translation is changed to two months after notification that a translation is required. The reference to §1.65 in paragraph 1.69(b) is changed to §1.63.

Section 1.70

Section 1.70 is amended to refer to §1.63 for the requirements to be met when an oath or declaration is filed under 35 U.S.C. 371(c)(4). The wording of the title in the final rule is changed to reflect more clearly the subject matter of the rule.

Section 1.77

Section 1.77 is amended as proposed to change paragraphs (h) and (i) to refer to the abstract of the disclosure and signed oath or declaration, respectively.

Section 1.97

Section 1.97 is amended to change the title from "prior art statement" to "information disclosure statement". This change is appropriate since the designation "information disclosure statement" more accurately characterizes the nature and content of the information which may be included in such a statement. Information which is required to be submitted pursuant to §1.56 may ultimately be determined not to be "prior art," but nevertheless may be "material" pursuant to §1.56. Section 1.97

has also been modified from that proposed by eliminating the word "material" since information submitted pursuant to §1.97 may be considered to be of questionable materiality or may be determined, upon examination, not to be "material". Section 1.97 now provides that an information disclosure statement should be filed with the application or within the later of three months after the filing date of the application or two months after applicant receives the filing receipt. Paragraph 1.97(b) has been amended in recognition that applicant may choose to furnish other material information in another manner or statement. Paragraph 1.97(b) now also refers to section 1.56(a) for the definition of "material information". The amendments to paragraph 1.97(b) do not in any manner reduce the obligation to submit material information as defined in §1.56(a).

Section 1.98

Section 1.98 indicates that information disclosure statements should list prior art with all of the information which is required to print such citations on the front page of a patent. The final rule states clearly that the publication date indicated on the document should be submitted. This will not serve to preclude a showing of a different, actual publication date. Another purpose of the citation requirements in this section is to permit ready reference to the document from its citation.

Section 1.99

Section 1.99 is amended to change the title to be consistent with the amendment to §1.97.

Section 1.101

Section 1.101 is amended to indicate specifically that applications which are to have their examination advanced pursuant to §1.102 will be taken up for examination out of order by the examiner. The final rule is also modified to set out when international applications which have complied with the requirements of 35 U.S.C. 371(c) are taken up for action.

Section 1.118

Section 1.118 is amended as proposed to designate the previous section as new paragraph (a) and amend it to clearly state that no new matter may be introduced into an application and to make specific reference to §§1.53, 1.63 and 1.67. New paragraph 1.118(b) indicates how improper amendments which introduce new matter in the specification or claims will be handled by the examiner.

Section 1.123

Section 1.123 is amended to require all corrections to drawings to be made by bonded draftsmen at applicant's expense since the Office does not have sufficient draftsmen to make such corrections. Sketches of any desired corrections will, however, still require approval of the examiner. The final rule makes

clear that changes in the drawing may be made by submission of substitute drawings.

Section 1.125

Section 1.125 is amended to relax the prohibition against substitute specifications which are not required by the examiner. The section, however, adds the requirement that any substitute specification filed must be accompanied by a statement that the substitute specification includes no new matter. Under the section the statement must be a verified statement if made by a person not registered to practice before the Office. The final rule specifies that a substitute specification may not be accepted unless it is clear to the examiner that processing of the application would be facilitated thereby.

Section 1.131

Section 1.131 is amended as proposed to refer to the use of affidavits or declarations under the section during reexamination of a patent as long as the patent upon which the rejection is based does not claim the rejected invention. Section 1.131 cannot be used to overcome a rejection based upon a United States patent claiming the rejected invention. This is true regardless of whether the rejected claims are contained in an application being examined or a patent being reexamined. Section 1.131 is inapplicable if the same invention is being claimed by the United States patent upon which the rejection is based. Under the section as amended, the same person or persons who would make the affidavit or declaration in an application will be required to make the affidavit or declaration on behalf of the owner of the patent under reexamination.

Section 1.132

Section 1.132 is amended as proposed to refer to the use of affidavits or declarations under the section during reexamination of a patent.

Section 1.137

Section 1.137 is amended as proposed to except from the provisions of paragraph (b) those applications abandoned pursuant to §1.53(d) because the fee, oath, or declaration and the surcharge were not submitted. Section 111 of Title 35, United States Code, as amended by Public Law 97-247, requires that any delay in submission of the fee and oath be shown to be unavoidable. Thus, paragraph (b) of §1.137 permitting revival where abandonment was unintentional is inapplicable to the revival of applications which become abandoned pursuant to §1.53(d).

Section 1.141

The proposed amendments to §1.141 are withdrawn infra to permit the public to study the issues involved and make any further recommendations considered appropriate.

Section 1.153

Section 1.153 is amended to change the reference for oath and declaration requirements from §1.65 to §1.63 and to conform the language of the rule to be consistent therewith.

Section 1.154

Section 1.154 is amended as proposed to revise paragraph (e) to refer to the signed oath or declaration requirements of §1.153(b).

Section 1.162

Section 1.162 is amended as proposed to change the reference from §1.65 to §1.63.

Section 1.163

Section 1.163 is amended as proposed to change the wording of the section to clearly indicate that a signed oath or declaration is required rather than a signed specification.

Section 1.172

Section 1.172 is amended to indicate clearly that the reissue oath is signed and sworn to rather than the reissue application. The final rule has been modified from that proposed by referring to a "reissue oath" rather than to "reissue oaths."

Section 1.174

Section 1.174 is amended as proposed to remove the requirement that photoprints of original drawings be securely mounted or pasted on sheets of drawing board because paper drawings are acceptable.

Section 1.175

Section 1.175 is amended as proposed to change the reference to the oath or declaration from §1.65 to §1.63.

Sections 1.301, 1.302 and 1.303

The proposed amendments to sections 1.301, 1.302 and 1.303, referring to the Court of Appeals for the Federal Circuit rather than to the Court of Customs and Patent Appeals, have been adopted as final rules as published on October 26, 1982 at 47 FR 47380-47382 and corrected on November 5, 1982 at 47 FR 50142 and therefore are not republished here.

Section 1.324

Section 1.324 is amended to include wording similar to that in §1.48 for correction of inventorship in applications.

Section 1.325

Section 1.325 is amended as proposed to include reference to the reexamination procedure.

Section 1.335

Section 1.335 is added as proposed to provide a new section relating to the filing in the Patent and Trademark Office of notices of arbitration awards. Such filing is required under §294 of Title 35, United States Code, as added by Public Law 97-247. The final rule has also been modified in response to a comment to indicate that the notices of arbitration awards are intended to be placed in the patent files.

Section 1.565

The proposed amendments to §1.565 are withdrawn infra to permit the public to study the issues involved and make any further recommendations considered appropriate.

Section 5.12

Section 5.12 is amended as proposed to separate the section into two paragraphs. Paragraph (a) provides that the filing of an application for an invention made in the United States is considered to include a petition for a license for foreign filing. If a license is granted, it will be indicated on the filing receipt. If it is not granted, no indication of the denial will appear. Failure to grant a license should be considered a denial of a first petition for a license. A subsequent petition may be filed under §5.12(b). Section 5.12(b) is essentially the text of §5.12 in its previous form. No rights to file a petition for license are being removed.

Withdrawal Of Proposed Amendments To Sections 1.141 and 1.565.

A number of the speakers at the public hearing held on December 16, 1982, urged that the amendments to §§1.141 and 1.565 be deferred or dropped pending further study. Those urging that the proposed amendments to §1.141 not be adopted at this time included speakers from the American Patent Law Association, from Committee 103 of the American Bar Associations's Patent, Trademark & Copyright Section, and from the Bar Association of the District of Columbia. The Boston Patent Law Association urged that the amendment to §1.565 be removed or held in abeyance. The American Patent Law Association indicated that more time was needed for its committees to analyze the issues in the proposed amendments to §§1.141 and 1.565.

In response to the recommendations received at the public hearing, the proposed amendments to §§1.141 and 1.565 are being withdrawn at this time to permit the public to study the issues involved and make any further recommendations considered appropriate. Pending the further study referred to by the speakers at the hearing and consideration of any recommendations resulting therefrom, the Office will continue to operate under present §§1.141 and 1.565 as interpreted by the Manual of Patent Examining Procedure and relevant Patent and Trademark Office and judicial precedents.

Responses to Comments on the Rules

Specific comments were received on a number of the sections. All of the comments, including the written comments and the oral testimony, were considered in adopting the changes set forth herein.

Forty-eight letters presenting written comments were received and seven persons testified at the public hearing on December 16, 1982.

Comments appear below along with responses thereto.

Comment:

One comment objected to inadequate notice regarding these proposed rule changes.

Reply:

The proposed rules notice was published in the Federal Register on October 27, 1982. This is more than seven weeks prior to the date of the hearing and four months prior to the effective date of the final rules. Such periods are considered to be reasonable in view of the fact that the legislation requiring the rule changes was only enacted on August 27, 1982 and that other rule changes were required to be implemented by October 1, 1982.

Comment:

One comment proposed that "Patent and Trademark Office" should be used in the rules rather than merely "Office".

Reply:

The proposal has been adopted in the final rules in those locations where confusion may otherwise result.

Comment:

Five comments requested that promulgation of §§1.10, 1.63, 1.97, 1.141 and 1.565(e) be delayed and the period for comment extended until March 30, 1983.

Reply:

Amendments to §§1.141 and 1.565 are not being promulgated at this time to provide time for further consideration and study as requested. If after study, a rule change is felt desirable, a new proposal will be issued. New §1.10 is being promulgated to make it available to applicants as it was intended in the statute. New §1.63 is being added and §1.65 deleted to reduce the formal statements required. If desired, the old oath and declaration forms may continue to be used if the statement is included that applicant "has reviewed and understands the contents of the specification, including the claims". For continuation-in-part applications, it is necessary to also include language is conformance with §1.63(d). Section 1.97 is being promulgated to remove problems relating to the time period in the current wording and to clarify the section in general.

Comment:

One person questioned why Sunday was not mentioned in §1.6(b) or (c).

Reply:

Section 1.6(b) and (c) are limited to weekdays which by definition excludes Sunday.

Comment:

Two comments were received which proposed that only a certificate of mailing procedure as in §1.8(a) be used for determining the date of deposit under 35 U.S.C. 21.

Reply:

The filing date of an application is considered to be much more critical than the filing dates of papers accepted under §1.8. The application filing date is often critical for determining if a statutory bar exists, whether foreign priority can be claimed and who is the senior party in an interference. Therefore, papers filed for purposes of receiving an application filing date should have some clear indication of the date of receipt by the United States Postal Service. Such a practice would also probably require storing all of the envelopes in the file wrapper for record purposes.

Comment:

Three comments were received which stated that private courier services should also be provided for in §1.10.

Reply:

Section 21(a) as amended by Public Law 97-247 provides for filing dates being given only when "deposited with the United States Postal Service." Although private courier services may be used to deliver papers to the Patent and Trademark Office, the actual date of receipt by the Patent and Trademark Office will be considered to be the filing date.

Comment:

A comment was received which argued that the Post Office date stamp should be stamped on the mailing label instead of having to enter the label number on each document.

Reply:

Stamping the mailing label would not add anything since the postal clerk receiving the "Express Mail" must already indicate the date and time of deposit and initial the label. A purpose of placing the label number on each paper is to permit several

papers to be placed in a single envelope. The mailing labels may be retained in the Patent and Trademark Office for later verification.

Comment:

Seven comments were received that the requirement that the item be received the following day (§1.10(b)) was unnecessarily restrictive.

Reply:

Section 1.10 does not require that the item be received the next day in the Patent and Trademark Office in order to receive the date of deposit as the mailing date. The one day reference has been deleted. Further proof of mailing may be required where an unreasonable period of time is involved and supporting evidence is not otherwise available to the Patent and Trademark Office. Documents deposited with the United States Postal Service will be given a filing date which corresponds to the date of receipt indicated by the postal clerk on the "Express Mail" mailing label.

Comment:

Four comments indicated that §1.10 does not assist in placing applicants and attorneys outside the Washington area on the same footing as those in Washington.

Reply:

The main purpose of §1.10 is to implement 35 U.S.C. 21(a) in a manner which would provide for granting filing dates for papers and fees as of the date of their deposit with the United States Postal Service. Certainly these provisions using "Express Mail," together with the certificate of mailing procedure available under §1.8, will go a long way in reducing last minute deliveries to the Patent and Trademark Office by persons outside the Washington area.

Comment:

Two comments stated that the comments accompanying §1.10(c) should be clarified to explain the meaning of "more than one day."

Reply:

The final rule has been clarified.

Comment:

It was proposed by one person that the "affidavit or declaration" under §1.10(c) be waived if the statement is made by a registered attorney or agent.

Reply:

The suggestion has been adopted.

Comment:

It was indicated by one person that certified mail provides proof of mailing date under §1.10 by virtue of the Post Office stamp on the certified mail receipt card.

Reply:

The information on the certified mail receipt card is of no benefit to the Patent and Trademark Office since it is immediately returned to the sender. The Patent and Trademark Office would not be able to retain any information which gives proof of the date of mailing.

Comment:

Three comments raised questions as to the need to make the acceptance of the "Express Mail" contingent upon the performance of the Post Office in §1.10(c).

Reply:

The acceptance of the "Express Mail" is not contingent upon "next day delivery". The reference in §1.10(c) to proof of mailing merely provides a basis for the Office requiring proof of mailing where an explanation appears to be necessary to clarify the record. Such information is expected to be required only in a few instances. The rule has also been revised to clarify this matter.

Comment:

Five persons suggested the use of registered or certified U.S. mail for obtaining filing dates under 35 U.S.C. 21.

Reply:

Registered mail does not provide any information or evidence to the Patent and Trademark Office as to the date of mailing other than the postmark, which is often unreadable. Storage of envelopes containing such postmarks is also burdensome. The deficiency of certified mail has already been discussed.

Comment:

One person questioned what treatment will be accorded a paper placed in an "Express Mail" box receptacle after the box has been cleared for the last time on a given day.

Reply:

The paper will be considered to be deposited as of the date of receipt indicated on the "Express Mail" mailing label by the Postal Service clerk.

Comment:

One person commented that he found the idea of using a declaration or affidavit to establish a date of deposit unacceptable because it exposes the integrity of the assignment of filing dates to the risk of deception.

Reply:

The use of declarations or affidavits is usually intended to help explain activities which can be supported by exhibits. For example, if the Office copy of the mailing label was not entirely readable, applicant's copy of the "Express Mail" mailing label could accompany a declaration and serve as the basis for granting a filing date.

Comment:

Three persons objected to permitting only the individual who places the correspondence in an "Express Mail" facility to execute the certificate of express mailing under §1.10(c).

Reply:

The wording of §1.10(c) differs from §1.8 because the documents which are expected to be filed under §1.10 are patent and trademark applications. The filing dates of such documents are very important and should therefore be based on personal knowledge.

Comment:

One comment was received which suggested that §1.10 be adopted with an effective date retroactive to a year earlier.

Reply:

Such an earlier date is not possible since the statutory authority for §1.10 does not come into effect until February 27, 1983.

Comment:

One comment proposed designating the Patent and Trademark Office as an "Express Mail" Post Office to make lower rates available.

Reply:

Such a designation is not possible.

Comment:

One person requested that the Patent and Trademark Office publish a form of certificate of mailing by "Express Mail" suitable for purposes of §1.10(b).

Reply

A suggested form is included in the preamble of this rule change.

Comment:

One comment proposed that §1.10(c) clearly state what evidence will be necessary and sufficient to prove a filing date by mailing.

Reply:

A specific answer cannot be given since it is dependent upon the particular fact situation and what evidence is actually available.

Comment:

Two comments questioned whether P.L. 97-247 authorized a rule such as §1.10 granting filing dates as of the mailing date.

Reply:

The question raised by this comment has been treated in the discussion of §1.10 supra.

Comment:

One comment proposed that §1.10 be corrected to read --Any paper or fee required to be filed-- to more closely conform with 35 U.S.C. 21(a).

Reply:

No need is seen to change §1.10 as suggested since, if a patent is desired, it is "required" that each paper relating to an application be filed in the Patent and Trademark Office.

Comment:

One comment indicated that the requirement to place the "Express Mail" label number on each paper and fee is not realistic.

Reply:

The placement of the label number on each paper or fee allows later verification of the mailing dates of all different papers mailed in one envelope and is not seen to be overly burdensome.

Comment:

A question was raised as to whether the "Express Mail" label number should be placed on every page.

Reply:

The label number need not be placed on each page. It should, however, be placed on the first page of each separate document, such as, a new application, amendment, assignment, and transmittal letter for a fee, along with the certificate of mailing by "Express Mail". Although the label number may be on checks, such a practice is not required.

Comment:

A question was raised by one party as to the location within the Patent and Trademark Office of the mailing labels where papers to different applications are placed in the same envelope.

Reply:

The mailing labels from all "Express Mail" packages are expected to be removed and initially retained centrally in the Mail Room of the Patent and Trademark Office. The number on each document will allow direct access to the appropriate mailing label if any questions should arise.

Comment:

One comment suggested that §1.22(b) be amended to exclude itemization of all fees where a general authorization to charge a deposit account has been given.

Reply:

Even where fees are charged to a deposit account, it is desirable to know specifically which fees are to be paid. Therefore, the suggestion has not been adopted.

Comment:

One comment was received which suggested adding a sentence to §1.41(d) indicating that the filing of an oath or declaration executed by the applicant would constitute proof of authority to file the application.

Reply:

Such an additional sentence is not considered to be necessary since the Patent and Trademark Office does not intend to utilize the provisions of §1.41(d) unless a controversy arises.

Comment:

One comment was received which suggested the addition to the end of §1.42 of the words "except for patents granted to the assignee either of the inventor or of the legal representative of the inventor."

Reply:

No change is considered to be necessary since few, if any, problems have arisen without such additional wording in the past. The existing rule wording "upon proper intervention" also provides protection for assignees.

Comment:

One comment was received which indicated that §1.46 does not clearly authorize an assignee of a part interest to cause an application to be placed on file.

Reply:

Although §1.46 may not make this point clear, it is clear from §1.41(c).

Comment:

One comment recommended that the requirement to show diligence in correcting inventorship under §1.48 be deleted.

Reply:

It is felt that corrections of inventorship should be diligently made in patent applications. The naming of correct inventorship is necessary for the Patent and Trademark Office to make decisions on topics such as double patenting, priority claims and first inventorship.

Comment:

It was recommended in one comment that the verified statement of facts required by §1.48 "by the original named inventor or inventors" be replaced by a requirement that he or they merely assent to the statement of the facts since others may be better able to provide the best evidence.

Reply:

Since it is the original inventorship that is being changed, it is believed that all of the previously named inventors should positively indicate their agreement with the facts in the case. Affidavits by other individuals may also be supplied where such persons have direct personal knowledge of certain aspects of the case.

Comment:

One comment indicated that "it seems a reasonable presumption that if ownership is unaffected, deceptive intent is absent" in a §1.48 correction of inventorship situation and that such a presumption could be written into the rules.

Reply:

Even if applications are commonly owned, the wrong inventorship could be deceptively named to obtain rights which are only available to the same inventive entities. The report on Public Law 97-247 also states that "the Commissioner must be assured of the presence of innocent error, without deceptive intention --- " before permitting a substitution of a true inventor's name.

Comment:

One person suggested that the deceptive intent in §1.48 refer to the acts of the actual inventors rather than to both the alleged and actual inventor or inventors.

Reply:

This suggestion has been adopted in both §§1.48 and 1.324, but deceptive intention on the part of other parties is subject to review under §1.56.

Comment:

One person suggested that in §1.48, line 3 "may" be changed to --must--.

Reply:

The suggestion has not been adopted. Corrections may only be made if the conditions set forth in §1.48 are satisfied.

Comment:

Two comments objected to the insertion of "material" in §1.51(b).

Reply:

This word has been removed and does not appear in the final rule.

Comment:

One comment suggested changing "an" to --a complete-- in the title of §1.51.

Reply:

This suggestion has been adopted.

Comment:

One comment indicated that §§1.52(c) and 1.56(c) seemed overly inflexible and harsh when considering minor grammatical changes.

Reply:

Although §1.56 indicates that applications "may" be stricken, rather than "must" be stricken, it is still considered important to maintain a clear line in the regulations against changes in the original applications made after the execution of the application oath or declaration. The line between grammatical changes and changes relating to the merits is frequently unclear.

Comment:

Three comments noted an apparent inconsistency between proposed §§1.10 and 1.53 as to whether §1.10 relates to the filing of patent applications.

Reply:

Section 1.10 does relate to the filing of patent applications. In order to clarify the wording, "received" in §1.53(b) has been changed to "filed".

Comment:

One comment was received suggesting that a sentence be added to §1.53(d) to indicate that PCT applicants cannot submit late filing fees, oaths or declarations under 35 U.S.C. 371.

Reply:

Such a reference in §1.53 does not appear appropriate because this section relates to "filing dates". In the PCT situation, the filing date was already granted at the time of filing the PCT international application.

Comment:

One comment was received which suggested that §1.53(a) be rewritten to indicate all applications are assigned serial numbers but not accorded filing dates.

Reply:

The proposal was not adopted since it is considered unnecessary.

Comment:

One person suggested that §1.53(b) be amended to specify that only "a specification purporting to contain a description and at least one claim..." is needed to obtain a filing date.

Reply:

No change is being made since a determination must be initially made as to whether or not a specification has been filed. In any case, sufficiency of the specification must later be checked by the examiner.

Comment:

One person indicated that the time period for filing a correction to a defect in an application is left entirely within the discretion of the Commissioner and that any setting of periods of time would be tantamount to an exercise of rulemaking authority. Section 1.53(d) should be provided with an explicit time limitation.

Reply:

No specific time period is considered to be necessary in the regulations. The Commissioner has full authority and discretion under the statute in 35 U.S.C. 111 to set periods of time. The statute does not require the Commissioner to use the rulemaking process to set time periods for response to an action or requirement by the Patent and Trademark Office in a patent application.

Comment:

Two comments were received objecting to the use of the words "or otherwise disposed of" in §1.53(c).

Reply:

This wording has existed in §1.53(b) in the past without objection. No need is seen to depart from this wording at this time.

Comment:

One person questioned whether the change in §1.54(b) would result in return post cards not being stamped with the application serial number.

Reply:

No change is intended in the existing return post card practice.

Comment:

One comment proposed adding another sentence to §1.154(b) indicating that foreign priority claims will be acknowledged on the filing receipt.

Reply:

This proposal is not being adopted since the examiner must determine whether the stautory requirements of 35 U.S.C. 119 have been met before an acknowledgment can be sent.

Comment:

One comment suggested that the Patent and Trademark Office indicate on the filing receipt both the filing date under §1.10 and the actual date of receipt.

Reply:

The actual date of receipt can be obtained by requesting a receipt from the Postal Service. The actual date of receipt cannot be placed on the filing receipt because of current computer limitations. The suggestion is therefore not being adopted at this time.

Comment:

One comment was received indicating that it is not clear whether or not an application based on a specification and drawing, but containing no oath or declaration or filing fee, could serve as the basis for a priority claim under 35 U.S.C. 120.

Reply:

If the filed specification and drawings fully disclose the invention as required by 35 U.S.C. 112, the application may serve as a basis for a priority claim under §120 even if no oath or declaration, or no fee has been filed, as long as the continuing application is filed prior to the abandonment of the first application under §1.53(d).

Comment:

One comment suggested that §1.55(b) be removed since the requirements of the statute are fully set forth in 35 U.S.C. 119.

Reply:

Although the statutory requirements set forth basic requirements, it is felt that the more specific details of §1.55(b) provide needed guidance for applicants.

Comment:

Two persons questioned the meaning of "inspection and review" in §1.56(c) and suggested certain amendments.

Reply:

The words "inspection and" are being removed to eliminate any redundancy. The paragraph has also been broken down into four items as proposed by a comment.

Comment:

One suggestion was made that applicant be allowed to order a copy of the parent patent, with payment of fee, when filing a §1.60 application.

Reply:

Such a practice is contrary to the intent of the rule change. The problems the Patent and Trademark Office is attempting to solve by the change, which are caused by poor copies and delays in processing, would remain with such a practice.

Comment:

Two persons suggested that §1.60 be amended to drop "and claimed" from the title.

Reply:

The suggestion has been adopted.

Comment:

One person suggested that §1.60 be modified to drop the requirement for verification by affidavit when the statement is made by a registered patent attorney or agent.

Reply:

The suggestion has been adopted.

Comment:

One comment noted that there is no specific requirement in §§1.56, 1.63 or 1.98 to identify foreign applications filed more than one year prior to the U.S. filing date.

Reply:

Section 1.63(b)(3) broadly requires applicant to acknowledge the duty to disclose information material to the examination of the application. This information includes foreign patents based on applications filed more than a year prior to the filing date of the United States application and which issue before the filing date of the United States application.

Comment:

One person felt that §1.63(b)(1) will be a disaster for the patent system since the inventor may not be physically able to review and understand the invention or because the legal language format used in claims may not be understood by the inventor. Five persons argued that adoption of §1.63 would result in raising the defense that the inventor did not understand the claims in each patent infringement suit.

Reply:

The inventor is not expected to understand all the legal interpretations or limitations in a claim. The inventor is expected to recognize that what is being claimed is the subject matter which the inventor regards as his or her invention pursuant to 35 U.S.C. 112. The physical factors have to some extent existed in past practice and have been handled on a case-by-case basis where necessary. The situation outlined would exist in any signing of a legal document. The wording of §1.63 has been explained in the preamble to minimize occurrences of problems.

Comment:

One comment noted that many inventors do not know whether additional subject matter is claimed in a continuation-in-part application under §1.63(d).

Reply:

The wording in §1.63(d) is considered to be appropriate and in accordance with case law. If uncertainty exists the attorney or agent, if any, should clarify the matter and §1.63(d) should be followed.

Comment:

One person proposed that §1.63(d) be modified to explicitly require the disclosure of foreign patents granted before the filing of the continuation-in-part application.

Reply:

Section 1.63(d) has been amended to clearly indicate that material information pursuant to §1.56(a) between the filing date of the parent application and the filing date of the continuation-in-part application must be disclosed. The discussion of new §1.63 refers to material foreign patents published during this time interval.

Comment:

Two comments indicated concern with the parenthetical language in proposed §1.63(d) in that it would create severe problems.

Reply:

Paragraph (d) of §1.63 has been amended to remove such problems.

Comment:

One comment suggested adding --he or she is aware of-- after information in §1.63(b)(3) and (d).

Reply:

This suggestion is not adopted since such wording is already present in §1.56(a).

Comment:

One comment suggested that §1.63(c) clarify what is intended by "the first filed foreign application," particularly in view of 35 U.S.C. 119, third paragraph.

Reply:

The rule has been amended to clarify the matter.

Comment:

One comment was received suggesting changes be made in the title and that paragraph (b) of §1.70 refer to §1.63 instead of "this section."

Reply:

The change suggested to the title has been made. The suggestion to paragraph (b) has not been made since it is considered unnecessary.

Comment:

Three comments were received which indicated that the wording of §1.97(a) would require an immediate filing of disclosure information if the filing receipt is received just before three months after filing.

Reply:

The wording of §1.97(a) has been changed to remove this problem.

Comment:

One comment was received which urged that the title of §1.97 and contents of §1.97(b) not be changed, since the proposed wording would not require filing of the closest prior art.

Reply:

The proposed changes are not intended to make any changes in the type of information which is to be submitted to the Office. The proposal has been adopted in modified form.

Comment:

One person indicated preference for the use of "prior art" in §§1.51(b), 1.97, 1.98, and 1.99 since it does not create an inferred admission that the information submitted is material. Five comments favored the removal of "prior art" from §1.97 but objected to the addition of "material".

Reply:

The rule change was proposed to answer arguments that the use of the term "prior art" implied that the information was a reference against applicant's invention. Since the majority of the comments supported modifying the rule, the use of the terms "prior art" as well as "material" are being dropped.

Comment:

Two comments were received concerning §1.98(a) suggesting that the "place of publication" be clarified or removed.

Reply:

This suggestion has not been adopted since the "place of publication" is not mandatory. It is intended to mean the city and country of publication. Also the citation of the "place of publication" is consistent with the §1.107(a) requirements.

Comment:

It was suggested by one person that §1.101 be amended to clarify when PCT international applications which have entered the national stage should be taken up for examination.

Reply:

An amendment has been made to §1.101 as suggested to clarify that they are taken up in order based on the date they have entered the national stage by compliance with the requirements of 35 U.S.C. 371(c).

Comment:

One comment was presented suggesting that the words "which are not examined on the merits" in §1.101 be removed.

Reply:

The suggestion has been adopted.

Comment:

One comment urged returning to the use of the Office draftsmen for minor corrections to reduce the burden under proposed §1.123.

Reply:

Some minor corrections may be made by the Office draftsmen on a time-available basis. However, since the Office currently has only a few draftsmen who are responsible for reviewing and approving all drawings, very little time is presently available for making corrections.

Comment:

Four suggestions were made to amend §1.123 to specifically provide for the filing of substitute drawings if corrections are required.

Reply:

These suggestions have been adopted.

Comment:

One comment was received indicating that §1.125 should indicate to whom it should be clear that acceptance of a substitute specification would facilitate processing.

Reply:

An amendment has been made to clarify that it should be clear to the examiner.

Comment:

One comment suggested removal of the last sentence of §1.137(b) to permit §1.183 petitions to be filed to waive time periods for requesting revival of unintentionally abandoned applications.

Reply:

No change in §1.137(b) is considered to be appropriate at this time since §1.137(b) only became effective on October 1, 1982.

(Since changes to §1.141 are not being promulgated in this rule change, comments and replies to this section are not included.)

Comment:

One comment pointed out that the reference to a "period of twelve months" in §1.153 was indefinite.

Reply:

Section 1.153 has been amended to remove the indefiniteness.

Comment:

One comment was presented which suggested that §1.172 refer to a "reissue oath" rather than to "reissue oaths."

Reply:

This suggestion has been adopted.

Comment:

One comment suggested the insertion of "the filing of" before "each patent" in §1.335(a) and (b).

Reply:

The suggestion has been adopted.

(Since the proposed addition of a new paragraph (e) to §1.565 is not being adopted in this rule change, comments and replies to this section are not included.)

Comment:

One suggestion was made that a procedure be designed in which foreign filing licenses could be granted by return post card without losing the time required to send the filing receipts.

Reply:

It is felt that the procedure under §5.12 should be adopted at this time and be placed into operation. If after some experience additional modifications are found desirable, further changes could be made. To introduce several alternative procedures at this time is considered to be too complex and may endanger the success of the proposed procedure.

Comment:

One comment requested that the Office grant a prospective foreign filing license under §5.12 for all data and amendatory material to be filed abroad.

Reply:

Such petitions are not part of this proposed change but this concept is being considered in a separate rule change proposal.

Comment:

One comment suggested that the Filing Receipt specifically indicate whether or not a license has been denied under §5.12.

Reply:

The proposed practice under §5.12 would indicate on the Filing Receipt when a license is granted. On other cases in which a license is not granted further review is required. A license may still be granted at a later date.

Comment:

One comment stated that it should be possible to petition at any early date for a foreign filing license as well as obtain one on the filing receipt.

Reply:

It will still be possible to petition earlier for a license under revised §5.12.

Implementation Of Patent Procedure Revisions

The effective date of the patent procedure revisions contained in this rulemaking is February 27, 1983. The various sections will be implemented in the manner set forth below:

§1.10 Filing of papers and fees by "Express Mail" with certificate.

The "Guidelines under §1.10" set forth below provide guidance in implementing §1.10:

Guidelines under §1.10

A) The certification under §1.10 requires a signature of the person depositing the paper with the United States Postal Service as "Express Mail". Specifically, if the certification under §1.10 appears on a paper that requires a signature, two signatures are required, one for the paper and one for the certification under §1.10.

B) When possible, the certification under §1.10 should appear on an upper portion of the first page of the paper being submitted. However, if there is insufficient space to make the certification on the same paper, such as in the case of the patent issue fee transmittal form PTO-85, the certification should be on a separate sheet securely attached to the paper.

C) When the certification is presented on a separate sheet, that sheet must (1) be signed and (2) fully identify and be securely attached to the paper or fee it accompanies. The required identification should include the serial number and filing date of the application as well as the type of paper being filed, e.g., complete application, specification and drawings, responses to rejection or refusal, notice of appeal, etc. If the serial number of the application is not known, the identification should include at least the name of the inventor(s) and the title of the invention. An unsigned certification will not be considered acceptable.

Moreover, without the proper identifying data, a certification presented on a separate sheet will not be considered acceptable

if there is any question or doubt concerning the connection between the sheet and the paper filed.

D) In situations wherein the correspondence includes papers for more than one application e.g., a single envelope containing separate applications or papers for various parts of the Patent and Trademark Office, each paper must have its own certification and the "Express Mail" label number as a part thereof or attached thereto.

E) In situations wherein the correspondence includes several papers directed to the same application (e.g., a proposed response under 37 CFR 1.116 and a notice of appeal), each paper should also have its own certification as a part thereof or attached thereto.

F) Practitioners may place the certification language on the first page of a paper with an inked stamp. Such a practice is encouraged because the certification is not only readily visible but also forms an integral part of the paper. An example of a preferred stamp is:

"Express Mail" mailing label number ____________
Date of Deposit ______________________________

I hereby certify that this paper or fee is being deposited with the United States Postal Service "Express Mail Post Office to Addressee" service under 37 CFR 1.10 on the date indicated above and is addressed to the Commissioner of Patents and Trademarks, Washington, D.C. 20231.

____
(Typed or printed name of person mailing paper or fee)

____
(Signature of person mailing paper or fee)

§1.48 Correction of inventorship.

Any patent application pending on or after February 27, 1983, is subject to the provisions of this section.

§1.53 Serial number, filing date, and completion of application.

The provisions of this section apply to any patent application filed on or after February 27, 1983.

§1.63 Oath or declaration.

The provisions of §1.63 will become effective on February 27, 1983, and will apply to any oath or declaration filed on or after that date. However, in order to provide a smooth transition from the old oath or declaration requirements to the new, the Office will continue to accept between February 27, 1983, and June 30, 1983, any oath or declaration in compliance with §1.65 as it existed immediately prior to February 27, 1983, so long as that oath or declaration is attached to and was executed as a part of an application to be filed in the Patent and Trademark Office.

Effective July 1, 1983, all oaths or declarations filed under §1.51(a)(2) as a part of a patent application must fully comply with §1.63.

A suggested format for a declaration is set forth below:

Declaration For Patent Application

As a below named inventor, I hereby declare that:

My residence, post office address and citizenship are as stated below next to my name,

I believe I am the original, first and sole inventor (if only one name is listed below) or an original, first and joint inventor (if plural names are listed below) of the subject matter which is claimed and for which a patent is sought on the invention entitled

____,
the specification of which

(check one) ☐ is attached hereto.

☐ was filed on ______________________ as
Application Serial No. ____________________
and was amended on ______________________.
(if applicable)

I hereby state that I have reviewed and understand the contents of the above identified specification, including the claims, as amended by any amendment referred to above.

I acknowledge the duty to disclose information which is material to the examination of this application in accordance with Title 37, Code of Federal Regulations, §1.56(a).

I hereby claim foreign priority benefits under Title 35, United States Code, §119 of any foreign application(s) for patent or inventor's certificate listed below and have also identified below any foreign application for patent or inventor's certificate having a filing date before that of the application on which priority is claimed:

Prior Foreign Application(s)

			Priority Claimed	
(Number)	(Country)	(Day/Month/Year Filed)	☐ Yes	☐ No
(Number)	(Country)	(Day/Month/Year Filed)	☐ Yes	☐ No
(Number)	(Country)	(Day/Month/Year Filed)	☐ Yes	☐ No

I hereby claim the benefit under Title 35, United States Code, §120 of any United States application(s) listed below and, insofar as the subject matter of each of the claims of this application is not disclosed in the prior United States application in the manner provided by the first paragraph of Title 35, United States Code, §112, I acknowledge the duty to disclose material information as defined in Title 37, Code of Federal Regulations, §1.56(a) which occurred between the filing date of the prior application and the national or PCT international filing date of this application:

____________	____________	____________
(Application Serial No.)	(Filing Date)	(Status) (patented, pending, abandoned)
(Application Serial No.)	(Filing Date)	(Status) (patented, pending, abandoned)

I hereby declare that all statements made herein of my own knowledge are true and that all statements made on information and belief are believed to be true; and further that these statements were made with the knowledge that willful false statements and the like so made are punishable by fine or imprisonment, or both, under Section 1001 of Title 18 of the United States Code and that such willful false statements may jeopardize the validity of the application or any patent issued thereon.

Full name of sole or first inventor ____________

Inventor's signature ____________ ____________ Date

Residence ____________

Citizenship ____________

Post Office Address ____________

Full name of second joint inventor, if any ____________

Second Inventor's signature ____________ ____________ Date

Residence ____________

Citizenship ____________

Post Office Address ____________

(Supply similar information and signature for third and subsequent joint inventors.)

The declaration form set forth above is specifically designed for use where the specification is attached to the form and the specification and declaration are filed at one time, and also where the declaration form is filed after the specification and

drawings in accordance with §1.53. The form can be used where foreign priority is claimed under 35 U.S.C. 119 and where the benefit of one or more United States applications is claimed under 35 U.S.C. 120. Appropriate modifications can be made in the form so long as compliance with the rules is maintained. For example, if the form is being used as a supplemental declaration form which is being submitted after numerous amendments the form might appropriately be modified by changing the words "was amended on" to "with amendments through."

§1.335 Filing of notice of arbitration awards.

The written notices required by this section should be directed to the attention of the Office of the Solicitor, which Office will be responsible for processing of such notices.

Other Considerations

Environmental, energy, and other considerations: The rule change will not have a significant impact on the quality of the human environment or the conservation of energy resources.

The rule change is in conformity with the requirements of the Regulatory Flexibility Act. (Pub. L. 96-354), Executive Order 12291, and the Paperwork Reduction Act of 1980, 44 U.S.C. 3501 *et. seq*.

The rule change will not have a significant adverse economic impact on a substantial number of small entities (Regulatory Flexibility Act. Pub. L. 96-354) for several reasons. Public Law 97-247 has taken into consideration the impact it may have on small entities. In general, the rule change will also expedite proceedings before the Patent and Trademark Office, changing existing procedures where they can be simplified.

The Patent and Trademark Office has determined that this rule change is not a major rule under Executive Order 12291. The annual effect on the economy will be less than $100 million. There will be no major increase in costs or prices for consumers, individual industries, federal, state, or local government agencies, or geographic regions. There will be no significant adverse effects on competition, employment, investment, productivity, innovation, or on the ability of United States-based enterprises to compete with foreign-based enterprises in domestic or export markets.

This rule change will not impose a burden under the Paperwork Reduction Act of 1980, 44 U.S.C. 3501 *et. seq*., since no significant additional record keeping or reporting requirements are placed upon the public. In fact, some paperwork, especially that related to foreign filing license petitions, will be reduced.

List of Subjects in 37 CFR Parts 1 and 5

Administrative practice and procedure, Courts, Inventions and patents.

Notice is hereby given that, pursuant to the authority granted to the Commissioner of Patents and Trademarks by 35 U.S.C. 6 and Public Law 97-247, the Patent and Trademark Office is amending Title 37 of the Code of Federal Regulations as set forth below.

37 CFR, Parts 1 and 5, are amended as follows:

1. Section 1.4 is amended by revising paragraph (a) to read as follows:

§1.4 Nature of correspondence.

(a) Correspondence with the Patent and Trademark Office comprises: (1) correspondence relating to services and facilities of the Office, such as general inquiries, requests for publications supplied by the Office, orders for printed copies of patents or trademark registrations, orders for copies of records, transmission of assignments for recording, and the like, and (2) correspondence in and relating to a particular application or other proceeding in the Office. See particularly the rules relating to the filing, processing, or other proceedings of national applications in Subpart B, §§1.31 to 1.352; of international applications in Subpart C, §§1.401 to 1.482; of reexamination of patents in Subpart D, §§1.501 to 1.570; and of trademark applications, §§2.11 to 2.189.

* * * * *

2. Section 1.6 is revised to read as follows:

§1.6 Receipt of letters and papers.

(a) Letters and other papers received in the Patent and Trademark Office are stamped with the date of receipt. No papers are received in the Patent and Trademark Office on Saturdays, Sundays or federal holidays within the District of Columbia.

(b) Mail placed in the Patent and Trademark Office pouch up to midnight on weekdays, excepting Saturdays and federal holidays, by the post office at Washington, D. C., serving the Patent and Trademark Office, is considered as having been received in the Patent and Trademark Office on the day it was so placed in the pouch.

(c) In addition to being mailed or delivered by hand during office hours, letters and other papers may be deposited up to midnight in a box provided at the guard's desk at the lobby of building 3 of the Patent and Trademark Office at Crystal Plaza, Arlington, Virginia and at the main entrance (14th Street) of the Department of Commerce Building, Washington, D. C., on weekdays except Saturdays and federal holidays, and all papers deposited therein are considered as received in the Patent and Trademark Office on the day of deposit.

(d) If interruptions or emergencies in the United States Postal Service which have been so designated by the Commissioner occur, the Patent and Trademark Office will consider as filed on a particular date in the Office any paper or fee which is (1) promptly filed after the ending of the designated interruption or emergency and (2) accompanied by a statement indicating that such paper or fee would have been filed on that particular date if it were not for the designated interruption or emergency in the United States Postal Service. Such statement must be a verified statement if made by a person not registered to practice before the Patent and Trademark Office.

3. Section 1.7 is revised to read as follows:

§1.7 Times for taking action: Expiration on Saturday, Sunday or federal holiday.

Whenever periods of time are specified in this part in days, calendar days are intended. When the day, or the last day fixed by statute or by or under this part for taking any action or paying any fee in the Patent and Trademark Office falls on Saturday, Sunday, or on a federal holiday within the District of Columbia, the action may be taken, or the fee paid, on the next succeeding day which is not a Saturday, Sunday, or a federal holiday. See §1.304 for time for appeal or for commencing civil action.

4. Section 1.8 is amended by revising the introductory text of paragraph (a) and paragraph (a)(1), (a)(2) introductory text, and (a)(2)(i) to read as follows:

§1.8 Certificate of mailing.

(a) Except in the cases enumerated below, papers and fees required to be filed in the Patent and Trademark Office within a set period of time will be considered as being timely filed if: (1) they are addressed to the Commissioner of Patents and Trademarks, Washington, D. C. 20231, and deposited with the U.S. Postal Service with sufficient postage as first class mail prior to expiration of the set period, and (2) they also include a certificate for each paper or fee stating the date of deposit. The person signing the certificate should have reasonable basis to expect that the correspondence would be mailed on or before the date indicated. The actual date of receipt of the paper or fee will be used for all other purposes. This procedure does not apply to the following:

(i) The filing of a national patent application specification and drawing or other papers for the purpose of obtaining an application filing date;

* * * * *

5. A new section 1.10 is added to read as follows:

§1.10 Filing of papers and fees by "Express Mail" with certificate.

(a) Any paper or fee to be filed in the Patent and Trademark Office can be filed utilizing the "Express Mail Post Office to Addressee" service of the United States Postal Service and be considered as having been filed in the Office on the date the paper or fee is shown to have been deposited as "Express Mail" with the United States Postal Service.

(b) Any paper or fee filed by "Express Mail" must have the number of the "Express Mail" mailing label placed thereon prior to mailing, be addressed to the Commissioner of Patents and Trademarks, Washington, D.C. 20231, and any such paper or fee must also include a certificate of mailing by "Express Mail" which states the date of mailing by "Express Mail" and is signed by the person mailing the paper or fee.

(c) The Patent and Trademark Office will accept the certificate of mailing by "Express Mail" and accord the paper or fee the certificate date under 35 U.S.C. 21(a) without further proof of the date on which the mailing by "Express Mail" occurred unless a question is present regarding the date of mailing. If more than a reasonable time has elapsed between the certificate date and the Patent and Trademark Office receipt date or if other questions regarding the date of mailing are present, the person mailing the paper or fee may be required to file a copy of the "Express Mail" receipt showing the actual date of mailing and a statement from the person who mailed the paper or fee averring to the fact that the mailing occurred on the date certified. Such statement must be a verified statement if made by a person not registered to practice before the Patent and Trademark Office.

6. Section 1.17 is amended by revising paragraph (h) to read as follows:

§1.17 Patent application processing fees.

* * * * *

(h) For filing a petition to the Commissioner under a section of this part listed below which refers to this paragraph--$120.00

--§1.47--for filing by other than all the inventors or a person not the inventor
--§1.48--for correction of inventorship
--§1.182-for decision on questions not specifically provided for
--§1.183-to suspend the rules
--§1.268-for late filing of interference settlement agreement

* * * * *

7. Section 1.22 is revised to read as follows:

§1.22 Fees payable in advance.

(a) Patent and trademark fees and charges payable to the Patent and Trademark Office are required to be paid in advance, that is, at the time of requesting any action by the Office for which a fee or charge is payable with the exception that under §1.53 applications for patent may be assigned a filing date without payment of the basic filing fee.

(b) All patent and trademark fees paid to the Patent and Trademark Office should be itemized in each individual application, patent or other proceeding in such a manner that it is clear for which purpose the fees are paid.

8. Section 1.24 is revised to read as follows:

§1.24 Coupons.

Coupons in denominations of one dollar are sold by the Patent and Trademark Office for the convenience of regular purchasers of U.S. patents and trademark registrations; these coupons may not be used for any other purpose. The one dollar coupons are sold individually and in books of 50 with stubs for record for $50. These coupons are good until used; they may be transferred but cannot be redeemed.

9. Section 1.41 is revised to read as follows:

§1.41 Applicant for patent.

(a) A patent must be applied for in the name of the actual inventor or inventors. Full names must be stated, including the family name and at least one given name without abbreviation together with any other given name or initial.

(b) Unless the contrary is indicated the word "applicant" when used in these sections refers to the inventor or joint inventors who are applying for a patent, or to the person mentioned in §§1.42, 1.43, or 1.47 who is applying for a patent in place of the inventor.

(c) Any person authorized by the applicant may file an application for patent on behalf of the inventor or inventors, but an oath or declaration for the application (§1.63) can only be made in accordance with §1.64.

(d) A showing may be required from the person filing the application that the filing was authorized where such authorization comes into question.

10. Section 1.42 is revised to read as follows:

§1.42 When the inventor is dead.

In case of the death of the inventor, the legal representative (executor, administrator, etc.) of the deceased inventor may make the necessary oath or declaration, and apply for and obtain the patent. Where the inventor dies during the time intervening between the filing of the application and the granting of a patent thereon, the letters patent may be issued to the legal representative upon proper intervention.

11. Section 1.43 is revised to read as follows:

§1.43 When the inventor is insane or legally incapacitated.

In case an inventor is insane or otherwise legally incapacitated, the legal representative (guardian, conservator, etc.) of such inventor may make the necessary oath or declaration, and apply for and obtain the patent.

12. Section 1.45 is amended by removing paragraphs (b) and (c) and the designation (a) to the first paragraph and by revising the text to read as follows:

§1.45 Joint inventors.

Joint inventors must apply for a patent jointly and each must make the required oath or declaration: neither of them alone, nor less than the entire number, can apply for a patent for an invention invented by them jointly, except as provided in §1.47.

13. Section 1.46 is revised to read as follows:

§1.46 Assigned inventions and patents.

In case the whole or a part interest in the invention or in the patent to be issued is assigned, the application must still be made or authorized to be made, and an oath or declaration signed, by the inventor or one of the persons mentioned in §§1.42, 1.43, or 1.47. However, the patent may be issued to the assignee or jointly to the inventor and the assignee as provided in §1.334.

14. Section 1.47 is revised to read as follows:

§1.47 Filing when an inventor refuses to sign or cannot be reached.

(a) If a joint inventor refuses to join in an application for patent or cannot be found or reached after diligent effort, the application may be made by the other inventor on behalf of himself or herself and the omitted inventor. The oath or declaration in such an application must be accompanied by a petition including proof of the pertinent facts and by the required fee (§1.17(h)) and must state the last known address of the omitted inventor. The Patent and Trademark Office shall forward notice of the filing of the application to the omitted inventor at said address. Should such notice be returned to the Office undelivered, or should the address of the omitted inventor be unknown, notice of the filing of the application shall be published in the Official Gazette. The omitted inventor may subsequently join in the application on filing an oath or declaration of the character required by §1.63. A patent may be granted to the inventor making the application, upon a showing satisfactory to the Commissioner, subject to the same rights which the omitted inventor would have had if he or she had been joined.

(b) Whenever an inventor refuses to execute an application for patent, or cannot be found or reached after diligent effort, a person to whom the inventor has assigned or agreed in writing to assign the invention or who otherwise shows sufficient proprietary interest in the matter justifying such action may make application for patent on behalf of and as agent for the inventor. The oath or declaration in such an application must be accompanied by a petition including proof of the pertinent facts and a showing that such action is necessary to preserve the rights of the parties or to prevent irreparable damage, and by the required fee (§1.17(h)) and must state the last known address of the inventor. The assignment, written agreement to assign or other evidence of proprietary interest, or a verified copy thereof, must be filed in the Patent and Trademark Office. The Office shall forward notice of the filing of the application to the inventor at the address stated in the application. Should such notice be returned to the Office undelivered, or should the address of the inventor be unknown, notice of the filing of the application shall be published in the Official Gazette. The inventor may subsequently join in the application on filing an oath or declaration of the character required by §1.63. A patent may be granted to the inventor upon a showing satisfactory to the Commissioner.

15. A new section 1.48 is added to read as follows:

§1.48 Correction of inventorship.

If the correct inventor or inventors are not named in an application for patent through error without any deceptive intention on the part of the actual inventor or inventors, the application may be amended to name only the actual inventor or inventors. Such amendment must be diligently made and must be accompanied by (1) a petition including a statement of facts verified by the original named inventor or inventors establishing when the error without deceptive intention was discovered and how it occurred; (2) an oath or declaration by each actual inventor or inventors as required by §1.63; (3) the fee set forth in §1.17(h); and (4) the written consent of any assignee.

16. Section 1.51 is amended by revising paragraphs 1.51(a)(2) and (b) to read as follows:

§1.51 General requisites of a complete application.

(a) * * *

(2) An oath or declaration, see §§1.63 and 1.68.

* * *

(b) Applicants are encouraged to file an information disclosure statement. See §§1.97 through 1.99.

17. Section 1.52 is amended by revising paragraph (c) to read as follows:

§1.52 Language, paper, writing, margins.

* * * * *

(c) Any interlineation, erasure, cancellation or other alteration of the application papers filed must be made before the signing of any accompanying oath or declaration pursuant to §1.63 referring to those application papers and should be dated and initialed or signed by the applicant on the same sheet of paper. No such alterations in the application papers are permissible after the signing of an oath or declaration referring to those application papers (§1.56(c)). After the signing of the

oath or declaration referring to the application papers, amendments may only be made in the manner provided by §§1.121 and 1.123-1.125.

* * * * *

18. Section 1.53 is revised to read as follows:

§1.53 Serial number, filing date, and completion of application.

(a) Any application for a patent received in the Patent and Trademark Office will be assigned a serial number for identification purposes.

(b) The filing date of an application for patent is the date on which (1) a specification containing a description pursuant to §1.71 and at least one claim pursuant to §1.75, and (2) any drawing required by §1.81(a), are filed in the Patent and Trademark Office. No new matter may be introduced into an application after its filing date (§1.118).

(c) If any application is filed without the specification or drawing required by paragraph (b) of this section, applicant will be so notified and given a time period within which to submit the omitted specification or drawing in order to obtain a filing date as of the date of filing of such submission. If the omission is not corrected within the time period set, the application will be returned or otherwise disposed of; the fee, if submitted, will be refunded less a $50.00 handling fee.

(d) If an application which has been accorded a filing date pursuant to paragraph (b) of this section does not include the appropriate filing fee or an oath or declaration by the applicant, applicant will be so notified and given a period of time within which to file the fee, oath, or declaration and to pay the surcharge as set forth in §1.16(e) in order to prevent abandonment of the application. The notification pursuant to this paragraph may be made simultaneously with any notification pursuant to paragraph (c) of this section.

(e) An application for a patent will not be placed upon the files for examination until all its required parts, complying with the rules relating thereto, are received, except that certain minor informalities may be waived subject to subsequent correction whenever required.

(f) The filing date of an international application designating the United States of America shall be treated as the filing date in the United States of America under PCT Article 11(3), except as provided in 35 U.S.C. 102(e).

19. Section 1.54 is revised to read as follows:

§1.54 Parts of application to be filed together; filing receipt.

(a) It is desirable that all parts of the complete application be deposited in the Office together; otherwise a letter must accompany each part, accurately and clearly connecting it with

the other parts of the application. See §1.53 with regard to completion of an application.

(b) Applicant will be informed of the application serial number and filing date by a filing receipt.

20. Section 1.55 is revised to read as follows:

§1.55 Claim for foreign priority.

(a) An applicant may claim the benefit of the filing date of a prior foreign application under the conditions specified in 35 U.S.C. 119 and 172. The claim to priority need be in no special form and may be made by the attorney or agent if the foreign application is referred to in the oath or declaration as required by §1.63. The claim for priority and the certified copy of the foreign application specified in the second paragraph of 35 U.S.C. 119 must be filed in the case of interference (§1.224); when necessary to overcome the date of a reference relied upon by the examiner; or when specifically required by the examiner; and in all other cases they must be filed not later than the date the issue fee is paid. If the papers filed are not in the English language, a translation need not be filed except in the three particular instances specified in the preceding sentence, in which event a sworn translation or a translation certified as accurate by a sworn or official translator must be filed. If the priority papers are submitted after the date the issue fee is paid, they must be accompanied by a petition requesting their entry and the fee set forth in §1.17(i).

(b) An applicant may under certain circumstances claim priority on the basis of an application for an inventor's certificate in a country granting both inventor's certificates and patents. When an applicant wishes to claim the right of priority as to a claim or claims of the application on the basis of an application for an inventor's certificate in such a country under 35 U.S.C. 119, last paragraph (as amended July 28, 1972), the applicant or his attorney or agent, when submitting a claim for such right as specified in paragraph (b) of this section, shall include an affidavit or declaration including a specific statement that, upon an investigation, he or she has satisfied himself or herself that to the best of his or her knowledge the applicant, when filing his or her application for the inventor's certificate, had the option to file an application either for a patent or an inventor's certificate as to the subject matter of the identified claim or claims forming the basis for the claim of priority.

21. Section 1.56 is amended by revising paragraph (c) to read as follows:

§1.56 Duty of disclosure; fraud; striking or rejection of applications.

* * * * *

(c) Any application may be stricken from the files if:

(1) An oath or declaration pursuant to §1.63 is signed in

blank;

(2) An oath or declaration pursuant to §1.63 is signed without review thereof by the person making the oath or declaration;

(3) An oath or declaration pursuant to §1.63 is signed without review of the specification, including the claims, as required by §1.63(b);

or

(4) The application papers filed in the Office are altered after the signing of an oath or declaration pursuant to §1.63 referring to those application papers.

* * * * *

§1.57 [Removed]

22. Section 1.57 is removed.

23. Section 1.59 is revised to read as follows:

§1.59 Papers of application with filing date not to be returned.

Papers in an application which has received a filing date pursuant to §1.53 will not be returned for any purpose whatever. If applicants have not preserved copies of the papers, the Office will furnish copies at the usual cost.

24. Section §1.60 is revised to read as follows:

§1.60 Continuation or divisional application for invention disclosed in a prior application.

A continuation or divisional application (filed under the conditions specified in 35 U.S.C. 120 or 121), which discloses and claims only subject matter disclosed in a prior application may be filed as a separate application before the patenting or abandonment of or termination of proceedings on the prior application. Signing and execution of the application papers by the applicant may be omitted provided the copy is supplied by and accompanied by a statement by, the applicant or his or her attorney or agent that the application papers comprise a true copy of the prior application as filed. Such statement must be a verified statement if made by a person not registered to practice before the Patent and Trademark Office. Only amendments reducing the number of claims or adding a reference to the prior application (§1.78(a)) will be entered before calculating the filing fee and granting the filing date.

25. Section §1.62 is revised to read as follows:

§1.62 File wrapper continuing procedure.

(a) A continuation, continuation-in-part, or divisional application, which uses the specification and drawings from a

prior application to be abandoned, may be filed before the payment of the issue fee, abandonment of, or termination of proceedings on a prior application. The filing date of an application filed under this section is the date on which a request is filed for an application under this section including identification of the Serial Number, filing date, and applicant's name of the prior application.

(b) The filing fee for a continuation, continuation-in-part, or divisional application under this section is based on the number of claims remaining in the application after entry of any preliminary amendment and entry of any amendments under §1.116 unentered in the prior application which applicant has requested to be entered in the continuing application.

(c) In the case of a continuation-in-part application which adds and claims additional disclosure by amendment, an oath or declaration as required by §1.63 must also be filed. In a continuation or divisional application which discloses and claims only subject matter disclosed in a prior application, no additional oath or declaration is required.

(d) If an application which has been accorded a filing date pursuant to paragraph (a) of this section does not include the appropriate filing fee pursuant to paragraph (b) of this section, or an oath or declaration by the applicant in the case of a continuation-in-part application pursuant to paragraph (c) of this section, applicant will be so notified and given a period of time within which to file the fee, oath, or declaration and to pay the surcharge as set forth in §1.16(e) in order to prevent abandonment of the application. The notification pursuant to this paragraph may be made simultaneously with any notification of a defect pursuant to paragraph (a) of this section.

(e) An application filed under this section will utilize the file wrapper and contents of the prior application to constitute the new continuation, continuation-in-part, or divisional application but will be assigned a new application serial number.

(f) The filing of an application under this section will be construed to include a waiver of secrecy by the applicant under 35 U.S.C. 122 to the extent that any member of the public who is entitled under the provisions of 37 CFR 1.14 to access to, or information concerning either the prior application or any continuing application filed under the provisions of this section may be given similar access to, or similar information concerning, the other application(s) in the file wrapper.

(g) The filing of a request for a continuing application under this section will be considered to be a request to expressly abandon the prior application as of the filing date granted the continuing application.

(h) The applicant is urged to furnish the following information relating to the prior application to the best of his or her ability:

(1) Title as originally filed and as last amended;

(2) Name of applicant as originally filed and as last amended;

(3) Current correspondence address of applicant;

(4) Identification of prior foreign application and any priority claim under 35 U.S.C. 119.

(i) Envelopes containing only application papers and fees for filing under this section should be marked "Box FWC".

26. A new section 1.63 is added to read as follows:

§1.63 Oath or declaration.

(a) An oath or declaration filed under §1.51(a)(2) as a part of an application must:

(1) Be executed in accordance with either §1.66 or §1.68;

(2) Identify the specification to which it is directed;

(3) Identify each inventor and the residence and country of citizenship of each inventor; and

(4) State whether the inventor is a sole or joint inventor of the invention claimed.

(b) In addition to meeting the requirements of paragraph (a), the oath or declaration must state that the person making the oath or declaration:

(1) Has reviewed and understands the contents of the specification, including the claims, as amended by any amendment specifically referred to in the oath or declaration;

(2) Believes the named inventor or inventors to be the original and first inventor or inventors of the subject matter which is claimed and for which a patent is sought; and

(3) Acknowledges the duty to disclose information which is material to the examination of the application in accordance with §1.56(a).

(c) In addition to meeting the requirements of paragraphs (a) and (b) of this section, the oath or declaration in any application in which a claim for foreign priority is made pursuant to §1.55 must identify the foreign application for patent or inventor's certificate on which priority is claimed, and any foreign application having a filing date before that of the application on which priority is claimed, by specifying the application number, country, day, month and year of its filing.

(d) In any continuation-in-part application filed under the conditions specified in 35 U.S.C. 120 which discloses and claims subject matter in addition to that disclosed in the prior

copending application, the oath or declaration must also state that the person making the oath or declaration acknowledges the duty to disclose material information as defined in §1.56(a) which occurred between the filing date of the prior application and the national or PCT international filing date of the continuation-in-part application.

27. A new section 1.64 is added to read as follows:

§1.64 Person making oath or declaration.

(a) The oath or declaration must be made by all of the actual inventors except as provided for in §§1.42, 1.43, or 1.47.

(b) If the person making the oath or declaration is not the inventor (§§1.42, 1.43, or 1.47), the oath or declaration shall state the relationship of the person to the inventor and, upon information and belief, the facts which the inventor is required to state.

§1.65 [Removed]

28. Section 1.65 is removed.

29. Section 1.67 is revised to read as follows:

§1.67 Supplemental oath or declaration.

(a) A supplemental oath or declaration meeting the requirements of §1.63 may be required to be filed to correct any deficiencies or inaccuracies present in an earlier filed oath or declaration.

(b) A supplemental oath or declaration meeting the requirements of §1.63 must be filed (1) when a claim is presented for matter originally shown or described but not substantially embraced in the statement of invention or claims originally presented, and (2) when an oath or declaration submitted in accordance with §1.53(d) after the filing of the specification and any required drawings specifically and improperly refers to an amendment which includes new matter. No new matter may be introduced into an application after its filing date even if a supplemental oath or declaration is filed (§1.53(b); §1.118). In proper cases the oath or declaration here required may be made on information and belief by an applicant other than inventor.

30. Section 1.69 is amended by revising paragraph (b) to read as follows:

§1.69 Foreign language oaths and declarations.

* * * * *

(b) Unless the text of any oath or declaration in a language other than English is a form provided or approved by the Patent and Trademark Office, it must be accompanied by a verified English translation, except that in the case of an oath or declaration filed under §1.63, the translation may be filed in

the Office no later than two months from the date applicant is notified to file the translation.

31. Section 1.70 is amended by revising the title and paragraph (a) to read as follows:

§1.70 Oath or declaration under 35 U.S.C. 371(c)(4).

(a) When an applicant of an international application, if the inventor, desires to enter the national stage under 35 U.S.C. 371, he or she must file an oath or declaration in accordance with §1.63.

* * * * *

32. Section 1.77 is amended by revising paragraphs (h) and (i) to read as follows:

§1.77 Arrangement of application elements.

* * * * *

(h) Abstract of the disclosure.
(i) Signed oath or declaration.

* * * * *

33. The center heading preceding §1.97 and section 1.97 are revised to read as follows:

INFORMATION DISCLOSURE STATEMENT

§1.97 Filing of information disclosure statement.

(a) As a means of complying with the duty of disclosure set forth in §1.56, applicants are encouraged to file an information disclosure statement at the time of filing the application or within the later of three months after the filing date of the application or two months after applicant receives the filing receipt. If filed separately, the disclosure statement should, in addition to the identification of the application, include the Group Art Unit to which the application is assigned as indicated on the filing receipt. The disclosure statement may either be separate from the specification or may be incorporated therein.

(b) A disclosure statement filed in accordance with paragraph (a) of this section shall not be construed as a representation that a search has been made or that no other material information as defined in §1.56(a) exists.

34. Section 1.98 is amended by revising the title and paragraph (a) to read as follows:

§1.98 Content of information disclosure statement.

(a) Any disclosure statement filed under §1.97 or §1.99 shall include: (1) A listing of patents, publications or other information and (2) a concise explanation of the relevance of each listed item. The disclosure statement shall be accompanied by a copy of each listed patent or publication or other item of information in written form or of at least the portions thereof considered by the person filing the disclosure statement to be pertinent. All United States patents listed should be identified by their patent numbers, patent dates and names of the patentees. Each foreign published application or patent should be cited by identifying the country or office which issued it, the document number and publication date indicated on the document. Each printed publication should be identified by author (if any), title of the publication, pages, date and place of publication.

* * * * *

35. Section 1.99 is revised to read as follows:

§1.99 Updating of information disclosure statement.

If prior to issuance of a patent an applicant, pursuant to his or her duty of disclosure under §1.56, wishes to bring to the attention of the Office additional patents, publications or other information not previously submitted, the additional information should be submitted to the Office with reasonable promptness. It may be included in a supplemental information disclosure statement or may be incorporated into other communications to be considered by the examiner. Any transmittal of additional information shall be accompanied by explanations of relevance and by copies in accordance with the requirements of §1.98.

36. Section 1.101 is amended by revising paragraph (a) to read as follows:

§1.101 Order of examination.

(a) Applications filed in the Patent and Trademark Office and accepted as complete applications are assigned for examination to the respective examining groups having the classes of inventions to which the applications relate. Applications shall be taken up for examination by the examiner to whom they have been assigned in the order in which they have been filed except for those applications in which examination has been advanced pursuant to §1.102 and those applications in which the Office has accepted a request for waiver of patent rights filed under §1.139. International applications which have complied with the requirements of 35 U.S.C. 371(c) will be taken up for action based on the date on which such requirements were met. However, unless a request has been filed under 35 U.S.C. 371(f), no action may be taken prior to 21 months from the priority date.

* * * * *

37. Section 1.118 is revised to read as follows:

§1.118 Amendment of disclosure.

(a) No amendment shall introduce new matter into the disclosure of an application after the filing date of the application (§1.53(b)). All amendments to the specification, including the

claims, and the drawings filed after the filing date of the application must conform to at least one of them as it was at the time of the filing of the application. Matter not found in either, involving a departure from or an addition to the original disclosure, cannot be added to the application after its filing date even though supported by an oath or declaration in accordance with §1.63 or §1.67 filed after the filing date of the application.

(b) If it is determined that an amendment filed after the filing date of the application introduces new matter, claims containing new matter will be rejected and deletion of the new matter in the specification and drawings will be required even if the amendment is accompanied by an oath or declaration in accordance with §1.63 or §1.67.

38. Section 1.123 is revised to read as follows:

§1.123 Amendments to the drawing.

No change in the drawing may be made except by permission of the Office. Permissible changes in the construction shown in any drawing may be made only by bonded draftsmen, at applicant's expense, or by the submission of substitute drawings by applicant. A sketch in permanent ink showing proposed changes, to become part of the record, must be filed for approval by the examiner. The paper requesting amendments to the drawing should be separate from other papers.

39. Section 1.125 is revised to read as follows:

§1.125 Substitute specification.

If the number or nature of the amendments shall render it difficult to consider the case, or to arrange the papers for printing or copying, the examiner may require the entire specification, including the claims, or any part thereof, to be rewritten. A substitute specification may not be accepted unless it has been required by the examiner or unless it is clear to the examiner that acceptance of a substitute specification would facilitate processing of the application. Any substitute specification filed must be accompanied by a statement that the substitute specification includes no new matter. Such statement must be a verified statement if made by a person not registered to practice before the Office.

40. Section 1.131 is amended by revising paragraph (a) to read as follows:

§1.131 Affidavit or declaration of prior invention to overcome cited patent or publication.

(a) When any claim of an application or a patent under reexamination is rejected on reference to a domestic patent which substantially shows or describes but does not claim the rejected invention, or on reference to a foreign patent or to a printed publication, and the applicant or the owner of the patent under reexamination shall make oath or declaration as to facts showing

a completion of the invention in this country before the filing date of the application on which the domestic patent issued, or before the date of the foreign patent, or before the date of the printed publication, then the patent or publication cited shall not bar the grant of a patent to the applicant or the confirmation of the patentability of the claims of the patent, unless the date of such patent or printed publication is more than one year prior to the date on which the applicant's or patent owner's application was filed in this country.

* * * * *

41. Section 1.132 is revised to read as follows:

§1.132 Affidavits or declarations traversing grounds of rejection.

When any claim of an application or a patent under reexamination is rejected on reference to a domestic patent which substantially shows or describes but does not claim the invention, or on reference to a foreign patent, or to a printed publication, or to facts within the personal knowledge of an employee of the Office, or when rejected upon a mode or capability of operation attributed to a reference, or because the alleged invention is held to be inoperative or lacking in utility, or frivolous or injurious to public health or morals, affidavits or declarations traversing these references or objections may be received.

42. Section 1.137 is amended by revising paragraph (b) to read as follows:

§1.137 Revival of abandoned application.

* * * * *

(b) An application unintentionally abandoned for failure to prosecute, except pursuant to §1.53(d), may be revived as a pending application if the delay was unintentional. A petition to revive an unintentionally abandoned application must be filed within one year of the date on which the application became abandoned or be filed within three months of the date of the first decision on a petition to revive under paragraph (a) of this section which was filed within one year of the date of abandonment of the application. A petition to revive an unintentionally abandoned application must be accompanied by (1) a statement that the abandonment was unintentional, (2) a proposed response unless it has been previously filed, and (3) a petition fee as set forth in §1.17(m). Such statement must be a verified statement if made by a person not registered to practice before the Patent and Trademark Office. The Commissioner may require additional information where there is a question whether the abandonment was unintentional. The three month period set forth in this paragraph may be extended under the provisions of §1.136(a), but no further extensions under §1.136(b) will be granted. Petitions to the Commissioner under §1.183 to waive any time periods for requesting revival of an unintentionally abandoned application will not be considered, but will be returned to the applicant.

* * * * *

43. Section 1.153 is amended by revising paragraph (b) to read as follows:

§1.153 Title, description and claim, oath or declaration.

* * * * *

(b) The oath or declaration required of the applicant must comply with §1.63.

44. Section 1.154 is amended by revising paragraph (e) to read as follows:

§1.154 Arrangement of specification.

* * * * *

(e) Signed oath or declaration (See §1.153(b)).

45. Section 1.162 is revised to read as follows:

§1.162 Applicant, oath or declaration.

The applicant for a plant patent must be the person who has invented or discovered and asexually reproduced the new and distinct variety of plant for which a patent is sought (or as provided in §§1.42, 1.43, and 1.47). The oath or declaration required of the applicant, in addition to the averments required by §1.63, must state that he or she has asexually reproduced the plant. Where the plant is a newly found plant the oath or declaration must also state that it was found in a cultivated area.

46. Section 1.163 is amended by revising paragraph (b) to read as follows:

§1.163 Specification.

* * * * *

(b) Two copies of the specification (including the claim) must be submitted, but only one signed oath or declaration is required. The second copy of the specification may be a legible carbon copy of the original.

47. Section 1.172 is amended by revising paragraph (a) to read as follows:

§1.172 Applicants, assignees.

(a) A reissue oath must be signed and sworn to or declaration made by the inventor or inventors except as otherwise provided (see §§1.42, 1.43, 1.47), and must be accompanied by the written

assent of all assignees, if any, owning an undivided interest in the patent, but a reissue oath may be made and sworn to or declaration made by the assignee of the entire interest if the application does not seek to enlarge the scope of the claims of the original patent.

* * * * *

48. Section 1.174 is amended by revising paragraph (a) to read as follows:

§1.174 Drawings.

(a) The drawings upon which the original patent was issued may be used in reissue applications if no changes whatsoever are to be made in the drawings. In such cases, when the reissue application is filed, the applicant must submit a temporary drawing which may consist of a copy of the printed drawings of the patent or a photoprint of the original drawings of the size required for original drawing.

* * * * *

49. Section 1.175 is amended by revising the introductory text of paragraph (a) to read as follows:

§1.175 Reissue oath or declaration.

(a) Applicants for reissue, in addition to complying with the requirements of §1.63, must also file with their applications a statement under oath or declaration as follows:

* * * * *

50. Section 1.324 is revised to read as follows:

§1.324 Correction of inventorship in patent.

Whenever a patent is issued and it appears that the correct inventor or inventors were not named through error without deceptive intention on the part of the actual inventor or inventors, the Commissioner may, on petition of all the parties and the assignees and satisfactory proof of the facts and payment of the fee set forth in §1.20(b), or on order of a court before which such matter is called in question, issue a certificate naming only the actual inventor or inventors.

51. Section 1.325 is revised to read as follows:

§1.325 Other mistakes not corrected.

Mistakes other than those provided for in §§1.322, 1.323, 1.324, and not affording legal grounds for reissue or for reexamination, will not be corrected after the date of the patent.

52. A new §1.335 is added to read as follows:

§1.335 Filing of notice of arbitration awards.

(a) Written notice of any award by an arbitrator pursuant to 35 U.S.C. 294 must be filed in the Patent and Trademark Office by the patentee, or the patentee's assignee or licensee. If the award involves more than one patent a separate notice must be filed for placement in the file of each patent. The notice must set forth the patent number, the names of the inventor and patent owner, and the names and addresses of the parties to the arbitration. The notice must also include a copy of the award.

(b) If an award by an arbitrator pursuant to 35 U.S.C. 294 is modified by a court, the party requesting the modification must file in the Patent and Trademark Office, a notice of the modification for placement in the file of each patent to which the modification applies. The notice must set forth the patent number, the names of the inventor and patent owner, and the names and addresses of the parties to the arbitration. The notice must also include a copy of the court's order modifying the award.

(c) Any award by an arbitrator pursuant to 35 U.S.C. 294 shall be unenforceable until any notices required by paragraph (a) or (b) of this section are filed in the Patent and Trademark Office. If any required notice is not filed by the party designated in paragraph (a) or (b) of this section, any party to the arbitration proceeding may file such a notice.

53. Section 5.12 is revised to read as follows:

§5.12 Petition for license.

(a) Filing of an application for patent for inventions made in the United States will be considered to include a petition for license under 35 U.S.C. 184 for the subject matter of the application. The filing receipt will indicate if a license is granted. If the initial automatic petition is not granted, a subsequent petition may be filed under paragraph (b) of this section.

(b) Petitions for license under 35 U.S.C. 184 should be presented in letter form and should include petitioner's address, and full instructions for delivery of the requested license when it is to be delivered to other than the petitioner.

Dec. 23, 1982
Date

Gerald J. Mossinghoff
Gerald J. Mossinghoff
Commissioner of Patents and Trademarks

Reference Collections of U.S. Patents Available for Public Use in Patent Depository Libraries

The libraries listed herein, designated as patent depository libraries, receive current issues of U.S. Patents and maintain collections of earlier issued patents. The scope of these collections varies from library to library, ranging from patents of only recent months or years in some libraries to all or most of the patents issued since 1870, or earlier, in other libraries.

These patent collections are open to public use and each of the patent depository libraries, in addition, offers the publications of the patent classification system (e.g. The Manual of Classification, Index to the U.S. Patent Classification, Classification Definitions, etc.) and provides technical staff assistance in their use to aid the public in gaining effective access to information contained in patents. With one exception, as noted in the table following, the collections are organized in patent number sequence.

Depending upon the library, the patents may be available in microfilm, in bound volumes of paper copies, or in some combination of both. Facilities for making paper copies from either microfilm in reader-printers or from the bound volumes in paper-to-paper copies are generally provided for a fee.

Owing to variations in the scope of patent collections among the patent depository libraries and in their hours of service to the public, anyone contemplating use of the patents at a particular library is advised to contact that library, in advance, about its collection and hours, so as to avert possible inconvenience.

State	*Name of Library*	*Telephone Contact*
Alabama	Birmingham Public Library	(205) 254-2555
Arizona	Tempe: Science Library, Arizona State University	(602) 965-7607
California	Los Angeles Public Library	(213) 626-7555 Ext. 273
	Sacramento: California State Library	(916) 322-4572
	Sunnyvale: Patent Information Clearinghouse*	(408) 738-5580
Colorado	Denver Public Library	(303) 571-2122
Delaware	Newark: University of Delaware	(302) 738-2238
Georgia	Atlanta: Price Gilbert Memorial Library, Georgia Institute of Technology	(404) 894-4508
Illinois	Chicago Public Library	(312) 269-2865
Louisiana	Baton Rouge: Troy H. Middleton Library, Louisiana State University	(504) 388-2570
Massachusetts	Boston Public Library	(617) 536-5400 Ext. 265
Michigan	Detroit Public Library	(313) 833-1450
Minnesota	Minneapolis Public Library & Information Center	(612) 372-6552
Missouri	Kansas City: Linda Hall Library	(816) 363-4600
	St. Louis Public Library	(314) 241-2288 Ext. 214, Ext. 215
Nebraska	Lincoln: University of Nebraska-Lincoln, Engineering Library	(402) 472-3411
New Hampshire	Durham: University of New Hampshire Library	(603) 862-1777
New Jersey	Newark Public Library	(201) 733-7814
New York	Albany: New York State Library	(518) 474-5125
	Buffalo and Erie County Public Library	(716) 856-7525 Ext. 267
	New York Public Library (The Research Libraries)	(212) 930-0850
North Carolina	Raleigh: D. H. Hill Library, N.C. State University	(919) 737-3280
Ohio	Cincinnati & Hamilton County, Public Library of	(513) 369-6936
	Cleveland Public Library	(216) 623-2870
	Columbus: Ohio State University Libraries	(614) 422-6286
	Toledo/Lucas County Public Library	(419) 255-7055 Ext. 212
Oklahoma	Stillwater: Oklahoma State University Library	(405) 624-6546
Pennsylvania	Philadelphia: Franklin Institute Library	(215) 448-1321**
	Pittsburgh: Carnegie Library of Pittsburgh	(412) 622-3138
	University Park: Pattee Library, Pennsylvania State University	(814) 865-4861
Rhode Island	Providence Public Library	(401) 521-7722 Ext. 226
South Carolina	Charleston: Medical University of South Carolina	(803) 792-2372
Tennessee	Memphis & Shelby County Public Library and Information Center	(901) 528-2957
Texas	Dallas Public Library	(214) 748-9071
	Houston: The Fondren Library, Rice University	(713) 527-8101 Ext. 2587
Washington	Seattle: Engineering Library, University of Washington	(206) 543-0740
Wisconsin	Madison: Kurt F. Wendt Engineering Library, University of Wisconsin	(608) 262-6845
	Milwaukee Public Library	(414) 278-3043

All of the above-listed libraries, except the Cleveland Public Library, offer CASSIS (Classification And Search Support Information System), which provides direct, on-line access to Patent and Trademark Office data.

*Collection organized by subject matter.

**Call only between the hours of 10:00 a.m. and 5:00 p.m.

PATENT EXAMINING CORPS

RENE D. TEGTMEYER, Assistant Commissioner

WILLIAM FELDMAN, Deputy Assistant Commissioner

CONDITION OF PATENT APPLICATIONS AS OF November 27, 1982

PATENT EXAMINING GROUPS	Actual Filing Date of Oldest New Case Awaiting Action
CHEMICAL EXAMINING GROUPS	
GENERAL CHEMISTRY AND PETROLEUM CHEMISTRY, GROUP 110—D. E. TALBERT, Director .... Inorganic Compounds; Inorganic Compositions; Organo-Metal and Organo-Metalloid Chemistry; Metallurgy; Metallurgical Apparatus; Metal Stock; Electro Chemistry; Batteries; Hydrocarbons; Mineral Oil Technology; Lubricating Compositions; Gaseous Compositions; Fuel and Igniting Devices.	5-19-80
GENERAL ORGANIC CHEMISTRY, GROUP 120—C. E. VAN HORN, Director .... Heterocyclic Amides; Alkaloids; Azo; Sulfur; Misc. Esters; Carbohydrates; Herbicides; Poisons; Medicines; Cosmetics; Steroids; Oxo and Oxy; Quinones; Acids; Carboxylic Acid Esters; Acid Anhydrides; Acid Halides.	7-20-81
HIGH POLYMER CHEMISTRY, PLASTICS AND MOLDING, GROUP 140—J. O. THOMAS, JR., Director .... Synthetic Resins; Rubber; Proteins; Macromolecular Carbohydrates; Mixed Synthetic Resin Compositions; Synthetic Resins With Natural Polymers and Resins; Reclaiming; Pore-Forming; Compositions (Part) e.g., Coating; Molding; Ink; Prosthdontics; Adhesive and Abrading Compositions; Molding, Shaping, Treating Process, and Apparatus Therefor; Irradiation (Part); Bleaching; Dyeing; Leather, Fur and Textile Treating Compositions.	8-28-81
COATING, LAMINATING AND PHOTOGRAPHY, GROUP 160—S. N. ZAHARNA, Director .... Coating: Processes, Apparatus and Misc. Products; Laminating Methods and Apparatus; Stock Materials; Adhesive Bonding; Special Chemical Manufactures; Special Utility Compositions; and Photography.	12-18-81
SPECIALIZED CHEMICAL INDUSTRIES AND CHEMICAL ENGINEERING, GROUP 170— R. F. WHITE, Director .... Fertilizers; Foods; Fermentation; Analytical Chemistry; Reactors; Sugar and Starch; Paper Making; Glass Manufacture; Gas; Heating and Illuminating; Cleaning Processes; Liquid Purification; Distillation; Preserving; Liquid, Gas, and Solid Separation; Gas and Liquid Contact Apparatus; Refrigeration; Concentrative Evaporators; Mineral Oils Apparatus; Misc. Physical Processes.	10-06-81
ELECTRICAL EXAMINING GROUPS	
INDUSTRIAL ELECTRONICS, PHYSICS AND RELATED ELEMENTS, GROUP 210—S. W. ENGLE, Director Generation and Utilization; General Applications; Conversion and Distribution; Heating and Related Art Conductors; Switches; Photography; Motion Pictures; Horology; Acoustics; Recorders; Weighing Scales.	12-17-80
SPECIAL LAWS ADMINISTRATION, GROUP 220—KENNETH L. CAGE, Director .... Ordnance, Firearms and Ammunition; Lubrication; Illumination; Nuclear Reactors; Acoustics, Communications, Optics; Radar; Directional Radio; Torpedoes; Seismic Exploring; Cathode Ray Tube Circuitry; Cryptography; Laser Devices; Radioactive Materials; Powder Metallurgy, Rocket Fuels; Special, Fuel, Explosive and Thermic Compositions; Thermal and Photoelectric Batteries.	3-16-81
INFORMATION TRANSMISSION, STORAGE, AND RETRIEVAL, GROUP 230—EARL LEVY, Director ..... Communications; Multiplexing Techniques; Television; Facsimile; Data Processing, Computation and Conversion; Storage Devices and Related Arts.	11-24-80
RECEPTACLES, CLEANING, WINDING, AND MEASURING, GROUP 240— G. M. FORLENZA, Director .... Receptacles; Bearings; Joint Packing; Conduits; Switches; Presses; Plumbing Fixtures; Textile Spinning; Cleaning; Food Treating; Agitating; Centrifugal Separating; Geometrical Instruments; Sound Recording; Image Projectors; Web Feeding; Winding and Reeling; Cable Hoists; Measuring and Testing; Indicating; Fluent Material Handling; Shaft; Impellers; Rotary Fluid Motors.	2-02-81
ELECTRONIC COMPONENT SYSTEMS AND DEVICES, GROUP 250—S. S. MATTHEWS, Director .... Semi-Conductor and Space Discharge Systems and Devices; Electronic Component Circuits; Wave Transmission Lines and Networks; Optics; Radiant Energy; Measuring.	11-26-79
DESIGN, GROUP 290—KENNETH L. CAGE, Director .... Industrial Arts; Household, Personal and Fine Arts.	12-15-80
MECHANICAL EXAMINING GROUPS	
HANDLING AND TRANSPORTING MEDIA, GROUP 310—B. R. GRAY, Director .... Conveyors; Hoists; Elevators; Article Handling Implements; Store Service; Sheet Feeding; Dispensing; Fluid Sprinkling; Fire Extinguishers; Coin Handling; Check Controlled Apparatus; Classifying and Assorting Solids; Boats; Ships; Aeronautics; Motor and Land Vehicles and Appurtenances; Brakes; Railways and Railway Equipment.	2-26-81
MATERIAL SHAPING, ARTICLE MANUFACTURING, TOOLS, GROUP 320—M. M. NEWMAN, Director ... Manufacturing Processes, Assembling, Combined Machines, Special Article Making; Metal Deforming; Sheet Metal and Wire Working; Metal Fusion-Bonding, Metal Founding; Machine Tools for Shaping or Dividing; Work and Tool Holders, Woodworking; Tools; Cutlery; Jacks; Fishing, Etc.; Butchering; and Books and Printed Matter.	3-02-81
AMUSEMENT, HUSBANDRY, PERSONAL TREATMENT, INFORMATION, GROUP 330— R. E. AEGERTER, Director .... Amusement and Exercising Devices; Projectors; Animal and Plant Husbandry; Plants; Harvesting; Earth Working and Excavating; Tobacco; Artificial Body Members; Dentistry; Jewelry; Surgery; Toiletry; Printing; Typewriters; Information Dissemination.	2-13-80
HEAT, POWER, AND FLUID ENGINEERING, GROUP 340—D. J. STOCKING, Director .... Power Plants; Combustion Engines; Fluid Motors; Reaction Motors; Pumps; Rotary Engines and Pumps; Heat Generation and Exchange; Refrigeration; Ventilation; Drying; Temperature and Humidity Regulation; Couplings; Gearing; Fluid Handling and Control; Lubrication.	11-17-80
GENERAL CONSTRUCTIONS, TEXTILES, MINING AND GEARING, GROUP 350— A. L. SMITH, Director .... Building Structures; Racks; Cabinets; Closures; Supports; Furniture; Fasteners; Locks; Pipe Couplings; Joints; Miscellaneous Hardware; Textiles; Sewing Machines; Apparel; Footwear; Earth Engineering; Earth Drilling; Mining; Wells; Roads; Bridges; Tool Driving; Gearing; Machine Elements; Clutches.	2-09-80

Expiration of patents: The patents within the range of numbers indicated below expire during November 1982, except those which may have expired earlier due to shortened terms under the provisions of Public Law 690, 79th Congress, approved August 8, 1946 (60 Stat. 940) and Public Law 619, 83rd Congress, approved August 23, 1954 (68 Stat. 764), or which may have had their terms curtailed by disclaimer under the provisions of 35 U.S.C. 253. Other patents, issued after the dates of the range of numbers indicated below, may have expired before the full term of 17 years for the same reasons, or have lapsed under the provisions of 35 U.S.C. 151.

Patents .... Numbers 3,214,767 to 3,221,338, inclusive
Plant Patents .... Numbers 2,566 to 2,576 inclusive

REEXAMINATIONS

February 1, 1983

Matter enclosed in heavy brackets [ ] appears in the patent but forms no part of this reexamination specification; matter printed in italics indicates additions made by reexamination

B1 4,083,229 (49th)
METHOD AND APPARATUS FOR DETECTING AND LOCATING FLUID LEAKS
Allen R. Anway, Superior, Wis., assignor to Plaunt & Anderson Company, Inc., Duluth, Minn.
Reexamination Request No. 90/000,118, Dec. 2, 1981.
Reexamination certificate for Patent No. 4,083,229, issued Apr. 11, 1978, Ser. No. 727,359, Sep. 28, 1976.
U.S. Cl. 73/40.5 A Int. Cl.^{3} G01M 3/00

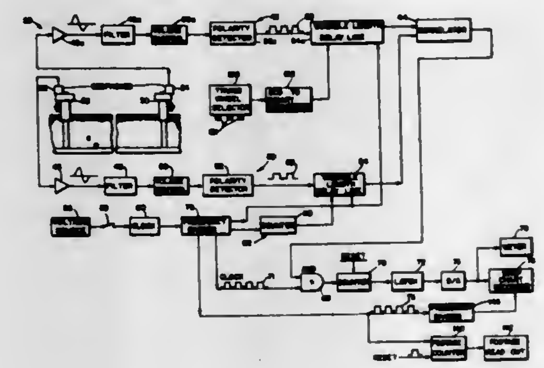

AS A RESULT OF REEXAMINATION, IT HAS BEEN DETERMINED THAT:

The patentability of claims 17, 18, and 36–40 is confirmed.

Claims 6, 7, 9, 10, 12, 14, 23, 24, 27, 32 and 34, having been finally determined to be unpatentable, are cancelled.

Claims 1, 4, 13, 15, 19, 22, 25, 26, 28, 30, 31, 33, 35 and 41–43 are determined to be patentable as amended.

Claims 2, 3, 5, 8, 11, 16, 20, 21 and 29, dependent on amended claims, are determined to be patentable.

New claims 44–108 are added and determined to be patentable.

61. In an apparatus for locating a fluid leak in an underground or unexposed pipe or conduit, first means effective upon receipt of a vibration cause by the leak for producing a first electrical one-bit digital signal corresponding in phase and frequency to the received vibration, second means effective upon receipt of a vibration caused by the vibration caused by the leak for producing a second electrical one-bit digitial signal corresponding in phase and frequency to the received vibration, said first means comprising a first signal-producing transducer, and said second means comprising a second signal-producing transducer, said first and second transducers being selectively positionable to contact portions of a pipeline system containing said pipe for receiving the leak-produced vibration at spaced apart locations which lie along the path of the pipe such that the extent of correlation between said first and second signals is dependent on the time required for the leak-produced vibration to reach said locations, electrical time delay circuit means electrically connected to said first means for variably time delaying said first signal relative to said second signal to cause maximum mutual time correlation between the two signals, and third means providing an indication of the extent of time correlation between just the time delayed one of said signals and the other of said signals and for enabling the location of the leak to be determined from the time delay required to achieve said maximum mutual time correlation between just the time delayed one of said signals and the other of said signals.

B1 4,173,910 (50th)
METHOD AND APPARATUS FOR HANDLING BRICK
Cletus E. Lineberry, Staley; John G. Buckner, Ramseur; Jimmy W. Harris, Silver City, all of N.C., assignors to Auto-Systems and Service, Inc., Staley, N.C.
Reexamination Request No. 90/000,106, Nov. 12, 1981.
Reexamination Certificate for Patent No. 4,173,910, issued Nov. 13, 1979, Ser. No. 910,646, May 30, 1978.
U.S. Cl. 83/29 Int. Cl.^{3} B26D 7/06.

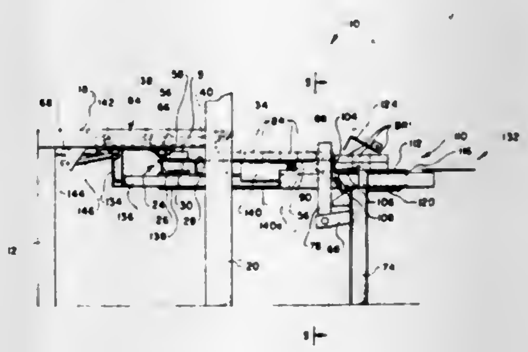

AS A RESULT OF REEXAMINATION, IT HAS BEEN DETERMINED THAT:

The patentability of claims 14–19, 24 and 25 is confirmed.

Claims 2, 3, 4 and 20, having been finally determined to be unpatentable, are cancelled.

Claims 1, 5, 10, 21 and 23 are determined to be patentable as amended:

Claims 6–9, 11–13, and 22, dependent on amended claims, are determined to be patentable.

New claim 26 is added and determined to be patentable.

1. A brick stacking apparatus for receiving bricks from supply means and transferring the bricks to a receiving

table in a manner that results in the transferred bricks forming at least a two course high stack on said receiving table, said brick stacking apparatus comprising: an elevator assembly adapted to be operatively mounted between said supply means and said receiving table for receiving bricks from said supply means and transferring the received bricks to said receiving table, said elevator assembly including at least two vertically spaced brick receiving levels with each receiving level including a generally horizontal support member for supporting bricks received within that receiving level; actuating means operatively connected to said elevator assembly for moving said elevator assembly and the receiving levels thereof between at least two vertically spaced positions wherein at each position at least one receiving level of said elevator assembly aligns with said supply means; and [transfer means for transferring bricks from said supply means to respective receiving levels of said elevator assembly in response to respective levels of said elevator assembly aligning with said supply means as said elevator assembly is actuated between said at least two vertically spaced positions, said transfer means further including means for simultaneously transferring bricks from at least the two receiving levels of said elevator assembly to said receiving table, whereby successive transfers from said elevator assembly to said receiving table results in an at least a two course high brick stack being formed on said receiving table] *transfer means for transferring bricks from said supply means to respective receiving levels of said elevator assembly and for simultaneously transferring bricks from at least the two receiving levels of said elevator assembly to said receiving table, said transfer means including a first pusher operative to push a single course formation of brick across said supply means and drive means for driving said first pusher in a predetermined time relationship relative to the vertical movement of said elevator assembly such that the actuation of said first pusher results in certain bricks on said supply means being pushed into an aligned receiving level of said elevator whereby said first pusher acts to successfully transfer bricks to each of the two receiving levels of said elevator assembly as the respective receiving levels align with bricks on said supply means during the vertical movement of said elevator assembly; said transfer means further including a second pusher cooperative with said first pusher to simultaneously cause the transfer of bricks from at least two levels of said elevator assembly onto said receiving table and drive means for driving said second pusher in a predetermined time relationship relative to the vertical movement of said elevator assembly and the actuation of said first pusher; and wherein the movement relationship of said elevator assembly and said first and second pushers are such that bricks in the two vertically spaced receiving levels are pushed from the elevator assembly simultaneously by (1) bricks entering one receiving level due to the actuation of said first pusher and the resulting movement of bricks from said supply means into that one receiving level, and (2) by the direct engagement of bricks in the other receiving level by said second pusher, wherein the exiting bricks from the uppermost disposed receiving level of said elevator assembly fall onto the exiting bricks from the lowermost disposed receiving level of said elevator assembly to form a two course high brick stack on said receiving table.*

B1 4,016,880 (51st)
OSMOTICALLY DRIVEN ACTIVE AGENT DISPENSER

Felix Theeuwes, Los Altos; Nalinkat C. Damani, Sunnyvale, both of Calif., assignors to Alza Corporation, Palo Alto, Calif.

Reexamination Request No. 90/000,087, Oct. 14, 1981.
Reexamination Certificate for Patent No. 4,016,880, issued Apr. 12, 1977, Ser. No. 663,665, Mar. 4, 1976.
U.S. Cl. 128/260 Int. Cl.[3] A61M 31/00

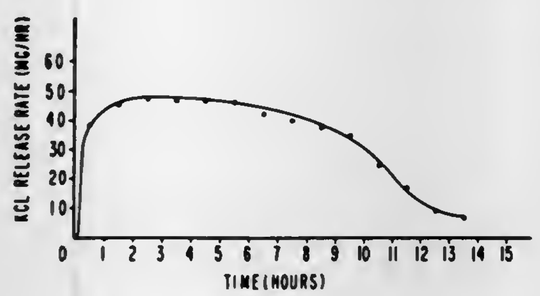

AS A RESULT OF REEXAMINATION, IT HAS BEEN DETERMINED THAT:

Claims 2-11, having been finally determined to be unpatentable, are cancelled.

Claim **1** is determined to be patentable as amended:

New claims 12-32 are added and determined to be patentable.

1. An osmotically driven active agent *pump* [dispenser] for *pumping an active agent containing solution into* [use in] an aqueous environment *at a substantially constant rate for an extended period of time after introduction into said environment, said pump* comprising:

(a) a core *containing an amount* of an osmotically effective pressure generating active agent composition *sufficient to maintain the concentration of said pressure generating composition in solution within the pump at the saturation level for said extended period of time*; and

(b) a substantially inexpandable wall having a substantially intact surface enclosing the core, said wall being substantially impermeable to the active agent composition [and], *at least a portion of said wall being permeable to water, said water permeable portion* having a controlled *and predetermined* permeability to water and including,

(c) means responsive to the pressure generated within the [dispenser] *pump* by imbibition of water from the environment by the core through the *water permeable portion of said* wall to create and form at least one exit passageway in situ in the wall through which the active agent composition in solution is pumped osmotically from the core into the environment at a substantially predetermined, substantially constant rate *after the formation of said exit passageway and for said extended period of time.*

DEFENSIVE PUBLICATIONS

PUBLISHED FEBRUARY 1, 1983

Published at the request of the applicant or owner in accordance with the Notice of Dec. 16, 1969, 869 O.G. 687. The abstracts of Defensive Publication applications are identified by distinctly numbered series and are arranged chronologically. The heading of each abstract indicates the number of pages of specification, including claims and sheets of drawings contained in the application as originally filed. The files of these applications are available to the public for inspection and reproduction may be purchased for 30 cents a sheet.

Defensive Publication applications have not been examined as to the merits of alleged invention. The Patent and Trademark Office makes no assertion as to the novelty of the disclosed subject matter.

T102,701
INK JET INK COMPOSITION

Robert S. Cutler, 6125 Habitat Dr., #1096, Boulder, Colo. 80301, and Sterritt R. Fuller, Jr., Deer Trail Rd., Boulder, Colo. 80302

Continuation of Ser. No. 170,343, Jul. 21, 1980. This application Mar. 1, 1982, Ser. No. 353,722
Int. Cl.[3] C09D *11/10, 11/00*
U.S. Cl. 524—562
No Drawing. 18 Pages Specification

A liquid ink for use in ink jet printing, comprising a water-based dye, a water-soluble styrene/acrylic copolymer as the sole binder constituent, water and ammonia as a volatile drying conformant.

REISSUES

FEBRUARY 1, 1983

Matter enclosed in heavy brackets [ ] appears in the original patent but forms no part of this reissue specification; matter printed in italics indicates additions made by reissue.

Re. 31,135
FLEXIBLE COLLAPSIBLE CONTAINERS, AND METHOD OF MOLDING

David A. Winchell, Twin Lakes, Wis.; Jerry D. Martin, Cary, Ill., and Frank L. Roe, Brookfield Center, Conn., assignors to Baxter Travenol Laboratories, Inc., Deerfield, Ill.

Original No. 4,191,231, dated Mar. 4, 1980, Ser. No. 817,940, Jul. 22, 1977. Application for reissue Mar. 3, 1982, Ser. No. 354,416

Int. Cl.^{3} B65D *35/08*

U.S. Cl. 150—8 **5 Claims**

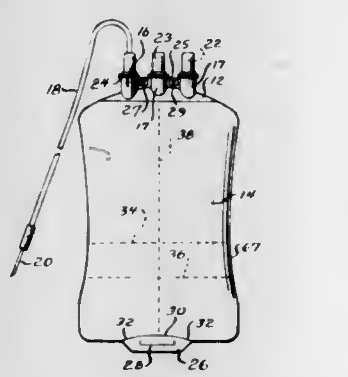

1. A blow-molded, flexible, collapsible container, free of laterally positioned longitudinal seal [lines] *flaps,* which defines a sealed, collapsible portion of generally oval transverse cross-section and, defined at one end of said sealed portion, a shoulder portion having a wall thickness substantially thicker than the wall thickness of the sealed, collapsible portion, a plurality of spaced, upstanding sleeves being defined through said shoulder portion at said one end, the oval cross-sections of said sealed, collapsible portion defining major axes which are at least 50 percent greater than the minor axes of said oval cross-sections to facilitate flat collapse, and at the end of said container opposite to said shoulder portion end an integrally-attached, flat tail seal and hanger portion, said tail seal and hanger portion defining a continuous inner end integral with the remainder of said container material and having central and lateral portions, said continuous inner end being longitudinally recessed toward said container at its central portion relative to the lateral portions thereof to permit tucking of the hanger portion into the bag.

Re. 31,136
HERBICIDAL 5-PYRIMIDINECARBONITRILES

Gino R. Treves, Princeton, N.J., assignor to FMC Corporation, Philadelphia, Pa.

Original No. 4,092,150, dated May 30, 1978, Ser. No. 811,917, Jun. 30, 1977. Continuation-in-part of Ser. No. 718,224, Aug. 27, 1976, abandoned. Application for reissue Aug. 8, 1980, Ser. No. 176,615

Int. Cl.^{3} A01N *9/22;* **C07D** *239/34*

U.S. Cl. 71—92 **20 Claims**

3. A chemical compound having the structural formula

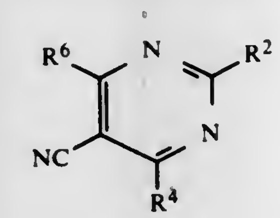

wherein

(a) R^2 is a radical selected from amino, lower alkylamino, lower cycloalkylamino, di(lower alkyl)amino, and [alpha-cyano(lower alkyl)]amino;

(b) R^4 is a lower alkoxy radical; and

(c) R^6 is a radical selected from amino, lower alkylamino, lower cycloalkylamino, and di(lower alkyl)amino;

with the proviso that neither R^2 nor R^6 is tert-butylamino; and provided further that when R^2 is isopropylamino, R^6 is other than n-butylamino; and when R^2 is methylethylamino, R^6 is other than isopropylamino; and when R^2 is diethylamino, R^6 is other than amino.

15. A method of controlling plant growth which comprises applying to the locus of the plants an herbicidally effective amount of a chemical compound of claim 3.

Re. 31,137
POUCH

William F. Ossian, Appleton; Thomas S. Wildenberg, Kimberly, both of Wis., and Henry Warmbier, Cary, Ill., assignors to American Can Company, Greenwich, Conn.

Original No. 4,190,477, dated Feb. 26, 1980, Ser. No. 901,644, May 1, 1978. Division of Ser. No. 866,928, Jan. 4, 1978, abandoned. Application for reissue Jan. 22, 1981, Ser. No. 227,527

Int. Cl.^{3} B29B *3/00*

U.S. Cl. 156—244.11 **8 Claims**

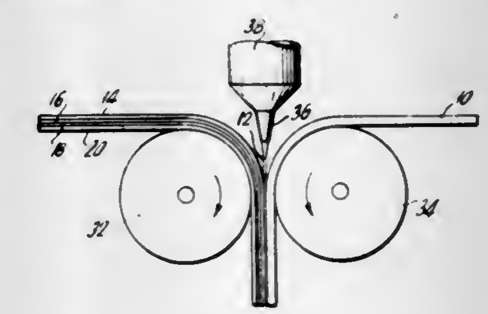

1. A method of making a multiply laminated structure comprising an inside sealing layer containing polypropylene and an outer metal foil layer, which method comprises:

(a) applying a primer layer to said metal foil, said primer layer being a graft copolymer of maleic anhydride and propylene wherein the maleic anhydride moieties are grafted onto a polypropylene backbone;

(b) drawing said primed metal foil laminate and said sealing layer in face-to-face relation into the nip defined by a pair of rollers; and

(c) simultaneously drawing a hot layer of extrusion grade polypropylene into said nip between said sealing layer and primer layer to thereby laminate said sealing layer to said primer layer.

6. A method of making a multiply laminated structure comprising an inside sealing layer containing polypropylene and an outer metal foil layer, which method comprises:

(a) applying a primer layer to said metal foil, said primer layer being a graft copolymer of maleic anhydride and propylene wherein the maleic anhydride moieties are grafted onto a polypropylene backbone;

(b) drawing said primed metal foil laminate and said sealing layer in face-face relation into the nip defined by a pair of rollers; and

(c) simultaneously drawing a hot layer of extrusion grade polymer containing polypropylene into said nip between said sealing layer and primer layer to thereby laminate said sealing layer to said primer layer.

Re. 31,138
SINGLE FACER FOR MANUFACTURING SINGLE-FACED CORRUGATED BOARD
Masateru Tokuno, Nishinomiya, Japan, assignor to Rengo Co., Ltd., Osaka, Japan
Original No. 4,177,102, dated Dec. 4, 1979, Ser. No. 926,853, Jul. 21, 1978. Continuation-in-part of Ser. No. 778,613, Mar. 17, 1977, abandoned. Application for reissue Apr. 16, 1981, Ser. No. 254,972
Claims priority, application Japan, Apr. 19, 1976, 51-45136; Dec. 30, 1976, 51-158989
Int. Cl.³ B31F *1/00*
U.S. Cl. 156—473 **24 Claims**

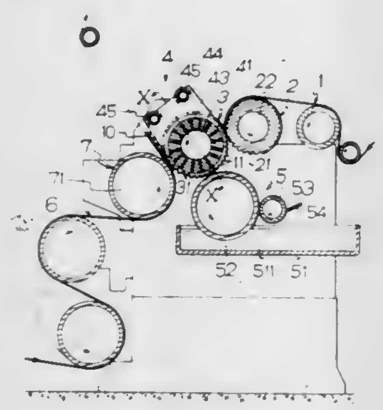

13. A single facer for manufacturing single-faced corrugated board comprising:
(*a*) *a first fluted corrugating roll;*
(*b*) *a second fluted corrugating roll meshing with said first corrugating roll to form a nip for receiving a sheet medium to corrugate the same;*
(*c*) *plural axially spaced circumferential grooves disposed about the periphery of the second corrugating roll, said grooves each having a bottom located below the bottoms of the flutes on the second roll;*
(*d*) *plural suction conduits formed in the periphery of the second corrugating roll to provide a suction force for attracting and holding the corrugated sheet medium onto a portion of the peripheral surface of the second corrugating roll, each said suction conduit having an inner end and an outer end, said outer suction conduit ends terminating at the bottoms of the grooves whereby said outer ends are spaced from the corrugated medium on the second corrugating roll;*
(*e*) *a source of suction connected to the inner ends of the suction conduits;*
(*f*) *means for applying adhesive to the peaks of the flutes of the corrugated medium; and*
(*g*) *a pressure roll for pressing a sheet linerboard against the corrugated medium after the adhesive has been applied, to bond the linerboard to the corrugated medium.*

Re. 31,139
MANUFACTURE OF MALIC ACID
Carl R. Ahlgren, East Aurora, N.Y., assignor to Allied Corporation, Morris Township, Morris County, N.J.
Original No. 3,379,756, dated Apr. 23, 1968, Ser. No. 404,166, Oct. 15, 1964. Application for reissue Nov. 8, 1979, Ser. No. 92,306
Int. Cl.³ C07C *59/245*
U.S. Cl. 562—582 **9 Claims**

1. In a process for the synthesis of malic acid from an acid selected from the group consisting of maleic acid, fumaric acid and mixtures thereof in an aqueous reaction mixture at elevated temperature and pressure, the improvement of performing the synthesis in a zone whose surfaces exposed to the reaction mixture consist of at least one material from the group of titanium, zirconium, and tantalum and alloys containing at least 90% of said metal.

PLANT PATENTS

GRANTED FEBRUARY 1, 1983

Illustrations for plant patents are usually in color and therefore it is not practicable to reproduce the drawing.

4,979
SUGAR MAPLE TREE NAMED LEGACY
Willet N. Wandell, Myra Station Rd., Rte. 3, Box 158, Urbana, Ill. 61801
Filed Mar. 18, 1981, Ser. No. 245,153
Int. Cl.³ A01H *5/00*
U.S. Cl. Plt.—51 **1 Claim**

1. A new and distinct variety of sugar maple tree, substantially as herein shown and described, characterized by its relatively dense and fast growth of 38.2 percentum better than other sugar maple trees in the same stand, freedom from leaf tatter during all seasons as exhibited by sugar maple trees in a wide area of the Midwest, numerous strategically placed branches, an abundance of dark colored, leathery leaves with more leaves on the tight, compact crown, its relative ease of propagation and an excellent survival rate of buds through the winter months, with leaves having a protective wax by cutin layer which is 1.5 times thicker than leaves on ordinary sugar maple trees in the stand, the leaves having a protective wax by cutin which is 1.5 times thicker than normal sugar maple trees.

PATENTS

GRANTED FEB. 1, 1983

ERRATA

For CLASS	See PATENT NO.
464–156	4,370,869
604–098	4,370,982
292–048	4,371,205
384–118	4,371,216
384–291	4,371,219
384–371	4,371,220
436–087	4,371,374
419–056	4,371,396
436–544	4,371,515
523–144	4,371,648
523–145	4,371,649
528–388	4,371,671
544–300	4,371,734
544–300	4,371,735
544–316	4,371,736
544–370	4,371,737
422–186	4,371,787

PATENTS

GRANTED FEBRUARY 1, 1983

GENERAL AND MECHANICAL

4,370,754
VARIABLE PRESSURE PAD
Byron A. Donzis, Houston, Tex., assignor to American Pneumatics Co., Houston, Tex.
Continuation-in-part of Ser. No. 928,425, Jul. 27, 1978, Pat. No. 4,217,705, which is a continuation-in-part of Ser. No. 842,250, Oct. 14, 1977, abandoned, which is a continuation-in-part of Ser. No. 774,276, Mar. 4, 1977, abandoned. This application Sep. 28, 1979, Ser. No. 80,095
Int. Cl.[3] A41D *13/00*
U.S. Cl. 2—2 **32 Claims**

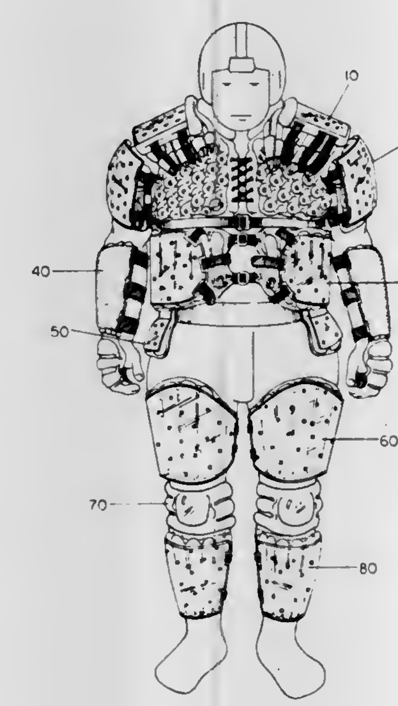

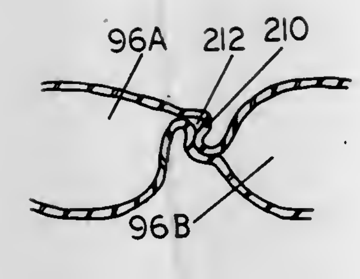

1. Rib pads for protecting the ribs comprising:

a fluid pressurized pad covering the ribs and being made of a fabric material which does not distend under pressure, said pad including a plurality of interconnected fluid chambers formed by sealing adjacent surfaces of said material;

valving means for preventing surges of fluid within said fluid chambers, said valving means including folds of said material at the interconnections of said fluid chambers whereby said folds must be opened to permit fluid flow from one chamber to another; and

rigid means for apportioning an external force applied to said pad, said rigid means covering the exterior of said fluid pressurized pad.

4,370,755
COMBINATION PONCHO AND CUSHION
John T. Crumby, 206 Scenic Dr., Oak Ridge, Tenn. 37830
Continuation-in-part of Ser. No. 67,110, Aug. 14, 1979, abandoned. This application Jul. 17, 1980, Ser. No. 169,679
Int. Cl.[3] A41D *3/08*
U.S. Cl. 2—88 **1 Claim**

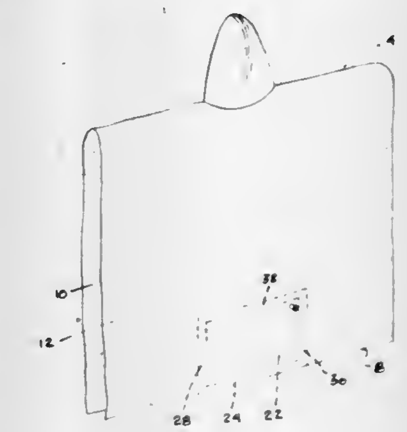

1. A combination poncho and seating cushion for human use, comprising a rectangular sheet of single ply waterproof material having side edges and transverse edges and having an opening positioned substantially midway between the side and transverse edges for the reception and passage of the head of the wearer, the poncho being adapted and constructed to form front and rear panels when folded about a line extending transversely from the lead receiving opening with the fold line resting on the shoulders of the wearer, the rear panel being of such length that when the poncho is worn with the wearer in a standing position the lower edge of the rear panel is adjacent and below the buttocks of the wearer, a substantially rectangular sheet of single ply waterproof material attached about its periphery to the inner surface of the rear panel of the poncho with one of its edges substantially aligned with the lower edge of the rear panel at the center thereof, said attached sheet being larger in areas than the outline of its edges, thereby forming an inflatable enclosed pocket at and adjacent the buttocks of the wearer in a standing or seated position, and means for inflating the pocket to form a cushion.

4,370,756
MULTIPLE PLY GARRISON CAP
Paul G. Gallin, Bronxville, N.Y., assignor to Art Cap Company, Inc., New York, N.Y.
Filed Oct. 29, 1980, Ser. No. 202,012
Int. Cl.[3] A42B *1/04*
U.S. Cl. 2—195 **7 Claims**

1. A multiple ply garrison cap comprising

a crown portion and an outer band portion extending upwardly from the lower margin of said crown portion and surrounding the lower parts of said crown portion and attached thereto,

both said crown portion and said band portion comprising a multiple ply laminated material including an outer ply of

textile suiting material and an inner ply of nylon tricot textile material with the two textile materials being se-

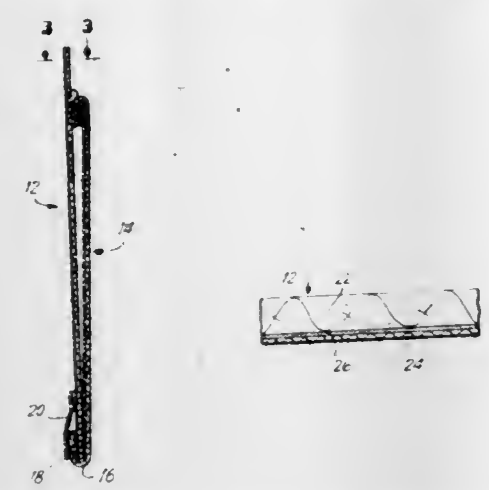

curely bonded together by means of a thin layer of polyester foam.

4,370,757
GARMENT WITH A MODESTY PANEL
Bonnie D. Richmond, 11206 Martha, Omaha, Nebr. 68134
Filed Mar. 19, 1982, Ser. No. 359,946
Int. Cl.³ A41B *9/00*
U.S. Cl. 2—400 **3 Claims**

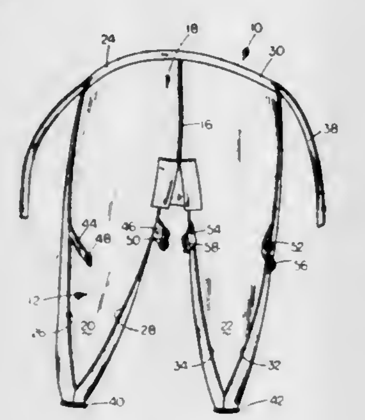

1. A garment comprising:
first and second garment portions each having upper and lower ends and inner and outer side edges,
said first and second garment portions being joined together at their upper inner side edges to form a body portion which may be wrapped around a person to cover the lower abdomen, thighs and buttocks of the person,
means for maintaining said body portion on the person,
said first and second garment portions having means at their lower ends forming ankle receiving portions,
said first and second garment portions having a width sufficient, between said body portion and said ankle receiving portions, to enable said first and second garment portions to be wrapped around the person's legs,
means on said first and second garment portions above said ankle receiving portions to maintain said garment portions on the person's legs,
and a foldable modesty panel at the juncture of said upper inner side edges of said first and second garment portions extending downwardly therefrom for covering the person's genital area.

4,370,758
SOUND ATTENUATOR FOR USE IN CONJUNCTION WITH THE MOTORCYCLE HELMET OR THE LIKE
Dale B. Mattheis, 10790 Falk Rd. NE., Bainbridge Island, Wash. 98110
Filed Oct. 27, 1980, Ser. No. 201,290
Int. Cl.³ A42B *3/02*
U.S. Cl. 2—423 **6 Claims**

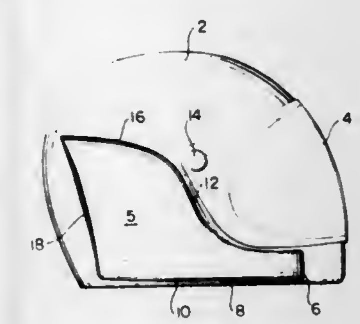

2. A motorcycle helmet which reduces the noise created by passing wind without lessening the ability of a rider to hear comprising:
a rigid exterior shell approximating the shape of a wearers head and including the necessary padding or other attachments to provide safety and comfort,
outwardly extending helmet configuring elements extending along each side of the helmet and forming a smooth surface therealong, said elements forming a contoured smoothly flowing leading portion which extends rearwardly while simultaneously becoming more prominent along the horizontal and vertical dimensions of the helmet and terminating at a position normally behind the ear of the wearer in a flared open condition generally reducing noise created while passing through the wind and yet permitting entry of traffic noise.

4,370,759
FACE GUARD MOUNT FOR HELMETS
Robert Zide, Williamstown, W. Va., assignor to Pro-Line, Inc., Marietta, Ohio
Filed Mar. 17, 1981, Ser. No. 244,710
Int. Cl.³ A42B *1/08*
U.S. Cl. 2—424 **15 Claims**

5. In a helmet, a substantially rigid helmet shell, a substantially rigid face guard for the helmet, and a yielding shock absorbing mount for the face guard including an anchor element attached to the shell, said anchor element comprising a bracket having a wall projecting outwardly from said shell and said wall having an aperture, a connecting element attached to the face guard and having a shank portion engaged movably with the anchor element and, adapted to reciprocate within said aperture, a head carried by the shank portion, a clip detachably engageable with the shank portion between said head and said wall to retain the connecting element engaged movably with said anchor element, and a resilient shock absorbing element engaged between parts of the anchor and connecting elements and yieldingly resisting movement of the connecting

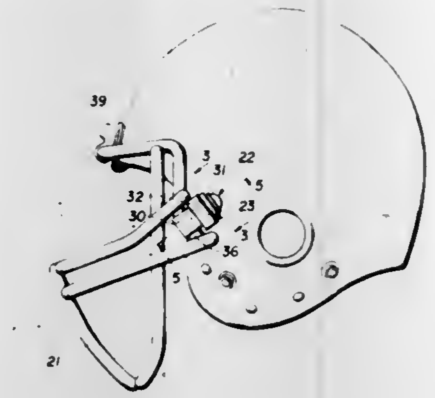

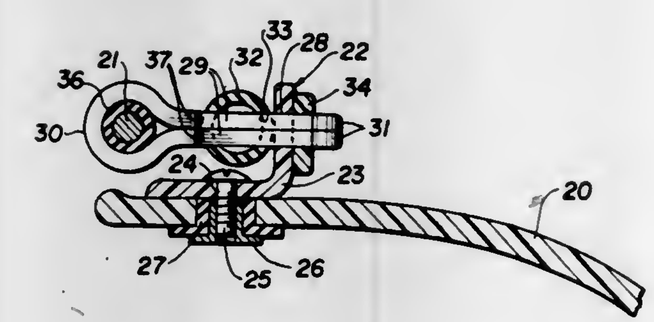

element in one direction relative to the anchor element in response to an impact force on the face guard.

4,370,760
ANTERIOR CHAMBER INTRAOCULAR LENS
Charles D. Kelman, 269-70 Grand Central Pkwy., Floral Park, N.Y. 11005
Filed Mar. 25, 1981, Ser. No. 247,570
Int. Cl.³ A61F *1/16, 1/24*
U.S. Cl. 3—13 **29 Claims**

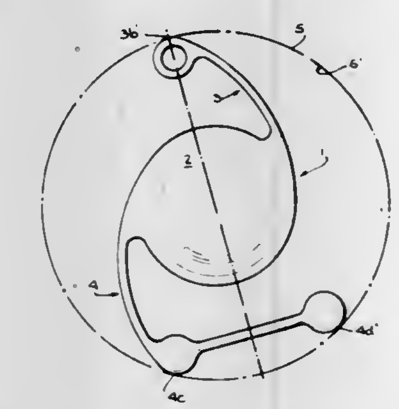

1. An intraocular lens adapted to be implanted in the groove formed between the iris and the scleral spur in the anterior chambers of human eyes of different anterior chamber diameters, including:
an optic,
a pair of lateral position fixation means connected with said optic,
one of said position fixation means including a first contact portion adapted to seat in the upper portion of the groove,
the other position fixation means including a second contact portion adapted to seat in the lower portion of the groove,
said optic having opposite peripheral portions and said one position fixation means having a first portion extending outwardly from a first of said peripheral portions and said other position fixation means having a first portion extending outwardly from a second of said peripheral portions,
at least one of said pair of position fixation means having a second portion extending from the first portion generally transversely thereto and at least partly peripherally of said optic, said second portion of said position fixation means having that part of its peripheral edge which faces said optic spaced from the periphery of said optic and having a free end portion,
said first and second contact portions being constructed and arranged for relative movement therebetween to assume a first fully extended position in which said contact portions are spaced apart a distance substantially approximating the largest anterior chamber diameter within the range of anterior chamber diameter sizes most commonly exhibited by human eyes, and a plurality of second positions corresponding to the different anterior chamber diameters of different eyes within said range,
said pair of position fixation means being constructed and arranged to undergo said relative movement from said first to any of said second positions thereof while limiting movement of said optic along the optical axis thereof in anterior direction toward the cornea to a distance not substantially in excess of 1.0 mm and to a position in which the optic, after seating of the lens in the anterior chamber groove corresponding to any of said second positions, will be sufficiently spaced from the cornea to minimize risk of contact between the optic and the cornea during normal deformations of the eyeball thereafter, and
at least one of said pair of position fixation means being effective to urge said contact portions in a direction to assume said fully extended position so as to maintain said contact portions seated in the respective groove portions upon said lens being implanted in an eye having an interior chamber diameter of any size within said range,
whereby said position fixation means properly position the lens in the anterior chamber of any eye exhibiting any anterior chamber diameter within said range.

4,370,761
ARTICULATED PROSTHESIS FOR LOWER LIMB
Roberto Serri, Via T. Signorini 21, Scandicci (Firenze), Italy
Filed May 22, 1981, Ser. No. 266,167
Claims priority, application Italy, May 28, 1980, 9450 A/80; Feb. 27, 1981, 9350 A/81
Int. Cl.³ A61F *1/08*
U.S. Cl. 3—26 **4 Claims**

1. An articulated prosthesis comprising:
first means for anchoring said prosthesis to a thigh;
a knee joint connected to said first means;
a post connected at its upper end to said knee joint;
an ankle joint connected to a lower end of said post;
a foot connected to said ankle joint;

said post defining a vertical axis;
said knee joint including first and second vertically aligned horizontal axes, said first and second horizontal axes being disposed rearward of said vertical axis;
a first movable element in said knee joint affixed to said first means, said first movable element being pivoted on said first horizontal axis and extending forward to intersect said vertical axis;
a second movable element in said knee joint affixed to said post, said second movable element being pivoted on said second horizontal axis and extending forward to intersect said vertical axis;
first and second interengaging toothed portions on said first and second movable elements respectively, each toothed portion being concentric with its respective horizontal axis;
said ankle joint including a third horizontal axis, said vertical axis intersecting said third horizontal axis;
said foot being rotatable about said third horizontal axis;
a first vertical spring operative to urge rotation of said foot in a first direction about said third horizontal axis to move a toe of said foot downward;
a second vertical spring operative to urge rotation of said foot in a second direction about said third horizontal axes to move said toe upward;
said first vertical spring being stronger than said second vertical spring;
second means for reducing a force applied by said first vertical spring to a value below a force applied by said second vertical spring when said knee joint is bent whereby said toe of said foot is urged upward to clear the ground when said foot is raised while said prosthesis is moved forward to straighten said knee in preparation for a next step.

4,370,762
PORTABLE ATTACHMENT FOR SINKS
John Heil, Dayton, Ohio, assignor to Allcraft Plastic Company, Inc., Dayton, Ohio
Filed Mar. 13, 1981, Ser. No. 243,525
Int. Cl.³ E03C ***1/24***
U.S. Cl. 4—206 **3 Claims**

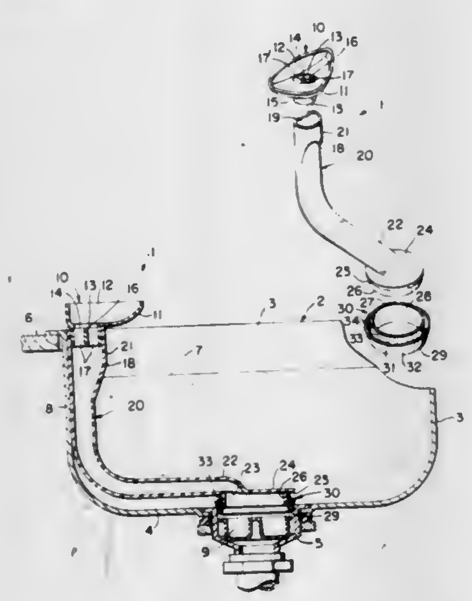

1. A sink attachment for use in a sink having a drain, said attachment comprising:
an elbow-shaped member having a first end and a second end, said elbow-shaped member having a hollow interior open at said first and second ends;
a receptacle having a wide mouth which tapers down to a hollow extension which is shaped to be received in said first end; and
sealing means associated with said second end for providing a sealing engagement between said sink atachment and said sink drain, said sealing means including a sealing member having a downwardly directed substantially cylindrical portion, and a gasket received around said cylindrical portion, said gasket being a continuous hollow piece having a first end and a second end, said second end having a larger circumference than said first end, with said piece folding over itself to provide two walls of unequal height having a recess therebetween, with said first end engaging said cylindrical portion of said sealing member.

4,370,763
AUTOMATIC DOSING DISPENSER
John E. Dolan, Old Orchard St., Harrison, N.Y. 10528
Filed May 20, 1981, Ser. No. 265,555
Int. Cl.³ E03D ***9/02***
U.S. Cl. 4—228 **9 Claims**

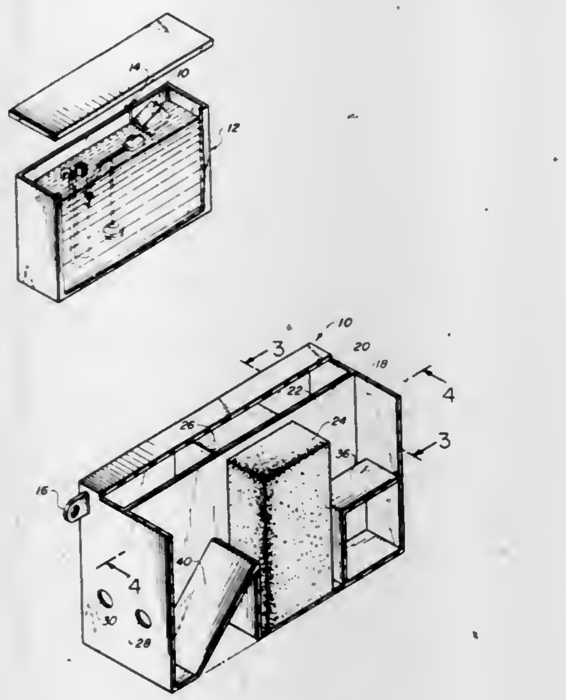

1. A dispenser immersible in a body of liquid, said dispenser comprising:
at least one chamber for producing a dose amount of liquid solution of a detergent or the like to be dispensed into said body of liquid as the level of said body falls;
intake means at one end of said dispener for receiving a predetermined quantity of liquid from said body;
said chamber within said dispenser holding a block of solid material from which said liquid solution is to be formed, and including means for initially retaining said predetermined quantity of liquid and isolating it from said block of material;
flotation means at the other end of said dispenser;
exit means for permitting the dose amount of liquid solution to flow out of said dispenser;
means for moving said dispenser in accordance with the force produced by said flotation means at said one end as the level of said body of liquid rises, such that, said intake means receives said predetermined quantity of liquid while said exit means cannot receive any substantial quantity from said body; and such that said dose amount of liquid solution is dispensed in accordance with gravity through said exit means as the level of the body of liquid falls.

4,370,764
TOPICAL WASHING DEVICE
Shizuka Ando; Hiroshi Oyama, and Toshio Yamaguchi, all of Kitakyushu, Japan, assignors to Toto, Ltd., Fukuoka, Japan
Filed Mar. 31, 1981, Ser. No. 249,676
Int. Cl.³ A61H ***35/00;*** **A47K** ***3/22***
U.S. Cl. 4—443 **22 Claims**

1. A topical washing device for cleaning a body portion of a user, said device comprising:

(a) a washing nozzle for discharging washing water towards said body portion;
(b) a water feed line connecting said washing nozzle to a source of water and adapted to conduct said water therethrough;
(c) a heat exchanger provided along said water feed line and forming a portion of said water feed line;
(d) a heater on said heat exchanger to heat water flowing through said heat exchanger;
(e) a sensor on said heat exchanger which is simultaneously sensitive to the temperature of the surface of said heater and the temperature of water discharged by said heat exchanger;
(f) a heat-sensitive safety switch on said heat exchanger which is adapted to cut off a power supply once water within said heat exchanger reaches a predetermined temperature level and to thereby deenergize an electromagnetic valve positioned along said water feed line upstream of said heat exchanger to terminate water supply to said heat exchanger and deactuate said heater to prevent overheating of water within said heat exchanger;

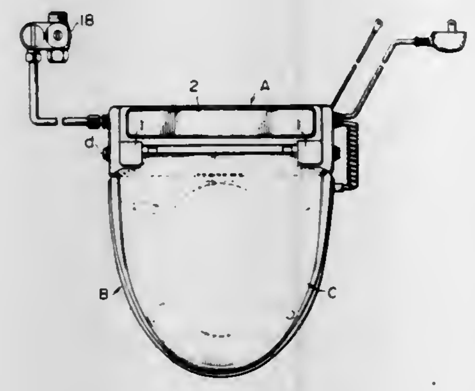

(g) a temperature controller electrically connected to said heater and said sensor to control the output of said heater in response to signals received from said sensor,
said heat exchanger including a pair of juxtaposed vessels and a metallic conduit fluidically communicating said vessels, whereby said vessels and said conduit are comprised of high thermally conductive metal, said heater and said sensor being connected to one of said vessels, and the other of said vessels, which is positioned downstream of said one vessel along said feed line, having a volume sufficient to hold a predetermined quantity of washing water.

4,370,765
ENVELOPE FOR A BED HAVING SIDE RAILS
Gloria C. Webber, 44 Gail Dr., New Rochelle, N.Y. 10805
Filed Sep. 5, 1980, Ser. No. 184,646
Int. Cl.³ A47C ***21/08;*** **A47G** ***9/00***
U.S. Cl. 5—427 **5 Claims**

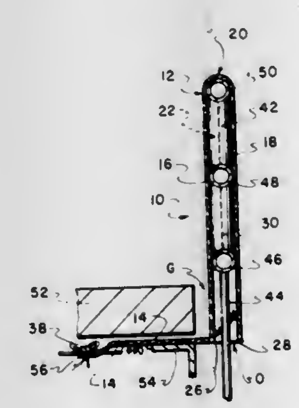

1. An envelope sized and adapted for use with a bed having a mattress support and one or more substantially horizontal side rails vertically spaced from the upper plane of a mattress when placed on a mattress support, comprising an enveloping portion and a flap extending freely therefrom, the enveloping portion having a closed top and side portions and being adapted to fit over and envelop one or more of the vertically spaced side rails, and the flap being adapted to extend under the adjacent longitudinal lower side edge of a mattress, and having means for securing the flap to a mattress support in a manner that prevents a mattress from shifting out of its proper position on a mattress support, and prevents a bed occupant or his or her appendage from becoming lodged between two side rails and/or between the lowermost of the one or more vertically spaced side rails and the mattress or mattress support.

4,370,766
PANEL BED AND COUNTERBALANCING MECHANISM FOR PANEL BED
W. Dorwin Teague, Jr., Nyack, N.Y., assignor to Murphy Door Bed Company, Inc., New York, N.Y.
Filed Dec. 4, 1980, Ser. No. 213,054
Int. Cl.³ A47C ***19/06***
U.S. Cl. 5—133 **11 Claims**

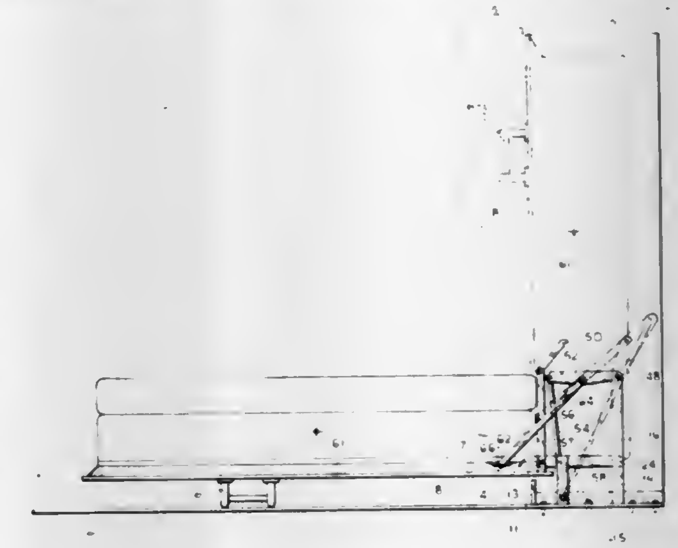

1. A bed which is moved between a horizontal open position for use and a vertical closed position for storage, and a counterbalancing mechanism which includes first pivot means which supports one end of said bed and provides first pivot with a first pivot axis about which said bed is swung in moving between said open and closed positions with said bed having a rigid frame and means which cooperates to provide said first pivot means, said counterbalancing mechanism comprising a rigid fixed structure and two lever and gas-spring assemblies mounted thereon, said rigid fixed structure comprising two support units spaced from each other substantially the width of said bed and positioned whereby said one end of said bed is between said support units when said bed is in said closed position, said rigid fixed structure also including means rigidly attaching said support units stationary in said spaced relationship, said lever and gas-spring assemblies being mounted respectively upon said support units and each including a lever and second pivot means therefor which provides a second pivot axis parallel to said first pivot axis and spaced horizontal and vertical distances from said first pivot axis with said horizontal distance being substantially equal to the length of said lever, each of said lever and gas-spring assemblies also including a link interconnecting the central portion of said lever to said frame with the connection to said frame being adjacent the bottom of said bed and spaced horizontally away from its support unit when said bed is in said open position and being positioned substantially above said first pivot when said bed is in said closed position, and a gas spring which is mounted to exert a force on said lever which is transmitted through said link to provide a lifting moment on said bed about said first axis, the relationship between said gas spring and said lever and said link and the pivot axes thereof being such that said lifting moment varying in a pattern which is similar to the pattern of

the moment of the force of gravity about said first pivot axis as said bed is moved between said open and closed positions.

4,370,767
BEACH MAT
Alberto Fraser, Guaynabo, P.R., assignor to Commonwealth of Puerto Rico, San Juan, P.R.
Filed Apr. 14, 1981, Ser. No. 254,169
Int. Cl.³ A45C *9/00*
U.S. Cl. 5—417 6 Claims

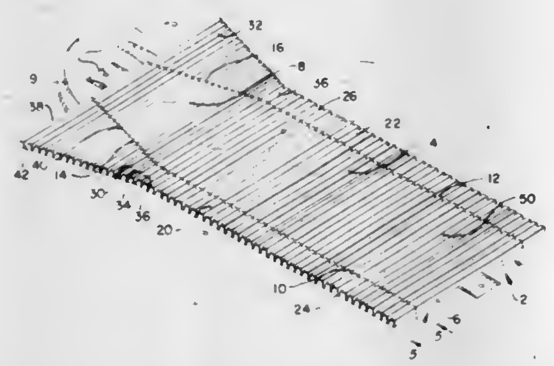

1. A rest mat for human use which may be disposed in various configurations for supine, seated, backrested and other positions, having an upper surface to receive the body, a lower surface, a head end and a bottom end, and comprising these component parts:

(a) an elongated center section extending from end to end of the mat and having
i. a bottom end part with parallel side edges, and
ii. a head end part with side edge which form continuations of the side edges of the bottom end part and converge therefrom to the head end of the mat,
(b) side edge panels which extends along the side edges of the bottom end part of the center section and are pivotally connected thereto to be folded behind the upper surface of the mat into engagement with the lower surface thereof,
(c) side edge panels which extend along each side edge of the head end part of the center section and are pivotally connected thereto to be folded toward the lower surface of the mat, and
i. each of the side edge panels at the head end of the mat having outer side edges which diverge toward the head end of the mat.

4,370,768
DAMPED FLUID DISPLACEMENT SUPPORT SYSTEM
William S. Saloff, Heather La., R.M., Gloversville, N.Y. 12078
Filed Apr. 25, 1980, Ser. No. 143,723
Int. Cl.³ A47C *27/08*
U.S. Cl. 5—450 10 Claims

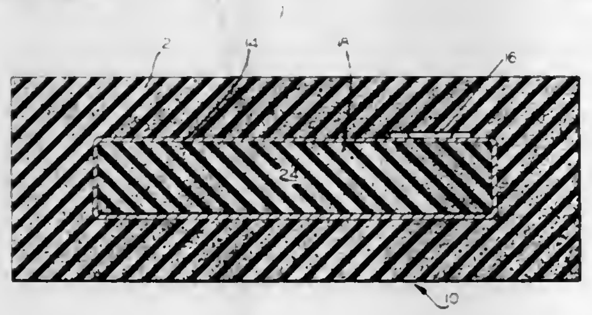

3. A damped liquid displacement support system comprised of:
an envelope of flexible material;
a core of resilient liquid-absorbent material occupying substantially all of the space within the envelope;
a liquid substantially saturating the core;
a valve mounted in the envelope for communicating between its interior and its ambience for admitting and discharging liquids and gases; and
a relatively thick casing of resilient material surrounding the envelope, said casing having a top portion lying above the core and a bottom portion lying below the core, said bottom and top portions each being substantially equal in thickness to the core itself.

4,370,769
CUSHION UTILIZING AIR AND LIQUID
Ralph B. Herzig, 700 N. Rexford Dr., Beverly Hills, Calif. 90210, and Howard G. Cohen, 10420 Eastborne Ave., West Los Angeles, Calif. 90024
Filed Sep. 19, 1980, Ser. No. 188,688
Int. Cl.³ A47C *27/10*
U.S. Cl. 5—452 10 Claims

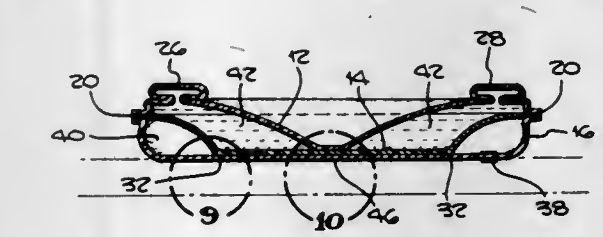

1. As an article of manufacture, a cushion comprising in combination, impervious flexible material shaped to form a cushion and comprising plies bonded together at the edges along sides and back of the cushion whereby to form a lower air chamber and at positions spaced from the sides and back of the cushion and to form an upper liquid chamber, having slack portions at the sides and back of the cushion, whereby the pressure exerted by the weight of a person and the air pressure forces water in the water chamber into portions of the water chamber around the sides and back of a person seated on the cushion.

4,370,770
CUTTING HEAD FOR THREAD CUTTING MACHINES
Rudolf Wagner, Stuttgart, Fed. Rep. of Germany, assignor to Rems-Werk Christian Föll und Söhne GmbH & Co., Waiblingen, Fed. Rep. of Germany
Filed Jul. 17, 1980, Ser. No. 169,606
Claims priority, application Fed. Rep. of Germany, Jul. 20, 1979, 2929337
Int. Cl.³ B23G *5/12*
U.S. Cl. 10—96 R 14 Claims

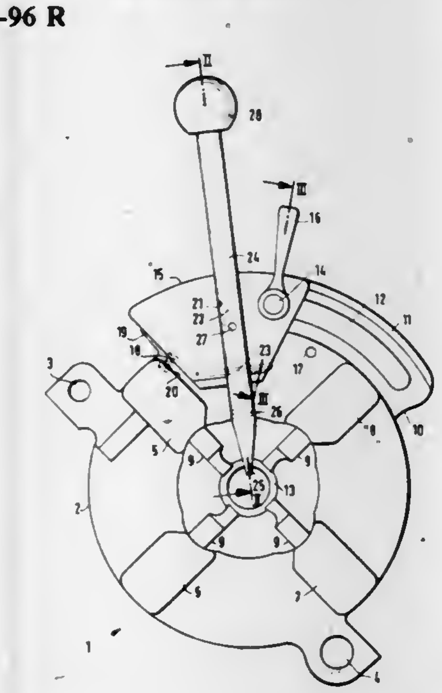

1. A thread-cutting head for pipes, tubes, and the like, comprising in combination:

a cutting-jaw holder;
cutting jaws arranged in said cutting-jaw holder and having a cutting position in a thread cutting range relative to a thread cutting axis;
a control disc displaceably supported on and connected rotatable relative to said cutting-jaw holder, said cutting jaws being radially adjustable by said control disc;
a clamping screw for adjusting said control disc, which for the cutting position of said cutting jaws relative to said cutting-jaw holder is adapted to be tensioned and arrested against a spring force;
an arresting piece arranged on said control disc and provided with a pivot pin directed transverse to the thread cutting axis, said arresting piece being shiftable as limited by spring force to move in a peripheral direction of said cutting-jaw holder relative to the holder;
a single clamping lever pivotally journalled directly on said arresting piece about said pivot pin, that end of said clamping lever located in the region of said cutting jaws being embodied as an unlatching abutment which projects into the thread-cutting range, said lever also having a grip means with which said arresting piece, the unlatching abutment and said control disc are adjustable into a starting position thereof;
a catch member arranged between said cutting-jaw holder and said arresting piece which is secured against shifting by said catch member in the starting position; and
a release pin provided on said clamping lever and directed against said catch member, which is adjustable into a position releasing said arresting piece by said release pin actuatable by said clamping lever.

4,370,771
WATER-DRIVEN BRUSH
Sulpicio A. Gonzalvo, 18772 Eisenhower Cir., Salinas, Calif. 93906
Filed Nov. 6, 1980, Ser. No. 204,640
Int. Cl.³ A46B *13/06*
U.S. Cl. 15—29 1 Claim

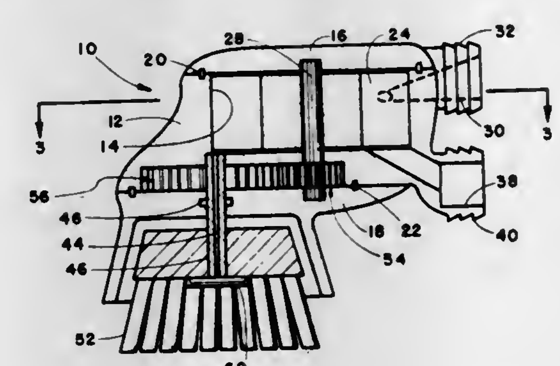

1. A water-driven brush which comprises
a housing forming an interior cylindrical chamber,
a turbine mounted for rotation in said chamber,
a water inlet port adapted to discharge water tangentially into said housing against said turbine to effect rotation thereof,
a main discharge outlet port extending from said chamber at a position spaced angularly from said water inlet port only slightly less than 360 degrees,
a second smaller outlet port extending from said chamber in a hollow rotary shaft connected to said turbine by gearing so that it is positioned adjacent the edge of said chamber, and
a rotary brush member on said hollow rotary shaft surrounding said second outlet port and operatively connected to said turbine.

4,370,772
DEVICE FOR GENTLE TREATMENT OF SPHERICAL BALLS
Berth U. Gustafsson, Österskär, Sweden, assignor to Projectus Industriprodukter AB, Bromma, Sweden
PCT No. PCT/SE79/00028, § 371 Date Sep. 18, 1980, § 102(e) Date Sep. 18, 1980, PCT Pub. No. WO80/01664, PCT Pub. Date Aug. 21, 1980
PCT Filed Feb. 9, 1979, Ser. No. 262,068
Int. Cl.³ B08B *1/04*; B24B *11/06*
U.S. Cl. 15—97 R 13 Claims

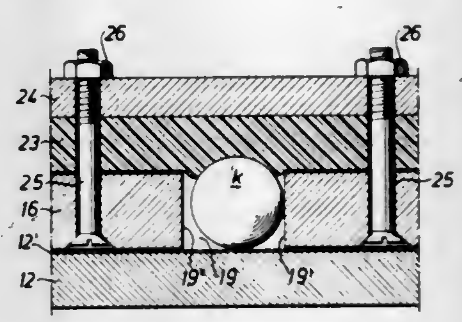

1. A device for gentle mechanical cleaning of substantially spherical balls in the presence of a treatment fluid, comprising:
a first and second disc being substantially parallel and rotatable relative to each other;
said discs being operatively positioned to permit balls to be cleaned to follow a spiral path between the discs while being cleaned;
said first disc including a planar frictional surface;
said second disc being provided with at least one spiral guiding groove being wider than the diameter of said balls;
a resilient counter pressure cushion being arranged in each groove of said second disc in opposite relation to said first disc to resiliently press the balls into frictional contact with said frictional surface of said first disc.

4,370,773
TOOTHBRUSH
Joseph Hadary, 5405 Linden Ct., Bethesda, Md. 20014
Filed Jul. 10, 1980, Ser. No. 167,362
Int. Cl.³ A46B *9/10*
U.S. Cl. 15—172 8 Claims

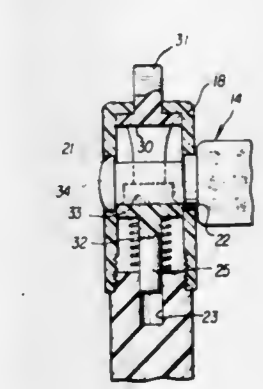

1. A toothbrush comprising:
an elongate handle means having opposite end portions, one of said end portions comprising a hollow, diametrically enlarged base capable of supporting the toothbrush in an upright position and of a size to receive and store a bristle head therein;
the other end of the handle means comprising an elongate, reduced diameter shaft having an axial bore in the end thereof;
a tubular member fixed to the end of said shaft and having a pair of diametrically aligned openings in the side thereof;
a bristle head adjustably carried by the handle means at said

other end thereof and including a bristle head shaft projecting therefrom, said bristle head shaft extending at approximately a right angle to the axis of the handle means and releasably adjustably engaged with the handle means to support the bristle head in adjusted positions on the handle means, and bristles on the bristle head extending in a direction mutually perpendicular to the axis of the handle means and the axis of the bristle head shaft;

said bristle head shaft extending through the aligned openings in the tubular member having a polygonal cross sectional configuration; and

bristle head retaining means carried in the tubular member for selective engagement with the bristle head shaft to prevent it from rotating and to retain it on the handle means, said retaining means having a channel shaped and sized complementally to the bristle head shaft and being actuatable through the end of the handle means for releasing the bristle head.

4,370,774
WINDSHIELD WIPER ASSEMBLY
Herbert Bienert, Besigheim; Dieter Hanselmann, Aldingen; Alfred Kohler, and Hans Prohaska, both of Bietigheim-Bissingen, all of Fed. Rep. of Germany, assignors to ITT Industries, Inc., New York, N.Y.
Filed May 25, 1979, Ser. No. 42,305
Claims priority, application Fed. Rep. of Germany, Jan. 6, 1978, 2824014
Int. Cl.³ B60S *1/34*
U.S. Cl. 15—250.2 **18 Claims**

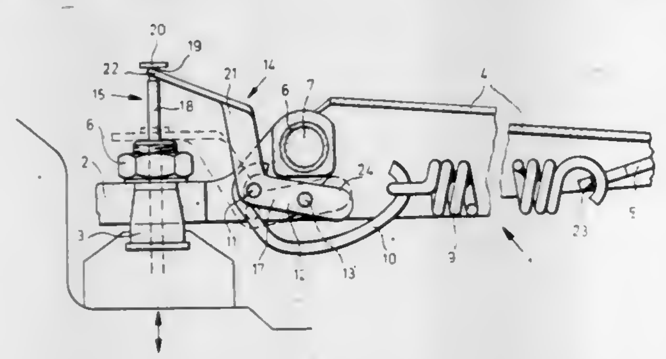

1. A wiper assembly for a windshield on a vehicle comprising:
a wiper motor shaft, and a wiper arm, said wiper arm comprising:
a wiper blade;
a wiper rod carrying said wiper blade;
a link coupled to said wiper rod;
a fastening member articulated to said link and mounted on said wiper shaft;
a wiper arm spring having one end connected to said wiper rod;
a lever pivotally connected to said fastening member;
a holding pin carried by said lever and coupled to the other end of said spring; and
actuating means operable while said wiper arm is operating for moving said lever to selectively place said holding pin in first and second predetermined positions, whereby when said holding pin is in said first or said second predetermined position, said wiper blade is urged against said windshield at a first or a second level of pressure, respectively; the direction of movement of said holding pin between said first and second predetermined positions being approximately perpendicular to the longitudinal axis of said spring.

4,370,775
MULTI-PURPOSE CONNECTOR
Johan H. van den Berg, Hasselt, and Robert T. Le Sausse, Brussels, both of Belgium, assignors to Champion Spark Plug Europe, S.A., Virton, Belgium
Filed Mar. 27, 1981, Ser. No. 248,256
Claims priority, application France, Apr. 11, 1980, 80 08172
Int. Cl.³ B60S *1/40*
U.S. Cl. 15—250.32 **17 Claims**

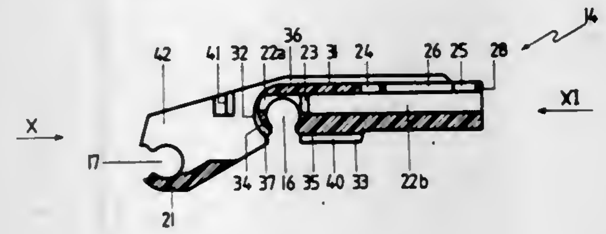

1. A connecting device (**14,15**) for fitting a wiper blade selectively to a wiper arm of a first-type (*3a,3b*) or to a wiper arm of a second type (*1a,1b, 2a, 2b*) wherein the superstructure (**9**) of the wiper blade has a pivot pin (**13**) upon which said connecting vice (**14,15**) is fitted by means of first attaching means (**16**) connected to said pivot pin, characterized in that said connecting device further comprises a second spaced apart means (**17**) for being alternately attached to said pivot pin (**13**).

4,370,776
VACUUM CLEANER FOR HOUSEHOLD AND INDUSTRIAL APPLICATION
Günter R. J. Kullik, Meinerzhagen, Fed. Rep. of Germany, assignor to Progress-Elektrogeräte Mauz & Pfeiffer GmbH & Co., Stuttgart, Fed. Rep. of Germany
Filed Aug. 7, 1981, Ser. No. 291,101
Claims priority, application Fed. Rep. of Germany, Aug. 8, 1980, 3030066
Int. Cl.³ A47L *9/28*
U.S. Cl. 15—319 **16 Claims**

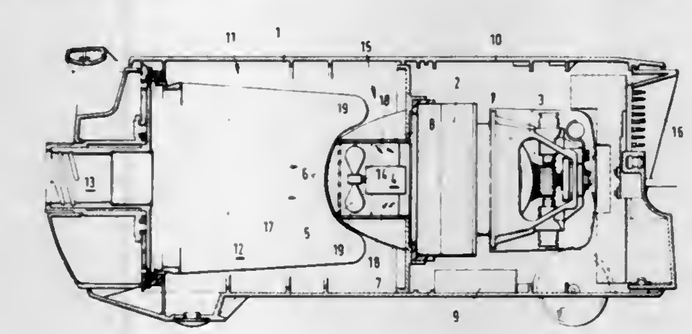

1. A vacuum cleaner for home and industry, comprising:
a housing having an inlet for drawing in dirt-laden air with a working air flow, and an outlet for discharging environmentally acceptable air;
an electric motor mounted in said housing;
a suction fan mounted in said housing and driven by said electric motor for generating said working air flow in the form of a vacuum flow;
an electrical converter in the form of a generator mounted in said housing and driven by said working air flow, said generator detecting the strength of said working air flow; and
a regulating and control circuit associated with said housing for regulating the speed of said electric motor, the output of said generator being connected with said regulating and control circuit.

4,370,777
ELECTRIC MOTOR CONTROL FOR VACUUM CLEANER
Peter Woerwag, Stuttgart, Fed. Rep. of Germany, assignor to Duepro AG, Romanshorn, Switzerland
Filed Nov. 28, 1980, Ser. No. 211,353
Claims priority, application Fed. Rep. of Germany, Nov. 28, 1979, 2947994
Int. Cl.³ A47L *9/00*
U.S. Cl. 15—339 **5 Claims**

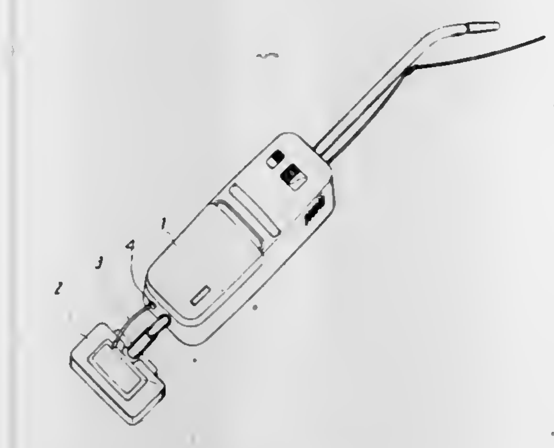

1. A vacuum cleaner comprising:
a housing having a suction nozzle orifice;
a cylindrical brush rotatably mounted by said housing in said orifice;
a first motor drivingly connected to said brush for rotating said brush;
a suction motor connected to produce suction through said nozzle shaped orifice;
a power source;
an rpm control device connected to said power source; and
switch means for connecting said first motor and said suction motor individually either to said rpm control device or directly to said power source, whereby said first motor and said suction motor can be connected: in parallel with each other to said rpm control device; in parallel with each other directly to said power source; and separately with one of said motors connected to said rpm control device and the other of said motors connected directly to said power source.

4,370,778
METHOD, A BINDER, AND AN APPARATUS FOR BINDING SAUSAGE CASINGS
Erik Madsen, Jens Juulsvei 13, 8260 Viby J., Denmark
Continuation of Ser. No. 962,917, Nov. 22, 1978, abandoned, which is a continuation-in-part of Ser. No. 748,158, Dec. 7, 1976, abandoned. This application Dec. 1, 1980, Ser. No. 211,806
Claims priority, application United Kingdom, Dec. 12, 1975, 51015/75; Mar. 23, 1976, 11700/76; Nov. 23, 1977, 48826/77
Int. Cl.³ A22C *15/00*
U.S. Cl. 17—45 **30 Claims**

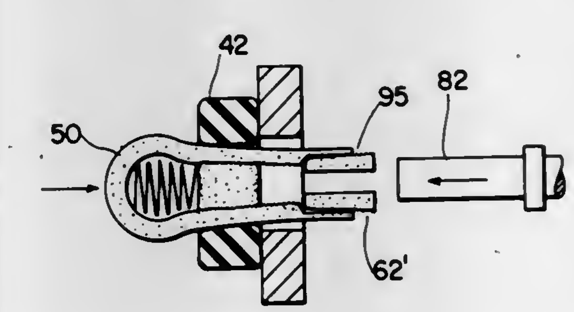

1. A sausage binder comprised of two or more plastic elements being assemblable to form a closed, split clamping ring about a constricted area of a sausage casing and adapted to be rigidly anchored together in this shape, said elements comprising a U-shaped element having a pair of legs and a cross element having opposed end surfaces mountable so as to bridge and be secured with said end surfaces disposed between opposed inner portions of the legs of said U-shaped element, wherein said cross element is comprised of two half-pieces, and said half-pieces are provided with groove and ridge surfaces for interfitting with each other.

4,370,779
METHOD AND APPARATUS FOR INTERMITTENTLY DISPENSING FLOWABLE FOODSTUFF
Dieter Meier, Kirchlinteln, Fed. Rep. of Germany, assignor to Vemag, Verden, Fed. Rep. of Germany
Filed May 19, 1980, Ser. No. 151,088
Claims priority, application Fed. Rep. of Germany, May 26, 1979, 2921427
Int. Cl.³ A22C *11/08;* **G01F** *13/00*
U.S. Cl. 17—49 **14 Claims**

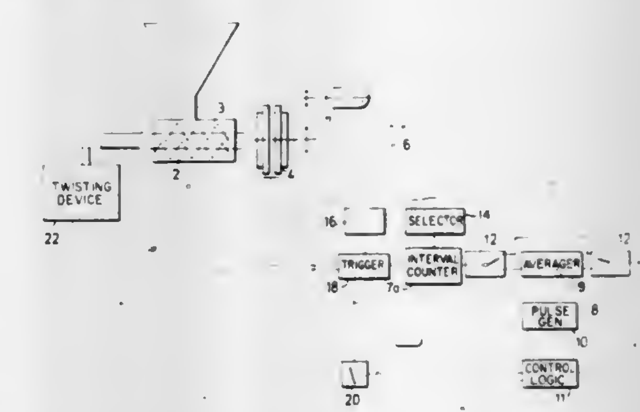

1. In a method for intermittently dispensing a flowable foodstuff into containers in portions of a predetermined size including the steps of conveying the foodstuff with a conveyor into a container, braking the conveyor so as to deliver a portion of foodstuff into a container, replacing the container with a fresh container, and conveying another portion into the fresh container, the improvement comprising the steps of measuring a terminal mass of the foodstuff flowing into the container during the step of braking, forming a difference value between the portion of predetermined size and the measured terminal mass, and thereafter initiating the braking step after a quantity of the foodstuff has been conveyed into the fresh container which equals the difference value so that the terminal mass continuing to flow into the fresh container after the initiating step supplies sufficient additional foodstuff to bring the portion in the fresh container to the predetermined size.

4,370,780
PROCESS AND DEVICE FOR AXIAL SHIRRING OF A TUBULAR MATERIAL USING AN AIR STREAM
Gunter Kollross, AM Wallerstadter Weg 20, D-6081 Dornheim, Fed. Rep. of Germany
Filed Dec. 29, 1980, Ser. No. 220,893
Claims priority, application Fed. Rep. of Germany, Dec. 29, 1979, 2952715
Int. Cl.³ A22C *13/02*
U.S. Cl. 17—49 **14 Claims**

1. A process for axial shirring of a thin walled tubular material such as a sausage casing material, comprising the steps of:
delivering the tubular material axially along a mandrel which braces the interior thereof, as the forward end of the tubular material engages a back-up means,
and axially compacting the tubular material, as it is being delivered along the mandrel, by forming shirrings therein by directing at least one air stream against the tubular material in a direction which is toward the direction of travel of the tubular material and oblique relative to the

axis of the tubular material, wherein the air stream force revolves about the axis of the tubular material.

6. A device for axial shirring of a thin walled tubular material such as a sausage casing material, comprising:

a mandrel means for receiving a tubular material movable therealong and for bracing the interior of the tubular material, a back-up positioned to be engaged by the forward end of the tubular material which has been moved axially along the mandrel,

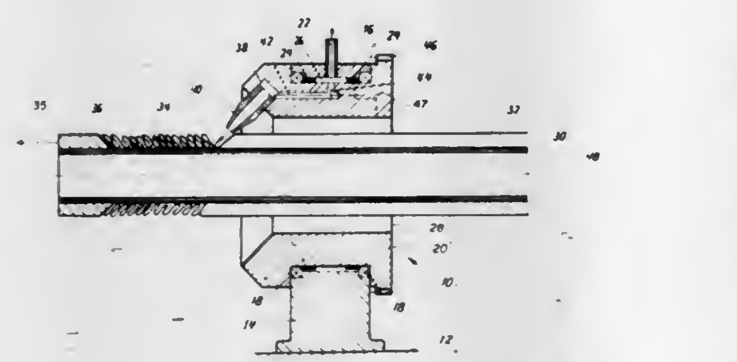

shirring means for axially compacting the tubular material, as it moves along the mandrel, by forming shirrings therein, said shirring means comprising means for delivering at least one air stream against the tubular material toward the direction of travel of the tubular material and obliquely relative to the axis of the tubular material,

and means for causing the force of the air stream to revolve about the axis of the tubular material.

4,370,781
CLEARER DEVICE PROVIDED ABOVE DRAFT ROLLS
Yoshio Murao, No. 6-8, 3-chome, Masuizumi, Kanazawa-shi, Japan
Filed Dec. 2, 1980, Ser. No. 212,128
Claims priority, application Japan, Dec. 3, 1979, 54/167811[U]
Int. Cl.^{3} D01H *5/62*
U.S. Cl. 19—245 3 Claims

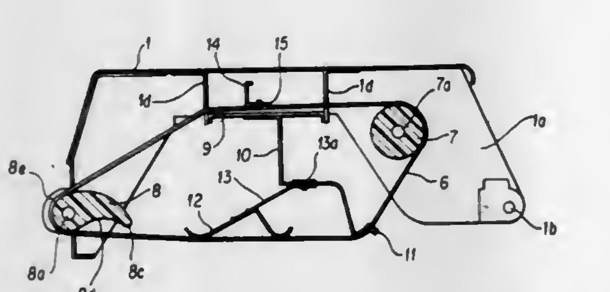

1. A clearer device of a plurality of draft rolls, including top rolls, within a drawing frame, comprising:

cover means having one end pivotally secured to said drawing frame and having side plates;

at least one guide member associated with said cover;

at least one rotatable clearer roll associated with said cover;

at least one endless clearer member extending around said at least one guide member and said at least one clearer roll, said at least one clearer member being positioned so as to contact said top draft rolls when said cover is pivoted in a first closed position;

at least one pressure member resiliently associated with said cover and adapted to pressure said at least one endless clearer member into contact with said top draft rolls;

means for intermittently driving said at least one rotatable clearer roll; and

comb means associated with said cover, said comb means being positioned in angularly adjustable contact with said at least one clearer member, wherein said comb is in contact with the top course of said at least one clearer member and said comb is secured to the bottom of an L-shaped lateral bar, the central portion of which is adjustably held on a support member; and wherein said guide members each include beak portions having curved lower surfaces cooperable with one of said top rolls, and further include lateral guide walls, whereby said endless clearer member is guided between said one top roll and said guide member.

4,370,782
BELT RETAINER
John A. Aronica, Southboro, Mass., assignor to The Kendall Company, Walpole, Mass.
Filed Aug. 25, 1980, Ser. No. 180,681
Int. Cl.^{3} A41B *9/00*
U.S. Cl. 24—198 3 Claims

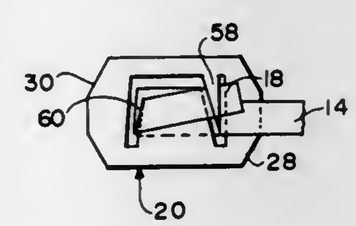

1. A disposable belt retainer for securing a non-apertured belt of a sterile operating room gown, said belt having one end attached to said gown adjacent the waist of said gown and a free end extending around said waist,

said disposable belt retainer comprising,

a generally rectangular strip of semi-rigid deformable material having a back surface adapted to be attached to said gown, a front surface, opposite generally vertical edges, top and bottom edges connecting said opposite vertical edges, and a continuous belt retaining and locking cutout slot spaced inwardly from said edges, said cutout slot having an upper horizontal belt inserting portion adjacent said top edge, a vertical belt receiving portion extending downwardly from each of the opposite ends of said horizontal belt inserting portion adjacent each of said vertical edges, and two vertical belt clamping and locking slit portions, one thereof being connected to and extending upwardly from the lower end of each of said vertical belt receiving portions

said cutout slot defining

a central vertically extending tab connected to said strip adjacent said strip bottom edge with an upper edge portion adjacent to and spaced downwardly from said strip top edge, said central tab having a downwardly extending tab extension connected to said central tab upper edge portion adjacent one side edge of said central tab and positioned adjacent one of said strip side edges, and

a side downwardly extending tab connected to said strip adjacent said strip top edge and positioned between the vertical edge of said central tab opposite said tab extension and the opposite one of said strip side edges

whereby, said belt may be inserted into said retainer to secure it therein by grasping its free end to extend it horizontally, then moving a horizontally extending belt portion bodily downwardly through said upper horizontal belt inserting slot portion behind said central tab into said downwardly extending vertical belt receiving slot portions and finally moving said horizontally extended belt portion upwardly into said upwardly extending belt clamping and locking slit portions

the deformability of said tabs permitting release of said belt by grasping its free end and pulling said secured belt portion forwardly out of said retainer by bending said tabs and tab extension.

4,370,783
YIELDABLE LOAD RELEASE CONNECTOR
Jack W. Fretwell, Jr., 13354 Feldman Pl., Herndon, Va. 22070
Continuation of Ser. No. 940,289, Sep. 7, 1978, abandoned. This application Dec. 11, 1980, Ser. No. 216,011
Int. Cl.^{3} F16G *11/00*
U.S. Cl. 24—201 TR 4 Claims

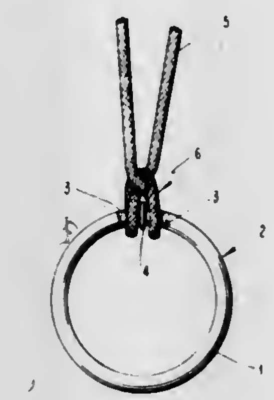

1. Load release connector for connecting a first and a second object comprising a coil of resilient plastic rod extending for at least about 540° and having two free ends, and fastening means attached to said coil at a point spaced substantially equidistant from each said end for fastening said coil to said first object, said coil encircling said second object thereby connecting said two objects, said resilient plastic rod having a plastic memory enabling it to return to its coil form after application and release of forces tending to straighten it and having high fatigue strength enabling it to be flexed repeatedly by said straightening forces without substantial loss of said plastic memory, said coil of resilient plastic rod being extended from its coil shape into an oblong shape and said free ends being further from said fastening means when forces are applied causing said first and second objects to move away from each other, said second object being released when said coil of resilient plastic rod is extended sufficiently far that the ends thereof separate to permit said second object to pass there-between, said resilient plastic rod while extended into said oblong shape resisting further moving away from each other of said first and second objects and urging said objects toward each other.

4,370,784
BELTING FABRIC
John Turnbull, Charlotte, N.C., assignor to Celanese Corporation, New York, N.Y.
Division of Ser. No. 15,974, Feb. 28, 1979, Pat. No. 4,298,648. This application Apr. 7, 1981, Ser. No. 251,814
Int. Cl.^{3} B65N *71/00*
U.S. Cl. 28—166 13 Claims

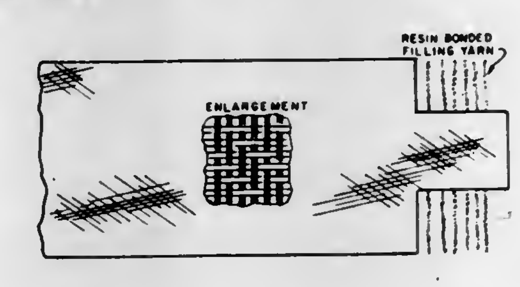

1. A process for preparing an improved woven coilable belting fabric for use in a seat belt harness, in which the warp yarns constitute at least 70 percent of the fabric by weight, by weaving warp yarns along the length of the belt and multifilament filling yarns transverse to the length of the belt, the improved belt having reduced tendency to twist and jam a conventional retractor mechanism that coils the belt upon activation of a retraction mechanism, which process comprises the steps of:

(i) applying an uncured heat-curable resin to said multifilament filling yarns prior to weaving;

(ii) weaving a fabric wherein said filling yarns constitute less than 30 percent by weight of said fabric; and

(iii) curing said uncured resin after weaving,

whereby said woven coilable fabric has both high lateral stiffness and high conversion efficiency load from the individual warp yarns to fabric along the warp yarns.

4,370,785
METHOD FOR MAKING ULTRACOUSTIC TRANSDUCERS OF THE LINE CURTAIN OR POINT MATRIX TYPE
Donello Assenza, and Massimo Pappalardo, both of Rome, Italy, assignors to Consiglio Nazionale Delle Ricerche, Italy
Filed Jun. 6, 1980, Ser. No. 157,281
Claims priority, application Italy, Jun. 22, 1979, 49520 A/79
Int. Cl.^{3} H01L *41/22*
U.S. Cl. 29—25.35 14 Claims

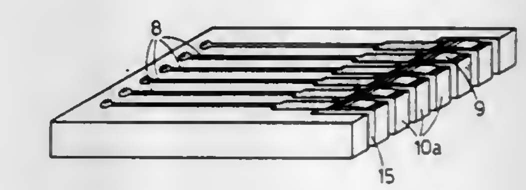

1. A method for making ultraacoustic transducers of the curtain line and point matrix type, comprising:

providing a bar (10) of piezoelectric material having a polarization axis and having a ratio between its width and its thickness substantially equal to one;

metalizing both faces (2,4) of said bar which are perpendicular to the polarization axis;

connecting said bar (10) along one (3) of the non-metalized faces thereof to a face of a substrate (5);

depositing at least one metallic electrode (8) on both opposite faces (6,7) of said substrate (5) which are normal to said face of said substrate (5) connected to said piezoelectric bar (10);

connecting said metallic electrodes (8) to said metalized faces (2,4) of said piezoelectric bar (10) by depositing a layer (9) of conductive epoxy resin on the plane of said two opposite faces (6,7) of said substrate (5) which are normal to said face (3) connected with said piezoelectric bar (10); and coating the whole assembly comprising said bar (10), substrate (5) and electrodes (8), with a complete jacket (11) of epoxy resin.

4,370,786
WIRE LEAD FORMING MACHINE
John D. Butler, New Berlin, Wis., assignor to Artos Engineering Company, New Berlin, Wis.
Filed Feb. 20, 1981, Ser. No. 235,443
Int. Cl.^{3} B21F *23/00, 1/02*
U.S. Cl. 29—33 M 6 Claims

1. In a wire lead forming machine wherein a cable length is constrained to stepwise motion transversely to its length in one direction along a defined path, to a stripping station at which insulation is stripped off of one end portion of each of a pair of wires of the cable length by means of stripping devices that rotate on fixed parallel axes, and subsequently to a plug attachment station at which said wire end portions are brought into axially inserted relationship to respective tubular plug legs that are in spaced parallel relation to one another, means for controlling the position and orientation of said end portions of said wires at each of said stations to ensure that they will have coaxial relationship to said rotary devices at the stripping station and to said plug legs at the plug attachment station, said means comprising:

A. a wire holding and bending device at each of said stations for receiving said end portions of said wires when they are substantially straight and laterally adjacent to one another

and for bending said end portions apart to establish their tip portions in spaced substantially parallel relationship;

B. straightening means at a straightening station along said path that is between and spaced from said stripping and plug attachment stations, said straightening means comprising

(1) a first pair of jaws relatively movable between an open position at which said end portions of the wires are receivable between the jaws as the cable length is

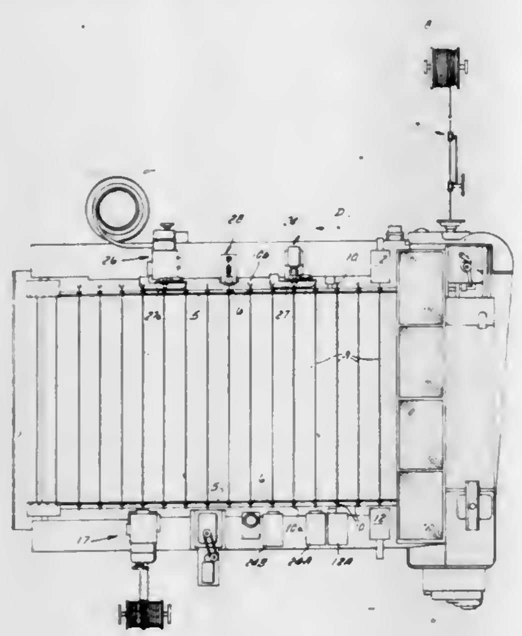

moved into said straightening station and a closed position at which opposed confining surfaces on the jaws confine said end portions to substantially coplanar relationship, and

(2) a second pair of jaws relatively movable towards and from one another between said confining surfaces and having opposed pusher surfaces which are substantially normal to said confining surfaces and whereby confined end portions of the wires are displaced into substantially straight laterally adjacent relationship.

4,370,787

APPARATUS FOR SECURING TO FORMAT CYLINDERS FORMAT PLATES FOR THE ACCURATE TRANSFER OF APPLICATIONS OF ADHESIVE

Richard Feldkämper, Lengerich, Fed. Rep. of Germany, assignor to Windmoller & Holscher, Lengerich, Fed. Rep. of Germany

Filed Dec. 1, 1980, Ser. No. 211,672

Claims priority, application Fed. Rep. of Germany, Dec. 4, 1979, 2948744

Int. Cl.³ B21B *27/00;* **B41F** *27/10*

U.S. Cl. 29—124 **6 Claims**

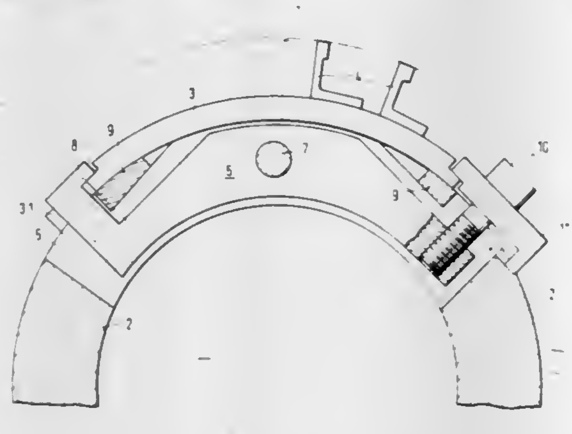

1. Apparatus for securing a format plate to a format cylinder comprising:

a format cylinder having a peripheral surface thereof provided with two axially spaced recesses having circumferential lengths greater than the circumferential width of a format plate to be secured to said cylinder;

a two-armed lever positioned in each said recess and having first and second ends;

means for pivotally mounting said levers in said recesses for pivotable movement about central portions of the levers;

gripper means positioned at the first ends of said levers for engaging and securing a first axially extending longitudinal edge of the format plate;

clamping means for clamping and securing a second axially extending longitudinal edge of the format plate, said clamping means having first portions supported by the format cylinder, second portions engaging the format plate, and holes passing therethrough, tapped holes being formed in the second ends of said levers; and

clamping screws having shanks passing through said holes of said clamping means and threaded ends engaged in said tapped holes of said second lever ends whereby rotation of said clamping screws urges said clamping means and said gripper means into clamping engagement with the format plate.

4,370,788

METHOD OF LINING CYLINDRICAL BORES

Archibald J. S. Baker, Wantage, England, assignor to Cross Manufacturing Company Limited, Oxfordshire, England

Filed Sep. 5, 1980, Ser. No. 184,239

Claims priority, application United Kingdom, Sep. 7, 1979, 7931186

Int. Cl.³ B23P *11/00*

U.S. Cl. 29—156.4 WL **9 Claims**

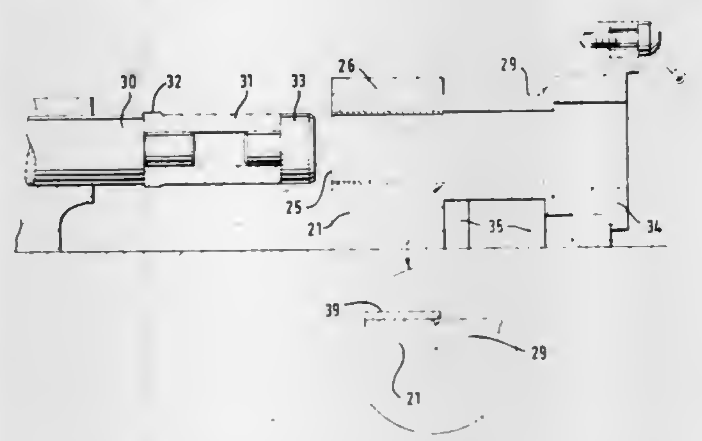

1. A method of lining a cylindrical bore, which method comprises the steps of:

(a) providing a block having a cylindrical bore;

(b) selecting a strip of lining material having free ends and of such a length that when said strip is formed into a cylindrical liner for said cylindrical bore and then pressed into said cylindrical bore, said formed strip is subjected to hoop-stress;

(c) providing a jig-plate defining a groove of arcuate cross-section with a radius of curvature substantially equal to that of the unlined bore and a co-operable mandrel which has an at least partially circular cross-section the diameter of which is substantially equal to that of the lined bore;

(d) positioning said strip of lining material in said jig-plate and employing said jig-plate to press said selected strip into said groove;

(e) retaining the partially-formed strip in the groove of the jig-plate and employing jig cheek-pieces each of which defines a part-circular groove of substantially the same radius of curvature as the groove in the jig-plate further to deform said strip by moving said jig cheek-pieces with respect to said jig-plate to a position in which said cheek-piece grooves and said jig-plate groove together define a cylinder of substantially the same diameter as that of the unlined bore, thereby enclosing and deforming said strip with said free ends abutting one another to form a cylindrical liner which is subjected to hoop-stress within the jig; and

(f) pressing the thus-formed liner out of the jig into the cylindrical bore whilst maintaining the hoop-stress within said liner thereby forming a lined block.

4,370,789

FABRICATION OF GAS TURBINE WATER-COOLED COMPOSITE NOZZLE AND BUCKET HARDWARE EMPLOYING PLASMA SPRAY PROCESS

Peter W. Schilke, 4 Hempshire Ct., Scotia, N.Y. 12302; Myron C. Muth, R.D. #3, Western Ave., Amsterdam, N.Y. 12010; William F. Schilling, 301 Garnsey Rd., Rexford, N.Y. 12148, and John R. Rairden, III, 6 Coronet Ct., Schenectady, N.Y. 12309

Filed Mar. 20, 1981, Ser. No. 246,068

Int. Cl.³ B21K *3/04*

U.S. Cl. 29—156.8 H **4 Claims**

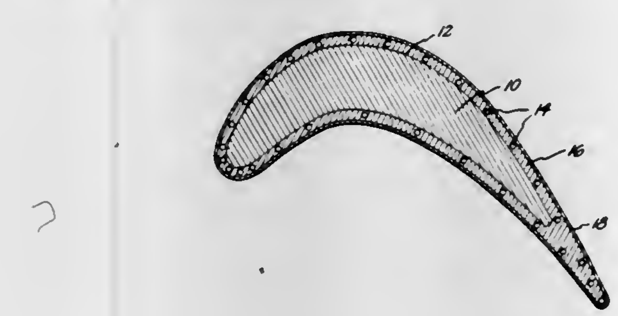

1. A method for fabricating composite nozzle and bucket hardware for a gas turbine, comprising the steps of:

providing a structural framework in the form of a spar having tubes for coolant near the surface thereof; and

applying a dense, non-porous coating of high thermal conductivity copper alloy to the structural framework by means of low pressure plasma arc spraying in a thickness of at least 50 mils (1.27 mm) so as to cover the coolant tubes and to allow excess coating for smooth machining.

4,370,790

T-JOINT METHOD AND PRODUCT

Keith S. Rodaway, Santa Monica, Calif., assignor to Everest & Jennings, Inc., Camarillo, Calif.

Filed Dec. 19, 1980, Ser. No. 218,218

Int. Cl.³ B21D *53/00*

U.S. Cl. 29—157 T **2 Claims**

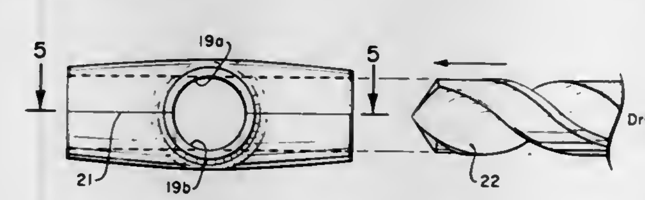

1. A method of making a tubular T-joint, including the steps of:

(a) forming a cruciform-shaped stamping into a main cross-piece portion having opposite edges diverging from each other from each end towards the center and having semi-cylindrical stem portions extending in opposite directions from the central portion of said main cross-piece portion, each of said stem portions having their opposite edges diverging from their free ends towards the cross-piece portion;

(b) rolling the cross-piece portion into a cylindrical shape by bringing its said opposite edges together to form a cross-piece, the semi-cylindrical portions thereby being brought together to form a stem;

(c) welding the opposite edges of the cross-piece and the opposing edges of the semi-cylindrical stem portions together to form a T-joint;

(d) drilling through the cross-piece with a drill of diameter corresponding to the central inside diameter of the cross-piece to thereby remove material as the drill enters one end and exits through the opposite end on either side of the central portion of the cross-piece to provide tapered walls with a uniform inside diameter for the cross-piece; and

(e) drilling into said stem with the same diameter drill used for said cross-piece to remove material at the entrance portion of the stem

whereby the wall thickness of the resulting T-joint is greater at the intersection of the cross-piece and the stem than at the opposite ends of the cross-piece and entrance ends of the stem.

4,370,791

METHOD OF FORMING AN ADJUSTABLE PROSTHETIC ELEMENT

Michael T. Wilson, 1259 Monument Blvd., Concord, Calif. 94520

Division of Ser. No. 11,126, Mar. 19, 1979, Pat. No. 4,283,800. This application Mar. 27, 1981, Ser. No. 248,555

Int. Cl.³ B23P *19/00*

U.S. Cl. 29—407 **4 Claims**

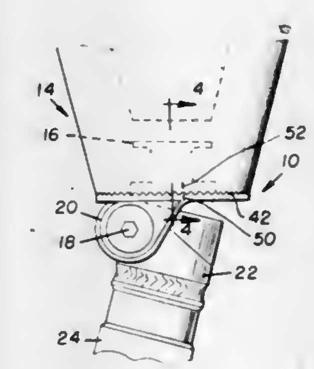

1. A method for forming a human prosthesis of at least two elements in which one element is incrementally rotatable in the transverse plane relative a second element, the method comprising the steps of:

a. providing a first prosthetic element having a toothed superior surface;

b. providing and securing retention means to said first prosthetic element for removably retaining a molded plastic socket adjacent the first prosthetic element;

c. providing a removable spacer element between the retention means and the superior surface of the first prosthetic element; and

d. forming from plastic material, superior to the first prosthetic element, a second prosthetic element in the form of a prosthetic socket about the retention means and said removable spacer element using the toothed superior surface to form the inferior surface of the socket.

4,370,792

METHOD OF COVERING SURFACES WITH TENSILE SHEET MATERIALS

Warren G. Watts, 1 Little La., Westport, Conn. 06880

Filed Aug. 10, 1981, Ser. No. 291,411

Int. Cl.³ B23Q *17/00*

U.S. Cl. 29—407 **12 Claims**

1. A method for covering a surface with a tensile sheet material comprising the steps of:

(a) attaching a frame to the surface to be covered, with the frame being made of tracks having at least one longitudinal slot with a pair of confronting side walls which are ridged,

(b) cutting the material to a width slightly greater than the distance separating the tracks plus twice the depth of a slot,

(c) inserting one edge of the material and an elastic spline over the material into a slot, whereby the spline is substantially flush with a face of the track,

(d) inserting the opposite edge of the material into a slot of the opposite track with an elastic spline over the material whereby the spline is substantially flush with the face of the track,

(e) setting the spline and material halfway to the bottom of

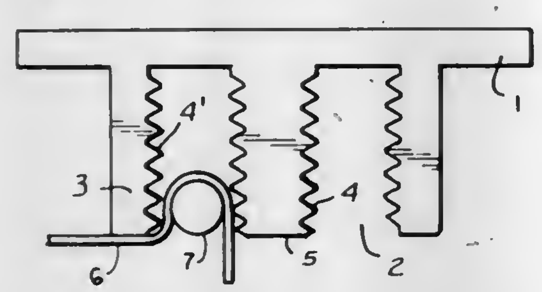

the slot for one edge and then repeating it for the other edge, and

(f) setting the spline and material all the way to the bottom of the slot for one edge and then repeating it for the other edge, whereby the material is stretched completely taut between the tracks.

4,370,793

METHOD OF COUPLING TWO METALLIC MEMBERS

Hisanobu Kanamaru, Higashiishikawa; Moisei Okabe, Tokyo; Hideo Tatsumi, Sumiyoshi, and Akira Tohkairin, Tahiko, all of Japan, assignors to Hitachi, Ltd., Tokyo, Japan

Filed Jan. 3, 1980, Ser. No. 109,266

Claims priority, application Japan, Jan. 10, 1979, 54-699

Int. Cl.³ B23P *11/02;* **B21D** *39/00;* **B23P** *11/00, 14/02*

U.S. Cl. 29—446 **21 Claims**

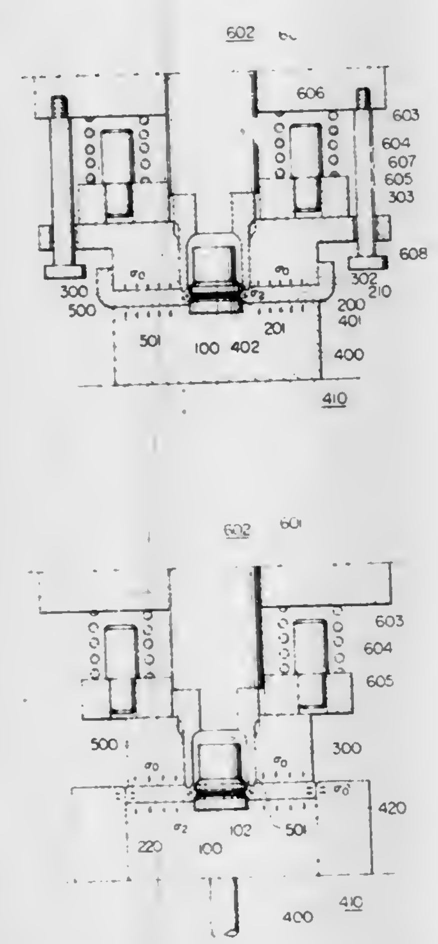

1. A method of coupling a first metallic member and a second metallic member, the method comprising the steps of:

forming a circumferentially extending groove in a joint face of the first metallic member;

forming uneven portions along a bottom of the groove;

assemblying the first metallic member and second metallic member by disposing the joint face of the first metallic member substantially concentrically with a joint face of the second metallic member;

applying an actual annular prestress to the second metallic member at least in a vicinity to be cold worked; and

then cold working an annular portion of the second metallic member with a first work member in a vicinity of the joint face so as to cause a plastic deformation and cause a portion of the second metallic member to fluidize and flow into the groove while applying said actual prestress to the second metallic member at least in a vicinity of said cold work portion by a second work member separate from said first work member for the colding working so as to prevent substantial flow of the second metallic member except into the groove, thereby coupling the first metallic member to the second metallic member.

21. A method of coupling a first metallic member and a second metallic member, the method comprising the step of:

forming a circumferentially extending groove in a joint face of the first metallic member;

assemblying the first metallic member and second metallic member by disposing the joint face of the first metallic member substantially concentrically with joint a face of the second metallic member;

applying an actual annular prestress to the second metallic metallic member at least in a vicinity to be cold worked; and

then cold working an annular portion of the second metallic member with a first work member in a vicinity of the joint face so as to cause a plastic deformation and cause a portion of the second metallic member to fluidize and flow into the groove while applying said actual prestress to the second metallic member at least in a vicinity where said cold working is effective by a second work member separate from said first work member so as to substantially prevent an influencing of said cold working to the second metallic member except for a flow of the second metallic member into the groove thereby coupling the first metallic member to the second metallic member.

4,370,794

CLINCH NUT AND METHOD OF INSTALLING SAME

Alfred A. Bien, West Bloomfield, and Frederick W. Heidt, Fenton, both of Mich., assignors to Multifastener Corporation, Detroit, Mich.

Continuation-in-part of Ser. No. 931,696, Aug. 7, 1978, abandoned. This application Oct. 1, 1980, Ser. No. 193,327

Int. Cl.³ B21D *39/00;* **B23P** *11/00*

U.S. Cl. 29—509 **2 Claims**

1. A method of installing a nut in a panel, comprising the steps of:

punching a rectangular opening in said panel,

inserting and press-fitting the projecting rectangular pilot of a metal nut in said panel opening, said panel having a thickness greater than the pilot height, said pilot having a generally flat end face and side faces inclined inwardly from said end face and said nut having opposed laterally extending flanges extending from said pilot portion, said flanges having abutment faces spaced from the top faces of said flanges and extending laterally from said inclined side faces to a perpendicular edge spaced from the side faces of said flanges, said inclined pilot side faces smoothly blending into said pilot end face in generally opposed cylindrical segment rounds and into said flange abutment faces in opposed generally cylindrical segment rounds and fillets which promote panel flow beneath said inclined side faces and the volume defined by the projection of said abutment faces above said flanges being less than four times greater than the volume of the spaces beneath said inclined pilot faces, said opposed cylindrical segment round surfaces of the pilot end face forming opposed rounded projections in the walls of the panel opening at the leading edge of the pilot, and

ramming said opposed abutment faces of said nut flanges against the opposed panel face adjacent said opening in a single continuous stroke, deforming and displacing the panel beneath said inclined pilot side faces and continuing to force said abutment faces into said panel to seat said top faces against said panel and fill the spaces beneath the

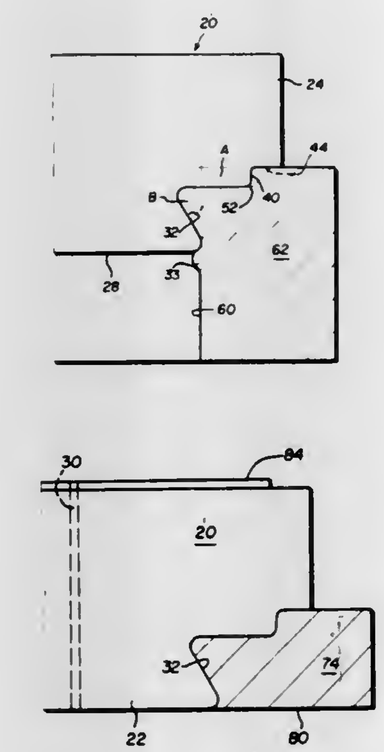

inclined side pilot faces, permanently retaining said nut in said panel opening.

4,370,795

APPARATUS AND METHODS TO PROVIDE SHORING DURING THE MANUFACTURING OF A REEFER CONTAINER

Robert B. Reidenbach, Honeybrook, Pa., assignor to The Budd Company, Troy, Mich.

Filed Nov. 24, 1980, Ser. No. 209,545

Int. Cl.³ B29D *23/00*

U.S. Cl. 29—559 **8 Claims**

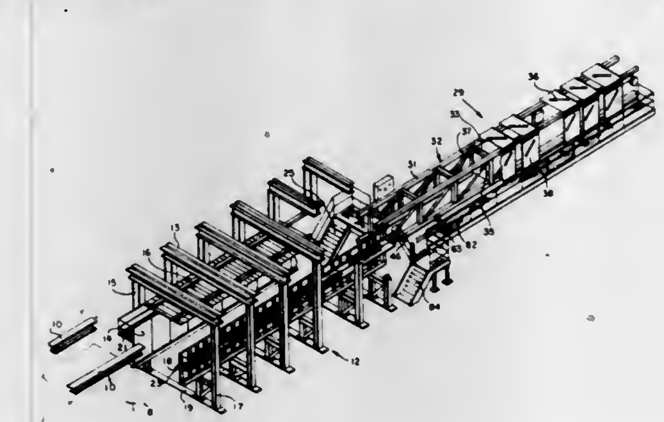

1. Apparatus for providing external and internal shoring for the roof and side walls of an open container to permit foam material to be inserted under pressure into cavitites therein, comprising:

a. a first fixed station including first selectively movable shoring members;

b. said first station being disposed to receive said container with the external surfaces of said roof and side walls thereof in alignment with said first shoring members to permit external shoring thereof;

c. a second station including second selectively movable shoring members to provide internal shoring of the internal surfaces of said roof and side walls of said container;

d. said second station including movable mandrel disposed on a fixed platform for holding said second selectively movable members;

e. said movable mandrel comprising a rectangular open frame assembly including a pair of rail elements;

f. means for selectively extending said mandrel from said fixed platform into the open area of said container within said first station to bring said second shoring members into alignment with the interior surfaces of said roof and side walls of said container to permit shoring thereof, and

g. said means for selectively moving said mandrel comprising drive wheels secured to said fixed platform in frictional engagement with said side rail elements and motor means for rotating said drive wheels to extend and retract said side rail elements and said frame assembly into and out of the open area of said container within said first station.

7. A method of shoring the external and internal surfaces of the side walls and roof of an open container with a floor to permit foam insulating material to be inserted under high pressures into cavities within said side walls and ceiling comprising the steps of:

a. providing a first fixed station having a first set of movable shoring members;

b. providing a second station having a fixed platform with a movable mandrel thereon with a second set of movable mandrels;

c. moving said container into said first station with the first set of movable shoring members in alignment with the external surfaces of said side walls and roof;

d. moving said first set of shoring members into contact with said side walls and roof;

e. extending said mandrel away from said fixed platform into the open area inside of said container to align said second set of shoring members with the internal surfaces of said side walls and roof;

f. said step of extending said mandrel comprising rolling said mandrel from said fixed platform on to said floor of said container, and

g. moving said second set of shoring members into contact with the internal surfaces of said side walls and roof.

4,370,796

BALE WAGON

Leon R. Wilson, Box 1612, Kalispell, Mont. 59901

Continuation-in-part of Ser. No. 36,574, May 7, 1979, abandoned, and a continuation-in-part of Ser. No. 81,717, Oct. 3, 1979, abandoned. This application Aug. 12, 1980, Ser. No. 177,332

Int. Cl.³ A01D *87/12*

U.S. Cl. 29—564.3 **12 Claims**

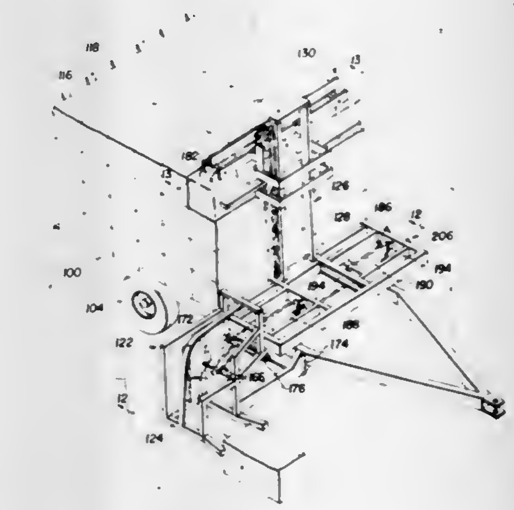

1. In a bale wagom comprising:

(a) a generally rectangular and horizontal bed having at a front end thereof a bale reception area for receiving at least one bale;

(b) a bale pick-up mounted on the side of said bed adjacent said reception area for receiving bales at ground level and depositing them on said reception area;

(c) a vertical tower mounted on said bed
(d) tower moving means for moving said tower forwardly and rearwardly along the longitudinal length of said bed said tower having a first position forward of said bale reception area;
(e) a grappler assembly mounted on said tower for receiving and temporarily retaining at least one bale; and
(f) grappler assembly moving means for moving said grappler assembly upwardly and downwardly along the vertical length of said tower,

the improvement wherein said bale wagon further comprises:
(g) binder cutting means for cutting the binder around bales of hay, said binder cutting means comprising:
(i) binder holding means for holding a portion of binder taut;
(ii) a blade;
(iii) a cam and cam follower one of which is operatively connected to said blade; and
(iv) cam and/or cam follower moving means for moving said cam and said cam follower relative to each other, thereby moving said blade against a portion of binder being held taut by said binder holding means.

4,370,797
METHOD OF SEMICONDUCTOR DEVICE FOR GENERATING ELECTRON BEAMS
Gerardus G. P. van Gorkom, and Arthur M. E. Hoeberechts, both of Eindhoven, Netherlands, assignors to U.S. Philips Corporation, New York, N.Y.
Division of Ser. No. 84,041, Oct. 12, 1979, Pat. No. 4,303,930. This application May 29, 1981, Ser. No. 268,209
Claims priority, application Netherlands, Jul. 13, 1979, 7905470
Int. Cl.[3] H01L *21/223, 21/26*
U.S. Cl. 29—569 R **5 Claims**

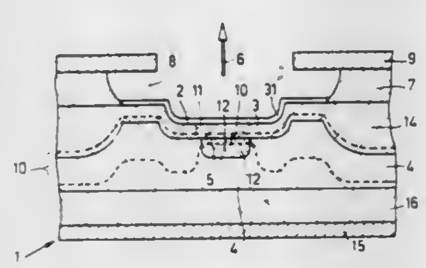

1. A method of manufacturing a semiconductor device for generating an electron beam by avalanche multiplication across a reverse biased p-n junction, said method comprising the steps of:
providing a semiconductor body having a surface, said body having a surface-adjoining n-type conductivity layer and a p-type conductivity layer adjoining the n-type layer, the n-type layer being disposed between the surface of the semiconductor body and the p-type layer, said p-type and n-type layers forming a p-n junction therebetween;
covering the surface of the semiconductor body with a layer of an electrically insulating material;
covering the layer of electrically insulating material with a layer of electrically conductive material;
covering the layer of electrically conductive material with a layer of masking material;
providing an aperture in the mask layer;
etching apertures into the conductive, insulating, and n-type layers through the aperture in the mask layer, the aperture in the conductive layer being larger than the aperture in the n-type layer;
doping the p-type layer through the apertures with acceptor atoms to form a heavily doped p-type region of higher doping concentration than the p-type layer;
removing the mask layer; and
doping the p-type region through the apertures with donor atoms to form a surface-adjoining n-type region in the heavily doped p-type region.

4,370,798
INTERLEVEL INSULATOR FOR INTEGRATED CIRCUIT WITH IMPLANTED RESISTOR ELEMENT IN SECOND-LEVEL POLYCRYSTALLINE SILICON
Jih-Chang Lien, Sugarland, and Te-Long Chiu, Houston, both of Tex., assignors to Texas Instruments Incorporated, Dallas, Tex.
Division of Ser. No. 48,961, Jun. 15, 1979, Pat. No. 4,291,328. This application Jul. 20, 1981, Ser. No. 284,846
Int. Cl.[3] H01L *29/04, 29/78*
U.S. Cl. 29—576 B **6 Claims**

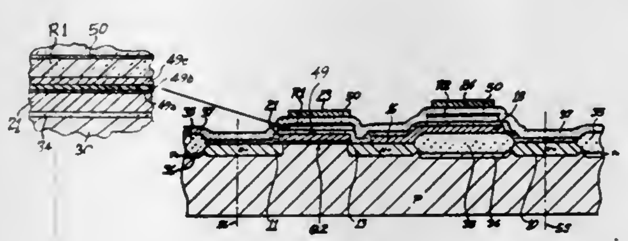

1. A method of making resistor elements in semiconductor integrated circuits, comprising the steps of:
(a) depositing a first level of polycrystalline silicon over the face of a semiconductor body and patterning it to define electrodes of circuit elements on said face and interconnections between electrodes,
(b) forming a triple-level insulator over said first level of polycrystalline silicon, the first level insulator being thermally grown silicon oxide on said first level of polycrystalline silicon, the second level insulator being doped low-temperature deposited silicon oxide densified for smooth step transistors, the third level insulator being undoped low-temperature deposited silicon oxide which acts as a diffusion barrier between the second level insulator and lightly doped resistors in second level polycrystalline silicon,
(c) depositing a second level of polycrystalline silicon on said face and patterning it, the second level partially overlying the first level and overlying some of the circuit elements,
(d) implanting conductivity-determining impurity material into the second level of polycrystalline silicon to provide resistor regions,
(e) introducing conductivity-determining impurity material into selected areas of the second level of polycrystalline silicon to provide connections.

4,370,799
METHOD FOR MANUFACTURING UNFINISHED PARTS FOR PRESSED MATERIAL COMMUTATORS
Joze Potocnik, Idrija, Yugoslavia, assignor to Kolektor p.c., Idrija, Yugoslavia
Filed Nov. 18, 1980, Ser. No. 208,012
Claims priority, application Yugoslavia, Mar. 24, 1980, 817/80
Int. Cl.[3] H01R *43/08*
U.S. Cl. 29—597 **4 Claims**

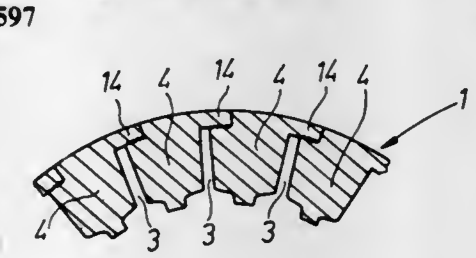

1. A method for manufacturing pressed material commutators from hollow cylindrical copper bodies having an inner surface which includes a plurality of longitudinal grooves separated by inner ridges at a predetermined spacing, the circumferential widths of said inner grooves being initially larger than the desired ultimate widths thereof, said method comprising:
forming a plurality of longitudinal outer grooves in the outer surface of said cylindrical body, said outer grooves each having a bottom wall spaced radially from the longitudinal axis of said body a distance substantially equal to the radial spacing of the bottom walls of said inner grooves from said longitudinal axis, said outer grooves being staggered circumferentially relative to said inner grooves to define a plurality of yieldable cross-pieces; and
shrinking said body by means of radially inwardly directed forces applied uniformly to the outer surface thereof to break said yieldable cross-pieces, the decrease in the widths of said inner grooves being equal to the widths of said outer grooves.

4,370,800
METHOD OF BALANCING ELECTRICAL MACHINE ROTOR
Viktor V. Kuzmin, prospekt Gagarina, 92, kv. 43; Vadim B. Kaplunov, ulitsa Bairona, 138 B, kv. 45, and Boris I. Ljuty, ulitsa Mira, 62, kv. 26, all of, Kharkov, U.S.S.R.
Filed Oct. 29, 1980, Ser. No. 201,905
Claims priority, application U.S.S.R., Nov. 1, 1979, 2829302
Int. Cl.[3] H02K *15/02, 15/16*
U.S. Cl. 29—598 **4 Claims**

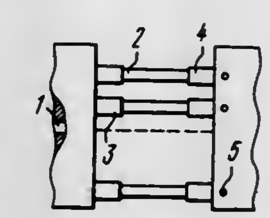

1. A method of balancing a rotor of an electrical machine comprising the following subsequent steps;
starting the liquid cooling system of the rotor winding formed of parallel hydraulic branches on the body of the rotor;
monitoring the variables of cooling conditions in said branches, with the liquid cooling system under operation, for determining temperature asymmetry in the rotor resulting in heat unbalance of the rotor; and
altering hydraulic resistance in said branches so that the proportion of said variables provide the same magnitude of overheating of the liquid at least in each pair of the diametrically arranged branches of the cooling system.

4,370,801
METHOD OF MAKING A THIN FILM MAGNETIC HEAD ASSEMBLY WITH MULTICONDUCTIVE CONNECTING ELEMENTS
Thomas A. Roscamp, Santa Barbara, and George W. Gibson, Los Olivos, both of Calif., assignors to Applied Magnetics Corporation, Goleta, Calif.
Filed Aug. 25, 1980, Ser. No. 180,525
Int. Cl.[3] G11B *5/42*
U.S. Cl. 29—603 **13 Claims**

1. A method of making a thin film magnetic head assembly having a substrate, superstrate and thin film magnetic transducer mounted therebetween wherein the thin film magnetic transducer includes a transducing portion located exterior to adjacent edges of the substrate and superstrate and with conductive leads located interior to and extending between the substrate and superstrate comprising the steps of
mounting on a selected surface of a substrate a thin film magnetic transducer with the transducing portion thereof located adjacent one edge of said substrate which intersects with said selected surface;
positioning a preformed planar conductive connecting member having a thickness at least equal to that of the thin film magnetic transducer and formed of an elongated support section and a plurality of spaced, aligned connecting elements extending substantially perpendicular from the elongated support section wherein the connecting elements include a relatively thin diffusable conductive metal coating located on one side thereof with said one side of the connecting elements having said diffusable conductive metal coating thereon in intimate contact with the conductive leads such that a portion of said connecting elements together with the elongated support section of the planar conductive connecting member extend passed an edge of a substrate other than the one edge adjacent the transducing portion of said thin film magnetic transducer;
placing a superstrate having a preformed layer of insulating bonding material affixed to one surface thereof in alignment with the substrate, thin film magnetic transducer and planar conductive connecting member such that the one edge of the superstrate is located adjacent the transducing portion of the thin film magnetic transducer and the one edge of the substrate with the preformed layer of insulating bonding material in intimate engagement with the planar conductive connecting member to form a sub-assembly thereof having a predetermined space between the surface of the superstrate having the preformed layer of insulating bonding material affixed thereto and the selected surface of the substrate, the dimension of the predetermined space being equal to the sum of the thickness of one of the conductive leads, the planar conductive connecting member and the thickness of the diffusable

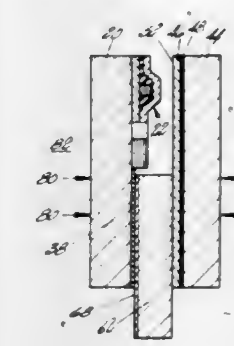

conductive metal coating thereon, said insulating bonding material being selected of a material which is electrically and magnetically compatible with the thin film magnetic transducer and which has a melting point temperature below a thermal stress temperature at which at least one of the electrical characteristics and the magnetic characteristics of the thin film magnetic transducer are permanently distorted;
controllably heating the sub-assembly in a preselected atmosphere which inhibits oxidation and corrosion of the sub-assembly at a heating rate which permits the thermal expansion of the sub-assembly thereof up to a bonding temperature located in a bonding temperature range between the melting point temperature of the insulating bonding material and below the thermal stress temperature;
during the controllably heating, urging the superstrate and the substrate of the sub-assembly together with a clamping force to form a compression boundary between the surface of the connecting elements having the diffusable metal coating layer in intimate contact with the conductive leads enabling the diffusable conductive metal coating to diffuse into both the conductive leads and connecting elements to form a diffused electrical connection therebetween; and
maintaining the heated and clamped sub-assembly at a bonding temperature within the bonding temperature range for a time period sufficient to enable the insulating bonding material to substantially fill the predetermined space between the substrate and superstrate by capillary action to

encapsulate and bond said thin film magnetic transducer, connecting elements and the conductive leads having the diffused electrical connection therebetween into a thin film magnetic head assembly.

4,370,802

METHOD OF MAKING A THIN FILM MAGNETIC HEAD ASSEMBLY WITH MULTICONDUCTIVE CONNECTING ELEMENTS

Sanford Platter, Boulder, Colo., and Pierre Shelley, Santa Barbara, Calif., assignors to Applied Magnetics Corporation, Goleta, Calif.

Filed Aug. 25, 1980, Ser. No. 181,089

Int. Cl.³ G11B *5/42*

U.S. Cl. 29—603 11 Claims

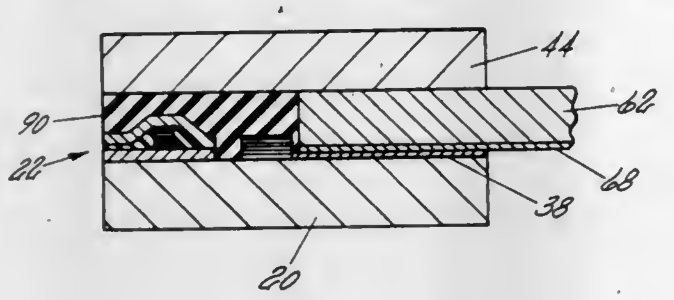

1. A method of making a thin film magnetic head assembly having a substrate, superstrate and thin film magnetic transducer mounted therebetween wherein the thin film magnetic transducer includes a transducing portion located exterior to adjacent edges of the substrate and superstrate and with conductive leads located interior to and extending between the substrate and superstrate comprising the steps of

mounting on a selected surface of a substrate a thin film magnetic transducer with the transducing portion thereof located adjacent one edge of said substrate which intersects with said selected surface;

positioning a preformed planar conductive connecting member having a thickness at least equal to that of the thin film magnetic transducer and formed of an elongated support section and a plurality of spaced, aligned connecting elements extending substantially perpendicular from the elongated support section wherein the connecting elements include a relatively thin diffusable conductive metal coating located on one side thereof with said one side of the connecting elements having said diffusable conductive metal coating thereon in intimate contact with the conductive leads such that a portion of said connecting elements together with the elongated support section of the planar conductive connecting member extend passed an edge of a substrate other than the one edge adjacent the transducing portion of said thin film magnetic transducer;

placing a superstrate in alignment with the substrate, thin film magnetic transducer and planar conductive connecting member such that the one edge of the superstrate is located adjacent the transducing portion of the thin film magnetic transducer and the one edge of the substrate in intimate engagement with the planar conductive connecting member to form a sub-assembly thereof having a predetermined space between the surface of the superstrate and the selected surface of the substrate, the dimension of the predetermined space being equal to the sum of the thickness of one of the conductive leads, the planar conductive connecting member and the thickness of the diffusable conductive metal coating thereon;

placing a quantity of insulating bonding material adjacent the spaced opposed edges and in the vicinity of the transducing portion of the thin film magnetic transducer, said insulating bonding material being selected of a material which is electrically and magnetically compatible with the thin film magnetic transducer and which has a melting point temperature below a thermal stress temperature at which at least one of the electrical characteristics and the magnetic characteristics of the thin film magnetic transducer are permanently distorted;

controllably heating the sub-assembly in a preselected atmosphere which inhibits oxidation and corrosion of the sub-assembly components at a heating rate which permits the thermal stresses of the sub-assembly to be maintained at a level to avoid damage to the sub-assembly during heating thereof up to a bonding temperature located in a bonding temperature range between the melting point temperature of the insulating bonding material and below the thermal stress temperature;

during the controllably heating, urging the superstrate and the substrate of the sub-assembly together with a clamping force to form a compression boundary between the surface of the connecting elements having the diffusable metal coating layer in intimate contact with the conductive leads enabling the diffusable conductive metal coating to diffuse into both the conductive leads and connecting elements to form a diffused electrical connection therebetween; and

maintaining the heated and clamped sub-assembly at a bonding temperature within the bonding temperature range for a time period sufficient to enable the insulating bonding material to substantially fill the predetermined space between the substrate and superstrate by capillary action to encapsulate and bond said thin film magnetic transducer, connecting elements and the conductive leads having the diffused electrical connection therebetween into a thin film magnetic head assembly.

4,370,803

METHOD FOR ENVELOPING THE PLATES OF AN AUTOMOTIVE STORAGE BATTERY WITH SEPARATOR MATERIAL

William J. Eberle, Reading, Pa., assignor to General Battery Corporation, Reading, Pa.

Continuation of Ser. No. 59,258, Jul. 20, 1979, abandoned, which is a continuation of Ser. No. 868,049, Jan. 9, 1978, abandoned, which is a division of Ser. No. 771,569, Feb. 24, 1977, Pat. No. 4,080,732. This application Nov. 20, 1980, Ser. No. 208,756

Int. Cl.³ B23P *15/00, 19/04*

U.S. Cl. 29—623.4 9 Claims

1. A method for forming lead-acid storage battery separator envelopes from a continuous roll of separator material of the type having ribs thereon, said method comprising the steps of:

(a) withdrawing separator material from said roll;

(b) clamping said withdrawn separator material along the length thereof to crush and deform said separator material ribs and produce two creases therein across the width thereof, said creases being spaced from each other approximately the thickness of a pasted battery plate;

(c) releasing said cla..ping;

(d) introducing the edge of a plate narrower in width than said separator material into contact with said separator material at said crushed and deformed portion thereof between said spaced creases;

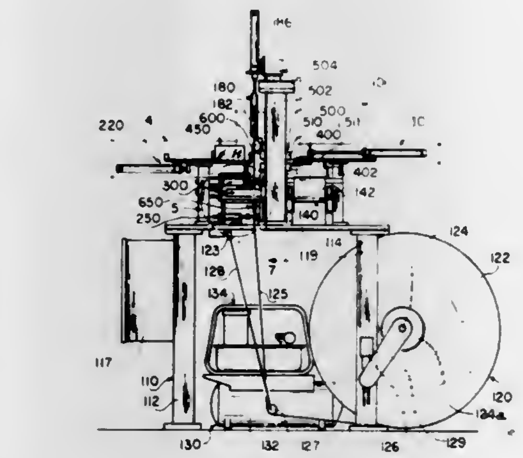

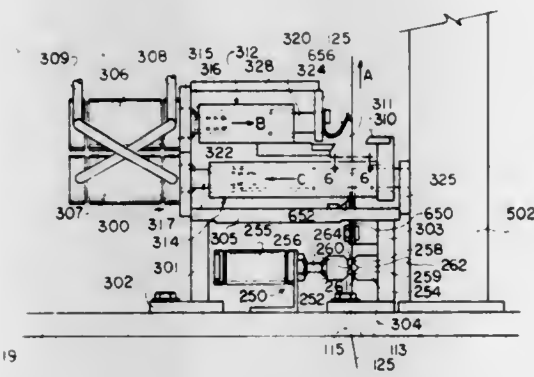

(e) folding said withdrawn separator material along the length of said plate, whereby said material overlaps the edges of said plate; and

(f) sealing said overlapped edges to each other.

4,370,804

ELECTRONIC COMPONENT INSERTING APPARATUS

Yoshihiko Misawa, Katano; Akira Kabeshita, Moriguchi; Kazuhiro Mori; Hiroshi Nakagawa, both of Katano, all of Japan, and Shigeru Araki, deceased, late of Katano, Japan (by Kaeko Araki, administratrix), assignors to Matsushita Electric Industrial Co., Ltd., Kadoma, Japan

Filed Sep. 3, 1980, Ser. No. 183,839

Claims priority, application Japan, Sep. 6, 1979, 54-114500

Int. Cl.³ B23P *23/00*

U.S. Cl. 29—741 4 Claims

1. An electronic component inserting apparatus comprising:

means for placing a circuit board into a predetermined position;

an insertion head for carrying a component to be placed on the circuit board;

an engaging shaft on which said insertion head is carried and having a ball receiving recess therein;

a machine body having a stationary bushing means therein in which said engaging shaft is slidably mounted for movement in the direction of the axis of said engaging shaft toward and away from a circuit board in said predetermined position, and in which said engaging shaft is rotatably mounted for movement around the axis of said engaging shaft;

a moving means connected to said engaging shaft for moving said engaging shaft reciprocally in the direction of the axis thereof toward and away from a circuit board;

a ball rotatably seated in said recess in said engaging shaft for rolling movement in said recess;

a plurality of cam groove means mounted between said engaging shaft and said bushing means and only one of which is engaged by said ball at any given time said cam groove means having a shape for producing rotational movement of said engaging shaft around the axis thereof during axial movement of said engaging shaft toward and away from a circuit board, each of said cam groove means having a shape for guiding said engaging shaft through an

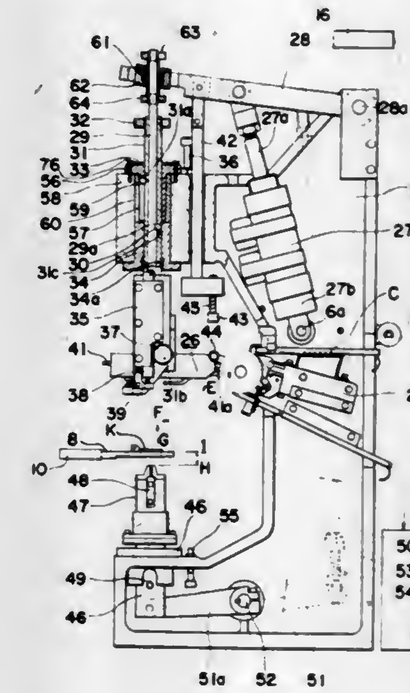

angle of rotation different from the angles of rotation of the other cam groove means, said cam groove means being interchangeable for changing the rotation angle of said engaging shaft.

4,370,805

CIRCUIT PACKAGE HANDLING APPARATUS

Wayne K. Pfaff, Irving, Tex., assignor to Plastronics Interconnections, Inc., Irving, Tex.

Filed Oct. 20, 1980, Ser. No. 198,543

Int. Cl.³ B23P *19/00;* **H05K** *3/30*

U.S. Cl. 29—741 22 Claims

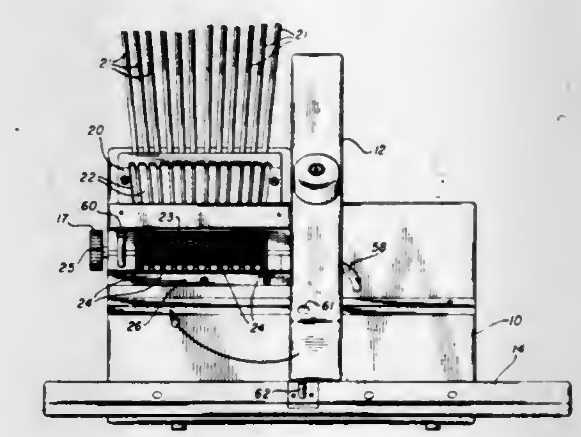

1. Apparatus for simultaneously loading a plurality of circuit packages in a plurality of receiving sockets comprising:

(a) means for receiving a plurality of circuit packages and directing said packages toward a plurality of loading stations;

(b) metering means for simultaneously transferring one circuit package from each of the receiving and directing means into a loading station wherein said circuit packages occupy the positions with respect to each other that they will occupy when positioned in their respective receiving sockets;

(c) rack means for simultaneously lifting said plurality of circuit packages from said loading stations;

(d) transfer means for moving said rack means from said

loading stations and aligning said circuit packages with said receiving sockets; and
(e) means for simultaneously inserting said plurality of circuit packages into said receiving sockets.

4,370,806
ELECTRICAL HARNESS FABRICATION APPARATUS
Jack F. Funcik, Downers Grove; Joseph C. Bennet, Lisle; Joseph T. Tubbs, Woodridge, and Thomas E. Schneider, Burbank, all of Ill., assignors to Molex Incorporated, Lisle, Ill.
Division of Ser. No. 12,715, Feb. 16, 1980, Pat. No. 4,235,015. This application Aug. 11, 1980, Ser. No. 177,108
Int. Cl.^{3} B23P *19/00*
U.S. Cl. 29—749 **4 Claims**

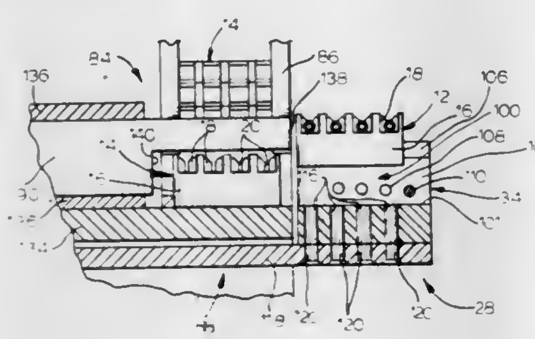

1. In a machine for making an electrical harness,
said harness comprising at least one connector with contacts loaded therein, each contact connected to a wire,
said machine including a first station whereat a first connector is initially positioned and a completed electrical harness is finally presented,
the improvement comprising:
a connector feed station adjacent to said first station whereat a second connector is positioned prior to being positioned at the first station;
a load and eject assembly associated between said connector feed station and said first station including a reciprocally mounted connector engaging push member having one portion thereof engaging the second connector at the connector feed station and having another portion thereof engaging the first connector of a completed electrical harness at the first station, said connector engaging push member being actuable to move in a direction from the connector feed station toward the first station so that the second connector at the connector feed station is moved to the first station while, at the same time, the completed electrical harness is ejected from the opposite end thereof; and
control means for actuating said load and eject assembly after a completed electrical harness is presented to the first station.

4,370,807
WATER-POWERED, ROTARY HEAD SHAVER
Charles R. O'Neill, 11 Hillside Ave., Roslyn Heights, N.Y. 11577
Continuation-in-part of Ser. No. 972,081, Dec. 21, 1978, abandoned. This application Nov. 26, 1979, Ser. No. 97,298
Int. Cl.^{3} B26B *19/34*
U.S. Cl. 30—41.5 **10 Claims**

3. A water-powered, rotary head shaver, comprising:
a housing including a hollow generally cylindrical shaving head portion defining an interior chamber which is divided into a front chamber segment and an axially-spaced rear chamber segment separated by an intermediate wall, said shaving head portion having at least one opening communicating with said front chamber segment and at least one water outlet port communicating with said rear chamber segment, said housing also having an elongated, generally cylindrical hollow handle portion securely directed adjacent to said shaving head portion which handle portion defines an interior channel which communicates at one end with said rear chamber segment and which handle portion has a water inlet port formed therein which opens into the other end of said interior channel, said handle portion having an axis which is disposed generally normally to the axis of said shaving head portion;
a rotary head grill mounted within said opening of said shaving head portion and disposed generally normally to the longitudinal axis of said shaving head portion;
a drive shaft rotatably mounted within said interior chamber of said shaving head portion and disposed generally parallel to the longitudinal axis of said shaving head portion;

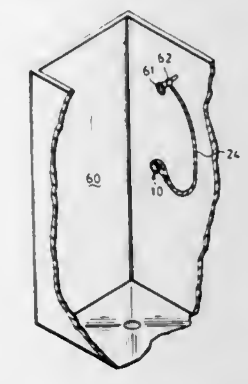

an impeller having a plurality of vanes mounted on said shaft and disposed in said rear chamber segment;
a rotary cutting head coupled to said shaft for rotation therewith and disposed in said front chamber segment adjacent to said rotary head grill for cooperative shearing engagement therewith upon rotation thereof, said rotation of said cutting head being effected upon the introduction of water under pressure through said water inlet port of said handle portion and said channel of said handle portion, following which it impinges upon the vanes of said impeller causing rotation thereof and said drive shaft and, in turn, said cutting head.

4,370,808
CUTTING TOOL WITH WEDGE SHAPED CUTTING BLADE TO REDUCE FRICTION
Walter J. Maytham, Los Altos, Calif., assignor to Speed Systems, Inc., Waukesha, Wis.
Filed Sep. 29, 1980, Ser. No. 192,072
Int. Cl.^{3} H02G *1/12*
U.S. Cl. 30—353 **6 Claims**

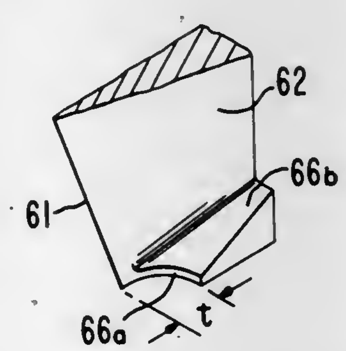

1. A cutting blade for use in stripping insulation from a cable made up of conductive strands of material, said cutting blade having a front face, a rear face, a cutting edge formed at the intersection of said front face and said rear face an end and a wedge-shaped block of material formed at said end such that the wedge-shaped block of material extends at right angles from said front face, said wedge having a blunt face facing in the same direction as said cutting edge said cutting edge being adapted to cut a portion of the insulation in a helix around the axis of said cable when said blade is rotated about said cable but to leave uncut a small portion of insulation adjacent said conductive strands, said wedge being adapted to lift the uncut insulation beneath the cut insulation from said cable.

4,370,809
POWER CHAIN SAW
Hiroshi Takahashi, Fussa, and Masatoshi Satoh, Tokyo, both of Japan, assignors to Kioritz Corporation, Tokyo, Japan
Filed Mar. 24, 1981, Ser. No. 247,210
Claims priority, application Japan, Mar. 26, 1980, 55-39841[U]
Int. Cl.^{3} B27B *17/00*
U.S. Cl. 30—381 **6 Claims**

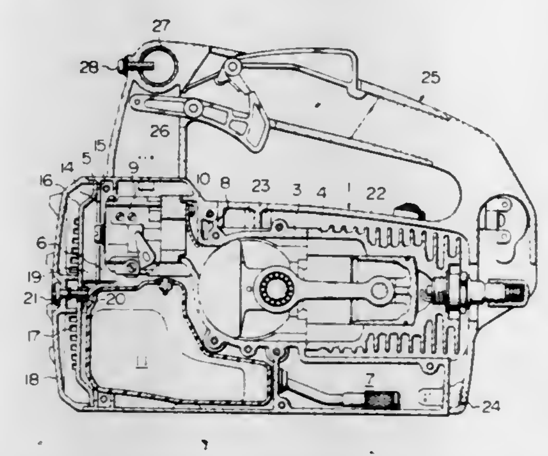

1. A power chain saw comprising a power unit including a crank-case, a cylinder block, a forwardly extending housing formed integrally with said crank-case and having a space defined thereof, a carburetor disposed in the space and connected to said crank-case in communication with its interior, and a main handle positioned on the power unit on its upper side and extending longitudinally between the rear end and the forward upper portion of the power unit.

4,370,810
PORTABLE MOTOR CHAIN SAW
Volker Schurr, Schwieberdingen; Hans Nickel, Burgstetten; Klaus Höppner, Marbach; Gisbert Köhler, Fellbach; Hermann Weiss, Erdmannhausen, and Dieter Wieland, Neckarrems, all of Fed. Rep. of Germany, assignors to Andreas Stihl, Waiblingen, Fed. Rep. of Germany
Filed May 29, 1980, Ser. No. 154,533
Claims priority, application Fed. Rep. of Germany, Jun. 2, 1979, 2922573
Int. Cl.^{3} B27B *17/02*
U.S. Cl. 30—382 **19 Claims**

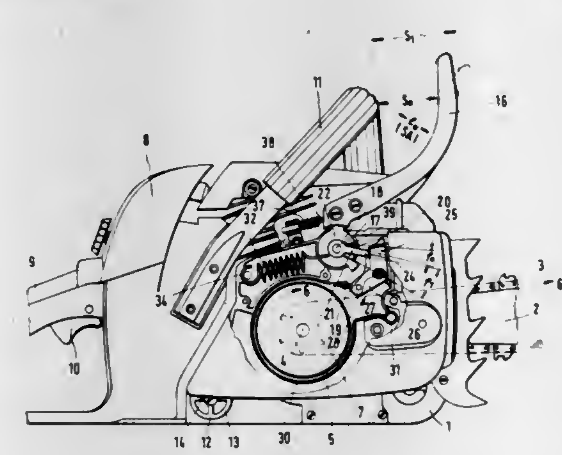

1. A portable motor chain saw, comprising in combination:
a housing;
a braking device, arranged and associated with said housing, for stopping the saw chain during recoil;
a locking mechanism arranged and associated with said braking device; and
a release for said braking device arranged and associated with said housing, at least one holding means for holding said release in its ready position, said release being raised in brake-off position so as to have a spacing from said locking mechanism though able to move along a predetermined acceleration path toward the saw chain in the event of recoil and operatively engageable with said locking mechanism in the release position of said release, said release being an inertial mass which is freely movable along an acceleration path and which is so strongly accelerated during recoil of the motor chain saw that stored kinetic energy of said inertial mass in the release position is greater than the resistance force of said locking mechanism so that such kinetic energy is sufficient to disengage said locking mechanism automatically to overcome the resistance force without delay to assure especially high certainty during release of said braking device without manual actuation thereof being required and independently of angle of incidence of any force encountered therewith.

4,370,811
APPARATUS FOR MARKING PRESELECTED MEASUREMENTS
Dennis R. Triggs, 348 E. Fernwood St., Morton, Ill. 61550, and Howard W. Coulter, 12 Oakcrest Dr., Pekin, Ill. 61554
Filed Feb. 9, 1981, Ser. No. 233,010
The portion of the term of this patent subsequent to Nov. 18, 1997, has been disclaimed.
Int. Cl.^{3} B43L *13/00*
U.S. Cl. 33—32 R **10 Claims**

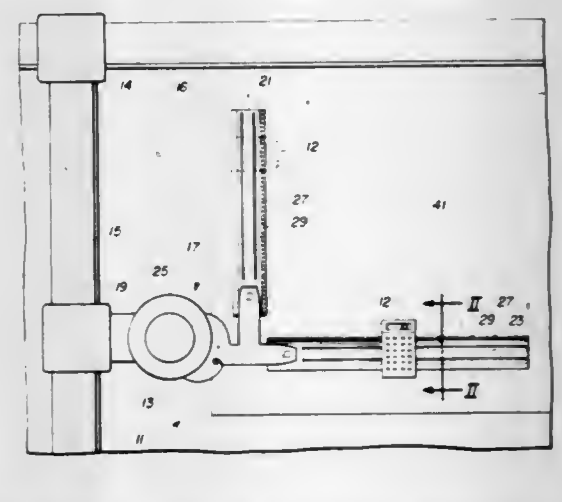

1. Apparatus for marking preselected measurements on an object, comprising:
a housing,
a source of electrical energy operably connected with said housing;
means for receiving and storing preselected data, said data means being a microcomputer operably connected with said housing and connected to said source of electrical energy;
means for engaging and guiding movement of said housing relative to said object in a substantially straight line, said guiding means having calibrations at equally spaced intervals;
means in said housing, connected to said energy source for electrically sensing said calibrations in response to said housing being moved relative to said calibrations and for registering said sensing with said preselected data; and
means in said housing connected with said energy source for marking said object in response to said registered sensing of said calibrations, said marking means being electrically energized for urging a color-impregnated marking medium into repeated momentary contact with said object in a spaced marking pattern corresponding to said preselected stored data.

4,370,812
GAUGING HEAD FOR CHECKING LINEAR DIMENSIONS OF MECHANICAL PIECES
Mario Possati, Bologna, Italy, assignor to Finike Italiana Marposs S.p.A., S. Marino di Bentivoglio, Italy
Filed Oct. 27, 1980, Ser. No. 201,223
Claims priority, application Italy, Oct. 29, 1979, 3527 A/79
Int. Cl.³ G01B *7/12*
U.S. Cl. 33—169 R **13 Claims**

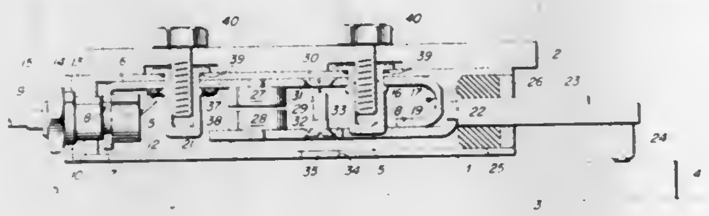

1. A gauging head for checking linear dimensions of mechanical pieces, comprising: an outer casing having lateral external faces that are substantially plane and parallel to a longitudinal geometrical axis of the casing; a movable gauging arm protruding from an end of the casing; a feeler fixed to the gauging arm to contact the surface of the piece to be checked, the feeler being movable along a direction that is substantially perpendicular to said geometrical axis; arm supporting means fixed to the casing; transducer means adapted to provide a signal depending on the position of the feeler; and sealing means for the closure of the casing, wherein said casing basically consists of a single seamless drawn tubular element open at its ends and with four lateral walls having substantially a constant thickness, said supporting means being fixed substantially to a single internal face of the tubular element and including a first longitudinal element fixed to one of said walls of the tubular element, a second element, substantially longitudinal, arranged within the tubular element and carrying the gauging arm and the feeler, and a third connection element connecting the first and the second element, the third element having a section that is resiliently flexible to allow the moving of the second element about said section, and wherein the first and the third connection elements are parts of a single member of bent sheet steel, said sealing means being adapted to seal the ends of the tubular element.

4,370,813
AUTOMATIC SELF-LEVELING INSTRUMENT MOUNT
Edward W. Burniski, 152 Sharp St., Alden Station, Nanticoke, Pa. 18634
Continuation-in-part of Ser. No. 45,692, Jun. 5, 1979, Pat. No. 4,265,027. This application Jan. 21, 1981, Ser. No. 226,643
Int. Cl.³ G01C *5/02*
U.S. Cl. 33—291 **7 Claims**

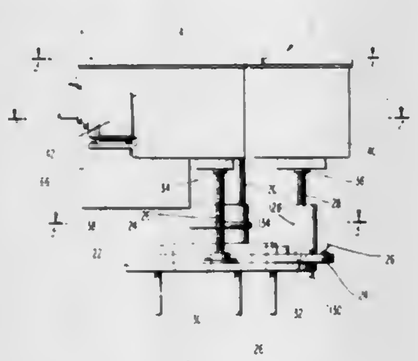

1. A self-levelling mount, comprising:
a table having a surface to be oriented parallel to a reference plane;
a stationary frame member;
a first, fixed length support arm pivotally connected between said table and said frame member;
second and third, variable length support arms connected between said table and said frame member, said second and third variable length support arms being pivotally connected and retained to said frame member by first pivot members, said variable length support arms being coupled to said table through second pivot members;
said first, second and third arms being oriented in a triangular array; and
means for controlling the lengths of said second and third arms to orient said table relative to the reference plane.

4,370,814
WELL TOOL FOR DETECTING WELL BORE DEVIATION IN DRILL STRING
William T. Carpenter, Jr., #3 Colony East, Houston, Tex. 77069
Filed Jul. 18, 1980, Ser. No. 170,048
Int. Cl.³ E21B *47/22*
U.S. Cl. 33—307 **11 Claims**

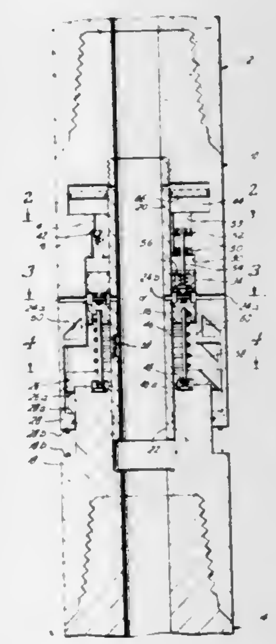

1. Well tool for detecting well bore deviation, comprising:
(a) a tool adapted to be connected between adjacent components of a drill string, including a longitudinal opening through which drilling fluid can be circulated;
(b) at least one vent hole in the tool wall for communicating the longitudinal opening with the space outside the tool through which drilling fluid is circulated back to the surface;
(c) blocking means for selectively blocking and unblocking the vent hole;
(d) deviation measuring means for measuring the angle the tool has deviated from vertical;
(e) timing and moving means operatively connecting the deviation measuring means with the blocking means for moving the blocking means and unblocking the vent at a time interval after weight is placed on a bit, the time interval being determined by the amount of deviation measured by the deviation measuring means, the unblocking of the vent causing a pressure drop in the drilling fluid in the tool the timing of which indicates the amount of deviation.

4,370,815
NAVIGATION INSTRUMENT
James R. Younkin, Springdale, Ark., assignor to Edo-Aire Mitchell, Mineral Wells, Tex.
Filed Mar. 23, 1981, Ser. No. 246,309
Int. Cl.³ G01C *19/34*
U.S. Cl. 33—318 **17 Claims**

1. An aircraft instrument for generating navigation information comprising:
a first element;

means for coupling said first element to a gyro to be driven thereby;
first transducer means for generating a signal representative of the position of said first element relative to a reference;
a second element;
means for coupling said second element to said first element for co-movement therewith, said means for coupling including means for de-coupling and relatively rotating said second element with reference to said first element;

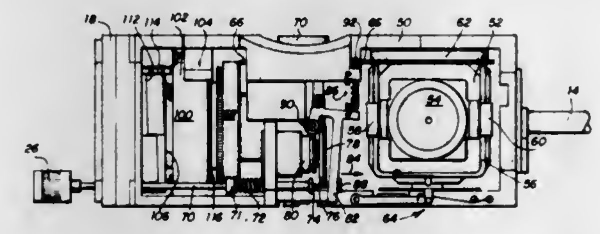

second transducer means for generating a signal representative of the position of said second element relative to said reference; and
means for generating a signal varying with the differential between said first and second transducer means signals and varying with the relative position of said first and second elements.

4,370,816
CLOSED-CIRCUIT CONDENSATION PURIFIER FOR GASEOUS FLOWS CONTAINING SOLVENTS AND MOISTURE
Alessio Zambelli, Treviso, Italy, assignor to VE.DA. S.r.l, Italy
Filed Oct. 27, 1980, Ser. No. 201,379
Claims priority, application Italy, Jan. 3, 1980, 82501 A/80
Int. Cl.³ F26B *11/04, 21/08*
U.S. Cl. 34—76 **10 Claims**

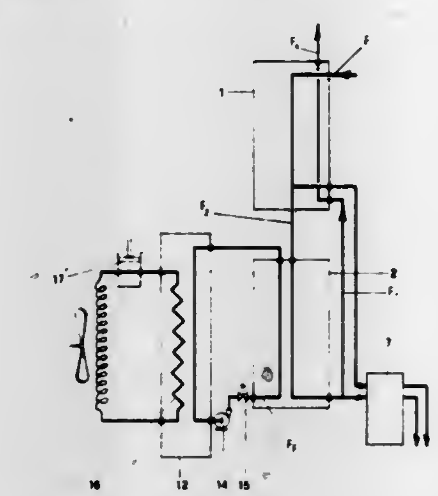

1. A closed circuit purification system for gaseous flows containing water and solvent vapors coming from a primary machine, comprising: a gas/gas heat exchanger receiving the gaseous flow from the primary machine for cooling it to such a temperature that substantially all the water vapor therein is converted to liquid, a gas/liquid heat exchanger receiving the gaseous and liquid flow coming from the gas/gas heat exchanger for freezing the water and condensing the solvent vapor, and a cooling circuit operatively connected to the gas/liquid heat exchanger and further cooling the gaseous flow therein, whereby the purified gaseous flow leaving the gas/liquid heat exchanger is returned into the gas/gas heat exchanger for cooling therein the incoming gaseous flow from the primary machine and being warmed itself.

4,370,817
ELEVATING BOOT
Karl S. Ratanangsu, 7752 Bellaire Ave., North Hollywood, Calif. 91605
Filed Feb. 13, 1981, Ser. No. 234,308
Int. Cl.³ A43B *7/16*
U.S. Cl. 36—81 **3 Claims**

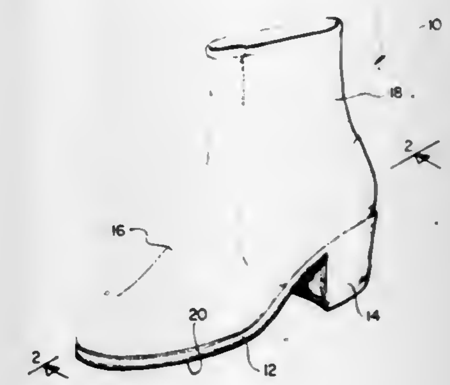

1. An elevating boot comprising:
a sole having a fore end and an aft end and a top surface and a first bottom surface;
a heel secured to said first bottom surface of said sole at said aft end, said heel having a second bottom surface, said first and second bottom surfaces to be substantially on the same plane;
a covering attached to said sole encasing said top surface of said sole, said covering being adapted to enclose the wearer's foot forming an enclosing chamber when positioned against said top surface of said sole;
a tubualr extension attached to said covering, said tubular extension being open ended and adapted to be located about the ankle of the wearer, the forward most section of said tubular extension to be in tight contact with the ankle of the wearer to prevent forward motion of the wearer's foot during walking;
a first insert mounted on said aft end of said sole and encased by said covering, said first insert having an upper inclining surface, said upper inclining surface to extend from directly adjacent said top surface of said sole to a spaced distance above said top surface at said aft end;
said enclosing chamber at said fore end including a second insert which is to be located forward of the wearer's foot, said second insert makes it appear that the size of the foot is larger to be in proportion to the appearance of the appearance of the increased height of the wearer due to the combination of the height of the heel and said first insert; and
a connecting section connected between said first and second inserts.

4,370,818
PROTECTIVE FOOTWEAR
Arthur Simoglou, 2014 Plant Ave., Redondo Beach, Calif. 90278
Filed Dec. 15, 1980, Ser. No. 216,690
Int. Cl.³ A43B *3/24, 23/26*
U.S. Cl. 36—100 **13 Claims**

1. Protective footwear comprising:
a shoe portion having an upper, a sole and a foot-receiving opening;
said foot-receiving opening including an elongate U-shaped opening forward of said foot-receiving opening adapted for permitting easy entry of a foot into said shoe portion;
a foot-protecting insert portion effective to encase a foot in a resilient protective layer;
said shoe portion being adapted for receiving a foot encased in said insert portion;
first fastening means adjacent a portion of said foot-receiving opening; and
second fastening means complementary to said first fastening

means and effective for removable attachment of said insert portion in said shoe portion;
said second fastening means including a collar on said insert

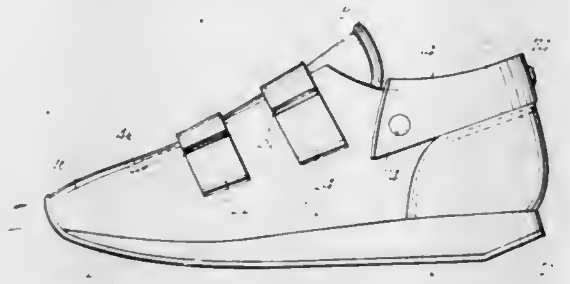

portion; said collar being foldable over a perimeter of said foot receiving opening to contact an outside surface of said upper and being effective to bring said first and second fastening means into interengageable positions.

4,370,819
APPARATUS FOR DEPOSITING AND SPREADING BALLAST
Robert E. Ingram, 726 Okuma Dr., Chester, Va. 23831
Filed Mar. 24, 1981, Ser. No. 247,213
Int. Cl.³ E02F *5/22*
U.S. Cl. 37—104 **4 Claims**

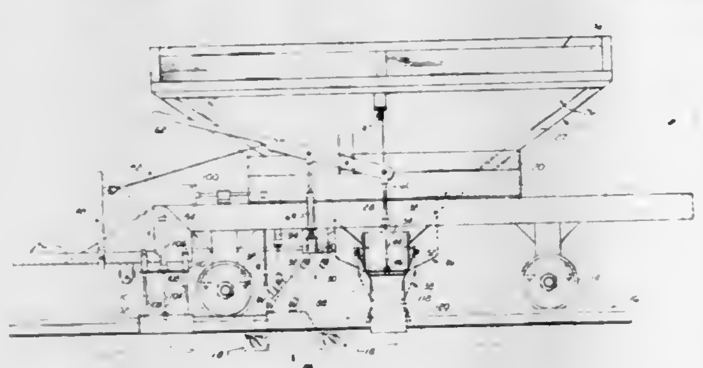

1. An apparatus for depositing and spreading ballast between and exteriorly of railroad rails and cross ties which comprises:
a. a frame mounted on wheels with said wheels engageable with said railroad rails,
b. hopper means supported by said frame,
(1) said hopper means having an open top and an open bottom and being adapted to receive said ballast,
(2) said hopper means having laterally extending chute means in fluid communication therewith with said chute means including a fixed chute means with inlet means positioned beneath the open bottom of said hopper means and laterally extending hollow portions extending in opposite directions toward a respective one of said railroad rails and a pair of movable chute means one of which is pivotally secured adjacent the ends of said hollow leg portions,
c. first door means located beneath said hopper means to control the deposit of ballast between said rails,
(1) said first door means being mounted in a horizontal plane and being extendable through slot means provided in said fixed chute means,
d. second door means to control the deposit of ballast exteriorly of said rails,
(1) said second door means being mounted for vertical movement within said laterally extending chute means at the juncture between said fixed chute means and said pair of movable chute means,
e. first blade means resiliently mounted beneath said frame engageable with ballast deposited between said rails,
f. and second blade means resiliently mounted beneath said frame engageable with ballast deposited exteriorly of said rails on the heads of the cross ties.

4,370,820
SELECTIVELY INTERCONNECTABLE INFORMATION CARD HOLDER ARRANGEMENT
Pierre Y. Tschanz, 10, rue Emile-Yung, CH-1205 Geneva
Continuation-in-part of Ser. No. 934,490, Aug. 17, 1978, abandoned. This application Feb. 19, 1980, Ser. No. 122,043
Claims priority, application Switzerland, Aug. 18, 1977, 10153/77
Int. Cl.³ B42F *17/00*
U.S. Cl. 40—388 **8 Claims**

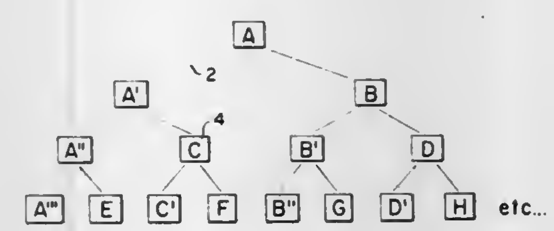

1. A device for the detachable arrangement of information carriers (6) whose information is an element of an ordered thought, or organization diagram in an order of alternatives and subalternatives,
wherein each information carrier (6) comprises an essentially rectangular card-like element,
and comprising
a double-wall (16*f*, 16*r*) connecting card-holder element (16) having
two lateral pocket-like portions (42, 44),
a central cut-out or opening (34) located between the lateral pocket-like portions, the dimension of the two lateral portions and the central cut-out together matching approximately the shape and size of the essentially rectangular card-like information carrier (6),
a central pocket-like portion (40) of approximately the same size as the central opening or cut-out (34) and projecting in alignment with the central opening, to permit fitting a pocket-like portion (40') of a further similar, adjacently located connecting card holder element positioned in the plane of the said connecting card holder element (16) into the central opening (34) thereof and permit insertion of the card-like information carrier element (6) through the lateral pocket-like portions (42, 44) of said connecting card holder element and the central pocket-like projecting portion (40') of the further adjacently located connected card holder element;
said information carrier element (6) simultaneously providing the information carried thereon as well as forming the connection between two adjacent connecting card holder elements located in the same plane;
and wherein the connecting card holder element further comprises three side pocket portions (50, 52, 54) located in alignment along the narrow side of the connecting card holder element,
and an elongated flexible strip 6' insertable simutaneously through the two outer side pocket-like portions (54, 50) of said connecting card holder element and through the inner pocket-like portion (54, 50) of an additional, similar superimposed connecting card holder element
said elongated strip (6') thus producing a connection between two superimposed connecting card holder elements.

4,370,821
ROTARY MAGAZINE ASSEMBLY FOR HOLDING INFORMATION BEARING CARDS
Falk J. Eichner, Coburg, Fed. Rep. of Germany, assignor to Eichner Organization KG, Coburg, Fed. Rep. of Germany
Filed Apr. 22, 1981, Ser. No. 256,654
Claims priority, application Fed. Rep. of Germany, Apr. 26, 1980, 3016190
Int. Cl.³ G09F *11/02*
U.S. Cl. 40—497 **2 Claims**

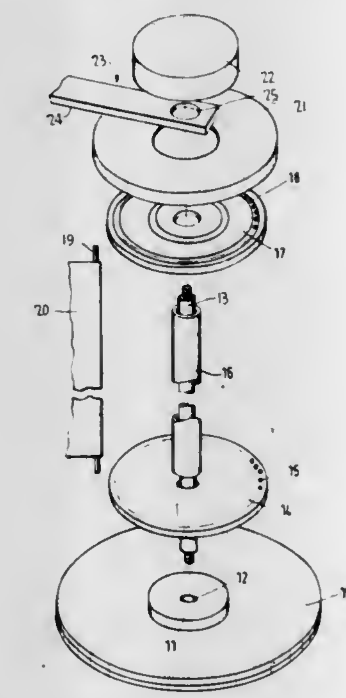

1. A rotary magazine assembly for holding information bearing cards and the like having support pins attached along one of the sides of the cards, comprising, a vertical axle having a support base, a pair of spaced plates rotatably mounted on said axle, an upper disc having a central aperture overlying an upper one of said plates, said plates each having opposed openings therein, opposite ends of said support pins pivotally engaging said opposed openings to permit pivotal movement and separation of the cards about the axes of said pins, said plates and said pins, together with the cards, thereby being rotatable about the central axis of said axle, a device comprising a horizontally disposed support arm mounted on said axle above said disc for rotation about said central axis, said device further comprising a vertically disposed guide pin overlying the cards and extending through an opening in said arm for vertical sliding movement, a stop element attached to one end of said pin and being spaced from said arm while extending in one position under gravity into a selected space between a pair of the cards when separated, and said device further comprising a finger gripping element attached to an opposite end of said pin for maintaining said stop element in said one position, whereby said device maintains the pair of cards separated and arrests the rotary movement about said central axis when it is desired to retrieve information therefrom with said stop element in said one position, said stop element being moved into a second raised position upon elevation of said finger gripping element to permit the cards to again be rotated about said central axis.

4,370,822
CONVERTIBLE FIREARM-AIRGUN
Villarosal A. Rabino, 28 Frankfort St., Daly City, Calif. 94104
Filed Jun. 12, 1980, Ser. No. 158,968
Int. Cl.³ F41C *27/00*
U.S. Cl. 42—1 R **23 Claims**

1. A convertible firearm-airgun comprising:
a barrel having a muzzle end and a chamber end and defining a bore therethrough between said muzzle end and said chamber end;
a bolt housing having a bolt cavity therein;
means for mounting said bolt housing to the chamber end of said barrel with said bolt cavity aligned with said bore;
a first chamber device defining a first chamber, said first chamber configured for chambering a cartridge therein, said first chamber device including a firing pin;
a second chamber device defining a second chamber, said second chamber configured for chambering a compressed-gas projectile therein;
means for selectively mounting either said first or said second chamber devices adjacent the bore at the chamber end of the barrel;

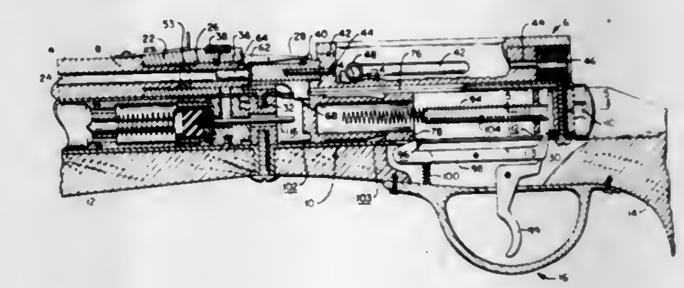

a first bolt assembly configured to be housed within said bolt cavity and adapted to movably engage the head of a cartridge chambered within said first chamber;
a second bolt assembly configured to be housed within said bolt cavity and adapted to movably engage an end of said second chamber;
a compressed gas chamber;
means for selectively fluidly connecting said compressed gas chamber and said second chamber when said second chamber device is mounted adjacent said bore; and
means for actuating either said firing pin when said first bolt assembly is mounted within said bolt cavity or said selective fluid connecting means when said second bolt assembly is mounted within said bolt cavity.

4,370,823
SNAKE TRAP
Albert B. Moorhead, P.O. Box 413, Conroe, Tex. 77301
Filed Mar. 10, 1980, Ser. No. 128,399
Int. Cl.³ A01K *69/02, 71/00, 74/00*
U.S. Cl. 43—7 **7 Claims**

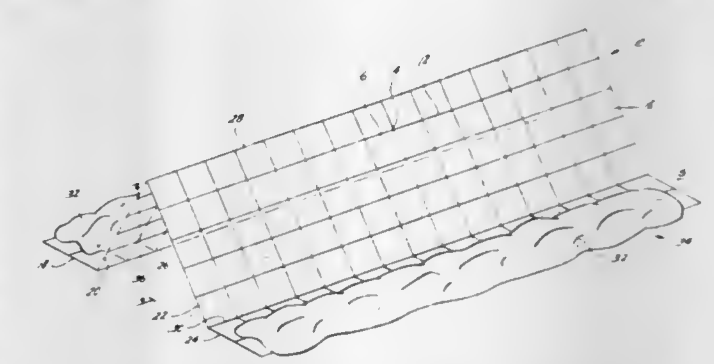

1. A device for the trapping of snakes comprising:
a sheet of unitary netting having at least four areas of netting;
said netting formed with interstices larger than the head of the snake to be trapped and smaller than the largest cross section of the snake to be trapped;
said netting areas being serially adjacently connected;
the first and last of said netting areas being non-adjacent and substantially co-planar to be placed substantially flat on the ground; and
the remaining of said at least four netting areas disposed at an angle to each serially adjacently connected netting area and forming at least one open space therebelow which is defined by the remaining of said at least four netting areas.

4,370,824
AERIAL DEVICE
Herbert Resnicow, 107 Weeks Rd., East Williston, L.I., N.Y. 11596
Filed Feb. 23, 1977, Ser. No. 771,279
The portion of the term of this patent subsequent to Oct. 18, 1996, has been disclaimed.
Int. Cl.² A63H *27/00;* **B64C** *3/12*
U.S. Cl. 46—74 D **1 Claim**

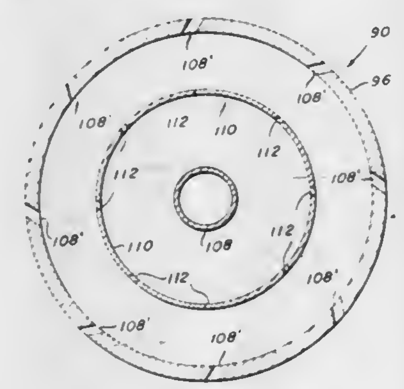

1. An aerial device designed to sail in the air when thrown in a manner such that rotation is imparted to the device, said device comprising, a disc having a top side and an underside, a downwardly extending skirt attached to the peripheral edge of said disc, air passageways in said skirt permitting air to be drawn into the underside of said disc upon rotation of said disc in flight, and at least one cylindrical wall extending downwardly from the underside of said disc to form an air cavity, said cylindrical wall having openings therein whereby the air is drawn in from said passageways in said skirt due to the rotation of said device and is forced inwardly through said openings toward the center of the underside of said device and then downwardly to enhance lift.

4,370,825
DEVICES OF THE TURNSTILE KIND FOR CONTROLLING PASSAGES REQUIRING AUTHORIZATION
Jean-Pierre Ulmann, Paris, France, assignor to Etablissements Georges Klein, France
Filed May 19, 1980, Ser. No. 151,457
Int. Cl.³ E06B *11/08*
U.S. Cl. 49—47 **2 Claims**

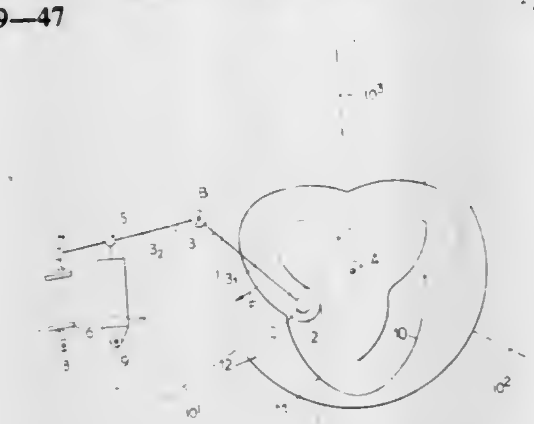

1. A turnstile for controlling the passage of people through a narrow opening by means of mechanical barriers adapted to obstruct at will this opening, comprising a rotary barriers-carrying member, and return means for automatically bringing the rotary member, after each passage causing retraction of a barrier, back towards a stable angular position in which a new barrier obstructs the passage, these return means comprising a first star-shaped cam angularly interlocked with the rotary member and a return roller, applied resiliently against this first cam, a second cam which delimits with the first cam a groove of constant width generally equal to the width of the said roller, thus adapted to jointingly encircle this roller, so that the directions of application of the roller against the respective cams are opposite, i.e. that the contact of the roller against the second cam opposes the loss of contact between the roller of the first cam, said roller being carried by a lever pivotally mounted about a lever axis parallel to the axes of the cams, said lever being associated, on the one hand, with resilient means for urging it angularly about said level axis in the direction corresponding to the application of the roller against the first cam, and on the other hand, with means for damping its angular movement.

4,370,826
SHUTTER SHIELDS (R), AUTO-MATED THERMAL SHUTTERS FOR GLASS AREAS
James D. Davidson, 67 Grantour Ct., Pontiac, Mich. 48055
Continuation of Ser. No. 94,910, Nov. 16, 1979, abandoned, which is a continuation of Ser. No. 77,000, Sep. 19, 1979, abandoned, Ser. No. 64,354, Aug. 7, 1979, abandoned, Ser. No. 48,394, Jun. 14, 1979, Ser. No. 39,448, May 16, 1979, abandoned, Ser. No. 828,437, Aug. 29, 1977, abandoned, Ser. No. 39,449, May 16, 1979, Pat. No. 4,267,666, Ser. No. 912,186, Jun. 5, 1978, abandoned, and Ser. No. 776,448, Mar. 10, 1977, abandoned. This application Jan. 23, 1980, Ser. No. 114,662
Int. Cl.³ E05B *65/04*
U.S. Cl. 49—63 **7 Claims**

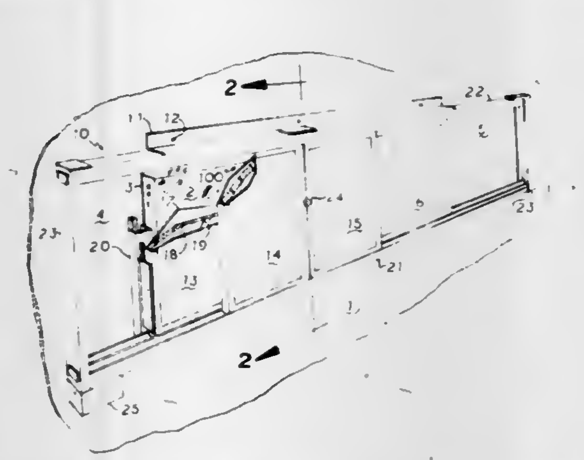

1. An improved building structure with upright walls having a glass area means commonly called a window or glass sliding door installed therein, said glass area means including a frame and a glass panel means mounted in said frame, in combination with an insulated shutter shield device having upper and lower track means spaced inwardly of said glass area at least one height dimension of said glass area frame and attached to the internal wall structural framing of said building wall structure and parallel to the plane of said glass area means;

laminate insulative shutter shield means mounted in said track means for movement between positions adjacent to the side of said glass area means and in front thereof, to block off the entirety of said glass area means, low friction means for supporting said laminate insulative shutter shield means for movement on said track means,

said laminate insulative shutter shield means having rigidifying means and an insulative material layer mounted side by side, said insulative material having little resistance against breakage when forces are applied in the direction perpendicular to the plane thereof, said rigidifying means providing a rigidification of said insulative material against the effects caused by forces applied from the outside, and seal means for effecting a seal around the periphery of said glass area means and between said glass area means and said insulative shutter shield means, thereby defining a sealed chamber;

said improved insulative shutter shield device having a motorized means for traversing said insulative shutter shield means to an opened or closed mode,

wherein the improvement comprises:

said traversing means having a motorized, threaded drive shaft means maintained in a mode of rotatable precision alignment housed in said lower track means;

a drive slide block means having a shutter drive pin means installed therein, extending vertically at right angles to said drive slide block means, said drive slide block means is threadedly disposed in a non-rotatable mode on said threaded drive shaft means; and

at least one insulated shutter shield means is installed in said track means engaging said vertical extending shutter drive pin means; whereby

said motorized traversing means opens or closes said insulated shutter shield.

4,370,827
WEATHERTIGHT DOOR ASSEMBLY
Kozo Furuminato, Kurobe, Japan, assignor to Yoshida Kogyo K K, Tokyo, Japan
Filed Aug. 1, 1980, Ser. No. 174,713
Claims priority, application Japan, Aug. 10, 1979, 54-109457
Int. Cl.³ E06B *7/16*
U.S. Cl. 49—368 **4 Claims**

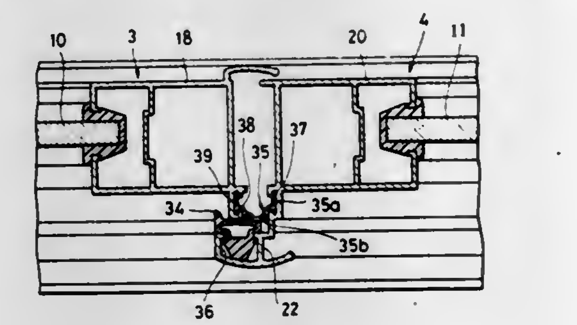

1. A weathertight door assembly comprising:

(a) an outer frame adapted to be mounted within an opening in a building wall, said outer frame including a header, a sill, and a pair of side jambs connected to said header and sill at their ends to define a door opening;

(b) a pair of doors pivotably supported on said pair of side jambs, respectively, for jointly closing said door opening, each of said doors including a panel and an inner frame extending along and embracing the periphery of said panel, said inner frame including a pair of upper and lower horizontal frame members and a pair of inner and outer vertical frame members, one of such two inner vertical frame members having a projection extending therealong for covering a gap between said inner vertical frame members when said doors are closed, said projection having a pair of cut-aways one at each vertical end;

(c) first sealing means supported on said outer frame along such door-opening-defining inside edges thereof for sealing gaps between said outer frame and the periphery of said pair of doors when the latter is closed, said first sealing means being permitted by said cut-aways of said projections to come into contact with the periphery of said pair of doors when the latter is closed; and

(d) a pair of coacting second and third sealing means on one of said doors for sealing a gap between said inner vertical frame members when said doors are closed, said second sealing means being supported on said projection of said one inner vertical frame member and coextending with the length of said projection, said third sealing means being supported on said one inner vertical frame member and coextending with the length thereof, said third sealing means, when said doors are closed, being sandwiched partly between said second sealing means and the other inner vertical frame member and partly between the latter and said first sealing means.

4,370,828
WINDOW FRAME ASSEMBLY
Carl F. Miro, 1805 Atoka Avenue, Youngstown, Ohio 44511
Division of Ser. No. 914,568, Jun. 12, 1978, Pat. No. 4,246,731, which is a continuation-in-part of Ser. No. 765,262, Feb. 3, 1977, abandoned. This application Oct. 14, 1980, Ser. No. 196,594
Int. Cl.³ E06B *3/38, 1/04*
U.S. Cl. 49—383 **12 Claims**

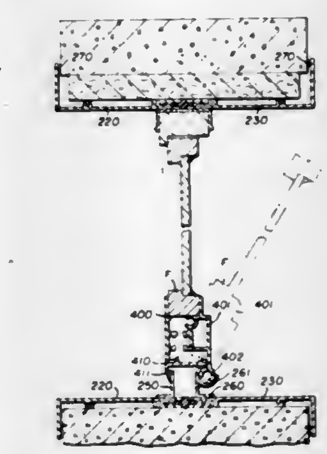

1. A frame assembly for reception of a window in a window opening formed in a wall, comprising:

(A) a pair of rigid frame sections each having
   (1) opposed top and bottom components and
   (2) opposed end components interconnecting said top and bottom components adjacent their ends to form a rectangular frame section;

(B) locking means carried by at least some of said components in opposed relationship for engagement with each other and interconnection of said frame sections;

(C) sealing means disposed on said top, bottom and end components of said frame sections;

(D) at least some of said sealing means being interconnected to said frame of the window by intermediate means;

(E) said top, bottom and opposed end components have elongate channels opening into facing edge surfaces thereof; and

(F) a non-heat conducting connector is provided for engagement within said channels.

4,370,829
SELF-ALIGNING VEHICLE DOOR HINGES
Robert J. Wagner, Milwaukee, Wis., assignor to Allis-Chalmers Corporation, Milwaukee, Wis.
Filed Oct. 3, 1980, Ser. No. 193,602
Int. Cl.³ E05D *7/08*
U.S. Cl. 49—388 **7 Claims**

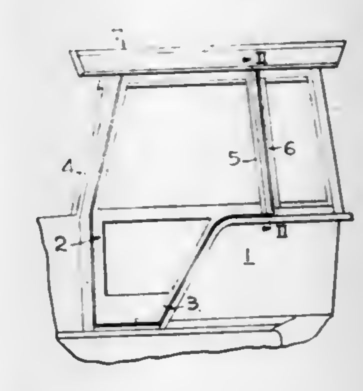

1. Self-aligning door hinges for a vehicle comprising, a door pillar, a spherical bushing defining a central opening, a socket mounted on said pillar receiving said spherical bushing for universal movement of said spherical bushing, a door, a shaft connected to said door and extending from said door for reception in said sperical bushing forming a hinge of universal movement between said door and said pillar, first sleeve means

mounted on said door pillar, means defining a door supporting surface on said first sleeve means, second sleeve means including a mating door carrying surface mounted on said door, a pin positioned in said first and second sleeve means when aligned thereby providing a hinge between said pillar and door and defining with the spherical bushing hinge the hinge axis on said door.

4,370,830
SLIDING WINDOW
Hans Schaefer, Cologne, and Wolfgang Budich, Troisdorf, both of Fed. Rep. of Germany, assignors to Dynamit Nobel Aktiengesellschaft, Troisdorf, Fed. Rep. of Germany
Filed Oct. 7, 1980, Ser. No. 194,815
Claims priority, application Fed. Rep. of Germany, Jun. 28, 1980, 3024555
Int. Cl.³ E05D *15/06*
U.S. Cl. 49—413 35 Claims

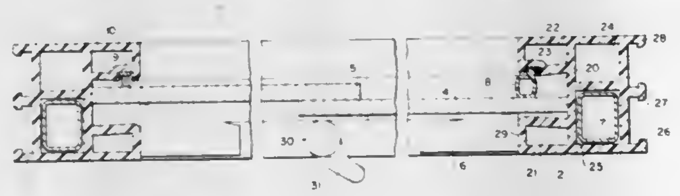

1. A sashless sliding window which includes a frame to be mounted in a wall of masonry, wood, or the like, the frame comprising a plurality of frame profile members joined at corners of the frame, and glass panes adapted to be inserted in the frame, means are provided in the frame for displacably guiding at least one of the glass panes in a horizontal direction, characterized in that each of the frame members is made of an extrudable synthetic resinous material and has a substantially U-shaped cross sectonal configuration with legs of the U-shape being formed by two projections, each of the two projections being fashioned as a hollow chamber, the guiding means includes an undercut mounting groove arranged at least in an upper and lower profile member of the frame between the two projections for accommodating the glass panes, a web means is provided for connecting the two projections to each other, the web means is formed by two juxtaposed additional hollow chambers, means are provided in one of the additional hollow chambers facing a weather side of the window for draining the undercut mounting groove, and in that the guiding means further includes a sliding rail means arranged at least in the undercut mounting groove of the lower profile member of the frame for facilitating a horizontal displacement of the at least one of the glass panes.

4,370,831
RF SHIELDED DOOR SEAL
William H. Hamilton, Seattle, Wash., assignor to The Boeing Company, Seattle, Wash.
Filed Nov. 28, 1980, Ser. No. 211,322
Int. Cl.³ E06B *7/16*; H05K *9/00*
U.S. Cl. 49—477 22 Claims

1. In a wall construction having a peripheral seal for a door;
a door frame on which the door is mounted to move from open and closed positions;
an opening through said frame for passage when the door is in the open position;
sealing means extending between and along opposing face portions of said door and frame to form a seal between the door and the frame when the door is closed, the door having peripheral edges transverse to said sealing means and to said opposing face portions of the door and frame;
the improvment comprising:
said sealing means having a first sidewall diaphragm movable toward and away from said door when the door is in the closed position to form and break a seal between said door and said sealing means, and a second sidewall diaphragm movable toward and away from said frame when the door is in the closed position to form and break a seal between said frame and said sealing means;
said peripheral edges on said door being transverse to said first sidewall diaphragm forming said seal between the door and sealing means;
operative means within said sealing means to move said first sidewall diaphragm to form the seal on the door and to

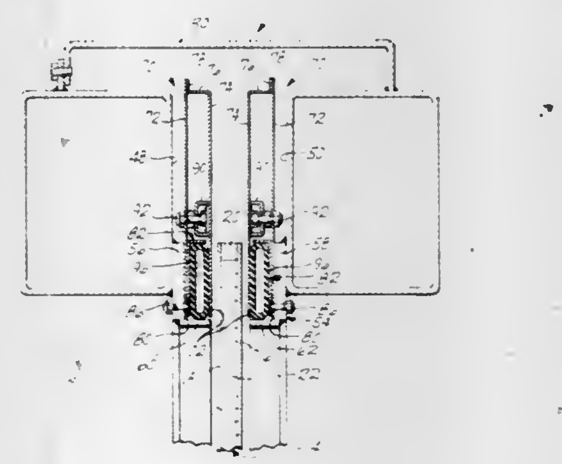

break the seal on the door, and to move the second sidewall diaphragm to form the seal on the frame and to break the seal on the frame, said operative means comprising a substantially continuous expandable tubular bladder; and
pulling means associated with said sealing means for holding said first sidewall in an unsealing position and for retracting first sidewall from a sealing position when said expandable bladder is unexpanded.

4,370,832
WEATHERSTRIP FOR VEHICLE CLOSURE
Shouichi Koike, Tokyo, Japan, assignor to Nissan Motor Co., Ltd., No. 2, Yokohama, Japan
Filed Jul. 23, 1981, Ser. No. 286,230
Claims priority, application Japan, Aug. 27, 1980, 55-118705
Int. Cl.³ E06B *7/16*
U.S. Cl. 49—488 6 Claims

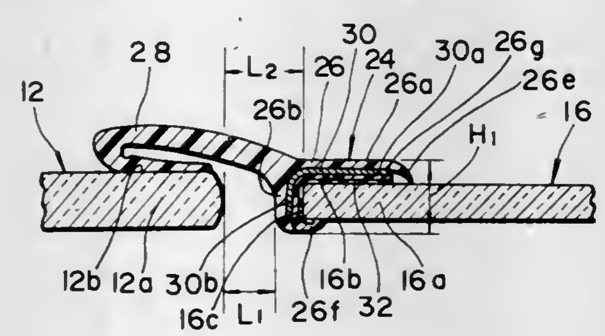

1. A weatherstrip for providing a seal between first and second movable window glass panels of an automotive vehicle, comprising:
a resilient base portion of a substantially L-shaped section having two legs adapted to engage at the interior surfaces thereof a marginal interior surface portion and a peripheral end surface portion of said first window glass panel, respectively;
a resilient lip portion integral with and extending from said base portion toward said second window glass panel and self-biased with its resilience toward said second window glass panel so that it is sealingly engageable with a marginal interior surface portion of said second window glass panel; and
a substantially rigid core member embedded in said base portion and being of a substantially L-shaped section

having two legs substantially parallel to the interior surfaces of said legs of said base portion, respectively;
said legs of said base portion being cemented at the interior surfaces thereof to the marginal interior surface portion and the peripheral end surface portion of said first window glass panel, respectively.

4,370,833
SEALING ARRANGEMENTS IN THE FORM OF STRIPS
Gerd Niemanns, Grefrath, Fed. Rep. of Germany, assignor to Draftex Development A.G., Zug, Switzerland
Filed Dec. 23, 1980, Ser. No. 219,580
Claims priority, application United Kingdom, Jan. 5, 1980, 8000343
Int. Cl.³ E06B *7/16*
U.S. Cl. 49—489 12 Claims

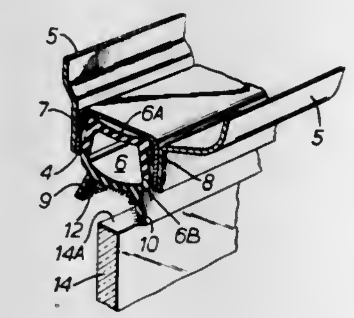

1. A sealing strip arrangement for sealing against a distal edge of a movable member, comprising,
a substantially rigid supporting channel,
a hollow tube of resilient and flexible material mounted within the supporting channel so as to fill, and having an external surface which is substantially flush with, the longitudinal mouth of the supporting channel,
and
two flexible and resilient leaves running along the tube's external surface which fills the longitudinal mouth of the supporting channel, the leaves being attached to the said surface of the tube at positions substantially inwardly of the distal edges of the side walls of the supporting channel and being adjacent and aligned with each other so as to define between them a longitudinally shaped open mouth for receiving the distal edge of the movable member, the movable member when it moves into the said mouth tending to flatten the tube thereby causing the leaves to press against the sides of the said member adjacent its distal edge while maintaining the tube in contact with the side walls of the supporting channel adjacent the latter's longitudinal mouth.

4,370,834
MACHINES FOR GRINDING TOOTHED CUTTING TOOLS
Robert Habib, 36,quai Gustave Ador, 1207 Geneva, Switzerland
Filed Nov. 12, 1980, Ser. No. 205,910
Claims priority, application Switzerland, Nov. 16, 1979, 10249/79
Int. Cl.³ B24B *49/00*
U.S. Cl. 51—165.72 8 Claims

1. A machine for grinding toothed cutting tools comprising: a sliding table for supporting a tool to be ground, a grinding wheel support head which is movable transversely with respect to the table and which is tiltable, a grinding wheel supported by said support head, and means for locating and positioning the table relative to the grinding wheel, said positioning means comprising an emitter capable of emitting a ray of energy and a receiver for receiving the ray of energy and for developing an output signal for controlling the movement of the table, and the emitter and receiver being mounted so that the emitted ray can be intercepted by a tooth of the cutting tool to be ground to change the receiver output signal to indicate

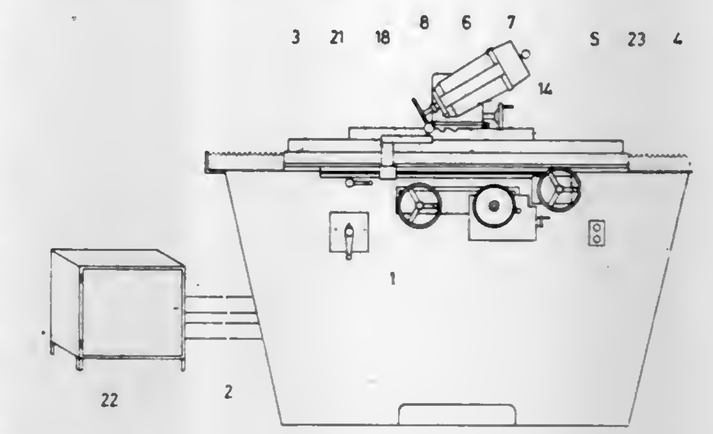

the position of the tool to be ground to enable control of the table position.

4,370,835
WORKING PRESSURE CONTROL MECHANISM
Christian von Schneidemesser; Paul G. Nowotka, and Gerhard Rüdel, all of Rendsburg, Fed. Rep. of Germany, assignors to Peter Wolters, Rendsburg, Fed. Rep. of Germany
Filed Dec. 18, 1980, Ser. No. 217,827
Claims priority, application Fed. Rep. of Germany, Dec. 18, 1979, 2950881
Int. Cl.³ B24B *49/10*
U.S. Cl. 51—165.77 1 Claim

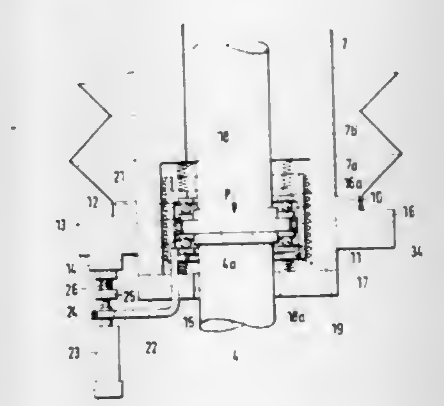

1. A working pressure control mechanism for lapping, honing, and grinding machines having a rotatably mounted shaft bearing the tool within an axially translatable housing such that the shaft is carried along by the housing in the direction of the tool advance, comprising
a spring means capable of axially translating the housing;
a signal producing means capable of producing a signal corresponding to the magnitude of axial displacement caused by the workpiece and connected to said spring means;
a mechanism advance control means capable of receiving a signal from said signal producing means, and advancing the housing to compensate for the degree of axial displacement; and
wherein the shaft is rotatably mounted in a first bushing which is parallel to the axis of the shaft; said first bushing being disposed inside the housing, which housing is a hollow piston rod; said first bushing having at least one region, defined by thin wall rings, along its length which is elastically deformable by the force applied to it due to the advancing motion of the hollow piston rod, and which region contains mounted therein at least one strain gauge strip whose electrical resistance varies with changes in its length; said strip being connected to the input of an electrical comparator which controls the advancing force of

the hollow piston rod and by it, through the shaft, the tool.

4,370,836
UNIVERSAL ABRASIVE CLEANING APPARATUS
Wayne B. Hockett, 1701 E. Sligh Ave., Tampa, Fla. 33610
Continuation-in-part of Ser. No. 13,376, Feb. 21, 1979, abandoned, which is a continuation-in-part of Ser. No. 746,493, Dec. 1, 1976, Pat. No. 4,139,970, which is a continuation-in-part of Ser. No. 614,191, Sep. 7, 1975, Pat. No. 4,027,433. This application Aug. 25, 1980, Ser. No. 180,804
Int. Cl.³ B24C *3/00*
U.S. Cl. 51—410 **5 Claims**

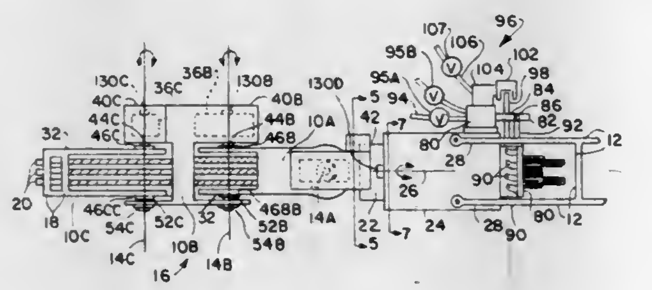

1. An apparatus for spraying a work surface with material under pressure from a remote control surface with material under pressure from a remote control source of material and pressure, comprising in combination:
- a base;
- a first arm having a channel disposed therein along the length of said first arm;
- a first means for rotatably mounting said first arm relative to said base enabling said first arm to rotate about a first axis of rotation;
- a second arm having a channel disposed therein along the length of said second arm;
- a second means for rotatably mounting said second arm relative to said first arm enabling said second arm to rotate about a second axis of rotation;
- a third means for rotatably mounting said first arm relative to said base about a third axis of rotation;
- said third axis of rotation being disposed substantially perpendicular to said first axis of rotation;
- said third means for rotatably mounting said first arm including a housing;
- said third means further including a drum rotatably mounted in said housing;
- said third means further including means for connecting said housing to said base;
- said third means further including means for imparting rotational movement to said drum; and
- means for connecting said first means to said drum.

4,370,837
ARRANGEMENT FOR SELECTIVELY CHANGING THE RADIATION AND VIBRATION TRANSMISSION PROPERTIES OF PANELS
Constancio Larguia, 1175 Talcahuano, Buenos Aires, Argentina
Continuation of Ser. No. 961,852, Nov. 17, 1978, abandoned. This application Dec. 16, 1980, Ser. No. 217,097
Claims priority, application Argentina, Nov. 22, 1977, 270073
Int. Cl.³ E04C *1/42*
U.S. Cl. 52—1 **29 Claims**

1. In an arrangement for selectively varying the radiation and vibration transmitting properties of panels usable in buildings and other structures, comprising a panel having two substantially parallel sheets of transparent or translucid material mounted in a supporting frame, said two sheets being spaced apart and defining therebetween an intermediate space for receiving, from a reservoir, low density solid particulate material having predetermined thermal and/or optical characteristics; the improvement comprising:

first inlet means disposed in the upper part of said intermediate space for introducing fluidized particulate material into said intermediate space to fill at least a portion of said intermediate space so as to render said portion of said intermediate space less radiation transmissive,

outlet means vertically spaced below said first inlet means for removing said particulate material filling said portion of said intermediate space and returning same to the reservoir, and

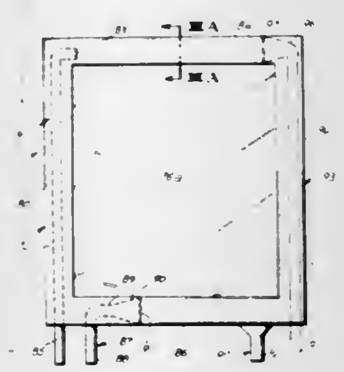

second inlet means disposed at substantially the same level as said outlet means and horizontally spaced from said outlet means for introducing air only into said intermediate space and for urging said particulate material toward said outlet means;

whereby, during and after filling of said intermediate space, said air introduced by said second inlet means levels the particulate material introduced by said first inlet means, and, during removal of said particulate material, said air introduced by said second inlet means urges said particulate material toward said outlet means.

4,370,838
CURTAIN WALL
Eugene F. Vermillion, Columbus, Ohio, assignor to The Columbus Show Case Company, Columbus, Ohio
Filed Aug. 14, 1980, Ser. No. 178,148
Int. Cl.³ E04H *1/00*
U.S. Cl. 52—36 **7 Claims**

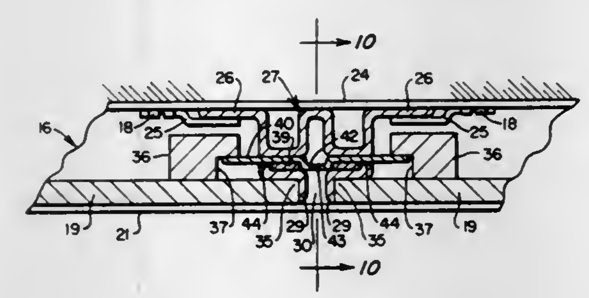

1. A wall comprising:
(a) a pair of opposed, elongated channel-form frame members disposed in vertically spaced apart, generally coplanar relation and defining, respectively, upper and lower channels opening toward one another, said lower channel being shallower than said upper channel;
(b) a plurality of vertically arranged, horizontally spaced apart, hollow-form, studs of integral, one-piece construction having upper and lower end portions extending, respectively, into said upper and lower channels, each of said studs including longitudinally coextensive, outward projecting, panel-separating means;
(c) a rectangular wall panel extending between said channel-form frame members and spanning the space between a pair of said studs and having opposite side edges disposed in substantial abutment with the panel-separating means of each of said pair of studs, and having catch means disposed adjacent a side edge thereof, said panel and studs having length dimensions permitting their ready removal from said channel-form frame members simply by lifting their lower ends above and moving them outwardly from said lower channel; and
(d) a manually operable latch carried by at least one of said studs and accessible through a slot formed in the panel-separating means of the stud, said latch being selectively movable to engage the catch means of said panel and thereby lock said panel to the stud.

4,370,839
POOL CONSTRUCTION
Stanley R. Blakeway, Stafford Heights, Australia, assignor to Blakeway Marviroll Pools Pty. Ltd., Queensland, Australia
Filed Feb. 15, 1980, Ser. No. 121,786
Int. Cl.³ E04H *3/16*
U.S. Cl. 52—169.7 **3 Claims**

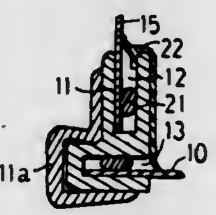

1. A swimming pool construction comprising:
(a) a horizontal bottom section of pliable vinyl-coated sheet steel material configured to the desired shape of the pool,
(b) a substantially vertical wall section of pliable vinyl-coated sheet steel material, said vertical wall section being joined at the contiguous ends thereof and configured, in plan view, complementary to the configuration of said horizontal bottom section,
(c) a flexible junction member comprising a single length of material curved to the configuration of said bottom section, and means for connecting the contiguous ends of said junction member, said junction member being generally L-shaped in cross-section, its lower part being formed with a horizontal parallel sided first groove open to the interior of the pool to receive the periphery of the bottom section, its upright part being formed with a vertical parallel sided second groove open at the top to receive the lower edge of the vertical wall section and perpendicular to and above said first groove,
(d) means for retaining and sealing said wall sections in their mounted position in said junction member, said retaining and sealing means comprising a first resiliently deformable sealing strip under compression yet movable in said first groove adjacent to the inserted part of the bottom section and a second resiliently deformable sealing strip under compression in the second groove adjacent to the inserted part of the vertical wall section, whereby any upward deformation of said bottom section due to external hydrostatic pressure can be accommodated by withdrawal of at least part of said bottom section from said juncture member so as not to cause damage to said pool sections, and
(e) a finishing strip of resiliently deformable plastic material shaped for engagement with the upper inside part of said juncture member and covering the same, said finishing strip bearing against said vertical wall section above said junction member and said strip bottom wall section inwardly of said junction member

4,370,840
INSULATION ANCHOR
Charles B. Bisbee, Newton Square, Pa., and Richard J. Yost, Medford Lakes, N.J., assignors to Combustion Engineering, Inc., Windsor, Conn.
Continuation of Ser. No. 86,981, Oct. 22, 1979, abandoned. This application Sep. 19, 1980, Ser. No. 188,802
Int. Cl.³ E04B *1/62;* **F16B** *21/04*
U.S. Cl. 52—410 **2 Claims**

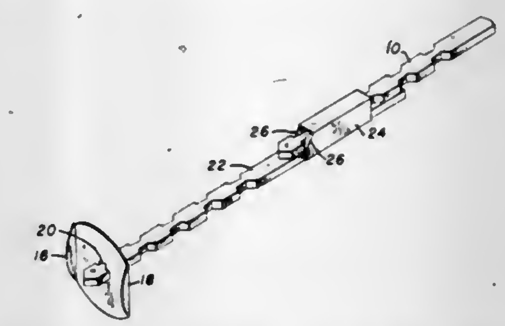

1. A high temperature insulating construction wherein a first metallic stud is attached at one end thereof to a structural supporting member and is disposed essentially perpendicular to the surface of the structural supporting member, said first metallic stud having at least two anchor-engaging notches spaced along the length thereof, the improvement comprising:
a. a second metallic stud having at least one anchor-engaging notch, a portion of said second metallic stud overlapping a portion of said first metallic stud and the remaining portion of said second metallic stud extending outwardly from the end of said first metallic stud essentially perpendicular to and away from said structural supporting surface,
b. means attached to said second metallic stud comprising:
i. a tube portion slidably encircling at least a portion of said overlapping portion of said first metallic stud whereby said second metallic stud and said attached tube portion may be slidably located in a desired position along the length of said first metallic stud,
ii. a notch-engaging portion including a tab, said tab being bent into engagement with one of said anchor-engaging notches on said first metallic stud to retain said second metallic stud in a selected position with respect to said first metallic stud; and
c. anchor means positioned on said second metallic stud and engaging an anchored-engaging notch thereon whereby a body of insulating material greater in thickness than the length of said first metallic stud is superimposed over the structural supporting member and is pierced by said first and second metallic studs and retained thereon by said anchor means on said second metallic stud.

4,370,841
CONNECTOR ASSEMBLY
Moriyoshi Hayashi, Kurobe, Japan, assignor to Yoshida Kogyo K.K., Japan
Filed Jul. 14, 1980, Ser. No. 168,046
Claims priority, application Japan, Jul. 26, 1979, 54-103461[U]
Int. Cl.³ E04C *1/34*
U.S. Cl. 52—464 **4 Claims**

1. A connector assembly for connecting two adjacent panels edge to edge and to a building frame with a joint opening between such adjacent panel edges, each of the panels having a groove extending longitudinally along the edge thereof, the building frame having a portion disposed adjacent to one face of the joint opening, said connector assembly comprising:
(a) at least a pair of first members each including
(1) a base having a single first portion adapted to be held in the groove of a respective one only of the panels and a second portion adapted to be secured to the portion of the building frame, said first portion of the base of one

of said first members of a pair being received in said groove in one only of said adjacent panels and said first portion of the base of the other of said first members of a pair being received in said groove in the other of said adjacent panels only, and
(2) retainer means formed on said second portion of said

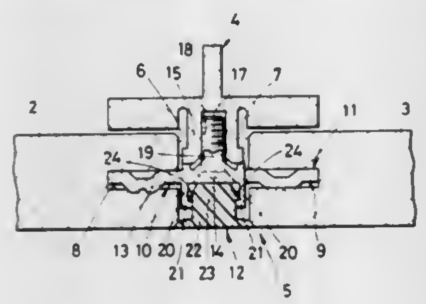

base integrally therewith and adapted to be disposed adjacent to the other face of the joint opening; and
(b) a second member for covering the joint opening on the other face thereof, said second member having at least one leg extending into said retainer means on said second portion of the base of both of said first members of a pair and being retained thereby.

4,370,842
REPAIR PATCHING KIT FOR PANELS
Verble C. Martin, and Robert J. Forestal, both of Indianapolis, Ind., assignors to Vern R. Young, Indianapolis and Peter G. Fruehman, Noblesville, both of, Ind., a part interest to each
Filed Sep. 15, 1980, Ser. No. 186,856
Int. Cl.[3] E04G *23/02*
U.S. Cl. 52—514 **3 Claims**

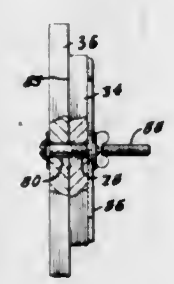

1. A repair patching kit for applying a repair patch to a panel having a hole therein and having restricted access to the interior face to the panel, comprising:
a first body member;
a second body member;
a third body member;
adhesive holding means for operatively holding the second body member operatively against the interior face of the panel in the region of but straddling the hole in the panel, the adhesive holding being adhesive means having a drying or curative time;
and second holding means for operatively holding the first body member in the region of the hole in the panel and connected to the second body member but exteriorly of the second body member and with the exterior face of the first body member operatively flush with or inwardly of the exterior face of the panel;
the said second body member being of a form, in relation to the size of the panel hole, which provides that in an installation step the second member may be passed through the panel hole from exteriorly of the panel to a position interiorly of the panel, but nevertheless is long enough, when moved to a position in which it straddles the panel hole, to provide its function of providing retaining support for the first body member by retaining engagement with the interior face of the panel adjacent the hole;
and means operatively interconnecting the second and the third body members, the third body member being positioned exteriorly of the panel so as to be able to operatively bear inwardly, against the panel outwardly of hole and exteriorly of the panel thus supporting the second body member against the panel throughout the said drying or curative time, the last-mentioned interconnecting means being of easily released nature or form for freeing the third body member from its position bearing against the exterior surface of the panel when the said drying or curative time has passed;
in which the third body member is long enough to operatively straddle the panel hole to present portions of the third body member to provide its temporary support of the second body member, during the drying or curative time of the adhesive means, by operatively bearing inwardly against the panel adjacent the hole therein;
and in the thus-assembled position, the first body member provides a portion of the exteriorly-facing panel repair or a body member to which patching mastic may adhere to in a spread thereof from the exterior surface of the panel outwardly adjacent the hole therein.

4,370,843
WALL SUPPORT BRACE
Richard J. Menge, 33 S. Plaza, Rochester, Mich. 48063
Filed Aug. 21, 1980, Ser. No. 180,123
Int. Cl.[3] E04C *3/292*
U.S. Cl. 52—693 **19 Claims**

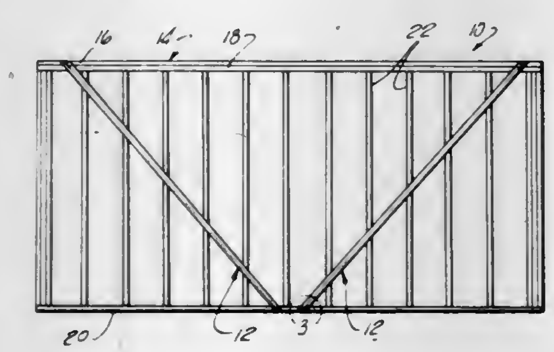

1. A wooden structure of a building construction comprising:
at least one elongated top plate and at least one elongated bottom plate;
a plurality of spaced wooden truss elements secured to said top and bottom plates;
a narrow, transversely inclined channel in each truss element, and said channels are aligned in a manner to receive a straight metal strip inserted therein;
said metal support strip comprising a base portion generally U-shaped in cross section wherein the opposing sides of said base portion extend generally along a first axis, said U-shaped portion being positioned in said channels, and further comprising two flanges extending outwardly from said U-shaped portion and aligned generally along a second axis normal to said first axis wherein the strip is dimensioned in accordance with the relationship: I_y is less than I_x, wherein I_y is the moment of inertia about said first axis and I_y is the moment of inertia about said second axis; and
first means for fixedly securing said strip to the wooden structure.

4,370,844
PACKAGING APPARATUS
Kaj Degn, Hasselager, and Ejvind Waldstrom, Hundslund, both of Denmark, assignors to O. G. Hoyer A/S, Hojbjerg, Denmark
Filed Sep. 12, 1980, Ser. No. 186,468
Int. Cl.[3] B65B *9/06*
U.S. Cl. 53—546 **6 Claims**

1. In an apparatus for wrapping objects in bags, the combination of a feeding conveyor including gripping means for holding and conveying said objects in successive rows each extending transversely of the conveying direction, driving means for advancing lines of wrapping material in substantially parallel spaced relation to each other and in said conveying direction below said conveyor, said gripping means being releasable to deposit the objects upon said lines, means adjacent said lines for folding each line around the objects thereon and sealing the folded line longitudinally into a tube, means for sealing the tube crosswise between successive objects on the line and for cutting the line at each said crosswise sealing, the number of said lines which can be advanced by said driving means being one-half the number of gripping means in each said row, longitudinally spaced first and second stations where objects are deposited upon said lines from the feeding conveyor, means for releasing every second gripping means in a said row at said first depositing station, means for releasing the remaining gripping means in said last-mentioned row at said second depositing station, and means located at at least one of said depositing stations for displacing a row of gripping means transversely of said lines in preparation for depositing of objects, said displacing means being operable to cause each said line to receive from each row a pair of objects which were adjacent each other when approaching said first station.

4,370,845
METHODS OF AND APPARATUS FOR CLOSING BAG MOUTHS
Roland F. Perolls, The Entrance Lodge, Sandy Warren, Sandy, Bedfordshire, and Norman R. Steel, 56 Norton Rd., Letchworth, Hertfordshire, both of England
Filed Aug. 14, 1980, Ser. No. 177,939
Claims priority, application United Kingdom, Aug. 15, 1979, 7928361
Int. Cl.[3] B65B *1/06, 43/30, 7/06, 51/14*
U.S. Cl. 53—572 **11 Claims**

1. A bag filling and closure apparatus, comprising
a filing station including means for opening a mouth of a bag in said filling station;
a supply chute including
means for raising and lowering said chute into and out of the mouth of the bag to be filled,
means for clamping the bag mouth to the chute, and means for moving said chute to and from said filing station; and
a bag sealing station including
a pair of mouth tensioning elements,
first means for moving said elements into and out of the bag mouth supported by said chute,
second means for moving said elements apart to support the bag mouth as said means for clamping the bag mouth are released and as said chute is withdrawn from the bag mouth and returned to said filling station,
elongated heat sealing means for engaging and sealing sides of the bag mouth together, and

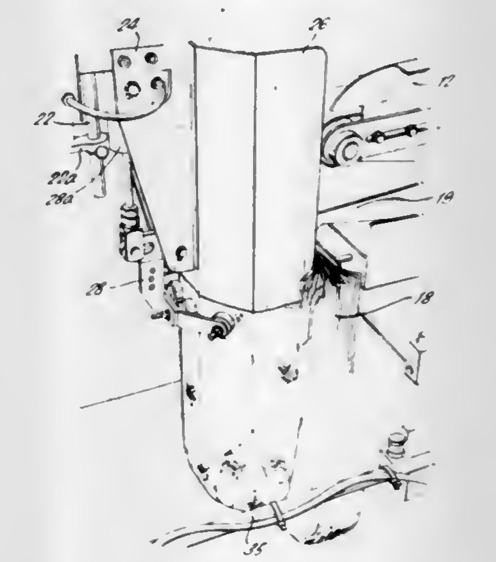

control means for controlling said heat sealing means and said tensioning elements such that said elongated heat sealing means engage and clamp portions of the bag mouth sides lying between said tensioning elements together for partial welding while said tensioning elements are in the bag mouth.

4,370,846
GANG MOWER WITH SINGLE CYLINDER LIFTING MECHANISM
William T. Arnold, Sutton West, Canada, assignor to Brouwer Turf Equipment Limited, Keswick, Canada
Filed Jun. 18, 1981, Ser. No. 274,905
Claims priority, application Canada, Oct. 17, 1980, 362692
Int. Cl.[3] A01D *75/30*
U.S. Cl. 56—6 **20 Claims**

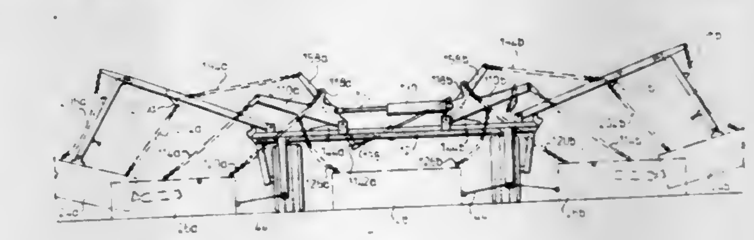

1. A gang mower having:
(1) a frame adapted for movement along a path of travel,
(2) a pair of mowers, one on each side of said frame,
(3) means mounting each mower to said frame for up and down movement of said mower so that said mower may follow the contour of the ground over which it travels,
(4) first actuating means mounted on said frame adjacent one side thereof and associated with said mower on said one side and second actuating means on said frame adjacent to the other side thereof and associated with said mower on said other side,
(5) each actuating means including lifting arm means rotatable from a lowered to a raised position,
(6) connecting means connected between each lifting arm means and its associated mower and dimensioned to raise such mower from a lowered operating position to a raised position when such lifting arm means is rotated from its lowered to a raised position and for permitting said up and down movement of such mower when such mower is in said lowered position,

(7) equalizer link means connected between said actuating means for rotation of one lifting arm means in one direction from one of said raised and lowered positions to the other of such positions to cause equal rotation of the other lifting arm means in the opposite direction of rotation from said one of said raised and lowered positions to the other of such positions,

(8) and means including a piston and cylinder connected to at least one of said first and second actuating means and operable to rotate said one lifting arm means between said raised and lowered positions and thereby to effect rotation of the other lifting arm means in the opposite direction of rotation between said raised and lowered positions, thus to raise and lower said mowers.

4,370,847
GRAPE HARVESTER
Claude B. Arnaud, Theize, France, assignor to Societe Anonyme Dite: Corneloup S.A., Lozanne, France
Filed Oct. 9, 1981, Ser. No. 310,342
Claims priority, application France, Oct. 10, 1980, 80 22094
Int. Cl.^{3} A01D *46/00*
U.S. Cl. 56—330 **10 Claims**

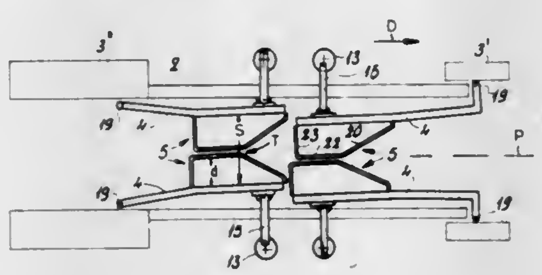

1. A grape-harvesting apparatus comprising:
a portal-type chassis adapted to travel along the ground in a predetermined direction;
two vertical supports on said chassis elongated in said direction and at least limitedly horizontally movable on said chassis, said supports normally flanking an upright median plane extending in said direction;
respective pluralities of vertically spaced and horizontally extending beater wires on said supports, each wire having relative to said direction
a front wire end attached to the respective support,
a forward wire portion inclined inwardly and backwardly toward said plane,
a rear wire portion generally parallel to said plane, and
a rear wire end attached to the respective support behind the respective front end;
drive means on said chassis for synchronously and oppositely displacing said supports with the respective beater wires transverse to said direction while maintaining said supports generally parallel, whereby grapes will be shaken from grape vines between said beater wires.

4,370,848
BALING MACHINE WITH TAPERED BALE CHAMBER
Willis R. Campbell, Ephrata; John H. Freimuth, New Holland; Anthony F. Diederich, Jr., Terre Hill, and Richard E. Jennings, New Holland, all of Pa., assignors to Sperry Corporation, New Holland, Pa.
Filed Sep. 24, 1981, Ser. No. 305,063
Int. Cl.^{3} A01D *39/00*
U.S. Cl. 56—341 **13 Claims**

1. In a roll baling machine for forming cylindrical roll bales of crop material having a base frame and a bale chamber, wherein the improvement comprises at least a portion of said bale chamber being substantially tapered in width generally from its top to its bottom so that the friction between the end surfaces of a cylindrical roll bale and the sides of said bale chamber portion will be less generally toward the top of said bale chamber than toward the bottom thereof to facilitate

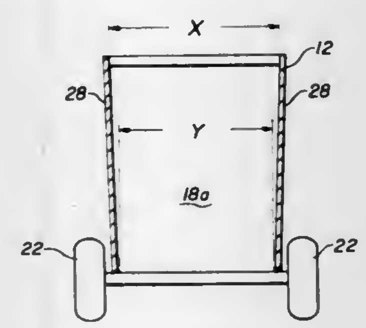

discharge of a roll bale from the machine and whereby the weight of the roll bale aids in discharging it from the machine.

4,370,849
STRANDING DEVICE OF A STRANDING MACHINE
Kanji Suzuki, Tokyo, Japan, assignor to Kabushiki Kaisha Kinrei Kikai Seisakusho, Tokyo, Japan
Filed Sep. 5, 1980, Ser. No. 184,261
Claims priority, application Japan, Sep. 12, 1979, 54-116144
Int. Cl.^{3} D07B *3/08, 7/10;* **B65H** *54/02*
U.S. Cl. 57—71 **3 Claims**

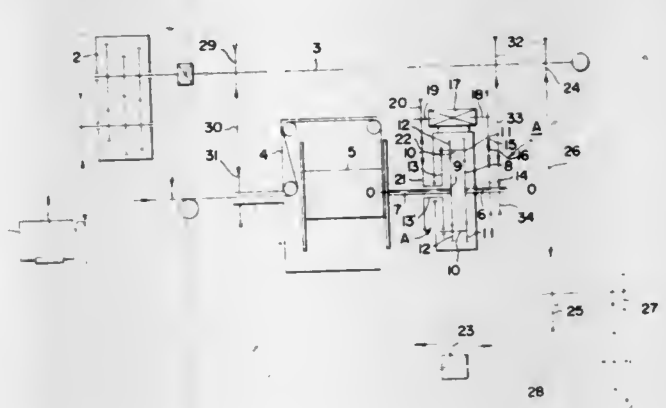

1. A stranding machine for winding a plurality of wires on a winding drum, comprising:
a driving shaft;
a flier for said winding drum;
a first and a second sun gear, said first sun gear mounted on a first shaft driven by said drive shaft, said second sun gear mounted coaxially with first sun gear on a second shaft fixed to said winding drum;
at least one set of first and second planet gears each said at least one set being coaxially mounted on a third shaft and respectively meshing with said first and second sun gears;
a rotating disk rotatably mounted on said second shaft coaxially with said sun gears, each said third shaft being mounted on said rotating disk;
stepless variable ratio transmission means; and
means for transmitting rotational motion from said first shaft to said transmission means and from said transmission means to said rotating disk;
whereby the rotating speed ratio of said winding drum can be changed by varying said transmission means.

4,370,850
ROVING FRAME AND A METHOD OF PACKAGING ROVING
Emil Briner, and Peter Novak, both of Winterthur, Switzerland, assignors to Rieter Machine Works, Ltd., Winterthur, Switzerland
Filed Sep. 26, 1980, Ser. No. 191,302
Claims priority, application United Kingdom, Sep. 28, 1979, 7933785
Int. Cl.^{3} D01H *7/50*
U.S. Cl. 57—96 **24 Claims**

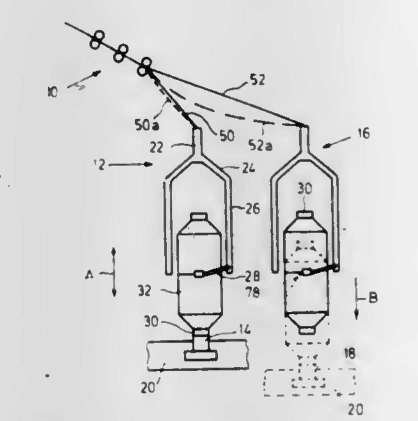

1. A roving frame comprising:
a drafting mechanism for delivering at least one roving;
a spindle for mounting a bobbin thereon;
a rotatable flyer for receiving the roving from said drafting mechanism and for winding the roving onto a bobbin on said spindle to form a roving package; and
a controllable tension adjusting means for reducing tension in a continuous length of roving which extends between said drafting mechanism and the package during stoppage of said drafting mechanism and the package at an intermediate stage of a winding operation.

4,370,851
YARN FALSE TWISTING APPARATUS HAVING ADJUSTABLE FRICTION DISCS
Detley Oberstrass, Tönisheide, Fed. Rep. of Germany, assignor to Barmag Barmer Maschinenfabrik AG, Remscheid, Fed. Rep. of Germany
Filed Jun. 12, 1981, Ser. No. 273,077
Claims priority, application Fed. Rep. of Germany, Jun. 14, 1980, 3022421; Jul. 9, 1980, 3025921
Int. Cl.^{3} D02G *1/08*
U.S. Cl. 57—340 **23 Claims**

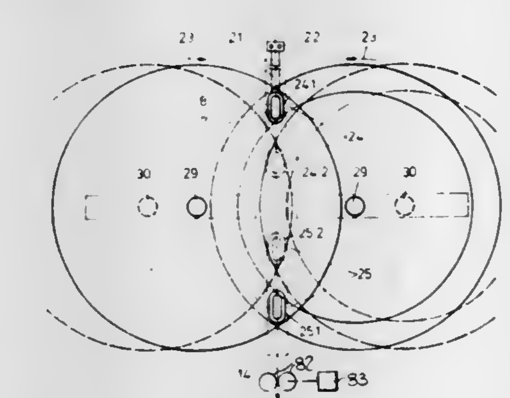

1. A yarn false twisting apparatus comprising
a frame,
a pair of twist imparting circular discs, with each disc including a yarn engaging friction surface, and with at least one of said discs being relatively thin and flexible,
means mounting said discs to said frame, with said discs being rotatable about generally parallel spaced apart axes and such that portions of the respective yarn engaging friction surfaces are disposed in opposing, face to face relationship and define a twisting zone therebetween, and including means permitting selective relative movement of said discs along a direction generally perpendicular to their axes of rotation and parallel to the plane defined by such axes of rotation,
a pressure applying member,
means mounting said pressure applying member to said frame for selective movement along a path of travel which extends perpendicular to said plane defined by the axes of rotation of said discs, and so as to locally bias said one flexible disc toward the other disc only at said twisting zone,
drive means for rotating each of said discs about their respective axes, and such that a yarn may be continuously advanced through said twisting zone while having twist imparted thereto by frictional contact between the yarn and the respective opposed friction surfaces resulting from the force exerted by the biasing means,
whereby the ratio of twist to yarn speed may be selectively varied by selective movement of said discs with respect to said pressure applying member.

4,370,852
FRICTION FALSE TWISTING APPARATUS
Detley Oberstrass, Tönisheide; Wolfgang Hartig, and Klaus Weber, both of Remscheid, all of Fed. Rep. of Germany, assignors to Barmag Barmer Maschinenfabrik AG, Remscheid, Fed. Rep. of Germany
Filed Jun. 12, 1981, Ser. No. 273,079
Claims priority, application Fed. Rep. of Germany, Jul. 9, 1980, 3025884
Int. Cl.^{3} D02G *1/08*
U.S. Cl. 57—340 **5 Claims**

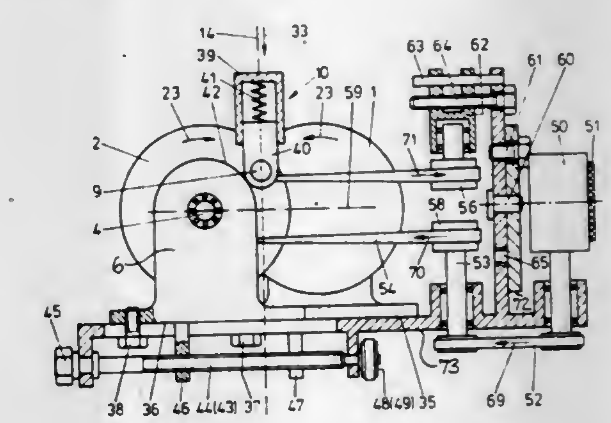

1. A yarn false twisting apparatus comprising
a central frame,
drive means including a drive belt operatively mounted to said central frame for movement along an endless path of travel,
a support bracket,
a pair of twist imparting members rotatably mounted to said support bracket, with each of said members including a yarn engaging friction surface, and such that portions of the respective yarn engaging friction surfaces are disposed in opposing face to face relationship and define a twisting zone therebetween,
a drive whorl rotatably mounted to said support bracket and so as to tangentially contact said drive belt,
means drivingly interconnecting said drive whorl and said twist imparting members, such that a yarn may be continuously advanced through said twisting zone while having twist imparted thereto by the opposed friction surfaces of said twist imparting members, and
means mounting said support bracket to said central frame for pivotal movement through 180 degrees about an axis which is perpendicular to the axis of said whorl and extends through the medial portion of said whorl, to thereby permit selective operation in a first position wherein S

twist is imparted to the yarn and a second position disposed 180 degrees from the first position wherein Z twist is imparted to the yarn.

4,370,853
FRICTION FALSE TWISTING APPARATUS
Karl Bauer; Heinz Schippers, and Peter Dammann, all of Remscheid, Fed. Rep. of Germany, assignors to Barmag Barmer Maschinenfabrik AG, Remscheid, Fed. Rep. of Germany
Continuation-in-part of Ser. No. 272,936, Jun. 12, 1981, which is a continuation-in-part of Ser. No. 168,734, Jul. 14, 1980, Pat. No. 4,339,915. This application Sep. 28, 1981, Ser. No. 306,162
Claims priority, application Fed. Rep. of Germany, Jul. 14, 1979, 2928522; Jun. 26, 1980, 3023887; Jun. 15, 1981, 3123753; Japan, Jun. 26, 1981, 56-98481; Switzerland, Jun. 11, 1981, 3827/81; Jun. 11, 1981, 3830/81; United Kingdom, Jun. 26, 1981, 8119754
Int. Cl.³ D02G *1/08*
U.S. Cl. 57—340 **4 Claims**

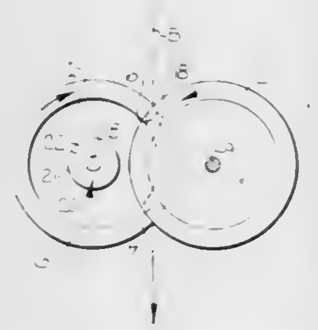

1. A yarn false twisting apparatus comprising
a pair of twist imparting members, with each member including a yarn engaging friction surface, and at least one of said members comprising a circular disc,
means rotatably mounting said twist imparting members such that portions of the respective yarn engaging friction surfaces are disposed in opposing, face to face relationship and define a twisting zone therebetween, said mounting means for said circular disc including a supporting shaft and an elastomeric body member interposed between said circular disc and said shaft so as to permit said disc to resiliently incline with respect to the axis of said shaft,
drive means for operatively rotating each of said twist imparting members about their respective axes, and
means for resiliently biasing said circular disc toward the other member only at said twisting zone,
whereby a yarn may be continuously moved through said twisting zone while having twist imparted thereto by frictional contact between the yarn and the respective opposed friction surfaces.

4,370,854
FUEL VALVE
Raymond L. Williams, Evendale, Ohio, assignor to The United States of America as represented by the Secretary of the Air Force, Washington, D.C.
Filed Sep. 16, 1980, Ser. No. 187,646
Int. Cl.³ F02K *3/10*
U.S. Cl. 60—261 **16 Claims**

1. A liquid fuel valve assembly, comprising:
a. a housing made of high temperature resistant material and having a first constituent portion with a bottom surface, a second constituent portion releasably connected to said first constituent portion, a fuel inlet duct in said first constituent portion with said duct having an inlet, a first liquid fuel discharge duct in said first constituent portion with this duct having a first discharge duct outlet, and a second liquid fuel discharge duct in said first constituent portion with this duct having a second discharge duct outlet, with said first and second discharge duct outlets being located in said bottom surface of said first constituent portion, wherein said first and second discharge ducts of said housing comprise spiral-like voids in said first constituent portion of said housing, with said voids having respective origins on a common axis, and with said voids having

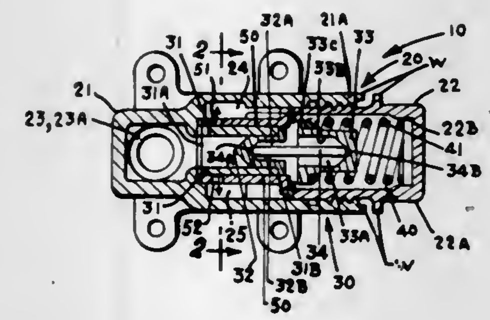

separated respective terminuses which constitute said outlets of said discharge ducts; and
b. a liquid fuel valve subassembly means for selectively controlling a flow of liquid fuel, in said housing, between said inlet of said housing and said first and second discharge duct outlets in said housing.

4,370,855
MUFFLER FOR PORTABLE ENGINE
Lloyd H. Tuggle, Shreveport, La., assignor to Emerson Electric Co., St. Louis, Mo.
Continuation-in-part of Ser. No. 51,950, Jun. 25, 1979, Pat. No. 4,286,675. This application Sep. 8, 1980, Ser. No. 185,251
Int. Cl.³ F01N *3/02, 1/08;* B27B *17/00*
U.S. Cl. 60—317 **20 Claims**

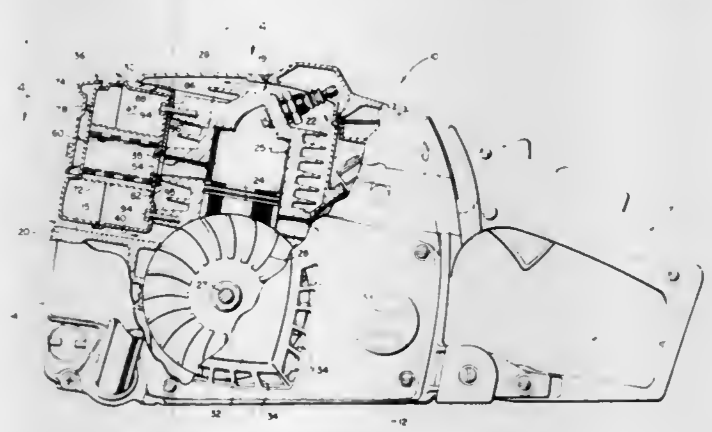

1. A muffler for an internal combustion engine driven hand held power tool, said tool including an engine having a cylinder and an exhaust port in said cylinder, and a cooling air fan, said muffler being adapted to be mounted in a cooling air flowstream provided by said fan, said muffler being characterized by:
a hollow shell having spaced apart endwalls and a peripheral sidewall contiguous with said endwalls to form an expansion chamber;
an opening in one of said endwalls forming a muffler inlet port arranged to be in communication with said exhaust port;
means forming an exhaust gas outlet opening in said shell; and
an exhaust gas deflector disposed on said muffler in relation to said outlet opening in said shell and cooperable with said sidewall of said shell to form a flow passage for exhaust gas exiting said shell whereby the direction of flow of exhaust gas is generally in the same direction as the exhaust gas flow into said muffler from said exhaust port, said deflector including a wall portion spaced from said sidewall of said shell to direct the flow of exhaust gas over at least a portion of said shell and in the same direction as

said cooling air for mixing with said cooling air to cool said exhaust gases and said shell.

4,370,856
CONTROL METHOD FOR WINCH OF MINING MACHINERY
Keishi Ito, and Ryuji Yamada, both of Oomuta, Japan, assignors to Kabushiki Kaisha Mitsui Miike Seisakusho, Tokyo, Japan
Filed Aug. 12, 1980, Ser. No. 177,400
Claims priority, application Japan, Aug. 24, 1979, 54-107075
Int. Cl.³ F15B *7/00*
U.S. Cl. 60—389 **2 Claims**

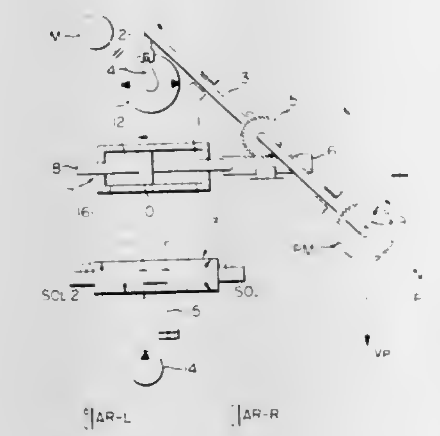

1. An electro-mechanical arrangement for driving a winch, comprising in combination:
(a) actuating means (1) and a motor (M) for driving the actuating means (1);
(b) a lever (4) coupled to the actuating means (1) for adjusting the actuating rate of said actuating means, a central shaft (3) with a pinion (5) thereon coupled to the lever (4);
(c) a rack (6) operatively connected to the pinion (5), a piston rod (8) connected to the rack (6), with a piston (10) in a fluid pressure cylinder (7) defining first and second chambers (11, 12);
(d) fluid pump means (14, 15) connected to said first and second chambers (11, 12) and first and second electric solenoid means for controlling the fluid flow to said first and second chambers (11, 12) to move said rack (6) and turn said pinion (5), first and second switch means to enable said first and second solenoid means, electrical resistance position means (9) coupled to said central shaft (3) giving the position of said shaft as an electrical value;
(e) instruction means (17, 18), for positioning the winch, a pulse generator (19) responsive to said instruction means supplying pulses, counter means (21) counting the pulses, converter means (22), changing said pulses into an electric value, and comparison means (23) coupled to said converter means (22) and to said electrical resistance position means (9); and,
(f) an operating circuit (24) coupled to said comparison means (23) driving said first and second switch means.

4,370,857
PNEUMATIC SYSTEM FOR COMPRESSED AIR DRIVEN VEHICLE
Terry R. Miller, Box 80, Crestline, Kans. 66728
Filed Jul. 11, 1980, Ser. No. 167,524
Int. Cl.³ F60D *31/02*
U.S. Cl. 60—413 **5 Claims**

4. In a fluid power operated motor system, including at least one pair of double-acting piston devices respectively having piston elements and a storage source of pressurized fluid, the improvement comprising, pressure accumulating means operatively connected between said piston devices for transfer of fluid exhausted from one of the piston devices to the other of the piston devices, valve means connected to said piston devices for pressurization of said one of the piston devices and limiting said transfer of fluid exhausted therefrom to spaced intervals of time during which the storage source and the pressure accumulating means are substantially equalized in

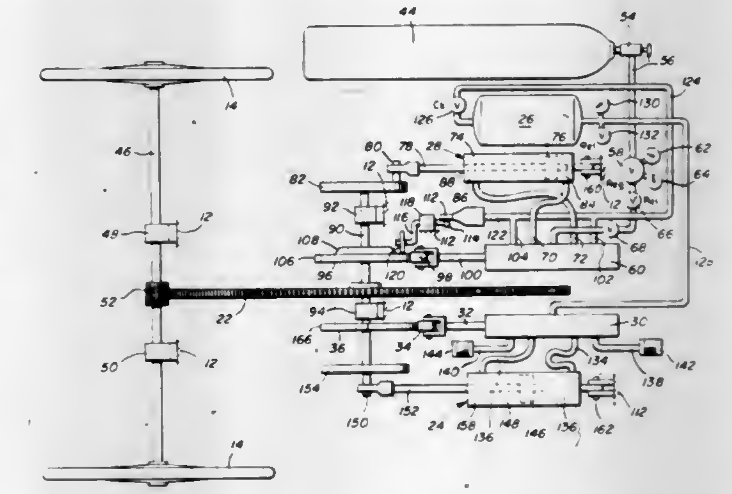

pressure, and vent means for venting the fluid exhausted from said one of the piston devices between said spaced intervals of time.

4,370,858
APPARATUS AND METHOD FOR ENERGY PRODUCTION AND MINERAL RECOVERY FROM GEOTHERMAL AND GEOPRESSURED FLUIDS
Leon Awerbuch, San Francisco, and Alfred N. Rogers, Pleasanton, both of Calif., assignors to Bechtel International Corporation, San Francisco, Calif.
Filed Jul. 31, 1981, Ser. No. 288,713
Int. Cl.³ F03G *7/00*
U.S. Cl. 60—641.5 **77 Claims**

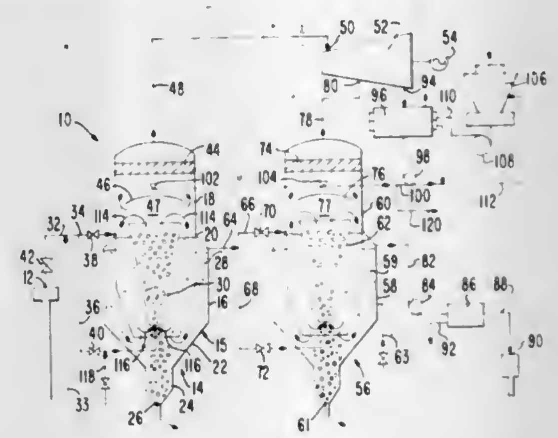

1. A system for processing fluid from a subterranean location with the fluid having an elevated temperature and pressure, having dissolved and suspended solids therein, and capable of being separated into solid, liquid and vapor fractions comprising: a reactor for receiving a flow of the fluid from a subterranean location; means in the reactor for permitting the fluid received thereby to flash to form the vapor fraction and to provide intimate contact of the solid, liquid and vapor fractions of the fluid in a 3-phase fluidization relationship; means coupled with the reactor for directing the vapor fraction out of the reactor; means in the reactor for causing at least a portion of the liquid fraction of the fluid to separate from the solid fraction thereof; means coupled with the reactor for allowing removal of the solid fraction from the reactor; and means coupled with the reactor for directing the separated liquid fraction out of the reactor.

4,370,859
METHOD OF AND MEANS FOR LIFTING WATER AND GENERATING POWER THEREFROM
Gad Assaf, Rehovot, Israel, assignor to Lucien Y. Bronicki, Yavne, Israel, a part interest
Filed Nov. 26, 1979, Ser. No. 97,439
Int. Cl.³ F03G *7/04*
U.S. Cl. 60—641.6 **16 Claims**

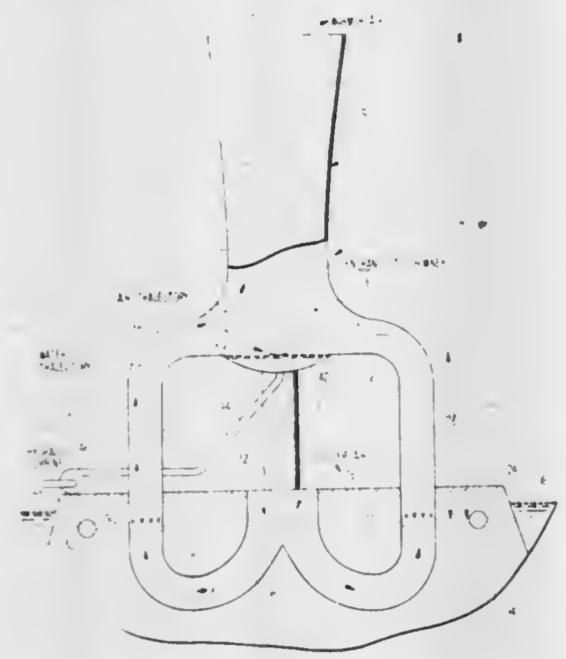

1. A method of lifting water for generating power comprising the steps of:
(a) spraying droplets of relatively warmer water into relatively cooler air for creating an upwardly flowing air mass due solely to a transfer of heat from the water to the air and creating an air/water-droplet environment in which drag forces acting on the droplets raise the droplets from a lower level to an upper level; and
(b) collecting the droplets at the upper level.

4,370,860
METHOD OF AND MEANS FOR GENERATING POWER FROM A HOT BRINE SOURCE
Gad Assaf, Rehovot, Israel, assignor to Solmat, Yavne, Israel
Filed Jun. 3, 1980, Ser. No. 155,971
Int. Cl.³ F03G *7/02*
U.S. Cl. 60—641.11 **44 Claims**

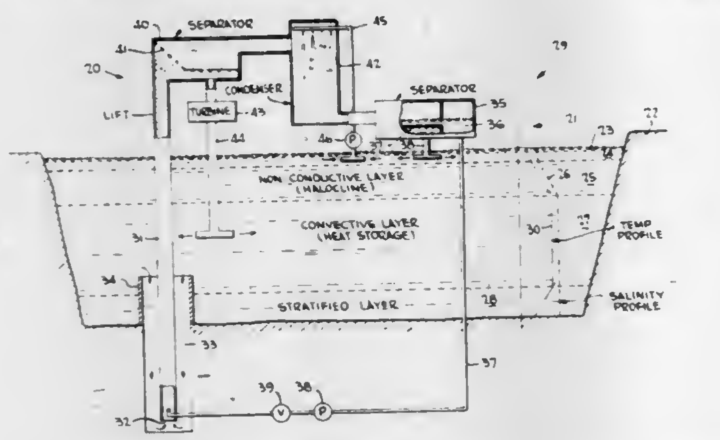

1. A method for generating power from a body of hot liquid working fluid using a direct contact heat exchanger comprising steps of:
(a) injecting liquid operating fluid into the working fluid at a depth which is more than about one-third of the depth at which the pressure of the working fluid is approximately equal to the vapor pressure of the operating fluid at the temperature of the working fluid for producing a bubble regime in a vertically oriented lift tube whose lower end is disposed in the working fluid whereby working fluid in the lift tube is raised as the bubbles rise;
(b) separating the gaseous operating fluid from the liquid working fluid at the top of the lift tube, and returning the latter to the body of hot liquid working fluid;
(c) condensing the gaseous operating fluid and returning it for injection into the working fluid at the lower end of the lift tube; and
(d) passing working fluid lifted in the lift tube through an hydraulic turbine for generating power.

4,370,861
SPIRAL-TYPE HEAT EXCHANGER
Norris G. Lovette, Jr., Breinigsville, and David R. Ruprecht, Laurys Station, both of Pa., assignors to Air Products and Chemicals, Inc., Allentown, Pa.
Division of Ser. No. 199,130, Oct. 22, 1980, Pat. No. 4,324,110. This application Dec. 21, 1981, Ser. No. 333,224
Int. Cl.³ F25D *13/06*
U.S. Cl. 62—63 **3 Claims**

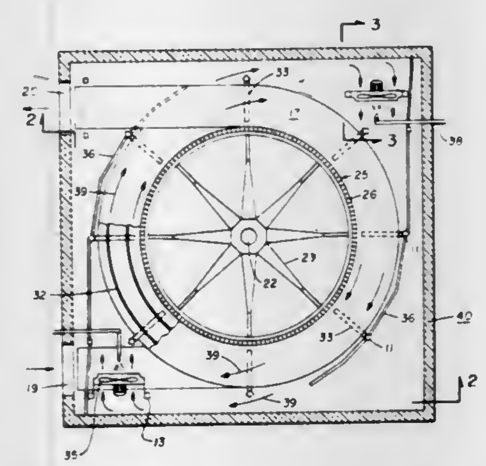

1. The method of refrigerating food articles by heat exchange during their travel through a vertical helical path within an insulated enclosure housing, which method comprises contacting said articles with a recirculating heat exchange fluid flowing along said helical path and coincident with said helical path for a substantial distance thereon, inducing flow of said heat exchange fluid through propulsion by substantially diametrically spaced axial flow fans, positively confining flow of said heat exchange fluid within said helical path for at least a substantial portion of the outer periphery of said helical path, and discharging Refrigerant into said circulating heat exchange fluid substantially at the locus of fan propulsion and in a direction counter to such propulsion.

4,370,862
APPARATUS AND METHOD FOR FREEZING A SLUG OF LIQUID IN A SECTION OF A LARGE DIAMETER FLUID TRANSMISSION LINE
Beryle D. Brister, Amarillo, Tex., assignor to Brister Incorporated, Amarillo, Tex.
Division of Ser. No. 722,665, Sep. 13, 1976, Pat. No. 4,112,706. This application Sep. 6, 1977, Ser. No. 831,052
Int. Cl.³ F25C *1/00*
U.S. Cl. 62—66 **10 Claims**

1. A method of freezing a slug of liquid in a section of fluid transmission line by the transfer of thermal energy from the slug of liquid through the transmission line to a pool of liquid cooling fluid which evaporates when exposed to a predetermined range of pressure and temperature conditions comprising:
enclosing the section of transmission line with thermally insulated material to define an insulated chamber around the section;
discharging liquid cooling fluid into the chamber until the chamber is at least partially filled by the liquid and at least a portion of the enclosed transmission line is submerged in

a pool of the liquid cooling fluid, said step being terminated thereafter during a predetermined interval while the liquid cooling fluid evaporates in response to the transfer of heat from the transmission line, said step being repeated thereafter to replenish the evaporated cooling fluid;
sensing the temperature of the surface of the enclosed transmission line as the chamber is filled;

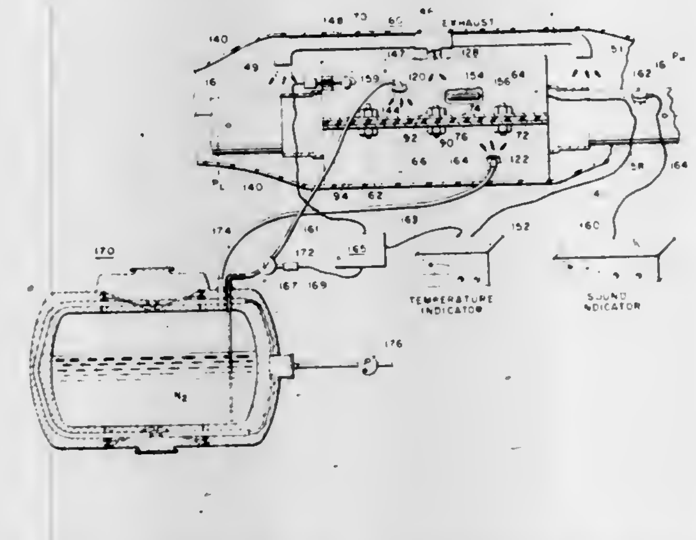

said step of discharging liquid cooling fluid into the chamber being repeated to replenish the evaporated cooling fluid in response to an increase in temperature of the transmission line to a predetermined level as indicated by the temperature sensing step;
agitating the liquid in the pool;
exhausting cooling fluid vapor from the chamber; and
sensing the rate of formation of crystals within the slug of liquid as it freezes.

4,370,863
AIR CONDITIONER
J. D. Fisher, St. Louis, Mo., assignor to Engineered Air Systems, Inc., St. Louis, Mo.
Filed Mar. 12, 1981, Ser. No. 243,071
Int. Cl.³ F25D *17/06*
U.S. Cl. 62—89 **3 Claims**

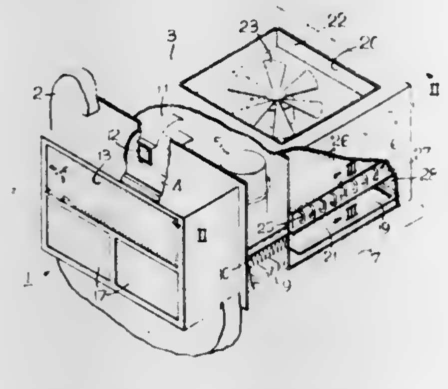

1. A method for providing condenser cooling air to an air conditioner having a solids settling chamber in substantially straight flow-through communication with an air cooled condenser aligned above the settling chamber during operation of the air conditioner in a windy and dusty environment comprising:
drawing an air stream of ambient air vertically upward into a confined, uniformly sized settling chamber in a direction substantially perpendicular to the direction of the natural wind flow in a straight laminar path for a preselected distance at a velocity in the range of 350 feet to 500 feet per minute sufficient to permit settlement of particulate dust matter entrained in said air stream; and
circulating the air stream through the condenser and out of the air conditioner in substantially the same vertical, laminar path as the flow of air passing through the settling chamber.

4,370,864
METHOD AND APPARATUS FOR COOLING HEATED GASES OR LIQUIDS
Theo Wessa, Siedlung 19, 6751 Mackenbach, Pfalz, Fed. Rep. of Germany
Filed Dec. 22, 1980, Ser. No. 218,838
Claims priority, application Fed. Rep. of Germany, Apr. 14, 1980, 3014179
Int. Cl.³ F25D *17/02*
U.S. Cl. 62—98 **13 Claims**

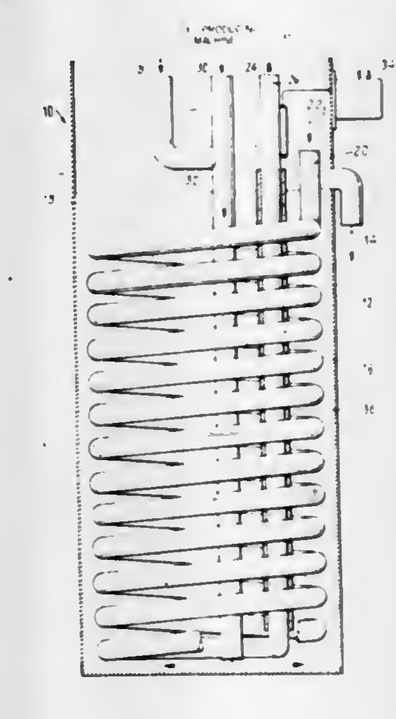

8. The combination comprising:
(A) a cooling machine which produces residual water, said cooling machine utilizing a fluid coolant;
(B) apparatus for cooling said fluid coolant, said apparatus comprising:
(1) an open topped container;
(2) means for supplying cooling water to said container at a location near the bottom thereof;
(3) an overflow outlet located near the open top of said container for permitting overflow water to exit from said container;
(4) a cooling pipe located in said container and extending substantially from the bottom of said container to said overflow outlet;
(5) means for circulating said coolant under pressure through said cooling pipe, said circulating means causing said coolant to flow through said cooling pipe in such a manner that it first comes into thermal contact with said cooling water near the top of said container and thereafter continues down said cooling pipe toward the bottom of said container whereby said coolant comes into thermal contact with increasingly cooler water as it moves down said pipe;
(C) means for introducing said residual water into said container as a part of said cooling water.

4,370,865
ICE-MAKING AND FRESH WATER DISPENSING APPARATUS
Takashi Hibino, and Yoshinori Ito, both of Toyoake, Japan, assignors to Hoshizaki Electric Co., Ltd., Toyoake, Japan
Filed Aug. 31, 1981, Ser. No. 297,972
Int. Cl.³ F25B *25/00*
U.S. Cl. 62—124 **6 Claims**

1. An ice-making and fresh water dispensing apparatus, comprising in combination: an ice-making unit for making pure

ice using a refrigeration system; means for heating the ice issued from said ice-making unit to melt the same into fresh water; a tank for storing the fresh water produced by said melting means; means for sensing the temperature of the fresh water in said tank; means for sensing the water level in said tank; and means for controlling the operations of said heating means and said ice-making unit, said controlling means being operative to terminate heating by said heating means and to continue the operation of said ice-making unit, irrespective of the water level prevailing in the tank, when said water temperature sensing means has determined the water temperature in

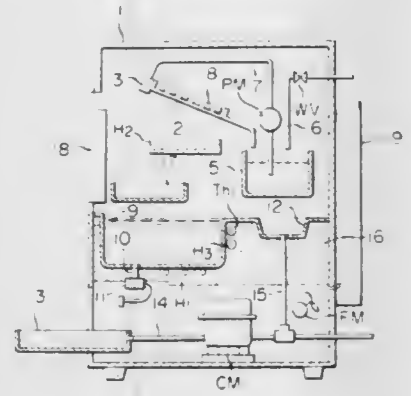

said tank to be higher than a predetermined temperature, to continue both the heating by said heating means and the operation of said ice-making unit when said water temperature sensing means has determined said water temperature to be lower than said predetermined temperature and the water level in said tank is lower than the predetermined water level, and to discontinue the heating by said heating means and continue the operation of said ice-making unit when said water temperature sensing means has determined said water temperature to be lower than said predetermined temperature and said water level is higher than the predetermined water level.

4,370,866
REMOVABLE DUCT PANEL FOR MULTIBAND REFRIGERATED DISPLAY CASES

Fayez F. Abraham, Niles, Mich., assignor to Tyler Refrigeration Corporation, Niles, Mich.
Continuation of Ser. No. 76,568, Sep. 18, 1979, abandoned. This application Dec. 30, 1980, Ser. No. 221,375
Int. Cl.³ A47F *3/04*
U.S. Cl. 62—256 **6 Claims**

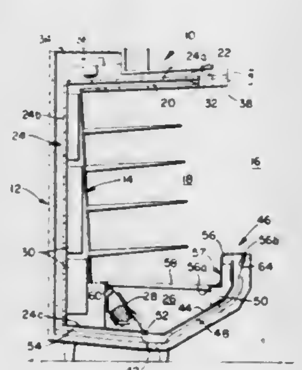

1. A refrigerated display case comprising:
an outer cabinet having a bottom portion which slopes downwardly to form a drain region for collecting fluid material by gravity flow;
an inner cabinet within said outer cbinet and spaced therefrom, said inner cabinet having a product display space therein, said inner and outer cabinets having aligned access openings to permit access to the display space in the inner cabinet;
means intermediate said inner and outer cabinets for dividing the space between said cabinets into adjacent first and second conduits, each conduit having respective outlets and inlets on opposite sides of the aligned cabinet access openings, wherein said intermediate means for dividing the space between the inner and outer cabinets comprises a first relatively fixed bottom panel member and a second removable panel member;
air circulating means for propelling air through said first and second conduits between their respective inlets and outlets and across the aligned access openings between the respective conduit outlets and inlets;
means for refrigerating the air flowing through at least one of the first and second conduits;
means at one end region of the first bottom panel member for loosely receiving therein one end portion of the second panel member;
support means located on the underside of the second panel member for supporting said second panel member on the bottom portion of the outer cabinet in spaced relation thereto;
inlet grill means;
grill support means for loosely supporting said inlet grill means in a position to cover the first and second conduit inlets; and
a removable bottom shelf defining the bottom of the inner cabinet and display space;
said inlet grill means including means for loosely supporting at least a portion of the removable bottom shelf.

4,370,867
OPEN TOP REFRIGERATED DISPLAY CASE WITH AMBIENT AIR DEFROST

Fayez F. Ibrahim, Niles, Mich., assignor to Tyler Refrigeration Corporation, Niles, Mich.
Continuation-in-part of Ser. No. 145,859, May 1, 1980, Pat. No. 4,314,457, and a continuation-in-part of Ser. No. 76,669, Sep. 18, 1979, Pat. No. 4,314,453, and a continuation-in-part of Ser. No. 60,459, Jul. 25, 1979, abandoned, and a continuation-in-part of Ser. No. 11,804, Feb. 14, 1979, abandoned, and a continuation-in-part of Ser. No. 225,997, Jan. 19, 1981, Pat. No. 4,338,792. This application Mar. 18, 1981, Ser. No. 244,959
Int. Cl.³ A47F *3/04*
U.S. Cl. 62—256 **16 Claims**

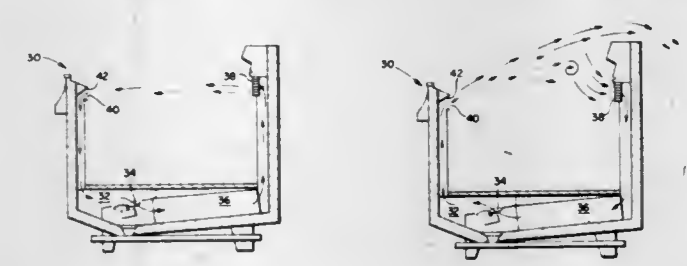

9. An open top refrigerated display case being selectively operated in a refrigeration cycle and adefrost cycle, said display case comprising: a bottom wall and four side walls; an air conduit extending along a first of said side walls, along said bottom wall and a second of said side walls, said first and second side walls being opposing side walls, said air conduit having first and second openings at its opposite ends and each of said openings being located near the top portion of the respective said side wall; means for refrigerating air moving through said air conduit during the refrigeration cycle, said means for refrigerating being arranged within said air conduit; air circulating means circulating air within said air conduit in a forward direction during a refrigeration cycle of operation and circulating air in a reverse direction during a defrost cycle of operation, said air circulating means drawing in ambient air from outside of said display case through said first opening when said air circulating means circulates air within said air conduit in a reverse direction; means for switching the operation of said display case between a refrigeration cycle and a defrost cycle; means for directing air leaving said air conduit during a defrost cycle of operation along a path for causing such air to flow over the opposing said side wall of said display

case; and, means for increasing the velocity of emitted defrost air to a sufficient velocity so that such air will flow over such opposing said side wall so that such air substantially avoids reentering said air conduit, and means for increasing the velocity of the air leaving said air conduit during a defrost cycle of operation including means for restricting a portion of the width of said air conduit in an area in the proximity of the second opening of said air conduit.

4,370,868
DISTRIBUTOR FOR PLATE FIN EVAPORATOR

Tong S. Kim, and Yong N. Lee, both of Arlington Heights, Ill., assignors to Borg-Warner Corporation, Chicago, Ill.
Filed Jan. 5, 1981, Ser. No. 222,455
Int. Cl.³ F25B *39/02*
U.S. Cl. 62—504 **14 Claims**

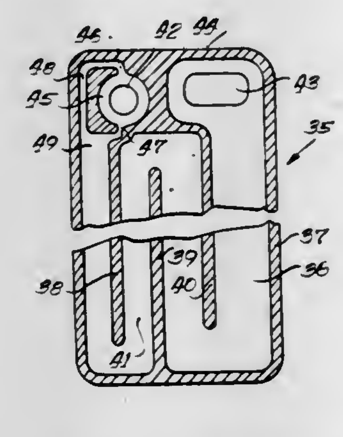

1. An evaporator for an air conditioning system receiving a liquid-vapor mixture of refrigerant from an expansion valve and comprising a plurality of core elements arranged in parallel, each core element formed from a pair of oppositely dished plates joined at the edges and defining an inlet, an outlet and a core cavity connecting the inlet and outlet, the improvement comprising at least one inlet header defined by the inlet openings of the core elements receiving the liquid-vapor refrigerant mixture, an outlet header defined by the outlet openings, a liquid supply orifice from said inlet header to the core cavity of each core element, and a separate vapor supply orifice from said inlet header to the core cavity of each core element to provide an equal distribution of refrigerant liquid and vapor from said header to each of said core elements.

4,370,869
GEAR-TYPE UNIVERSAL COUPLING

Jorgen W. Jonassen, 120 Overlook Ter., Bloomfield, N.J. 07003
Filed Jul. 18, 1979, Ser. No. 58,833
Int. Cl.³ F16D *3/18*
U.S. Cl. 464—156 **10 Claims**

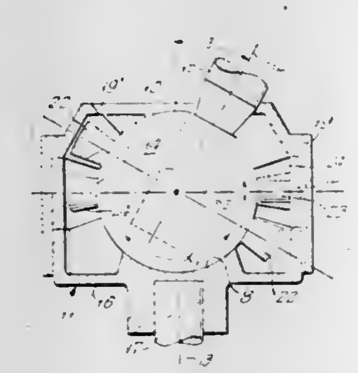

1. A gear-type torque-transmitting universal coupling, comprising rotatable input and output members having coacting formations to retain the same point of intersection of their respective rotary axes while permitting angular flexibility of the relative orientation of said axes about said point of intersection, a first plurality of radially outward tooth formation in the radial plane of said point on one of said members, a second and corresponding plurality of radially inward tooth formations in the radial plane of said point on the other of said members, the teeth of said first and second pluralities being angularly interlaced and all teeth being right-frusto-conical, each tooth being on a radial axis which intersects said point and each tooth being geometrically convergent to said point.

4,370,870
CROCHETING AID

Norma J. Kroh, c/o George Spector, 3615 Woolworth Bldg., 233 Broadway, and George Spector, 3615 Woolworth Bldg., 233 Broadway, both of New York, N.Y. 10007
Filed Nov. 17, 1980, Ser. No. 207,754
Int. Cl.³ D04B *35/00*
U.S. Cl. 66—1 A **3 Claims**

1. A crocheting aid for handicapped people comprising a wristband with a fork mounted thereon, said fork extending forward having spaced tines at a forward end, said fork having a rear end secured transversely to said band in combination with a fabric secured to said band and to an aligned yarn holder at a forward end provided with a finger hole below said holder, said yarn holder, fork and fabric being in longitudinal alignment when mounted in users hand with the band mounted about the users wrist and the users forefinger extending through said hole, said yarn holder including a guide for a strand of yarn and wherein said tines comprise guiding means for said yarn, which extends through the guide and tines, including adjustment means for varying the length of said yarn holder.

4,370,871
WARP KNITTED NARROW LACE AND PROCESS FOR PREPARATION THEREOF

Noboru Nakagaki, and Hroaki Fujikawa, both of Fukui, Japan, assignors to Takeda Lace Co. Ltd., Fukui, Japan
Filed Nov. 2, 1979, Ser. No. 90,534
Claims priority, application Japan, Nov. 4, 1978, 53-136081
Int. Cl.³ D04B *7/16*
U.S. Cl. 66—202 **1 Claim**

1. A warp knitted narrow lace fabric having a scalloped edge with decorative loops or purls along substantially the entire scalloped edged comprising a Raschel lace base fabric having curved scallops with outermost portions and indented portions formed by knitting a pattern in the base fabric, purls formed by knitting laid in yarns on the outermost portions of said scallops

and purls formed by laying in laid in yarns with stitches of the base fabric in the indentations of the scallops, the stitches of

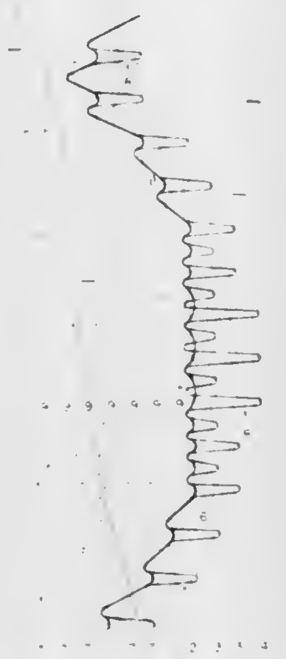

said base fabric located outwardly of said purls in said indentations being cut and removed.

4,370,872

APPARATUS FOR CONTINUOUSLY TREATING STRAND-LIKE TEXTILE MATERIAL IN VERTICAL LOOPS

Wolfgang Tschirner, Tönisvorst, Fed. Rep. of Germany, assignor to Kleinewefers GmbH, Krefeld, Fed. Rep. of Germany

Filed Oct. 17, 1980, Ser. No. 198,051

Claims priority, application Fed. Rep. of Germany, Oct. 17, 1979, 2941900

Int. Cl.³ D06B *3/28*

U.S. Cl. 68—158 **5 Claims**

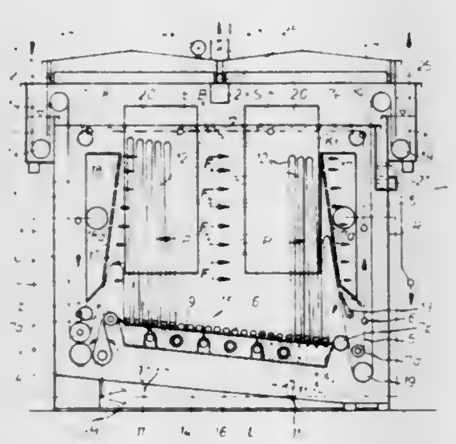

1. An apparatus for continuously treating loops of strand-like textile material, said apparatus comprising:

a container, for treatment liquid, having a bottom and side walls;

transverse bars, having a length greater than the width of said textile strand, for guiding said textile strand through said liquid;

an endless chain connected to said transverse bars and guided in the vicinity of said container bottom and side walls;

an air permeable and liquid permeable stationary support arranged in said container near said bottom thereof for supporting and guiding said transverse bars, said support being inclined relative to the horizontal from the textile strand inlet side to the textile strand outlet side of said container;

upwardly directed nozzles located in said container below said support and arranged to discharge an upwardly directed flow between said transverse bars to aid in formation of the loops of strand-like textile material; and

a device for generating a transverse flow of said treatment liquid in said container so that the transverse flow aids in transporting the loops of strand-like textile material across said container.

4,370,873

LATCH MECHANISM AND VANDAL RESISTANT HOUSING

Gregory A. Edmunds, 3011 Brinkley Rd., Temple Hills, Md. 20031

Filed Feb. 28, 1980, Ser. No. 125,444

Int. Cl.³ E05B *15/00, 63/00, 65/08;* **G07F** *17/20*

U.S. Cl. 70—163 **5 Claims**

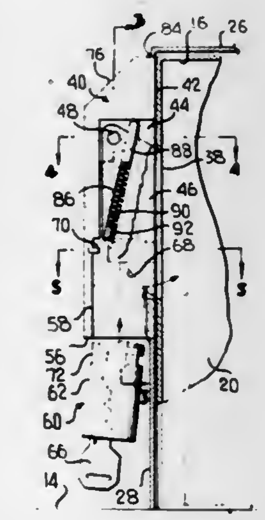

1. A vandal resistant latch mechanism for use in conjunction with coin boxes and the like, said latch mechanism comprising a block of hardened metal having a latching face, a slot opening through said latching face, a latch member, pivot means mounting said latch member for pivoting between an inoperative position within said slot and a latching position projecting from said latching face, said block having an end, a locking receiving opening extending through said end into said slot, and a removable barrel type key actuated lock releasably seated in said opening and forcing said latching member to said latching position, said latch mechanism being part of a protective housing particularly configurated to overlie and protect an ordinarily exposed housing used on a coin actuated mechanism and coin box of the type used in combination with washing machines, dryers and the like, and said protective housing has an opening therein for the passage of coin receiving mechanism.

4,370,874

UNIVERSAL LATCH-LOCK ASSEMBLY

Fred O. Munn, 4510 Town & Country Dr., Charlotte, N.C. 28211

Filed Jul. 27, 1981, Ser. No. 287,160

Int. Cl.³ E05B *5/02, 13/00, 63/04;* **E05C** *3/04*

U.S. Cl. 70—204 **5 Claims**

1. A latch assembly adaptable for use with a panel mounted for either right-hand or left-hand swinging movement in a mating frame and between open and closed positions, said latch assembly being easily convertible to a latch-lock assembly and comprising

a. a pan-shaped housing including a peripheral rim mounted on and surrounding an opening in said panel, and a depressed central surface positioned in the opening in said panel,

b. a latch-operating stem supported for rotation in said depressed central surface of said pan-shaped housing and including an outer end portion extending through said depressed central surface of said housing, and an inner end portion extending inwardly from said depressed central surface,

c. an operating handle secured to said outer end portion of said latch-operating stem, said handle being manually operable to rotate said latch-operating stem,

d. a latching pawl including an inner end fixed on a medial portion of said latch-operating stem and a free outer end extending outwardly therefrom, said latching pawl being movable with rotation of said latch-operating stem between a latched position with said free outer end in en-

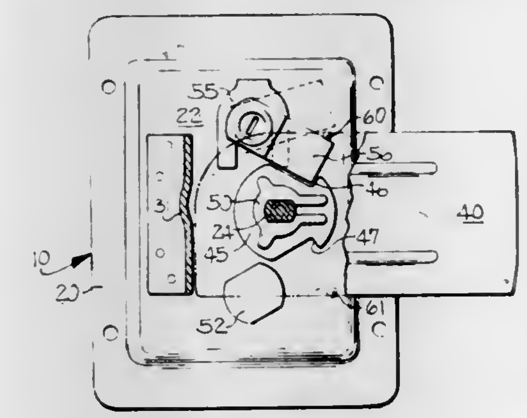

gagement with said mating frame and an unlatched position with said free outer end out of engagement with said mating frame,

e. a locking collar fixed on said latch-operating stem and adjacent the inside of said depressed central surface, and

f. a knockout formed in said depressed central surface of said pan-shaped housing and positioned on each side of said latch-operating stem, said knockouts being shaped to selectively receive a key-operated locking cylinder which is engageable with said locking collar to convert the latch assembly to a latch-lock assembly.

4,370,875

SLIPPING CYLINDER LOCK

Paavo Piiroinen, Joensuu, Finland, assignor to Oy Wartsila AB, Helsinki, Finland

Filed Feb. 14, 1979, Ser. No. 12,243

Claims priority, application Finland, Feb. 17, 1978, 780542

Int. Cl.³ E05B *63/00*

U.S. Cl. 70—422 **14 Claims**

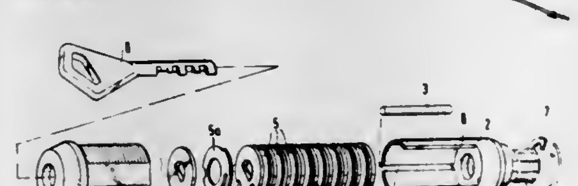

1. A cylinder lock comprising a fixed cylinder housing in which there is a turnable cylinder and locking means for locking said cylinder to said cylinder housing, and wherein turning of said cylinder is performed by means of the key of the lock upon setting said lock mechanism in a cylinder-releasing position by means of said key, said cylinder lock including means for transmitting force from said key to said cylinder, in a first stage of the function of the lock through a clutch device having a slipping function at overload so as to permit those elements of the lock mechanism being enclosed in said cylinder and being directly actuated by said key to slip relative to said cylinder in the turning direction of the key in case said key has not set said lock mechanism in said cylinder-releasing position.

4,370,876

METHODS OF CONSTRUCTING A ONE-PIECE ROOF VENT DEVICE

James W. Ballard, 34934 Elmira, Livonia, Mich. 48150, and Larry R. Ballard, 18633 Negaunee, Redford Township, Wayne County, Mich. 48240

Division of Ser. No. 968,192, Dec. 11, 1978, Pat. No. 4,214,513. This application Jul. 25, 1980, Ser. No. 172,414

Int. Cl.³ B21D *51/16*

U.S. Cl. 72—68 **23 Claims**

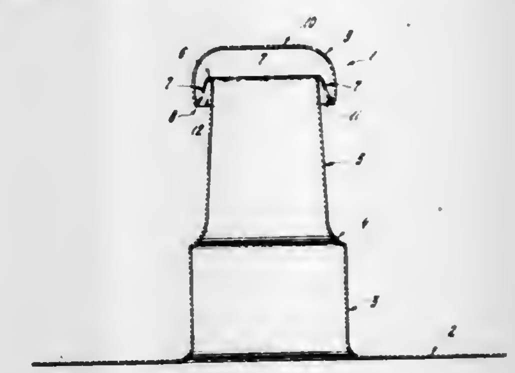

1. A method of manufacturing a one-piece ventilation apparatus, comprising the steps of:

forming a substantially hollow projection in a sheet-shaped member,

said substantially hollow projection being substantially perpendicular to said sheet-shaped member; and

folding an end of said substantially hollow projection longitudinally toward and into overlapping relationship to said one end of said projection to form cap-shaped structure at said end of said projection.

4,370,877

ROLLING MILL ROLLS

Jacques M. Michaux, Joeuf, France, assignor to Sacilor-Acieries et Laminoirs de Lorraine, Hayange, France

Filed Aug. 11, 1980, Ser. No. 176,678

Claims priority, application France, Feb. 4, 1980, 80 02382

Int. Cl.³ B21B *39/16, 39/18*

U.S. Cl. 72—222 **5 Claims**

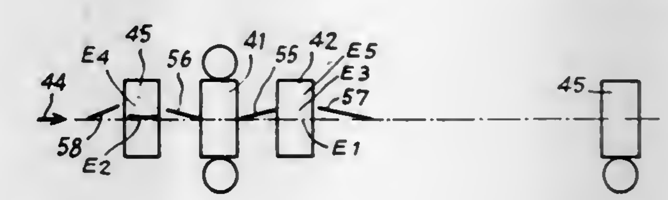

3. An improved rolling mill for rolling rails from rail blanks including a finishing stand and at least a universal edger group, each group comprising at least a universal stand having four rolls grooved and set to provide a single universal pass-line irrespective of the number of passes made therein and at least an edger stand having at least two horizontal rolls with the rolls of at least an edger stand being grooved and set to provide a plurality of specific edging grooves, each said groove having a plurality of active deep cavity portions and a bridging non-active shallow portion, said specific edging grooves having parallel but separate edging pass-lines, wherein all stands within any universal edger group are arranged on a straight-away line and are operated in tandem, that is with rail blanks being simultaneously contacted for a period by the rolls of all stands of said universal-edger group and with all driven rolls of said stands being rotated in the same direction, said rolling mill including guides located between each stand of each universal-edger group to direct the rail blank within each universal-edger group from the pass-line of a stand into the pass-line of a downstream stand and including guides located upstream and downstream of each universal-edger group to direct the rail

blanks into and out of respectively the entry and delivery sides of each universal-edger group and of the finishing stand wherein the improved rolling mill comprises:

at least an edger stand, the rolls of which are grooved and set to provide a plurality of specific overlapped edging grooves having in common in an overlapped relationship a part of their bridging non-active shallow portions, with the pass-line of at least one overlapped edging groove being transversely offset with respect to the single universal pass-line of at least a universal stand of the same universal-edger group as said edger stand; and

first means to deviate laterally the rail blanks delivered along the single pass-line of at least a universal stand, towards an offset pass-line of an overlapped edging groove; and

second means to take over and to guide the deviated rail blanks into the offset pass-line of an overlapped edging groove; and

third means to deviate laterally the rail blanks delivered along the offset pass-line of an overlapped edging groove towards the next single pass-line of a next-to-roll stand.

4,370,878

WORKPIECE EJECTOR SYSTEM FOR PRESSES

Louis F. Carrieri, LaGrange Park, Ill., assignor to Gulf & Western Manufacturing Company, Southfield, Mich.

Filed Feb. 9, 1981, Ser. No. 232,733

Int. Cl.³ B21D *45/04*

U.S. Cl. 72—345 **25 Claims**

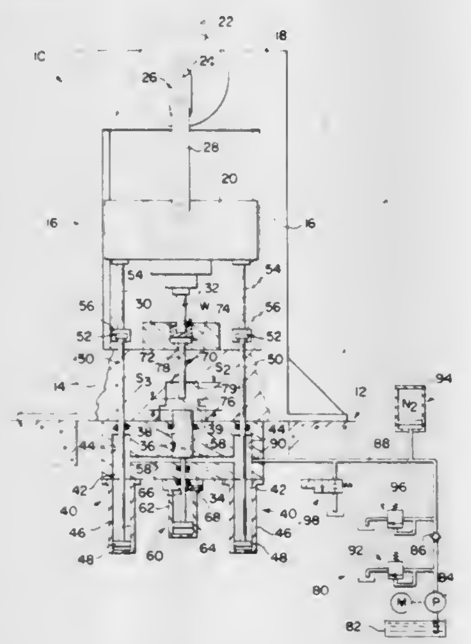

1. A hydraulic workpiece ejector system for a press having frame means supporting first tool means, slide means reciprocable through a slide stroke between first and second slide positions relative to said first tool means, said slide means carrying second tool means cooperable with said first tool means in said first slide position to perform work on a workpiece interposed therebetween, and means to reciprocate said slide means, said ejector system including ejector means associated with one of said first and second tool means and including hydraulic fluid operated ejector actuating means, relatively displaceable means including hydraulic fluid chamber means and means to vary the volume of said chamber means, said relatively displaceable means being connected between said frame means and slide means to continuously vary the volume of said chamber means in response to reciprocation of said slide means and throughout said slide stroke, and continuously open flow line means connecting said chamber means with said ejector actuating means, whereby said actuating means is displaced in an ejecting direction relative to said one tooling means during movement of said slide means from said first toward said second slide position and with a motion of displacement corresponding to the motion of displacement of said slide means.

4,370,879

METHOD FOR MANUFACTURING A PIERCING MANDREL

Boris D. Kopysky, Schelkovskoe shosse, 85, korpus 2, kv. 43; Viktor D. Dmitriev, Yasenevo, 1 Mikroraion, korpus 7"b", kv. 104, both of Moscow; Georgy I. Khaustov, ulitsa Pestelya, 21, kv. 4, Nikopol Dnepropetrovskoi oblasti; Viktor M. Brodsky, Grechesky pereulok, 14, kv. 3, Dnepropetrovsk; Vitaly A. Surzhikov, prospekt Lenina, 41, kv. 19, Nikopol Dnepropetrovskoi oblasti; Evgeny I. Semenov, ulitsa Ivana Babushkina, 3, kv. 426, Moscow; Vladimir G. Chus, prospekt Pushkina, 25/27, kv. 32, Dnepropetrovsk; Viktor A. Misjulya, prospekt Vorontsova, 75, kv. 14, Dnepropetrovsk; Leonid F. Kandyba, ulitsa Vakhrusheva, 54, Dnepropetrovsk; Igor P. Ivanov, ulitsa Ingerina, 22, kv. 5, Dnepropetrovsk; Grigory I. Bezzub, ulitsa Adreichenko, 40, Dnepropetrovsk; Yasha F. Goldenberg, ulitsa Vakhrusheva, 1, kv. 4, Dnepropetrovsk; Ilya S. Zonnenberg, Sumskoi proezd, 12, korpus 5, kv. 30, Moscow; Alexandr G. Paly, ulitsa Pestelya, 4, kv. 1, Nikopol Dnepropetrovskoi oblasti, and Arkady S. Malkin, ulitsa Pestelya, 6, kv. 1, Nikopol Dnepropetrovskoi oblasti, all of U.S.S.R.

Filed Aug. 26, 1980, Ser. No. 181,613

Int. Cl.³ B21K *5/02*

U.S. Cl. 72—377 **4 Claims**

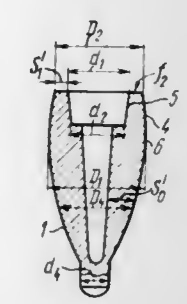

1. A method of manufacturing a piercing mandrel being spindle-shaped in form and having an axial, dead-end conical cavity formed on the side of the mandrel fitting section, a nose formed at the end of the mandrel working section, and a sizing band arranged between the working and fitting sections, comprising:

preforming a blank with an enlarged conical cavity having dimensions greater than those of the dead-end conical cavity by way of hot piercing;

presizing said blank so that the dimensions of the enlarged conical cavity are reduced and the outer diameter of the blank, at the end face of the fitting section, is reduced to be from 0.9 to 1.02 times the diameter of the mandrel sizing band, the outer diameters of the mandrel working section and nose being from 0.9 to 1 times the diameters of the respective sections of the mandrel, and the wall thickness at the fitting and working sections being from 0.7 to 1 times the wall thickness of the mandrel; and

subjecting the presized blank to hot upset forging thereby forming the fitting section of the mandrel by deformation, simultaneously with upset forging of the working section of the mandrel, and performing final sizing of the said dead-end conical cavity of the mandrel.

4,370,880

METHOD AND APPARATUS FOR BENDING SHEET-PLATE BLANKS TO FORM SHELLS HAVING CYLINDRICAL CURVATURE

Rune Adolfsson; Gert A. Persson, and Hans A. H. Persson, all of Ystad, Sweden, assignors to AB Carbox, Ystad, Sweden

Filed Jun. 3, 1981, Ser. No. 269,877

Claims priority, application Sweden, Jun. 19, 1980, 8004571

Int. Cl.³ B21D *5/01*

U.S. Cl. 72—389 **21 Claims**

1. In a method of bending a substantially planar, plastically deformable sheet-metal blank or plate into a shell of cylindrical curvature by stepwise displacement of the plate and downwardly pressing said plate between normally provided first and second spaced apart die bars arranged on a die bed plate by means of a punch edge of a punch member, the punch member being arranged normally to press said plate substantially centrally between said first and second spaced apart die bars,

the improvement comprising:

when bending the end parts of the plate, locating an additional die bar at a greater distance from the end in question of said plate and at a higher level than a first one of said first and second normally provided spaced apart die bars

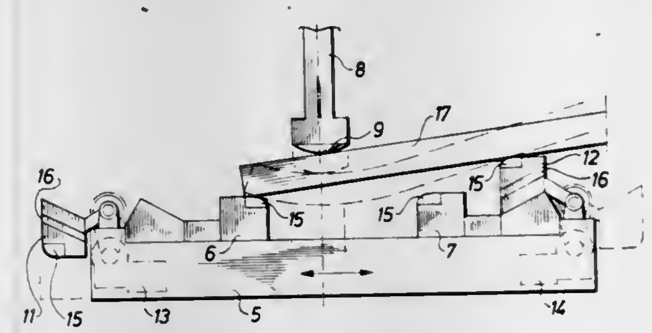

which is located furthest from said plate end, said additional die bar functionally replacing said first normally provided die bar; and

causing said punch member to press said plate nearer to the second normally provided die bar which is located nearest the plate end in question, so that bending of the respective end parts of the plate is carried out while downwardly pressing said plate with said punch member with the end portion of said plate supported by said second normally provided die bar and a portion of the plate spaced from said end portion supported by said additional die bar.

4,370,881

DIE SET HAVING RESILIENT WORKPIECE RETENTION MEANS

Joseph Peterpaul, West Orange, N.J., assignor to Thomas & Betts Corporation, Raritan, N.J.

Filed Dec. 30, 1980, Ser. No. 221,393

Int. Cl.³ B21D *22/06*

U.S. Cl. 72—402 **15 Claims**

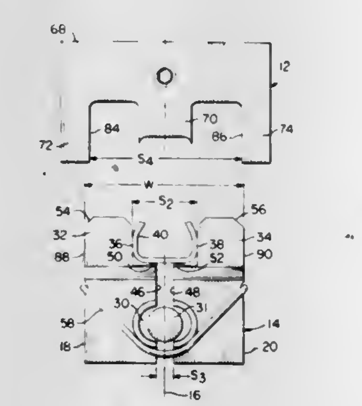

1. A die set for deforming a workpiece comprising:

a first die member;

an expandable and contractable die nest on said first die member;

means for biasing said die nest for securely retaining said workpiece therein; and

a second die member movable into engagement with said first die member to contract said die nest, said second die member including an anvil means movable into said contracted die nest for deforming said workpiece therein.

4,370,882

VEHICLE FRAME STRAIGHTENING APPARATUS

Claude Labbe, Duson, La. 70529

Division of Ser. No. 925,373, Jul. 17, 1978, Pat. No. 4,247,966, which is a continuation of Ser. No. 740,052, Jan. 8, 1976, abandoned. This application Jan. 9, 1981, Ser. No. 223,582

Int. Cl.³ B21D *1/12*

U.S. Cl. 72—447 **15 Claims**

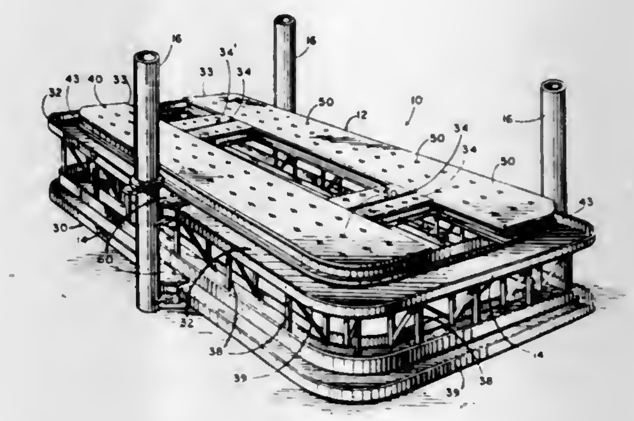

1. An apparatus for straightening damaged vehicle frames, comprising:

a. a rigid structural ramp capable of supporting a vehicle thereon;

b. a track at least partially surrounding said ramp;

c. a wheeled post movably mounted on said track for movement on said track about said ramp;

d. power means movably mounted on said post for imparting alternatively as desired a compressive force and a tensile force to the damaged frame, said power means being movable both in the horizontal and vertical planes with respect to said ramp and comprising a jack with a pressure head movably mounted on said wheel post, associated rigid means attached to said jack, and an elongated flexible member of high tensile strength attachable to said rigid means, said jack being easily convertible from a first compression position with said pressure head directed toward said ramp to a second tensile disposition, an extension of said jack being capable of applying a compression force through said pressure head to a vehicle on said ramp when said jack is in said first position, an extension of said jack also being capable of applying a tensile force to a vehicle on said ramp through said flexible means attached at one part of its length to the vehicle and attached at another part of its length to said rigid means attached to said jack when said jack is in said second disposition.

4,370,883

METHOD OF MEASURING THE POWER OUTPUT OF AN AUTOMATIVE VEHICLE ENGINE ON A ROLLER TESTING BENCH

Paul Coetsier, Chelles, and Robert Ravarotto, Villiers sur Marne, both of France, assignors to Etablissements M. Muller & Cie, Paris, France

Filed Oct. 14, 1980, Ser. No. 196,312

Claims priority, application France, Oct. 16, 1979, 79 25662; Aug. 6, 1980, 80 17347

Int. Cl.³ G01L *5/13*; G01M *15/00*

U.S. Cl. 73—117 **6 Claims**

1. In a method of measuring the power output of an automotive vehicle engine on a roller-type testing bench, in which the vehicle velocity and/or a number of revolutions per minute of the engine thereof at which it is desired to make the measurement are selected, the engine rotational velocity is accelerated during a first acceleration phase up to the selected value from which the power delivered to the drive wheels is measured, the engine is subsequently slightly accelerated beyond said selected velocity, whereafter the drive is disengaged and the transmission mechanism set to neutral, and the rotation of the

bench rollers is allowed to slow down until the rollers come to a standstill while they drive the engine transmission by inertia, in order to measure during this second deceleration phase the power lost in the transmission; the improvement wherein a signal generator is fitted to a measuring roller of said testing bench, the period of the electric signals emitted from said generator is measured, as a function of the variation in the

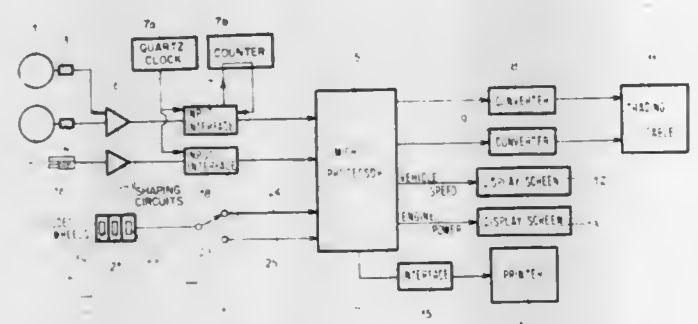

rotational velocity of the roller, by means of a quartz clock at a predetermined frequency, whereafter the power is calculated from the measured period and from the moment of inertia of the rollers, and the roller velocity is also calculated from the aforesaid period and the roller radius, said power and roller velocity being determined at predetermined time intervals during the acceleration and deceleration phases.

4,370,884

OPERATIONAL TESTING DEVICE FOR INLET VALVES AND OUTLET VALVES OF RECIPROCATING ENGINES

Gerhard Wöss, and Erich Schreiber, both of Graz, Austria, assignors to Hans List, Graz, Austria

Filed Dec. 10, 1980, Ser. No. 215,069

Claims priority, application Austria, Dec. 19, 1979, 8022/79

Int. Cl.³ G01L *3/26, 5/13;* G01M *15/00*

U.S. Cl. 73—117.3 — 3 Claims

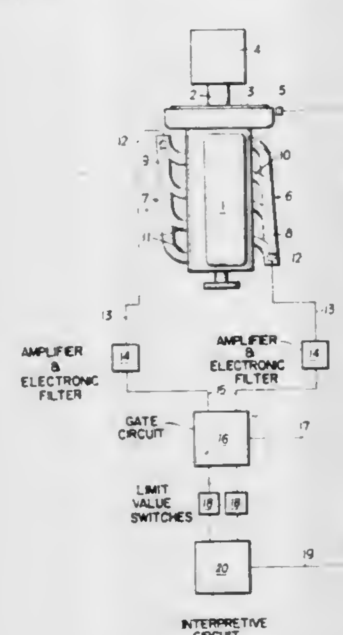

1. An operational testing device for inlet valves and outlet valves of reciprocating engines which are separately driven for an operational test, comprising at least one microphone disposed in the inlet pipe and at least one microphone disposed in the outlet pipe of the engine, combined amplifier and electronic filters to which said microphones are respectively connected, a gate circuit to which signals are forwarded from said combined amplifier and electronic filters, means supplying said gate circuit with crank angle signals from the engine, limit value switches connected to said gate circuit for the reception of the signals therefrom in a predetermined crank angle area, and an interpretive circuit connected to said switches for activation thereby when a certain, predetermined level is exceeded by the signals forwarded from said gate circuit, said means also supplying said interpretive circuit with crank angle signals from the engine, whereby said interpretive circuit allocates a signal received from said switches to one of said valves causing said received signal.

4,370,885

METHOD FOR CONTROLLING THE DISPERSING OF SOLIDS IN DRILLING MUD

Stanislav A. Alekhin, Chilanzar, kvartal 24, 53, kv. 89; Vitold M. Bakhir, proezd Gaidara, 7-A, kv. 17; Raisa I. Born, Chilanzar, kvartal 24, 53, kv. 89, and Tatyana M. Bakhir, proezd Gaidara, 7-A, kv. 17, all of Tashkent, U.S.S.R.

PCT No. PCT/SU79/00137, § 371 Date Sep. 16, 1980, § 102(e) Date Sep. 15, 1980, PCT Pub. No. WO80/01496, PCT Pub. Date Jul. 24, 1980

PCT Filed Dec. 29, 1979, Ser. No. 197,101

Claims priority, application U.S.S.R., Jan. 16, 1979, 2705513

Int. Cl.³ E21B *47/00*

U.S. Cl. 73—153 — 4 Claims

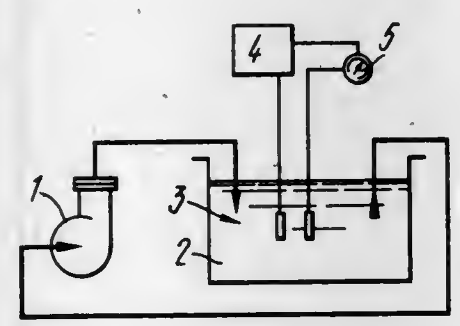

1. A method for controlling the dispersing of solids in drilling mud by measuring the concentration of particles, comprising determining the concentration of particles of the solid phase by continuously measuring the variation of the mud mineralization during the course of dispersing until a point is reached at which the mineralization value is stabilized, an increase in the mineralization value indicating an increase in the concentration of particles of the solid phase, and the stabilizing of the mineralization value indicating the maximum value of the concentration of particles of the solid phase, and discontinuing the dispersing of solids when said mineralization value is substantially stabilized.

4,370,886

IN SITU MEASUREMENT OF GAS CONTENT IN FORMATION FLUID

Harry D. Smith, Jr., Houston, and Carl Dodge, Alief, both of Tex., assignors to Halliburton Company, Duncan, Okla.

Filed Mar. 30, 1981, Ser. No. 248,162

Int. Cl.³ E21B *49/00*

U.S. Cl. 73—153 — 18 Claims

1. A method for the insitu measurement of gas content in formation fluid comprising:

(a) positioning a test chamber in a wellbore in proximity to a source of formation fluid;

(b) passing the formation fluid from the source through an expansion type valve into a test chamber;

(c) measuring the temperature of the formation fluid upstream and downstream of the expansion-type valve; and

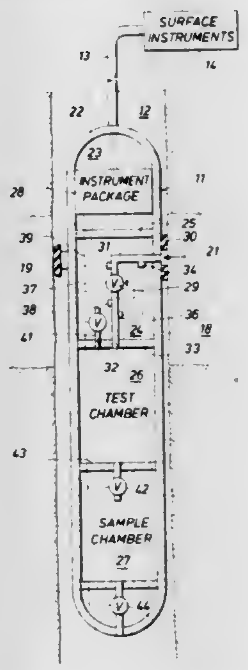

(d) the difference in said temperature measurements being an indicator of gas content in the formation fluid.

4,370,887

DEVICE FOR MEASURING THE MASS OF A FLOWING MEDIUM

Rudolf Sauer, Benningen, and Peter Romann, Stuttgart, both of Fed. Rep. of Germany, assignors to Robert Bosch GmbH, Stuttgart, Fed. Rep. of Germany

Filed Jan. 23, 1981, Ser. No. 227,866

Claims priority, application Fed. Rep. of Germany, Feb. 1, 1980, 3003671

Int. Cl.³ G01F *1/68*

U.S. Cl. 73—204 — 6 Claims

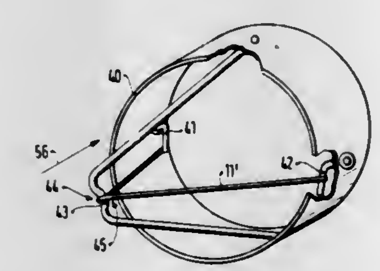

1. An apparatus for measuring the mass of a flowing medium, in particular for measuring the mass of air aspirated by an internal combustion engine, including at least one temperature-dependent resistor disposed in the flow of said medium, a characteristic of which resistor is controlled in accordance with the flowing mass as a control variable, said control variable forming a standard for measuring the mass of the flowing medium, characterized in that said temperature-dependent resistor is embodied as a hot element provided with three support points disposed in a sensor means, two of said support points disposed in a plane normal to the direction of flow so that said hot element is inclined relative to the flow of the medium at an angle to the vertical which is at least 45° but less than 90°.

4,370,888

VIBRATORY WEIGHING APPARATUS

Jakhin B. Popper, Kiryat Motzkin, Israel, assignor to Popper Engineering Co., Ltd., Haifa, Israel

Filed Nov. 13, 1980, Ser. No. 206,547

Claims priority, application Israel, Nov. 23, 1979, 58783

Int. Cl.³ G01G *3/16*

U.S. Cl. 73—580 — 4 Claims

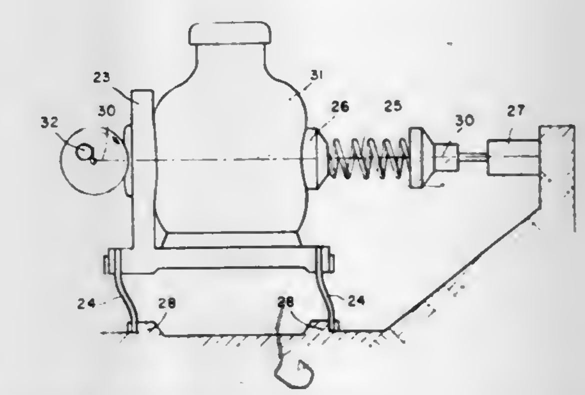

1. Weighing apparatus comprising:

means for applying force to a container partially filled with a liquid whereby force interactions between the liquid and the container are negligible for at least a predetermined measuring duration; and

means for sensing characteristics of the force applied to the container and of the motion of the container at said measuring duration for determining the tare weight of the container;

wherein said means for applying force comprises means for initially accelerating a container containing liquid and for subsequently terminating the acceleration and means for applying a braking force to the container following termination of the acceleration thereof; and wherein said sensing means comprises a first sensor for measuring said braking force and a second sensor for measuring deceleration of the container produced by the braking force.

4,370,889

TEST DEVICE FOR THE DETECTION AND ANALYSIS OF MATERIAL FAULTS

Klaus Ruthrof, and Rainer Meier, both of Erlangen, Fed. Rep. of Germany, assignors to Kraftwerk Union Aktiengesellschaft, Mülheim, Fed. Rep. of Germany

Filed Sep. 10, 1980, Ser. No. 185,750

Claims priority, application Fed. Rep. of Germany, Sep. 12, 1979, 2936882

Int. Cl.³ G01N *29/04*

U.S. Cl. 73—619 — 12 Claims

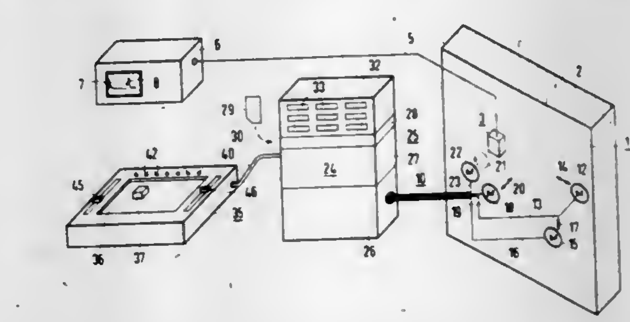

1. Test equipment for the detection and analysis of material faults in a test piece, comprising a test head, electrical remotely controlled manipulator means for moving said test head in at least two degrees of freedom, means connected to said test head for supplying said test head and evaluating signals thereof, display means connected to said test head for measuring test results thereof, means for providing said manipulator means with a testing program for automatically following a predetermined path at the surface of the test piece, an electronic transmission system connected to said manipulator

means, means connected to said electronic transmission system for simulating the test piece, and a remote controlled hand-operated guide element disposed adjacent to said display means in said simulating means for controlling said test head in correspondence to manual operation.

4,370,890
CAPACITIVE PRESSURE TRANSDUCER WITH ISOLATED SENSING DIAPHRAGM
Roger L. Frick, Eden Prairie, Minn., assignor to Rosemount Inc., Eden Prairie, Minn.
Filed Oct. 6, 1980, Ser. No. 194,758
Int. Cl.³ G01L *9/12*
U.S. Cl. 73—718 **24 Claims**

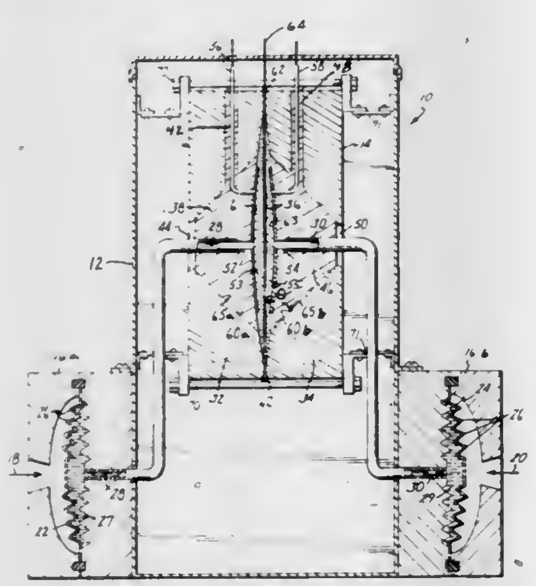

1. An improved capacitive pressure transducer having a transducer housing,
a sensor housing disposed in the transducer housing and having a central cavity,
diaphragm means supported on said sensor housing and extending across the central cavity to thereby divide the central cavity into two central chambers, said diaphragm means being deflectable under pressure and at least a portion thereof being conductive to provide a first plate of a variable sensor capacitor,
each of said chambers having a conductive surface portion spaced from the diaphragm for providing second plates of a pair of variable sensor capacitors,
a pair of isolators, said isolators each having an isolator chamber and an isolator diaphragm disposed therein,
separate passageway means coupling each isolator chamber to a separate central chamber,
means to permit applying separate pressures to the respective isolator diaphragms at a static line pressure, each isolator chamber, its associated passageway means and connected central chamber enclosing a substantially incompressible fluid such that the diaphragm means is urged to deflect and change the capacitance of the variable sensor capacitors responsive to the differential between the static line pressures applied to the isolator diaphragms,
means for physically supporting the isolators in a position spaced from the sensor housing, the sensor housing and the diaphragm means being constructed so that as the sensor housing warps under increasing static line pressure levels on the isolators, the stress on the diaphragm means correspondingly changes to reduce error in capacitance caused by changing static line pressure levels as the diaphragm means deflects in response to the same dfferential in static line pressures.

4,370,891
DUAL ELEMENT-SINGLE OSCILLATOR-RATIO TYPE DIGITAL TRANSDUCER
William Pickering, University Heights, Ohio, and David J. Urbanc, Peoria, Ill., assignors to Caterpillar Tractor Co., Peoria, Ill.
Filed May 26, 1981, Ser. No. 283,000
Int. Cl.³ G01L *19/04*
U.S. Cl. 73—861.03 **8 Claims**

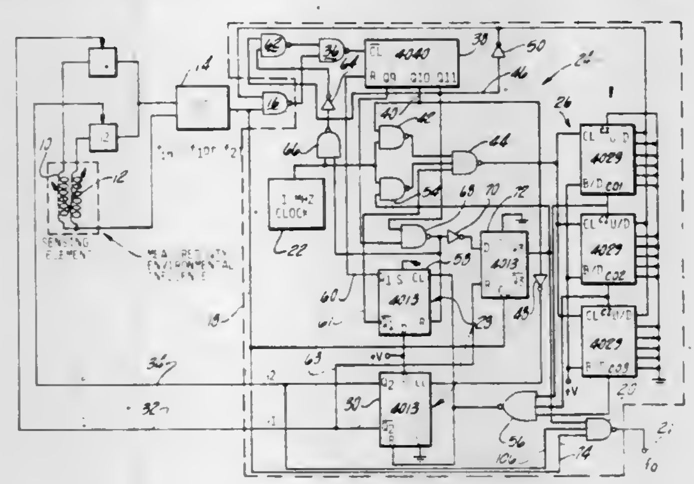

1. In a measuring system having a single signal generator (14) connected to first and second sensing elements (10, 12), said generator (14) being adapted to deliver one of first and second signals (f_1, f_2) each being responsive to one of the first and second sensing elements (10, 12), said sensing elements (10, 12) being adapted to sense at least one variable condition at respective first and second locations and deliver a respective signal to the generator (14) in response to said sensed condition, the improvement comprising:
first and second gates (G1, G2) each connected between a respective sensing element (10, 12) and the generator (14) and each being adapted to control the delivery of the respective sensing element signal to the generator; and
control means (18) for receiving the signals (f_1, f_2) from the generator (14) and sequentially operating the gates (G1, G2) in response to the period of one of the signals (f_1, f_2).

4,370,892
ELECTROMAGNETIC FLOWMETER HAVING NOISE SUPPRESSION NETWORK
Roy F. Schmoock, Yardley, Pa., assignor to Fischer & Porter Co., Warminster, Pa.
Filed Jul. 10, 1980, Ser. No. 168,452
Int. Cl.³ G01F *1/60*
U.S. Cl. 73—861.12 **9 Claims**

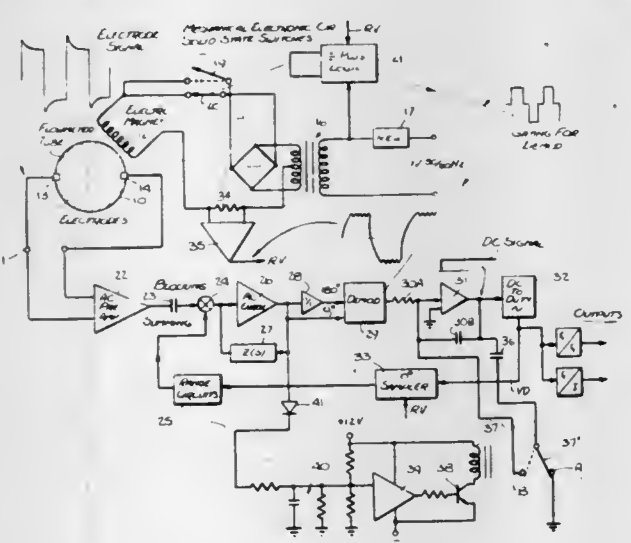

9. In a system in which a signal is produced which is accompanied by a noise component, a channel responsive to said signal to provide a useful output, said channel including a delayed action network and means that senses the signal and activates the network when the noise component thereof is excessive and persists for a predetermined period, activation of the network serving to extend the response time of the channel to thereby reduce the influence of the noise component to provide an output having a favorable signal-to-noise ratio.

4,370,893
ORIFICE METER WITH REPLACABLE ORIFICE DISC
Marvin G. Combes, Castro Valley, Calif., assignor to Grove Valve and Regulator Company, Oakland, Calif.
Filed Jun. 8, 1981, Ser. No. 271,637
Int. Cl.³ G01F *1/42*
U.S. Cl. 73—861.61 **6 Claims**

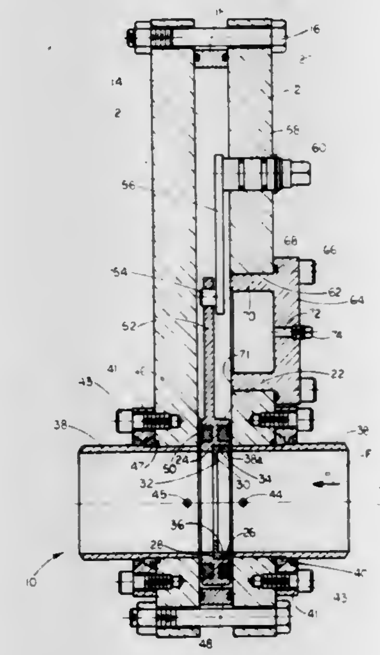

1. An orifice meter comprising:
gate valve type body construction including a pair of parallel, planar walls having aligned circular flow passages therethrough;
a movable carrier between said walls;
means for moving said carrier between a first position aligned with said flow passages and a second position displaced therefrom; and
annular seal means on both sides of said carrier of a diameter greater than said flow passages and operative to maintain sealing engagement with said planar walls;
said structure being characterized in that:
said carrier has an opening therethrough and a circular recess on one side thereof of a diameter greater than said flow passages but less than said seal means;
an orifice disc received in said recess;
a seal ring around said orifice disc;
an orifice replacement opening through one of said walls aligned with said second position, said opening being of a diameter greater than that of said orifice disc but less than that of said annular seal means; and
a closure member normally covering said replacement opening.

4,370,894
ECCENTRIC ELEMENT
Rune K. Sturesson, Golfbanevägen 31, Halmstad, Sweden (S-302 70)
PCT No. PCT/SE80/00179, § 371 Date Mar. 2, 1981, § 102(e) Date Mar. 2, 1981, PCT Pub. No. WO81/00123, PCT Pub. Date Jan. 22, 1981
PCT Filed Jun. 26, 1980, Ser. No. 243,966
Claims priority, application Sweden, Jul. 4, 1979, 7905870
Int. Cl.³ F16H *33/10*
U.S. Cl. 74—87 **8 Claims**

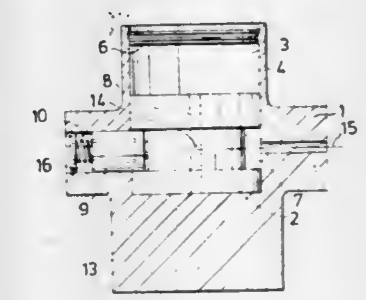

1. An eccentric element intended for ground vibrators, said element including a radially movable eccentric mass (2) arranged on a rotatable shaft (1), said mass being able to assume an inward position and as a result of the rotation of the shaft an outward position in which the distance between the centre of gravity (14) of the eccentric mass and the centreline (15) of the rotating shaft is larger than in the inward position, characterized in that the eccentric mass (2) is lockable in both its inward and outward position by the action of a displaceable locking piston (9) arranged in a recess (16) in the rotating shaft (1), and which can be manoeuvered to assume a position entirely thrust back into the recess (16) wherein the eccentric mass (2) is released, or a thrust-out position in which the locking piston (9) locks the eccentric mass (2) in its inward or outward position enabling the eccentric mass to be in its position independent of the speed of rotation of the shaft (1).

4,370,895
FRICTION DRIVE WHEELS
David M. Wright, Newcastle-upon-Tyne, England, assignor to British Gas Corporation, London, England
Filed Nov. 30, 1979, Ser. No. 98,823
Claims priority, application United Kingdom, Jan. 25, 1979, 7902618
Int. Cl.³ F16H *55/32;* **B60B** *15/00*
U.S. Cl. 74—216 **12 Claims**

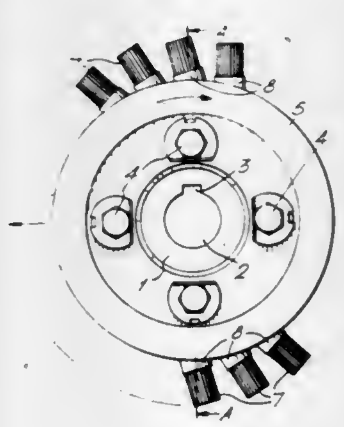

1. A friction drive wheel adapted to be mounted upon a pipeline inspection pig for continuous rotation about an axis perpendicular to the normal direction of movement of the pig as the latter moves longitudinally through a pipeline, said wheel being adapted to rotate with its circumferential periphery in frictional contact with the interior surface of the pipeline during said movement, said wheel having surface-engaging

means comprising a plurality of bristles mounted with their longitudinal axes arranged in one or more planes extending normally of the axis of rotation of the wheel and with said longitudinal axes inclined at an acute angle relative to a line extending perpendicularly through said axis of rotation.

4,370,896
REVERSING DEVICE FOR A GEAR TRANSMISSION
Udo Markfeld, and Siegfried Wintergerst, both of Friedrichshafen, Fed. Rep. of Germany, assignors to Zahnradfabrik Friedrichshafen AG, Friedrichshafen, Fed. Rep. of Germany
Filed Sep. 26, 1980, Ser. No. 191,023
Claims priority, application Fed. Rep. of Germany, Sep. 29, 1979, 2939713
Int. Cl.³ F16H *3/38;* **F16D** *23/06;* **B60K** *41/26*
U.S. Cl. 74—339 **11 Claims**

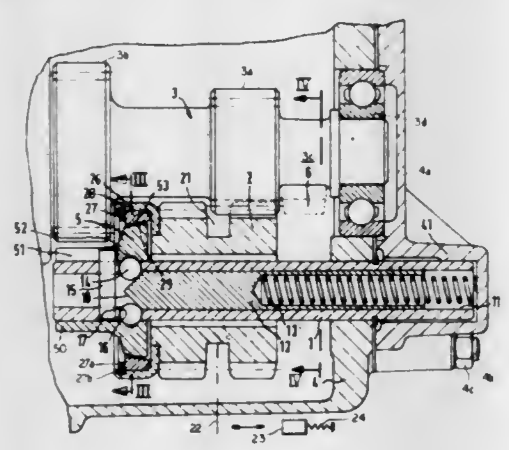

1. In a transmission having a housing, a drive train in said housing including a drive gear, a fixed shaft in said housing, an output shaft extending into said housing, a reversing gear connectible with said output shaft, and a sliding gear rotatable and axially shiftable on said fixed shaft and movable into and out of mesh with said reversing gear while continuously meshing with said drive gear, the improvement which comprises:
a synchronizing ring axially and rotationally fixed to said sliding gear;
a synchronizing member rotationally fixed to said fixed shaft but axially shiftable thereon and frictionally engageable with said retaining ring to brake rotation of said sliding gear;
detent means on said shaft impeding axial entrainment of said member with said ring upon movement of said sliding gear toward meshing engagement with said reversing gear; and
means for discontinuing frictional engagement between said ring and said member upon movement of said sliding gear into mesh with said reversing gear.

4,370,897
DUAL MODE SHIFTER FOR AUTOMATIC TRANSMISSIONS
Louis D. Carlo, Litchfield, Ohio, assignor to American Industries, Inc., Cleveland, Ohio
Filed Sep. 22, 1980, Ser. No. 189,430
Int. Cl.³ G05G *7/06, 9/06*
U.S. Cl. 74—475 **44 Claims**

1. A shifter for an automatic transmission comprising ratchet means operable to control said transmission through certain of its gears in a ratchet mode of operation and gate means operable to control said transmission through others of its gears in a gate mode of operation, said shifter further comprising a main frame and a handle, means to mount said handle on said main frame to permit said handle to control said ratchet means and said gate means and to move between controlling said ratchet means and said gate means, said ratchet means comprising ratchet teeth and a ratchet pawl, said ratchet pawl being mounted in link means, said link means being controlled by said handle means so that said pawl cooperates with said ratchet teeth when said shifter is operated in said ratchet mode, and said link means being operative to keep said pawl out of operative engagement with said ratchet teeth when said shifter is operated in said gate mode.

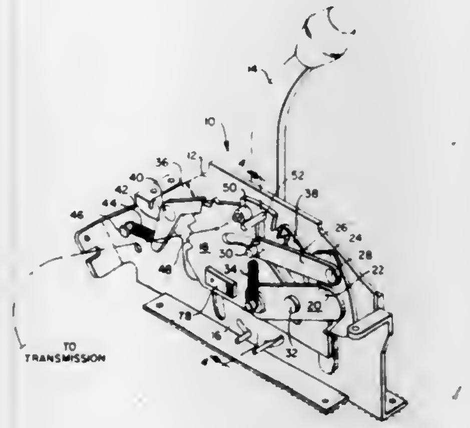

4,370,898
ADJUSTABLE FASTENING DEVICE
Katsuaki Maruyama, Toyota, Japan, assignor to Toyoto Jidosha Kogyo Kabushiki Kaisha, Aichi, Japan
Filed Aug. 20, 1980, Ser. No. 179,751
Claims priority, application Japan, Aug. 27, 1979, 54-118324[U]
Int. Cl.³ G05G *5/24;* **A47C** *7/38*
U.S. Cl. 74—540 **6 Claims**

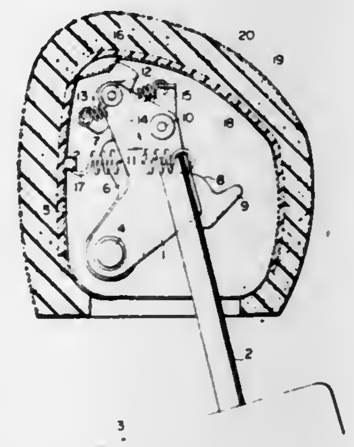

1. A device for adjustably fastening first and second relatively rotatable members to each other between first and second relative rotational positions, said device comprising a ratchet member fixed to said first member and having a plurality of ratchets arranged along an arc having its center at the pivoting axis of said first and second members, a pawl member movably supported by said second member and engaging said ratchets so as to allow said first member to rotate relative to said second member in a first direction toward said first relative rotational position but to prevent said first member to rotate relative to said second member in a second direction opposite to said first direction toward said second relative rotational position, a pawl disengaging means which removes said pawl member from engagement with said ratchets when said first and second members have been brought to said first relative rotational position, a control member which engages said pawl member so as to hold said pawl member as disengaged from said ratchets until said first and second members are brought to said second relative rotational position wherein said control member is a hook-like member pivotably supported by said second member having an edge portion, said pawl member has an edge portion adapted to engage said edge portion of said control member when said pawl member has been disengaged from said ratchets by said pawl disengaging means, a spring mounted between said pawl member and said control member, said spring biasing said pawl member so as to resiliently drive said pawl member toward engagement with said ratchets while said spring also biases said control member so as to resiliently drive said edge portion of said control member toward engagement with said edge portion of said pawl member, and a control releasing means which releases said control member from said pawl member when said first and second members have been brought to said second relative rotational position so that said pawl member again engages said ratchets.

4,370,899
FLYWHEEL FOR KINETIC ENERGY STORAGE
Bruce E. Swartout, San Juan Capistrano, Calif., assignor to U.S. Flywheels, Inc., Irvine, Calif.
Division of Ser. No. 942,112, Sep. 13, 1978, Pat. No. 4,285,251. This application Jul. 21, 1980, Ser. No. 170,463
Int. Cl.³ G05G *1/00*
U.S. Cl. 74—572 **3 Claims**

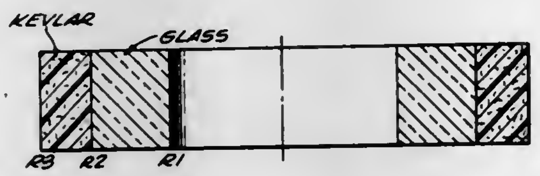

1. A flywheel for storing kinetic energy and comprising:
a double spider configuration hub having a pair of coaxial, oppositely facing, spaced-apart convex surfaces of substantially equal dimensions, said surfaces being interconnected by a plurality of legs spaced equidistantly around the perimeter of said hub; and
each of said legs having a circumferential outward facing surface for support of a cylindrical flywheel rim, the axis of which is collinear with the axes of said convex surfaces;
a unitary, thick rim, concentrically supported on said leg surfaces and having a first combination on fiber and epoxy matrix wound onto a substantially cylindrical configuration having an inner radius R1 and an outer radius R2 and
a second combination of fiber and epoxy matrix wound into a substantially cylindrical configuration having an inner radius R2 and an outer radius R3;
the mass density per unit volume of said first combination being greater than the mass density per unit volume of said second combination; and
the elastic modulus of said second combination being greater than the elastic modulus of said first combination.

4,370,900
TORSIONAL OSCILLATION DAMPER FOR COMBUSTION-ENGINE CRANKSHAFT
Helmut Hartz, Hedwigstr. 24, 4690 Herne, Fed. Rep. of Germany
Filed May 16, 1980, Ser. No. 150,357
Claims priority, application Fed. Rep. of Germany, May 18, 1979, 2920125
Int. Cl.³ F16F *15/10*
U.S. Cl. 74—574 **5 Claims**

3. A torsional oscillation damper comprising:
a relatively light annular disk centered on and rotatable about an axis;
a rigid abutment disk centered on and rotatable about said axis, said abutment disk being spaced axially from said light disk;
a relatively heavy annular disk centered on and rotatable about said axis independently of at least one of said light and abutment disks, said abutment disk being fixed axially and rotationally to one of said light and heavy disks;
an annular soft elastomeric ring engaged between said light and heavy disks;
a ring of friction material engaged axially between said abutment disk and one of said light and heavy disks; and
spring means for urging said ring of friction material axially against one of the respective disks it engages axially and for rotationally coupling said ring of friction material to the other respective disk it engages axially, said spring means including:

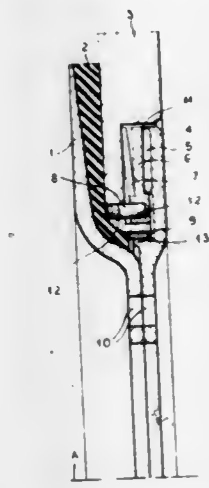

a pressure ring rotationally linked to said other disk and to said ring of friction material and axially displaceable relative to said disks, said other disk and said pressure ring being formed with respective axially aligned holes,
at least one spring between said pressure ring and said other disk, and
respective pins each extending axially through a respective one of the holes of said other disk and the respective hole of said pressure ring.

4,370,901
CONNECTING ROD WITH VARIABLE LENGTH
Ralph A. Bolen, London, Ohio, assignor to John Sawyer, Cincinnati, Ohio
Filed Jan. 5, 1981, Ser. No. 222,327
Int. Cl.³ G05G *3/00;* **F02B** *75/04*
U.S. Cl. 74—586 **21 Claims**

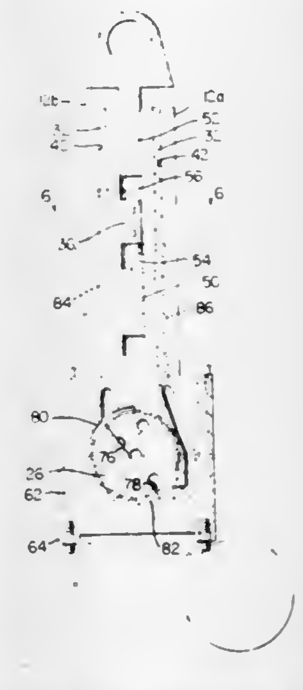

1. An extendable piston rod, comprising:
(a) a housing, said housing being rotatably attachable to a crankshaft;
(b) a connecting rod including:
(i) a first portion rigidly attached to said housing; and

(ii) a second portion movably interconnected to said first portion;

(c) a first variable volume chamber interposed between said first and second portions of said rod, one end of said first variable volume chamber being rigidly affixed to said first portion of said rod and the other end being rigidly affixed to the second portion but movable relative to said first portion, said first variable volume chamber having an increasing volume as said second portion of said rod is moved relative to said first portion in a predetermined direction and a decreasing volume as said second portion of said rod is moved relative to said first portion in a direction opposite said predetermined direction;

(d) a second variable volume chamber interposed between the first and second portions of said rod, one end of said second variable volume chamber being rigidly affixed to said first portion of said rod and the other end being rigidly affixed to said second portion but movable relative to said first portion, said second variable volume chamber having an increasing volume as said second portion of said rod is moved relative to said first portion in a direction opposite said predetermined direction and a decreasing volume as said second portion of said rod is moved relative to said first portion in said predetermined direction; and

(e) means for alternately providing selective fluid communication between each of said variable volume chambers and a pressurized fluid source while simultaneously providing fluid communication between the other of said variable chambers and a fluid exhaust in accordance to the relative angular position of the housing to a crankshaft.

4,370,902
DRIVE MECHANISMS, MORE PARTICULARLY FOR VALVE ACTUATORS

Jeremy J. Fry, and Peter R. Smith, both of Lower Weston, England, assignors to Rotork Controls Limited, Bath, England
Filed Sep. 25, 1980, Ser. No. 190,879
Claims priority, application United Kingdom, Sep. 28, 1979, 7933691
Int. Cl.^{3} F16H *35/00*
U.S. Cl. 74—625 **8 Claims**

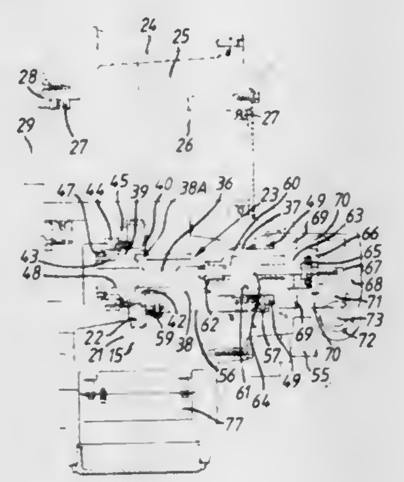

1. A motorised actuator comprising a driven shaft, a motor for driving said driven shaft, an output shaft, and an intermediate shaft assembly, said motor driven shaft being drivably connected with the shaft of said intermediate shaft assembly by a wormgear mesh comprising a worm on said motor driven shaft and a wormwheel on said intermediate shaft, a pinion member slidably mounted on said intermediate shaft and formed with a plurality of elongated teeth at all times in driving engagement with an output gear on said output shaft, a plurality of recesses formed in said wormwheel, said pinion member being slidably relative to said output gear for drivably engaging the teeth of said pinion member with the recesses in said wormwheel, and a clutching mechanism for selectively moving said pinion member slidably into and out of driving engagement with said wormwheel so as to permit independent operation of said intermediate shaft assembly and thereby said output shaft by manual means, characterized in that the ends of selected teeth on said pinion member are extended for engagement with the recesses in said wormwheel, and that the width of each recess is substantially larger than the width of the extended teeth of said pinion member.

4,370,903
METHOD AND APPARATUS FOR COMPUTING MOTOR SPEEDS FOR INITIATING AND ENDING JOLT CONTROL DURING GEARSHIFT IN A DRIVE SYSTEM USING FLUID COUPLINGS OR TORQUE CONVERTERS

Walter Stroh, Cleebronn, and Manfred Schwab, Gerlingen, both of Fed. Rep. of Germany, assignors to Robert Bosch GmbH, Stuttgart, Fed. Rep. of Germany
Filed Jul. 18, 1980, Ser. No. 170,130
Claims priority, application Fed. Rep. of Germany, Aug. 25, 1979, 2934477
Int. Cl.^{3} B60K *41/08*
U.S. Cl. 74—858 **11 Claims**

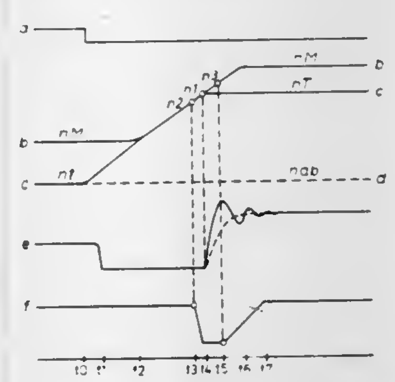

9. In a drive system having a motor, hydraulic coupling means driven by said motor, automatic transmission means driven by said hydraulic coupling means and operable in a plurality of selectable gear ratios, and means for furnishing a first signal indicative of the output speed (nab) of said automatic transmission means a second signal indicative of the then-engaged gear and a third signal indicative of initiation of a gearshift, the improvement comprising

apparatus for furnishing a fourth and fifth signal respectively initiating and ending an externally controlled reduction of output torque of said motor for decreasing jolts during a gearshift, comprising

first computing means (1) having speed ratios corresponding to each of said selectable gear ratios stored therein, for multiplying said first signal by a selected one of said speed ratios, thereby creating a synchronous speed signal;

second computing means (2) connected to said first computing means for computing a first and second (n2, n3) desired motor speed signal in dependence upon said synchronous speed signal and a first and second speed increment signal (Δ1n, Δ2n); and

means (3) for furnishing said fourth and fifth signals when the speed of said motor is equal to said first and second desired motor speeds, respectively.

4,370,904
METHOD AND APPARATUS FOR CONTROLLING THE TORQUE OF AN INTERNAL COMBUSTION ENGINE

Alfred Müller, Leonberg; Manfred Schwab, Gerlingen, and Walter Stroh, Cleebronn, all of Fed. Rep. of Germany, assignors to Robert Bosch GmbH, Stuttgart, Fed. Rep. of Germany
Filed May 7, 1981, Ser. No. 261,569
Claims priority, application Fed. Rep. of Germany, May 10, 1980, 3018033
Int. Cl.^{3} B60K *41/08*
U.S. Cl. 74—858 **8 Claims**

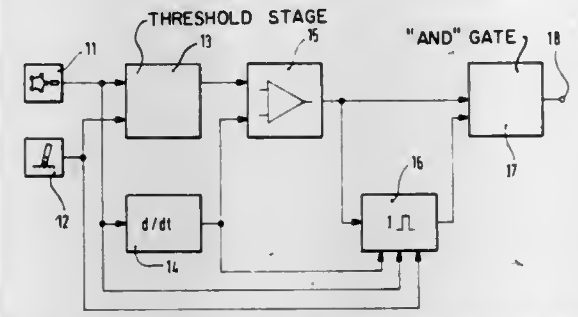

1. In an internal combustion engine having an automatic transmission and means for decreasing the output torque of said engine in response to a torque reducing signal;

apparatus for generating said torque reducing signal whenever a gear-shifting operation of said automatic transmission takes place, comprising

first means (11,14) for generating a deceleration signal corresponding to the rate of decreases with respect to time of the speed of said internal combustion engine; and

second means (11,12,13) for generating a reference deceleration signal value representative of a threshold below which the value of deceleration is too low to correspond to the occurrence or imminence of a gear-shifting operation of said transmission;

third means (15,16,17) connected to said first and second means for furnishing said torque reducing signal when said deceleration signal is indicative of an engine deceleration exceeding said reference deceleration signal value.

4,370,905
CHAIN TOOTH LOCATOR

Jack F. Simington, Star Rte., Box 141, Chiloquin, Oreg. 97624
Filed Jul. 15, 1980, Ser. No. 168,357
Int. Cl.^{3} B23D *63/16*
U.S. Cl. 76—74 **9 Claims**

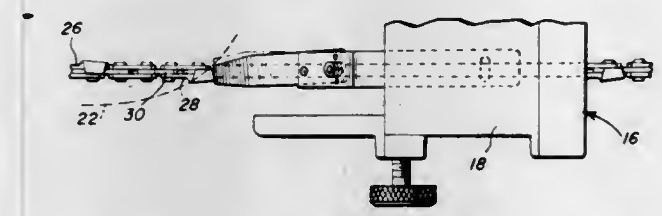

1. In combination with a support structure defining an elongated guide groove for slidingly receiving, guidingly engaging and supporting the guide lugs of an elongated saw chain section for selective positioning of the chain section along the groove, a tooth locator for engaging successive tooth equipped links of the chain section and positioning the links in predetermined position along the groove to be similarly engaged and sharpened by a rotary grinding wheel mounted for guided movement in a predetermined path relative to said support structure, said tooth locator including a mount supported from said support structure, said tooth locator including an elongated support arm having one end supported from said mount, an elongated finger, mounting means pivotally mounting one end of said finger from the other end of said arm for limited angular displacement of said finer relative to said arm about an axis at least closely adjacent and generally paralleling a plane containing said groove and paralleling the direction in which said groove opens, said finger being displaceable relative to said arm between positions slightly oppositely inclined relative to said plane, said arm and said finger including coacting detent means operative to releasably retain said finger in each of said oppositely inclined positions.

4,370,906
SEQUENCED FASTENER INSTALLATION SYSTEM

Raymond A. Gurries, Reno, Nev., assignor to Resonant Technology Company, Sparks, Nev.
Filed May 5, 1980, Ser. No. 146,809
Int. Cl.^{3} B25B *19/00*
U.S. Cl. 81—464 **11 Claims**

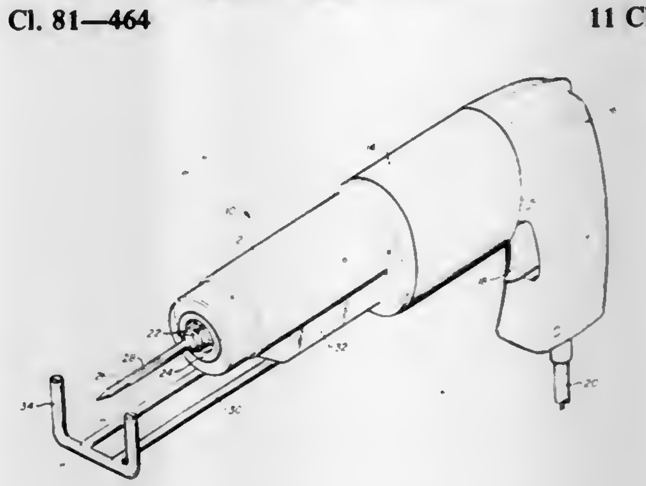

1. Apparatus for installing an elongate fastener which is at least partially threaded in a workpiece, said apparatus comprising:

a mass reciprocatable along a linear path;

means for resiliently mounting the mass so that the mass is reciprocatable at a resonant frequency;

means for exciting the mass so that the mass reciprocates at at least near its resonant frequency;

a chuck having a front portion adapted to releasably support the fastener and a back striking surface;

means for locating the chuck so that the reciprocating mass intermittently impacts the back striking surface of the chuck to drive the fastener into the workpiece so that the threaded portion of the fastener at least partially engages the workpiece;

means for rotating the front portion of the chuck after the fastener is driven partially into the workpiece to correspondingly rotate the fastener and complete the installation of the fastener in the workpiece; and

a control rod projecting forwardly from the locating means, said control rod being movable along an axis parallel to the linear path and having a forward end adapted to engage the workpiece so that movement of the locating means toward the workpiece moves the control rod, and a plurality of switches to activate by movement of the control rod to activate and de-activate the exciting means in sequence.

4,370,907
POSITIVE STOP CENTER

Leo C. Felice, P.O. Box 904, Woonsocket, R.I. 02895
Filed Nov. 5, 1980, Ser. No. 204,335
Int. Cl.^{3} B23B *23/02*
U.S. Cl. 82—33 R **3 Claims**

1. A system for accurately positioning and locating a workpiece in a machine tool, said system being employed at the headstock spindle of the machine tool, comprising:

a master sleeve shaped for frictional engagement by said headstock spindle, and having a tapered cavity therein;

an interchangeable center housing shaped for frictional engagement with, and quick release from, the walls of said cavity, having a shoulder against which said workpiece

rests when located and positioned in said machine tool, and having a passage therethrough;

removable securing means forming a mechanical seal at one end of said passage;

a center pin slidably mounted within said passage, a first end of said pin projectable out of said housing and said passage and beyond said shoulder, for engagement with the center hole at one end of said workpiece; and

spring means located in said passage, one end of said spring means being positioned against said securing means, the other end being in contact with the second end of said

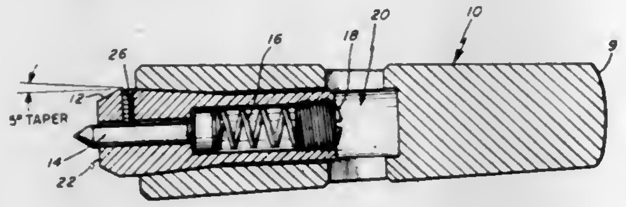

center pin, for urging the first end of said center pin into a position normally extended beyond said shoulder, said spring means being compressible when the workpiece is positioned and located on the center pin at the headstock of the machine tool;

wherein said passage includes an enlarged chamber, the second end of said center pin comprises an enlarged head projecting into said chamber, said securing means forms the innermost wall of said chamber, and said enlarged head is pushed against the opposite wall of said chamber by said spring means when the center pin is in normal position.

4,370,908

CUTTING HEAD FOR FILTER ASSEMBLER

Michael E. DeAlto; Joseph D. DiGiacomo; Clifford R. Marritt, all of Richmond, Va., and Edward G. Preston, London, England, assignors to Molins Limited, London, England

Filed Apr. 7, 1980, Ser. No. 138,092

Claims priority, application United Kingdom, Apr. 5, 1979, 7912075

Int. Cl.³ B23D *25/02, 35/00*

U.S. Cl. 83—348 **5 Claims**

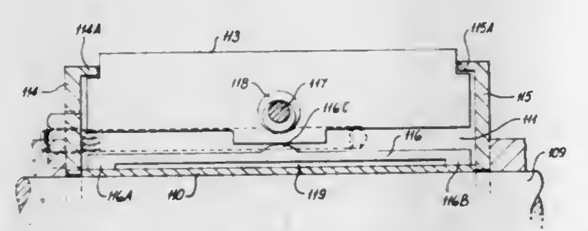

1. A cutting head for a filter attachment machine comprising a drum carrying a plurality of knives each of which is urged radially outwards by at least one spring against an adjustable retaining device which limits radially-outward movement of the corresponding knife and includes adjustment means for adjusting the outer limiting portion of the knife, said spring comprising a resilient beam which extends along a radially-inner face of the knife and is resiliently flexed, and is arranged to engage the knife so as to urge it radially outwards, and further including a central fulcrum about which each knife can pivot with respect to the cutting head.

4,370,909

HAND GUARD FOR TABLE MOUNTED CUTTING TOOL

G. Craig Jennings, 2225 Laguna Canyon Rd., Laguna Beach, Calif. 92651

Filed Mar. 6, 1981, Ser. No. 241,244

Int. Cl.³ B27B *25/10*

U.S. Cl. 83—437 **5 Claims**

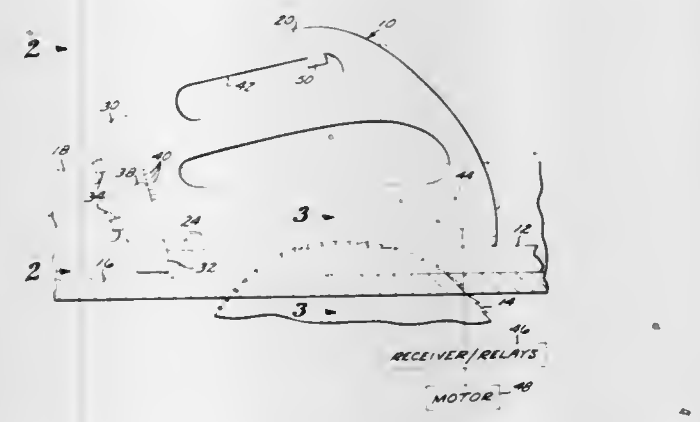

1. A hand guard for a table mounted rotating cutting tool, said hand guard comprising:

a vertically oriented guide body having flat side portions for slidable engagement with a table mounted guide rail of predetermined height, and including an underside adapted to rest on top of work to be advanced past a rotating cutting tool and along a path parallel to said guide rail, said guide body further having an elongated hand slot extending through said flat side portions and sloping upwardly in a leading direction whereby said guide body can be manually thrust in said leading direction with a vector of said thrust tending to press said guide body downwardly upon said work, said hand slot being adapted for location above said predetermined height of the guide rail whereby a user's hand will clear the upper edge of said guide rail;

a heel mounted to the trailing extremity of said guide body for generally vertical movement to project the lower extremity of said heel below said guide body underside for positive engagement with the edge of said work whereby said work may be moved past said cutting tool by manually grasping the upper portion of said guide body and moving it toward said cutting tool, said lower extremity of said heel including a channel to accommodate a cutting tool passing upwardly of said underside of said guide body during ripping of said work; and

adjustment means on said heel and said guide body cooperative to fix said heel in one of various vertically adjusted positions relative to said guide body to accommodate various thicknesses of work.

4,370,910

METHOD AND APPARATUS FOR CUTTING METAL PIECES INTO NARROWER WIDTHS

Yasuo Suzuki; Shuji Nagata, and Kazumi Yasuda, all of Kitakyushu, Japan, assignors to Nippon Steel Corporation, Tokyo, Japan

Filed Dec. 30, 1980, Ser. No. 221,413

Int. Cl.³ B23D *19/06*

U.S. Cl. 83—876 **2 Claims**

1. An apparatus for cutting a relatively hot metal piece having a rectangular cross-section into three or more narrower widths by cutting through the thickness of said metal piece, which apparatus comprises: a knifing roll stand having a pair of rotatable knifing rolls, one placed above the other, each knifing roll having a plurality of annular wedges therearound and spaced from each other along the roll in the direction of the axis thereof, there being two of said wedges which are outer wedges, being closer to the respective ends of said roll, the flanks of said outer wedges being at an angle to a plane through

the wedges and perpendicular to the axis of said knifing roll, the angle of the flank of the flanks of each of said outer wedges which is toward the roll end being an angle θ_1 which is greater than the angle θ_2 of the opposite flank of said outer wedges, the angle α of said outer wedges which is the sum of the angle θ_1 and the angle θ_2 being between 30 and 90 degrees, and the flank angle θ_1 being equal to 0.52α to 0.92α, and the pointed end of each outer wedge being flattened and having a width ϵ equal to 0.01H to 0.04H, where H is the maximum thickness of

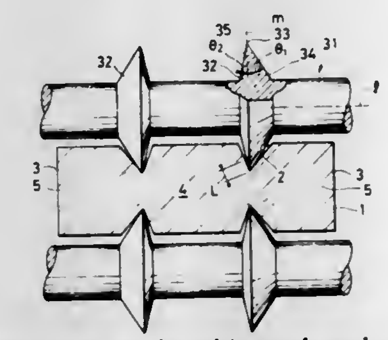

the metal piece to be cut in said stand, and means at the entry and exit sides of the knifing roll stand for transferring a metal piece to be cut through the stand in the longitudinal direction of the piece, whereby sufficient metal in the outermost cut widths and adjacent the cuts between the outermost cut widths and the next adjacent inner cut widths being caused to flow in the direction of the length of the cut widths to substantially eliminate the curvature in the direction of the width of the cut widths when the cut widths are rolled to rectangular cross-sectional shapes.

4,370,911

POINTLESS END PIN ADAPTOR FOR THE VIOLONCELLO AND THE STRING BASS

Richard Goldner, 3717 Toad Lake Rd., Bellingham, Wash. 98226

Continuation-in-part of Ser. No. 225,845, Jan. 16, 1981. This application Jan. 27, 1982, Ser. No. 343,232

Int. Cl.³ G10G *5/00*

U.S. Cl. 84—280 **6 Claims**

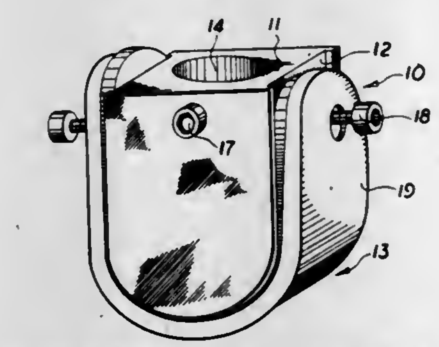

1. An end pin adaptor for the violoncello and the string bass comprising a receiving member having an arcuate support portion at one of its ends and a cavity opening at its other end adapted to receive the end pin of a violoncello or string bass, a locking means adjustably positioned on said receiving member to lock said member to an end pin positioned in said cavity and at least one flexible overlay positioned over said arcuate support portion of the receiving member.

4,370,912

SOUND PRODUCING INSTRUMENT

Christopher Glynn, 22 Brookwood Rd., Artane, Dublin, Ireland

Filed Mar. 16, 1981, Ser. No. 244,113

Int. Cl.³ G10D *13/06*

U.S. Cl. 84—418 **13 Claims**

1. In combination,

(1) a musical percussion instrument comprising:

(a) a staff having a central portion, an upper end portion, and a lower end portion,

(b) a plurality of pins supported at the upper end portion of the staff, and

(c) a plurality of sound producing elements supported on each pin, and

(2) a toothed rod for drawing across said central portion of the staff so that successive teeth on the rod impart to the staff a succession of impacts;

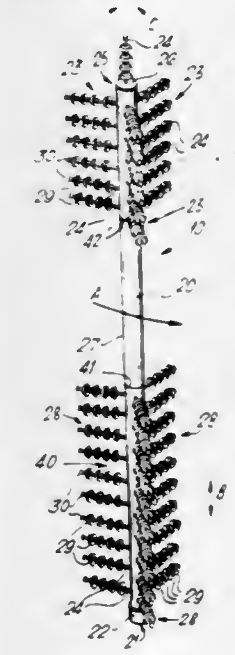

the instrument being capable of producing three different beats, each beat being independent of each other beat, the first beat being produced by striking the lower end portion of the staff rythmically against the ground whilst the staff is held generally vertically, the second beat being produced by oscillating the upper end portion of the staff about its vertical axis, and the third beat being produced by drawing the toothed rod across the central portion of the staff, the instrument also being capable of producing any combination of two said beats simultaneously, or all three beats simultaneously.

4,370,913

AMMUNITION HANDLING SYSTEM

George T. Gough, Newcastle, England, assignor to Gough & Co. (Hanley) Ltd., Staffordshire, England

Filed Sep. 22, 1980, Ser. No. 189,041

Claims priority, application United Kingdom, Jun. 2, 1980, 8017981

Int. Cl.³ F42B *33/00*

U.S. Cl. 86—45 **5 Claims**

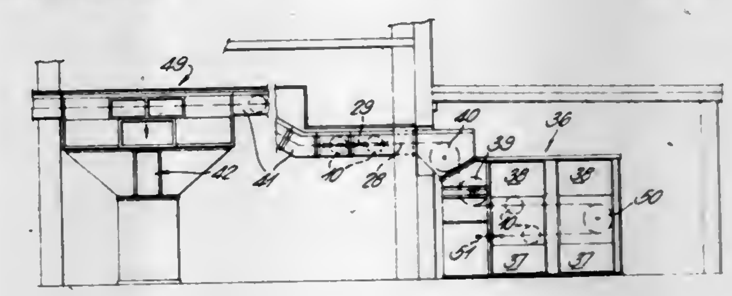

1. An ammunition handling system comprising a carrier for holding ammunition, conveyor means connected to said carrier for moving said carrier and thus conveying ammunition along a predetermined path, cooperating means on said carrier and along said path for arresting and holding said carrier level during a loading operation and an automatic tipping mechanism for engaging said carrier to cause said carrier to revolve slowly and thus gently discharge the ammunition at a selected point along said path, said carrier including an inner liner assembly contoured to receive ammunition in a first orientation

of said carrier for smoothly and gently discharging ammunition when said carrier is tipped from said first orientation, said inner liner assembly having a shape defining means for receiving and holding an open top ammunition box while allowing the contents of such ammunition box to individually discharge when the carrier is tipped.

4,370,914
AIMING ARRANGEMENTS

Roger Voles, London, England, assignor to E M I Limited, Hayes, England
Filed Apr. 6, 1978, Ser. No. 895,488
Claims priority, application United Kingdom, Apr. 7, 1977, 14729/77
Int. Cl.³ F41G *1/00*
U.S. Cl. 89—41 TV **19 Claims**

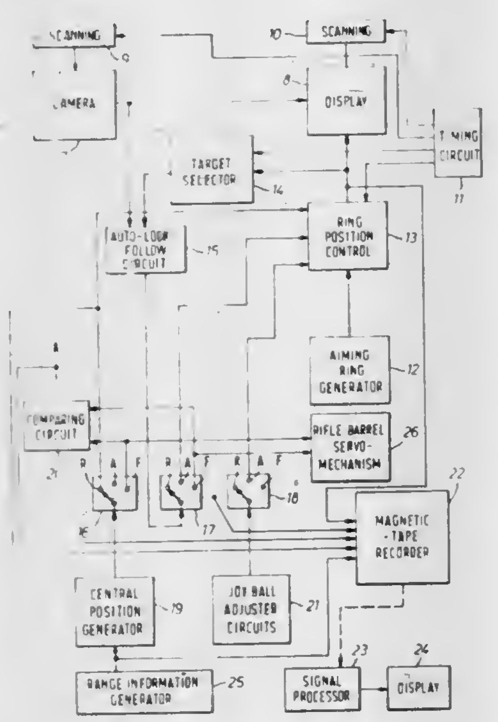

1. A gun aiming arrangement comprising:
(a) camera means for receiving an image of a target area and adapted to sample the image to produce signals representing the image;
(b) means for indicating the target area to an operator;
(c) an auto-lock-follow circuit,
(d) a target selecting means for rendering the auto-lock-follow circuit preferentially sensitive to a selected zone of the area;
(e) manually operable means for causing the selecting means to select the said zone of the area;
the auto-lock-follow circuit being connected to receive the signals from the camera and means being connected to the selecting means to respond to the said signals and the selected zone to indicate the position of the said zone in the target area;
(f) means responsive to the auto-lock-follow circuit to produce a firing signal for firing the gun when the deviation of the indicated position from the aim of the gun has a predetermined characteristic; and
(g) manually operable switching means for selectively connecting the auto-lock-follow circuit to the firing signal producing means.

4,370,915
TOOTH FOR RAMMING UNIT

Olle Gustavsson, and Göran Sundmar, both of Karlskoga, Sweden, assignors to Aktiebolaget Bofors, Bofors, Sweden
Filed Dec. 18, 1980, Ser. No. 217,636
Claims priority, application Sweden, Dec. 18, 1979, 7910438
Int. Cl.³ F41F *9/00*
U.S. Cl. 89—47 **9 Claims**

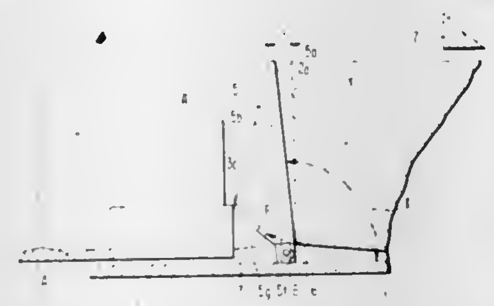

1. In a ramming unit for an artillery piece, an improved mechanism for displacing a shell from a loading tray and permitting a charge to be loaded behind said shell comprising:
a journal for supporting a tooth member to a table of said ramming unit;
a tooth member formed as a trough carrying a welt, connected to said journal, said tooth member being swingable from a vertical position for engaging said shell to a horizontal position for engaging said charge, said tooth member having a forward surface facing said shell rear surface during its vertical position which contacts said shell at a lower portion thereof, and forms an acute angle with said shell, said tooth member having a second surface forming an acute angle with said forward surface at said journal and extending rearward thereof, said second surface including first and second force relieving surfaces;
third and fourth relieving surfaces on a movable ram unit for engaging said second surface first and second force relieving surfaces, whereby forward motion of said movable ram applies a force to said tooth member for forcing said shell into said artillery piece; and
said tooth member in said horizontal position permitting said charge to be received in said trough and engaged by a welt in said trough, whereby said charge is withdrawn in response to movement by said movable ram to a preferred location for firing.

4,370,916
PERCUSSIVE DEVICE

Leonid A. Mitin, Morskoi prospekt, 62, kv. 12; Vladislav V. Mitrofanov, Morskoi prospekt, 19, kv. 11; Vladimir Y. Fadeev, ulitsa Tereshkovoi, 6, kv. 180; Petr Y. Fadeev, ulitsa Russkaya, 25, kv. 204; Vladlen V. Korobkov, ulitsa Shljuzovaya, 12, kv. 17; Rim A. Kulagin, ulitsa Tereshkovoi, 2, kv. 22; Anatoly A. Vorozheikin, ulitsa Tereshkovoi, 24, kv. 8; Nikolai P. Ermilov, ulitsa Rossiiskaya, 12, kv. 56; Jury V. Smirnov, ulitsa Ekvatornaya, 1, kv. 170, and Ivan A. Besedin, ulitsa Tereshkovoi, 12, kv. 91, all of Novosibirsk, U.S.S.R.
Filed Oct. 4, 1979, Ser. No. 81,915
Int. Cl.³ F03C *1/04;* **F01L** *19/02;* **F04B** *1/00*
U.S. Cl. 91—173 **5 Claims**

1. A percussive device for transmitting impact pulses, which device comprises:
a housing; a striker having a tail portion, said striker being reciprocatingly supported in said housing and operative to transmit impact impulses to a medium being worked; a power cylinder connected to said housing and accommodating during reciprocation, said tail portion of the striker; means for introducing into said power cylinder a fluid medium under pressure, which fluid medium being capable of storing potential energy when compressed during a backward stroke of said striker and acting upon the end of said striker tail portion during a forward stroke of said striker; an arresting mechanism including means for interacting with said striker during its backward stroke; a striker backward-stroke drive comprising hydraulic cylinders separate from said housing and said power cylinder and spaced radially outward from the axis of said striker, each hydraulic cylinder having an opening formed therein in communication with the power cylinder, a rod in each hydraulic cylinder connected to said arresting mechanism,

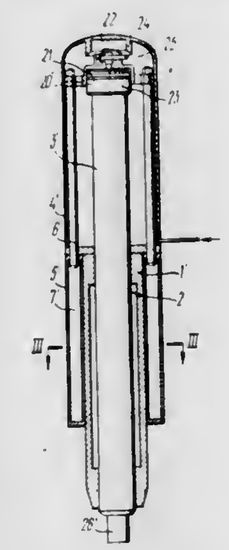

the relationship between the opening in each hydraulic cylinder, the rods, and the power cylinder being such that said rods move said arresting mechanism into engagement with said striker under the pressure of the fluid medium, each of said hydraulic cylinders being selectively connectable with a pressure source and a pressure medium exhaust line, connection of said hydraulic cylinders with the pressure source effecting a backward stroke of said arresting mechanism jointly with said striker.

4,370,917
PISTON-RACK ROTARY ACTUATOR

Alan D. Bunyard, 46, Sunnydale Ave., Patcham, Brighton, East Sussex, England
Filed Jul. 8, 1980, Ser. No. 166,773
Claims priority, application United Kingdom, Jul. 14, 1979, 7924621
Int. Cl.³ F01B *1/06, 7/04*
U.S. Cl. 91—491 **16 Claims**

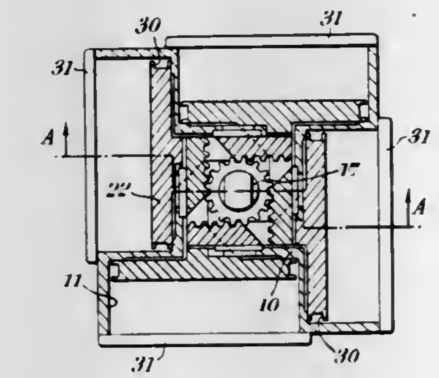

1. A piston-rack rotary actuator comprising a body (10) in which an output shaft (13) is supported for angular movements about its axis of rotation, wherein said shaft has a gear (16) intermediately of its ends, wherein pistons (22) having integral toothed racks (24) in mesh with said gear (16) are displaceable along the respective cylinders (11) in said body (10) under the influence of a pressurized fluid medium with resultant angular movement of the output shaft (13) about its axis of rotation;
characterized in;
that there are four pistons (22) arranged in serial order circumferentially around said gear each of which is accommodated in a respective one of four cylinders (11);
said pistons and said cylinders being arranged in two opposite pairs with respect to said gear and said pistons being arranged for simultaneous displacement radially of said gear along their said respective cylinders under the influence of said pressurized fluid medium;
that each one of the integral toothed racks (24) of said pistons meshes respectively with one portion of one of two sets of diametrically opposed teeth on said gear (16); and
that pressurized fluid medium supply means (33 to 37) are provided to facilitate the supply of said medium to corresponding one or other faces of said pistons (22) simultaneously in order to move said pistons to simultaneously drive said gear while said pistons are moving in four different directions.

4,370,918
FLUID CYLINDER ASSEMBLY

William L. Pringle, 999 Lake Shore Rd., Grosse Pointe Shores, Mich. 48236
Filed Mar. 24, 1980, Ser. No. 132,716
Int. Cl.³ F16J *9/00*
U.S. Cl. 92—163 **13 Claims**

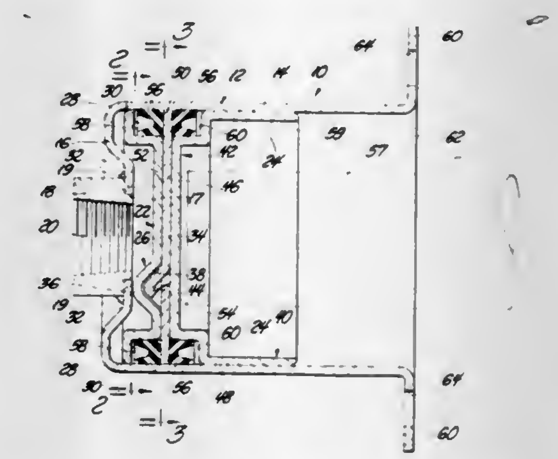

1. A fluid cylinder assembly (10) comprising, a cylinder housing (12) including a cylindrical wall portion (14) and a closed end portion (16) having fluid inlet means (18) for receiving a supply of fluid therethrough, a piston assembly including a pressure wall (22) facing said closed end portion (16) and side walls (24) for sliding engagement within said cylindrical wall portion (14) of said cylinder housing (12), characterized by said pressure wall (22) including first projection means (26) extending from said pressure wall (22) for abutting said closed end portion (16) of said cylinder housing (12) so as to prevent said piston assembly from completely engaging said closed end portion (16), said piston assembly including an end piece member (34) defining said pressure wall (22), said first projection means (26) including at least one integral male portion (36) extending from one surface of said end piece member (34) and defining a female portion (38) on the opposite surface of said end piece member (34), and cup means (40) defining said side walls (24) and including bottom wall means (42), said bottom wall means (42) including second projection means (44) extending from said bottom wall means (42) for engaging said female portion (38) of said projection means (26) of said end piece member (34).

4,370,919
VENT CAP ASSEMBLY FOR A MONITORING WELL

Walter R. Wagner, Minneapolis, and Richard M. Duda, Maplewood, both of Minn., assignors to UOP Inc., Des Plaines, Ill.
Filed Jan. 29, 1981, Ser. No. 229,392
Int. Cl.³ F23L *17/02*
U.S. Cl. 98—122 **2 Claims**

1. A venting cap assembly system for protecting the upper end of a monitoring well riser pipe from contamination, said system comprising a first tab member attached to the side of the riser pipe at a predetermined distance from its top, a hollow

cap member having an inner diameter which is slightly greater than the outer diameter of said riser pipe upon which said cap is placed by an amount sufficient to provide a venting passageway which is open at all times, a second tab member integrally attached to said cap member, an aperture in each of said tab members which is sized so as to be capable of receiving a padlock and positioned so that the apertures can be aligned

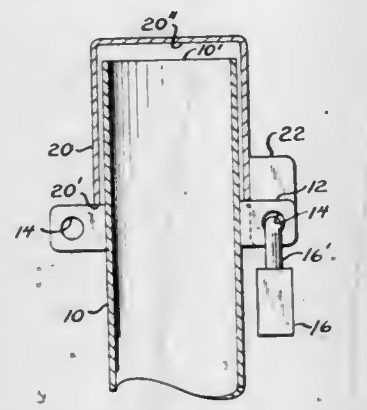

with each other when the cap member is assembled over the top of said riser pipe with the tab members immediately adjacent one another and when the cap is resting on the first tab, said cap member having cylindrical internal side wall portions which are at least sufficiently longer than said predetermined distance that the inner end surface of said cap will be vertically spaced from the upper end of said riser pipe when said cap member is resting on said first tab member.

4,370,920
ROTATING BARBECUE GRILL
Joseph Henriques, 32 Hidden Brook Dr., Brookfield, Conn. 06804, and Robert A. Bennett, 170 Sturbridge Rd., Easton, Conn. 06425
Filed Oct. 17, 1977, Ser. No. 842,617
Int. Cl.[3] A47J *37/04*
U.S. Cl. 99—339 **11 Claims**

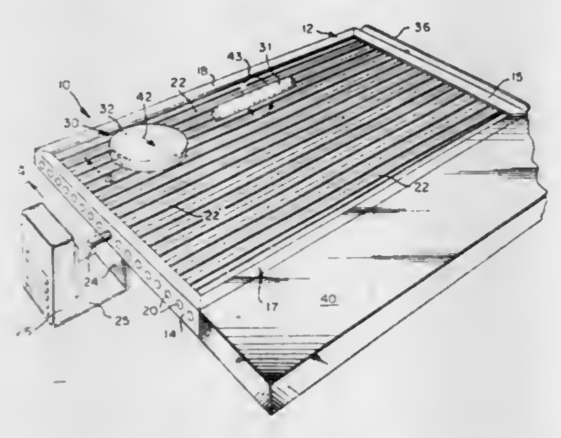

1. A rotating barbecue grill for use with a motor, comprising:

(A) a peripheral framework including two oppositely positioned apertured side members parallel to each other with their respective apertures aligned with each other;

(B) an elongated substantially cylindrical member rotatably mounted through aligned apertures in said side members, having a first end protruding outwardly from the first side member, said first end shaped for removable continuous rotational driving engagement by said motor, and having its other end protruding from said second side member, with either end having a crank-like portion;

(C) a plurality of elongated substantially cylindrical members passing through respective aligned apertures in the side members, each having a crank-like portion at the end thereof, corresponding to the end of the driven cylindrical member having the crank-like portion, these members in combination with the driven cylindrical member defining a grilling surface for the placement of cylindrically shaped food items between adjacent cylindrical members and for the placement of flat sided food items on top of at least two adjacent cylindrical members;

(D) a drive member incorporating another plurality of apertures for rotatably receiving the crank-like portions of the driven cylindrical member and the other cylindrical members so that continuous rotational movement of the crank-like portion of the driven cylindrical member imparts similar continuous rotational movement in the crank-like portions of the remaining elongated members; and

(E) a hot plate positioned parallel to one of the elongated members having only one adjacent elongated member so that flat sided food items placed on the elongated members move across the grilling surface and are deposited on the hot plate;

whereby rotation of the driven cylindrical member causes all of the interconnected remaining elongated members to turn in the same direction and with the same speed as the driven member so as to form a grilling surface with rotating members; and whereby cylindrically shaped food items such as frankfurters are automatically turned by the cylindrical members while flat sided food items such as hamburgers are moved across the grilling surface onto the hot plate.

4,370,921
DOUGHNUT FRYER GUIDE
George O. Moller, Dumont, and Richard L. Twiford, South River, both of N.J., assignors to International Telephone and Telegraph Corporation, New York, N.Y.
Filed Apr. 22, 1981, Ser. No. 256,324
Int. Cl.[3] A47J *37/12*
U.S. Cl. 99—405 **12 Claims**

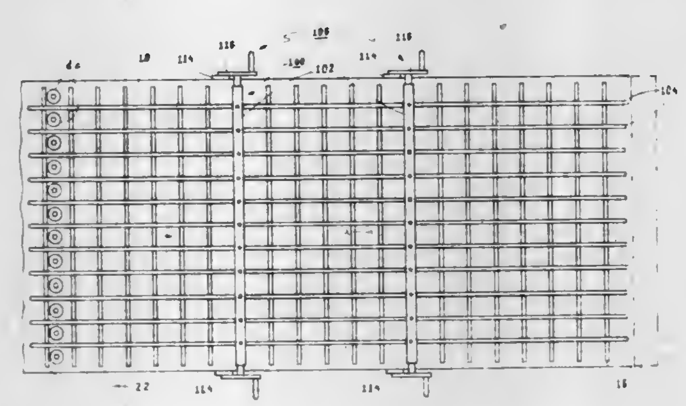

1. A doughnut fryer guide for use in a doughnut frying machine having propelling means for advancing dough forms through a hot oil bath, said doughnut fryer guide comprising:

a plurality of guide bars secured together as a unit for limiting movement of a plurality of adjacent rows of advancing dough forms transverse to the direction of advance and maintaining said advancing dough forms in said plurality of rows when said guide bars are in an operative position; and

retracting means for moving said guide bars as a unit between said operative position and a retracted position in which said guide bars do not interfere with the movement of the dough forms.

4,370,922
NUTCRACKER
Ernest J. Rollband, 3415 Slaterville Rd., Brooktondale, N.Y. 14816
Filed Feb. 5, 1981, Ser. No. 231,897
Int. Cl.[3] A23N *5/00*
U.S. Cl. 99—572 **7 Claims**

1. A nutcracker, comprising:

a. base means for supporting the nutcracker;

b. a receiver assembly mounted on the base means so as to be slidable along at least part of the length of the base means, comprising

1. nut receiving means for holding an end of a nut to be cracked;
2. a plurality of disk elements, each having two parallel flat faces and a thin circumferential edge;
3. said disk elements being assembled with the flat faces of each disk element in slidable contact with a flat face of an adjoining element, such that the flat faces of each disk element can be made to slide along the flat faces of the adjoining disk elements;
4. the assembly of disk elements being normally in a coaxial arrangement with the circumferential edges in alignment;
5. said assembly of disk elements being attached to the nut receiving means for co-operative motion therewith;
6. means for sliding the receiver assembly along the base means;

c. piston means adapted for holding an end of the nut to be cracked, slidably mounted on the base means along the same axis of movement as the receiver assembly, such that the piston means and nut receiving means may hold opposite ends of the nut;

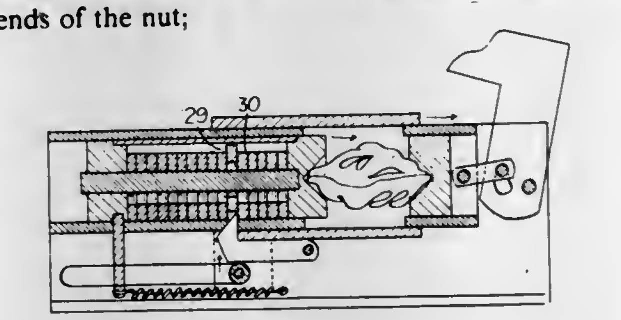

d. means for biasing the nut receiver assembly toward the piston means such that a nut inserted between the piston and nut receiving means is held firmly therebetween;

e. latching means attached to the base means for preventing slidable motion of the receiver assembly along the base means, holding said receiver assembly in its biased position against the nut, comprising

1. raising means for contacting the circumferential edge of at least one of the receiver assembly disk elements, and moving said element out of its normal co-axial alignment relative to the others by causing said disk element to move slidably along the flat faces of the adjoining disk elements;
2. said motion of at least one of the disk elements exposing at least part of one of the flat faces on at least one adjoining disk element;
3. locking means for contacting said exposed flat face, whereby the slidable motion of the receiver assembly along the base means is prevented;

f. means for slidably moving the piston means toward the nut receiving means, locked into place by the latching means, cracking the nut held therebetween.

4,370,923
APPARATUS FOR LEVELING THE SURFACE OF A STRIP OF PAPER
Sylvia Schmidt, Reutlingen, Fed. Rep. of Germany, assignor to Kleinewefers GmbH, Krefeld, Fed. Rep. of Germany
Continuation of Ser. No. 44,169, May 31, 1979, abandoned. This application Feb. 10, 1981, Ser. No. 233,063
Claims priority, application Fed. Rep. of Germany, May 31, 1978, 2823738
Int. Cl.[3] B30B *3/04, 15/26, 15/34*
U.S. Cl. 100—47 **10 Claims**

1. Apparatus for leveling the surface of a strip of paper, said apparatus having at least two rollers forming a roller pair for pressing against the strip of paper guided between them with an adjustable force by a load device, at least one roller of said roller pair having a surface influenced by a temperature device, said apparatus comprising:

actual value indicator means for producing an actual characteristic value signal representative of the smoothness of the surface of the strip of paper;

set point value indicator means for producing a set point value signal representative of the desired smoothness of the surface of the strip of paper;

means for producing a load signal representative of the force applied by said load device to said strip of paper;

temperature controlling means for changing the surface temperature of at least one of said two rollers to change the temperature of a surface of said strip of paper, said temperature controlling means including means for producing a temperature value signal representative of the temperature of a surface of said strip of paper;

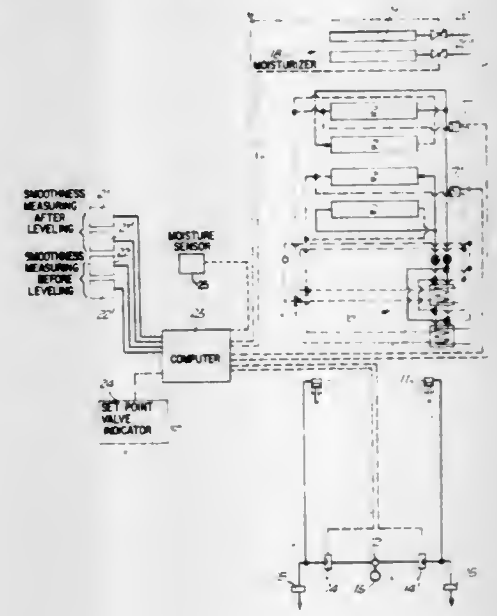

computer means connected to receive said actual characteristic value, set point value, load and temperature value signals for calculating adjustment values for said load device and said temperature controlling means and for producing output load and output temperature controlling signals representative of the calculated adjustment values; and

said computer means also being connected to said load device and said temperature controlling means;

wherein said computer means transmits said output load and output temperature controlling signals to said load device and said temperature controlling means, respectively, for varying the force applied to the strip of paper and the temperature of a surface of said strip of paper in accordance with the calculated adjustment values, such that the surface of the strip of paper is leveled with a minimal amount of force applied to said strip of paper.

4,370,924
AGRICULTURAL BALERS
James A. Munro, Aylesbury, England, assignor to Sperry Corporation, New Holland, Pa.
Filed Jul. 28, 1980, Ser. No. 172,597
Int. Cl.[3] B30B *15/30*
U.S. Cl. 100—189 **4 Claims**

1. A baler comprising:

a feed area having first and second ends;

a bale chamber, said first end of said feed area being adjacent said bale chamber;

a pair of telescopically interconnected support members operably connected to said bailer for movement in loop-like paths, said support members sliding freely with respect to each other during movement in said loop-like paths;

a first one of said support members moving adjacent said first end of said feed area;
a second one of said support members moving adjacent said second end of said feed area;

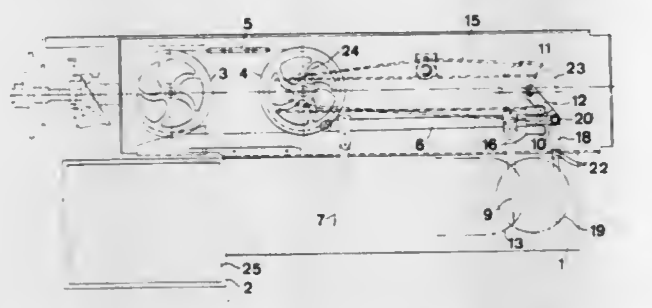

a first feed finger directly connected to said first support member; and
a second feed finger directly connected to said second support member.

4,370,925
APPARATUS FOR MULTIPLE COLOR PRINTING
Ozawa Kazumi, Koga, and No Shinichiro, Hooya, both of Japan, assignors to Kabushiki Kaisha Yakult Honsha, Tokyo, Japan
PCT No. PCT/JP80/00205, § 371 Date Apr. 13, 1981, § 102(e) Date Apr. 13, 1981, PCT Pub. No. WO81/00693, PCT Pub. Date Mar. 19, 1981
PCT Filed Sep. 10, 1980, Ser. No. 253,756
Claims priority, application Japan, Sep. 10, 1979, 54-115245
Int. Cl.³ B41F *17/20*
U.S. Cl. 101—40 **1 Claim**

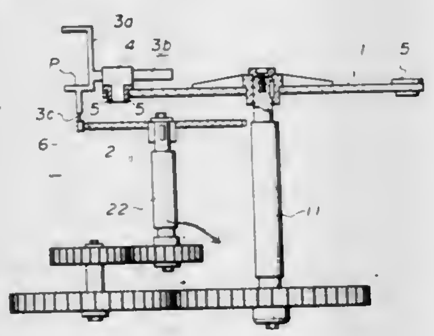

1. A continuous multicolor printing apparatus for sequentially printing the surfaces of cylindrical articles which are successively fed and conveyed at a constant speed, comprising a conveyor unit adapted to convey said articles at a constant speed, said conveyor unit including a rotary disk having a plurality of bearings mounted on the outer periphery thereof and having a rotating shaft for rotating said disk, a conveyor chain arranged to be moved along a predetermined locus controlled by inner and outer guides, a plurality of support means each having a cradle for supporting an article to be printed, a plurality of rotary printing units disposed along the conveying locus of said articles, cradle rotating units for rotating said cradle to allow the articles to be brought into rolling contact with said printing units, a feeding unit for supplying the articles to the conveyor and a delivery unit for delivering printed articles from the apparatus, said support means including an arm, a frame for holding said article to be printed and a connecting member, a freely rotatable shaft mounted on each one of said bearings, said arm of said support means being arranged to be slidably fitted into each respective rotatable shaft, said connecting member being connected through a linkage with said conveyor chain, a sprocket having a further shaft driven by a prime mover and adapted to drive said conveyor chain, said rotating shaft of said rotary disk being arranged to rotate synchronously with said rotating shaft of said sprocket, said cradle rotating units each including a cradle rotating sprocket adapted to rotate said cradle, a fixed plate having a configuration similar to that of said conveying locus and a fixed chain stretching around a major part of the outer periphery of said fixed plate, said sprocket engaging said fixed chain so as to be moved therealong.

4,370,926
PRINTING PRESS FOR PRINTING SHEETS OF CORRUGATED PAPERBOARD
Fukutaro Hattori, Kasugai, Japan, assignor to Isowa Industry Co., Ltd., Nagoya, Japan
Filed Jan. 30, 1981, Ser. No. 229,997
Claims priority, application Japan, Feb. 2, 1980, 55-11701
Int. Cl.³ B41F *1/46, 31/06*
U.S. Cl. 101—207 **4 Claims**

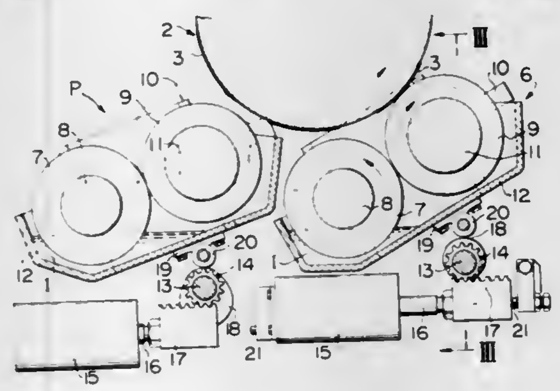

1. An inking device for a rotary printing press having a plate cylinder and a pressing cylinder cooperating with the plate cylinder, particularly for printing sheets of corrugated paperboard, comprising:
at least two inking arrangements disposed to be movable relative to said plate cylinder, each of said inking arrangements including an ink fountain containing ink and an ink fountain roller partially immersed in the ink; and
means for moving one of said inking arrangements into an ink transferring relationship with respect to said plate cylinder and for moving the other inking arrangement out of ink transferring relationship, each of said inking arrangements being moved solely by pivoting about an axis, the pivotal axes of the inking arrangements being parallel to and spaced from each other each of said inking arrangements comprising a form roller carried by the inking arrangement in contact with said ink fountain roller.

4,370,927
PAPER WEB THREADING APPARATUS FOR ROTARY PRINTING MACHINES
Hermann Fischer, Augsburg, Fed. Rep. of Germany, assignor to M.A.N.-ROLAND Druckmaschinen Aktiengesellschaft, Offenbach am Main, Fed. Rep. of Germany
Filed Apr. 21, 1981, Ser. No. 256,133
Claims priority, application Fed. Rep. of Germany, Apr. 23, 1980, 8011068
Int. Cl.³ B41F *13/02*
U.S. Cl. 101—228 **15 Claims**

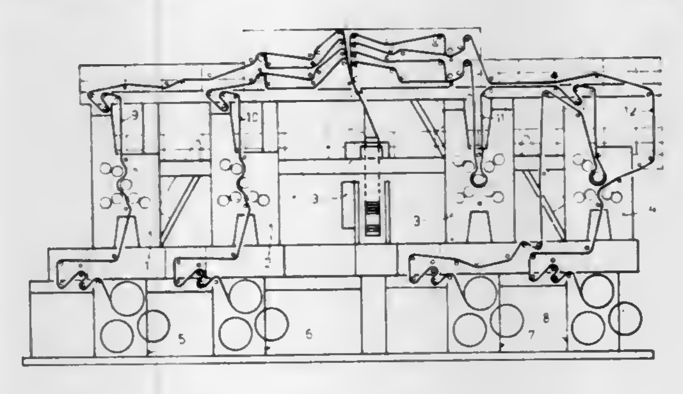

1. Web threading apparatus for a rotary printing machine to

thread a web of material for printing thereon in a predetermined threading path through the machine, comprising
a tubular threading guide (**15**) of essentially circular cross section including a plurality of threading guide tube sections (**44, 43; 52, 53, 64, 65**) positioned on the machine in accordance with said path;
an elongated flexible threading element (**14**) positioned in said tube sections, the threading element having a cross-sectional shape which has the characteristic that the resistance against bending of the element in any direction with respect to the longitudinal extent thereof is at least approximately equal;
the threading guide tube sections being sequentially positioned in accordance with said path, the tube sections being formed with a slit (**17**) therein;
a pulling hook (**16**) secured to the threading guide element (**14**) and extending through said slit in the tube sections;
and at least one friction drive station positioned between adjacent tube sections comprising
a plurality of friction drive wheels (**48, 49, 50**) engaging said flexible threading element, a first one of said friction drive wheels (**50**) engaging the flexible element (**14**) from one lateral side, and two friction drive wheels (**48, 49**) engaging the flexible threading element from the other side and positioned with respect to said first frictional drive wheel to press the flexible threading element against said first frictional drive wheel over a predetermined angular arc position thereof,
the end positions of the tube section adjacent said drive wheel being directed essentially tangentially towards the two drive wheels to provide for positive feed and positioning of the threading element within the tube sections and guidance in the zone between said wheels.

4,370,928
SHEET FED ROTARY PRESS HAVING AN AUXILIARY GRIPPER SYSTEM ARRANGED BELOW A FEEDING CYLINDER
Günter Weisbach, Radebeul; Günter Lucius, Dresden, and Dieter Plage, Coswig, all of German Democratic Rep., assignors to VEB Kombinat Polygraph "Werner Lamberz" Leipzig, Leipzig, German Democratic Rep.
Continuation-in-part of Ser. No. 135,627, Mar. 31, 1980. This application May 29, 1980, Ser. No. 154,303
Claims priority, application German Democratic Rep., Feb. 4, 1979, 211938
Int. Cl.³ B41F *21/05;* **B65H** *5/10, 5/14*
U.S. Cl. 101—242 **6 Claims**

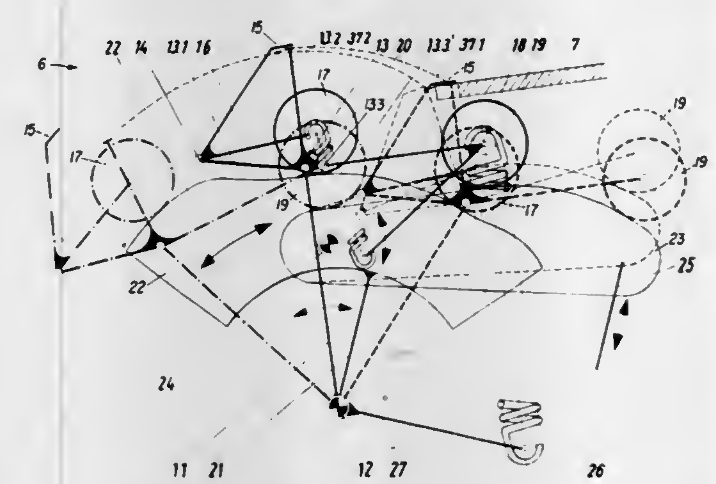

1. A sheet fed rotary press comprising at least one set of printing cylinders; a feed cylinder cooperating with said one set; a sheet fed table having an outlet part arranged below said feed cylinder and extending in a plane which is spaced apart and directed away from the periphery of said feed cylinder; a rocking auxiliary gripper system arranged below the feed cylinder for gripping sheets from said outlet part and transferring sheets upwardly toward said feed cylinder; said auxiliary gripper system including a first control cam and a second control cam, a driving rocker arm, a three-armed lever pivotably supported on the rocker arm, an auxiliary gripper having a lip pivotably mounted on a first arm of the lever and a stop formed at the free end of a second arm of the lever, a first cam follower cooperating with the first control cam and being connected to said lip to control the movement of the latter, and a second cam follower rotatably supported on the third arm of the lever and cooperating with the second control cam.

4,370,929
CONTACT HEAD
Wolfgang Steinicke, Olympiaring 43; Wolfgang Badura, Maerzfeld 8; Alois Schiessl, Hochfeldstrasse 26; Werner Weinzierl, Schillerstrasse 36a, all of D-8230 Bad Reichenhall, and Hartmut Krone, Gaihofstrasse 13, D-7841 Auggen, all of Fed. Rep. of Germany
Filed Aug. 4, 1980, Ser. No. 175,024
Claims priority, application Fed. Rep. of Germany, Aug. 14, 1979, 2932921
Int. Cl.³ F42C *19/12;* **F42B** *9/08*
U.S. Cl. 102—202 **9 Claims**

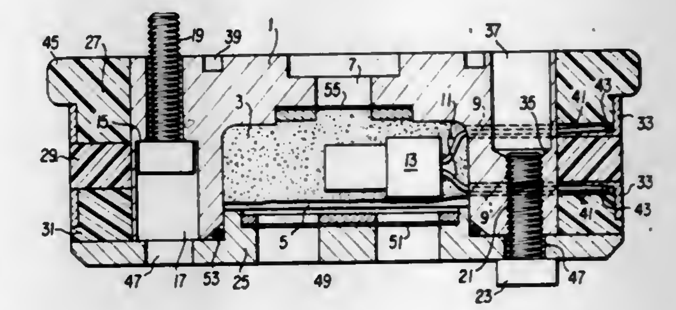

1. A contact head for a projectile which is capable of being fired from an electrically actuable launcher, said head comprising a solid metal core formed on one side with a recess constituting a propellent charge chamber, formed with a central bore leading to said recess for reception of an ignition charge unit, formed with substantially radially extending bores leading into said recess for the reception of firing circuit wires, formed in the part surrounding said recess with a first set of bores having an internal shoulder substantially in the centre of the thickness of said part for receiving connecting screws for attaching the contact head to a container of said projectile, and formed also in the part surrounding said recess with a second set of threaded bores for receiving the threaded shanks of fixing screws, said bores of said first and second sets alternating at substantially equal angles about the longitudinal axis of said core; a propellent charge located in said propellent charge chamber; a primer capsule disposed in said propellent charge; an elastic protective ring member coaxially surrounding said core; first and second contact rings carried by said protective ring member; fixing circuit wires connecting said first and second contact rings and said primer capsule; a base plate secured to said one side of the core so as tightly to seal off at least said propellent charge chamber, the base plate being formed with bores corresponding with and adapted to register with the bores of the first and second sets formed in the part of the core surrounding said recess, and having breakage points for the egress of gases upon ignition of said propellent charge; connecting screws received in said bores of said first set of bores; and fixing screws fixing said base plate to the core and threadedly engaging in the bores of the second set of bores.

4,370,930

END CAP FOR A PROPELLANT CONTAINER

Robert A. Strasser, Livonia, and Stephen W. Goch, Northville, both of Mich., assignors to Ford Motor Company, Dearborn, Mich.

Filed Dec. 29, 1980, Ser. No. 220,478

Int. Cl.³ F42B *5/20, 9/18*

U.S. Cl. 102—530 **4 Claims**

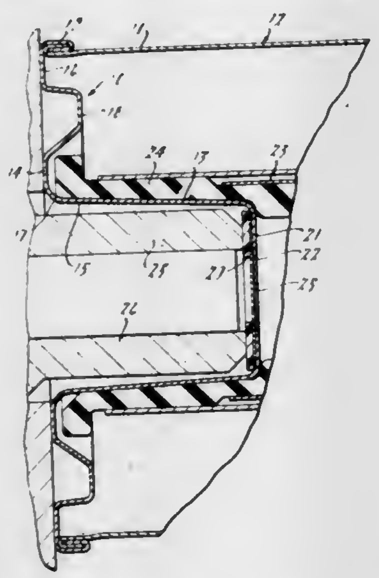

1. An end cap adapted to fit on one end of a tubular container for propellant material,
 the end cap comprising a deep drawn cup adapted to receive a propellant igniter means,
 the outer width dimension of the cup being less than the inner width dimension of the container,
 the cup having a flange engirding one of its ends,
 the cup being inserted into the propellant container to a depth permitted by the flange abutting a peripheral edge of the container,
 the excess material of the flange being rolled and crimped over the container peripheral edge for retention of the cup within the container,
 the cup having at its end opposite the flanged end a base wall having a centrally located aperture through which a signal from an igniter means is passable to ignite the propellant in the container,
 the aperture normally being sealed by a composite laminate of plastic film and metal foil that is rupturable upon occurrence of the igniter means signal,
 and a plastic annulus interposed between the igniter means and the laminate to protect the latter against frictional erosion by the igniter means by environmental vibrations transmitted to the propellant container.

4,370,931

TRANSPORTATION SYSTEM UTILIZING A STRETCHABLE TRAIN OF CARS AND STRETCHABLE BANDCONVEYORS

Axel de Broqueville, 2717 Stanford St., Dallas, Tex. 75225

Continuation-in-part of Ser. No. 19,776, Mar. 12, 1979, abandoned. This application Mar. 6, 1980, Ser. No. 127,541

Int. Cl.³ A63G *1/00*

U.S. Cl. 104—20 **20 Claims**

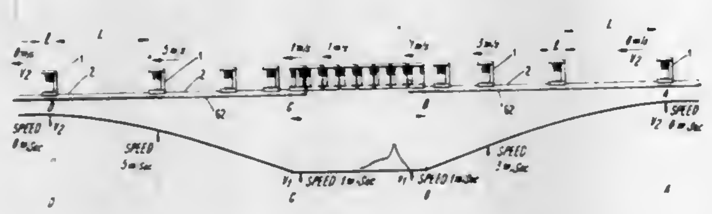

14. A transportation device comprising:
 a plurality of successive load carrying components,
 means for moving said components along a closed loop path,
 means for controlling the speed of said components and their distance apart, said controlling means operable by moving said components along said closed loop path without rotation of said components traversed to said closed-loop path, and said controlling means comprises: threaded rods and nuts associated therewith;
 means for attaching at least one of said moving components to one end of at least one threaded rod and the next component to at least one nut associated therewith; and
 means for rotating said nuts for increasing and decreasing the distance between consecutive components.

4,370,932

APPARATUS FOR THE INTERCONNECTION OF TWO MOBILE CARRIERS GUIDED BY PARALLEL RAILS

Jean Etcheparre, and Bernard Etcheparre, both of Merignac, France, assignors to Lectra Systemes S.A., Pont de la Maye, France

Filed Sep. 22, 1980, Ser. No. 189,813

Claims priority, application France, Sep. 26, 1979, 79 24459

Int. Cl.³ B66C *13/18*

U.S. Cl. 105—163 SK **2 Claims**

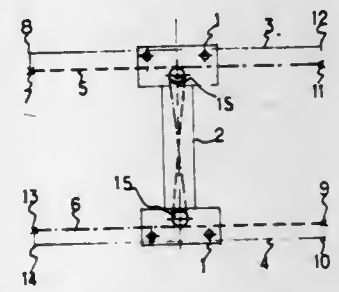

1. Apparatus interconnecting two mobile carriages which are connected by a rigid beam guided by and along parallel guide rails, said apparatus comprising:
 (a) first and second cables interconnecting said carriages to said parallel guide rails, one end of each of said cables being attached to an end of a respective one of said guide rails and the other end of each of said cables being attached to a generally diagonally opposed end of the other, parallel guide rail;
 (b) a single return pulley fixedly associated with each of said carriages, said carriages supporting portions of said cables intermediate the ends of both of said cables, each of said cables being supported along an exterior peripheral portion of the pulleys, as viewed with respect to the attachment ends of said cables to said rails, each of said cables thereby describing a generally Z-shaped configuration between said one cable end and said other cable end, whereby the configurations of the cables are symmetric, the displacement of either one of said carriages alone placing a respective one of said cables under tension, thereby imposing an identical and simultaneous displacement, with respect both to direction and distance, upon said other carriage, said carriages being generally maintained in alignment by the other, non-tensioned cable.

4,370,933

RAILWAY CAR TRUCK BOLSTER ASSEMBLY

Harry W. Mulcahy, Griffith, Ind., assignor to AMSTED Industries Incorporated, Chicago, Ill.

Filed Apr. 6, 1981, Ser. No. 251,398

Int. Cl.³ B61F *5/06, 5/12, 5/50*

U.S. Cl. 105—197 DB **1 Claim**

1. A railroad truck assembly comprising a pair of laterally spaced side frames, a bolster transversely positioned between said side frames with end portions resiliently supported in windows formed in said side frames, each said bolster end portion formed with a pair of longitudinally spaced, in the longitudinal direction of the truck, shoe pockets, each receiving a friction shoe to engage with vertical sidewalls defining said windows, the improvement comprising, a wear liner means disposed on each said sidewall and having its lateral edges extending beyond a width of said friction shoe, an inner and outer set of vertical lands formed as part of said bolster end portions on each lateral side of said shoe pockets such that a

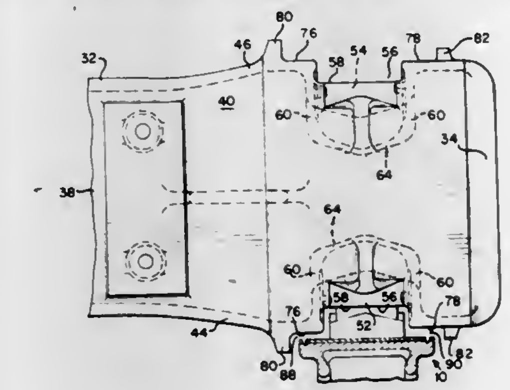

longitudinal space between said inner lands and said wear liner means is less than a longitudinal space between said outer lands and said wear liner means, so that during relative movements between said bolster and said side frames, contact therebetween is limited to said bolster inner lands and said wear liner means of said side frames.

4,370,934

METHOD FOR PRODUCTION OF A COMPRESSION-PROOF SHELTER AND PREFABRICATED MEANS FOR USE IN THIS METHOD

Wilhelm Häussler, Residenzplatz 1, D-8960 Kempten, Fed. Rep. of Germany

Filed Jan. 12, 1981, Ser. No. 224,026

Claims priority, application Fed. Rep. of Germany, Feb. 4, 1980, 3003988; Oct. 18, 1980, 3039465

Int. Cl.³ E04H *9/04*

U.S. Cl. 109—1 S **13 Claims**

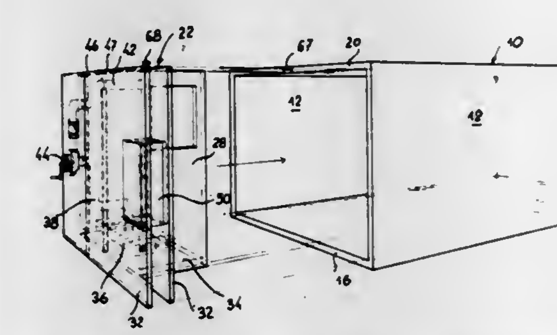

1. A method for producing a shelter in the form of an oblong prismatic housing having at least one compression-proof cross wall of a large thickness within the housing partitioning off a person chamber from an air filtering chamber and/or an emergency exit chamber, the method comprising the steps: Providing at least one opening in that portion of the ceiling of a light-weight housing and/or at least one longitudinal wall adjacent said ceiling corresponding to the position of the cross wall; arranging a dead or lost cross shuttering means consisting of a pair of thin walls within said housing, connection means mounted or mounting at the shuttering means and extending from one side of which to the other side, said connection means at least comprising spacer elements, ventilation conduit means and a passage or corridor box; transporting the housing from the working place to the place of use before or after having arranged the shuttering means; pouring concrete through the opening into the shuttering means and thereby forming a compression-proof cross wall at the place of use of the shelter; and using the housing as an inner shuttering when forming a compression-proof cover by surrounding walls of reinforced concrete.

4,370,935

WALL SAFE AND DOOR HINGING MEANS THEREFOR

Lawrence R. Link, 3105 Trempot Dr., Louisville, Ky. 40205

Filed Jul. 14, 1980, Ser. No. 167,833

Int. Cl.³ E05G *1/04*

U.S. Cl. 109—51 **13 Claims**

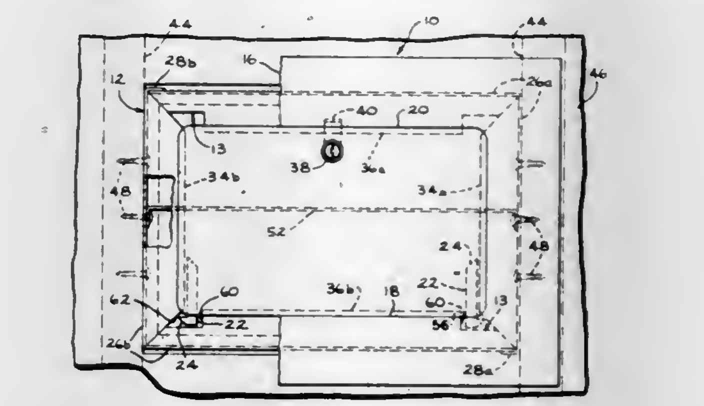

1. A wall safe comprising
 a rectangular box defining a storage chamber and an access opening in a front surface of said box communicating with said chamber, said box being adapted to fit relatively closely between adjacent vertical wall studs of a building,
 fastening means for securing the vertical sides of said box to said wall studs,
 a rectangularly shaped face plate attached to said front surface and defining a door opening therein disposed in registry with said access opening, said face plate having boltless edge portions which extend beyond said box sides across at least a major portion of the front surface of said wall studs,
 a door hingably connected to said box for closing in close fitting relation to said door and for opening into a horizontal position in front of the lower margin of said door opening to form an article supporting platform, and
 a pair of L-shaped hinges fixedly attached along one leg portion thereof to a lower corner portion of said door, the other laterally projecting leg portions thereof extending beyond the lower edge of said door behind said face plate and against a wall defining a front surface of said chamber when said door is closed in said door opening, said laterally projecting leg portions extending behind and against vertical edge portions of the access opening defining front wall of said box to thus support said door in a horizontal position when said door is open to form said platform.

4,370,936

FABRIC TUBE FORMING METHODS AND APPARATUS

James D. Moyer, and Robert S. Hoffert, both of Winchester, Va., assignors to Midwestco, Inc., Niles, Ill.

Filed Oct. 18, 1979, Ser. No. 86,141

Int. Cl.³ D05B *13/00*

U.S. Cl. 112—10 **13 Claims**

1. Apparatus for forming a tubular fabric bag with ends square to the length of the bag comprising:
 means for feeding a flat sheet of fabric material along an extended path of travel,
 means for stopping the feeding of said sheet,
 means for cutting said sheet along a substantial portion of its width on a line that is spaced inwardly of each edge of the sheet,
 means for resuming feeding of the sheet along said path,
 means downstream of the cutting means for folding the edges of the sheet into a seam with the cut line precisely aligned on opposite sides of the seam so that the bag after its seam is sewn can be separated by snipping through the seam to provide a bag with precisely square ends, and
 means for sewing the seam.

11. Apparatus for automatically forming a filter bag tube comprising

means for frictionally gripping each side edge of a flat sheet of fabric material,
means for moving the gripping means toward each other to move the edges toward each other,

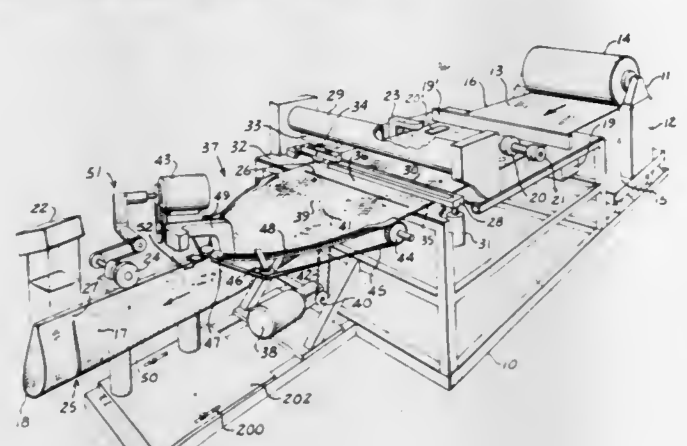

means for engaging said edges in predetermined alignment with each other and
means for sewing said edges together.

4,370,937
TUFTING MACHINES
Jon P. M. Denny, 9 Grange Dr., Emley, Huddersfield, England (HD8 9SF)
Filed Aug. 1, 1980, Ser. No. 174,665
Claims priority, application United Kingdom, Aug. 3, 1979, 7927222
Int. Cl.[3] D05C *15/26*
U.S. Cl. 112—79 A **9 Claims**

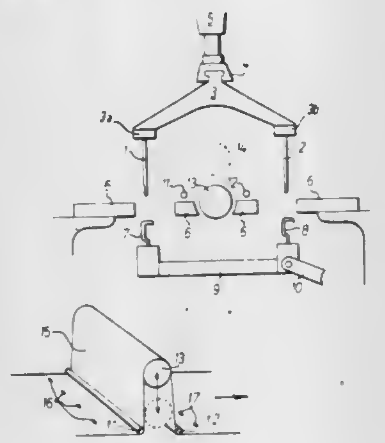

1. A tufting machine for operating on an elongate workpiece web displaced lengthwise through the machine, comprising a pair of needle bars, a respective row of needles carried by each needle bar, means mounting said two rows of needles transversely in relation to the direction of workpiece movement with a space between the two rows in said direction of movement, a device mounted in said space between the two rows of needles and adapted to engage the workpiece web and means for adjusting said device to enable the length of said workpiece web disposed between the two rows of needles to be selectively increased or decreased.

9. A tufting machine for operating on an elongate workpiece web displaceable lengthwise through the machine, comprising a pair of needle bars, a respective row of needles carried by each needle bar, means mounting said two rows of needles transversely in relation to the direction of workpiece movement with a space between the two rows in said direction of movement, a non-rotatable bar in said space between the two rows of needles and adapted to engage the workpiece web, and means adjustably mounting said non-rotatable bar to adjust selectively the warpwise length of said workpiece web disposed between the two rows of needles.

4,370,938
ELECTRONIC SEWING MACHINE WITH STITCH CONTROL DEPENDENT ON SEWING MATERIAL
Bengt A. Bergvall, Huskvarna, Sweden, assignor to Husqvarna Aktiebolag, Huskvarna, Sweden
Filed Dec. 16, 1980, Ser. No. 216,929
Claims priority, application Sweden, Dec. 11, 1979, 7910201
Int. Cl.[3] D05B *3/02*
U.S. Cl. 112—158 E **7 Claims**

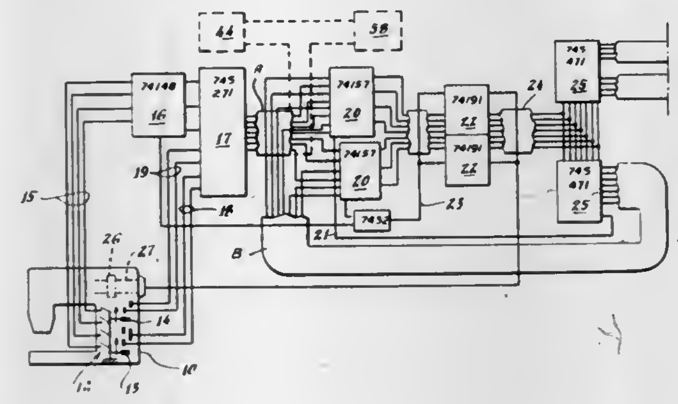

1. In a sewing machine having a needle positioning mechanism, a cloth feeder, input means adapted to be adjusted by an operator, means for controlling the needle positioning mechanism to provide transverse movement of a needle and for controlling movements of the cloth feeder for providing determined seam patterns on a sewing material, and a memory unit connected to control said controlling means as a function of adjustments on said input means; the improvement wherein said input means comprises means for producing address signals in accordance with the setting thereof, means applying said address signals to said memory unit whereby said memory unit produces output signals in accordance with pre-programmed data therein for controlling said controlling means in accordance therewith, and further means for stepping the address signal output of said input means in dependence upon the completion of operations of said controlling means, the data stored in said memory unit including data relating to the empirically best stitch characteristics for different thicknesses and textures of said sewing material, whereby said input means may be set in accordance with said thickness and texture for the automatic adjustment of said seam.

4,370,939
METHOD AND MECHANISM FOR INSERTING AN ELASTIC BAND IN SELECTED AREAS OF MATTRESS-WRAPPING BEDCLOTHES
Francisco Carreras Fontcuberta, Caldas de Montbuy, Spain, assignor to Bassetti S.p.A., Milan, Italy
Filed Dec. 9, 1980, Ser. No. 214,866
Claims priority, application Spain, Dec. 12, 1979, 486826; Italy, Sep. 10, 1980, 24573 A/80
Int. Cl.[3] D05B *21/00, 97/00*
U.S. Cl. 112—262.2 **11 Claims**

1. A method for inserting an elastic band in selected angular areas of a mattress-wrapping bed sheet, comprising the steps of:
1. sensing the sewing seam uniting edgewise one of the four lateral flaps of said mattress-enveloping bed sheet;
2. signalling the sensing of such sewing seam to a stitch-counting assembly of a sewing machine in which a preselected number of stitches has been preset, corresponding to the length of said angular areas to be elasticized;
3. detecting the correct position of the bed sheet relative to the selected sewing line and guiding the bed sheet therealong causing the bed sheet portion not directly engaged by the folding and sewing operation vertically and freely to hang down;
4. folding the sheet edge at a position ahead of the sewing zone

to form a sheath intended to house an elastic band therewithin;
5. introducing the leading edge of a pretensioned elastic band into the sheath formed by the doubled edge of said bed sheet and starting the operation of the sewing needle of the machine to sew said elastic band and said doubled bed sheet edge together;
6. continuing the feed of elastic band and the sewing thereof along a sewing path length corresponding to said predetermined number of stitches;
7. moving said elastic band away of said sewing line and impressing a twist to the unsewn portion thereof;
8. snipping said elastic band twisted portion perpendicularly;
9. continuing the edge-folding operation and the sewing operation without the elastic band being present until the next following lateral-flap sewing seam is sensed;
10. resuming all the sequence of steps from 1 to 9 hereof until all the four angular areas of said mattress-enveloping sheet have been elasticized by respective segments of said elastic band;
11. finishing the sewing of the remaining non-elasticized zone of said bed sheet doubled edge, and
12. removing the finished textile article from the sewing area.

2. A sewing machine, comprising, in combination:
(a) an industrial sewing machine having a needle, a needle-bar, a needle-bar reciprocating mechanism, a needle plate, a shuttle, a presser foot and a fabric-feeding mechanism;
(b) a fixed member for supporting the fabric to be fitted with an

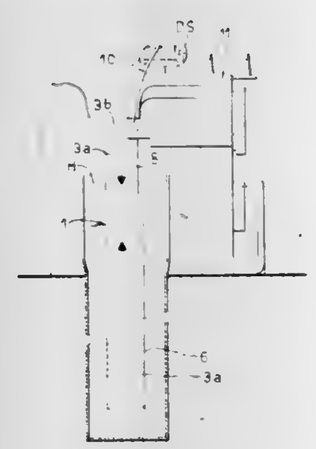

elastic band and for guiding it towards the sewing area of said sewing machine;
(c) a free vertical space beneath said fabric-supporting fixed member to have the portion of the fabric which is not engaged by the sewing machine freely and vertically depending;
(d) means for pressing the fabric entering the device against said fixed supporting member under the control of at least one device capable of sensing the position of the fabric edge;
(e) a thickness gauge for sensing the thickness of the transversal angular seams of said bed sheet;
(f) a fabric-edge-shaping and doubling device placed immediately downstream of said fabric-pressing means and said position-sensing device(s) for folding down the edge of said bed sheet fabric;
(g) an elastic band dispensing spool placed above said sewing machine;
(h) a mechanism for leading the elastic band towards the folded down fabric edge, for maintaining said elastic band in the space provided by said folded down fabric edge until said edge and said elastic band are sewn together, and for withdrawing said elastic band away of the sewing area of said sewing machine and of said folded fabric edge while concurrently impressing a twist to the unsewn portion of said elastic band;
(i) a braking device for tensioning said elastic band;
(j) a snipping mechanism essentially consisting of a snipping blade reciprocable on a vertical plane and housed in a specially provided space of the presser foot of said sewing machine;
(k) a stitch-counting assembly associated to a rotatable component part of said sewing-machine, and
(l) means actuable by said thickness gauge for starting the operation of the sewing machine and having it continued for a time as determined by said stitch-counting mechanism.

4,370,940
AUTOMATIC THREAD TRIMMER FOR COMPUTERIZED ZIGZAG EMBROIDERY SEWING MACHINE
Zecharia Melzer, and John E. Rice, Sr., both of Louisville, Ky., assignors to Louisville Manufacturing Co., Inc., Louisville, Ky.
Filed Mar. 12, 1981, Ser. No. 242,906
Int. Cl.[3] D05B *65/00*
U.S. Cl. 112—286 **8 Claims**

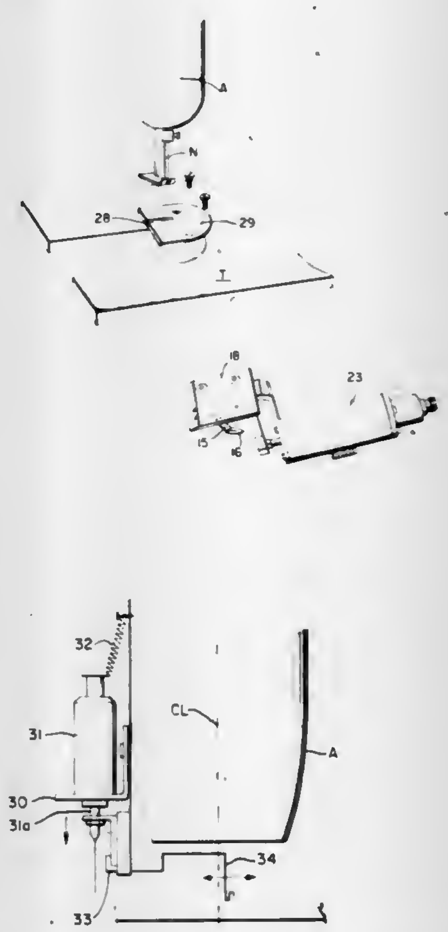

1. An automatic thread trimmer for use on a computerized embroidery sewing machine having a work table, a bobbin mechanism below said work table, an arm overhanging the work table with a needle driving means therein movable through one cycle for each cycle of operation of the sewing machine needle, and computerized control means connected to said machine for driving the needle driving means and shifting the needle according to the computer program, said thread trimmer comprising:
a thread catching member positioned below said work table and reciprocally movable across the path of a thread extending through said work table to the bobbin means for catching the thread at the end of the movement in one direction and drawing the thread with said thread catching member during movement in the other direction;
cutting means adjacent the path of movement of said thread catching means against which the thread catching means draws the thread for cutting the thread during movement in the other direction;
driving means connected to said thread catching member for driving said thread catching member in reciprocating movement;
wiper means positioned above said work table and having a

wiper reciprocally movable across the path of the thread for removing the thread after it has been cut by said cutting means;

wiper actuating means connected to said wiper for driving said wiper in reciprocating movement;

signal producing means associatd with the needle driving means for producing first and second signals, the first when said needle driving means is at a position in the cycle of operation of the needle where the needle is raised clear of the path of reciprocation of said thread catching member, and the second when the needle is raised clear of the path of reciprocation of said wiper; and

control means connected to said signal producing means and to said driving means and said wiper actuating means for receiving said signals from said signal producing means and discriminating when the signals are only in the order of said first signal and said second signal and thereupon actuating said driving means and said wiper actuating means in sequence.

4,370,941

APPARATUS FOR BATIKING EGGS AND THE LIKE

Betty R. Belton, 1007 N. Grand, Ellsworth, Kans. 67439

Filed Mar. 23, 1981, Ser. No. 246,645

Int. Cl.³ B05C *17/10*

U.S. Cl. 118—13 3 Claims

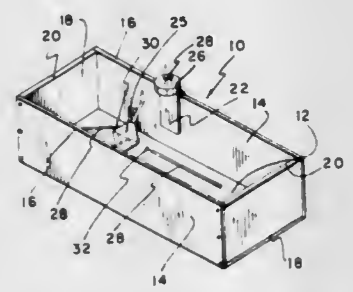

1. An apparatus for batiking eggs, articles, or the like, comprising an open top container means including a plurality of walls; a receptacle means for holding a wax means; a clamp means slidably, removably lodging over an edge of one of said walls and including said receptacle means secured thereto; burner means for positioning under said receptacle means for melting said wax means into a molten state; and wax teardropping means for dipping by the user of said batiking apparatus into said molten wax means in order to designly deposit said molten wax means onto said egg, article, or the like, while the batik apparatus user's hand holding said teardropping means rests on an edge of one of the walls and the remaining user's hand holds the egg, article, or the like, in the process of decorating the same; a lid means for removably positioning over said receptacle means in the event of kindling of said wax means within said receptacle means while being heated into a molten state by said burner means, said lid means including a wooden knob means secured thereto for grasping by the batik apparatus user in removing the lid means from the receptacle means; said clamp means comprises a structure defining a U-shape, said U-shaped clamp being inverted to slidably lodge over and along an edge of one of the walls; said receptacle means is defined by a cylindrical cup having a bottom affixed to said inverted U-shaped clamp; and said open top container means comprises a generally rectangular box having a pair of opposed end walls and a pair of opposed side walls, said inverted U-shaped clamp having said cylindrical cup secured thereto slidably lodges on and along one of said pair of opposed side walls.

4,370,942

PERFORATION OF WEB MATERIAL, ESPECIALLY UNITING PAPER FOR MAKING VENTILATED FILTER CIGARETTES

John G. Dowding, and Edward G. Preston, both of London, England, assignors to Molins Limited, London, England

Filed Aug. 1, 1980, Ser. No. 174,506

Claims priority, application United Kingdom, Aug. 2, 1979, 7927004; Apr. 10, 1980, 8011879; Apr. 14, 1980, 8012189

Int. Cl.³ B05C *1/16*

U.S. Cl. 118—40 6 Claims

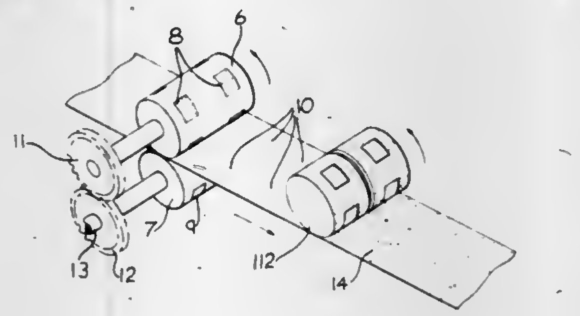

1. A filter attachment machine including means for perforating the uniting paper which is used to secure a filter to a cigarette, comprising a perforating roller having groups of pins at circumferentially-spaced positions, means including a backing roller for moving a band of uniting paper in contact with said perforating roller to perforate areas of the paper with said groups of pins, and drive means for driving both the perforating roller and the backing roller with a predetermined timing so that the peripheral speed of the backing roller exactly equals that of the perforating roller, said backing roller having a permanently-deformable surface formed with indentations exactly corresponding to the positions of the pins carried by said perforating roller, the deformable material forming the surface of the backing roller being such that the indentations are permanently formed by the pins when the rollers are first operated and the relative sizes of said perforating roller and said backing roller are such that, during each successive rotation of said rollers, each pin exactly enters the same indentation in said backing roller which it originally formed therein, whereby gaps are formed between the areas perforated by the pins which coincide with positions at which the uniting paper is to be laterally cut to produce individual portions for wrapping around corresponding cigarette and filter assemblies, each group of pins comprising a plurality of circumferentially-extending rows of substantially-equal length ending at each end near the cutting position, said groups being spaced so as to leave said gaps in the form of unperforated areas extending across the paper and of a width greater than the distance between adjacent pins in a group.

3. A filter attachment machine according to claim 1, and further including a cutting device which is arranged to cut the paper web along transverse lines lying between the perforated areas of the paper.

4. A filter attachment machine according to claim 3, including means for applying adhesive to the uniting paper along edge portions of the paper and laterally along areas lying between the perforated areas.

4,370,943

APPARATUS FOR PAINTING CONTAINERS

Kazutomi Watanabe; Sokichi Iwasaki, and Nobuyuki Baba, all of Sakai, Japan, assignors to Shin Nippon Koki Co., Ltd., Osaka, Japan

Filed Dec. 19, 1980, Ser. No. 218,192

Claims priority, application Japan, Dec. 22, 1979, 54-166297

Int. Cl.³ B05C *1/00*

U.S. Cl. 118—218 11 Claims

1. Apparatus for painting the outer circumferential surfaces of a plurality of cylindrical containers, comprising

a rotatable disc having a surface positioned in a vertical plane, said rotatable disc being rotatable about an axis lying in a horizontal plane;

a plurality of equally spaced rotatable mandrels secured to the surface of said disc along a concentric circle adjacent the periphery thereof and projecting horizontally therefrom, each of said mandrels following a predetermined path and being adapted to releasably support a cylindrical container;

a rotatable painting roll having a horizontal axis of rotation displaced vertically from said horizontal plane and positioned adjacent said disc, said painting roll being urged into close contact with the containers supported on said mandrels for painting said containers as said mandrels traverse said predetermined travel path;

a first rotatable paint storage roll, including a shaft, having a horizontal axis of rotation;

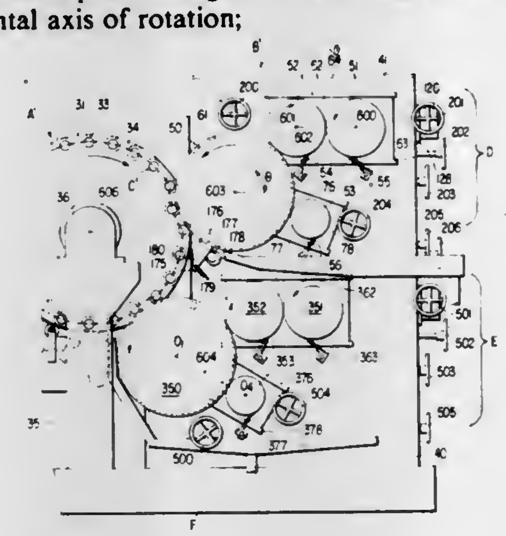

a second rotatable paint storage roll having a horizontal axis of rotation located above the horizontal axis of rotation of said painting roll, said second paint storage roll being interposed between said painting roll and said first paint storage roll, the axes of rotation of said first and second paint storage rolls being parallel and defining a horizontal plane, and the axis of rotation of said painting roll and said second paint storage roll being parallel and defining a plane which is angularly displaced with respect to said horizontal and vertical planes;

a second rotatable painting roll positioned in the direction of rotation of said disc from said first rotatable painting roll; and

means for displacing the predetermined path of said mandrels away from said second painting roll in the region between said first and second painting rolls.

4,370,944

APPARATUS FOR COATING THE INNER SURFACE OF LONG TUBES OF SMALL DIAMETER

Koji Nagata; Mamoru Nishikawa, and Shiro Sato, all of Nagoya, Japan, assignors to Sumitomo Light Metal Ind., Ltd., Tokyo, Japan

Filed Jan. 26, 1981, Ser. No. 228,682

Claims priority, application Japan, May 14, 1980, 55-63681

Int. Cl.³ B05B *3/18, 7/22*

U.S. Cl. 118—302 12 Claims

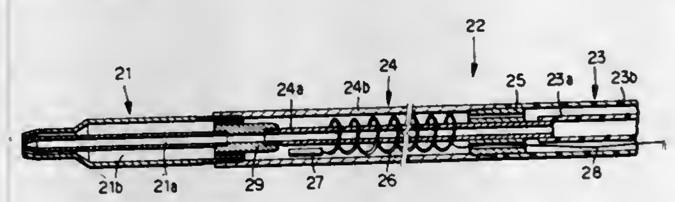

1. A coating apparatus for coating the inner surface of a long tube of small diameter by spraying a paint in atomization while being shifted from one end opening to the other end opening thereof comprising:

a supplying hose which is longer than said long tube for being inserted into and drawn back from said long tube and provided therein with respective passage for supplying a paint and compressed air;

a spray nozzle attached to the tip of said supplying hose for spraying the paint in atomization supplied from outside of said long tube; and

heating means disposed at least in the neighborhood of the attaching portion of said nozzle to said supplying hose for heating the paint and the compressed air to a predetermined temperature.

4,370,945

METHOD FOR GLUING OF PARTICLES CONTAINING CHIPS, FIBERS AND SIMILAR LIGNO-CELLULOSE-CONTAINING PARTICLES AND APPARATUS FOR THIS PURPOSE OF GLUING THE SAME

Heinrich Beckschulte, Salzkotten-Scharmede, and Wilhelm Schlüter, Altenbeken-Schwaney, both of Fed. Rep. of Germany, assignors to Gebrüder Lödige Maschinenbau Gesellschaft mit beschränkter Haftung, Paderborn, Fed. Rep. of Germany

Filed Apr. 23, 1981, Ser. No. 256,816

Claims priority, application Fed. Rep. of Germany, Apr. 25, 1980, 3016061

Int. Cl.³ G01D *13/22*

U.S. Cl. 118—303 24 Claims

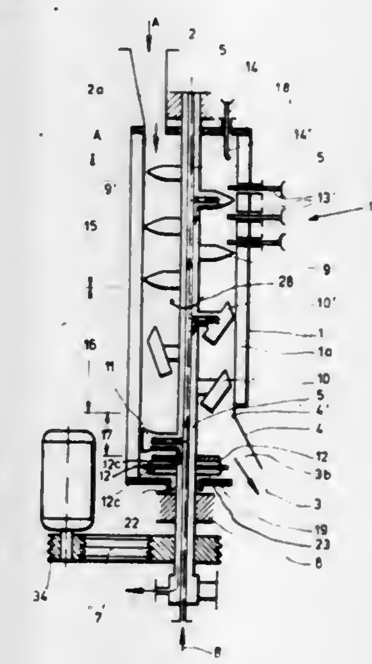

1. A gluing machine for application of glue on chips, fibers and similar ligno-cellulose-containing particles which are discharged falling free into an at least substantially vertical chute having a circular shaped cross section, as well as having an upper chip inlet and a chip outlet located therebelow and also including means for supply of glue and having rotating tools influencing the movement of the chips, comprising a drum-shaped chute means, a shaft rotating at relatively high speed passing through said chute means, outwardly projecting tool means on said shaft for imparting centrifugal forces on the free falling chip material exiting the upper inlet to form a rotating chip material ring that accumulates or deposits on the inner wall of the vertical chute and moves downwardly in a helical or spiral manner, brake tools also arranged on said shaft for transmitting upwardly directed components of movement instrumental in stopping the downward free-falling movement of the chips, the chip inlet providing a directional component parallel to the rotational axis of the shaft and the chip outlet being arranged at a lower end of the chute means, and means for feeding glue after the at least substantial formation of the

chip material ring and prior to subjecting the chips to the brake tools.

4,370,946

METHOD FOR CONDITIONING AND PRESERVING EGGS OF INSECT OOPHAGE PARASITES OR PROCESS FOR CONDITIONING AND PRESERVATION OF EGGS OF OOPHAGOUS PARASITES OF INSECTS

Jean D. Voegele; Pierre E. J. Jourdheuil, both of Antibes; Jeannine M. Pizzol nee Dalmasso, Parc des Mimosas, and Bernard C. J. Pintureau, Antibes, all of France, assignors to Institut National de la Recherche Agronomique - UNRA, Paris, France

PCT No. PCT/FR80/00114, § 371 Date Mar. 6, 1981, § 102(e) Date Mar. 6, 1981, PCT Pub. No. WO81/00037, PCT Pub. Date Jan. 22, 1981

PCT Filed Jul. 7, 1980, Ser. No. 243,962

Claims priority, application France, Jul. 9, 1979, 79 17774

Int. Cl.^{3} A01K *67/00*

U.S. Cl. 119—1 **8 Claims**

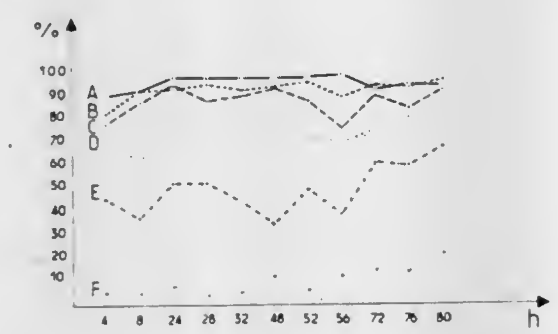

1. Method of conditioning and preserving insect oophage parasites eggs, intended notably for biological control of certain plant pests, including parasitage of an egg-host and preservation in the cold, said method comprising the steps of:
starting with Lepidoptera eggs of foodstuffs, in particular of *Ephestia kuhniella*, parasitizing these eggs with adult Trichogramma, subjecting the thus parasitized eggs to an incubation period of at least 24 h at 20° C., with a photoperiod of 8 h light and 16 h darkness and a relative humidity of 70 to 80%, subjecting the thus incubated eggs to an induction period of about 6 to 80 days, at a temperature below 15° C. with a photoperiod of 8 h light and 16 h darkness, and a relative humidity of about 70%, then preserving the eggs thus obtained at 3° C., with a photoperiod of 8 h light and 16 h darkness and at a relative humidity of 70 to 80%.

4,370,947

TROPICAL FISH EGG INCUBATOR

Mark A. Hilken, 709 E. 9th St., Spencer, Iowa 51301

Filed Apr. 13, 1981, Ser. No. 253,896

Int. Cl.^{3} A01K *61/00*

U.S. Cl. 119—3 **21 Claims**

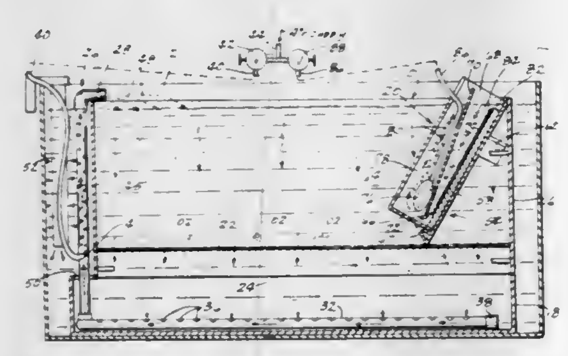

1. A fish egg incubator comprising, a water tank,
an enclosure positioned upright in said water tank for a continuous exchange of water between said tank and said enclosure, said enclosure having an open top end and a closed lower end wall and front and back walls,
a fish egg plate in said enclosure and on said back wall, said enclosure positioned in said tank with its open top end submerged in the water to provide fresh water into said other chamber to flow across said egg plate,
a dividing wall in said enclosure extending lengthwise thereof to define oppositely disposed chambers interconnected at the lower of said enclosure by said dividing wall being spaced from the lower end wall, and
an air stone in one of said chambers adjacent said front wall for causing water circulation downwardly in said other chamber across the egg plate and upwardly in said one chamber.

4,370,948

NIPPLE WATERER

Robert C. Atkins, 4548 Eisenhower Ave., Alexandria, Va. 22304

Filed Mar. 31, 1980, Ser. No. 135,547

Int. Cl.^{3} A01K *7/00*

U.S. Cl. 119—72.5 **5 Claims**

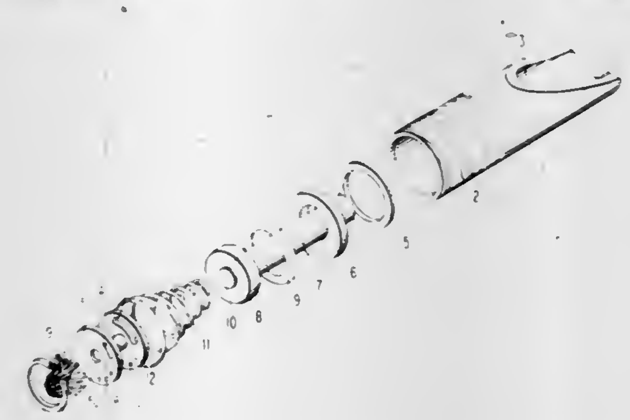

1. A nipple waterer comprising, a sleeve having an inlet end and an outlet end, a valve seat mounted in said sleeve intermediate the inlet and outlet ends, a valve head positioned on the inlet side of said seat, a stem integrally connected to said valve head and extending axially through said valve seat in a direction toward the outlet end of said sleeve, adjustable orifice means mounted in the inlet end of said sleeve; said adjustable orifice means comprising a first circular plate having an orifice therein, a second circular plate having an orifice therein, said plates being mounted in face-to-face relationship, said orifices being in communicating relationship to form an aperture therebetween, and means at the peripheral regions of said plates and extending therebetween for releasably holding the plates in an adjusted, angular relationship, whereby the size of the aperture may be varied, and a spring positioned between said adjustable orifice means and said valve head for biasing the valve head to the closed position against said seat.

4,370,949

WASTE HEAT RECOVERY SYSTEM

Ardell Beckett, 307 Moore Dr., R.R. #1, Ridgeville, Ontario, Canada (L0S 1M0)

Filed Feb. 8, 1980, Ser. No. 119,725

Claims priority, application Canada, Nov. 21, 1979, 340337

Int. Cl.^{3} F22B *33/00*

U.S. Cl. 122—20 B **13 Claims**

1. A heating plant incorporating at least one boiler, means for supplying fuel and air to said at least one boiler, a flue gas exhaust duct associated with said at least one boiler, the heating plant including a waste heat recovery unit having heat exchange surfaces therein and wherein the flue gas exhaust duct from said at least one boiler is operatively connected to said waste heat recovery unit for the circulation therethrough of hot flue gases in contact with the heat exchange surfaces thereof, means to allow flow of fluid through said waste heat recovery unit thereby to recover a portion of the heat energy in the flue gases; a heat exchanger; and a primary circuit connecting said at least one boiler in flow relation to said heat exchanger for the conveyance of the heat output of said at least one boiler thereto, a first fluid heating circuit being operatively connected to the heat exchanger, a second fluid circuit for connecting the waste heat recovery unit in flow relation with said first fluid heating circuit; control means including a control system and first and second control valve means for regulating, respectively, the flow through said primary circuit and the flow through the second fluid circuit to provide a desired temperature in the fluid flowing out of the heat exchanger via said first fluid heating circuit while assisting in maintaining the fluid flowing through the second fluid circuit and the waste

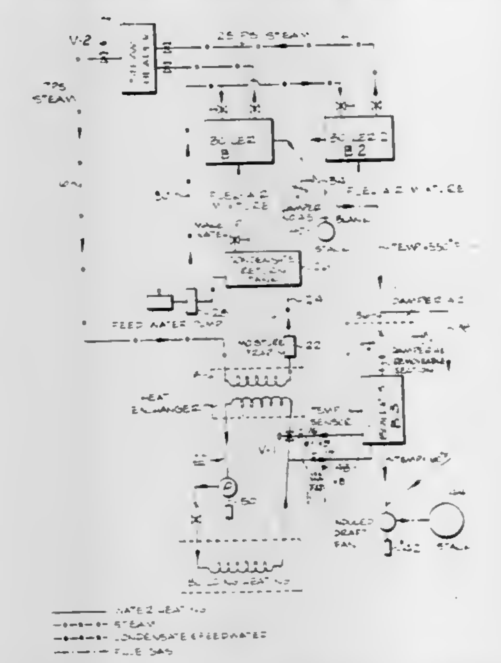

heat recovery unit above that temperature necessary to avoid excessive cooling of the flue gases within the waste heat recovery unit and consequent condensation of certain flue gas components on the heat exchange surfaces thereof, and wherein the control system is responsive both to the temperature of the fluid in the heat recovery unit and to the temperature of the fluid flowing from the heat exchanger via said first fluid heating circuit, said control system acting to substantially eliminate fluid flow through the second fluid circuit and the heat recovery unit when the temperature of the fluid in the latter is below a minimum selected temperature, and, after the minimum selected fluid temperature is reached, said control system being primarily responsive to the temperature of the fluid flowing out of the heat exchanger via said first fluid heating circuit.

4,370,950

ENGINE COOLING SYSTEM AND CONTROL VALVE ASSEMBLY PROVIDING MIXED OR UNMIXED HEAD AND BLOCK COOLING

Tatsumi Furukubo, Susono, Japan, assignor to Toyota Jidosha Kabushiki Kaisha, Toyota, Japan

Filed Nov. 27, 1981, Ser. No. 325,196

Claims priority, application Japan, Dec. 2, 1980, 55-169933

Int. Cl.^{3} F01P *3/02, 7/16*

U.S. Cl. 123—41.08 **30 Claims**

1. For an internal combustion engine comprising:
(a) a cylinder head formed with a head cooling jacket for cooling said cylinder head, said head cooling jacket being formed with a cylinder head inlet and a cylinder head outlet;
(b) a cylinder block formed with a block cooling jacket for cooling said cylinder block, said block cooling jacket being formed with a cylinder block inlet and a cylinder block outlet; and
(c) a radiator formed with an inlet and an outlet;
a cooling system, comprising:
(d) a first pump for impelling cooling fluid through said head cooling jacket from said cylinder head inlet towards said cylinder head outlet;
(e) a second pump for impelling cooling fluid through said block cooling jacket from said cylinder block inlet towards said cylinder block outlet;
(f) a block recirculation conduit system leading from said cylinder block outlet of said block cooling jacket so as to supply flow of cooling fluid, from a downstream part of said block recirculation conduit system, to said cylinder block inlet of said block cooling jacket;
(g) a main recirculation conduit system, an upstream part of which is communicated to said cylinder head outlet of said head cooling jacket, and a downstream part of which is communicated to said inlet of said radiator;
(h) a radiator output conduit system, leading from said outlet of said radiator to said cylinder head inlet of said head cooling jacket;
(i) a first junction assembly between said block recirculation conduit system and said main recirculation conduit system at upstream parts thereof, which at least sometimes allows flow between said part of said block recirculation conduit system and said part of said main recirculation conduit system;
(j) a second junction assembly between a downstream part of said block recirculation conduit system and a part of said radiator output conduit system, which at least sometimes allows flow between said part of said block recirculation conduit system and said part of said radiator output conduit system;

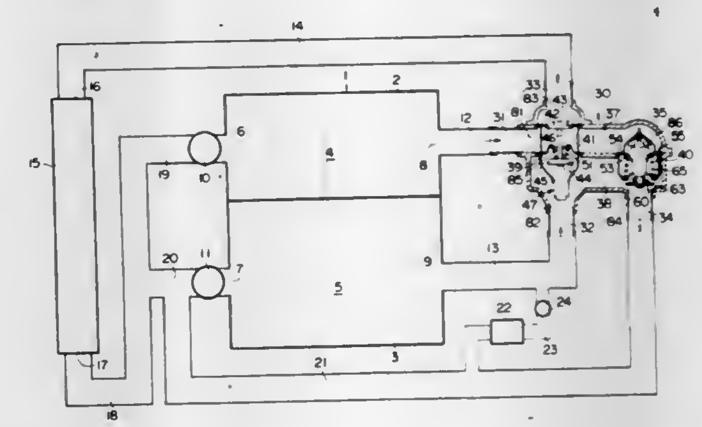

(k) and a mechanical non-electrical control valve assembly which is incorporated in one of said first junction assembly and said second junction assembly and which controls the allocation of flow through said head cooling jacket and flow through said block cooling jacket between said block recirculation conduit system and said main recirculation conduit system, according to a set of parameters which include the temperature of the cooling fluid passing out of said block cooling jacket;

said control valve assembly: when it detects a temperature of the cooling fluid flow passing out of said block cooling jacket of less than a first predetermined temperature, being so switched that it directs substantially all the cooling fluid flow through said head cooling jacket which is passing out through said cylinder head outlet and also substantially all the cooling fluid flow through said block cooling jacket which is passing out through said cylinder block outlet to flow into said upstream part of said block recirculation conduit system, said two cooling fluid flows being mixed within said block recirculation conduit system, not directing any substantial cooling fluid flow to flow into said upstream part of said main recirculation conduit system; when it detects a temperature of the cooling fluid passing out of said block cooling jacket of greater than said first predetermined temperature but less than a second predetermined temperature greater than said first predetermined temperature, being switched so that it directs substantially all the cooling fluid flow through said head cooling jacket which is passing out through said cylinder head outlet to flow into said upstream part of said main recirculation conduit system

and through said radiator, and so that it directs substantially all the cooling fluid flow through said block cooling jacket which is passing out through said cylinder block outlet to flow into said upstream part of said block recirculation conduit system; and, when it detects a temperature of the cooling fluid passing out of said block cooling jacket of greater than said second predetermined temperature, being so switched that it directs substantially all the cooling fluid flow through said head cooling jacket which is passing out through said cylinder head outlet and also substantially all the cooling fluid flow through said block cooling jacket which is passing out through said cylinder block outlet to flow into said upstream part of said main recirculation conduit system and through said radiator, said two cooling fluid flows being mixed within said main recirculation conduit system and within said radiator, not directing any substantial cooling fluid flow into said upstream part of said block recirculation conduit system.

4,370,951
LIQUID COOLED MULTI-CYLINDER INTERNAL COMBUSTION ENGINE
Colin T. Pomfret, Graz, Austria, assignor to Hans List, Graz, Austria
Filed Jun. 5, 1981, Ser. No. 271,090
Claims priority, application Austria, Jun. 13, 1980, 3151/80
Int. Cl.³ F01M *1/06*
U.S. Cl. 123—41.74 **5 Claims**

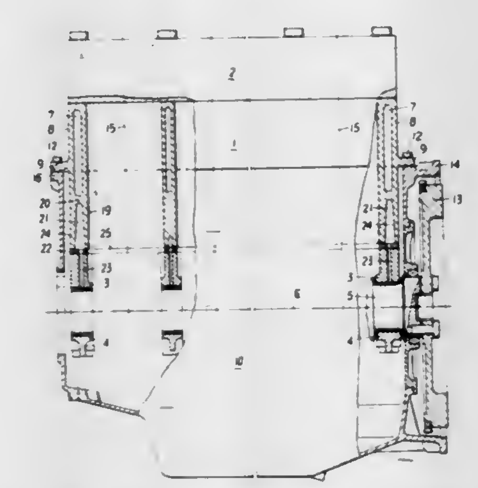

1. Liquid cooled multi-cylinder internal combustion engine, comprising a cylinder block with cylinder liners and a cooling jacket, a connecting flange running about said cooling jacket, a crankshaft and a crankcase, which extends above the axis of said crankshaft and which is fixed to said connecting flange, crankshaft main bearings each comprising an upper part and a lower part and being fixed to said cylinder block, and wherein the connecting surfaces of said cylinder block and said upper bearing parts are provided in the lower end plane of said cylinder liners, said cooling jacket being shorter than said cylinder liners, and conduits for the oil supply of the engine are formed in the end of said cylinder block adjacent said cooling jacket, which are open downwards, communicating with each other, and having at least approximately the same width as said cooling jacket, and a cover plate being provided between said cylinder block and said upper bearing parts, which tightly covers said conduits.

4,370,952
RECIPROCABLE PISTON INTERNAL COMBUSTION ENGINE WITH AT LEAST ONE CYLINDER BUSHING
Hermann Mettig, Cologne, and Rudolf Jeschar, Clausthal-Zellerfeld, both of Fed. Rep. of Germany, assignors to Klöckner-Humboldt-Deutz Aktiengesellschaft, Cologne, Fed. Rep. of Germany
Division of Ser. No. 927,884, Jul. 25, 1978, Pat. No. 4,253,431. This application Oct. 6, 1980, Ser. No. 194,563
Claims priority, application Fed. Rep. of Germany, Jul. 29, 1977, 2734254
Int. Cl.³ F02F *1/16*
U.S. Cl. 123—41.84 **3 Claims**

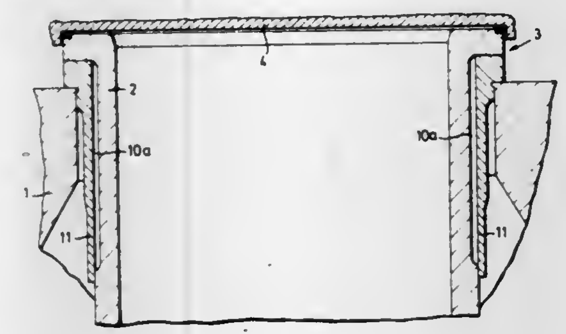

1. A reciprocable piston internal combustion engine which includes: an engine frame, a cylinder bushing inserted in said engine frame and having one end provided with a collar and being supported by said engine frame, said bushing together with said engine frame defining an annular chamber adapted to receive cooling water, a heat jacket operatively associated with said cylinder bushing and having a wall portion thereof arranged for contact with the content of said annular chamber, said heat jacket extending at least into the vicinity of said collar and while being adapted to receive and keep a liquid heat carrier therein having its inner surface so designed as to create a capillary effect adapted to permit such liquid heat carrier in said heat jacket to flow therein against the force of gravity in the longitudinal direction of said cylinder bushing said heat jacket being formed within said cylinder bushing.

4,370,953
CYLINDER TWO STROKE ENGINE WITH TORSIONAL RESONANCE CONTROL
Peter G. Van de Walker, Lake Villa, Ill., assignor to Outboard Marine Corporation, Waukegan, Ill.
Filed May 5, 1980, Ser. No. 146,257
Int. Cl.³ F02B *75/22*
U.S. Cl. 123—55 VS **11 Claims**

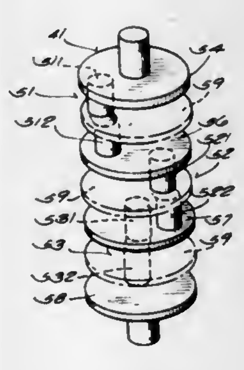

1. A two stroke engine comprising a V engine block having first and second cylinder banks each with first, second, and third cylinders, said banks being located at a bank angle within the range of from about 60° to about 90°, means for establishing a cylinder firing order wherein one of said three cylinders of said first bank is first fired, followed by firing of said one of said three cylinders of said second bank, followed by firing of one of the remaining two of said three cylinders of said first bank,

followed by firing of said one of the remaining two of said three cylinders of said second bank, followed by firing of the remaining one of said three cylinders of said first bank, and followed by firing of the remaining one of said three cylinders of said second bank, means for establishing a cylinder firing interval constituted by a repetitious cycle of crankshaft angles between firings including a first firing interval angle followed by a second firing interval angle, wherein the sum of said first firing interval angle and said second firing interval angle equals about 120°, and a crankshaft having first, second, and third crankpins respectively associated with said first, second and third cylinders of both said banks, each of said crankpins being spaced from each other at an angle of about 120° and each of said crankpins including a first portion associated with one of said cylinders in said first bank and a second portion associated with one of said cylinders in said second bank and located in axially adjacent relation to said first portion at a splay angle from said first portion, said splay angle being approximately equal to the absolute value of the difference between said first firing interval angle and said bank angle.

4,370,954
APPARATUS FOR STARTING INTERNAL COMBUSTION ENGINE
Tomohiro Asao, and Yosuke Takahashi, both of Osaka, Japan, assignors to Yanmar Diesel Engine Co., Ltd., Osaka, Japan
Filed May 9, 1980, Ser. No. 148,229
Claims priority, application Japan, Aug. 14, 1979, 54-111730[U]
Int. Cl.³ F01L *13/08;* **F02N** *3/02*
U.S. Cl. 123—182 **11 Claims**

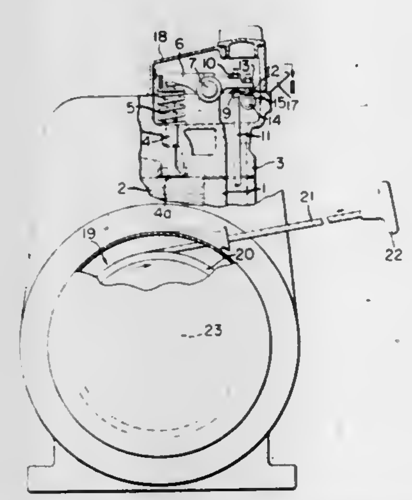

1. An apparatus for starting an internal combustion engine, said engine including crankshaft rotatably mounted therein, an exhaust valve, and a valve actuating mechanism which comprises a valve spring biasing said exhaust valve to a closed position, a valve lever rockably mounted having two ends, and a push rod operatively coupled with said crankshaft and engaging one of said ends of said valve lever, the other end of said valve lever engaging and operating said exhaust valve, said apparatus comprising: a recoil starter including a rope provided with a knob associated therewith, a reel around which said rope is wound and a clutch adapted to transmit the rotation of said reel to the engine crank shaft; and a decompression device including a cam having a flat surface adapted to forcibly maintain the exhaust valve in an open position by pushing said one end of the valve lever, a rotatably mounted shaft on which said cam is fixed, and a shaft spring resiliently and rotatively biasing said shaft in a direction desengaging said cam from said valve lever, the amount of push of said one end of said valve lever by said cam being set to be smaller than that provided by the push rod of the valve actuating mechanism, said shaft spring being sized to exert a resilient force smaller than the valve spring of said valve actuating mechanism for said exhaust valve such that said cam is held in position by engagement of said flat surface with said valve lever, whereby, when said valve lever is pushed at its one end by said cam, said flat surface of said cam engages said valve lever keeping said exhaust valve in the opened state against the resilient force of said valve spring, whereas, when said push rod pushes said one end of said valve lever, said cam is rotated and automatically disengaged from said valve lever by the biasing action of said shaft spring.

4,370,955
ROTARY VALVE FOR AN INTERNAL COMBUSTION ENGINE
John R. Ruggeri, 79 Apple Valley Rd., Stamford, Conn. 06903
Continuation-in-part of Ser. No. 21,444, Mar. 19, 1979, abandoned. This application May 11, 1979, Ser. No. 38,280
Int. Cl.³ F01L *7/00*
U.S. Cl. 123—190 BB **19 Claims**

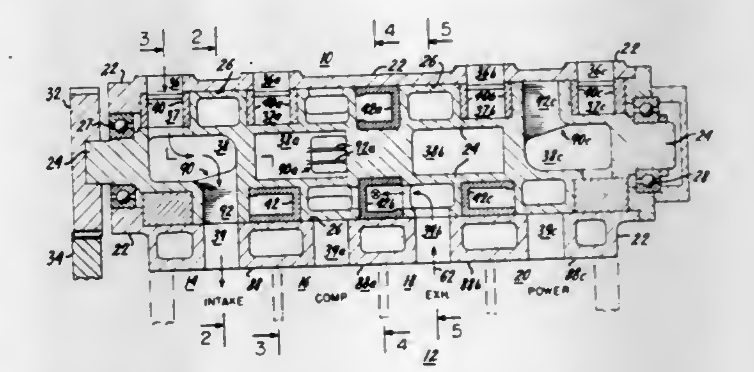

1. In a rotary valve for supplying a fuel-air mixture to and exhausting exhaust gas from an internal combustion engine, comprising
(a) an outer stationary support member formed with a hollow interior,
(b) an inner member housed within the hollow interior, and
(c) bearing means supporting the inner member for rotation about an axis,
the outer support member and the inner rotatable member being formed with duct means and porting means for selectively enabling and preventing the flow of intake and exhaust gases through the valve duct means in accordance with the angular position of the inner rotatable member with respect to the outer support member,
the improvement comprising impeller means mounted within the portion of the duct means formed within the inner rotatable member, the impeller means moving in close proximity to an engine cylinder location at the porting means for providing the flow of intake gases to the cylinder, the impeller means comprising means for producing a mixing and supercharging effect in said intake gases introduced through the porting means to the cylinder upon rotation of the inner rotatable member, the impeller means comprising a plurality of blades mounted in planes extending radially with respect to the axis of rotation.

4,370,956
ARRANGEMENT FOR HEATING THE OIL CONTAINED WITHIN AN OIL RESERVOIR OF A MACHINE OR OF AN INTERNAL COMBUSTION ENGINE OF A MOTOR VEHICLE
Gottfried Moser, Gladbach, and Hansjurgen Gross, Niederkassel, both of Fed. Rep. of Germany, assignors to Klockner-Humboldt-Deutz AG, Cologne, Fed. Rep. of Germany
Filed Jul. 1, 1980, Ser. No. 165,083
Claims priority, application Fed. Rep. of Germany, Oct. 6, 1979, 2940643
Int. Cl.³ F01M *1/00*
U.S. Cl. 123—196 AB **8 Claims**

1. An arrangement for heating the lubricating oil contained within an oil reservoir of a machine or of an internal combustion engine of a motor vehicle, the machine or engine having a

lubricating oil distribution system including means for circulating the lubricating oil at a predetermined pressure level from the oil reservoir into pressurized oil lines of the machine or engine, a heating system including a hydraulic pump for suctioning the oil from said reservoir and returning it thereto through an oil conduit into which said pump is coupled, at least one operating element coupled into said conduit at the pressure side of said pump for constricting the flow of oil through said conduit, said pump being coupled with a source of power to be thereby driven, said pump having a capacity to produce a pressure of about one order of magnitude higher than said

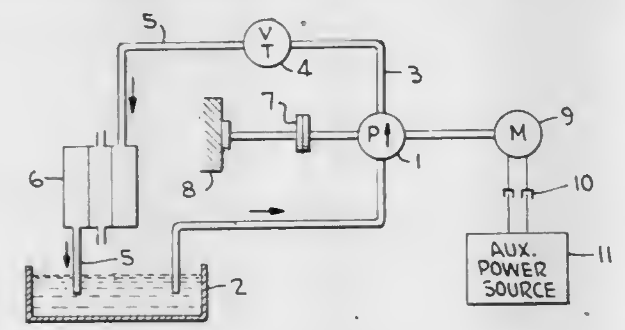

predetermined pressure level effected by said circulating means, said source of power comprising one of said engine and a driving motor coupled with an auxiliary power source, a first releasable coupler located between said engine and said pump and a second releasable coupler located between said pump and said auxiliary power source for selectively coupling said pump with said engine or with said auxiliary power source for regulating said heating system as said pump is selectively driven by said engine or by said motor or by neither said engine nor said motor, whereby the temperature of the oil within said reservoir may be controlled before and after operation of the machine or engine.

4,370,957
ASSEMBLY OF AUXILIARY EQUIPMENT FOR A WATER-COOLED INTERNAL COMBUSTION ENGINE
Othmar Skatsche; Johann Wagner, and Bertram Obermayer, all of Graz, Austria, assignors to Hans List, Graz, Austria
Filed Jan. 26, 1981, Ser. No. 228,219
Claims priority, application Austria, Jan. 24, 1980, 392/80
Int. Cl.³ F01M *1/00*
U.S. Cl. 123—196 AB **2 Claims**

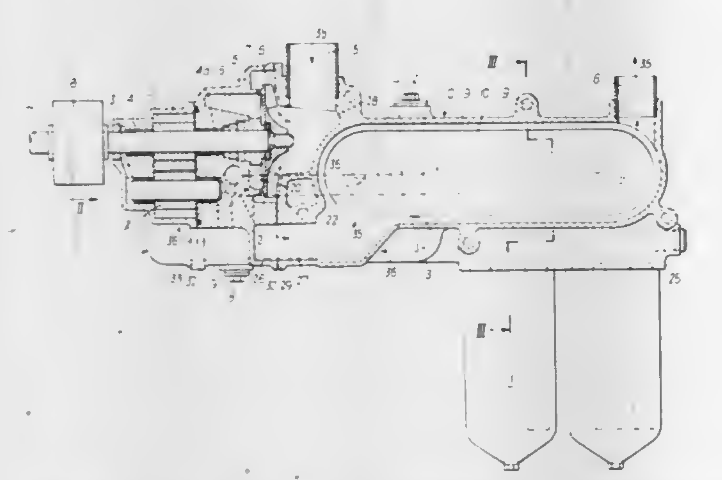

1. An assembly of auxiliary equipment for a water-cooled internal combustion engine, having an oil pump, a water pump, an oil cooler/oil filter unit, characterized in that the oil pump, the water pump and the oil cooler/oil filter unit are provided as separate interchangable subassemblies and are combined and interconnected into a constructional unit that can be mounted on the internal combustion engine, and said oil cooler/oil filter unit including a housing provided with a mounting surface for attachment to the internal combustion engine, first and second mating flanges on the housing and on the water pump being fastened together, third and fourth mating flanges on the water pump and on the oil pump being fastened together, and oil and water connecting lines extending through the flanges.

4,370,958
METHOD OF OPERATING AN AIR-COMPRESSING, SELF-IGNITING ENGINE FOR LIQUID FUEL
Franz Pischinger, Im Erkfeld 4, 5100 Aachen, Fed. Rep. of Germany, and Cornelis Havenith, Kerkrade, Netherlands, assignors to Franz Pischinger, Aachen, Fed. Rep. of Germany
Filed Jan. 9, 1980, Ser. No. 110,710
Claims priority, application Fed. Rep. of Germany, Jan. 13, 1979, 2901211
Int. Cl.³ F02B *3/08*
U.S. Cl. 123—276 **4 Claims**

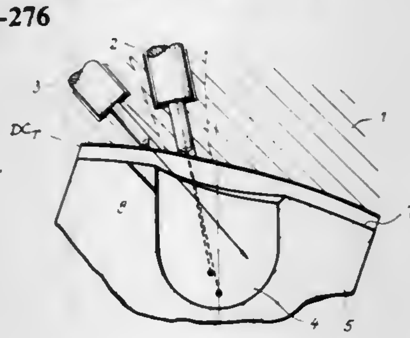

1. A method of operating an air-compressing, self-igniting internal combustion engine with liquid fuels, which engine includes a combustion chamber depression positioned centrally in the top surface of a piston and formed about a longitudinal axis through the piston for receiving injected fuel and for receiving rotating combustion air at the time of fuel injection from an air intake valve opening positioned in a cylinder head at a location laterally of the depression, said method comprising in combination the steps of:

injecting into said combustion chamber depression an ignition-prone fuel selected from the group consisting of oil, fuel, gas oil, and diesel fuel for initiating and maintaining fuel combustion; wherein the ignition-prone fuel is injected in two simultaneously injected diverging streams from a location positioned over but inside the boundaries of the depression, the location being angularly displaced by about ninety degrees with respect to the axis of the depression from a line through the center of the intake valve opening and the axis of the depression, and the two streams being directed at a relatively steep angle with respect to the axis toward the bottom of the depression;

injecting into said combustion chamber depression an ignition-adverse, oxygen-containing liquid alcohol selected from the group consisting of methanol and ethanol as a main fuel; wherein the ignition-adverse fuel is injected from a location over, but outside the boundaries of, the depression, which location is angularly spaced with respect to the axis of the depression from the line through the center of the intake valve opening and the axis of the depression by an angle less than that of the location of injection of the ignition-prone fuel and which location is positioned adjacent to the edge of the intake valve opening; the angle of injection of the ignition-adverse fuel being less steep with respect to the axis of the depression and being directed between the location of the ignition-prone fuel injection and the axis of the depression whereby separate droplet veils are formed for both fuels at least until self-ignition of the ignition-prone fuel;

timing the injection of the fuels so that the injections overlap by beginning the injection of the ignition-prone fuel prior to the injection of the ignition-adverse fuel; beginning the injection of the ignition-adverse fuel prior to the self-ignition of the ignition-prone fuel, and by injecting ignition-prone fuel during the entire duration of injection of the ignition-adverse fuel.

4,370,959
TWO STROKE CYCLE ENGINE WITH SUSTAINED POWER STROKE
Robert J. McNair, Jr., Cincinnati, Ohio, assignor to Avco Corporation, Greenwich, Conn.
Filed May 30, 1980, Ser. No. 154,744
Int. Cl.³ F02B *17/00*
U.S. Cl. 123—295 **14 Claims**

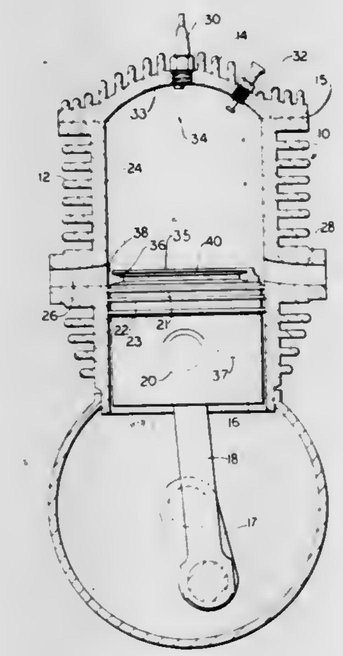

1. A two stroke cycle internal combustion engine of the type wherein there is included at least one cylinder member, a piston within the cylinder member reciprocable through a predetermined stroke volume, a cylinder head formed to provide a main combustion chamber closed at one end, the other end of said combustion chamber being the crown of said piston, said piston being movable within the sidewalls of said cylinder member from a top dead center position wherein said crown is adjacent said cylinder head to a bottom dead center position wherein said crown is remote from said cylinder head, the invention comprising:

fuel injection means for supplying a fuel-rich mixture to the main combustion chamber during the compression stroke wherein the piston moves to minimize the volume in the main chamber;

firing means for igniting the fuel-rich mixture near the top dead center position of the piston to bring about a power stroke preceded by a flame front propagating across the main chamber from an ignition point;

exhaust means for permitting the exhaust gases to escape the main combustion chamber near the end of the power stroke wherein the piston moves to the bottom dead center position;

a resonator cavity formed in and around the periphery of the piston at a location below the crown, said cavity being in communication with the main combustion chamber via a narrow circumferential slot formed between said cylinder wall and the top edge of said piston;

an intake port through said cylinder wall adjacent the crown of said piston as said piston approaches its bottom dead center position, said intake port being open when said piston is adjacent its bottom dead center position, said intake port being closed when said piston is not adjacent said bottom dead center position; and

means for supplying air to said main chamber and said resonator cavity through said intake port during the period said piston is adjacent said bottom dead center position, said period being at the conclusion of the power stroke of said engine, said air supplying means causing air to flow through said resonator cavity and said chamber and over said piston crown and through said exhaust means at the conclusion of each power stroke thereby serving to cool the crown of said piston during each recharging of the main chamber.

4,370,960
ENGINE SPEED CONTROL SYSTEM
Kazutoshi Otsuka, Hiroshima, Japan, assignor to Toyo Kogyo Co., Ltd., Hiroshima, Japan
Filed Nov. 5, 1980, Ser. No. 204,252
Claims priority, application Japan, Nov. 6, 1979, 54-144026
Int. Cl.³ F02M *3/00*
U.S. Cl. 123—339 **4 Claims**

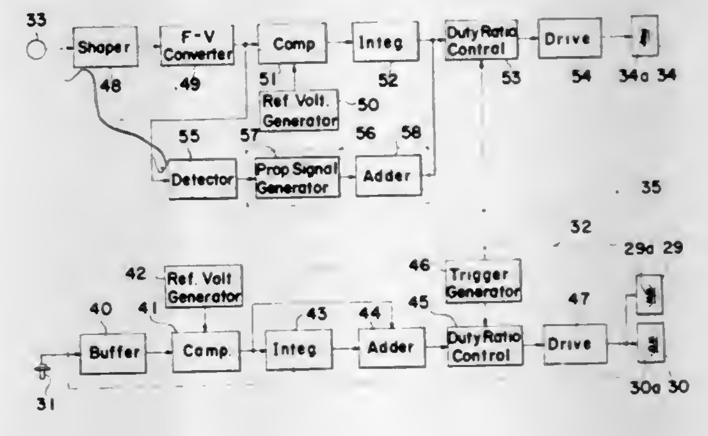

1. An engine idle control system for an automobile internal combustion engine comprising a source of a combustible air fuel mixture, a mixture intake passage means for supplying said combustible mixture from said mixture source to said engine, and an exhaust passage means through which exhaust gases formed in said engine as a result of combustion of said combustible mixture are discharged to the atmosphere, said idle control system comprising an actuator means for controlling the engine speed to a predetermined value; a speed sensor for detecting the engine speed and for generating an electric output signal indicative of the actual engine speed; a control means connected to said speed sensor and said actuator means for receiving said electric output signal from said speed sensor and for operating said actuator means so as to maintain the engine speed during idling at said predetermined speed, said control means having a first means for generating a control signal for causing said actuator means to control the engine speed in response to an input signal to the first means, a second means for comparing said electric output signal from said speed sensor with a reference signal representative of said predetermined engine speed and for generating a difference signal indicative of the difference between the actual engine speed and said predetermined engine speed, a third means for detecting the magnitude of change occurring in said electric output signal from said speed sensor and for generating an output signal only when said magnitude of change exceeds a predetermined magnitude, wherein said detecting means includes a timer means for generating an output signal at a predetermined time interval and a comparator means for comparing said output signal generated by said speed sensor at a certain time with the output signal generated by said speed sensor when said predetermined time interval has passed beyond said certain time and for generating an output signal when the difference therebetween is higher than a predetermined value, and a fourth means for adding said difference signal and said electric output signal from said comparator means of said third means and for generating an output signal indicative of the sum of said difference signal and said electric output signal from said comparator means of said third means, said output signal from the fourth means being supplied to the first means as said input signal to the first means, whereby said control signal is changed so as to cause the operation of said actuator to be increased when the magnitude of detected change of the engine speed is large.

4,370,961

FUEL RATE CONTROL FOR INTERNAL COMBUSTION ENGINES

Derek Brown, 7 Southlands, Eighton Banks, Gateshead 9, Tyne & Wear NE9 7BP, England

Filed Sep. 15, 1980, Ser. No. 186,963

Int. Cl.³ F02D *31/00*

U.S. Cl. 123—352 **7 Claims**

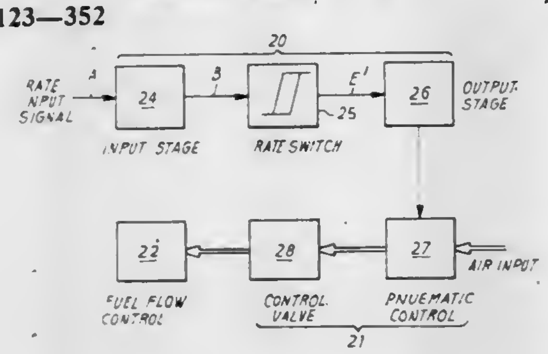

1. In a motor vehicle equipped with power take-off apparatus driven by an internal combustion engine and including a rotary power take-off output shaft, the improvement comprising: sensor means arranged and adapted to produce pulses at a repetition rate proportional to the speed of rotation of said rotary output shaft; rate discriminating circuitry operatively coupled to said sensor means to receive said pulses and discriminate between pulse repetition rates above and below at least one predetermined rate; rate level indicating means coupled to said rate discriminating circuitry means to provide a binary output signal indicative by the prevailing level thereof of the relation of the pulse repetition rate to said at least one predetermined rate; and flow rate control means coupled to said rate level indicating means and responsive to said binary output signal to control a flow of fuel to said internal combustion engine, said flow rate control means being such as to reduce said flow of fuel in response to the level of said binary output signal indicating a pulse repetition rate exceeding at least said one predetermined rate, said rate discriminating circuitry including an astable multivibrator coupled to said sensor means so as to be inhibited by pulse repetition rates exceeding said one predetermined rate, and said rate level indicating means including a monostable circuit connected to said astable multivibrator so as to reset only in response to said astable multivibrator being inhibited for a predetermined length of time.

4,370,962

SYSTEM FOR PRODUCING A PULSE SIGNAL FOR CONTROLLING AN INTERNAL COMBUSTION ENGINE

Akio Hosaka, Yokohama, Japan, assignor to Nissan Motor Company, Ltd., Yokohama, Japan

Filed Mar. 23, 1981, Ser. No. 246,618

Claims priority, application Japan, Mar. 24, 1980, 55-36259

Int. Cl.³ F02P *5/04;* **F02D** *5/02*

U.S. Cl. 123—416 **16 Claims**

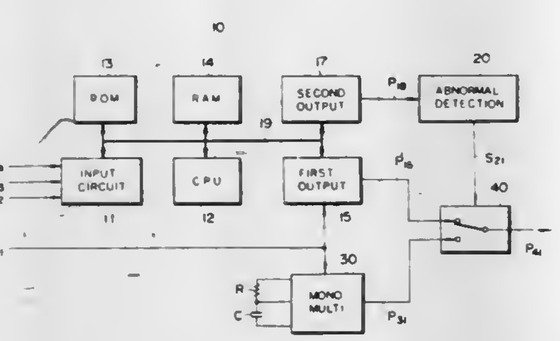

1. A system for normally producing a first pulse signal for controlling an automotive internal combustion engine in response to engine operating parameters, such as engine crankshaft reference angle position pulses, air intake volume and engine temperature, and for producing a second pulse signal for controlling the engine in the event of a failure of circuitry responsive to the parameters, comprising:

(A) a digital computer responsive to the parameters for controlling the derivation of engine control pulses in accordance with the parameters, said computer including:

(a) a first output circuit responsive to the reference angle pulses for deriving engine control pulses, and

(b) a second output circuit for deriving a marker pulse signal having a regular pulse interval; and

(B) a circuit for producing a dummy control signal in response to a computer malfunction, including:

(a) a first retriggerable monostable multivibrator responsive to the marker pulse signal derived by said second output circuit, said first retriggerable monostable multivibrator deriving a first switching signal in response to the pulse interval of the pulse signal produced by the second output circuit exceeding a first predetermined length of time;

(b) a monostable multivibrator responsive to the reference angle pulse signal for deriving further control pulses synchronized with the reference angle position pulses; and

(c) switching means having an output terminal and an input connected to be controlled by said first retriggerable monostable multivibrator for normally coupling the control pulses derived by said first output circuit to the output terminal and for coupling the further pulses derived by said monostable multivibrator to the output terminal while said first switching signal is derived.

4,370,963

IGNITION TIMING CONTROL SYSTEM FOR INTERNAL COMBUSTION ENGINE

Toshio Iwata, and Kiyoshi Ookawa, both of Himeji, Japan, assignors to Mitsubishi Denki Kabushiki Kaisha, Tokyo, Japan

Filed May 20, 1980, Ser. No. 152,114

Claims priority, application Japan, May 25, 1979, 54-66011

Int. Cl.³ F02P *5/04*

U.S. Cl. 123—425 **4 Claims**

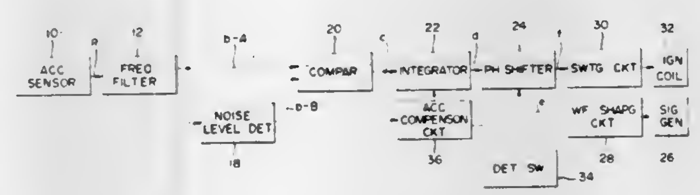

1. An ignition timing control system comprising:

reference ignition timing generator means for generating a reference ignition timing signal including reference ignition timing points;

an ignition coil;

switching means responsive to said reference ignition timing generator means for intermitting a current supplied to said ignition coil;

phase shifting means receiving said reference ignition timing signal for transmitting said reference ignition timing signal to said switching means;

knocking detector means for detecting the occurrence of knocking in an internal combustion engine and for generating a pulsed output representative thereof and for generating a null output in the absence of knocking:

integrator means for receiving said outputs from said knocking detector means, for generating a null voltage upon receipt of said null output, and for integrating said pulsed output upon receipt thereof and generating an integrated voltage dependent upon said knock signal components;

said phase shifting means being connected to said integrator means and being responsive to receipt therefrom of said null voltage for transmitting said reference ignition timing signal to said switching means, and said phase shifting means being responsive to receipt from said integrator means of said integrated voltage for retarding the phase of said reference ignition timing signal by an amount dependent upon the level of said integrated voltage;

detection means for detecting abrupt acceleration of the internal combustion engine; and

acceleration compensation circuit means, connected to said integrator means, for, in response to a detection of abrupt acceleration by said detection means, shortening the time constant of said integrator means and rapidly increasing said integrated voltage, and thereby for increasing the amount of retard of the phase of said reference ignition timing signal.

4,370,964

SPARK IGNITION TIMING CONTROL SYSTEM FOR AN INTERNAL COMBUSTION ENGINE

Shigeo Muranaka, Yokohama; Kunihiko Sugihara, Tokyo, and Kiyoshi Takeuchi, Yokohama, all of Japan, assignors to Nissan Motor Company, Limited, Yokohama, Japan

Filed Aug. 4, 1980, Ser. No. 174,923

Claims priority, application Japan, Aug. 6, 1979, 54-100111

Int. Cl.³ F02P *5/04*

U.S. Cl. 123—425 **12 Claims**

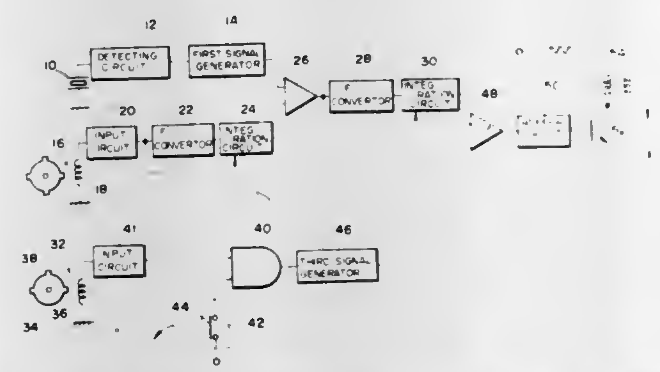

1. A spark ignition timing control system for an internal combustion engine having a plurality of combustion chambers comprising:

a knock detection means for generating a first signal indicative of a retarding ratio of spark advance angle which corresponds to a magnitude of detected knocking; and

a means for detecting an engine load condition and operable to distinguish whether the engine load is higher than a predetermined level and to retard the spark advance angle of an ignition signal for a first group of said chambers when the detected load is higher than said predetermined level whereby the spark advance angle of a second group of said chambers, comprising at least one of said chambers, becomes advanced relative to the first group under high load conditions.

4,370,965

IGNITION DISTRIBUTOR FOR INTERNAL COMBUSTION ENGINES

Horst Grossner, Berglen; Detlef Kaminski, Kornwestheim, and Paul Schwerdt, Freudenstadt, all of Fed. Rep. of Germany, assignors to Daimler-Benz Aktiengesellschaft, Stuttgart, Fed. Rep. of Germany

Filed Apr. 27, 1981, Ser. No. 257,467

Claims priority, application Fed. Rep. of Germany, Apr. 24, 1980, 3015807

Int. Cl.³ F01L *1/34;* **F02P** *1/00*

U.S. Cl. 123—426 **7 Claims**

1. An ignition distributor for an internal combustion engine having an electronic ignition control means, the distributor including a distributor shaft means driven by the engine, and a rotor means, characterized in that means are provided for changing a phase relationship between the distributor shaft means and the rotor means including a control disk mounted on the distributor shaft means so as to be rotatable relative thereto, the rotor means is fixedly mounted to the control disk, means for transmitting a rotation of the distributor shaft means to the control disk, and means for regulating a rotational speed

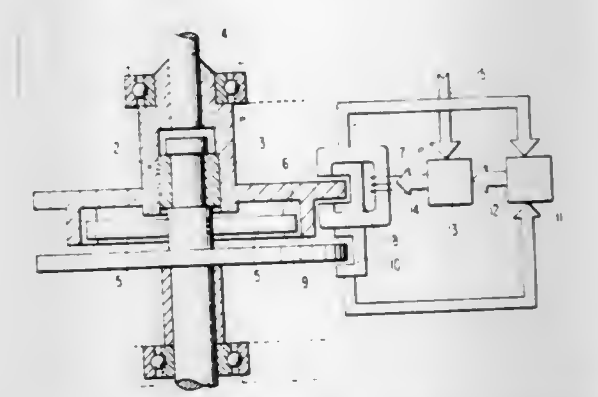

of the control disk in accordance with a difference between an actual value of a phase displacement and a desired value of a phase displacement for a given operating condition of the engine.

4,370,966

FUEL FEED SYSTEM

Masahiro Saruta, and Hiroki Uchiyama, both of Iwata, Japan, assignors to NTN Toyo Bearing Co., Ltd., Osaka, Japan

Filed Mar. 26, 1979, Ser. No. 24,166

Int. Cl.³ F02M *39/02, 45/00*

U.S. Cl. 123—447 **2 Claims**

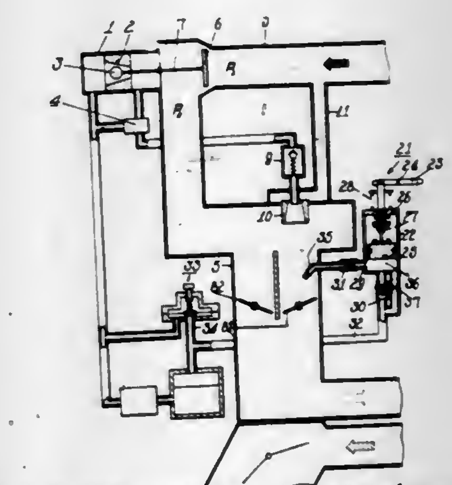

1. In a fuel injection system for an internal combustion engine operating with continuous fuel injection into a suction pipe, said suction pipe including a first portion and a second portion downstream of said first portion, a throttle valve in said second portion, said system including a fuel measuring gate having a fuel control aperture, a sensor member positioned between said first and second portions and being moveable in proportion to the quantity of air flowing therebetween, said sensor member being operatively coupled to said fuel control gate to determine the size of said aperture to control the amount of fuel therethrough, a bypass line coupled between said first and second portions, and a pressure regulator coupled to said fuel measuring gate to supply fuel thereto at a predetermined pressure, said regulator having a return pipe, said continuous fuel injection from said fuel measuring gate being into said second portion; the improvement comprising

an accelerator pump interlocked to said throttle valve for injecting additional fuel at a positive pressure through a delivery port during acceleration, said accelerator pump being coupled to and drawing fuel from said return pipe, said delivery port opening into said second portion at a position different than said continuous injection.

4,370,967
FUEL INJECTION SYSTEM

Karl Gmelin, Ingelfingen; Peter Stiefel, Ditzingen, and Klaus-Jürgen Peters, Affalterbach, all of Fed. Rep. of Germany, assignors to Robert Bosch GmbH, Stuttgart, Fed. Rep. of Germany

Filed Jul. 20, 1979, Ser. No. 59,361
Claims priority, application Fed. Rep. of Germany, Sep. 27, 1978, 2841920
Int. Cl.[3] F02M *69/00*
U.S. Cl. 123—452 **15 Claims**

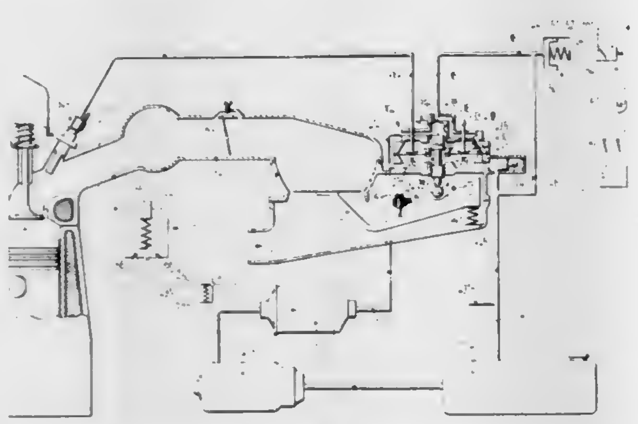

1. A fuel injection system for mixture-compressing, externally ignited internal combustion engines arranged to inject fuel into an intake manifold, said system including an air flow rate-responsive member and an arbitrarily actuatable throttle valve, said air flow rate-responsive member being moved in accordance with the quantity of air flowing therethrough and arranged to displace a control slide mounted in a metering and distribution valve disposed in a fuel supply line and thereby meter a quantity of fuel from a predetermined point which corresponds to the air quantity, said metering operation arranged to take place at a constant pressure difference in that one control valve each is inserted into the fuel flow downstream of said metering points, further wherein each said valves have a flow passage cross section which is variable by means of a yielding member which defines plural, pressurized chambers, said pressure within said chambers adapted to move said yielding member in the direction of opening the control valves, further wherein said control slide includes an end face which projects into another pressure chamber to open a flushing line which communicates with flushing channels that branch off from said fuel supply line, said flushing line and flushing channels being arranged to connect said other pressure chamber with said control valves and further that downstream of an uncoupling throttle a hydraulic reservoir is disposed in a control pressure line, said reservoir including a diaphragm arranged to open a flushing valve which in turn opens an outlet line from each individual injection valve to a return flow line and wherein above a certain fuel pressure the electrical circuit of a starter motor is closable by means of an electrical pressure switch actuatable in accordance with the fuel pressure in the control pressure line.

4,370,968
ELECTRONICALLY CONTROLLED, FUEL INJECTION METHOD

Takayoshi Nakatomi, Susono, Japan, assignor to Toyota Jidosha Kogyo Kabushiki Kaisha, Toyota, Japan

Filed Nov. 20, 1980, Ser. No. 208,814
Claims priority, application Japan, Jul. 25, 1980, 55/101092
Int. Cl.[3] F02B *3/00*
U.S. Cl. 123—488 **5 Claims**

1. An electronically controlled fuel injection method for controlling a fuel injection valve of an intake system by electric signals characterized in that: from an input level X_{n-1} to be fed into a computation section from sensors at a previous fuel injection rate computation time T_{n-1}, an input level X_n to be fed into said sensors at a present fuel injection rate computation time T_n, a delay time until a physical amount to be detected reaches an input point in the computation section by way of said sensors, and a time A_n at which a cylinder to which

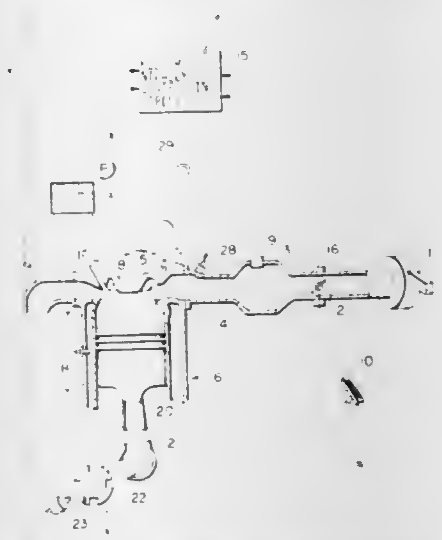

a fuel is supplied by an amount based on the present fuel injection rate computation reaches a bottom dead center on a subsequent intake stroke, the following equation is computed;

$$C_n = (X_n - X_{n-1}) \cdot \frac{1}{T_n - T_{n-1}} \cdot (\tau + A_n - T_n) + X_n$$

and, C_n is used as data on said physical amount for executing a present fuel injection rate computation.

4,370,969
PROPANE AUTOMOTIVE FEED SYSTEM

Neal Zarrelli, 200 Central Park S., New York, N.Y. 10017; Joseph V. Bocassi, and Robert S. Miller, both of Garnerville, N.Y., assignors to Neal Zarrelli, New York, N.Y.

Filed Mar. 27, 1981, Ser. No. 248,323
Int. Cl.[3] F02M *21/02, 29/00*
U.S. Cl. 123—525 **19 Claims**

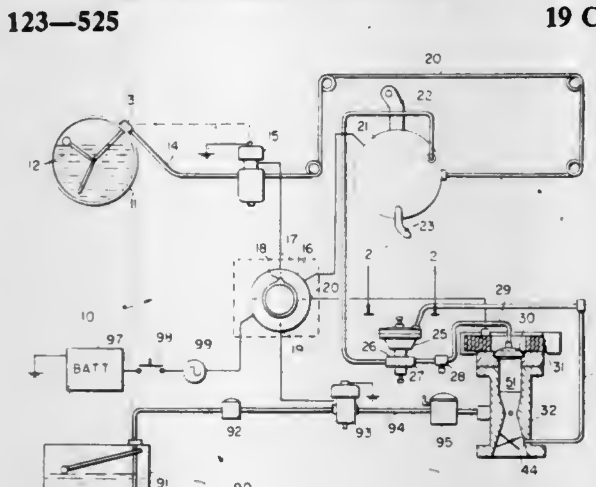

1. A device for providing propane gas as a secondary fuel to a carburetor of an internal combustion engine utilizing a primary fuel, said device comprising, a body portion being formed with a plurality of outlet holes for the propane, said body portion comprising a cover plate being formed with said outlet holes, said holes being radially disposed from said inlet orifice, said inlet conduit being centrally disposed and extending upwardly from the body portion, and means to mount said body portion downstream of the carburetor air filter intake and upstream of the primary fuel intake, inlet conduit means being formed with an inlet orifice and being mounted on and communicating with said body portion to feed gaseous propane to said body portion and into said holes, said air filter being annular-shaped, and said mounting means comprising a bracket interconnecting said air filter with said body portion so that said inlet conduit is disposed in the center of said air filter, said cover plate being shaped and downwardly disposed so that said outlet holes direct the propane gas outwardly and downwardly from the cover plate, wherein said propane and air admix adjacent said holes so as to provide a propane-air mixture to the carburetor.

4,370,970
APPARATUS FOR SUPPLYING A FUEL/AIR MIXTURE TO AN INTERNAL COMBUSTION ENGINE

Paul R. Kunz, Bern, Id. 83220

Filed Jan. 15, 1980, Ser. No. 112,351
Int. Cl.[3] F02M *31/00*
U.S. Cl. 123—557 **24 Claims**

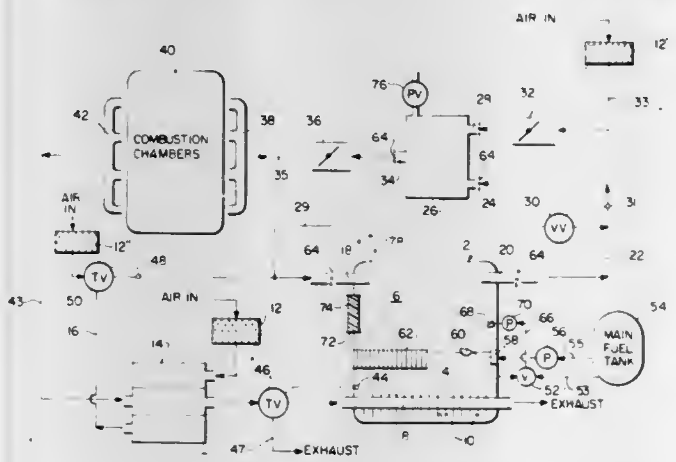

1. Apparatus for supplying a fuel/air mixture to an internal combustion engine comprising:

(a) a fuel chamber comprising a lower portion for containing a body of volatile liquid fuel in a substantially quiescent state and an upper portion defining an enclosed vapor space free of liquid fuel during normal operation above said body of said liquid fuel;

(b) heating manifold means extending through said lower chamber portion for conducting hot exhaust gases therethrough in order to heat a body of volatile liquid fuel therein;

(c) means comprising an inlet and an outlet opening directly into said enclosed vapor space for drawing an air stream through said enclosed vapor space and entraining fuel vapors in said air stream without said air stream passing through said body of liquid fuel and without liquid fuel being entrained in said air stream;

(d) means for passing said air stream in heat exchange relation with hot exhaust gases to raise the temperature of the air stream prior to drawing the air stream through said vapor space;

(e) means for mixing said fuel vapor-containing air stream with additional air to produce a combustible fuel/air mixture;

(f) means for conveying said combustible fuel/air mixture to a combustion chamber of an internal combustion engine;

(g) means for preventing entry of sparks or flame into said enclosed vapor space; and

(h) means comprising two apertures located in opposite walls of said fuel chamber from each other, each aperture communicating between said enclosed vapor space and the ambient atmosphere, and each aperture being closed by a resilient blowout plug ejectable from said aperture if the pressure in said chamber exceeds a predetermined level.

4,370,971
APPARATUS FOR REMOVING CONTAMINANTS FROM CRANKCASE EMISSIONS

Elmer W. Bush, 2010 Trimble Way, Sacramento, Calif. 95825

Filed Sep. 8, 1980, Ser. No. 185,051
Int. Cl.[3] F02M *25/06*
U.S. Cl. 123—573 **8 Claims**

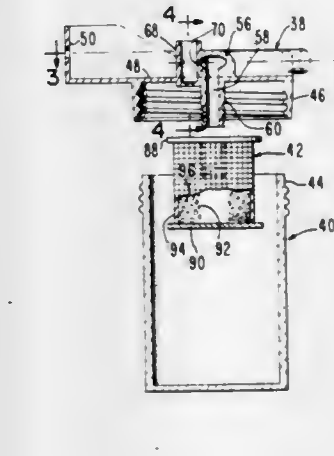

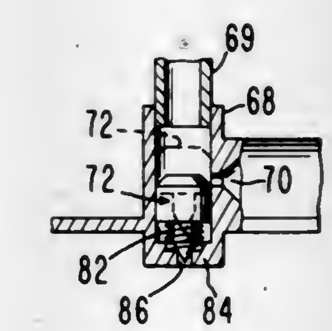

1. Apparatus for processing crankcase emissions of an internal combustion engine having an intake manifold comprising: a container having an inlet port, an outlet port, and an ambient air intake port, the ports communicating with the interior of the container, said inlet port adapted to receive crankcase emissions from said engine, there being means in the container for separating the crankcase emissions into liquid, solid and gaseous fractions, the outlet port adapted to be coupled to the intake manifold of the engine so that the interior of the container will be subject to the vacuum of the intake manifold; a valve member; means coupled with the container for mounting the valve member for movement into and out of an operative position closing said air intake port; means for providing fluid communication between the interior of said container and said valve member so that said valve member is movable out of said operative position as a function of the vacuum in said container;

and means for biasing said valve member toward said operative position.

4,370,972
ATTACHMENT MEMBER FOR SECURING THE ENDS OF CABLES IN A COMPOUND BOW

William R. Stewart, and Gary Simonds, both of Gainesville, Fla., assignors to Victor United, Inc., Chicago, Ill.

Filed Aug. 6, 1980, Ser. No. 175,890
Int. Cl.[3] F41B *5/00*
U.S. Cl. 124—23 R **11 Claims**

7. A compound archery bow having wheels eccentrically mounted upon pivot pins disposed adjacent the bow limb tips, a cable passing around said wheels and having free ends attached adjacent said wheels, a cable end attachment member mounted upon at least one said pivot pin, said attachment member including a body having a base section provided with a cable passageway therethrough for longitudinally adjustably receiving a cable end therein, lock means selectively engageable with said cable end within said base section passageway,

said body including two opposite faces joined by a peripheral edge, said edge having a plurality of intersecting walls, said lock means including a threaded opening extending from another one of said walls to said cable passageway, a threaded lock device insertable within said opening, said body provided

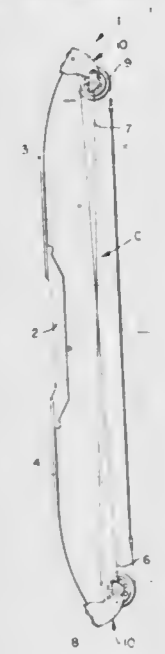

with a transverse anchor bore extending therethrough between said two opposite faces and disposed through said cable passageway, said threaded opening communicating with said bore, and a pivot section integral with said section and having means adapted to receive said pivot pin.

4,370,973
SPACE HEATING STOVE WITH STRESS RELIEVING WALLS
Anthony R. Bolanos, 2725 E. Dorchester Pl., Charlotte, N.C. 28209
Filed May 30, 1980, Ser. No. 154,828
Int. Cl.^{3} F24C *1/00*
U.S. Cl. 126—58 **1 Claim**

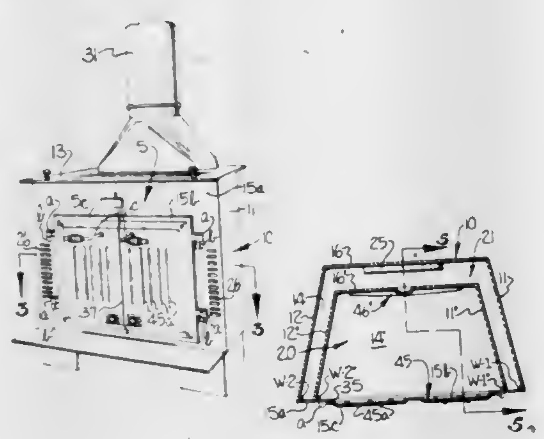

1. A space heating, wood burning stove comprising:
a plurality of wall means, defining a combustion chamber, each formed of steel plate having a substantially uniform thickness, and including a front wall comprising a substantially vertical panel having an access opening therethrough for insertion into said combustion chamber, a pair of doors normally closing said access opening and being provided with proximal normally abutting substantially vertical side edges thereon, said panel and said doors being of substantially the same thickness, and hinge means pivotally connecting distal side edge portions of said doors to said panel and including hinge elements pivotally supporting said doors,
welded joints securing said hinge elements to said panel, and means for controlling distortion in said doors and for protecting said welded joints against excessive stress and comprising a concavo-convex area forming a limited portion of the area of said one wall and defined by a plurality of elongate, generally parallel striations, with at least one of the striations being concave when viewed from one side of said one wall and with at least one other of said striations being convex when viewed from the same side of said one wall, said concavo-convex area being of generally sinusoidal cross-sectional configuration.

4,370,974
INVERTED CHANNEL FOCUSING SOLAR COLLECTOR
Donald R. Maxey, 22522 Shiloh Church Rd., Boyds, Md. 20720
Filed Mar. 12, 1980, Ser. No. 129,649
Int. Cl.^{3} F24J *3/02*
U.S. Cl. 126—439 **15 Claims**

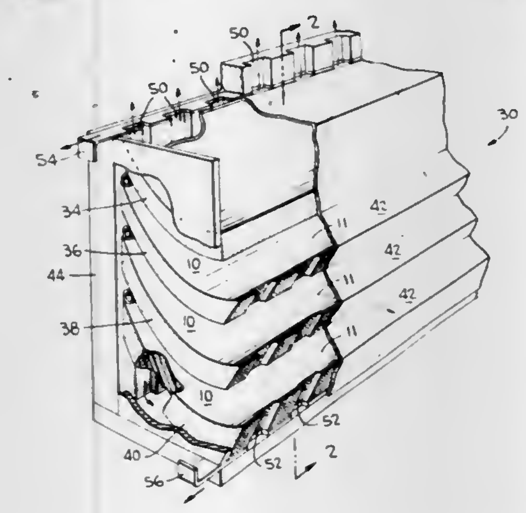

1. A solar device comprising a horizontally oriented radiant and thermal energy absorber and a collector having two reflective curved planar surfaces curving downward from said absorber from a common side of a vertical plane drawn tangent to said absorber, one of said planar surfaces curving downward from one side of said absorber, and the other of said planar surfaces curving downward from the opposite of said one side of said absorber and each being in direct thermal conductive contact with said absorber, said curved planar surfaces supported by said horizontally oriented absorber, wherein the lowermost of said curved reflective surfaces approaches a plane of horizontal tangency sufficiently forward of the horizontal tangency of the uppermost reflective surface to delineate an aperture plane for the entrance of solar radiation which has an optimum angular inclination for the latitude; said reflective surfaces conforming essentially with the geometry of a cusp of the second kind in that they would intercept along a line of double tangency to a common reference plane if extended above said horizontally mounted radiant and thermal energy absorber.

4,370,975
APPARATUS PROMOTING FLOW OF A BODY FLUID IN A HUMAN LIMB
Edward S. Wright, 837 Larchmont Rd., Pittsburgh, Pa. 15243
Filed Aug. 27, 1980, Ser. No. 181,712
Int. Cl.^{3} A61H *1/00*
U.S. Cl. 128—64 **5 Claims**

1. Apparatus for promoting flow of a body fluid from one end of a human limb to the opposite end, comprising a double wall sheath for receiving such a limb, the outer wall of the sheath being relatively inelastic and the inner wall being flexible with an air chamber therebetween, said chamber being separated into a plurality of separate inflatable cells encircling said inner wall with the outer wall of each cell provided with an opening, a source of air under pressure, tubes connecting said source with said openings, a plurality of normally closed valves respectively connected with respective of said tubes for valving the respective tubes open and closed independently, adjustable timing means operatively connected with the valves for opening said valves for independently adjustable periods of

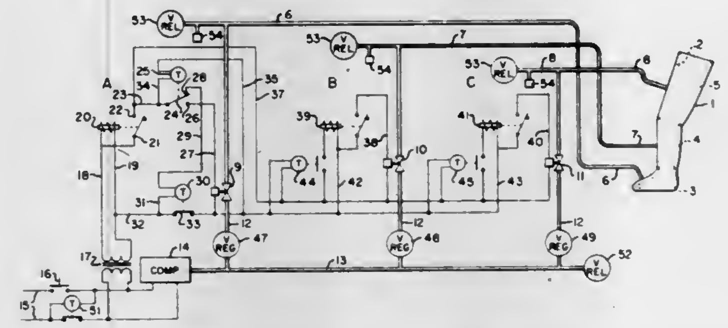

time to inflate said cells for independently adjustable periods of time and then releasing the air pressure from all of the cells, and pressure regulating means connected with said tubes for delivering progressively less air pressure to each successive cell from one end of said sheath to the other end.

4,370,976
DYNAMIC FOAM ORTHOSIS
Joseph Wanchik, Harper Woods, and Joseph M. Gabriele, Fenton, both of Mich., assignors to Contour Fabricators, Inc., Grand Blanc, Mich.
Filed Jun. 3, 1980, Ser. No. 156,253
Int. Cl.^{3} A61F *5/10*
U.S. Cl. 128—77 **4 Claims**

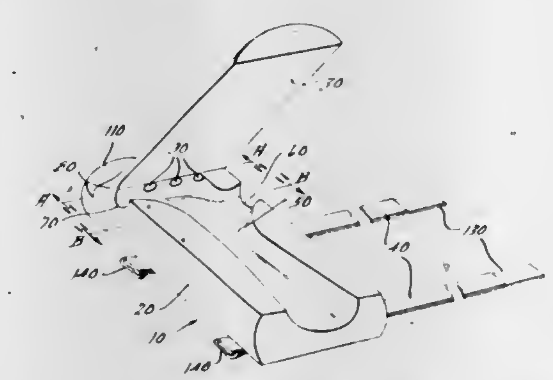

1. A device for use in providing active forces necessary to substitute for decreased, absent, or abnormal muscle function in a wrist and hand comprising:
an unsupported, relatively resilient, cellular foam base contoured with a cavity adapted to mate with and partially support the subject wrist and hand and adjoining forearm, and wherein said base contains three holes therethrough to allow for placement of the patient's middle three fingers,
an unsupported, relatively resilient, cellular foam cover formed integrally with said base and movable with respect to said base from a closed position in which said cover is in engagement with said base to an open position in which the contoured cavity of said base is exposed so as to allow the subject wrist and hand to be placed therein, and
at least one restraining strap means for holding said cover in engagement with said base once the subject wrist and hand have been placed in the contoured cavity of said base,
said device providing active forces on the subject wrist and hand which change as the position of the subject wrist and hand changes.

4,370,977
KNEE AND ELBOW BRACE
Donald M. Mauldin, and Richard E. Jones, III, both of Dallas, Tex., assignors to Kenneth D. Driver, Dallas and Melvin L. Stills, Lewisville, both of, Tex., part interest to each
Filed May 4, 1981, Ser. No. 260,075
Int. Cl.^{3} A61F *3/00*
U.S. Cl. 128—80 F **17 Claims**

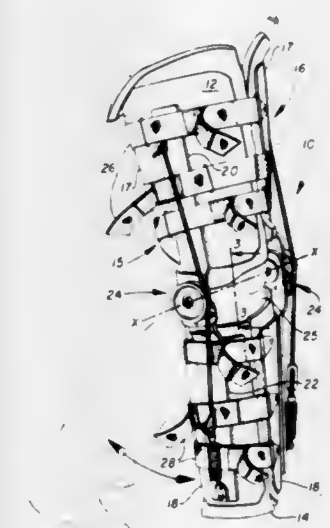

1. The knee brace comprising:
a thigh plate shaped to conform to the thigh of the leg;
a calf plate shaped to conform to the calf of the leg;
said thigh plate and calf plate being positioned on the thigh and calf when the knee brace is mounted on the leg so that the center lines of said thigh and calf plates lie on the mid-lateral line of the leg;
a thigh stay secured on the outer surface of said thigh plate and extending to a first hinge portion of a hinge moment adjacent the knee joint when positioned on the leg;
a calf stay secured on the outer surface of said calf plate and extending to a second hinge portion of said hinge member adjacent the knee joint when positioned on the leg;
means for limiting the pivotal motion of said hinge member to confine the motion of the joint within a preselected arc including an arc of zero degrees to immobilize the knee and for establishing a predetermined angular relationship between the hinge portions and thereby controlling the degree of flexion of the knee;
spring means interconnecting said upper and lower sections for creating a moment about the pivotal axis of said hinge member for urging said upper and lower sections toward a predetermined relationship;
fastening means for securing the thigh and calf plates to the leg.

4,370,978
KNEE BRACE
Pasquale M. Palumbo, 906 Frome La., McLean, Va. 22101
Filed Oct. 21, 1981, Ser. No. 313,674
Int. Cl.^{3} A61F *3/00*
U.S. Cl. 128—80 C **9 Claims**

1. A knee brace for stabilizing a patella throughout the normal range of flexion and movement of the knee comprising:
a sleeve member;
a first arm member, the first end of which is adapted to be circumferentially wrapped about the knee above the patella, the second end of which is attached to said sleeve member;
first and second means for bracing the patella attached to said sleeve member and adapted to be positioned medially and laterally of the patella when the brace is in use to stabilize the patella;
a second arm member, the first end of which is adapted to be

circumferentially wrapped about the knee below the patella, the second end of which is connected to said sleeve member; and

third means for bracing the patellar ligament operatively associated with said second arm member and adapted to apply direct pressure to the patellar ligament when the brace is in use.

4,370,979
SUSPENSORY URINAL SHEATH EXPANDER
Dale L. Erickson, Box 283, Frederic, Wis. 54837
Filed Apr. 21, 1981, Ser. No. 257,429
Int. Cl.³ A61B *17/00*
U.S. Cl. 128—303 A **6 Claims**

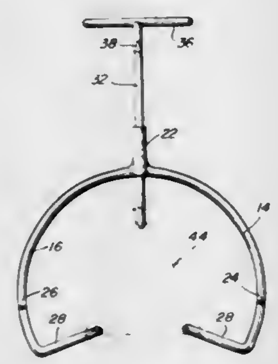

1. A urinal sheath support and expander including first stationary jaw means for insertion into the inlet end portion of a urinal sheath in close opposition to the internal surfaces of said inlet end portion at one side thereof, second movable jaw means guidingly supported from said stationary jaw means and for insertion into said inlet end portion in close opposition to the internal surfaces of said sheath at the other side thereof, said movable jaw means being supported from said stationary jaw means for shifting away from said stationary jaw means, said stationary and movable jaw means, when shifted away from each other, being operable to spread to inlet end portion of said sheath for free unobstructed insertion of a penis thereinto, said stationary jaw means including a pair of divergent arm portions including base and free ends, said free ends being spaced apart, means joining said base ends, guide structure stationarily supported relative to said base ends, a support rod shiftably supported from said guide structure and including a free end advanceable to a position disposed in a path extending between the free ends of said divergent arm portions, said free ends including elongated generally parallel jaw elements disposed generally normal to said arm portions and rod, said rod being displaceable away from said free ends of said arm portions to thereby displace the jaw element carried by said rod laterally away from a plane containing the jaw elements supported from said free ends of said arm portions, said divergent arm portions being generally quarter circular in shape and the base ends thereof being coextensive, said guide structure being supported from the base ends of said arm portions, said guide structure comprising a guide sleeve through which said rod is longitudinally slidably received, said free ends of said divergent arm portions being spaced substantially equally on opposite sides of the longitudinal center line of said sleeve.

4,370,980
ELECTROCAUTERY HEMOSTAT
Edward A. Lottick, 789 Wyoming Ave., Kingston, Pa. 18704
Filed Mar. 11, 1981, Ser. No. 242,746
Int. Cl.³ A61B *17/38*
U.S. Cl. 128—303.17 **8 Claims**

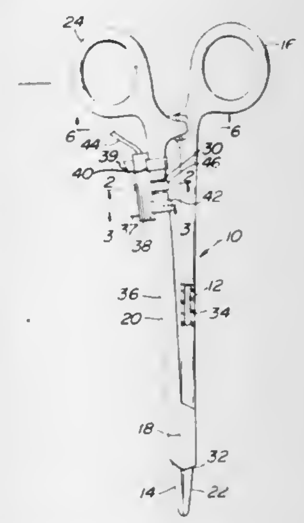

1. An electrocautery and hemostatic clamping device, comprising:
a first and second pivoted members pivoted at a point between the ends of said members, said members being comprised of a conductive material;
said first and second pivoted members being provided with mating jaws at one end, said mating jaws being of a cross-section adapted for probing during the performance of surgery;
said first and second members being provided with handle means at a predetermined distance from the jaws and adjustable retaining means for retaining said jaws in a predetermined clamping position;
an insulative covering applied over said first and second members extending substantially from the point of pivot to said handle means with at least one opening therethrough for an electrical connection to one of said members; and
electrical switch means adapted to be releasably attached to one of said members, said electrical switch means being provided with means for being connected to an electrical source, said electrical switch means being provided with an electrical connector for connecting through said opening in said insulative covering of said member to which said electrical switch means is attached whereby through operation of said electrical switch means an electrical potential may be applied to said members for cauterizing.

4,370,981
PROTECTIVE DEVICES AND METHODS
Brian A. Sanderson, Broom, Nr. Biggleswade, England, assignor to Smith & Nephew Associated Companies, Ltd., London, England
Filed Sep. 22, 1980, Ser. No. 189,621
Claims priority, application United Kingdom, Sep. 27, 1979, 7933560; Feb. 15, 1980, 8005292; Mar. 1, 1980, 8007047
Int. Cl.³ A61F *13/02*
U.S. Cl. 128—334 R **5 Claims**

1. A flexible adhesive skin closure having a central portion provided with apertures sufficient for the manipulation of would edges wherein said skin closure is of rectangular shape in which the length of one pair of opposing edges is not more than twice that of the other pair of opposing edges and which in use consists essentially of a polyurethane film coated on one surface with an adhesive and which coated film is flexible, elastic, air permeable, impervious to bacteria and liquid and has

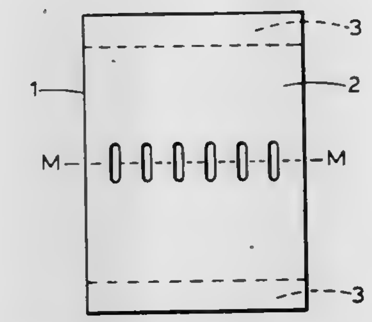

a moisture vapor permeability of at least 500 g/m²/day/40° C./100–20% relative humidity difference.

4,370,982
METHOD AND APPARATUS FOR INJECTING AND FOR CONTROLLING THE PRESSURE OF FLUID BEING INJECTED INTO A CATHETER
David M. Reilly, Glenshaw, Pa., assignor to Medrad, Inc., Pittsburgh, Pa.
Filed Sep. 10, 1980, Ser. No. 185,737
Int. Cl.³ A61M *25/00*
U.S. Cl. 604—98 **18 Claims**

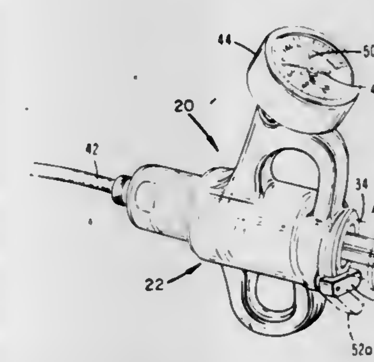

1. A pressure sensing device for measuring the fluid pressure in a closed system, the pressure in the closed system being varied by the movement of a syringe piston in a syringe barrel having a distal delivery end in fluid communication with the closed system, said pressure sensing device comprising:
(a) a housing having a passageway extending therethrough for receiving a syringe barrel having a distal delivery end connectable to a closed system; and
(b) pressure sensing means connected to said housing for sensing pressure changes in a fluid contained within the syringe barrel, said pressure sensing means including:
(1) first means for sensing and for generating a signal representative of movement of the syringe barrel with respect to said housing, the syringe barrel being received in the housing in such manner that movement of the syringe barrel is proportional to pressure changes of a fluid contained within the syringe barrel; and
(2) second means responsive to said first means for converting said signal into a pressure measurement.

4,370,983
COMPUTER-CONTROL MEDICAL CARE SYSTEM
Eric S. Lichtenstein, 420 Taconic Rd., Greenwich, Conn. 06830
Continuation-in-part of Ser. No. 915,472, Jun. 14, 1978, abandoned, which is a continuation of Ser. No. 670,608, Mar. 26, 1976, abandoned, which is a continuation-in-part of Ser. No. 625,738, Oct. 24, 1975, abandoned, which is a division of Ser. No. 494,006, Jul. 31, 1974, Pat. No. 3,946,731, which is a continuation-in-part of Ser. No. 395,214, Sep. 3, 1973, Pat. No. 3,912,455, which is a continuation-in-part of Ser. No. 108,118, Jan. 20, 1971, Pat. No. 3,774,762, and Ser. No. 157,942, Jun. 29, 1971. This application Apr. 30, 1979, Ser. No. 34,539
Int. Cl.³ A61B *5/00*
U.S. Cl. 128—630 **64 Claims**

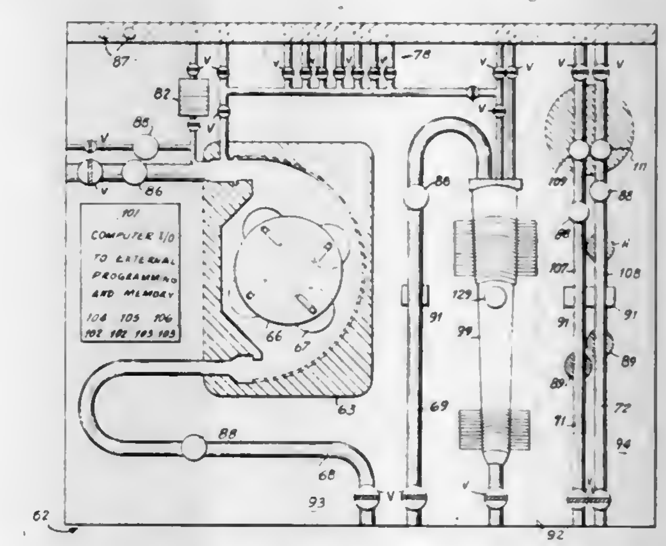

1. A computer-controlled medical care system suitable for carrying out any of a plurality of selected medical procedures in response to any of a plurality of selected programs, the term "medical procedures" being taken as inclusive of diagnostic and therapeutic procedures comprising:
computer means for receiving any of said plurality of programs, each of said programs being associated with a specific medical procedure;
at least one modular vessel structure, each modular vessel structure hereinafter termed "module";
support means for holding at least one said module, said module including first duct means for connecting with an individual and being arranged and constructed for cooperation with said support means for carrying out a selected procedure, said module including procedure-indicating means for indicating the specific procedure for which said module is designed;
and procedure-sensing and signalling means for sensing said specific procedure when said module is held in said support means for communicating the nature of said specific procedure to said computer means, said computer means being arranged and constructed for comparing said specific procedure with a selected program and for indicating whether said specific procedure and selected program correspond.

4,370,984
X-RAY TRANSPARENT MEDICAL ELECTRODE
James V. Cartmell, Dayton, Ohio, assignor to NDM Corporation, Dayton, Ohio
Division of Ser. No. 34,394, Apr. 30, 1979, Pat. No. 4,257,424. This application Mar. 23, 1981, Ser. No. 246,874
The portion of the term of this patent subsequent to Mar. 24, 1998, has been disclaimed.
Int. Cl.³ A61B *5/04*
U.S. Cl. 128—640 **6 Claims**

1. A medical electrode comprising:
an X-ray transparent conductor comprising a flexible, dimensionally stable, nonconductive plastic film, a layer of conductive silver paint adhered to one surface of said film and

having a first exposed conductive portion and a second exposed conductive portion spaced from said first exposed conductive portion, and further comprising a continuous insulating covering over said paint between said exposed portions;

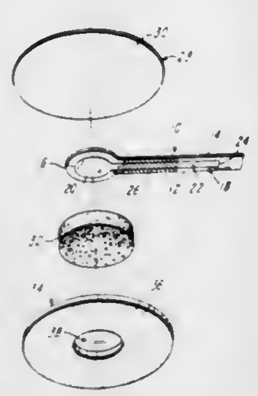

a gel filled sponge engaging said first exposed conductive portion; and

means securing said conductor to said sponge.

4,370,985

MEDICAL MEASURING APPARATUS

Hitoshi Takeichi, Kawasaki; Hiroshi Furuhata, Kasukabe; Ryoichi Kanno, Funabashi, all of Japan; Kuniyasu Kodaira, c/o Hayashi Denki Company Ltd., 2-7-11, Arima, Takatsu-ku, Kawasaki-shi, Kanagawa-ken, Japan; Mitio Ohno, and Hirozi Matumoto, both of Kawasaki, Japan, assignors to Kuniyasu Kodaira, Japan

Filed Apr. 21, 1980, Ser. No. 142,098

Claims priority, application Japan, Apr. 26, 1979, 54/51840

Int. Cl.³ A61B *10/00*

U.S. Cl. 128—663 **6 Claims**

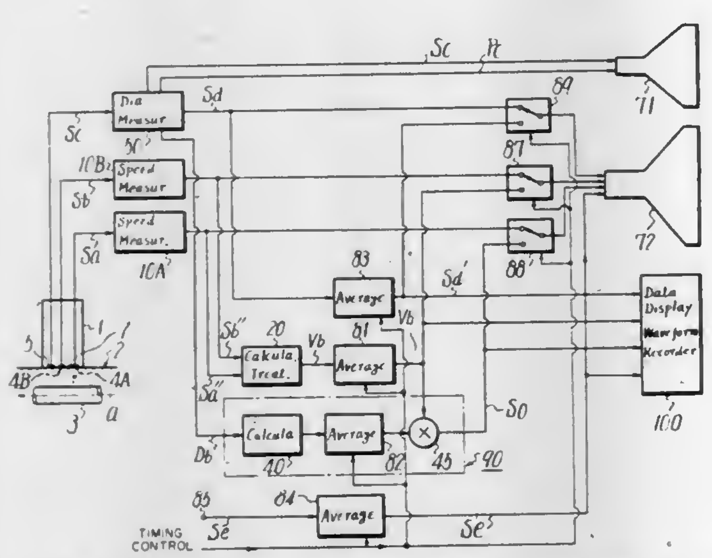

1. A medical measuring apparatus comprising: a probe adapted to be held in contact with a body surface of a patient adjacent a blood vessel, said probe having mounted therein to be in alignment with the blood vessel (a) an ultrasonic transmitting oscillating element inclined to be at an acute angle to the blood vessel (b), a pair of ultrasonic wave receiving oscillating elements arranged in front and rear of said transmitting oscillating element and inclined to be at acute angles to the blood vessel and (c), an ultrasonic wave transmitting and receiving oscillating element located at one side of one of said pair of receiving oscillating elements to be at right angles to said blood vessel, each of said ultrasonic transmitting oscillating element and said pair of ultrasonic wave receiving elements having a length at least equal to the diameter of said blood vessel;

first means for continuously driving said ultrasonic wave transmitting oscillating element to emit a continuous ultrasonic wave;

second means for intermittently driving said ultrasonic wave transmitting and receiving oscillating element to emit a pulsating ultrasonic wave;

said pair of receiving elements receiving a continuous ultrasonic wave reflected from the blood flow,

said transmitting and receiving oscillating element receiving a pulsating ultrasonic wave reflected from the blood vessel;

third means for receiving an output from said pair of receiving elements and generating a signal representing blood flow speed;

fourth means for receiving an output from said transmitting and receiving oscillating element and producing a signal output representing blood vessel diameter deviation and a pulse output having a width corresponding to the blood vessel diameter;

fifth means for producing a signal representing blood flow amount from the signals delivered from said third and fourth means;

sixth means for controlling said third and fourth means in response to an electrocardiogram output of the patient;

a first cathode ray tube for displaying the signals representing the blood flow speed, blood flow amount and blood vessel diameter deviation; and

a second cathode ray tube for displaying the signal representing the blood vessel diameter deviation output and also displaying the pulse output having the width corresponding to the blood vessel diameter.

4,370,986

METHOD AND APPARATUS FOR DETERMINING THE DEPOSITION OF PARTICLES IN THE RESPIRATORY TRACT AND/OR FOR CHECKING THE FUNCTION OF THE RESPIRATORY TRACT

Josef Gebhart, Dietzenbach; Gerhard Heigwer, Offenbach; Joachim Heyder, Frankfurt am Main, and Willi Stahlhofen, Bad Homburg, all of Fed. Rep. of Germany, assignors to Gesellschaft fur Strahlen-und Umweltforschung mbH München, Neuberberg, Fed. Rep. of Germany

Filed Sep. 26, 1980, Ser. No. 191,821

Claims priority, application Fed. Rep. of Germany, Sep. 26, 1979, 2938856

Int. Cl.³ A61B *5/00*

U.S. Cl. 128—716 **14 Claims**

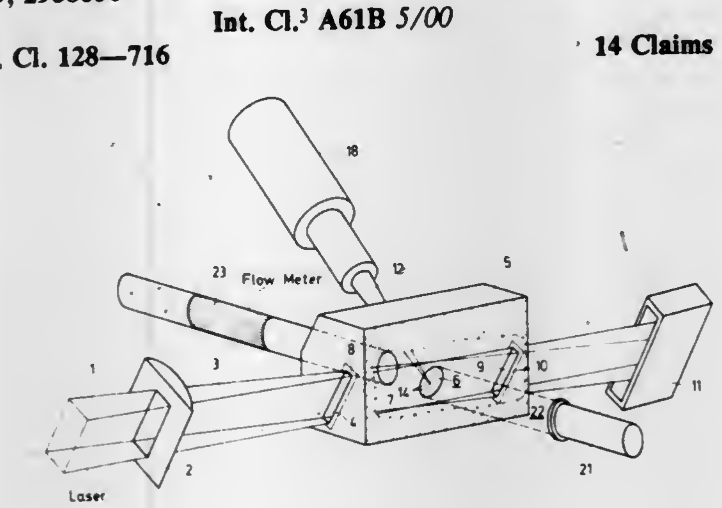

1. In a method for determining the deposition of particles in the respiratory tract or for checking the operating function of the respiratory tract of a test patient including injecting a pulse of a gas or aerosol into a stream of air to be inhaled by a test patient and obtaining a measuring signal in each of the inhaled and exhaled streams of the test patient; the improvement comprising: directly conducting the main stream of the inhaled and of the exhaled air through a band of light; placing the region of the intersection of the band of light with at least part of the inhaled and exhaled streams in the object plane of an optical image system of a light detecting device; and detecting the light radiation produced in said object plane by the inhaled and the exhaled streams to provide said measuring signal.

4,370,987

MEDICAL FLUID COLLECTION DEVICE

Seymour Bazell, 9235 N. Latrobe, Skokie, Ill. 60077, and Edward M. Goldberg, 225 Maple Hill Rd., Glencoe, Ill. 60022

Filed Oct. 7, 1980, Ser. No. 194,872

Int. Cl.³ A61B *5/14*

U.S. Cl. 128—760 **40 Claims**

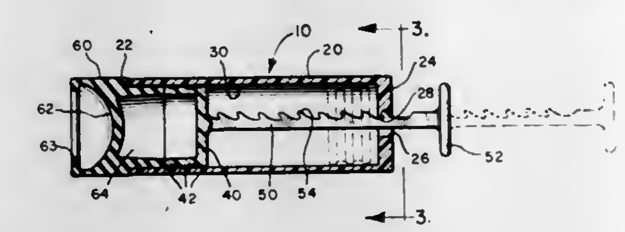

1. A medical fluid collection device comprising:

means for defining a fluid collection chamber;

means for manually generating a subatmospheric pressure in the chamber, said generating means comprising a handle mechanically secured to a portion of the chamber defining means to allow manual positioning of said portion with respect to the remainder of the chamber defining means by manipulation of the handle;

a pierceable diaphragm mounted to the chamber defining means such that a first side of the diaphragm is in fluid communication with the chamber; and

means for mechanically locking the portion of the chamber defining means in place with respect to the remainder of the chamber defining means to maintain subatmospheric pressure in the chamber.

4,370,988

CIGARETTE HOLDER SMOKE FILTERING CARTRIDGE WITH TWO STAGE SMOKE PURIFICATION ACTION

Masahiro Terasaki, 43, Okimiyacho, Edogawa-ku, Tokyo, Japan

Filed Aug. 19, 1981, Ser. No. 294,244

Claims priority, application Japan, Dec. 24, 1980, 55-187076[U]

Int. Cl.³ A24D *1/04*

U.S. Cl. 131—201 **13 Claims**

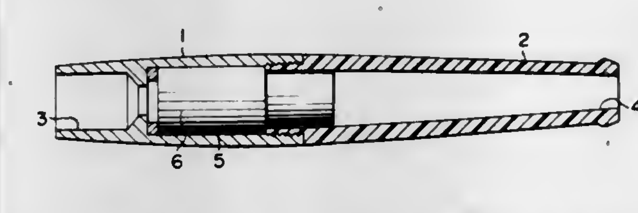

1. For a cigarette holder comprising a cigarette receiving member formed with a smoke intake passage and adapted to receive a cigarette so as to supply the smoke from said cigarette to said smoke intake passage, and a mouthpiece member formed with a smoke outlet passage and adapted to be sucked by the mouth of a user, said cigarette receiving member and said mouthpiece member being selectively detachably joined together, and a cartridge receiving chamber being defined within said cigarette holder by the cooperation of said cigarette receiving member and said mouthpiece member when they are so joined together, said smoke intake passage and said smoke outlet passage communicating to opposite ends of said cartridge receiving chamber:

a cartridge, for being fitted into said cartridge receiving chamber and for purifying smoke sucked into said smoke intake passage and sucked out of said smoke outlet passage, thus passing through said cartridge receiving chamber, comprising:

(a) an outer shell, comprising: a first hollow tubular portion; a second hollow tubular portion, connected substantially coaxially with said first hollow tubular portion; a dividing wall portion, generally separating the interior space within said first hollow tubular portion from the interior space within said second hollow tubular portion, extending generally perpendicularly to the central axis of said first and second hollow tubular portions, and formed with a hole, said hole communicating said interior spaces within said first and second hollow tubular portions; and a tubular inner lip, which extends all around the periphery of said hole formed in said dividing wall, and which extends from said periphery of said hole formed in said dividing wall in the direction of said central axis of said first hollow tubular portion on the side of said dividing wall portion towards said first hollow tubular portion;

(b) a cup member, formed with a substantially cylindrical tubular side wall portion and a bottom portion, mounted within said first hollow tubular portion at a position therein remote from said dividing wall portion with the central axis of said substantially cylindrical tubular side wall portion thereof substantially in coincidence with said central axis of said first hollow tubular portion, and with the open end of said cup member facing away from said dividing wall; said cup member intercepting across said interior space within said first hollow tubular portion except for a set of one or more relatively narrow spaces defined between the outer wall surface of said cup member and the inner wall surface of said first hollow tubular portion, the parts of said relatively narrow spaces nearer said dividing wall portion being communicated to the interior space within said first hollow tubular portion between said cup member and said dividing wall portion; a set of one or more relatively small apertures being formed through said side wall portion of said cup member and communicating between said interior space within said cup member and said set of relatively narrow spaces;

(c) a disk member, mounted so as to extend completely across said interior space within said first hollow tubular portion on the side of said cup member remote from said dividing wall portion, and generally contacting, with its side which faces towards said cup member, the edge of said substantially tubular side wall portion of said cup member remote from said bottom thereof; a hole being formed through said disk member and communicating the space on the side of said disk member remote from said cup member with said interior space within said cup member; said space on said side of said disk member remote from said cup member being communicated with said interior space within said first hollow tubular portion between said cup member and said dividing wall portion only via, in the specified order: said hole formed through said disk member, said interior space within said cup member, said set of relatively small apertures formed through said side wall of said cup member, and said set of relatively narrow spaces defined between said side wall portion of said cup member and said inner wall of said first hollow tubular portion;

and

(d) a filter, mounted in said interior space within said second hollow tubular portion so as to intercept passage of smoke from said hole in said dividing wall portion towards the end of said second hollow tubular portion remote from said dividing wall portion.

4,370,989

APPLICATOR FOR LIQUID COSMETICS

Charles H. Taylor, 15 Beacon Hill Rd., West Springfield, Mass. 01089

Continuation of Ser. No. 823,744, Aug. 11, 1977, abandoned. This application Sep. 19, 1979, Ser. No. 77,093

Int. Cl.³ A45D *40/00*

U.S. Cl. 132—79 B **4 Claims**

1. A hand held applicator for applying a cosmetic preparation which comprises:

a hollow handle comprising enclosing, flexible walls defining an interior space containing a quantity of air, the walls having an interior surface facing toward the interior space

and an exterior surface facing away from the interior space, both the entire interior wall surface and exterior wall surface normally being exposed and contacted by air;
the handle walls being provided with an unobstructed hole therethrough, the hole communicating with the interior space to permit free passage of air into and out of the interior space;
the handle walls being squeezable from a first position wherein no cosmetic preparation flows to a squeezed position wherein the cosmetic preparation flows from the applicator;
a wand operably connected to the handle, said wand having a cosmetic passage wherein the cosmetic preparation flows therethrough,
the wand being connected to the handle in in an air tight junction whereby air within the handle is completely separated from the cosmetic passage;
an applicator carried by the wand for applying the cosmetic preparation delivered through the cosmetic passage; and
a replaceable container positioned within the interior space and holding the cosmetic preparation, said container having flexible sidewalls and a cosmetic opening in fluid communication with the cosmetic passage, the cosmetic passage carrying the preparation from the container to the applicator,

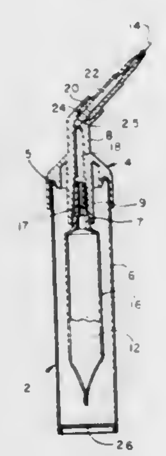

the container sidewalls, the cosmetic opening and the cosmetic passage forming a fluid path that is entirely closed whereby the cosmetic preparation is always separated from the air within the handle,
the container sidewalls having a first, unsqueezed condition when the handle walls are in their first position, and a second squeezed condition when the handle walls are in their said squeezing position;
the handle walls being in direct contact with the container sidewalls when the handle walls are urged to the said squeezed position, to force a portion of the cosmetic preparation through the cosmetic opening and a portion of the air through the unobstructed hole,
the portion of the interior space not occupied by the container being filled with air, the air leaving the interior space through the said hole when the handle is squeezed to the squeezed position, the air entering through the hole and surrounding substantially the entire container when the handle is in its said first position,
the walls of the handle not being in contact with the sidewalls of the container when in the said first position;
whereby a hand held apparatus is provided which may be easily and simply used by one hand to apply the cosmetic preparation.

4,370,990
COIN COUNTING AND STOPPING APPARATUS FOR USE IN A COIN HANDLING MACHINE
Kenkichi Watanabe, Tokyo, Japan, assignor to Laurel Bank Machine Co., Ltd., Tokyo, Japan
Filed Jun. 26, 1980, Ser. No. 163,284
Claims priority, application Japan, Jun. 29, 1979, 54/89179[U]; Nov. 13, 1979, 54/146948; Dec. 25, 1979, 54/179750[U]
Int. Cl.[3] **G07D** *9/00*
U.S. Cl. 133—8 A **6 Claims**

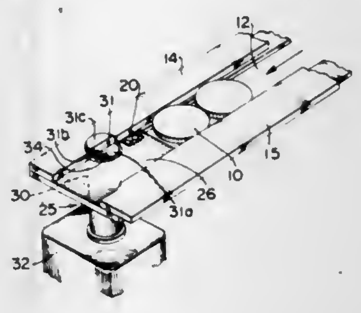

1. A coin counting and stopping apparatus for use in a coin handling machine wherein coins transferred in a coin path are counted one after another and stopped when a preset number of coins is counted which comprises:
at least one detector provided in the coin path for detecting the passage of the coins to generate signals;
a stopper rotatably mounted downstream of said detector and including a portion to be projected into the coin path so as to stop the coins when the stopper is rotated; and
means for rotating the stopper when the signals indicate that the preset number of coins are counted, said stopper being disposed so that its axis is perpendicular to the coin path and comprising a shaft formed at the top portion thereof with a cut-out.

4,370,991
DIP TREATING APPARATUS
Sture S. Lindvall, Henrik Palmes Alle 18, Djursholm S-182 62, Sweden
Filed Jul. 15, 1981, Ser. No. 283,638
Claims priority, application Sweden, Aug. 14, 1980, 8005749
Int. Cl.[3] **B08B** *3/04*
U.S. Cl. 134—76 **7 Claims**

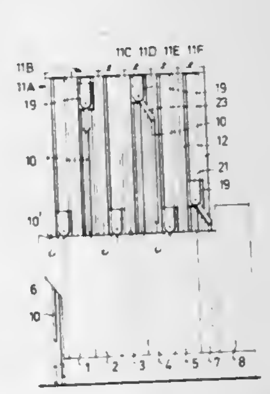

1. A dip treating apparatus for carrying out a multiple-step process in which the objects to be treated have to remain for preselectable periods of time in a number of different treating baths, and for moving in succession at least partially uniform carriers of the objects to be treated through a plurality of stations arranged in a row, one after the other, at least two consecutive ones of said stations including containers for treatment baths, said apparatus comprising a plurality of conveyor means, each of which is adapted to serve two consecutive and adjacent ones of said stations only and is operative to transfer one carrier at a time in a predetermined direction between said two stations, each of said conveyor means comprising a vertical guideway arranged at one side only of the two stations to be served, a slide member reciprocatable along said vertical guideway, driving means for reciprocating said slide member between predetermined end positions, a rocker member mounted on said slide member and capable of oscillating relative thereto between two perative positions by rocking about a horizontal pivot axis extending in a direction across said row of stations, means for forcibly changing the operative position of said rocker member whenever said slide member during its reciprocating movement approaches its respective end positions, and catching means provided on said rocker member in a manner to move in the direction between the two stations served by the conveyor means when said rocker member is forced to change its operative position, said catching means being adapted to pick up the carrier to be transferred at a first one of said two stations at a first level and to deliver it at the second one of said two stations at a second level, wherein said horizontal pivot axis of said rocker member is positioned relative to the slide member in a manner to remain, throughout the entire vertical stroke of said slide member, above the levels at which the carrier is picked up, and delivered respectively, by said catching means of the rocker member, and wherein said catching means are arranged to move along a path below said pivot axis of the rocker member when the latter is forced to change its operative position.

4,370,992
WASHING APPARATUS FOR SMALL PARTS
Hrishikesh Choudhury, Gurnee, Ill., and Juergen H. Zaha, Moore, S.C., assignors to Abbott Laboratories, North Chicago, Ill.
Filed Sep. 21, 1981, Ser. No. 303,697
Int. Cl.[3] **B08B** *3/02*
U.S. Cl. 134—100 **12 Claims**

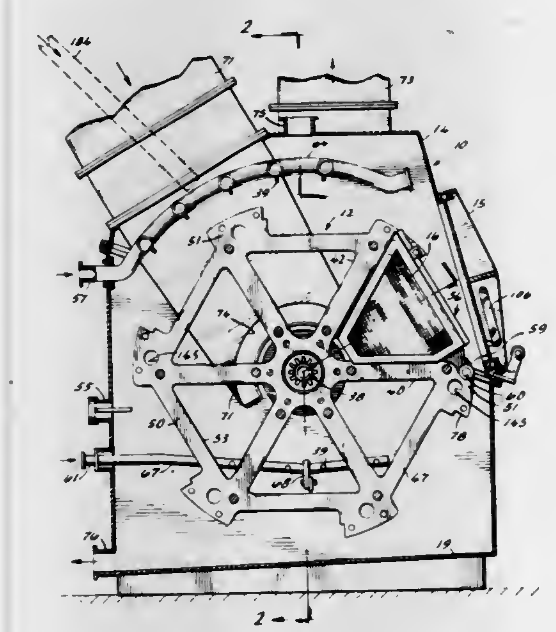

1. A washing apparatus for cleaning small component parts with a washing fluid comprising:
a carrier member;
a frame and housing member to enclose and support said carrier member in a rotatable manner on a horizontal axis;
means to rotate said carrier member;
a plurality of basket members carred by said carrier member;
said basket members defining a door member and at least one wall section formed of a material which will retain said parts therein but will allow said washing fluid to enter and exit therefrom;
nozzle means disposed inside said housing member and arranged to direct said washing fluid into said basket members at predetermined positions;
washing fluid conduit means connected to said nozzle means;
means defined by said housing member to drain said washing fluid from said housing at a position below said nozzle means;
said housing member defining an opening therein of a dimension which will permit said basket members to pass therethrough;
a closure member operatively associated with said housing to close said opening; and
means operatively associated with said basket member and said carrier member which will secure said basket member in one position within the confines of said carrier member and in another position will allow said basket members to be positioned through the opening in said housing to extend to the outside of said housing;
so that said basket members can be extended from said carrier member, through said opening to be disposed outside said housing member for loading of said component parts and subsequently moved back inside said housing for engagement with said carrier member.

4,370,993
DISPOSABLE UMBRELLA
Jean Desaleux, 181 Rue du Faubourg Saint-Honore, 75008 Paris, France, and Christian D'Artois, Paris, France, assignors to Jean Desaleux, Paris, France
Filed Jan. 21, 1981, Ser. No. 227,032
Claims priority, application France, Jan. 23, 1980, 80 01437
Int. Cl.[3] **A45B** *13/00*
U.S. Cl. 135—19.5 **10 Claims**

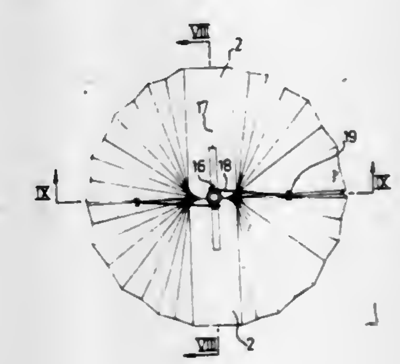

1. A cheap umbrella for a limited number of utilizations of a type comprising a folded canopy, the opening and closure of which are achieved through parts acting as forks and which are hinged on a slide sliding along a handle, the said canopy being formed from a roughly rectangular blank provided with parallel fold lines, for alternate folding to the inside and the outside, bounding between them pleats of constant width except for the end edges which are narrower than this width, the assembly double folded in zig-zag shape being subsequently folded in two round a transverse mid-line so that the two halves of each end edge butt against each other and are fastened together by bonding or welding, characterized by the fact that the said blank comprises a centre rectangular area **(2)** located between two successive fold lines **(3)**, both for folding to the inside, the width of which amounts to over twice the width of a standard pleat **(5)**; and that the said parts acting as forks are formed by two flat vanes **(18)** in cardboard or similar material of half-oval shape hinging on the fastening and hinge pieces **(16)** of the slide **(15)** and also hinging in the said glued flanges **(6)**, and through two tabs **(20)** hinging through two transverse grooves **(21, 22)** made in each of them and fixed by one of their ends into one of the said fastening and hinge pieces **(16)** of the slide **(15)** and by the other end on the inner face of the said centre rectangular panels **(2)**.

4,370,994
INFLATABLE UMBRELLA AND METHOD OF FABRICATING THE SAME
Benny R. Pittman, P.O. Box 672, Rutherfordton, N.C. 28139
Filed Feb. 19, 1981, Ser. No. 235,955
Int. Cl.^{3} A45B *19/02*
U.S. Cl. 135—20 B **11 Claims**

1. An inflatable umbrella characterized by the ability to be collapsed and retained in the form of a small easily carried package when not in use, and to be rapidly inflated to an operative configuration by the breath of the user or the like, and comprising
- a flexible plastic cover sheet having a generally circular outline,
- a flexible plastic panel overlying one surface of said cover sheet and being sealably joined along its peripheral edge to said one surface to define an enclosed airspace therebetween,
- an elongate flexible plastic tubular member having one end sealably joined to said panel and so that the interior of said tubular member is in fluid communication with said enclosed airspace,
- valve means mounted for permitting air to be selectively blown into and released from the interior of said tubular member and said enclosed airspace, and
- flexible bag means mounted at the other end of said tubular member, with said bag means being sized to receive and retain the cover sheet, panel and tubular member when collapsed,
- whereby the umbrella may be inflated to an operative configuration by blowing air through said valve means and into said tubular member and enclosed airspace, and such that the resulting air pressure serves to rigidify the tubular member and support the cover sheet and panel in a generally open expanded configuration, and the umbrella may be collapsed by releasing the air through said valve means to permit the cover sheet, panel, and tubular member to be folded into said bag means.

4,370,995
METHOD AND APPARATUS FOR PRENOTCHING A PIPELINE
William B. Smith, Berea, Ohio, assignor to The Pipe Line Development Co., Cleveland, Ohio
Filed Jan. 2, 1981, Ser. No. 221,883
Int. Cl.^{3} F16L *55/00;* **B23D** *21/08*
U.S. Cl. 137—15 **10 Claims**

9. A method of prenotching a pipeline in service to facilitate penetration of the pipeline with a shear plate having a pair of cutting edges on its leading face at axially spaced planes, comprising the steps of:
- securing a housing to the exterior of the pipeline capable of containing pressurized fluid existing in the pipeline and providing on the housing at least one axially extending access opening,
- supporting an external removable operator including a sprocket wheel on the housing at the access opening with its axis parallel to the axis of the pipeline,
- circumferentially wrapping the section of pipeline enclosed by the housing and the sprocket with an endless loop of power transmission type chain,
- providing axially spaced cutting wheels on the chain with cutting edges projecting radially inward of the chain,
- tensioning the chain to force the cutting wheels against the circumference of the pipeline section, and
- with the housing previously secured to the pipeline, moving the chain relative to the wall of the pipeline section in a

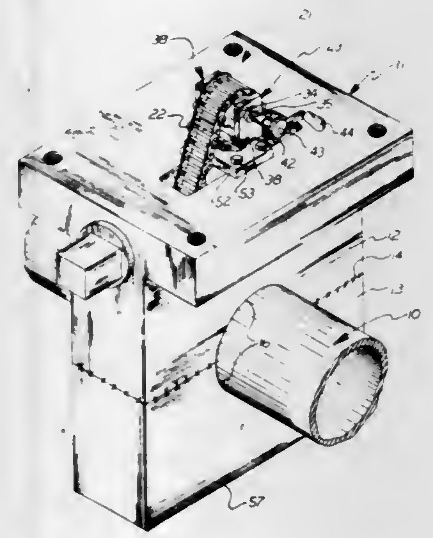

circumferential direction by the operator to cause said cutting wheels to cut into but not through the wall of the pipeline in a chipless manner, and
- removing the chain and cutting wheels from the pipe section to provide clearance for subsequent operation of the shear plate through said at least one access opening.

4,370,996
FLOW-CONTROLLED INJECTOR SYSTEM
James F. Williams, 25217 Rye Canyon Rd., Valencia, Calif. 91355
Filed Mar. 13, 1981, Ser. No. 243,371
Int. Cl.^{3} G05D *11/00*
U.S. Cl. 137—99 **11 Claims**

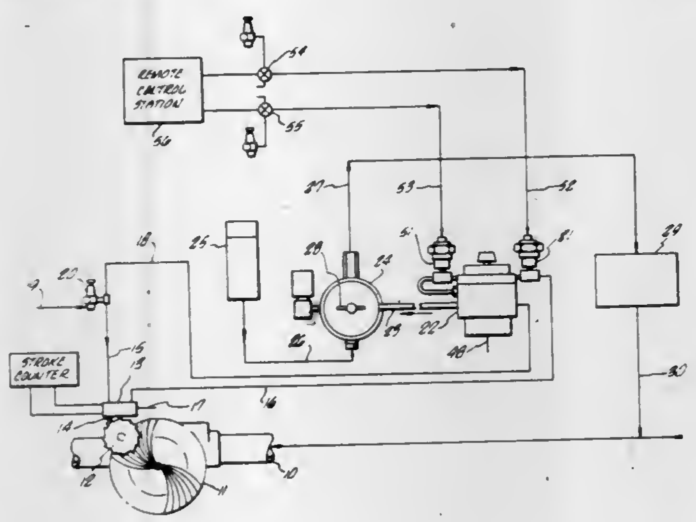

1. In a chemical injection system for use on fluid pipeline comprising, a meter measuring fluid flow through the pipeline, an air-operated injection pump means for connecting to the pipeline for injecting predetermined amounts of chemicals into the pipeline upon each stroke, a supply of pressurized air, a controller means operatively connected to said pump means, a valve means associated with said meter for supplying first pulses of pressurized air to the controller means proportional in rapidity to the fluid flow measured by the meter, and the controller means supplying separate and controlled second pulses of pressurized air to the pump means in response to and in sequence with the first air pulses from the valve means for operating the pump means in like sequence and further in which said controller includes an adjustable control valve and port means to permit said controller to cycle automatically at adjustable rates and second valve means for selectively isolating said adjustable control valve and operating the controller by air pulses from said meter-associated valve means or isolating said meter-associated valve means and operating the controller by said adjustable control valve and port means.

4,370,997
PRESSURE REGULATOR AND SAFETY VALVE ASSEMBLY
John D. Braithwaite, Maidenhead; Derrick O. King, Old Windsor, and Sidney J. Williams, Virginia Water, all of England, assignors to Black & Decker Inc., Newark, Del.
Filed Dec. 31, 1980, Ser. No. 221,901
Claims priority, application United Kingdom, Jan. 3, 1980, 8000177
Int. Cl.^{3} G05D *11/00*
U.S. Cl. 137—116.3 **3 Claims**

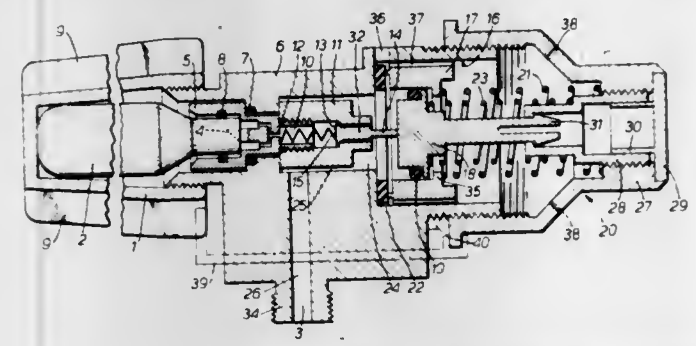

1. A pressure regulator and safety valve assembly, comprising:
- a body having a chamber therein with an inlet and an outlet, and said body having a bore therein in communication with said chamber;
- pressure regulating means, associated with said inlet, for regulating the pressure in said chamber;
- a safety valve member mounted for movement relative to a static surface in said body between a closed position in which the safety valve member seals against the static surface and an open position in which the safety valve member is spaced from the static surface and vents said chamber externally of said body;
- said safety valve member being slidably received in said bore and having a face in communication with said chamber, and said safety valve member being annular with a shoulder;
- a first spring resiliently urging said safety valve member against said static surface whereby when the pressure in said chamber acting upon said face overcomes the bias force of said first spring said safety valve member is lifted off said static surface to vent said chamber to atmosphere;
- said pressure regulating means comprising a piston slidably and sealingly received within said safety valve member, and a second spring resiliently urging said piston towards said chamber;
- a control member movably mounted on said body and operatively connected to said pressure regulating means for normally turning said pressure regulating means on and off, and for readily adjusting the setting thereof during normal use of the assembly;
- said control member also being operatively connected to said safety valve member whereby normal adjusting of said pressure regulating means by said control member simultaneously changes the setting of the safety valve member in dependence upon the setting of the pressure regulating means;
- said piston having an anchor extending therefrom which is engaged by said control member to positively withdraw said piston away from said chamber when said control member is moved to the "off" position; and
- said piston engaging said shoulder to positively lift said safety valve member away from said static surface when said control member is moved to the "off" position.

4,370,998
FUEL TANK FOR RESERVING DIFFERENT KINDS OF FUELS
Akiyoshi Kimpara, Hamamatsu, Japan, assignor to Yamaha Hatsudoki Kabushiki Kaisha, Iwata and Sanshin Kogyo Kabushiki Kaisha, Hamamatsu, both of, Japan
Filed Dec. 29, 1980, Ser. No. 221,051
Claims priority, application Japan, Jan. 10, 1980, 55-2343
Int. Cl.^{3} B65D *25/18;* **F17C** *3/00*
U.S. Cl. 137—264 **4 Claims**

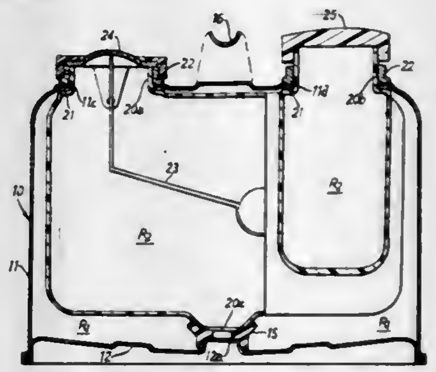

1. A fuel tank for containing and separately reserving a plurality of fuels comprising:
- an outer casing comprising a body having a top wall with a first opening, a second opening, and a third opening therethrough, a side wall and a bottom opening, said top wall and side wall forming a first fuel-receiving cavity, and a bottom member sealingly attached to the perimeter of said bottom opening so as to close said cavity;
- an inner casing having a continuous wall to form a second fuel-receiving cavity, and two necks, each forming an opening passing through a respective one of said openings;
- said inner casing having been placed in said cavity of said outer casing prior to attachment of said bottom member to said outer casing, a space being provided between the inner and outer casings to define said first fluid-receiving cavity, said first opening communicating with said first cavity;
- seal and fastener means fixing and hermetically sealing said necks to said openings;
- closure means for each of said openings, the closure for said first opening, and for at least one of said second and third openings being removable to give access to a respective cavity;
- there being a spacing between said bottom member and the bottom of said inner casing, and an elastomeric support member resting on said bottom member and supporting and centering said inner casing.

4,370,999
PRESSURE LIMITING DEVICE WITH TWO PRESSURE LEVELS FOR A PRESSURE COOKER
Christian Sebillotte, Selongey, France, assignor to SEB S.A., Selongey, France
PCT No. PCT/FR80/00068, § 371 Date Dec. 22, 1980, § 102(e) Date Dec. 22, 1980, PCT Pub. No. WO80/02496, PCT Pub. Date Nov. 27, 1980
PCT Filed Apr. 30, 1980, Ser. No. 227,100
Claims priority, application France, May 11, 1979, 79 12028
Int. Cl.^{3} F16K *17/12*
U.S. Cl. 137—270 **8 Claims**

1. A device for limiting the pressure to at least two pressure levels for a steam pressure-cooker, the said device comprising a steam escape duct terminating externally in a valve seat surrounding the duct opening, a cap which has an axial cavity adapted to accommodate the escape duct and connected to the

outside by two substantially tangential vents, wherein the cap is adapted to slide upon the steam escape duct and may be at. will turned over with respect to the steam escape duct, and a valve slidable in the axial cavity and provided at its ends with coaxial differently designed shut-off surfaces adapted to bear

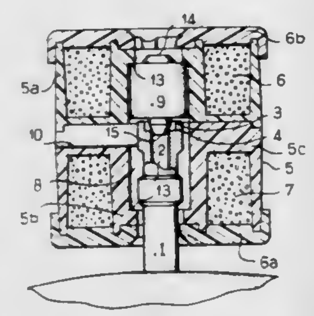

upon the seat in order to shut off the duct with different shut-off cross sections, the cap comprising, at each end, stops designed to apply the weight of the cap to the shut-off surface in such a manner that the center of gravity of the cap is located below the contact between the shut-off surface and the seat thereof.

4,371,000
ANTI SURGE FLOAT CHAMBER ASSEMBLY
Kazuo Shinoda; Keizo Higashigawa, and Ken Shiozawa, all of Toyota, Japan, assignors to Toyota Jidosha Kogyo Kabushiki Kaisha, Toyota, Japan
Filed Sep. 19, 1980, Ser. No. 188,831
Claims priority, application Japan, Feb. 15, 1980, 55-17394
Int. Cl.³ F16K *31/18, 33/00;* **F02M** *5/02*
U.S. Cl. 137—434 **1 Claim**

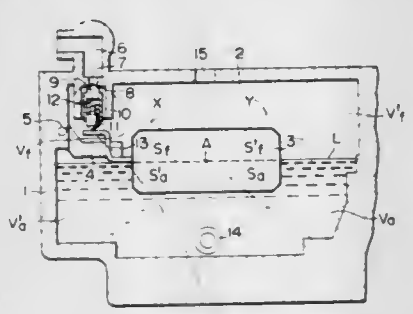

1. A float chamber assembly for controlling the supply of a fluid, comprising:
a body within which are defined a float chamber which provides an effective liquid containing chamber space, a fluid inlet passage opening into the float chamber for supplying the fluid into the float chamber, and a fluid outlet passage opening into a lower part of the float chamber for taking the fluid out from the float chamber;
a float within the float chamber;
means to enable the buoyancy force exerted on the float to be independent of the angle of tilting of the float chamber, said means comprising the shape of the float and the float chamber being such that they have each a common point and when a line including said common point is rotated around said point within a substantial angle such as 90 degrees, said line will traverse the same area on opposite sides of said point with respect to both the float and the effective liquid containing chamber space when viewed in a longitudinal cross section;
the float being supported to be movable up and down in the float chamber with one degree of freedom so that at one position of its movement, said common point on the float coincides with the fluid level of the float chamber;
and a fluid valve for controlling fluid flow through the fluid inlet passage, which is connected to the float so as to be closed when the float rises up to a position where said common point of the float coincides with that of said float chamber, with the level of fluid in said float chamber being at the level of said common point.

4,371,001
CHECK VALVE ASSEMBLY
John H. Olsen, Vashon, Wash., assignor to Flow Industries, Inc., Kent, Wash.
Continuation of Ser. No. 847,105, Oct. 31, 1977, abandoned. This application Mar. 10, 1980, Ser. No. 128,553
Int. Cl.³ F16K *15/00;* **F04B** *39/10*
U.S. Cl. 137—512.3 **12 Claims**

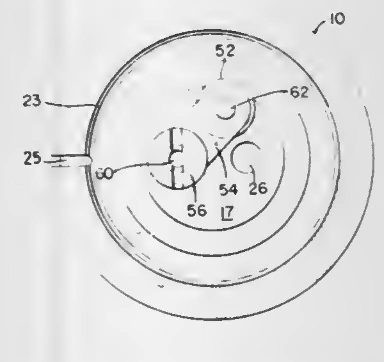

8. A check valve assembly, comprising:
a valve body, said valve body including an inlet passage therein, a valve seat associated with said inlet passage, and an outlet passage;
a disc-shaped sealing member adjacent said valve seat for sealing said inlet passage to prevent pressurized fluid from flowing into said inlet passage;
a leaf spring having first and second ends, said first end connected to said disc-shaped sealing member; and
connector means connecting said second end of said leaf spring to said valve body, said connector means being threaded into said outlet passage and having a passage therethrough for permitting fluid to pass into said outlet passage, said connector means and said leaf spring cooperating to bias said disc-shaped sealing member against said valve seat for preventing fluid backflow into said inlet passage.

4,371,002
HYDROSTATIC STEERING SYSTEM
Werner Tischer, Bobingen, Fed. Rep. of Germany, assignor to Zahnradfabrik Friedrichshafen, AG., Friedrichshafen, Fed. Rep. of Germany
Filed Jan. 28, 1980, Ser. No. 115,674
Claims priority, application Fed. Rep. of Germany, Feb. 3, 1979, 2904111
Int. Cl.³ F15B *13/04*
U.S. Cl. 137—625.3 **2 Claims**

1. In a hydrostatic mechanism having a valve piston (2), a housing (1) mounting the valve piston for axial and rotational displacement, said housing and valve piston being provided with confronting annular grooves enclosing an annular space, a passage bridging cavity (27) formed in the housing and extending from opposite sides of the annular grooves to form valve passages through which flow of pressurized fluid to and from said annular space is conducted with a predetermined flow control, the improvement residing in precisely dimensioned means for limiting said valve passages to circumferentially spaced locations about the valve piston at said groove (32) therein while maintaining said predetermined flow control, said precisely dimensioned means comprising recesses (28) provided on both of the axial sides of the cavity, the

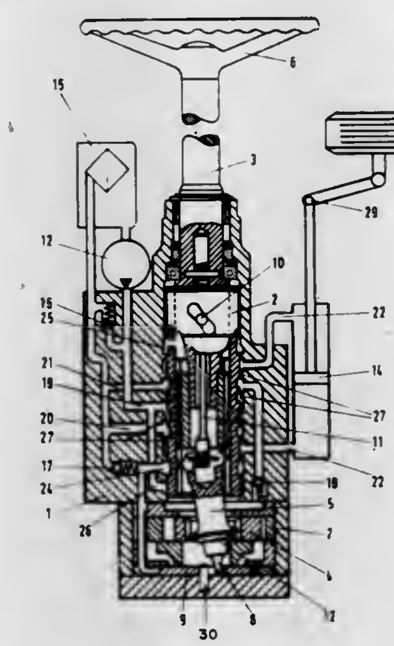

recesses on the respective axial sides being angularly spaced from each other about the periphery of the valve piston.

4,371,003
SWIMMING POOL/SPA SELECTOR VALVE
Robert P. Goguen, 350 Laurelwood Rd., Santa Clara, Calif. 95050
Filed Jan. 19, 1981, Ser. No. 226,071
Int. Cl.³ F16K *11/06*
U.S. Cl. 137—625.46 **6 Claims**

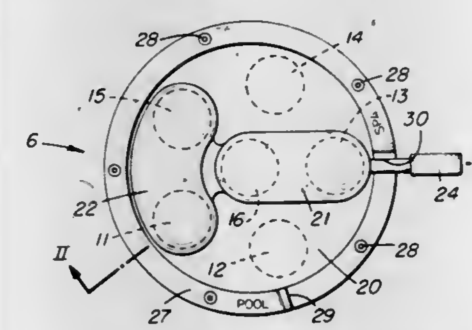

1. A valve for concurrently shifting two independent flows of fluid, comprising:
(a) a generally cylindrical valve body having a flat end wall on which are located two constant flow ports A,B and four determinable flow ports C,D,E and F, said ports being aligned for connection to six parallel and adjacent fluid conduits;
(b) first and second positionable conduits movable relative to the valve body between a first position and a second position, in said first position said first conduit connects constant flow port A with determinable flow port C and said second conduit connects constant flow port B with determinable flow port E and in said second position said first conduit connects constant flow port A with determinable flow port D and said second conduit connects constant flow port B with determinable port F; and
(c) selector means, connecting the valve body and the conduits together, for concurrently moving the first and second conduits relative to the valve body between the first position and the second position.

4,371,004
AUTOMATIC COUPLING DEVICE TO CONNECT TRACTOR AND TRACTOR-DRAWN MEANS HYDRAULIC SYSTEMS
Petr V. Sysolin, prospekt Pravdy, 60, kv. 25; Ivan I. Zaitsev, prospekt Pravdy, 6, kv. 12; Gary M. Pekerman, ulitsa Ufimskaya, 15, kv. 71; Jury P. Kurzov, prospekt Pravdy, 3, kv. 31; Alexandr E. Tompakov, ulitsa 50 let Oktyabrya, 11, kv. 35; Valery A. Maljuchenkov, ulitsa Volkova, 18, kv. 90, and Alexandr S. Kabachenko, pereulok Spusknoi, 12, all of Kirovograd, U.S.S.R.
Filed Sep. 17, 1980, Ser. No. 187,993
Int. Cl.³ F16L *37/28*
U.S. Cl. 137—899 **4 Claims**

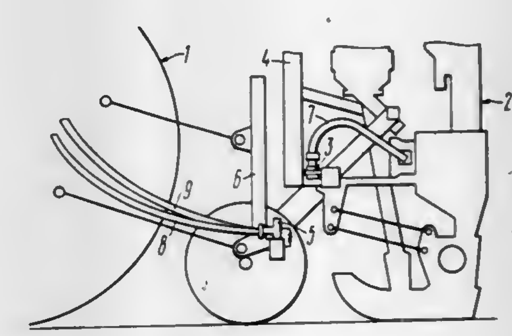

1. An automatic coupling device for connecting a hydraulic system of a tractor and a hydraulic system of a tractor-drawn device comprising:
a panel secured on said tractor-drawn device;
receiving unions accommodated in said panel and connected with said hydraulic system of said tractor-drawn device;
first shut-off valves built into said receiving unions for controlling fluid flow through said receiving unions;
a body secured on said tractor;
hollow plungers movably mounted in blind bores in said body, the number of said plungers being equal to that of said receiving unions and said plungers having first end faces movable into positions operatively engaging said receiving unions;
second shut-off valves disposed in the plungers at the first end faces operatively engaging said unions;
bottom chambers defined by said hollow plungers in each of said bores, said bottom chambers intercommunicating with each other;
a pressure port provided in the body for connection to the tractor hydraulic system;
a branch provided in said body and extending from said pressure port to said bottom chambers for furnishing fluid under pressure to said bottom chambers, such fluid moving said hollow plungers with respect to said body so that said first end faces enter said receiving unions and said second shut-off valves engage said first shut-off valves whereby said shut-off valves are moved to establish fluid communication between said receiving unions and said plungers;
a drain port provided in said body for connection to said hydraulic system of said tractor; and
apertures provided in the side wall of each of said plungers at the end faces opposite to those operatively engaging said unions for communicating the hollows of said plungers with respective ones of said pressure and said drain ports.

4,371,005
PROTECTIVE COVER FOR UNDERWATER FLOW LINE HUB

Charles D. Morrill, Bellaire, Tex., and Michael J. A. Best, Dursley, England, assignors to Smith International, Inc., Newport Beach, Calif.

Continuation-in-part of Ser. No. 973,895, Dec. 28, 1978, abandoned. This application Nov. 30, 1979, Ser. No. 98,965

Int. Cl.^{3} F16L *55/10*

U.S. Cl. 138—89 13 Claims

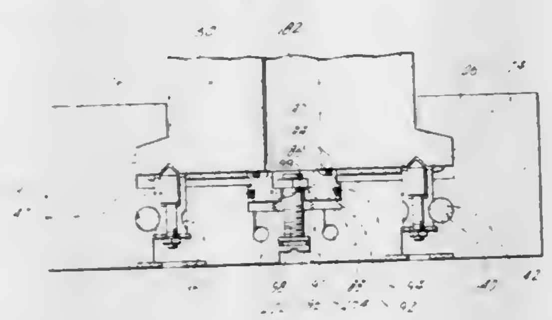

1. A temporary cover for a hub, the hub having an outwardly extending end flange with a front sealing face, comprising:
- a body member having one end adapted to enclose the hub, said body member having a blind cavity of substantially U-shape in said one end with the opening of the U extending through the top of the body member, said cavity having an outer portion shaped correlatively to the hub portion adjacent the flange end and an enlarged groove at its inner end shaped correlatively to such flange,
- means disposed substantially inside said body member for releasably lockingly engaging such sealing face of said hub, said engaging means including a first reciprocable member movable between a first position in engagement with, and a second position released from, such sealing face of said hub, and a second reciprocable member movable between a latched position in engagement with said first member and retaining said first member in said first position, and an unlatched position released from said first member, and
- a trigger mechanism operable to move said second member from its latched to its unlatched position to release said second member from said first member, said first member including camming means thereon cooperable with a correlatively shaped portion of such sealing face for moving said first member to its second position out of engagement with said hub when said second member is in said unlatched position upon applying a downward force to said cover, whereby said cover is released from said hub.

4,371,006
READING AND CONTROL DEVICE FOR A CONTROL MACHINE

Rudolf Schwarz, Horgen-Zuerich, Switzerland, assignor to Staeubli Ltd., Horgen-Zuerich, Switzerland

Filed Feb. 19, 1981, Ser. No. 236,824

Claims priority, application Switzerland, Feb. 22, 1980, 1417/80

Int. Cl.^{3} D03C *1/00*

U.S. Cl. 139—68 4 Claims

1. In a reading and control device for a control machine which is controlled by a pattern card having nonperforated points and holes, has a reading needle for reading the pattern card, and has a force amplifying bar movable in the direction of movement of the reading needle relative to a control part, the reading needle being movably supported in the force amplifying bar to project against the pattern card and being in active engagement with a lock member which is pivotally supported on the force amplifying bar for movement between two positions, a portion of the lock member in each such position being in the path of movement of control parts of the control device, the improvement comprising wherein the lock member is a lever having two arms which extend almost parallel to one another to form together a slot in which the head of the reading needle engages; wherein the inner surface of one arm is inclined near its free end and forms a sliding surface for the head of the reading needle; wherein between the lock member and force amplifying bar there is arranged a spring, which

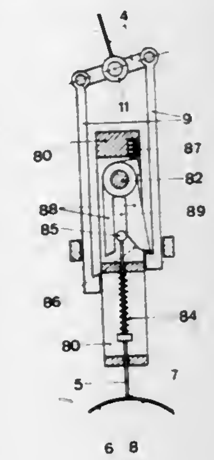

facilitates an urging of the inclined sliding surface of the one arm against the head of the reading needle; and wherein the two ends of the lock member during their outermost swings each reach beyond the force amplifying bar and into the path of movement of an offset portion of a respective draw arm for a correcting element of the control mechanism.

4,371,007
PICKING METHOD AND APPARATUS ON TEXTILE LOOMS INVOLVING THE USE OF A FLUID MEDIUM

Walter Scheffel, Hopfenstrasse 14, Weissenburg/Bayern, Fed. Rep. of Germany

PCT No. PCT/CH79/00087, § 371 Date Feb. 12, 1980, § 102(e) Date Feb. 12, 1980, PCT Pub. No. WO80/00087, PCT Pub. Date Jan. 24, 1980

PCT Filed Jun. 12, 1979, Ser. No. 191,241

Claims priority, application Fed. Rep. of Germany, Jun. 12, 1978, 2825679

Int. Cl.^{3} D03D *47/30*

U.S. Cl. 139—435 4 Claims

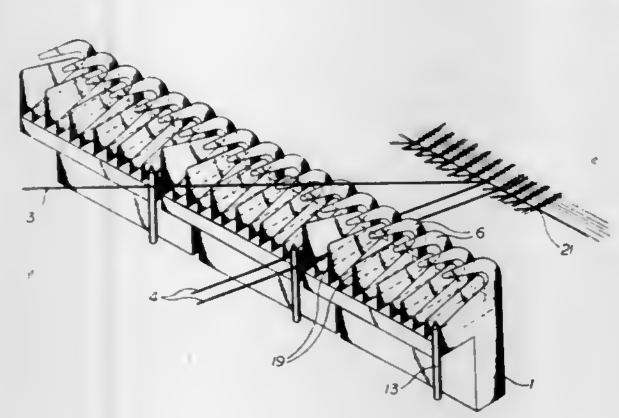

1. In an apparatus for the fluid insertion of the weft in a loom which comprises a swingable sley extending across the loom and carrying a reed for the battening of a weft inserted into a warp shed formed by warp threads extending through said reed transversely to said sley and wherein said sley is formed with a weft channel extending across said loom and swingable into a warp shed formed by separating lower warp threads from upper warp threads, said channel being provided with a plurality of nozzles at spaced locations across the loom and oriented to carry a weft pick through said channel in said shed, the improvement wherein said channel is formed by a plurality of flat first yarn guides extending between said warp yarns and of generally V-shaped profile opening toward said reed with upper flanks defining the upper side of said channel, rear flanks defining the rear of said channel and lower flanks, and second flat guides extending between the lower warp threads and spaced apart between said first guides, said second guides having upper edges disposed below said upper flanks and at least in part defining a bottom of said channel whereby the first guides pass through the warp at different positions from said second guides, said lower flanks being inclined downwardly toward said reed below said upper edges of said second guides.

4,371,008
GRIPPER HEAD FOR LOOMS WORKING WITH REMOVAL OF THE FILLING THREAD FROM STATIONARY BOBBINS

Erhard Freisler, Bubikon, Switzerland, assignor to Rüti Machinery Works Ltd., Rüti, Switzerland

Filed Aug. 18, 1980, Ser. No. 179,106

Claims priority, application Switzerland, Sep. 5, 1979, 8029/79

Int. Cl.^{3} D03D *47/20*

U.S. Cl. 139—348 7 Claims

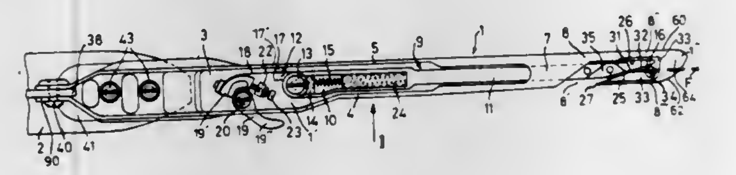

1. A gripper head for a loom for removal of a filling thread from stationary bobbins, comprising:
- means defining a clamping gap for fixedly clamping a filling thread which passes through the clamping gap essentially perpendicular to a central plane of warp threads;
- said means defining said clamping gap comprising a fixed stop means and a movable clamping tongue;
- means for displaceably mounting said clamping tongue for movement in the lengthwise direction of the gripper head in order to open and close said clamping gap;
- means defining an internal space in said gripper head;
- said clamping tongue being arranged in said internal space of said gripper head and having an elongated configuration;
- said gripper head having a tip portion;
- said tip portion running out into a flat hook having a mouth;
- said clamping gap being formed by an inner edge of said mouth and a related lengthwise edge of the clamping tongue; and
- said inner edge of said mouth of said hook forming said clamping gap and the related lengthwise edge of the clamping tongue each are provided with a respective step portion.

4,371,009
WEFT YARN ACCUMULATOR

Dionizy Simson, Winterthur, Switzerland, assignor to Sulzer Brothers Limited, Winterthur, Switzerland

Filed Mar. 16, 1981, Ser. No. 243,761

Claims priority, application Switzerland, Mar. 28, 1980, 2447/80

Int. Cl.^{3} D03D *47/34*

U.S. Cl. 139—452 9 Claims

1. A weft yarn accumulator for weaving machines in mixed weaving, said accumulator comprising
- a pair of endless belts for forming respective yarn stores, each belt having a pair of yarn entraining members mounted thereon for forming yarn loops in a respective store;
- said entraining members of each belt being spaced one-quarter of the belt length apart from one another on opposite sides of said belt and being staggered one-half of said belt length from one belt to the other belt;
- a first and a second yarn guide located on the side where a yarn enters a respective store and disposed on the side of one of said entraining members of one belt;
- a third, fourth and fifth yarn guide disposed centrally between the reversing points of said belt of one store and on the side of the other entraining member of said belt;
- said third and fourth yarn guide being the base vertices of the resulting triangle, the free end of a yarn passing consecutively around said entraining member on said one side of the belt, through said first yarn guide and said third yarn guide, around said entraining member on said other

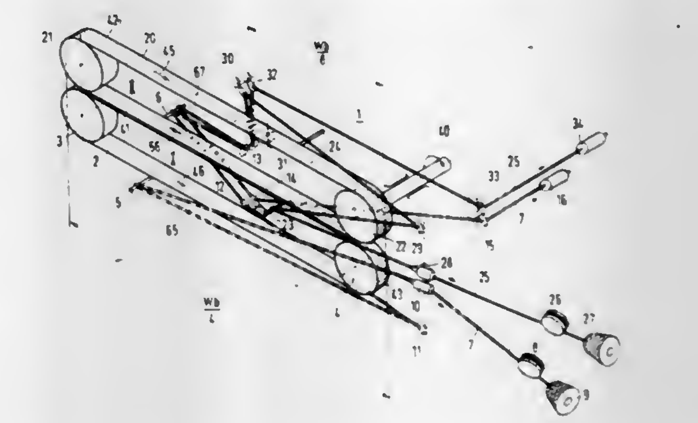

side of said belt, through said fifth yarn guide, again around said last-mentioned entraining member and through said fourth yarn guide to a shed;
- a sixth, seventh and eighth yarn guide disposed centrally between the reversing points of said belt of the second store and on the last-mentioned side of said belt;
- said seventh and eight yarn guides being the base vertices of the resulting triangle; and
- a free part of the other yarn passing consecutively around said last-mentioned entraining member, through said second, seventh, sixth and eighth yarn guide to the shed.

4,371,010
BUNDLING TIE APPLYING TOOL

Laszlo Hidassy, Jamesburg, N.J., assignor to Thomas & Betts Corporation, Raritan, N.J.

Filed Nov. 3, 1980, Ser. No. 203,687

Int. Cl.^{3} B21F *9/02*

U.S. Cl. 140—93 A 50 Claims

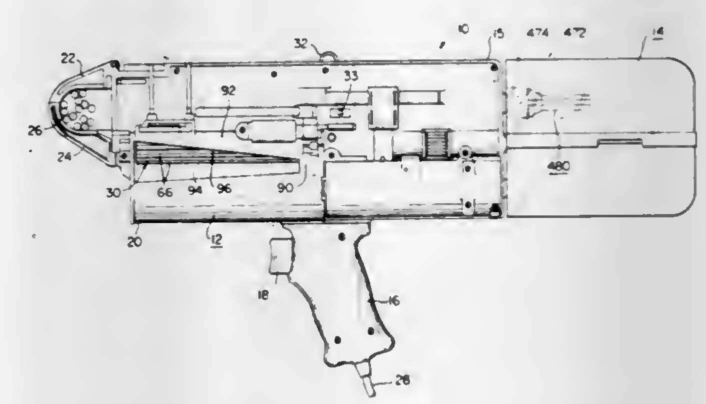

1. Apparatus for applying to a plurality of articles to be bundled an elongate, flexible bundling tie having a head and a strap portion from a succession of such bundling ties interconnected between adjacent heads by a web, comprising:
- a housing;
- means supported in said housing for receiving said interconnected ties individually from said succession of bundling ties;
- means for advancing said ties from said receiving means to a separating station;
- means at said separating station for cutting the web between said tie heads to thereby provide separated, individual ties;

means for positioning an individual tie in a closed loop about said articles to be bundled; and

means for tensioning said tie about said articles.

4,371,011

ROTARY TIE CARRIER IN A BUNDLING TIE APPLYING TOOL

Laszlo Hidassy, Jamesburg, N.J., assignor to Thomas & Betts Corporation, Raritan, N.J.

Filed Nov. 3, 1980, Ser. No. 203,694

Int. Cl.³ B21F *9/02*

U.S. Cl. 140—93.2 **9 Claims**

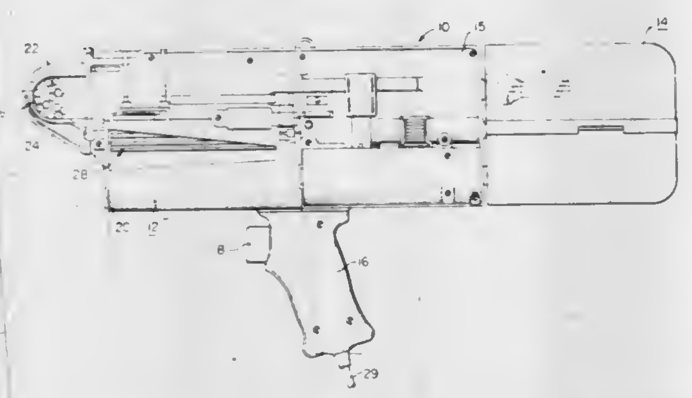

1. In a bundling tie applying tool, tie carrying apparatus for advancing a tie positioned thereon within said tool comprising a rotatable tie carrier supported for rotation about an axis within said tool and means on said tie carrier for holding said tie thereon in a position aligned with such axis during rotation of said tie carrier.

4,371,012

APPARATUS FOR WORKING LEADS OF ELECTRICAL COMPONENTS

Thomas Weresch, Greschbachstr. 19, D-7500 Karlsruhe 41, Fed. Rep. of Germany

Filed Nov. 6, 1980, Ser. No. 204,513

Claims priority, application Fed. Rep. of Germany, Nov. 6, 1979, 2944684

Int. Cl.³ B21F *1/00*

U.S. Cl. 140—105 **17 Claims**

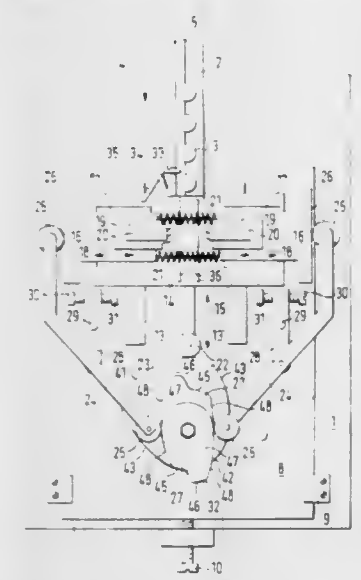

1. In an apparatus for working leads of electrical components having an inlet unit with a guideway and fixedly supported on a base-plate, two tools designed for operation with said inlet unit and powered by a driving motor, the tools each being positioned on a different one of two tool supports so that they may be moved towards each other for bending and kinking the leads of the said components between them, the leads running into the working path of the tools, which are supported on a carriage designed for a backward and forward working motion, parallel to the inlet unit's guideway and which are able to be moved towards each other for shutting in a direction normal to the inlet direction of the components and in timed relation to the working motion of said carriage, the invention residing in that

each tool support has a guide face generally parallel to said working motion of said carriage, the length of the guide faces being at least equal to the size of the working motion, the apparatus further having two levers, turningly supported on said base-plate, each one of these levers running against a different one of said guide faces, and

at least one shutting cam designed to be turned by said motor for moving said levers.

4,371,013

METHODS OF STRAIGHTENING BACKPLANE-SUPPORTED PINS

Carey A. Camp, Richmond, Va., assignor to Western Electric Company, Inc., New York, N.Y.

Filed Aug. 29, 1980, Ser. No. 182,731

Int. Cl.³ B21F *1/02*

U.S. Cl. 140—147 **7 Claims**

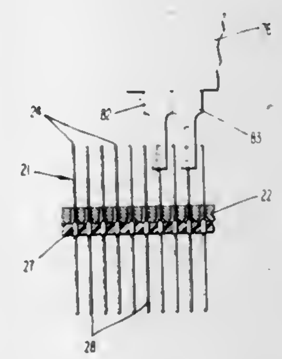

1. A method of straightening pins supported in equally spaced rows in a pin-populated backplane, which comprises the steps of:

mounting spatially at least two straightening bars in a parallel relationship with a spacing at least equal to the distance between the spacing of alternate rows of pins;

capturing simultaneously tips of the pins of alternate rows within respective ones of the straightening bars during a straightening cycle;

processing the straightening bars and the captured rows of pins whereby a first of the two straightening bars provides a single straightening cycle for each of the rows of pins and a second of the two straightening bars provides a single straightening cycle for each of the rows of pins;

wherein after the straightening of each of the rows of pins by each of the bars and while the pins remain captured by each of the bars, the method further comprises the step of bending each of the captured rows of pins slightly toward the next adjacent row of pins to be straightened; and

wherein during the straightening of the next adjacent row of pins by each of the bars, the method further comprises the step of moving the exterior side wall of each of the bars which is adjacent to the bent pins into engagement with the bent pins to facilitate the straightening thereof.

4,371,014

APPARATUS FOR DOSING AND DISPENSING A PREDETERMINED VOLUME OF POWDERED MATERIAL

Alessandro Cane, Bologna, Italy, assignor to Zanasi Nigris S.p.A., Bologna, Italy

Filed Oct. 31, 1980, Ser. No. 202,660

Claims priority, application Italy, Oct. 31, 1979, 15300/79[U]

Int. Cl.³ B67B *1/04*

U.S. Cl. 141—91 **6 Claims**

1. Apparatus for dosing and dispensing a predetermined

volume of powdered material into containers moving sequentially along a rectilinear guide path, comprising supply tank means for containing said powdered material; a plurality of rotary doser-dispenser units mounted on a single shaft defining a common rotational axis of said units, said rotational axis being substantially parallel to the rectilinear path along which the containers move, each unit including a plurality of open-ended radial chambers being sequentially inserted into the powdered material contained in the supply tank means during rotation of each said unit about said rotational axis, suction means operatively connected to said chambers for filling the chambers with the powdered material, said chambers being

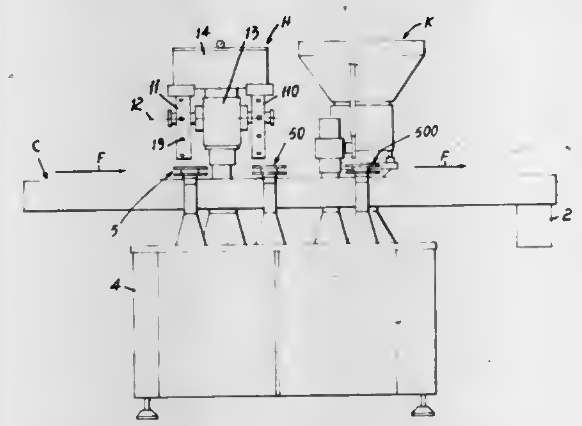

further sequentially movable into axial alignment with a receiving open end of the containers, pneumatic pressure means being applied to said chamber for discharging the powdered material from each chamber into the respectively aligned container; conveyor means defining said rectilinear guide path for moving each said container into successive alignment with a chamber in at least two said units; and means for intercepting and stopping said container in successive alignment with the corresponding chamber of said units to thereby enable the powdered material in the chamber of said two units being discharged into the container to increase the dosage of material in the container.

4,371,015

TONER LOADING SYSTEM HAVING CARTRIDGE WITH DISPLACEABLE DIAPHRAGM

Peter B. Simons, Los Altos, Calif., assignor to TBS, Inc., Mountain View, Calif.

Filed Dec. 24, 1980, Ser. No. 219,962

Int. Cl.³ B65B *1/06;* **B67B** *7/24*

U.S. Cl. 141—352 **6 Claims**

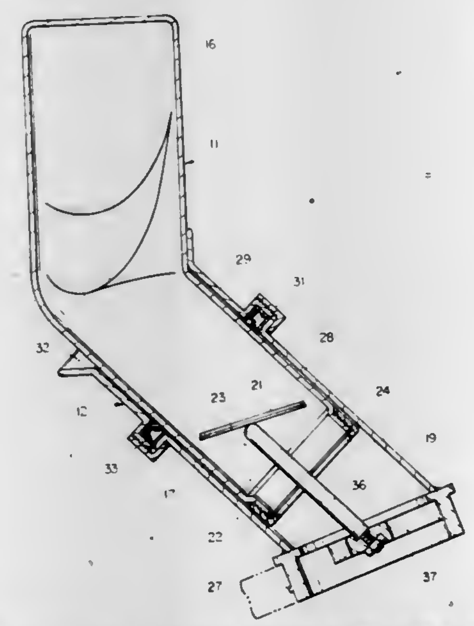

1. In a system for loading a fluid toner material into the toner hopper of a machine: a cartridge containing the toner material having a discharge opening sealed by a displaceable diaphragm of non-rupturable material, said diaphragm being larger than the discharge opening and free of attachment to said cartridge but, in a sealing position, extending across and closing said opening and having a peripheral edge portion sealingly but releasably engaging said cartridge inwardly of said discharge opening, a filler neck mounted on the machine in fluid communication with the toner hopper for receiving the toner cartridge, and means entirely within and eccentric to the filler neck for engagement with the diaphragm to dislodge and tilt said diaphragm from its sealing position to open the discharge opening and permit the passage of toner material from the cartridge to the machine when the cartridge is inserted into the filler neck.

4,371,016

DELIMBING APPARATUS

Jack E. Bradshaw, Rte. 3, Box 184A, Wallace, N.C. 28466

Filed Mar. 11, 1981, Ser. No. 242,618

Int. Cl.³ B27L *1/00*

U.S. Cl. 144—2 Z **12 Claims**

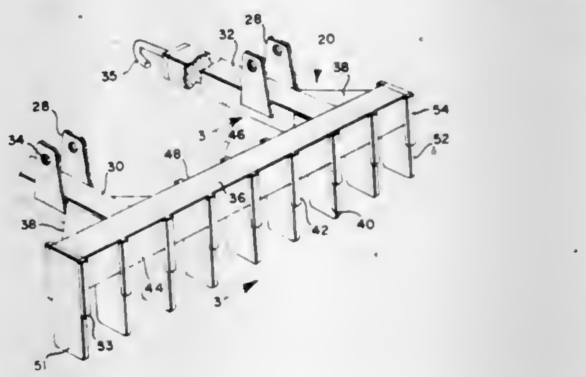

1. A vehicle delimbing apparatus for delimbing trees including:

(a) a frame having a top, a bottom, a front and a back;

(b) a plurality of delimbing arms projecting from the bottom of said frame;

(c) support braces secured to the front and back of said frame generally parallel to said delimbing arms extending partially along the length of said arms and being securedly affixed to said frame and said arms,

(d) whereby said delimbing arms are restrained from movement when said delimbing apparatus is operated by being moved along the longitudinal length of felled trees; and,

(e) attachment means for attaching said delimbing apparatus to a vehicle.

4,371,017

FOREST THINNING DEVICE

Karl T. Lindblom, Alfta, Sweden, assignor to Ostbergs Fabriks AB, Alfta, Sweden

Filed Sep. 26, 1980, Ser. No. 191,813

Claims priority, application Sweden, Oct. 8, 1979, 7908312

Int. Cl.³ A01G *23/08*

U.S. Cl. 144—3 D **7 Claims**

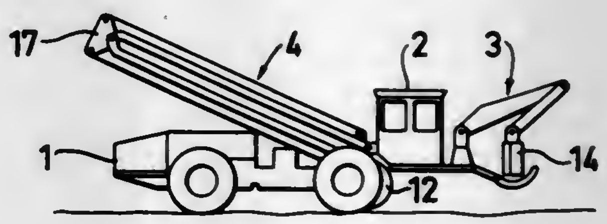

1. A forest thinning device for forest working vehicles comprising a base vehicle, an operator's cabin, a crane having an arm pivotable at one end vertically and laterally, a felling and

gripping aggregate pivotably carried by the other end of said arm, said arm and said aggregate being operable from the cabin by control units therein, an extendable and vertically movable boom arrangement, one end of which is mounted on the vehicle for rotation around a vertical axis, and the other end of which carries both said cabin and said crane, the boom arrangement also being retractable and extendable from the cabin by control units therein to enable movement of said cabin and crane from a retracted resting position on the vehicle, used during the transport of the same, to an extended position spaced from the vehicle.

4,371,018

DEVICE FOR REPAIRING POLES FOR SUPPORTING ELECTRIC POWER TRANSMISSION LINES AND THE LIKE

Victor Arnold, 3 Fairfax St., Mosman, New South Wales, 2088, Australia

Filed Sep. 17, 1980, Ser. No. 187,994

Claims priority, application Australia, May 26, 1980, PE03723

Int. Cl.³ B27C *9/00*

U.S. Cl. 144—4 **2 Claims**

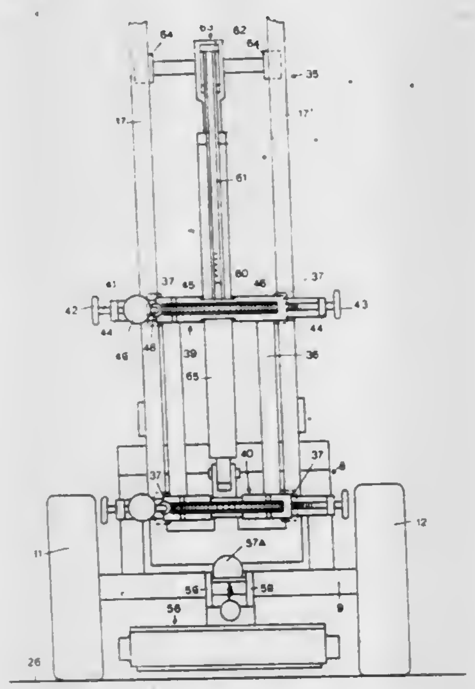

1. An apparatus for repairing a pole used to support a line comprising:
- a base frame;
- guide means carried by said base frame positionable in a substantially vertical position adjacent a pole to be repaired;
- a movable carriage guided by said guide means;
- clamp means carried by said carriage for clamping the pole;
- means for moving said carriage with respect to said base frame so that the clamped pole is raised and lowered with respect to the base frame; and
- cutting means carried by said base frame for sizing a lower end portion of a raised pole.

4,371,019

MOBILE LOG SPLITTING APPARATUS

Michael J. Jeffrey, 1430 Stewart Rd., Hudson, Mich. 49427

Filed Aug. 25, 1980, Ser. No. 180,518

Int. Cl.³ B27L *7/00*

U.S. Cl. 144—193 A **23 Claims**

17. A self-contained, mobile log splitting apparatus comprising, in combination, a framework, a guide chute supported by said framework and defining a generally V-shaped passageway open at each end and at the top thereof, a drive member mounted for reciprocal movement in the passageway defined by said chute, said drive member being of stepped configuration and of progressively decreasing thickness in a direction toward the apex of said chute, a log splitting head supported by said framework adjacent one end of said chute, said splitting head having a plurality of log splitting wedges directed toward said one end of said chute, hydraulic ram means operable to advance and retract said drive member in the passageway

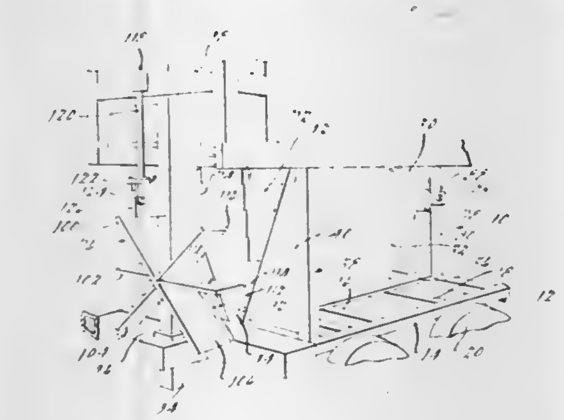

defined by said chute, a hydraulic pump mounted on said framework and operatively connected to said hydraulic ram means, an internal combustion engine mounted on said framework and powering said hydraulic pump, and wheel means supporting said framework.

4,371,020

THREE-STEP PROCESS FOR PREPARATION OF LONG WOOD STRANDS

Derek Barnes, Vancouver; Mark T. Churchland; Arnold W. Herndier, both of Burnaby; Walter W. Schilling, Delta, and James K. Welsh, Burnaby, all of Canada, assignors to MacMillan Bloedel Limited, Vancouver, Canada

Continuation-in-part of Ser. No. 142,748, Apr. 22, 1980, abandoned, which is a continuation of Ser. No. 885,986, Mar. 13, 1978, abandoned. This application Oct. 21, 1980, Ser. No. 199,190

Int. Cl.³ B27L *7/00*

U.S. Cl. 144—366 **6 Claims**

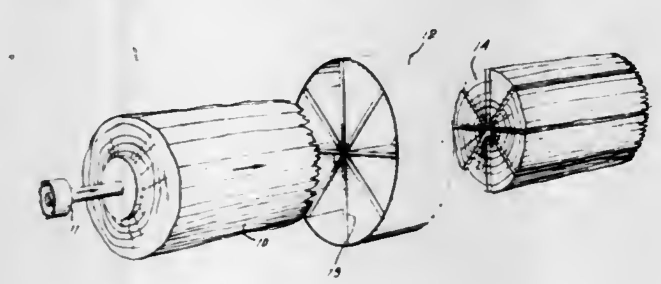

1. The method of splitting a log into longitudinal grain wood strands comprising the steps of,
- radially splitting the log substantially along the grain of the log into a plurality of sector shaped segments, said radial splitting including pushing the log axially through at least one sector splitter ring,
- parallel splitting each of the sector shaped segments along the grain of the segments into a plurality of substantially parallel slabs, said parallel splitting including pushing each of the segments through a plurality of spaced apart splitting blades, and
- further splitting each of the parallel slabs substantially along the grain of the slabs, said further splitting including feeding each of the parallel slabs through two rows of intermeshing counter rotating parallel discs, pulling each of the slabs between the rows of discs and simultaneously splitting each of the slabs into a plurality of discrete longitudinal-grain strands whose surfaces generally follow the grain in the wood throughout their length.

4,371,021

BOX TOP OPENER

Gregg A. Converse, and Maurice Converse, both of 1311 Briarhill Dr., Akron, Ohio 44313

Filed Sep. 23, 1980, Ser. No. 189,882

Int. Cl.³ B67B *7/00*

U.S. Cl. 145—21 **2 Claims**

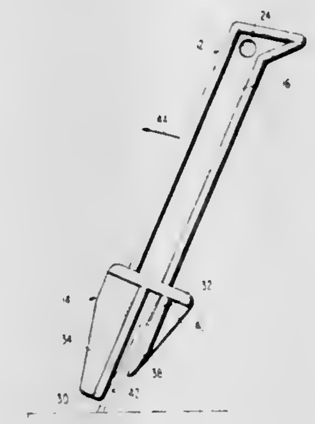

1. A box top opener comprising elongated handle means, flat plate means secured to and extending transversely to the length of said handle means at one end thereof, first and second flat, parallel, closely spaced apart jaws extending perpendicular to said plate means opposite said handle means for receiving a box top therebetween for separating that portion of a box top received therebetween from the sides of the box and bending said portion upwardly to open one corner of the box to provide access to the contents thereof, said first jaw being comprised of a substantially rectilinear plate having a width and length sufficient to overlie a substantial portion of the upper surface of the box top and said second jaw being comprised of a triangular plate the base of which is equal to the width of the upper plate and the length of which is greater than half the length but considerably less than the full length of said first plate, the edges of said triangular second plate remote from said first plate being beveled to facilitate insertion of said second plate beneath a box top and reinforcing means secured to and extending perpendicularly to said plate means and said jaws for reinforcing said jaws against bending movement relative to said plate means.

4,371,022

GOLF CLUB CADDY

Joseph G. Goulart, 5372 Clairemont Mesa Blvd., San Diego, Calif. 92117

Filed May 26, 1981, Ser. No. 266,716

Int. Cl.³ A63B *55/00*

U.S. Cl. 150—1.5 R **8 Claims**

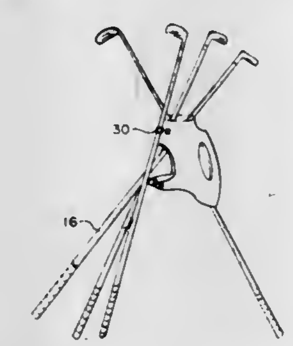

1. A one piece combination golf club carrier and golf stand adaptor, comprising:
- a light weight substantially cylindrical, hollow body of flexible material with sufficient rigidity to maintain its general shape and having a hand grip at the top thereof;
- a portion of said body beneath said hand grip being cut away to form a club shaft passage with retaining ring straps extending from the bottom of said body at the rear portion of said body adjacent said passage;
- fastening means on said straps for permitting quick fastening and unfastening of said straps;
- a substantially circular open throat at the forward end of said body tilted upwardly relative to said body axis and smaller in diameter than the length of a golf club head;
- a neck portion flaring downwardly from said throat and extending below said body;
- said body constituting a golf club carrier when said straps are fastened to form a retaining ring for retaining several golf clubs within said throat hollow body, and retaining ring and out the open back of said hollow body; and
- said body forming a golf club stand adaptor with at least three of said golf club shafts when said straps are unfastened and said golf club shafts are extended through said passage and into said flared neck portion with said stand supported on the ground solely by the ends of said club shafts and with said throat engaging said club shafts intermediate their ends for maintaining said clubs in the spread position.

4,371,023

TUBELESS TIRE WITH INSERT FOR PREVENTING COLLAPSE IN THE EVENT OF LOSS OF AIR PRESSURE

Thomas G. Campagna, Selden, N.Y., assignor to Aqualume, Incorporated, Selden, N.Y.

Filed Nov. 24, 1980, Ser. No. 209,425

Int. Cl.³ B60C *17/00, 13/00, 9/00*

U.S. Cl. 152—158 **10 Claims**

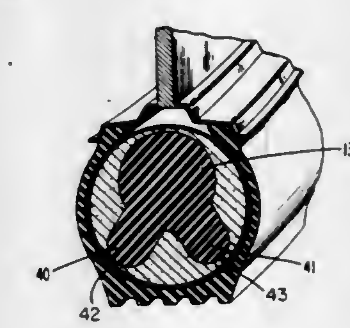

1. The combination of an inflatable tubeless tire and an insert within the tubeless tire for preventing collapse in the event of loss of air pressure, the insert comprising:
- (a) a toroidal core of solid material;
- (b) a resilient foam casing annularly surrounding the core;
- (c) a thin outer flexible shell annularly surrounding the casing; and
- (d) flange means flexibly and integrally formed as part of the core for bowing out towrds the tire sidewalls after puncture of other loss of air pressure to give added strength to the tire sidewalls and prevent additional collapse.

2. The combination of an inflatable tubeless tire and an insert within the tubeless tire for preventing collapse in the event of loss of air pressure, the insert comprising:
- (a) a toroidal core of solid material;
- (b) a resilient foam casing annularly surrounding the core;
- (c) a thin outer flexible shell annularly surrounding the casing; and further including wedge means attached to the interior of the tire sidewalls to give added strength thereto and prevent additional sidewall collapse after puncture or other loss of air pressure.

4,371,024
EMERGENCY RUNNING RING FOR PNEUMATIC VEHICLE TIRES

Hermann Stein, Wuppertal-Barmen, and Ulrich Piepenbrink, Schwelm, both of Fed. Rep. of Germany, assignors to Vorwerk & Sohn GmbH & Co. KG, Wuppertal-Barmen, Fed. Rep. of Germany
Filed Feb. 10, 1981, Ser. No. 233,136
Claims priority, application Fed. Rep. of Germany, Mar. 8, 1980, 3008972
Int. Cl.^{3} B60C *17/00, 5/00*
U.S. Cl. 152—158 **11 Claims**

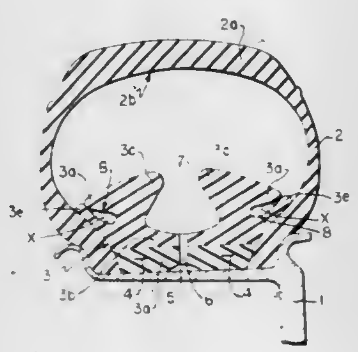

1. An emergency running ring for a tubeless pneumatic tire adapted to be mounted on a tire rim, comprising
(a) a bottom reinforced base for mounting the ring on such rim,
(b) at least one radial opening in said ring to permit air to be admitted to the interior of the tire,
(c) cavity means formed in said ring adapted to be filled with a lubricating material,
(d) sealing lips and counter lips directly engaging each other for closing said cavity means and sealing said lubricant therein when said tire is mounted on said rim and under pressure, one of said sealing lips and counter lips being formed with a denticulated sealing surface thereby to provide a plurality of sealing faces between said lips, thereby sealing the cavity filled with lubricant,
(e) flange means integrally formed with said sealing lips and extending radially upwardly with respect to said sealing lips for engagement by the inside of the tire during loss of air,
said sealing lips and flange means being formed and arranged such that when said flange means are depressed, lever action causes said sealing lips to move so as to open said cavities and permit said lubricating material to be released to reduce friction between said tire and said running ring.

4,371,025
REINFORCING ANNULAR STRUCTURE OF RADIAL TIRES

Cesare Canevari, and Aldo Signorini, both of Milan, Italy, assignors to Societa' Pneumatici Pirelli S.p.A., Milan, Italy
Filed Jun. 9, 1981, Ser. No. 271,963
Claims priority, application Italy, Jul. 8, 1980, 23297 A/80
Int. Cl.^{3} B60C *3/00, 9/20*
U.S. Cl. 152—352 R **4 Claims**

1. A vehicle tire comprising a radial carcass having a crown point on a meridian plane, a tread, an annular reinforcing structure between the carcass and tread, said annular reinforcing structure comprising at least two reinforcing layers of metal monofilaments, each monofilament being embedded in said reinforcing layers as a single individual, metallic element spaced from the adjacent filaments, said monofilaments of each layer being parallel to one another and inclined at an angle between 10° and 30° with respect to the direction of the equatorial plane of the tire, the monofilaments of one layer crossing those of the adjacent layer, said carcass having a radius of

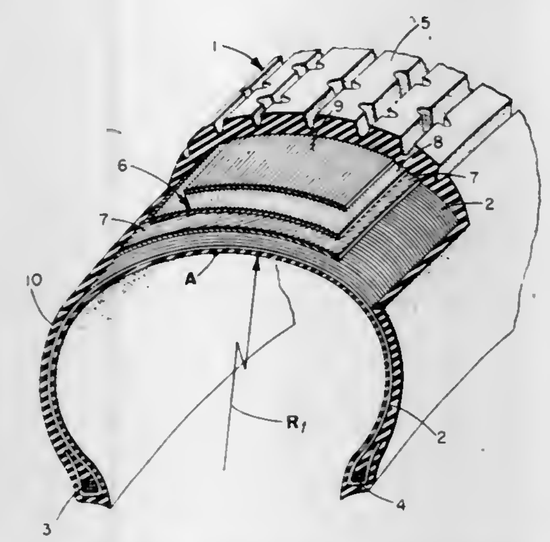

curvature on the meridian plane in its crown point of at least 400 mm.

4,371,026
AIR CONDITIONER SUPPORTED CURTAIN HOLDER

Pauline K. Miller, deceased, late of Baltimore, Md., and by Norman Miller, legatee, 520 Cedar Hill Rd., Baltimore, Md. 21225
Filed Jul. 8, 1980, Ser. No. 167,153
Int. Cl.^{3} A47H *1/18*
U.S. Cl. 160—349 D **8 Claims**

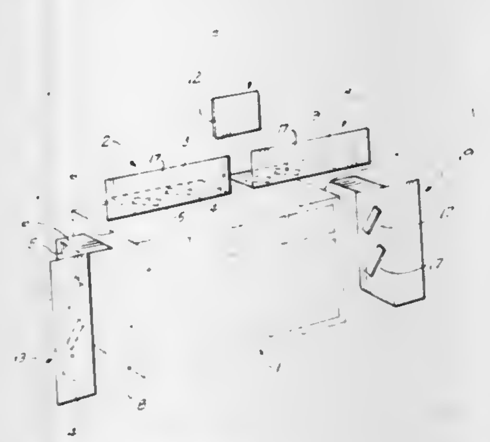

1. A curtain holder, comprising:
a. panel means for holding curtains or drapes out of the path of air flow of a window air conditioner unit, wherein said panel means are comprised of top panel means disposed adjacent to the top of the air conditioner unit and side panel means disposed adjacent to the sides of the air conditioner unit, and wherein said top and side panel means have two planar portions, a first planar portion to which air conditioner attaching means are attached, and a second planar portion perpendicular to said first planar portion which holds the curtains or drapes out of the path of air flow of the window air conditioner unit;
b. a means for attaching said panel means to the window air conditioner unit.

4,371,027
ECONOMIZER WITH AN INTEGRAL GAS BYPASS

Orval E. Jacobsen, 4270 E. 78th St., Tulsa, Okla. 74136
Continuation-in-part of Ser. No. 612,043, Sep. 10, 1975, abandoned. This application Aug. 8, 1977, Ser. No. 822,712
Int. Cl.^{3} E28F *19/00*
U.S. Cl. 165—1 **2 Claims**

1. A method for controlling corrosion in exhaust gas heat exchanger comprising the steps of:

(a) determining the dew point temperature of the corrosive elements of the exhaust gases;
(b) moving the exhaust gases through a fluid heat exchanger;
(c) detecting the temperature of the exhaust gases downstream of the heat exchanger;

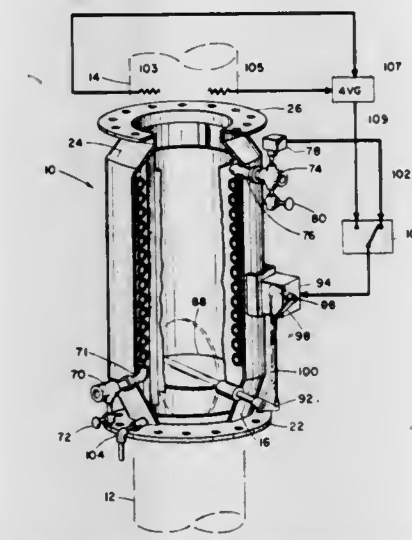

(d) comparing the detected temperature with the dew point temperature;
(e) bypassing the exhaust gases around the heat exchanger when the detected temperature approaches or falls below the dew point temperature.

4,371,028
HEAT STORAGE DEVICE

Egon Helshoj, Holte, Denmark, assignor to Effex Innovation A/S, Copenhagen, Denmark
PCT No. PCT/DK80/00008, § 371 Date Sep. 17, 1980, § 102(e) Date Sep. 17, 1980, PCT Pub. No. WO80/01509, PCT Pub. Date Jul. 24, 1980
PCT Filed Jan. 18, 1980, Ser. No. 206,484
Claims priority, application Denmark, Jan. 22, 1979, 261/79
Int. Cl.^{3} F28D *21/00*
U.S. Cl. 165—10 **10 Claims**

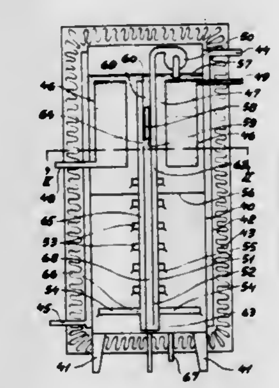

1. A heat storage device comprising a container which contains a storage material for storing and supplying heat during melting and solidification, respectively, and means including a pump for pumping a heat carrying medium through a circuit in which it is brought into direct heat exchange contact with the storage material, characterized in that said circuit comprises a plurality of channels connecting the delivery side of the pump to a plurality of outlet openings or groups of outlet openings distributed in the storage material, and that the device includes valve means located outside the storage material for controlling flow of said heat carrying medium through at least two of said channels connecting the delivery side of the pump and the outlet openings or groups of outlet openings in response to variations in flow resistances.

4,371,029
LATENT HEAT ACCUMULATOR

Friedrich Lindner, Stuttgart, and Kurt Scheunemann, Emmendingen, both of Fed. Rep. of Germany, assignors to Deutsche Forschungs- und Versuchsanstalt für Luft- und Raumfahrt e.V., Bonn, Fed. Rep. of Germany
Filed Mar. 18, 1981, Ser. No. 244,969
Claims priority, application Fed. Rep. of Germany, Mar. 20, 1980, 3010625
Int. Cl.^{3} F28D *21/00*
U.S. Cl. 165—10 **9 Claims**

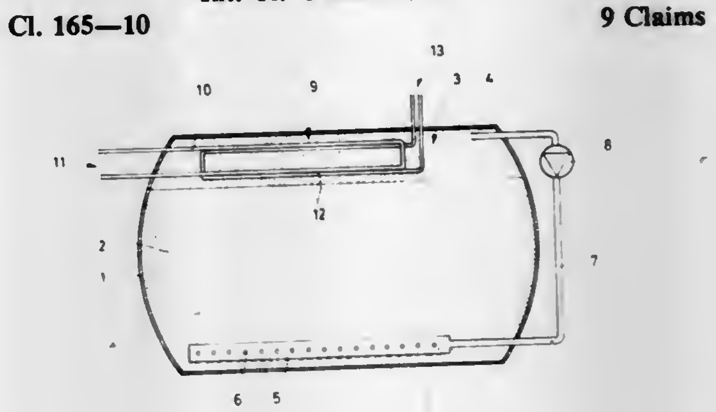

1. Latent heat accumulator comprising a vessel for receiving a latent heat storage medium and a circuit for a heat exchanger medium, said heat exchanger medium being immiscible with the latent heat storage medium, having a different density to the heat storage medium and being openly conveyed through the storage medium, a collecting chamber being provided in the vessel for the heat exchanger medium, a heat exchanger being disposed in said collecting chamber, an external heat carrier medium flowing through said heat exchanger, this heat exchanger bringing about a transfer of heat between heat carrier medium and heat exchange medium, characterized in that a first heat carrier medium adding heat and a second heat carrier medium withdrawing heat are conveyed in the heat exchanger (9) in separate conduit systems (11, 13), the two conduit systems (11, 13) being in heat-conductive contact with each other and with the surrounding heat exchanger medium (4).

4,371,030
Patent Not Issued For This Number

4,371,031
ARRANGEMENT FOR AIR CONDITIONING CONTROL IN BUILDINGS

Karl-Gustav Bernander, and Lars Skogström, both of Stockholm, Sweden, assignors to Aeromator Trading Co. AB and AB Strangbetong, both of Stockholm, Sweden
PCT No. PCT/SE79/00218, § 371 Date Jun. 25, 1980, § 102(e) Date Jun. 12, 1980, PCT Pub. No. WO80/00858, PCT Pub. Date May 1, 1980
PCT Filed Oct. 25, 1979, Ser. No. 198,105
Claims priority, application Sweden, Oct. 25, 1978, 7811114
Int. Cl.^{3} F24H *3/02*
U.S. Cl. 165—54 **8 Claims**

1. An arrangement for air condition control of buildings of the type having a roof constructed of self-supporting roof plates having substantial mass and a relatively wide span, and a covering layer supported on the outside of the roof plates to provide an air gap between said roof plates and said covering layer for passing air therethrough, comprising ducts formed in said roof plates, an opening in one end of said ducts, an air conditioning unit, air intakes connected to the interior of the

building, means for connecting said opening to said air conditioning unit and to said intakes, and one or more upward con-

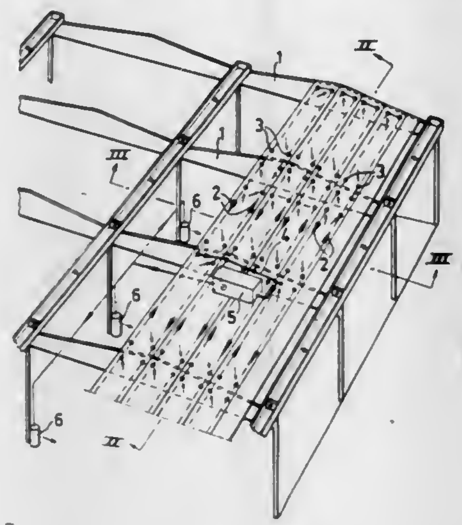

necting means connecting said ducts to said air gap located thereabove.

4,371,032
HEAT TRANSFER SYSTEM
Horace J. Buttner, 1501 Palos Verdes Dr., N. #127, Harbor City, Calif. 90710
Filed Dec. 22, 1980, Ser. No. 219,022
Int. Cl.³ F28D *11/02;* **F28G** *15/04*
U.S. Cl. 165—91 **25 Claims**

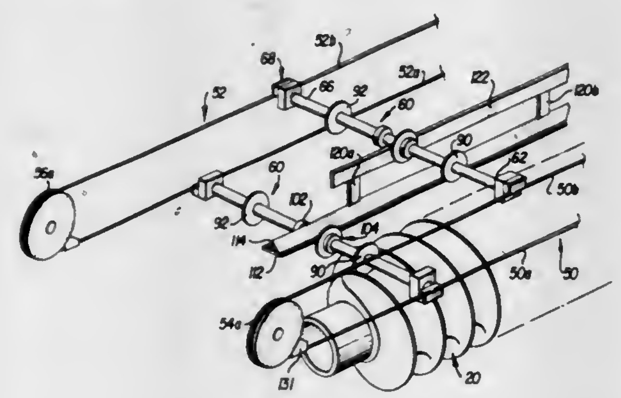

1. Heat transfer apparatus with endless loop guided volute passage scraping means, comprising:
a housing including an inlet for introducing workable material into said housing and further including an outlet for discharge of said workable material from said housing;
at least first and second endless loop members positioned in spaced planes extending in said housing;
loop support means connected with said housing and including at least two oppositely and outwardly curved surfaces for supporting each of said first and second endless loop members in its respective plane;
at least one bridging member extending between and attached to corresponding portions of said first and second endless loops for causing said bridging member to move in a loop path defined by motion of said endless loop members;
a mixing member mounted for rotation in said housing adjacent at least a portion of the loop path traversed by said bridging member, said mixing member including at least one flute at its outer surface defining at least one volute passageway;
means mounted in said housing for transferring heat to or from said workable material;
scraper means having an outline corresponding to at least a portion of the cross-section of said volute passageway and connected with said first and second endless loop members through said bridging member for scrapingly contacting and cleaning the walls of said volute passageway during rotation of said mixing member;
whereby said first and second endless loop members repetitively introduce said scraper means into contact with an upstream portion of said volute passageway and, after movement of said scraper means to a downstream portion of said passageway while in contact with and during rotation of said rotatable member, convey said scraper means from said downstream portion to said upstream portion.

4,371,033
GAS-TO-GAS HEAT EXCHANGER
Gunnar Stendahl, Linköping, Sweden, assignor to STAL-LAVAL Apparat AB, Linköping, Sweden
Filed Mar. 13, 1981, Ser. No. 243,556
Int. Cl.³ F28D *13/00;* **F28C** *3/16*
U.S. Cl. 165—104.16 **5 Claims**

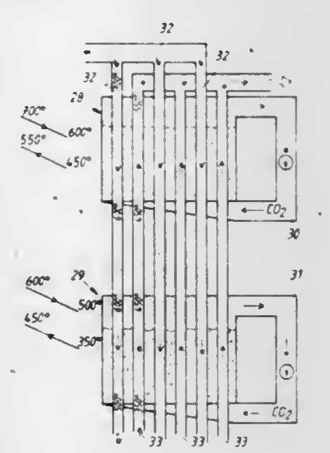

1. A gas-to-gas heat exchanger, comprising at least two chambers each enclosing a bed of fluidizable particulate material, a first set of tubes and a second set of tubes passing substantially vertically through at least part of each of said chambers; said first and second sets of tubes being mutually disposed in spaced-apart relationship; means for introducing a first gaseous medium at a first temperature into said first set of tubes for downward passage therethrough, means for introducing a second gaseous medium at a second temperature, lower than said first temperature, into said second set of tubes for upward passage therethrough, and means for passing a third gaseous medium through said chambers for creating fluidized beds of said particulate material, whereby said fluidized beds serve as heat transfer media from said first tube sets to said second tube sets, thus obtaining heat transfer in a plurality of temperature stages, one for each of said chambers.

4,371,034
PLATE TYPE EVAPORATOR
Ken'ichi Yamada; Hiroyuki Sumitomo; Akira Horiguchi, and Kenzo Masutani, all of Osaka, Japan, assignors to Hisaka Works, Limited, Osaka, Japan
Division of Ser. No. 63,403, Aug. 3, 1979. This application Jan. 27, 1981, Ser. No. 228,755
Int. Cl.³ F28B *9/08, 9/02*
U.S. Cl. 165—108 **1 Claim**

1. A plate type evaporator comprising a plurality of vertically extending plate elements assembled face-to-face to define therebetween alternate channels for a heating medium and for a liquid to be evaporated, a liquid circulation passageway establishing communication between the top and bottom of said liquid channels, a vapor taking-out port provided in the top of said circulation passageway, and a liquid supplying nozzle provided in said circulation passageway for supplying liquid to compensate for the amount evaporated, said circulation passageway allowing the natural circulation of the liquid which is brought about by the pumping effect due to the evaporation of liquid, the injection of the supply liquid from said nozzle accelerating said circulation, whereby flow is imparted to the liquid along the heat transfer surfaces of the plate ele-

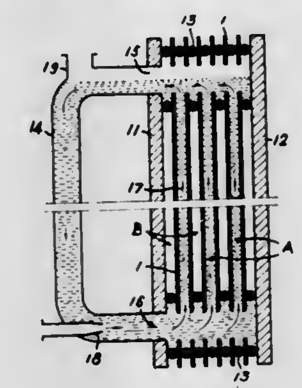

ments, each plate element being formed with a porous layer on its heat transfer surface facing the associated liquid channel.

4,371,035
TUBE SUPPORT GRID
Vincenzo Soligno, Via Volturno, 9, 27058 - Voghera, Italy
Filed May 16, 1979, Ser. No. 39,680
Claims priority, application Italy, May 17, 1978, 23511 A/78
Int. Cl.³ F28F *9/18*
U.S. Cl. 165—162 **8 Claims**

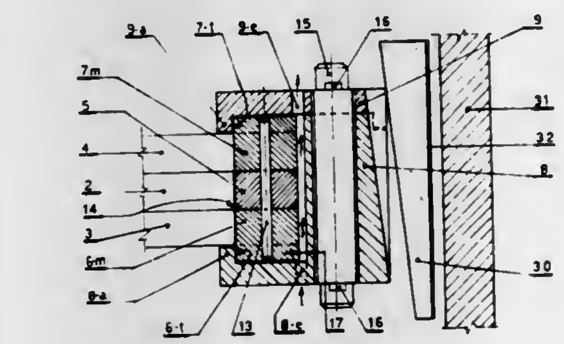

1. For use in a steam generator, heat exchanger and the like having a plurality of tubes located within a casing, a supporting grid for tubes, comprising:
a. a central reticular structure for supporting the tubes formed of a first material and consisting of a lower and an upper set of equally spaced main intersecting strips having interengaging main milled slots at the intersecting zones and equally spaced secondary milled slots therebetween, and a lower and an upper set of equally spaced secondary strips located in said secondary milled slots, said lower and upper main strips terminating with L-shaped ends inwardly facing each other respectively;
b. an inner annular frame of the same first material capable of receiving with a tight fit the ends of said strips and being higher than the reticular structure so that upper and lower projecting portions are created together with cleaning ducts;
c. an external annular frame connectable to the casing and formed of a second material and consisting of an external lower box ring and of an external upper cover ring capable of receiving and containing therein said projecting portions of the inner frame, axially extending and inwardly facing dogs being provided at the inner portion of said external frame; the inner frame and the external frame being assembled so that at room temperature said dogs of the external frame fit tightly to the inner cylindrical surface of said projecting portions while play exists between the external cylindrical surface of the inner frame and the internal cylindrical surface of the external frame for free thermal expansion of the two materials.

4,371,036
HEAT EXCHANGER, PARTICULARLY FOR HEAT PUMPS
Marc Fordsmand, Skovshovedvej 38, DK-2920 Charlottenlund, Denmark
Filed Jun. 4, 1980, Ser. No. 156,272
Int. Cl.³ F28D *7/02*
U.S. Cl. 165—163 **5 Claims**

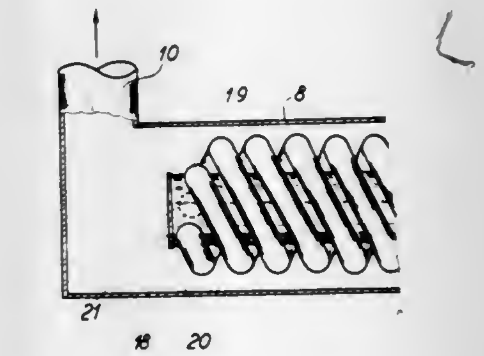

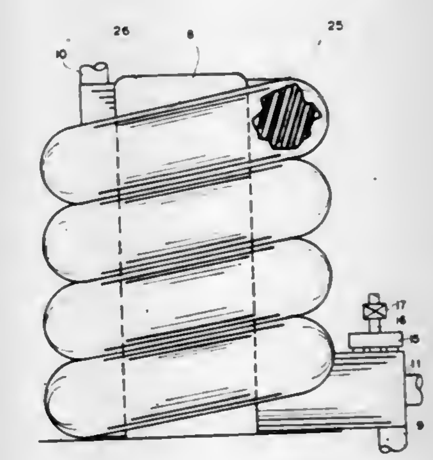

1. A heat exchanger, particularly for heat pumps, comprising at least one helical pipe forming part of a secondary part for the flow of a refrigerant, a mantle-pipe surrounding said at least one helical pipe and forming a primary part for the flow of a heat carrying medium, a core pipe also forming part of said secondary part, said at least one helical pipe being coiled around said core pipe and extending substantially from one end to the other end of said mantle-pipe, both said helical pipe and said core pipe being in heat exchange relationship with the flow of the heat carrying medium in said mantle-pipe, refrigerant inlet means and outlet means both located outside said mantle-pipe, said at least one helical pipe being connected to said core pipe near said other end of said mantle-pipe and being connected near said one end to said refrigerant inlet means, said core pipe being connected near said one end to said refrigerant outlet means, said mantle-pipe having a heat carrying medium inlet at said first end and a heat carrying medium outlet at said other end, the center line of the turns of said at least one helical pipe extending horizontally or at an inclination small enough to ensure that the centrifugal force acting on a liquid refrigerant particle travelling through a turn will alternatively be added to and subtracted from the gravity of the same particle, said mantle-pipe with said helical pipe and said core pipe therein being bent to a compacted shape.

4,371,037

TRANSFER TERMINAL FOR OFFSHORE PRODUCTION

Marcel Arnaudeau, Paris, France, assignor to Institut Francais du Petrole, Rueil-Malmaison, France

Continuation-in-part of Ser. No. 11,817, Feb. 9, 1979, Pat. No. 4,265,313. This application Dec. 15, 1980, Ser. No. 216,452
Claims priority, application France, Feb. 14, 1978, 78 04330
Int. Cl.^{3} E21B *43/017*

U.S. Cl. 166—366 **12 Claims**

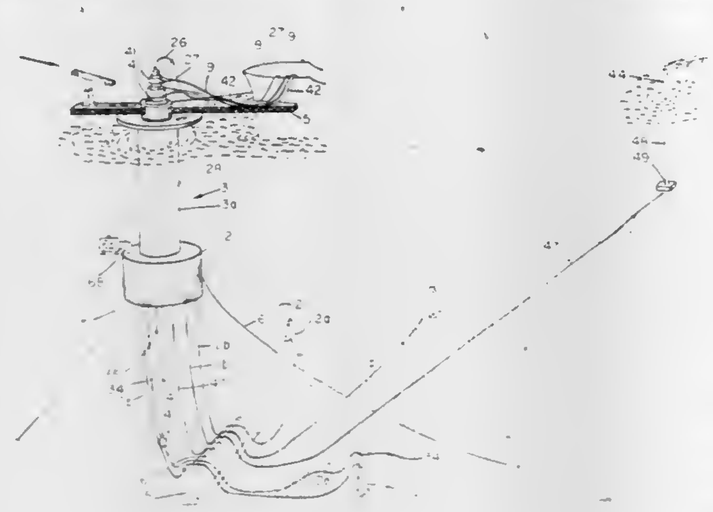

1. A mooring station and transfer terminal for off-shore hydrocarbon production from a plurality of underwater wells connected to a plurality of production lines, each line communicating with one of said wells, said mooring station and transfer terminal comprising:
at least one underwater production manifold communicating with said production lines;
at least one underwater circulation and safety manifold communicating with said plurality of underwater wells; at least one return circulation manifold communicating with said plurality of underwater wells; a riser comprising at least three coaxial pipes defining at least two annular space therebetween, said coaxial pipes including at least one production pipe communicating at its lower end with said production manifold, at least one circulation and safety pipe communicating at its lower end with said circulation and safety manifold, and at least one return circulation pipe communicating at its lower end with said return circulation manifold; and a surface facility comprising means for receiving the outflow of said at least one production pipe and communicating with the upper end thereof, said surface facility further comprising a source of safety fluid communicating with the upper end of said circulation and safety pipe.

4,371,038

APPARATUS AND METHOD FOR INJECTING FLUID INTO A WELL

William L. Abernathy, Lafayette, La.; Billy B. Bertram, Plano, Tex.; Anthony D. Davis, Carrollton, Tex., and Richard M. Ward, Arlington, Tex., assignors to Otis Engineering Corporation, Dallas and Exxon Production Research Company, Houston, both of, Tex.

Filed Dec. 8, 1980, Ser. No. 213,896
Int. Cl.^{3} E21B *33/129, 34/14, 41/02, 43/12*

U.S. Cl. 166—380 **27 Claims**

1. For use in injecting fluids into a well which includes a casing and a string of large capacity production tubing, an assembly comprising
a packer to be set in said casing adjacent to the well producing zone, said packer having a large bore;
twin flow means to be joined to the lower end of said string of production tubing; said twin flow means providing, side-by-side, a first large capacity passage communicating with said production tubing and a second small capacity passage opening from the upper end of said twin flow means; said twin flow means including, at its lower end, an inner large capacity tubing and an enclosed outer tubular housing; said inner tubing defining a continuation of said first passage, and the annulus between said outer housing and said inner tubing defining a continuation of said second passage;
an extensible, large bore, tubular housing means joined at its upper end to said outer housing of said twin flow means;
means for joining the lower end of said extensible tubular housing means to the upper end of said packer;
a length of large capacity inner tubing joined to said inner tubing of said twin flow means; said length of inner tubing being of a length to extend into said packer adjacent to the lower end thereof, when said extensible housing means is in its retracted condition;
said large capacity inner tubing defining an extension of said first large capacity passage for passing fluid from the producing zone; and the annulus between said inner tubing and the enclosing structure defining an extension of said second small capacity passage to pass injection fluid to the lower end of said inner tubing.

13. A method for providing production and injection passages in a producing wall having a casing and a string of large capacity production tubing, wherein the injection passage extends to a point very close to the producing zone of the well; including the steps

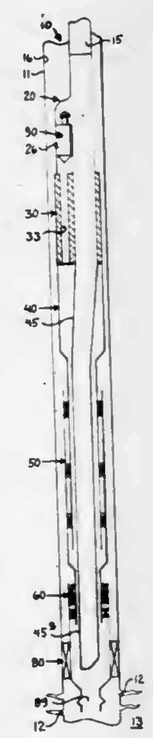

setting, in the casing, a packer having an internal passage of sufficient size to pass large capacity production tubing with an annular flow space therebetween;
suspending, from the lower end of said production tubing, an assembly including an upper twin flow means, a lower large bore extensible tubular housing means joined to said twin flow means, for joining to said packer, and a length of large capacity inner tubing;
providing, side-by-side, in said twin flow means, a first large capacity passage communicating with said string of production tubing and a second small capacity passage communicating with the annulus between said casing and said string of production tubing, with the lower end of said first passage terminating in a large capacity inner tubing and the lower end of said second passage terminating in the annulus between said inner tubing and an outer housing;
joining the upper end of said extensible housing means to said outer housing of said twin flow means;
providing said extensible housing means with releasable means for maintaining said housing in a retracted condition;
suspending said length of large capacity inner tubing from said inner tubing of said twin flow means to extend through said extensible housing means, and said packer to a point adjacent to the bottom thereof, when said extensible housing is in said retracted condition;
whereby said inner tubing provides an extension of said first large capacity passage for passing production fluid from the producing zone; and whereby the annulus between said inner tubing and the enclosing structure provides an extension of said second passage for passing injection fluid from the annulus between said casing and said string of production tubing to the lower end of said inner tubing.

4,371,039

TOOL BAR CONTROL FOR AGRICULTURAL IMPLEMENT

Wayne J. Schaaf, and Bennie J. Boswell, both of Kewanee, Ill., assignors to Chromalloy American Corporation, St. Louis, Mo.

Filed Apr. 13, 1981, Ser. No. 253,571
Int. Cl.^{3} A01B *63/22, 63/32*

U.S. Cl. 172—244 **10 Claims**

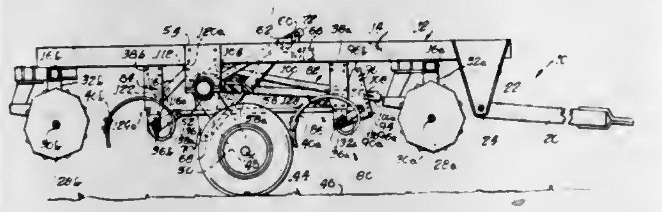

1. An agricultural implement comprising, in combination,
a frame,
at least two tool bars supported by said frame for rotation about their longitudinal axes and each carrying at least one ground working tool thereon for movement therewith,
wheel means mounted on said frame and movable between a lowered transport position wherein said frame and ground working tools are raised for transport and a raised position wherein said frame and ground working tools are lowered for ground working operation,
operator means operatively associated with said wheel means and adapted to move said wheel means between its said lowered and raised positions,
and a control mechanism operatively associated with said wheel means and said tool bars so as to effect predetermined rotation of said tool bars when said wheel means is moved between its said lowered and raised positions, said control mechanism including first linkage means interconnecting one of said tool bars to said wheel means so that movement of said wheel means from its said lowered to its said raised positions effects rotation of said one of said tool bars in a predetermined direction,
second linkage means inteconnecting the other of said tool bars to said wheel means so that movement of said wheel means from its said lowered to its said raised positions is inoperative to effect rotation of said other of said tool bars through said second linkage means, while movement of said wheel means from its said raised to its said lowered positions is operative to effect rotation of said other of said tool bars through said second linkage means in a direction opposite to said predetermined direction,
and third linkage means directly interconnecting said tool bars so that rotation of either of said tool bars effects a corresponding rotation of the other of said tool bars,
wherein said first linkage means includes a connector plate mounted on said one of said tool bars for movement therewith, and a pair of actuator links pivotally connected to said connector plate and interconnecting said connector plate to said wheel means, and,
wherein each of said actuator links has lost motion connection with said connector plate, one of said actuator links being adapted to effect rotation of said connector plate and said one of said tool bars in said predetermined rotational direction in response to movement of said wheel means from its said lowered to its said raised positions, and the other of said actuator links being adapted to limit the extent of said rotation of said one of said tool bars in said predetermined rotational direction.

4,371,040

ANTI-BUCKLING DEVICE FOR MINE-ROOF BOLTING MACHINES

William C. Orthwein, P.O. Box 3332, Carbondale, Ill. 62901

Division of Ser. No. 20,117, Mar. 13, 1970, Pat. No. 4,328,872. This application Aug. 26, 1981, Ser. No. 296,369
Int. Cl.^{3} B23Q *15/00;* **F21C** *5/16*

U.S. Cl. 173—11 **6 Claims**

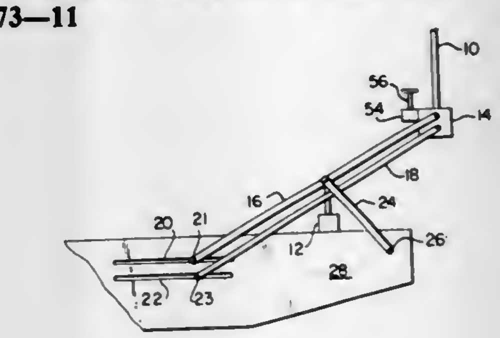

1. Apparatus for use with an underground mine shaft roof bolting machine having a torque motor, a pinning rod of predetermined diameter held for rotation by said torque motor, controllable means for exerting upward thrust on said torque motor to force said pinning rod upwardly into the roof of a mine shaft, and means for manually controlling said upward thrust means, comprising:
light source means positioned for projecting a beam of light having a width not substantially larger than the diameter of said pinning rod along and substantially parallel to the length of said pinning rod;
means operatively connected for detecting said light beam and for enabling said controllable upward thrust means only when said light beam is detected, whereby buckling of said pinning rod will interrupt said light beam and cause said upward thrust means to be disabled.

4,371,041

MULTI-PURPOSE MOBILE DRILL RIG

Floyd W. Becker, and Richard R. Regimbal, both of Calgary, Canada, assignors to Drill Systems, Inc., Calgary, Canada

Filed Sep. 15, 1978, Ser. No. 942,550
Int. Cl.^{3} E21B *7/02;* **E21C** *11/02*

U.S. Cl. 173—28 **30 Claims**

1. A drill rig for drilling a hole in the ground comprising:
(a) a mast, having a longitudinal slide means at one mast face thereof for enabling longitudinal movement therealong, said mast being adapted to be set upright at one side of a drill hole to be drilled with the rig, with said mast face and said slide means thereon facing, and being at a selected spacing from and being parallel to the axis of the drill hole;
(b) a slide frame mounted upon said longitudinal slide means and lifter-pulldown means in the mast for causing movement of said slide frame along the longitudinal slide means;
(c) a lateral shifting means on said slide frame shiftable outwardly from said mast face and the slide frame in the direction of the drill hole;
(d) a drill carrier attached to said lateral shifting means to be shifted between a first position adjacent an outward side of said slide frame and a second position spaced outwardly away from said mast and slide frame thereon;
(e) first and second separate drill mechanism means and drill pipe means being mountable upon said drill carrier for drilling the drill hole, with the drill pipe means being

aligned with the drill hole axis after the drill carrier is selectively shifted to one of the first and second aforesaid positions; and

(f) one of said separate drill mechanism means and drill pipe means being aligned with the drill hole axis when said drill carrier is at one of said first and second positions, and the

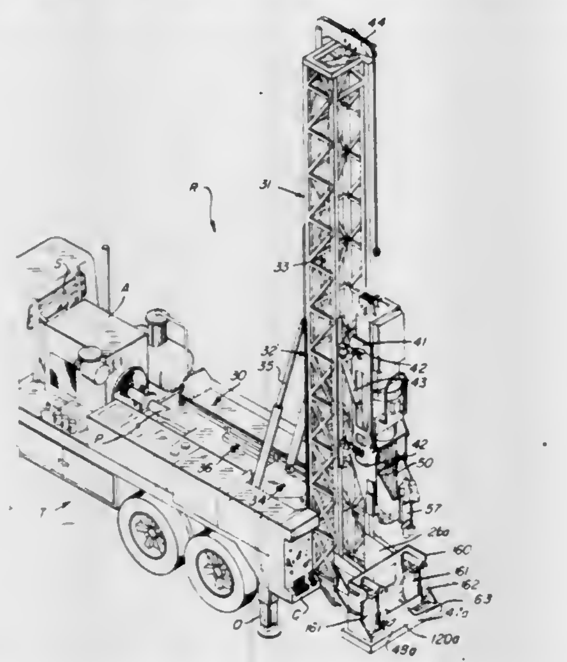

other of said separate drill mechanism means and drill pipe means being aligned with the drill hole axis when said drill carrier is at the other of said first and second positions whereby to permit quick-change selective drilling with said first and second separate drill mechanism means and drill pipe means.

4,371,042

FLUID OPERATED RAM

Hans Kühn, Hamburg, Fed. Rep. of Germany, assignor to Koehring GmbH, Hamburg, Fed. Rep. of Germany

Filed Dec. 31, 1979, Ser. No. 103,521

Claims priority, application Fed. Rep. of Germany, Jan. 4, 1979, 2900221

Int. Cl.³ B25D *9/00;* **E21B** *1/00*

U.S. Cl. 173—127 **24 Claims**

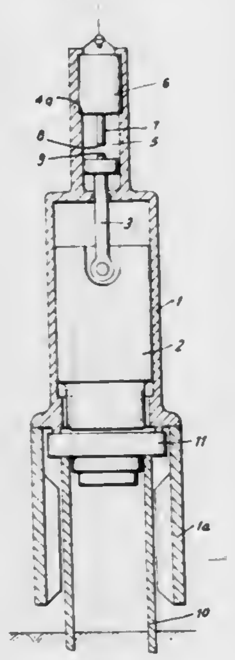

1. A fluid operated ram for driving a member into the ground, comprising an upright housing having an axis; a striker body guided in said housing for reciprocation along said axis between an active stroke and a return stroke; an impact transmitter between said striker body and the member to be driven into the ground upon striking of the striker body against said impact transmitter; a cylinder disposed at the upper end of the housing coaxially therewith; a working piston reciprocable arranged in said cylinder and dividing the latter into a first and a second chamber; a piston rod connecting said working piston with said striker body for simultaneous movement in axial direction; first passage means for connecting said first and said second chamber with a source of pressure fluid and second passage means for connecting said first chamber to a space for released fluid; control means comprising a valve slide means cooperating with said first and second passage means and being movable coaxial with said piston rod between a first position connecting at least one chamber with said first passage means and a second position connecting said first chamber with said second passage means, said valve slide means being formed with an axial bore having an open end facing said working piston; means for moving said valve slide means to said second position in dependence on the position of the striker body relative to said housing and comprising a valve rod axially guided in said bore of said valve slide means and having an end portion projecting into said first chamber, means cooperating with said valve rod for biasing the same toward said working piston, and means for limiting axial movement of said valve slide means and said valve rod relative to each other, said valve rod having a free end in said first chamber and said working piston having a contact face opposite said free end of said valve rod, the valve rod having a length adjusted so that when said striker body during its active stroke is spaced at least a predetermined distance from said impact transmitter, said free end of said valve rod abuts against said contact face and when the striker body is spaced from said impact transmitter a distance smaller than said predetermined distance, said free end of said valve rod is disengaged from said contact face; and wherein said working piston is a differential piston having a larger piston surface facing said first chamber and a smaller piston surface facing said second chamber and wherein said passage means permanently connects said second chamber with said source of pressure fluid.

4,371,043

VIBRATION PREVENTION HANDLE FOR A VIBRATION DEVICE

Masaharu Kubokawa, 11-8, Minaminagasaki 3-chome, Toshima-ku, Tokyo, Japan

Filed Mar. 11, 1981, Ser. No. 242,428

Claims priority, application Japan, Mar. 13, 1980, 55-31918

Int. Cl.³ B25G *1/00*

U.S. Cl. 173—162 H **11 Claims**

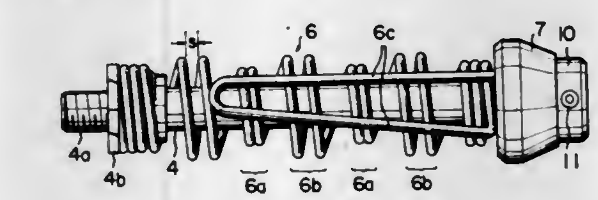

1. A vibration prevention handle for a vibration device, which comprises:

(a) a handle fixed to a vibration device;

(b) a small-diameter close-coiled and larger-diameter open-coiled helical spring provided so as to cover said handle, one end of said helical spring being freely rotatably mounted to said handle, the other end of said helical spring being fixedly mounted to said handle,

whereby vibration and shock generated from the vibration device can be effectively damped.

4,371,044

SIMULTANEOUS MULTIGUN HIGH DENSITY MULTIPHASE PERFORATING UNIT

Roy L. Willig, Lafayette; Edward J. LeBlanc, III, Youngsville, and Harold Airhart, Sr., Lafayette, all of La., assignors to CRC Wireline, Inc., Grand Prairie, Tex.

Filed Aug. 22, 1980, Ser. No. 180,449

Int. Cl.³ E21B *43/116*

U.S. Cl. 175—4.6 **11 Claims**

1. A perforating unit for high density, multiphase well perforating operations which comprises:

(a) a plurality of elongated cylindrical perforating gun barrels having firing axes at predetermined angles one relative to the other and adapted to receive an array of charges;

(b) a multiport top sub securing together the upper ends of said barrels, with said barrels parallel to each other;

(c) a cablehead on said top sub; and

(d) a multiport bottom sub securing together the lower ends of said barrels and including means to detonate said charges.

4,371,045

METHOD AND APPARATUS FOR RECOVERING UNSTABLE CORES

Patrick L. McGuire, and Bruce L. Barraclough, both of Los Alamos, N. Mex., assignors to The United States of America as represented by the United States Department of Energy, Washington, D.C.

Filed Apr. 1, 1981, Ser. No. 249,783

Int. Cl.³ E21B *25/02, 25/08, 49/02*

U.S. Cl. 175—17 **12 Claims**

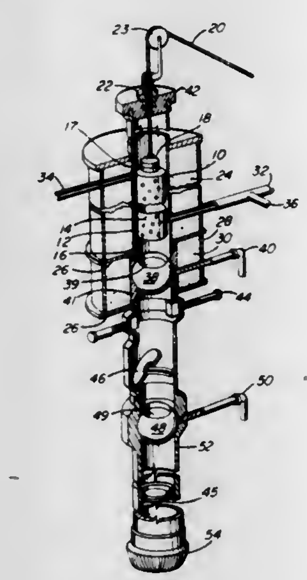

1. A method of obtaining for laboratory study substantially intact cores of hydrocarbon hydrates, said method comprising:

(a) drilling a core out of a formation in the earth;

(b) very quickly bringing said core located within a core barrel open at its lower end up above the earth surface;

(c) allowing drilling fluid to drain out of said core barrel and away from said core; and then

(d) passing cryogenic fluid in contact with said core located within said core barrel while said core and said core barrel are located within a chilling vessel which is formed from the upper portion of the outer pipe which houses said core and said core barrel, thus forming a stabilized core.

4,371,046

APPARATUS FOR AND METHOD OF DRILLING A HOLE INTO THE GROUND

Vernon Read, 550 N St., SW., Washington, D.C. 20024

Filed Apr. 21, 1980, Ser. No. 141,977

Int. Cl.³ E21B *7/02*

U.S. Cl. 175—57 **13 Claims**

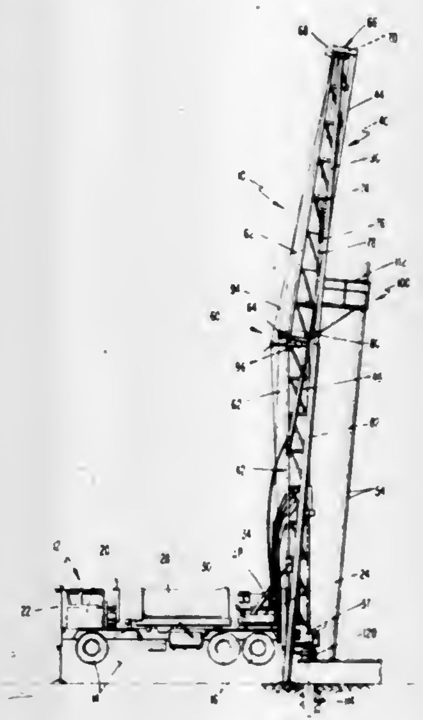

1. A drilling rig adapted to be carried by a vehicle normally having a horizontal flat surface comprising a mast having upper and lower sections, each having a longitudinal axis, the lower section being mounted on the surface, the upper section being secured to the lower section so the longitudinal axes of the upper and lower sections are offset at a predetermined acute angle, a rotary power drill head translatable along the length of the lower section, the power drill head including an aperture in which drill pipe is secured, a drawworks on the vehicle, cable means extending from the drawworks over pulley means at the top of the upper section and thence downwardly, means for controlling the angle of the surface so that during drilling the surface is horizontal and the aperture is aligned with a drill hole through which drilling pipe extends and during pipe hoisting the pulley means is aligned with the hole so a portion of the cable means extends from the pulley means in line with the hole, the cable means portion being attached to the pipe during hoisting, a sheave at the intersection of the two sections, said sheave being positioned and the axes being offset so said portion of the cable means can be paid over said sheave and extend in tension to support said drill head during drilling and said portion of the cable means can be removed from said sheave during hoisting.

4,371,047

AGRICULTURAL TRACTOR HAVING REVERSE AIR FLOW COOLING

Richard A. Hale, Downers Grove, and Richard G. Hennessey, Oak Lawn, both of Ill., assignors to International Harvester Company, Chicago, Ill.

Filed Apr. 2, 1980, Ser. No. 136,870

Int. Cl.³ B60K *11/06*

U.S. Cl. 180—54 A **12 Claims**

1. In an off-highway vehicle supported on a plurality of wheels said vehicle comprising an enclosed engine compartment having an open bottom and an engine compartment evacuation duct; an enclosed heat exchanger compartment having a top air entry port, an evacuation duct air delivery port for communication with said engine compartment evacuation duct and an air discharge port; a heat exchanger mounted in said heat exchanger compartment between said top air entry port and said air discharge port; an air flow inducing fan lo-

cated in said heat exchanger compartment between said heat exchanger and said air discharge port for drawing air through said heat exchanger from said top air entry port and further drawing air from said engine compartment evacuation duct wherein said enclosed engine compartment comprises:

a left side panel extending longitudinally from a rear portion of said enclosed engine compartment to said air discharge port of said enclosed heat exchanger compartment and said left side panel extending vertically from said bottom of said enclosed engine compartment and the bottom of said enclosed heat exchanger compartment to a top of said enclosed engine compartment and to a top of said enclosed heat exchanger compartment;

a right side panel extending longitudinally from the rear

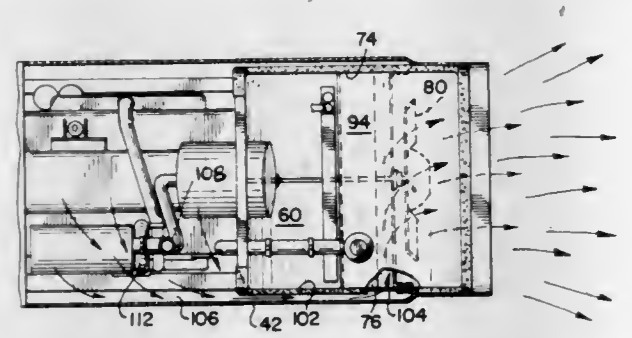

portion of said enclosed engine compartment to said air discharge port of said enclosed heat exchanger compartment and said right side panel extending vertically from the bottom of said enclosed engine compartment and the bottom of said heat exchanger compartment to a top of said enclosed engine compartment and to a top of said enclosed heat exchanger compartment, said right side panel further having a raised portion projecting outwardly therefrom for forming said engine compartment evacuation duct on an inner surface of said panel and extending longitudinally from said enclosed engine compartment to said evacuation duct air delivery port;

the continuous unperforated hood sheet covering said engine compartment extending from the top of said left side panel to the top of said right side panel.

4,371,048
LATCH FOR SIDE PANEL OF ENGINE HOOD
Kenneth N. Hansen, Waukesha, Wis., assignor to Allis-Chalmers Corporation, Milwaukee, Wis.
Filed Oct. 16, 1980, Ser. No. 197,503
Int. Cl.³ B62D *25/12*
U.S. Cl. 180—69 R **7 Claims**

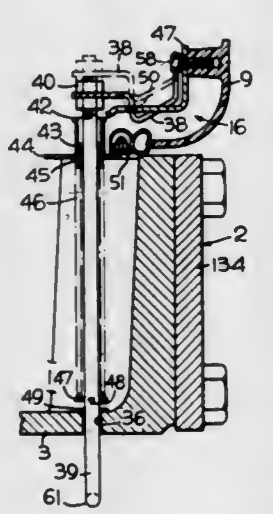

1. A vehicle having an engine hood and latching means comprising, a vehicle chassis including a front axle support means mounted on a side frame, said front axle support defining vertical walls connected to said side frame, with a floor portion extending between said walls, means defining a closed auxiliary compartment including a grille and a radiator mounted on said front axle support means, an engine hood including side panels extending over said grille and radiator and downwardly to said front axle support, a latch having a latch hook, a panel anchor mounted on the front portion of each of said panels for engaging said latch hook in the latched position, means pivotally suspending said side panels from their upper edges, a latch mounted on said vehicle chassis including a U-shaped handle having ends connected to said latch hook extending vertically through apertures in the floor portion of the axle support means inwardly of said panel, a latch hook on said latch engaging said panel anchor in the latched position, resilient means including springs on said latch handle biasing said latch hook downwardly to engage said panel anchor in the latched position, a latch cam on said latch hook formed by a downwardly extending curved portion on said latch hook, said panel anchor defining a downwardly curved leading edge for engagement with said latch cam to raise said latch hook and overcome the force of said resilient means to engage said latch when said panel is swung inwardly to close said compartment, said handle on said latch extending externally of said auxiliary compartment for manually overcoming the force of said resilient means and thereby releasing said latch.

4,371,049
STEERING AXLE
Manfred Goeft, and Dieter Maurer, both of Friedrichshafen, Fed. Rep. of Germany, assignors to Zahnradfabrik Friedrichshafen A.G., Friedrichshafen, Fed. Rep. of Germany
Filed May 30, 1980, Ser. No. 154,919
Claims priority, application Fed. Rep. of Germany, Jun. 2, 1979, 2922660
Int. Cl.³ F16H *3/44*
U.S. Cl. 180—255 **14 Claims**

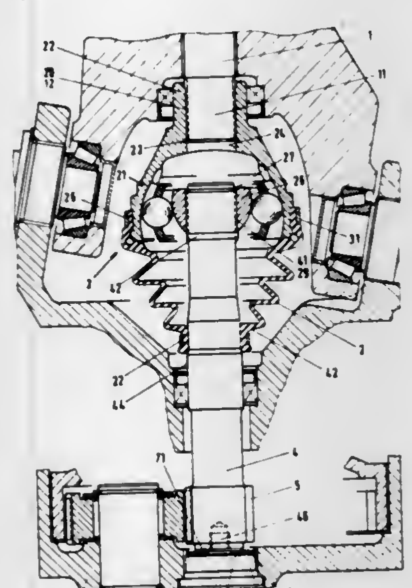

1. A steering axle comprising a steering shaft adapted to be drivingly connected with means for receiving a wheel; a shaft joint adapted to separably connect the steering shaft with a driven shaft; a joint housing for the shaft joint, said joint housing including a bell-shaped component and boot means, the bell shaped component and boot means collectively enclosing the shaft joint; steering housing means about the bell shaped component and boot means, said steering housing means having relatively movable housing components, there being an aperture between the housing components when the steering shaft is located at least at a predetermined transverse angle relative to the driven shaft, such aperture being sufficiently large to permit the shaft joint and boot means to be removed apart from the driven shaft, each of the steering shaft, the shaft joint and the boot means being removable apart from each other and from the driven shaft while the driven shaft and wheel receiving means remain substantially in position.

4,371,050
FUEL-CUT CONTROL APPARATUS
Kenji Ikeura, Yokosuka, Japan, assignor to Nissan Motor Company, Limited, Yokohama, Japan
Filed Feb. 15, 1980, Ser. No. 121,785
Claims priority, application Japan, Feb. 16, 1979, 54-16088; Mar. 30, 1979, 54-38232
Int. Cl.³ B60K *41/02;* F02D *5/00*
U.S. Cl. 180—271 **10 Claims**

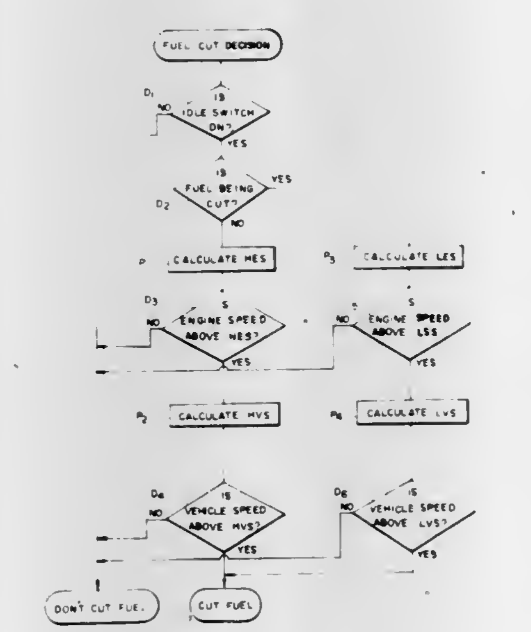

1. A fuel supply system for supplying fuel to an internal combustion engine in an automotive vehicle, comprising:

(a) a first sensor for sensing a closed position of a throttle valve;

(b) a second sensor for sensing the speed of rotation of said engine;

(c) a third sensor for sensing the speed of said vehicle;

(d) a control circuit for providing first and second signals in accordance with the sensed engine operating conditions, said control circuit being adapted to compare, in the presence of the second signal, the engine speed with a first engine speed reference level and the vehicle speed with a first vehicle speed reference level and to change said second signal to said first signal when

(i) said throttle valve is in its closed position,

(ii) said engine speed is above said first engine speed reference level, and

(iii) said vehicle speed is above said first vehicle speed reference level;

said control circuit being operable to compare, in the presence of said first signal, the engine speed with a second engine speed reference level lower than the first engine speed reference level and the vehicle speed with a second vehicle speed reference level lower than the first vehicle speed reference level and to maintain the first signal only when

(i) the throttle valve is in its closed position,

(ii) the engine speed is above the second engine speed reference level, and

(iii) the vehicle speed is above the second vehicle speed reference level; and

(e) means responsive to the first signal from said control circuit for cutting off the supply of fuel to said engine, said means being responsive to the second signal from said control circuit for resuming the supply of fuel to said engine.

4,371,051
AUTOMATIC SWITCHING-OFF ARRANGEMENT
Rainer Achterholt, Paul-Zoll-Str. 3, D-8961 Waltenhofen 1, Fed. Rep. of Germany
Filed Sep. 23, 1980, Ser. No. 190,043
Claims priority, application Fed. Rep. of Germany, Sep. 28, 1979, 7927688[U]
Int. Cl.³ B60K *41/08*
U.S. Cl. 180—271 **1 Claim**

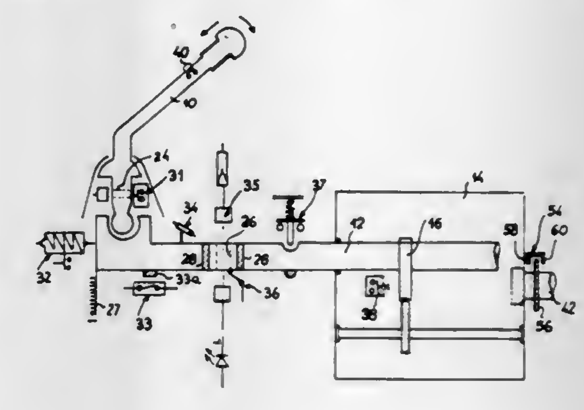

1. An improved arrangement for automatically switching-off the internal combustion engine of a motor car, the motor car being of the type having a power transmission system, gear shift means, a control lever operatively connected to the gear shift means for operating the gear shaft means, sensing means responsive to a movement of one of the control lever and the gear shaft means, the sensing means including a pair of sensing elements cooperating with one another and forming a switch, and time delay means operatively connected to said switch for delaying the switching-off of the internal combustion engine, the improvement comprising at least one of the pair of sensing elements which forms said switch being immovably fixed relative to the movement of one of the control lever and the gear shaft means, and the sensing means being responsive in the neutral position of the gear shift means and the control lever to close said switch and permit the transmission of a switch-off signal to activate said time delay means, and thereby initiate switching-off of the internal combustion engine.

4,371,052
ANTI-THEFT DEVICE FOR MOTOR VEHICLES
Warren J. Brandt, Burbank, Calif., assignor to O. C. Jenkins, Santa Ana, Calif.
Filed Mar. 31, 1980, Ser. No. 135,272
Int. Cl.³ B60R *25/00*
U.S. Cl. 180—287 **12 Claims**

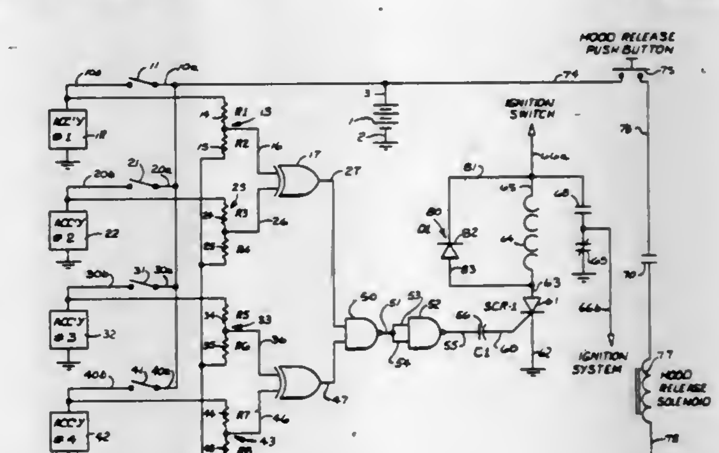

1. In a motor vehicle having a basic electrical circuit, at least two switch-operated accessories and lead wires connecting each switch to the respective accessory, an anti-theft device comprising relay-operated means rendering said vehicle ignition inoperable; a transistor-transistor-logic integrated circuit of the two-input Exclusive OR Gate type having first and

second input terminals and an output terminal, the first of said input terminals being electrically connected to the lead wire of one of said accessories and the second of said input terminals being electrically connected to the lead wire of the second of said accessories; and a normally open relay switch operably connected to said output terminal and arranged to activate said relay-operated means so as to inactivate the means rendering the vehicle ignition inoperable when one of said accessories is turned on and the other of said accessories is turned off.

9. In a motor vehicle having a basic electrical circuit, at least two accessory switches which normally can be turned on or off without affecting the operation of the ignition when the motor is running, and lead wires connecting each switch to an accessory, an anti-theft device comprising relay-operated means normally rendering the ignition of said vehicle inoperative; a normally open relay switch arranged to inactivate when closed, the means rendering the ignition inoperative; means activating said relay switch when one of said accessory switches is turned on and means for inactivating said relay switch when a second accessory switch is turned on.

4,371,053
PERFORATE TUBE MUFFLER
Adrian D. Jones, Edwardstown, Australia, assignor to Hills Industrie Limited, Edwardstown, Australia
Filed Mar. 12, 1981, Ser. No. 242,935
Claims priority, application Australia, Mar. 17, 1980, PE2781
Int. Cl.³ F01N *1/02*
U.S. Cl. 181—249 **1 Claim**

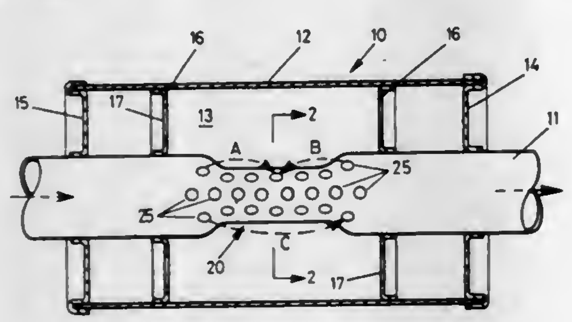

1. A muffler comprising a housing having end plates, stiffeners between the end plates, said stiffeners containing apertures which extend therethrough, a generally circular section conduit extending through said housing and being supported by said stiffeners and said end plates, said housing and conduit defining therebetween a muffler space,

an apertured zone extending along part of said conduit between said stiffeners wherein apertures through the conduit wall provide gas flow passages between the space within the conduit and the muffler space, the apertured zone having depressions in the conduit wall which vary its shape from a circular to a non-circular shape which comprises a throat, the dimensions being such that, when gas flows through said conduit, there is a first gas flow from the upstream end of the apertured zone into the muffler space and back into the throat of the conduit, a second gas flow from the downstream end of the apertured zone into the muffler space and back into the throat of the conduit, and a third gas flow from the upstream end of the apertured zone through the muffler space and back into the conduit through some of the apertures which are in the downstream end of the apertured zone.

4,371,054
FLOW DUCT SOUND ATTENUATOR
Leslie S. Wirt, Newhall, Calif., assignor to Lockheed Corporation, Burbank, Calif.
Continuation of Ser. No. 887,191, Mar. 16, 1978, abandoned. This application Dec. 21, 1979, Ser. No. 106,186
Int. Cl.³ F01N *1/10*
U.S. Cl. 181—252 **19 Claims**

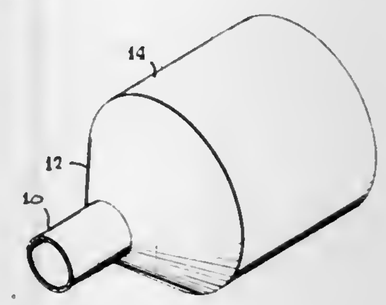

1. A sound attenuator for ducts containing fluid flow comprising:

(a) an elongated chamber having a fluid flow inlet and a fluid flow outlet;

(b) a dissipative sound absorptive structure within said chamber having an acoustic input impedance close to the characteristic impedance of said fluid for optimally receiving sound of a given low frequency, said absorptive structure being adapted to attenuate at least said low frequency sound;

(c) duct means within said chamber for allowing the passage of said fluid flow from said inlet to said outlet and having an acoustic input impedance substantially different from the characteristic impedance of said fluid at said low frequency to cause said low frequency sound to be reflected therefrom and to allow high frequency sound to pass therethrough, said sound absorptive structure being arranged with respect to said duct means to receive and attenuate the low frequency sound reflected by said duct means;

whereby sound propagation paths having substantially different input impedances are provided for said low and high frequency sounds.

4,371,055
METHOD OF MANUFACTURING A FIBERGLASS LADDER
Larry J. Ashton, Mapleton, and Ronald R. Grimes, Provo, both of Utah, assignors to Little Giant Industries, Inc., Provo, Utah
Filed Nov. 7, 1980, Ser. No. 204,745
Int. Cl.³ E06C *1/18, 1/32, 7/08*
U.S. Cl. 182—46 **5 Claims**

1. A method for making a ladder from composite materials having a first pair of side rails slidably mounted in telescopic relation within a second pair of side rails, the steps of the method comprising:

winding strands of resin-saturated fibers on a cylindrical drum such that the fibers are angularly oriented with respect to each other, thereby forming a sheet about the drum comprising at least one layer of resin-saturated fibers;

removing the sheet of resin-saturated fibers from the cylindrical drum;

cutting the sheet into long narrow strips such that the fibers are obliquely oriented with respect to a longitudinal axis of said strips;

placing the strips into molds corresponding to the side rails of said first and said second side rail pairs such that the longitudinal axis of each strip is parallel to a longitudinal axis of the respective mold; and

heating the resin-saturated fibers in the mold under pressure to a temperature sufficient to harden said fibers.

4,371,056
GUARDRAILING FOR VEHICLES
Rene Anglade, 48, Rue Anatole, 60110 Meru, Oise, France
Filed Feb. 10, 1981, Ser. No. 233,204
Int. Cl.³ E06C *5/06, 1/38*
U.S. Cl. 182—127 **5 Claims**

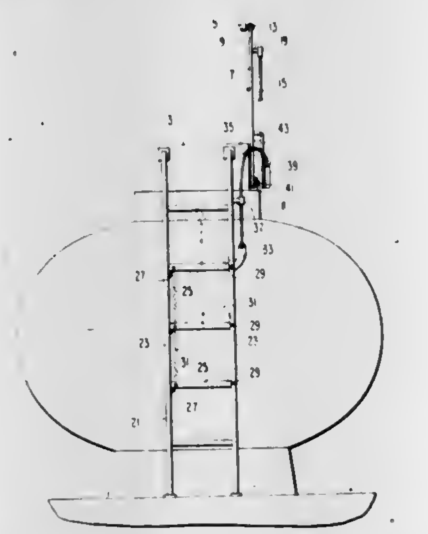

1. In a motor vehicle having a guardrailing extending lengthwise of the top of the vehicle, means to raise and lower the guardrailing, and a ladder to provide access to the top of the vehicle; the improvement in which the ladder has rungs that are mounted for movement between an operative position in which the ladder gives access to the top of the vehicle and in inoperative position in which the ladder provides no access to the top of the vehicle, and means interconnecting the guardrailing and the ladder rungs whereby when the guardrailing is lowered the rungs are moved to said inoperative position and when the guardrailing is raised the rungs are moved to said operative position.

4,371,057
TELESCOPIC SCAFFOLD
Daniel Blier, Riviere-du-Loup, Canada, assignor to 100426 Canada Ltee., Quebec, Canada
Filed Dec. 16, 1980, Ser. No. 217,186
Int. Cl.³ E04G *1/14, 1/18*
U.S. Cl. 182—184 **9 Claims**

1. A telescopic scaffold comprising opposed pairs of elongated support legs, each said legs being received in an adjustable sleeve member securable at a predetermined location therealong, arresting means to interlock said sleeve member with its associated leg at said predetermined location, an adjustable bracing end support structure adjustably securable between each said adjustable sleeve members of each pair of said legs to secure each leg of said pairs of legs vertically or at a desired inclined angle to each other and at a desired spacing therebetween, a tubular support member secured to each said adjustable sleeve members and extending transverse to the longitudinal axis of said adjustable sleeve member and said end bracing, an intermediate horizontal support member telescopically securable between opposed tubular members of said opposed support legs to constitute adjustable elongated side supports, a vertical flange secured along each sleeve of said pairs of sleeves, a plurality of spaced apart holes in each flange, said adjustable bracing end support structure comprising a top and bottom transverse adjustable support member secured in a spaced apart relationship across opposed legs of each pair of legs and secured at their respective ends to said flanges of said

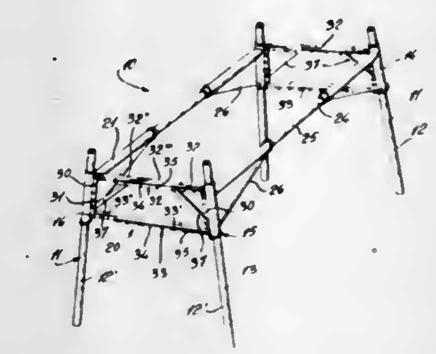

pair of sleeves, adjustably securable brace members secured adjacent an end thereof to a selected one of said holes in an associated one of said vertical flanges of one of said pairs of sleeves and extending angularly toward said top transverse support members and having its other end secured thereto to provide a rigid top transverse support, said adjustable transverse supports having their lengths adjustably secured whereby to vary said inclined angle of each said sleeves and said legs.

4,371,058
SPRING MOTOR
Joe W. Holley, 2938 S. Radford, Memphis, Tenn. 38114
Continuation-in-part of Ser. No. 68,154, Aug. 20, 1979, abandoned. This application Oct. 3, 1980, Ser. No. 193,663
Int. Cl.³ F03G *1/00*
U.S. Cl. 185—11 **8 Claims**

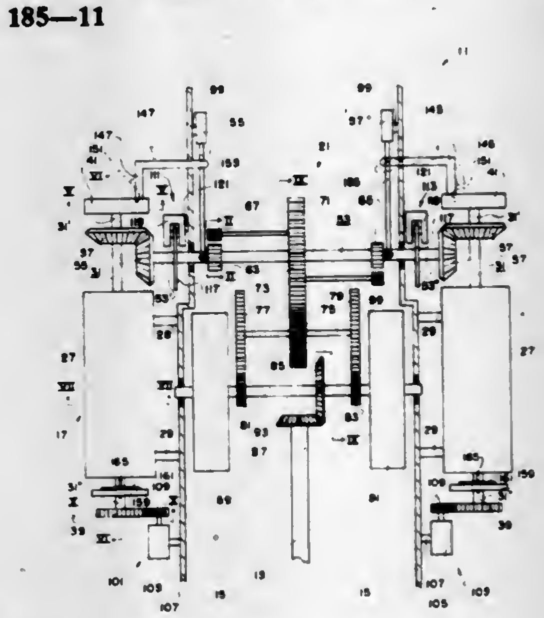

1. A spring motor for selectively rotating a drive shaft, said spring motor comprising:

(a) a casing means;

(b) first and second spring cylinder means, each of said first and second spring cylinder means including:

(i) body means for being fixedly attached to said casing means,

(ii) axle means for being rotatably attached to said body means, said axle means having a first end and a second end,

(iii) spiral power spring means having a first end for being attached to said axle means and having a second end for being attached to said body means, uncoiling of said

power spring means causing said axle means to rotate in a first direction, rotation of said axle means in a second direction causing said power spring means to coil,
(iv) a first gear member attached to said first end of said axle means, and
(v) a second gear member attached to said second end of said axle means;
(c) a transfer means for transfering rotation of said axle means of said first and second spring cylinder means to the drive shaft, said transfer means comprising:
(i) a main shaft member for being rotatably attached to said casing means and having first and second ends,
(ii) a first gear member attached to said first end of said main shaft member and for operatively engaging said first gear member of said first spring cylinder means to cause said main shaft member to rotate when said power spring means of said first spring cylinder means uncoils,
(iii) a second gear member attached to said second end of said main shaft member and for operatively engaging said first gear member of said second spring cylinder means to cause said main shaft member to rotate when said power spring means of said second spring cylinder means uncoils,
(iv) gear train means for causing the drive shaft to rotate when said main shaft member rotates,
and
(v) flywheel means for being rotated by said gear train means and for moderating any fluctuations in the speed of rotation of said main shaft member;
(d) a motor means for selectively rewinding said power spring means of said first and second spring cylinder means; and
(e) control means for causing said power spring means of said first and second spring cylinder means to uncoil in a sequential fashion one after the other, said control means including a first solenoid means for selectively preventing rotation of said axle means of said first spring cylinder means in said first direction; said control means including a second solenoid means for selectively preventing rotation of said axle means of said second spring cylinder means in said first direction; and said control means including control switch means electrically coupled to said first and second solenoid means for controlling said first and second solenoid means.

4,371,059
AUTOMATIC ADJUSTING DEVICE IN A DISC BRAKE
Masayuki Seki, Nagano, Japan, assignor to Nissin Kogyo Kabushiki Kaisha, Japan
Continuation of Ser. No. 8,860, Feb. 2, 1979, abandoned. This application Nov. 3, 1980, Ser. No. 203,462
Claims priority, application Japan, Feb. 6, 1978, 53-13566[U]; Feb. 7, 1978, 53-12612
Int. Cl.³ F16D *55/18*
U.S. Cl. 188—71.8 **1 Claim**

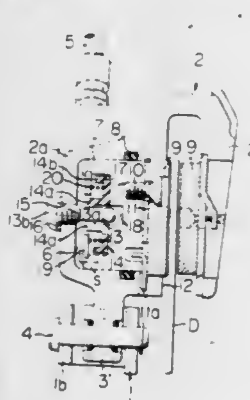

1. An improved automatic adjusting device in a disc brake of the type having a pair of friction pads, a brake caliper with a hydraulic cylinder, and a piston slidably mounted in said cylinder for urging said friction pads on the opposite sides of said brake disc for adjusting clearances between said brake pads and the brake disc at a constant level, wherein the improvement comprises:
adjusting means comprising a screw plug with a head portion detachably threaded in an air vent opening in an end wall of said cylinder, a fixed pin formed integrally with an inner end of said screw plug extending into hollow interior of said cylinder, a regulating plate disposed in a recess formed in said piston and having at its inner periphery a plurality of resilient chuck pawls mounted on said fixed pin for sliding frictional engagement and at its outer periphery a flange portion, an abutment plate fixedly secured to said piston and arranged in opposing relation with said flange portion of said regulating plate for limiting the axial displacement between said piston and said regulating plate to a given amount, and a return spring disposed between said abutment plate and said regulating plate for urging these plates in a direction apart from each other, the spring force of said return spring being larger than the force of friction engagement between said hydraulic cylinder and said piston but smaller than the force of frictional engagement between said fixed pin and said regulating plate whereby upon loosening of said screw plug, air in said cylinder can be vented through said vent opening and then said screw plug can be tightened to seal said cylinder.

4,371,060
PAD CLIP FOR DISC BRAKE
Yoichi Iwata, Saitama, Japan, assignor to Akebono Brake Industry Co., Ltd., Tokyo, Japan
Filed Feb. 13, 1981, Ser. No. 234,551
Int. Cl.³ F16D *65/02*
U.S. Cl. 188—73.38 **5 Claims**

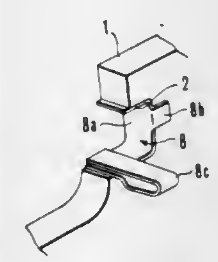

1. A pad clip for use with a disc brake and arranged to be interposed between a U-shaped guide groove in a support and a protruding part of a friction pad, said pad clip comprising a U-shaped clip body having a pair of oppositely spaced legs and a bottom part interconnecting said legs, said clip body arranged to be secured in the correspondingly U-shaped guide groove in the support, a spring part secured to the end of one of said legs of said clip body spaced from said bottom part and extending transversely of and outwardly from said leg, said spring part secured to the one of said legs arranged to be located radially inwardly with respect to the other of said legs relative to the axis of the disc brake, said spring part is a strip-like section with a first part extending outwardly from the one of said legs generally in the direction of the axis of the disc brake and away from the disc brake, and a second part reversely bent relative to said first part extending generally in the direction of the axis of the disc brake and toward the disc brake with said second part disposed in spaced juxtaposed relation to said first part.

4,371,061
BRAKE SHOES FOR RAILWAY DISC BRAKES
Gerald A. Ottewell, Solihull, England, assignor to Lucas Industries Limited, Birmingham, England
Filed Dec. 3, 1980, Ser. No. 212,369
Claims priority, application United Kingdom, Jan. 30, 1980, 8003102
Int. Cl.³ F16D *65/04*
U.S. Cl. 188—244 **7 Claims**

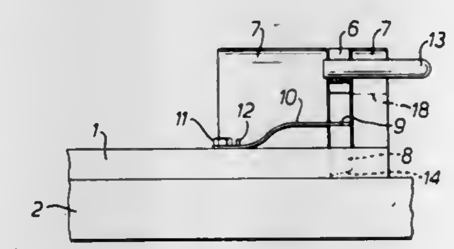

1. A brake shoe for a railway brake, the shoe comprising opposed front and rear faces, an elongate slot in said front face for mounting a brake pad on said shoe, the slot being open at one end and being slidably engagable through said open end thereof by a projection on said pad, an aperture in the shoe adjacent said open end of the slot, the aperture opening into said slot at the front face of the shoe, a retainer mounted slidingly in the aperture for engaging said brake pad to retain said pad on the shoe, the retainer being mounted on the shoe for movement between operative and retracted positions, and the retainer including a part which protrudes into said slot through the aperture in the said operative position of the retainer and which part is withdrawn through the aperture to be clear of the slot in the said retracted position of the retainer, and spring means acting at all times on said retainer in all positions thereof to bias the retainer in the direction from said retracted position towards said operative position, said spring means having one end fixed to the rear face of the shoe and an opposite end which is free and separate from said retainer and bears against a rearwardly facing surface on the retainer.

4,371,062
CLUTCH OPERATING DEVICE
Kiyokazu Ohkubo, Wako, Japan, assignor to Honda Giken Kogyo Kabushiki Kaisha, Tokyo, Japan
Filed Aug. 13, 1980, Ser. No. 177,802
Claims priority, application Japan, Aug. 18, 1979, 54-113633[U]
Int. Cl.³ B60K *41/22;* **F16D** *19/00*
U.S. Cl. 192—3.61 **10 Claims**

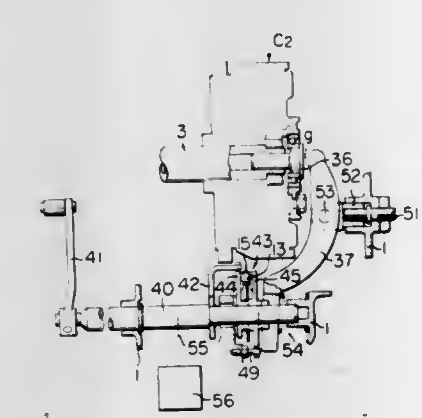

10. In a power transmission system in a two wheeled vehicle comprising: a crank casing; an engine crank shaft rotatably supported on said crank casing; a speed change input shaft rotatably supported on said crank casing in parallel relation to said crank shaft and being connected to a driven member through a speed change device; power transmission means for effecting power transmission between said crank shaft and said speed change input shaft; a clutch for controlling said power transmission means; clutch operating means for activating said clutch, said clutch operating means comprising an operating shaft, cam means disposed on said operating shaft, said cam means being movable axially as said operating shaft rotates reciprocatingly; a clutch release member for controlling setting and unsetting of said clutch; a clutch lever operatively connected between said cam means and said clutch release member for activating said clutch release member in response to axial forward movement of said cam means; and a return spring for biasing said cam means backward through said clutch lever, and means for interlocking said operating shaft and said speed change device whereby said clutch is placed in a cut-off state by reciprocating rotation of said operating shaft to cut off power transmission from said crank shaft to said speed change input shaft while activating simultaneously said speed change device.

4,371,063
PARK-LOCK MECHANISM
James O. Troemner; Peter D. Wetrich, both of Cedar Falls, and William A. Volz, Waterloo, all of Iowa, assignors to Deere & Company, Moline, Ill.
Filed Oct. 27, 1980, Ser. No. 200,862
Int. Cl.³ G05G *5/10*
U.S. Cl. 192—4 A **13 Claims**

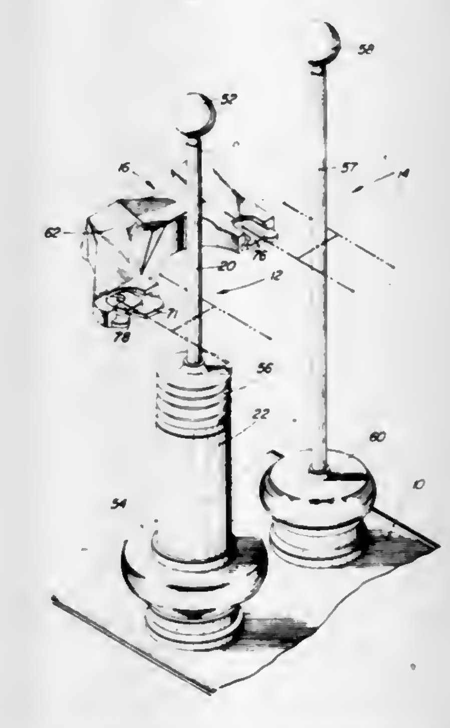

1. A park-lock mechanism for a transmission operatively controlled by a range selector shift lever and a gear speed shift lever, said range selector shift lever being movable between a plurality of range positions, including a park position and said gear speed shift lever being movable between a plurality of speed positions, including a low speed position, said park-lock mechanism comprising:
(a) means positioned on said range selector shift lever for dividing said range selector shift lever into an upper portion and a lower portion, said means enabling said upper portion to be angularly tilted irrespective of moving said lower portion; and
(b) interlocking means mounted adjacent to said two shift levers for locking said range selector shift lever in said park position after said gear speed shift lever has been placed in said low speed position thereby providing visual assurance that said transmission is in park.

4,371,064
DRIVE AND BRAKE DEVICE FOR A BICYCLE
Keizo Shimano, Sakai, Japan, assignor to Shimano Industrial Company Limited, Osaka, Japan
Filed Aug. 11, 1980, Ser. No. 176,807
Claims priority, application Japan, Aug. 28, 1979, 54-110141; Oct. 17, 1979, 54-134352; Mar. 31, 1980, 55-42701; May 15, 1980, 55-64714; May 15, 1980, 55-64715
Int. Cl.³ F16D *67/02*
U.S. Cl. 192—6 A 11 Claims

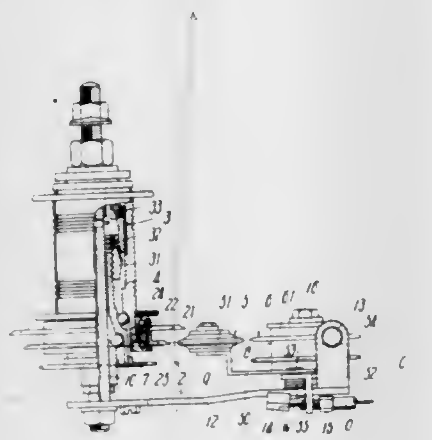

1. A drive and brake device for a bicycle which drives a bicycle rear wheel hub upon normal rotation of the bicycle pedals through a front gear and driving chain, and brakes the rear wheel hub upon a reverse rotation of the bicycle pedals, said device comprising:
- a rear wheel hub having a hub shaft, a hub shell supported rotatably to said hub shaft, a coaster brake mechanism housed within said hub shell and including a cylindrical brake actuator and brake shoes, said brake shoes being movable upon rotation of said brake actuator so as to brake rotation of said hub shell; a plurality of driving gears engageable with said chain; at least one transmitting means for transmitting driving force from said driving gears to said hub shell only during normal rotation of said bicycle pedals, and a braking driven member supported to said brake actuator and reversely rotatable upon reverse rotation of said pedals to cause rotation of said brake actuator;
- a fixing member;
- a derailleur mechanism for guiding said chain axially of said driving gears and switching said chain to one of said driving gears, said derailleur mechanism being supported to said fixing member and having a chain-switching pulley movable axially of said driving gears and a moving means for moving said pulley axially of said driving gears;
- a guide pulley supported rotatably to said fixing member for guiding said chain, said chain being stretched from said front gear to said chain-switching pulley and across said guide pulley;
- a braking driving member disposed coaxially with said guide pulley and operating upon a reverse rotation of said guide pulley which occurs when said pedals are reversely rotated;

and,
- a transmitting mechanism for transmitting operation of said braking driving member to said braking driven member causing rotation of said brake actuator and resultant actuation of said coaster brake mechanism.

4,371,065
BRAKE-TYPE SPRING COUPLING FOR ADJUSTMENT GEARS, PARTICULARLY IN SEAT ADJUSTERS
Bernd Engels; Friedrich Heise, and Heinz P. Cremer, all of Remscheid, Fed. Rep. of Germany, assignors to Keiper Automobiltechnik GmbH & Co. KG, Remscheid, Fed. Rep. of Germany
Filed Jan. 27, 1981, Ser. No. 229,008
Claims priority, application Fed. Rep. of Germany, Jan. 30, 1980, 3003204
Int. Cl.³ F16D *67/02*
U.S. Cl. 192—8 C 9 Claims

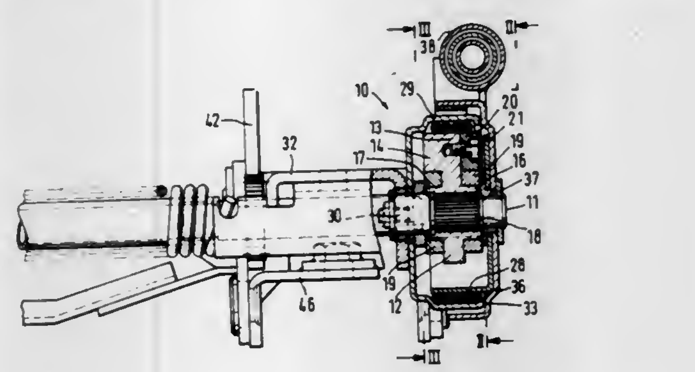

1. A brake-type spring coupling for adjustment gears, particularly for use in motor-vehicle seat adjusters, comprising an adjustment shaft supported for rotation about an axis; a stationary brake drum coaxially surrounding a portion of said shaft; a helical torsion spring coaxially arranged around said axis and being biased into a frictional contact with the cylindrical inner wall of said brake drum, said spring having inwardly bent end portions; a control means including a coupling segment arranged between said shaft and said spring and being supported for free rotation about said shaft; a transfer cam member rigidly secured to said shaft portion and defining at one lateral side thereof a radially directed abutment surface; a pair of follower segments supported for free rotation about said shaft and each being acted upon by an end surface of said coupling segment to be angularly displaced toward said transfer cam; said inwardly bent end portions of said spring being anchored in said follower segments to disengage said spring from said brake drum when said follower segments are rotated in a spring-tensioning direction; and means adjustably secured to the other lateral side of said transfer cam for adjusting the mutual angular position between said follower segments and the abutment surface on said transfer cam.

4,371,066
WET MULTIPLE DISC CLUTCH DEVICE FOR A VEHICLE TRANSMISSION
Kazuyoshi Fujioka, Tokyo, and Mitsuo Ikkatai, Ome, both of Japan, assignors to Nissan Motor Company, Limited, Yokohama, Japan
Filed Nov. 30, 1979, Ser. No. 98,885
Claims priority, application Japan, Dec. 29, 1978, 53-178873
Int. Cl.³ F16D *25/06*
U.S. Cl. 192—85 AA 2 Claims

1. A wet multiple disc clutch device for a vehicle transmission, having an input shaft and an output shaft, comprising:
- a clutch drum having a plurality of drive grooves formed on the inner surface thereof;
- a plurality of plane drive plates each having a plurality of projections which engage with said drive grooves;
- a plurality of plane driven plates connected to the output shaft of the vehicle transmission and interleaved with the plane drive plates to that the plane drive plates and the plane drive plates are alternately disposed to form a clutch;
- a piston actuated by hydraulic control pressure and adapted to press the plane drive and plane driven plates into contact with each other; and

- a conical plate disposed between an endmost one of said plane drive plates and said piston, said conical plate having at least one projection formed on the outer circumference thereof, said projection being engaged with said drive grooves on said clutch drum, said piston being

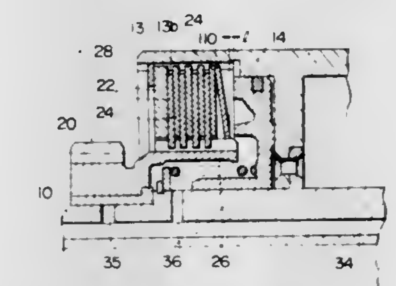

spaced axially from the inner portion of said conical plate when said clutch is disengaged and being arranged to contact said inner portion upon engagement of said clutch, thereby causing the outer portion of said conical plate to contact said endmost drive plate.

4,371,067
DRIVE ARRANGEMENT FOR A WASHING MACHINE
Otto F. Gerry, Gainesville, Fla., assignor to General Electric Company, Louisville, Ky.
Division of Ser. No. 183,607, Sep. 2, 1980, Pat. No. 4,317,343, which is a continuation-in-part of Ser. No. 87,900, Oct. 24, 1979, abandoned. This application Nov. 9, 1981, Ser. No. 319,500
Int. Cl.³ F16D *23/12*
U.S. Cl. 192—93 A 2 Claims

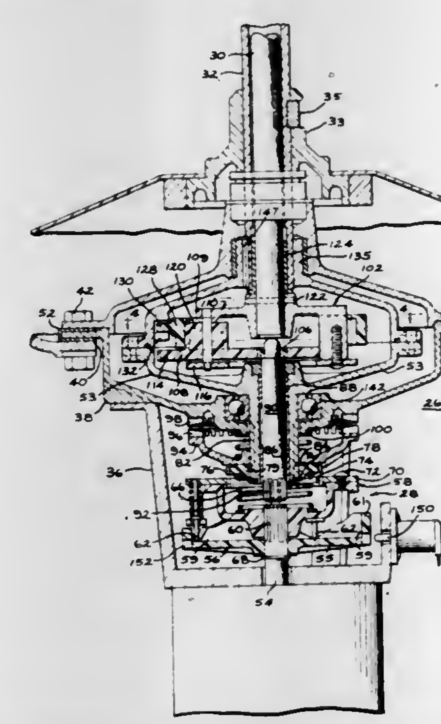

1. A power shifter for positioning a shifter element in respective axial positions on an output shaft, said shifter element mounted on said output shaft for axial sliding movement while being rotatably driven thereby, comprising:
- an idler cam element rotatably mounted on said output shaft disposed opposite said shifter element; selectively operable shifter brake means movable into engagement with said idler cam element mounted to rotatably restrain said idler cam element relative to said shifter element when operated; said shifter element formed with cam followers arranged in cooperating relationship with corresponding cam contours formed on said idler cam element, said cam contours comprising axially varying circumferential contours in mating engagement with said followers and wherein one of said contours comprises an axially extending lobe and a series of axial depressions, each corresponding to axially shifted positions of said idler can element with intermediate circumferentially extending ramping surfaces to thereby produce axial movement of said shifter element by angular displacement of said output shaft when said brake means restrains rotational movement of said idler cam element;
- retainer means retaining said idler cam element from moving axially away from said shifter element.

4,371,068
CLUTCH RELEASE BEARINGS
Rene Billet, Lamorlaye, France, assignor to VALEO Societe Anonyme, Paris, France
Filed Sep. 8, 1980, Ser. No. 184,629
Claims priority, application France, Sep. 10, 1979, 79 22532
Int. Cl.³ F16D *23/00*
U.S. Cl. 192—98 13 Claims

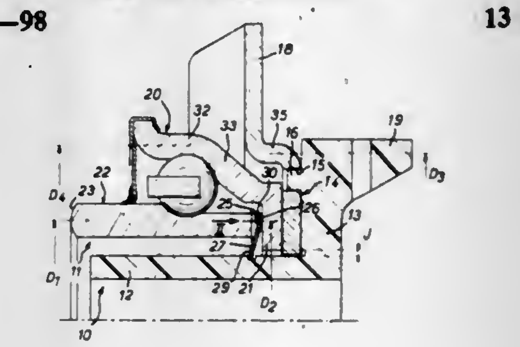

1. A clutch release bearing comprising an operating element having a transverse abutment member fixed axially thereto, said operating element having means cooperable with a clutch control member, a drive element comprising an anti-friction bearing including an inner race and an outer race, said inner race having a portion cooperable with clutch release means along a first circumference of said drive element, said outer race having a radially inwardly extending flange, axially acting resilient means bearing against said radially inwardly extending flange along a general line of contact forming a second circumference of said drive element and urging said drive element toward said transverse abutment member, said first and second circumferences being substantially in axial alignment with said second circumference lying within an extension of the thickness of said inner race.

4,371,069
SAFETY INTERLOCK
Peter J. Lovegrove, Lowestoft, England, assignor to Weatherford U.K. Limited, England
Filed Oct. 2, 1980, Ser. No. 193,123
Claims priority, application United Kingdom, Oct. 2, 1979, 7934201
Int. Cl.³ F16P *3/08*; B25B *17/00*
U.S. Cl. 192—135 9 Claims

1. A safety interlock between a machine guard and a machine actuator comprising:
(a) locking means for the guard being arranged, upon closing of the guard, to engage and thereby release an actuator locking means, and to be held in a guard locking condition by such engagement while the machine is actuated; and,
(b) actuator locking means including a holding member for the guard locking means, said holding member being mounted for movement buy the guard locking means between holding and releasing positions for such locking means, said holding member further being formed with a recess for receiving the guard locking means, the opening of said recess facing the direction of guard closing move-

ment of said locking means when in its releasing position, but facing transversely of said direction when in its hold-

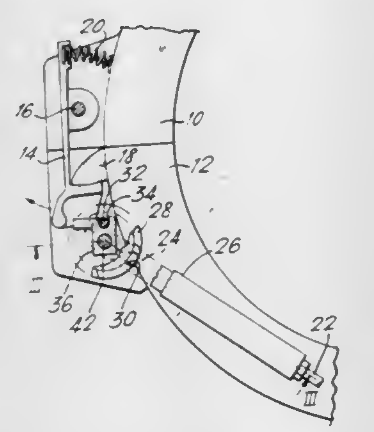

ing position so that a side wall of the recess blocks guard opening movement of the locking means.

4,371,070
KEY DEPOSIT RETURN MACHINE
Harry L. Maxwell, Rte. 5, Box 269-A, Cookeville, Tenn. 38501
Filed Jan. 26, 1981, Ser. No. 228,545
Int. Cl.^{3} G07F *7/02*
U.S. Cl. 194—4 D **9 Claims**

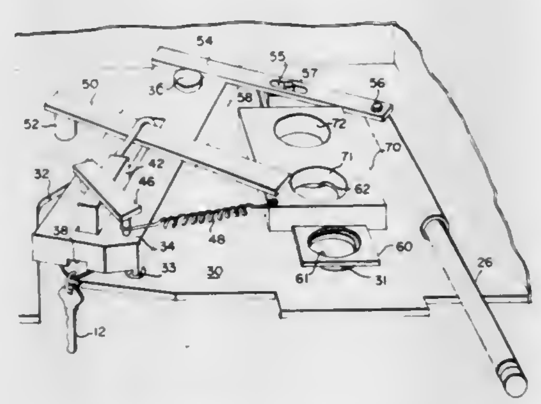

1. A key and tag assembly deposit return machine, comprising:
(a) a housing having a key and tag receiving opening, and a coin return opening,
(b) key and tag receiving means disposed within the housing and associated with the key receiving opening for receiving the key and tag within the opening and moving it into the housing,
(c) a coin return means disposed within the housing in communication with the coin return opening and associated with the key and tag receiving means for dispensing coins when a key and tag has been received by the key and tag receiving means.

4,371,071
TOKEN SENSING PHOTODETECTOR ACTUATED ELECTRONIC CONTROL AND TIMING DEVICE AND METHOD OF USE
Allan J. Abedor, and John L. Abedor, both of 865 Virginia Ave., East Lansing, Mich. 48823
Filed Apr. 24, 1981, Ser. No. 257,009
Int. Cl.^{3} G07F *7/00*
U.S. Cl. 194—4 R **22 Claims**

1. In an apparatus for controlling an electrical main line including an electrical circuit for controlling on-off switch means in the main line which is photoelectrically actuated by a colored translucent object with at least two sides through which light can pass the improvement which comprises:
(a) at least two spaced apart monochromatic light sources mounted in a housing so as to provide light from the sources through the object when positioned in the housing;
(b) at least two photoelectric detectors mounted in the housing so as to each receive light from only one of the light sources through the object such that a light source and a detector are coupled as a pair;
(c) positioning means within the housing for locating the object simultaneously between at least two of the light source and detector pairs;
(d) a voltage comparator circuit including at least four separate comparator subcircuits; at least two comparators responsive to a first photo detector/light source pair and at least two comparators responsive to a second photo

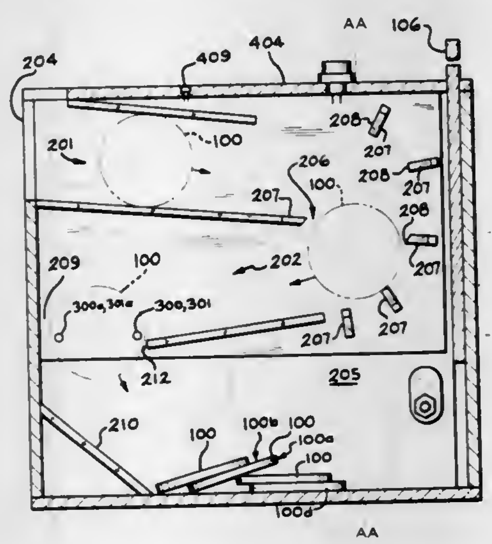

detector/light source pair, all comparator subcircuits connected to a gate means such that when the object is simultaneously positioned between at least two photo detector/light source pairs, the light attenuated and transmitted through the object will produce a voltage within a very narrow reference voltage range simultaneously within all comparator subcircuits, thereby simultaneously producing a desired output state from each comparator and thereby actuating the gate means connected to the on-off switch means to thereby control the on-off switch means; and
(e) electrical connection means to the main line, light source and detector pairs AND comparator circuit for providing electrical power.

4,371,072
COIN-OPERATED LATCH MECHANISM
Ronald Voegeli, 918 Gibbs Rd., Venice, Fla. 33595
Filed Dec. 22, 1980, Ser. No. 218,775
Int. Cl.^{3} G07F *5/06*
U.S. Cl. 194—54 **18 Claims**

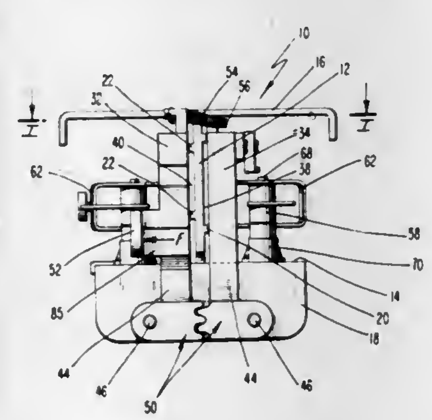

1. A coin receiving mechanism for use in a coin operated latch unit, comprising:
a unitary frame member having a central wall and two integral mounting plates perpendicular to said wall respectively disposed on two opposite ends of said central wall;
first and second channel members respectively disposed on opposite sides of said central wall and spaced therefrom to define first and second coin chutes, each of said channel members having a slot therein for providing access to said coin chutes;
a pawl support mechanism mounted on one of said mounting plates; and
at least one pawl mounted on said support mechanism on each side of said central wall, said pawls being mounted for pivotal movement about axes parallel to said central wall and each having a finger which normally projects into the slot in one of said channel members.

4,371,073
COIN CHECKER FOR COINS OF VARYING DIAMETER
Pierre Dubey, Zollikofen, Switzerland, assignor to Autelca AG, Switzerland
Filed Aug. 5, 1980, Ser. No. 175,579
Claims priority, application Switzerland, Aug. 8, 1979, 7300/79
Int. Cl.^{3} G07D *5/02*
U.S. Cl. 194—102 **13 Claims**

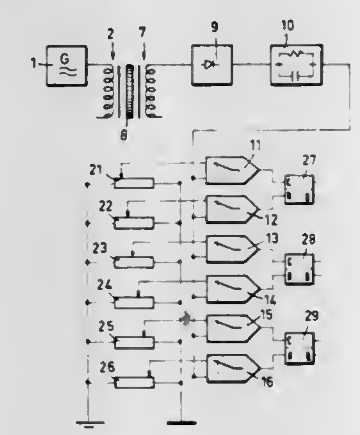

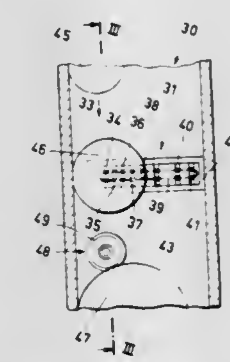

1. A coin checker for coins of varying diameters having a coin slot channel common to all coins, said channel having two narrow and two broad sides, a coil having a core, the coil field extending through said coin slot channel to be influenced by the coins (8; 45–47) passing through the channel on dependence on the diameter of the coins, and a circuit connected to evaluate the influence of the coins on the coil field and providing an output signal indicating that a coin of a predetermined diameter has travelled through said coil field, if the coin causes a variation in the coil field that lies within one of a plurality of predetermined ranges being representative for acceptable coins of different diameter, the improvement characterized in that said core consists of a plurality of shaped core parts (34–41, 54, 55) put in a row, each of said shaped core parts having at least two legs, said row of shaped core parts extending transversely to the coin travel direction from one narrow side to the other narrow side of said coin slot channel, the spacing of the mutually facing-away surfaces of the two outermost shaped core parts (34, 41; 54, 55) corresponding approximately to the diameter of the largest acceptable type of coin in said coin slot channel and the dimension of said shaped core parts in the coin travel direction (5; 33) being a fraction of the spacing of the mutually facing-away surfaces of the two outermost shaped core parts (34,41; 54,55).

4,371,074
TRANSPORT SYSTEM FOR AUTOMATIC POCKET IMPLANTATION APPARATUS
Joseph W. A. Off, Irving; Judson H. Early, Dallas; Daniel K. Roady, Dallas, and Theodore B. Thayer, Dallas, all of Tex., assignors to Haggar Company, Dallas, Tex.
Filed Jul. 21, 1980, Ser. No. 170,750
Int. Cl.^{3} B65G *47/74*
U.S. Cl. 198—339 **6 Claims**

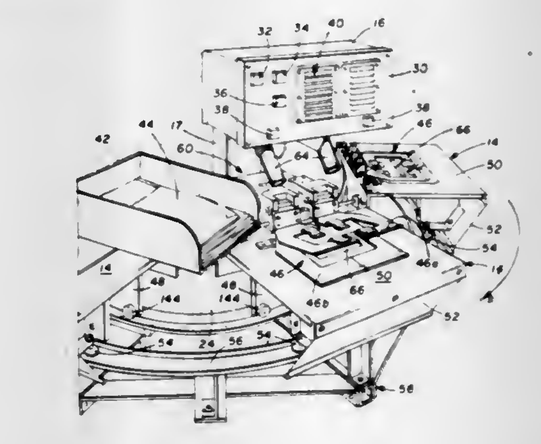

1. In a transfer machine of the type comprising a plurality of work stations situated around a predetermined course, an endless belt mounted for movement around the predetermined course and means for incrementally advancing the endless belt, the improvement comprising:
a plurality of carriers each secured to the endless belt for movement thereby around the predetermined course;
each of the carriers comprising:
a top plate;
a first template;
means supporting the first template on the top plate for pivotal movement about an axis extending parallel to the top plate between a closed position wherein the first template engages the top plate to clamp a first object therebetween and an open position wherein the first template extends at a substantial angle with respect to the top plate;
a second template overlying the first template;
means supporting the second template on the top plate between a closed position wherein the second template engages the first template to clamp a second object therebetween and an open position wherein the second template extends at a substantial angle with respect to the top plate; and
means mounted at one of the work stations on the predetermined course for first pivoting both of the templates to the open positions, for subsequently pivoting the first template only to the closed position to clamp the first object between the first template and the top plate, and for finally pivoting the second template to the closed position to clamp the second object between the second template and the first template.

4,371,075

MODULAR PRODUCTION LINE UNIT AND SYSTEM

Irving Erlichman, Wayland, Mass., assignor to Polaroid Corporation, Cambridge, Mass.

Filed Aug. 4, 1980, Ser. No. 175,249

Int. Cl.³ B65G *21/20*

U.S. Cl. 198—345 **10 Claims**

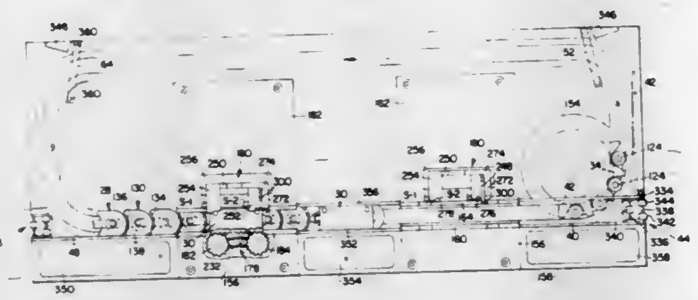

1. A work station forming part of a standardized modular unit for facilitating manual and/or mechanized work operations on a product supported on a carrier of the type including a base portion having an elongated gear rack thereon, the unit being of the type including a table having a horizontal work surface of given dimensions and an endless conveyor mounted on the table for substantially continuous movement along a horizontally extending closed loop path adjacent the work surface for sequentially transporting a plurality of the carriers to and away from said work station, said work station comprising:

means for defining a work station section on the table adjacent a selected portion of the conveyor path;

means at said work station section for defining a raised work position above the conveyor where a carrier received from the conveyor is supported for the performance of any one or more of a variety of manual and/or mechanized work operations;

means independent of the conveyor for engaging a carrier advanced into said work station section by the conveyor and for driving the engaged carrier linearly in the same direction and at substantially the same speed as the conveyor, said carrier engaging and driving means including at least one rotatably drivable gear for engaging the rack on the carrier and imparting such linear motion to the carrier in response to rotation of said gear; and

means responsive to a first advancement of the engaged carrier by said carrier engaging and driving means for lifting the engaged carrier off of the conveyor and locating it at said raised work position for performance of work operations and thereafter responsive to a second advancement by said carrier engaging and driving means for lowering the engaged carrier back onto the conveyor for transport away from said work station section.

4,371,076

APPARATUS FOR CONVEYING AND CLOSELY GATHERING FOOD

Yasutaka Nakao, No. 207 Mutsuzane Goko, Matsudo-shi, Chiba-ken, Japan

Continuation-in-part of Ser. No. 91,039, Nov. 5, 1979, which is a continuation of Ser. No. 925,166, Jul. 17, 1978, abandoned, which is a continuation of Ser. No. 849,622, Nov. 8, 1977, abandoned, which is a continuation of Ser. No. 774,965, Mar. 7, 1977, abandoned, which is a continuation of Ser. No. 701,979, Jul. 1, 1976, abandoned, which is a continuation of Ser. No. 548,922, Feb. 11, 1975, abandoned. This application Oct. 16, 1980, Ser. No. 197,693

Claims priority, application Japan, Mar. 6, 1974, 49-25686[U]

Int. Cl.³ B65B *42/26, 57/03*

U.S. Cl. 198—420 **6 Claims**

1. Apparatus for conveying and gathering articles comprising

a first grouping device including a feeding conveyor, a detector, a grouping conveyor, and a pusher; a second grouping device including a feeding conveyor, a detector, a grouping conveyor, a pusher and a shuttle plate arranged substantially parallel to each other; a cross conveyor; a limit switch and a transmitter for providing instructions to transfer or convey from said shuttle plate or

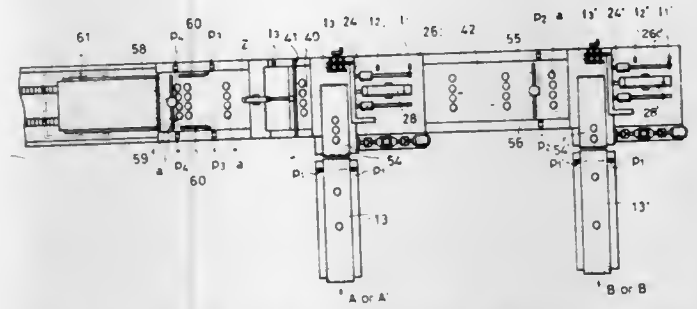

other waiting devices to said cross conveyor by means of cams driven by a driving device of said cross conveyor, said second grouping device being disposed in the neighborhood of an outlet end of said cross conveyor arranged to cross said grouping conveyors.

4,371,077

JEWELRY DISPLAY DEVICE

Samuel G. Solitt, 2121 Brookshire Rd., and Jerry Shaw, 50 W. Fairlawn Rd., both of Akron, Ohio 44313

Filed Apr. 24, 1981, Ser. No. 256,986

Int. Cl.³ B65D *81/36;* A47F *7/03;* A47G *1/16;* B65D *73/00*

U.S. Cl. 206—45.14 **17 Claims**

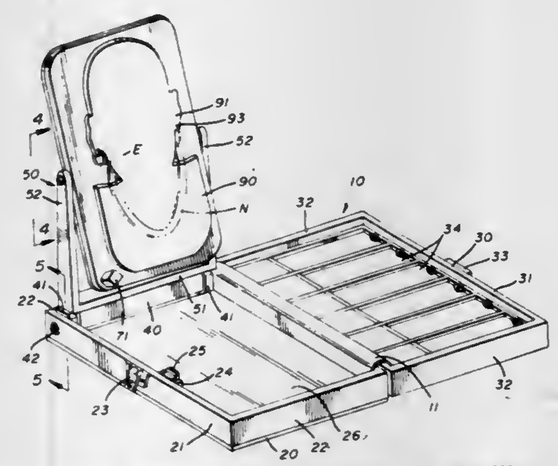

8. A jewelry display assembly for jewelry or the like, comprising:

(A) a base;

(B) a cover hinged to said base;

(C) a display unit

(a) attached to said base and

(b) being movable into and out of said base about an axis normal to the hinge axis between said cover and said base; and

(D) said display unit including an outline shape simulating at least the head of a human being for displaying the jewelry.

4,371,078

PALLET, PROCESS AND APPARATUS FOR PRODUCING CRYSTAL RESONATORS

Roger W. Hunt, Greensboro, N.C.; Brian T. Miller, Leland, and Donald R. Schroeder, Sandwich, both of Ill., assignors to CTS Corporation, Elkhart, Ind.

Filed Aug. 14, 1980, Ser. No. 177,983

Int. Cl.³ B65D *73/02*

U.S. Cl. 206—329 **7 Claims**

1. A pallet for receiving the components of electrical devices in the assembly of such devices, comprising an electrically nonconductive, heat stabilized pallet having a plurality of spaced-apart bosses each having openings adapted to receive

the terminals of a base member, a longitudinal laterally formed groove through which said terminals are received and proportioned to receive test means contactable with said terminals for the testing of said components, a plurality of regularly spaced cog means for moving the pallet in a longitudinal direction for

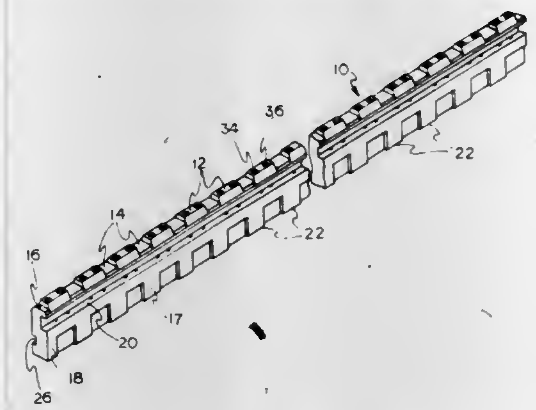

successive assembly and testing of said components mounted on the bosses of said pallet, and a longitudinal guide means extending along one face of said pallet and linearly formed therein to provide guidance and location of said components during the assembly and testing thereof.

4,371,079

CONTAINER FOR CHAIN SAWS

Andrew E. Dembicks, Raleigh, N.C., assignor to Southern Case, Inc., Raleigh, N.C.

Filed Jun. 25, 1981, Ser. No. 277,237

Int. Cl.³ B25H *3/02;* B65D *6/00*

U.S. Cl. 206—349 **9 Claims**

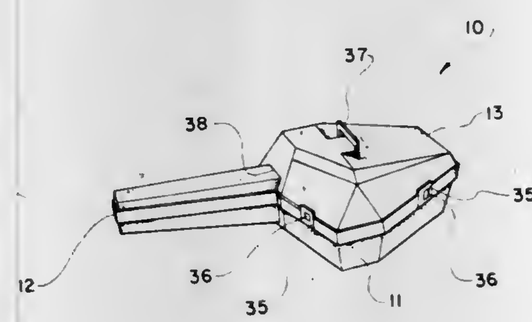

1. A container comprising a base portion including at least one wall, a generally U-shaped opening in said wall bordered by side areas and a bottom area; a recess in at least one of said side areas; a scabbard portion having side walls and a bottom; and a projection outwardly disposed from at least one of said scabbard sides, said projection being so sized as to matingly engage said recess in said side area whereby said scabbard portion can be assembled into said base portion in a relatively rigid relationship.

4,371,080

CHILDPROOF PACKAGE FOR MULTIPLE PRODUCTS

Russell R. Haines, Brielle, N.J., assignor to Paco Packaging Incorporated, Lakewood, N.J.

Filed Feb. 20, 1981, Ser. No. 236,420

Int. Cl.³ B65D *83/04, 85/42*

U.S. Cl. 206—531 **9 Claims**

1. A childproof package for plural products comprising a receptacle having an open side, said receptacle containing two products in remote spaced relation, said receptacle having an outwardly extending flange adjacent the open side, a tough closure layer sealed to said flange and closing said open side of said receptacle, said closure layer and receptacle being free from any slit or weakened portion provided to facilitate access to said products, means on the receptacle for moving one of the products therein toward the other product until they are sufficiently juxtaposed whereby the products cooperate to apply a combined force sufficient to rupture said closure layer

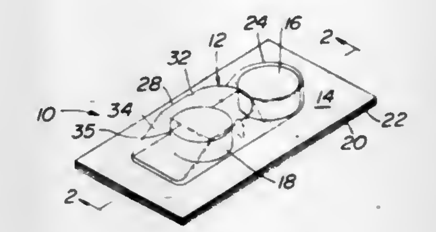

as the package is bent about an imaginary transverse line located between the juxtaposed ends of the products.

4,371,081

PHOTOELECTRIC SORTING DEVICE FOR COLOR SORTING APPARATUS

Toshihiko Satake, Higashi-Hiroshima, Japan, assignor to Satake Engineering Co., Ltd., Tokyo, Japan

Filed Jul. 6, 1981, Ser. No. 281,230

Claims priority, application Japan, Jul. 7, 1980, 55-93023

Int. Cl.³ B07C *5/342*

U.S. Cl. 209—580 **2 Claims**

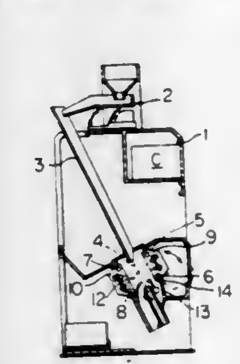

1. In a color sorting apparatus having a grain chute, a grain supplying device disposed at the upper end of said chute and adapted to supply grains of different colors to the upper end of said chute, and a grain sorting chamber disposed at the lower side of said grain chute, said grain sorting chamber accommodating a photoelectric sorting device including a pair of photoelectric chambers each incorporating a photoelectric detector, said photoelectric chambers being disposed so as to oppose to each other across the flow flux of said grains coming down from said chute and shielded by means of transparent window plates, said photoelectric sorting device further including an injection nozzle device adapted to blow air to blow away and separate the grains of different color in accordance with the detection signal from said photoelectric detectors,

an improvement in said photoelectric sorting device which comprises that at least one of said photoelectric chamber is rotatably mounted on the frame of said grain sorting chamber.

4,371,082

BICYCLE RACK

Richard J. Hostert, Cascade; Michael J. Mathiasmeier, Burlington, and Robert J. Gilbert, Sioux City, all of Iowa, assignors to Iowa State University Research Foundation, Inc., Ames, Iowa

Filed Nov. 3, 1980, Ser. No. 203,532

Int. Cl.³ A47F *7/04*

U.S. Cl. 211—22 **5 Claims**

1. A bicycle rack comprising a base,

at least one support post attached to said base,

at least one approximately horizontally disposed fork bracket attached to each support post,

a horizontally disposed cross-bar attached to each support post,

two fork brackets being oppositely disposed and attached to each cross-bar,
said base including a center beam to which each support post is attached and which is in the same vertical plane as said cross-bar,
said fork bracket including two parallel disposed U-shaped members, each comprising a closed end, a first leg and a

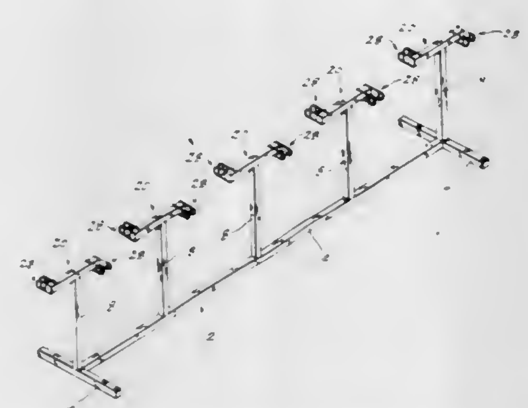

second leg wherein said first and second legs are in the same vertical plane, whereby said first leg is the upper leg and said second leg is the lower leg, and wherein each of said U-shaped members is attached by each of said upper and lower legs to said cross-bar,
said U-shaped members including a vertically disposed reinforcing bar attached to said upper and lower leg at a point between said closed end and said cross-bar.

4,371,083
UNIVERSAL RACK FOR HOUSING TELECOMMUNICATION EQUIPMENT
Carlo Zingrini, Milan, and Maurizio Oreglio, Bellinzago Lombardo, both of Italy, assignors to Telettra-telefonia Elettronica e Radio S.p.A., Milan, Italy
Filed Jun. 10, 1980, Ser. No. 158,292
Claims priority, application Italy, Jun. 12, 1979, 23474 A/79
Int. Cl.³ A47F *7/00*
U.S. Cl. 211—26 **6 Claims**

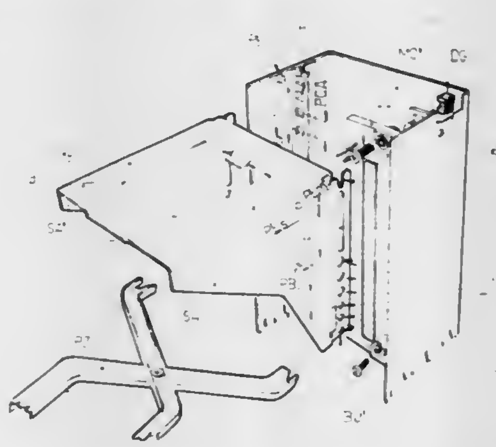

1. In a universal rack for housing a wide range of subrack modules containing telecommunication equipment, power supplies and exchange cables, said rack comprising a vertical upright including connectors affixed thereto and at least two brackets, each bracket having a horizontal suspension base for the subrack modules and opposing side ribs each provided with notches for engagement with corresponding pins of the upright, the improvement comprising:
(a) said upright being U-shaped and including a base and two opposing sides extending normal thereto, with the free end of each side including a series of inwardly protruding pins regularly spaced a distance DI apart;
(b) each said bracket rib including, at the end engagable with said corresponding side free end, a vertical strip including an array of N holes in a lower portion thereof, and a slit thereabove, the diameter of said holes and said slit slightly exceeding the diameter of said pins and the number of holes N and the distance PBU between each of said holes being such that

$$DI=PBU(N+1)$$

while the distance H between topmost and the bottommost positions in the slit is

$$H=DI(1-2/N+1);$$

whereby each bracket can assume, over the distance DI, NP positions where NP=DI/N, and the number NM of subrack modules mountable between consecutive brackets are all those resulting from the combinations of the DI/N positions of each bracket on opposing side arms with respect to the successive ones.

4,371,084
HAIR STYLING ACCOUTREMENTS
David Weinrauch, 1106 Harbormaster Shipyard, Hilton Head Island, S.C. 29928
Filed Jun. 9, 1980, Ser. No. 157,842
Int. Cl.³ A47F *1/12, 1/14*
U.S. Cl. 211—126 **4 Claims**

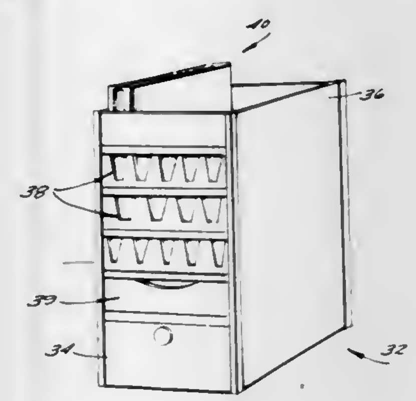

1. A device for dispensing rods each having a neck and head, in combination with a tray; said device comprising
a base; a pair of substantially parallel sidewalls substantially perpendicular to said base; a pair of lips integral with said sidewalls and extending substantially perpendicularly therefrom toward each other to define a channel therebetween, said channel having a width slightly greater than the diameter of a rod neck, and slightly smaller than the diameter of a rod head; said sidewalls extending a distance from the top of said base to the bottom of said lips at least as great as the length of a rod neck; said sidewalls, lips, and base defining an open front end so that a plurality of rods may be slid into and out of said device with each rod having a head engaging the tops of said lips adjacent said channel, and the rod necks extending into said device; a rear end wall opposite said open end covering substantially the entire area between said base, sidewalls, and lips; an extension of each of said lips adjacent said rear end wall an integral end termination of said channel adjacent said rear end wall; and a front end wall portion integral with said base and sidewalls and extending upwardly from said base a portion of height of said sidewalls to partially close said device open front end but having a top surface spaced from the bottom of said lips a distance at least as great as the length of a rod neck; and said tray having a bottom surface and a plurality of sidewalls, each sidewall of said tray having substantially the same height as the height of said front end wall portion, and said tray being dimensioned to snugly receive a plurality of said bases.

4,371,085
DISPLAY RACK
Howard J. Fredrickson, Cannon Falls, Minn., assignor to Cornelius Cannon, Inc., Cannon Falls, Minn.
Filed Jul. 22, 1980, Ser. No. 171,132
Int. Cl.³ A47F *5/13*
U.S. Cl. 211—149 **11 Claims**

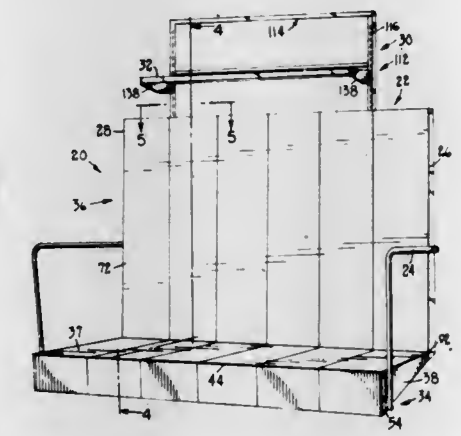

1. A display rack for standing on a floor and holding a quantity of consumer products, comprising:
bottom support means for providing bottom support for the quantity of said products, said bottom support means including a bottom support panel having a plurality of bends, said bottom support panel including an upper side for supporting said products, two sidewalls extending downwardly from the upper side and flanges extending inwardly from the sidewalls, said bottom support means further including a plurality of structural members extending between the upper side and the flanges for supporting the upper side, said flanges contactable with the floor for supporting said bottom support means on said floor;
back support means for providing back support for the quantity of said products, said back support means including a back support panel having a plurality of bends, said back support panel including a forward side for supporting said products, two upright sides and a top side extending rearwardly from the forward side, said back support means further including an angle member extending between said upright sides, said top side and said angle member for holding said upright sides approximately parallel, said angle member also for supporting said back support means on said floor; and
means for attaching said bottom support means to said back support means including means for folding said back support means with respect to said bottom support means, whereby said folding means allows said bottom and back support means to be assembled and folded for convenient packaging and shipping.

4,371,086
SUPPORT STRUCTURES OF EXCAVATING MACHINES
Edwin W. Sankey, Marion, Ohio, and David J. Whittingham, Dallas, Tex., assignors to Dresser Industries, Inc., Dallas, Tex.
Filed Jun. 27, 1980, Ser. No. 163,635
Int. Cl.³ B66C *23/84*
U.S. Cl. 212—253 **20 Claims**

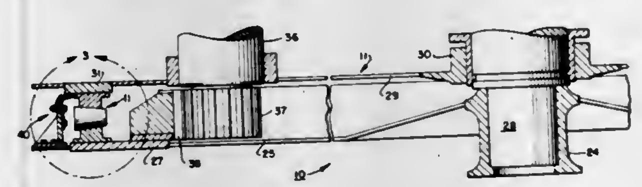

1. In an excavating machine having a lower frame, an upper frame and means for rotatably supporting said upper frame on said lower frame, an assembly for improving the loading condition of the upper frame supporting means comprising a first annular seal mounted on one of said upper and lower frames and disposed in wiping, sealing contact with the other of said upper and lower frames, a second annular seal mounted on one of said upper and lower frame and disposed in wiping, sealing contact with the other of said upper and lower frames, forming a sealed, annular chamber between said upper and lower frames, and means for supplying air under pressure to said annular chamber to provide an upwardly directed force on said upper frame alleviating the load imposed on said upper frame supporting means.

4,371,087
PACKAGE FOR PERFUME PRODUCTS
Claude Saujet, Saint-Maurice, France, assignor to Cartier International B.V., Amsterdam, Netherlands
Filed Dec. 29, 1980, Ser. No. 221,363
Claims priority, application France, Jan. 2, 1980, 80 00001
Int. Cl.³ B65D *23/00, 23/08*
U.S. Cl. 215—12 R **12 Claims**

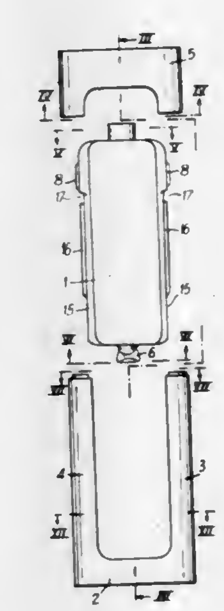

1. A package for liquids, particularly for perfumery products, comprising:
a case having a lower base portion and two lateral parts upwardly extending from said lower portion;
a refill container;
bayonet-type locking means for locking said container in the base of said case, said locking means comprising
a projection extending from the bottom of said container, and
an opening of a corresponding shape in said base portion for accommodating said projection; and
means on said container and on the lateral parts of said case for:
(a) angularly positioning and vertically guiding the container during the introduction thereof into said case in a first angular orientation, in which said projection at the bottom of the container is in registration with and may be introduced into the opening of said base portion, and
(b) elastically holding the container against axial and rotational displacement in said case in a second angular orientation in which said projection at the bottom of said container is locked in the opening of said base portion.

4,371,088
TAMPER INDICATING CHILD RESISTANT CLOSURE
Peter P. Gach, Evansville, Ind., assignor to Sunbeam Plastics Corporation, Evansville, Ind.
Filed Sep. 10, 1981, Ser. No. 300,792
Int. Cl.³ B65D *55/02*
U.S. Cl. 215—220 **10 Claims**

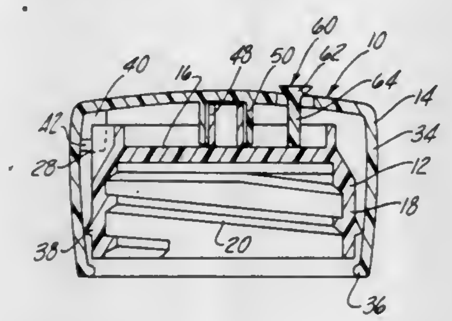

1. A tamper indicating child resistant closure for containers comprising: relatively rotatable inner and outer caps, said inner cap being internally threaded for engagement with threads on a container, a first set of engaging surfaces on said caps engageable with each other to turn said inner cap in a closing direction upon rotation of said outer cap in one direction, a second set of engaging surfaces on said caps operable to turn said inner cap in an opening direction upon simultaneous engagement of said surfaces and rotation of said outer cap in an opposite direction, said second set of engaging surfaces being engageable with each other only upon axial deflection of a part of said outer cap relative to said inner cap, an indicator element on said outer cap and connected thereto by frangible webs, said indicator element having a projecting portion in proximity to said inner cap when said part of said outer cap is not deflected and being engageable with said inner cap upon axial deflection of said part of said outer cap to break said frangible webs to separate said indicator element from said outer cap.

4,371,089
CONTAINER CLOSURE
Willem Barendregt, Baarn, Netherlands, assignor to Internationale Verpakking Maatschappij BV, Weesp, Netherlands
Filed Sep. 4, 1981, Ser. No. 299,387
Claims priority, application Netherlands, Sep. 8, 1980, 8005062
Int. Cl.³ B65D *55/02*
U.S. Cl. 215—256 **5 Claims**

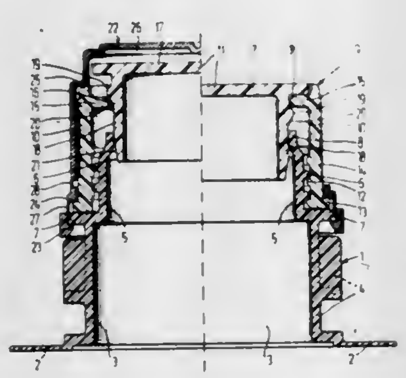

1. A closure for a container for packing fluids, said closure being provided with a neck having exteriorly positioned closure means and with a cap consisting of a cover portion and skirt portion with interiorly disposed closure means adapted for coaction with the neck closure means, while the cover portion is connectible with a single snap closure to the skirt portion, characterized in that the cap, in case of not yet connected skirt and cover portion, is entirely surrounded by a protective cap which prevents undesirable connection of skirt portion to cover portion, as well as receives the cap sealingly relatively to the surroundings.

4,371,090
SECONDARY SEAL FOR FLOATING ROOF STORAGE TANK
Bernard C. Ogarek, Park Ridge, and Milton W. Heisterberg, Flossmoor, both of Ill., assignors to GATX Tank Erection Corporation, Chicago, Ill.
Filed Nov. 3, 1980, Ser. No. 203,795
Int. Cl.³ B65D *88/46*
U.S. Cl. 220—224 **7 Claims**

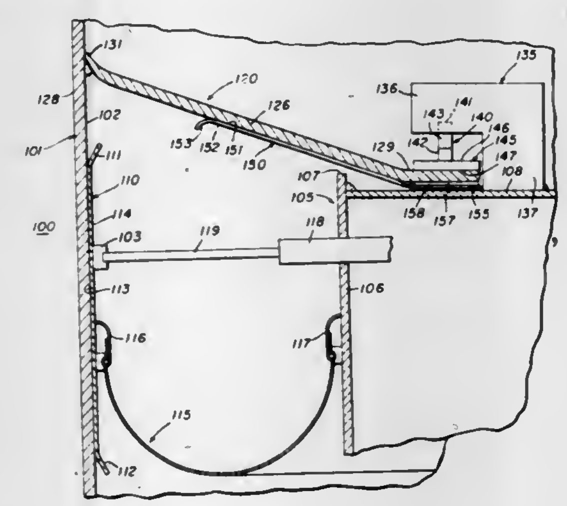

1. A floating roof storage tank comprising an upstanding cylindrical tank shell for containing a quantity of liquid to be stored, a floating roof within said tank shell adapted to float on the surface of the liquid within said tank shell, first sealing means extending between said floating roof and said tank shell and closing the space therebetween to provide a primary seal therebetween, a second sealing member secured to said floating roof and extending therebeyond and lying in sealing engagement with the inner surface of said tank shell to form a secondary seal between said floating roof and said tank shell, clamp means on said floating roof circumferentially spaced thereabout for securing said second sealing member to said floating roof, said clamp means including removable wedges for wedging said second sealing member toward said floating roof, a sealant between said floating roof and said second sealing member providing a gas tight seal therebetween, and a plurality of fusible members in said second sealing member circumferentially spaced thereabout.

4,371,091
DOUBLE-SEAL MOLDED PLASTIC SCREW CAP
Robert P. Gelina, Vernon, Conn., assignor to Apollo Molded Products, Rockville, Conn.
Filed Jan. 21, 1981, Ser. No. 226,956
Int. Cl.³ B65D *41/04*
U.S. Cl. 220—288 **3 Claims**

1. A double-seal molded plastic screw cap for use with a threaded-neck container of the type intended to hold a solid cosmetic product having a volatile ingredient, said screw cap comprising, in combination:

(a) a resilient cup-shaped plastic cap body having an annular side wall integral with a transverse top wall, said side wall having internal screw threads adapted for engagement with the external screw threads of the container neck,

(b) said side wall of the cap body having an annular sealing surface disposed above the internal screw threads and between the latter and the top wall, said sealing surface being slidingly and telescopically engageable with the outer annular surface of the container neck at the top rim thereof, to provide a first seal therewith,

(c) said annular side wall of the cap body having a perfectly flat downwardly-directed annular sealing surface on its bottom

edge for abutting engagement with a cooperable shoulder of the container neck to provide a second seal therewith,

(d) said annular sealing surfaces of the cap being spaced apart a distance equal to the spacing of the outer annular surface and cooperable shoulder of said container, thereby to effect simultaneous seals therewith,

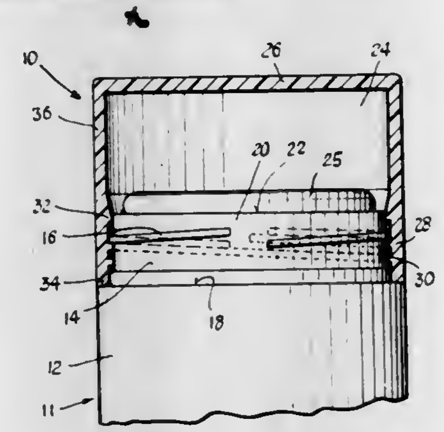

(e) the annular side wall of the cap extending upward to said top wall past the annular sealing surface therein, so as to provide a clearance chamber in which a portion of said cosmetic product can extend and be disposed.

4,371,092
WASTE CONTAINER WITH PERMANENT LID HOLD-DOWN ASSEMBLIES
Lyndon M. Teague, 1519 Chestnut St., Wilmington, N.C. 28401
Filed Oct. 29, 1981, Ser. No. 316,227
Int. Cl.³ B65D *45/16*
U.S. Cl. 220—324 **7 Claims**

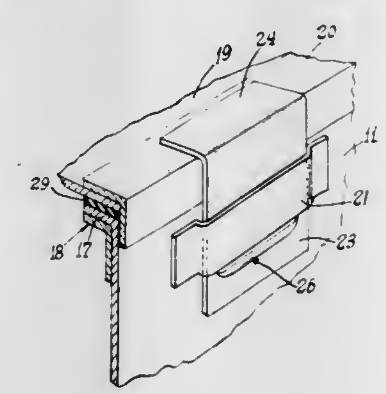

1. A waste disposal container comprising

(a) a metallic rectangularly spaced body having a bottom wall and side and end walls,

(b) means for reinforcing the exposed edges of said side and end walls,

(c) a metallic lid for said body,

(d) means reinforcing the peripheral edge of said lid,

(e) hold-down assemblies for the lid of the container including retaining members carried on the outer wall surface of said side and end walls,

(f) locking members each having a portion engaging said reinforced edge of said lid and another portion in contact with said retaining means and being held thereby in facial abutment with confronting surfaces of said walls so as to secure said lid in a closing relationship on said body,

(g) and means on said locking member cooperating with said retaining member for permanently securing said locking member in contact with said lid in said container for permanently securing said lid onto the container.

4,371,093
VENDING MACHINE WITH CONVERTIBLE SHELVES
Martin M. Berger, 7711 Sycamore Ave., Elkins Park, Pa. 19117
Filed Apr. 14, 1981, Ser. No. 254,227
Int. Cl.³ B65H *31/20*
U.S. Cl. 221—90 **8 Claims**

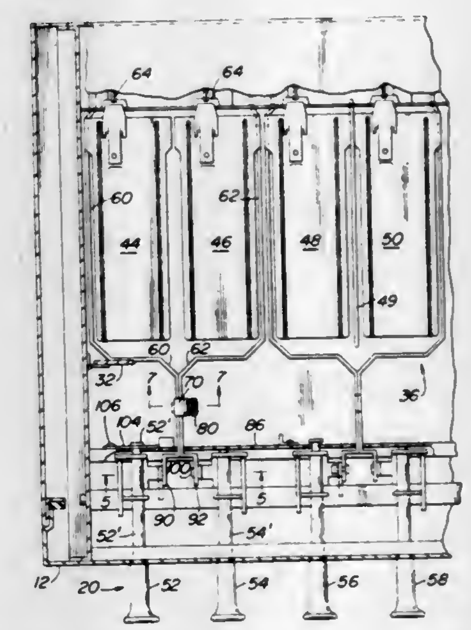

1. A vending machine comprising a housing containing horizontal pivotable shelves disposed side-by-side and adapted to support articles to be dispensed, a discrete dispensing operator coupled to each shelf for pivoting each shelf to attain a dispensing action, means for converting two adjacent shelves so that they function as a single shelf and for disabling one of the operators associated with said two adjacent shelves whereby the other operator can simultaneously effect dispensing from each of said two adjacent shelves.

4,371,094
BARRIER TWO PART PAIRING AND DISPENSING CARTRIDGE
Charles G. Hutter, III, Carson City, Nev., assignor to Products Research & Chemical Corporation, Glendale, Calif.
Filed Jul. 31, 1980, Ser. No. 174,117
Int. Cl.³ F04B *9/14*
U.S. Cl. 222—1 **7 Claims**

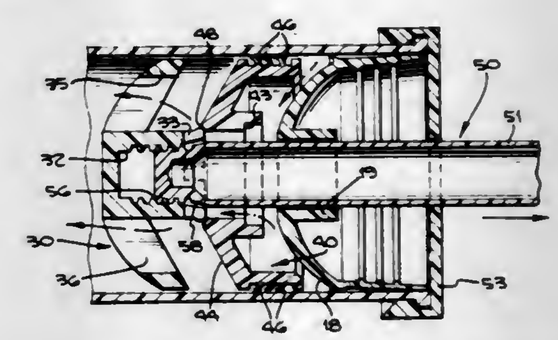

1. A dual compartment container for separately storing two materials, subsequently mixing them, and later dispensing the mixture comprising:

a cylindrical body having a sealable orifice at each end thereof;

a barrier assembly disposed within the cylindrical body between the two ends for creating two separated compartments in the cylindrical body and capable of separating two materials, said barrier assembly having a sealing member having slidable, sealing contact with the inner wall of the cylindrical body and a dasher movable axially back and forth toward each of the ends to mix the material to be contained in the cylindrical body, the sealing member and the dasher being normally adjacent each other during the separate storing of the materials and during dispensing of the mixture; and wherein the improvement comprises:

said sealing member having means for releasably engaging and disengaging the dasher, said means comprising a central sleeve orifice and a circumferential locking shoulder;

said dasher having a means for releasably engaging and disengaging the sealing member, said means comprising a central core adapted for axial sliding engagement with the central sleeve orifice, and resilient locking members adapted to releasably engage the circumferential locking shoulder; and

a means for moving the dasher comprising a rod attached to the dasher, said attachment allowing the rod to be positioned relative to the dasher in a first position which lockingly engages the dasher to the sealing member and in a second position which permits the dasher to be disengaged from the sealing member.

4,371,095
ONE-PIECE CHILD RESISTANT CLOSURE
Gary V. Montgomery, and Daniel P. McAlinden, both of Evansville, Ind., assignors to Sunbeam Plastics Corporation, Evansville, Ind.
Filed Nov. 2, 1981, Ser. No. 317,456
Int. Cl.³ B65D *47/08*
U.S. Cl. 222—153 **11 Claims**

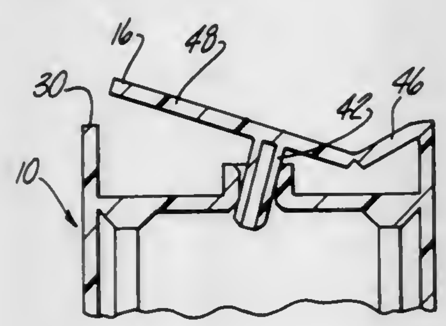

1. A one piece child resistant closure for containers comprising: a cap member adapted to be permanently attached to a container and having a recess in its upper end, a cover member closing said recess in said cap member and formed integrally therewith for hinging movement about a first hinge at one edge, a dispensing orifice formed in said recess of said cap member and communicating with said container, plug means for said dispensing orifice moveable from a position in which said orifice is closed to a position in which said orifice is opened upon swinging of said cover member about said first hinge to a fully opened position, a second hinge between said plug and said first hinge dividing said cover member into relatively foldable first and second portions, means forming a fulcrum for said second portion on a selected one of said member spaced from second hinge and adjacent said plug means, said second portion of said cover member being tiltable about said fulcrum while said plug means remain in a position closing said orifice during application of a pressing force to said cover member adjacent said second hinge to elevate an edge of said second portion from said recess to a lifting position, said lifting position permitting gripping of said second portion for swinging of said cover member about said first hinge to move said plug means and open said orifice.

4,371,096
CONTROL APPARATUS FOR PRESSURIZED GAS/LIQUID SYSTEMS
Charles H. Scholl, Vermilion, and Paul S. Frates, Brunswick, both of Ohio, assignors to Nordson Corporation, Amherst, Ohio
Filed Apr. 16, 1979, Ser. No. 30,461
Int. Cl.³ F04C *1/14, 15/04*
U.S. Cl. 222—190 **27 Claims**

1. Control apparatus for purging pressure in a system wherein a gas/liquid mixture is pumped under pressure, the system being of the type including a rotary pump which mixes the gas and the liquid together and delivers the mixture thereof under pressure through a conduit to a valved dispenser,

said control apparatus comprising,

a gas line for conveying said gas from a source to said pump,

a purge valve in said gas line selectively actuable to cut off the supply of said gas to said pump, and

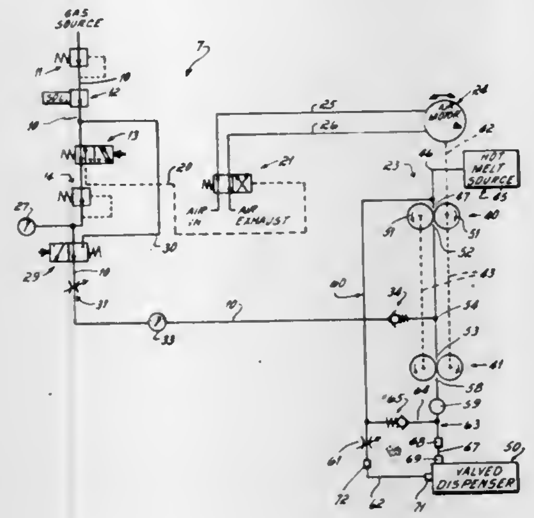

means for reversing the direction of rotation of said pump to reverse the direction of flow of said mixture therethrough, said reversing means being responsive to the actuation of said purge valve,

the reverse operation of said pump substantially reducing the pressure in said conduit.

4,371,097
LIQUID DISPENSING PUMP
Richard K. O'Neill, Hacienda Heights, Calif., assignor to Diamond International Corporation, New York, N.Y.
Filed May 7, 1980, Ser. No. 147,094
Int. Cl.³ B05B *11/00*
U.S. Cl. 222—321 **10 Claims**

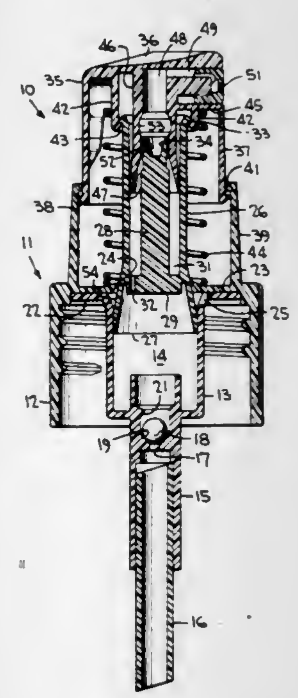

1. A liquid dispensing pump, comprising a pump cylinder defining a pump chamber having a valved inlet opening, a reciprocable piston having an annular piston skirt at one end thereof in sliding engagement with the wall of said chamber between upstroke and downstroke positions of said piston, a discharge head for effecting downstroke movement of said piston, said discharge head having a discharge orifice, and a discharge passage extending through said piston and said head providing communication between said pump chamber and said orifice, said head being in sliding engagement with an opposite end of said piston for limited relative inward and outward shifting movement of said head for opening and closing said discharge passage, said piston having a valve member at said opposite end in engagement with the wall of said discharge passage in said head during the closing of said discharge passage, and said valve member comprising a valve skirt forming an annular opening with an enlarged section in said wall during the opening of said discharge passage, whereby inward depression of said discharge head effects an opening of said passage and moves said piston into said downstroke position, liquid thereby being dispensed from said chamber through said passage and orifice.

4,371,098
ATOMIZER USABLE IN BOTH NORMAL AND INVERTED ORIENTATIONS
Takamitsu Nozawa; Takao Kishi, and Minoru Hinokiyama, all of Tokyo, Japan, assignors to Yoshino Kogyosho Co., Ltd., Tokyo, Japan
PCT No. PCT/JP79/00142, § 371 Date Jan. 11, 1980, § 102(e) Date Jan. 11, 1980, PCT Pub. No. WO80/00011, PCT Pub. Date Jan. 10, 1980
PCT Filed Jun. 6, 1979, Ser. No. 191,336
Claims priority, application Japan, Jun. 7, 1978, 53-77746[U]; Nov. 7, 1978, 53-153522[U]; Nov. 30, 1978, 53-164781[U]
Int. Cl.³ B05E *9/043*
U.S. Cl. 222—321 **9 Claims**

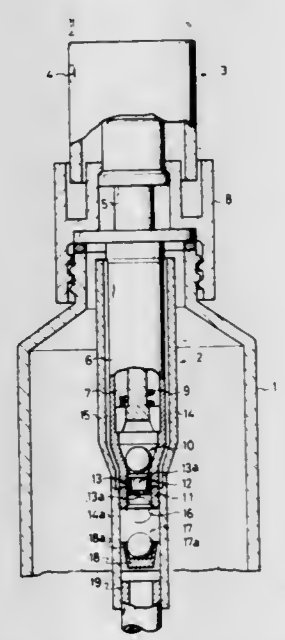

1. In an atomizer having an atomizing head, a first suction passage and associated first suction valve communicating with liquid in a liquid holding vessel, a discharge valve and a nozzle port for discharging liquid under pressure, and a pump mechanism including a cylinder means and a piston, said pump mechanism being adapted to be actuated by the vertical stroking of said atomizing head such that, when said atomizer head is moved upwardly, the pressure in a pressurizing chamber defined between said cylinder means and one end of said piston is decreased to a vacuum so as to allow a liquid to be sucked up from the vessel into said pressurizing chamber through said first suction passage and said first suction valve when said atomizer is operated in a normal orientation in which said atomizer is upright, while when said atomizing head is moved downwardly, a high pressure is established in said pressurizing chamber to forcibly open said discharge valve when the pressure in said pressurizing chamber has been increased beyond a predetermined level so as to allow said liquid to be atomized from said nozzle port in said atomizing head; the improvement comprising: a second suction passage extending upwardly inside the vessel from said first suction valve and communicating with the liquid in an inverted orientation of said atomizer; a second suction valve disposed in said second suction passage and adapted to open only when the pressure in said pressurizing chamber has been reduced down to a vacuum greater than a predetermined vacuum level, in the operation of said atomizer in said inverted orientation; and a check valve disposed in the first suction passage, said check valve being adapted to prevent air in said first suction passage from flowing into said pressurizing chamber when said atomizer is in the inverted orientation; and wherein said second suction valve is adapted to prevent air in said second suction passage from flowing into said pressurizing chamber when said atomizer is in the normal orientation.

4,371,099
SIZE-COMPENSATING COLLAR IN A PUMP DISPENSER
Donald D. Foster, Kingsville, Mo., and Wallace F. Magers, Leawood, Kans., assignors to Realex Corporation, Kansas City, Mo.
Filed Nov. 18, 1980, Ser. No. 207,891
Int. Cl.³ B67D *5/42*
U.S. Cl. 222—321 **7 Claims**

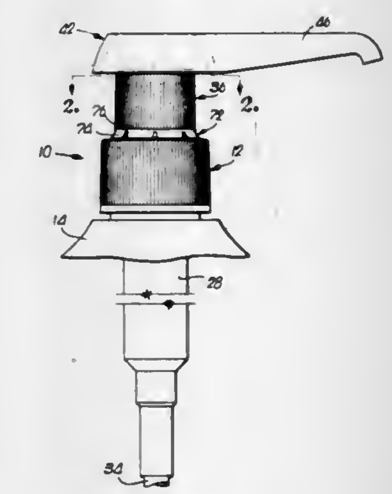

1. In a manually operated dispensing pump having a tubular body, an annular collar secured to one end of the body in axial registration therewith, and a plunger projecting through said collar and reciprocable within the body, the improvement comprising:

a flange on the exterior of said body spaced below said collar in disposition for abutting the underside of the top wall of a closure having an opening through which the pump may project when installed on the closure; and

a clamping element depending integrally from said collar in disposition for bearing against the topside of said top wall of the closure in forcible opposition to said flange when the pump is installed on the closure,

said collar being spaced a predetermined distance from said flange and said element being yieldably resilient away from the latter to the extent necessary to accommodate a variety of top wall thicknesses on a corresponding variety of closures while maintaining a clamping force against the same,

said collar including a radially inner skirt slidably receiving said plunger, a radially outer skirt having said clamping element at one extremity thereof, and a connecting portion adjacent the opposite extremity of the outer skirt joining the skirts to one another and having structure associated therewith for use in locking the plunger in a fully depressed position,

said connecting portion being inflexible relative to said element whereby yielding in the collar to accommodate closure thicknesses occurs in said element rather than said connecting portion and the locking structure.

4,371,100
ADJUSTABLE CARRYING-TOWER ARRANGEMENT FOR METALLURGICAL VESSELS
Gerhard Mühlbauer, Steyr, and Herbert Höller, Schwanenstadt, both of Austria, assignors to Voest-Alpine Aktiengesellschaft, Linz, Austria
Filed Jan. 30, 1981, Ser. No. 229,953
Claims priority, application Austria, Mar. 5, 1980, 1203/80
Int. Cl.³ B22D *41/00*
U.S. Cl. 222—591 6 Claims

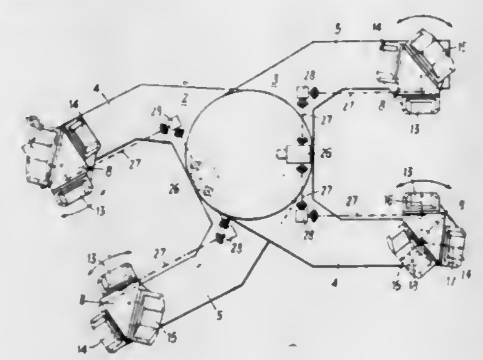

1. In a carrying-tower arrangement for a metallurgical vessel, in particular for a casting ladle of a continuous casting plant, of the type including a supporting column, at least one carrying arm projecting from said supporting column and having two supporting arms adapted for laterally encompassing said metallurgical vessel, carrying means provided on said metallurgical vessel, and supports arranged on said two supporting arms for said carrying means, the improvement which is characterized in that at least two supports are arranged on each of said two supporting arms, which at least two supports differ from one another, are exchangeable for one another, and into which the carrying means of differing metallurgical vessels are fittable.

4,371,101
FILTERING SCREEN FOR USE IN APPARATUS FOR THE DOSING OF POWDERED MATERIAL
Alessandro Cane, and Arrigo Farneti, both of Bologna, Italy, assignors to Zanasi Nigris S.p.A., Bologna, Italy
Filed Oct. 31, 1980, Ser. No. 202,659
Claims priority, application Italy, Oct. 31, 1979, 12799 A/79
Int. Cl.³ G01F *11/10*
U.S. Cl. 222—636 4 Claims

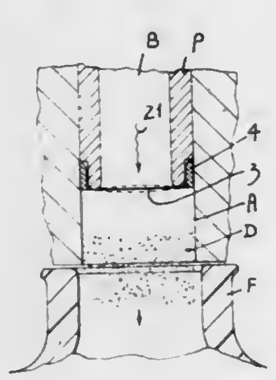

1. In an apparatus for dosing and dispensing finely powdered material employing an open-ended volumetric chamber adapted to receive a predetermined volume of powdered material, said chamber including a bottom wall located opposite to the open end being defined by a filtering screen, suction being applied through the screen to draw and compact powdered material into the chamber, and pressure being applied through the screen to discharge powdered material from the chamber, the improvement comprising said filtering screen being formed of a fabric of mono-filament synthetic material arranged as both the warp and weft of the fabric, and including securing means for clamping and tensioning the screen in relation to the chamber so that the screen is drawn taut over a portion of the securing means to define said bottom wall and vibrates to produce substantially constant deflection when acted upon by a pressurized jet of air.

4,371,102
TROUSER PRESSING APPARATUS
Wilhelm Engelbart, Sieben Hügel Nr. 5, 4800 Bielefeld, Fed. Rep. of Germany
Filed Aug. 8, 1980, Ser. No. 176,524
Claims priority, application Canada, Aug. 8, 1979, 333404
Int. Cl.³ D06F *71/28*
U.S. Cl. 223—73 4 Claims

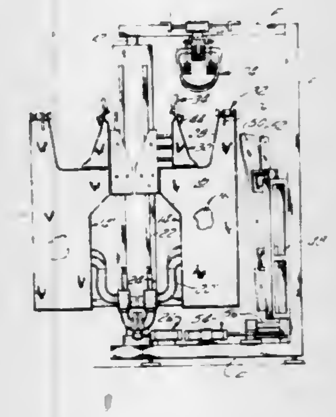

1. A pants pressing apparatus, comprising an upstanding buck member and a buck element associated therewith, said member and said element being mounted for vertical movement between a lower unloading/loading position and a raised pressing position and for pivoted movement about a vertical axis, means on said member and said element for mounting and suspending a pair of pants from the waist/hip portion thereof, said element being mounted for transverse movement relative to said member for tensioning the waist/hip portion of the pants when suspended, means for retaining and gripping the pants with one leg on each side of said buck member, a pair of pressing means each including first and second pressing heads mounted on frame members movable into and out of pressing engagement with outer sides of the pant legs against said buck member, means for transversely moving said first heads relative to said second heads for tensioning the pants to thereby insure good creases, a pressing member for pressing the upper portion of the pants, said pressing member comprising a split head arrangement which is outwardly expandable into pressing engagement with an inner surface of the waist/hip portion of the pants upon movement of said buck member and said buck element into said raised pressing position, upper pressing heads movable into pressing engagement with said waist/hip portion against said split head arrangement, means for laterally moving said arrangement and said upper heads for pressing different sections of said waist/hip portion.

4,371,103
PROCESS AND APPARATUS FOR BREAKING OFF MARGINAL EDGE PORTIONS FROM A GLASS PANE
Walter Siemens; Günther Ulrich, both of Herzogenrath, and Karl R. Bartusel, Stolberg, all of Fed. Rep. of Germany, assignors to Saint-Gobain Vitrage, Paris, France
Filed Nov. 12, 1980, Ser. No. 206,253
Claims priority, application Fed. Rep. of Germany, Nov. 13, 1979, 2945682
Int. Cl.³ C03B *33/04*
U.S. Cl. 225—1 16 Claims

1. Process for breaking off the marginal edge of a glass blank outside of a score of a predetermined outline while the glass blank resides on a level, elastically resilient support and as the surface at least in the area outside of the score is placed in a condition of bending stress by a lowerable tool characterized in that singly and resiliently mounted pressure pins are lowered onto the surface of the glass at a slight distance from one another in such a way that a higher surface pressure is applied to the lateral strip outside of the score by a greater number of pressure pins than is applied to the glass pane inside of the score, which application of pressure at the same time deforms the elastically resilient support through a bending of the lateral strip outside of the score more strongly than inside of the score to thus place the surface provided with the score under a tensile stress causing the lateral strip to break along the score.

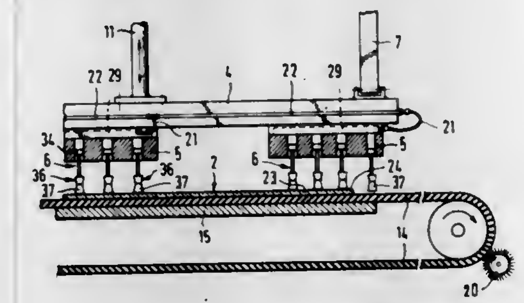

4,371,104
DISPENSER BOX WITH CUTTING EDGE
Ralph J. Korte, Darien, Ill., assignor to Champion International Corporation, Stamford, Conn.
Continuation-in-part of Ser. No. 227,685, Jan. 23, 1981, abandoned. This application Jun. 4, 1981, Ser. No. 270,486
Int. Cl.³ B26D *1/02*
U.S. Cl. 225—48 6 Claims

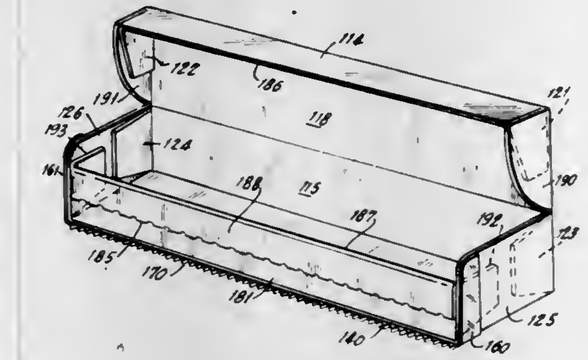

1. A generally rectangular carton formed from a single blank of paperboard material, said carton for storing and dispensing a roll of sheet material, said carton comprising:
substantially identical rectangular top and bottom walls disposed in parallel relationship, said top and bottom walls each having first and second opposed side edges and opposed end edges;
substantially identical rectangular first and second side walls disposed in parallel relationship, said first and second side walls each having first and second opposed side edges and opposed end edges, said side edges of said first and second side walls and said side edges of said top and bottom walls being of equal length, said first side edges of said first and second side walls being foldably connected to the first side edges of said top and bottom walls respectively, said second side edges of said first and second side walls being foldably connected respectively to said second side edges of said top and bottom walls, at least a portion of said first side wall and the portion of said bottom wall adjacent said first side wall being formed by a plurality of layers of said paperboard material secured together and disposed in face-to-face relationship;
first and second end walls foldably connected to and extending between said top, bottom and side wall end edges, at least a portion of said end walls being formed from a plurality of layers of said paperboard material secured together and disposed in face-to-face relationship; and
a relatively stiff reinforcing strip having a serrated edge, said strip being affixed at least to the portion of the bottom wall adjacent said first side wall and being folded and secured in face-to-face relationship with at least a portion of both said end walls, said strip and said plurality of layers of said paperboard material in said first side wall, said bottom wall and said end walls cooperating to reinforce said carton and to prevent warping, distortion or tearing of said carton.

4,371,105
CAM CONTROLLED MULTI-AXIS AUTOMATIC WELDING MACHINE
Vernon L. Melton, 1600 W. Main St., Washington, Mo. 63090
Filed Jul. 23, 1980, Ser. No. 171,453
Int. Cl.³ B23K *37/02, 9/12*
U.S. Cl. 228—7 16 Claims

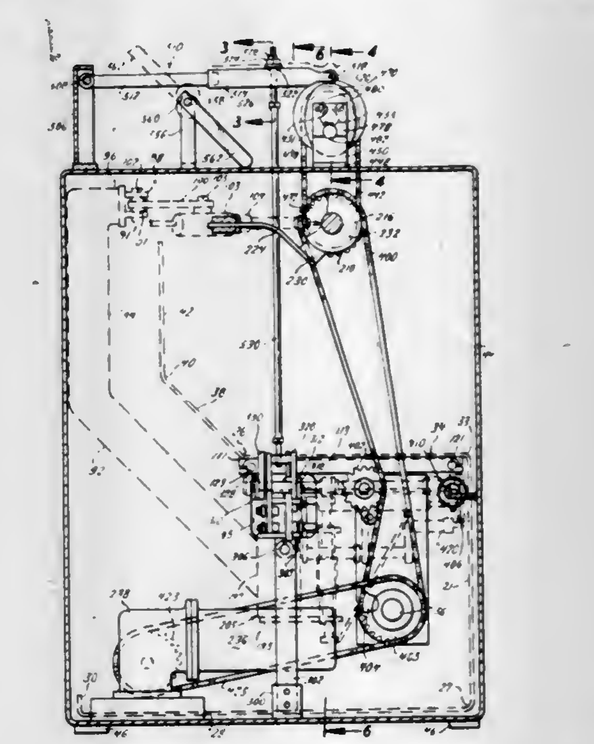

3. A welding machine which comprises a mount for a welding torch, a first cam, a first cam-responsive means intermediate said first cam and said welding torch which can effect rotation of said welding torch about an axis, a second cam, a second cam-responsive means intermediate said second cam and said axis which can effect vertical movement of said welding torch while permitting rotation of said welding torch about said axis, a third cam, a third cam-responsive means intermediate said third cam and said axis which can effect forward-rearward movement of said axis and hence of said welding torch while permitting rotation of said welding torch about said axis, a fourth cam, a fourth cam-responsive means intermediate said fourth cam and said axis which can effect lateral movement of said axis and hence of said welding torch while permitting rotation of said mount about said axis, each of said four cam-responsive means having a plurality of members, each of said members being resistant to bending and remaining substantially free of bending throughout the operation of said welding machine, a first member of the plurality of members of each of said four cam-responsive means being rotatable about an axis of rotation and receiving a driving force from a second member of said plurality of members that is pivotally secured to said first member, said first member responding to said received driving force from said second member to apply a driving force to a third member of said plurality of members which is pivotally secured to said first member, a movable work-holding fixture which is adapted to hold and move a workpiece relative to said welding torch, and mechanical means that physically synchronize the movement of said movable work-holding fixture with movement of said cams.

14. A machine wherein a member can be moved relative to a second member, and which comprises a mount for one of said members, a first cam, a first cam-responsive means intermediate said first cam and said mount which can effect a desired

movement of said mount, and hence of said one member, relative to the other of said members, a second cam, a second cam-responsive means intermediate said second cam and said mount which can effect a different desired movement of said mount, and hence of said one member, relative to said other member, a third cam, a third cam-responsive means intermediate said third cam and said mount which can effect a further desired movement of said mount, and hence of said one member, relative to said other member, each of said cam-responsive linkages having a plurality of members, and each of said members being resistant to bending and remaining substantially free of bending throughout the operation of said machine, a first member of the plurality of members of each of said cam-responsive linkages being rotatable about an axis of rotation and receiving a driving force which is eccentric of said axis of rotation and which is applied by a second member of said plurality of members that is pivotally secured to said first member, said first member responding to said received driving force from said second member to provide a driving force which is eccentric of said axis of rotation and which is applied to a third member of said plurality of members that also is pivotally secured to said first member, means to drive said first, second and third cams, a movable work-holding fixture which is adapted to hold and to move a workpiece, a first frame that is movable laterally to effect lateral movement of said axis, a second frame that is movable forwardly and rearwardly to effect forward-rearward movement of said axis, a third frame that is movable vertically to effect vertical movement of said welding torch, said first member of each of said cam-responsive means being bodily movable with one of said frames, said second member of each of said cam-responsive means being an elongated member and extending from the cam for said cam-responsive means to said first member of said cam-responsive means, whereby any influence which one cam-responsive means could have on any other cam-responsive means is not material.

15. A welding machine which comprises a mount for a welding torch that is movable in a plurality of directions to permit movement of said welding torch in said plurality of directions, a plurality of cams which can supply forces to move said welding torch in said plurality of directions, a plurality of cam-responsive linkages intermediate said cams and said mount for said welding torch which can respond to said forces supplied to said cams to move said welding torch in said plurality of directions, said cams being remote from said mount and from said welding torch, and adjusting means in said cam-responsive linkages which can adjust the position of said welding torch, all of said adjusting means being readily accessible to an operator of said welding machine while said operator is in a position to view said welding torch, whereby said operator can adjust said adjusting means while viewing said welding torch.

4,371,106

METHOD OF AND STAND FOR DISASSEMBLING STRUCTURES SUCH AS RADIATORS

Robert M. Chapman, R. D. 1, Box 1040, Mohnton, Pa. 19540

Filed Oct. 15, 1980, Ser. No. 197,153

Int. Cl.³ B23K *3/04, 1/18*

U.S. Cl. 228—19 **10 Claims**

1. A disassembly stand for disassembling a structure by separation of first and second parts that are joined together by a meltable bonding medium comprising: (A) a frame; (B) heating means mounted to said frame and configured to substantially simultaneously direct heat along a major extent of a junction between said first and second parts; (C) suspension means carried by said frame for suspending said structure by said first part with said junction in alignment with said heating means; and (D) means for causing opposing forces to act upon first and second parts while said structure is suspended by said suspension means and the junction heated, wherein said means for causing comprises a vertically adjustable platform means for receiving said structure in a first, lower position, for supporting said structure during mounting thereof to said suspension means in a second, raised position, and for shifting the

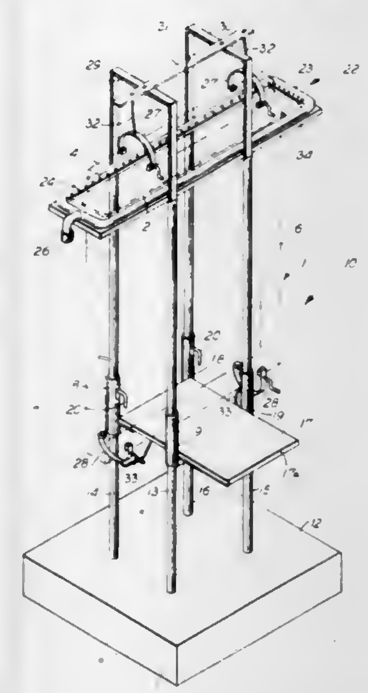

weight of said structure to said suspension means in a third, intermediate position between said first and second positions.

4,371,107

WELDING MACHINE

Toshihiko Watanabe, Kamakura; Naoki Takeuchi, Chigasaki; Soichi Tsuruga, and Tadatsugu Koishi, both of Kamakura, all of Japan, assignors to Kobe Steel, Ltd., Kobe, Japan

Continuation of Ser. No. 89,740, Oct. 31, 1979, abandoned. This application Nov. 23, 1981, Ser. No. 324,082

Claims priority, application Japan, Oct. 31, 1978, 53-134994

Int. Cl.³ B23K *9/12, 37/02*

U.S. Cl. 228—32 **7 Claims**

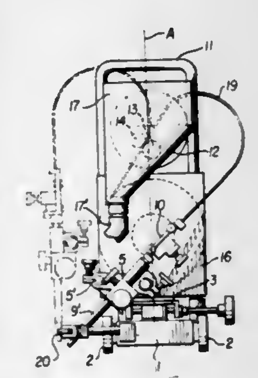

1. A welding machine comprising:

a wheeled platform movable along a predetermined path and having a longitudinal center line and sides lateral to said path;

a torch support fixed to said platform;

a welding torch movably supported by one end of said torch support for movement into at least one welding position on each of said lateral sides;

a coiled wire reel rotatably fixed to said platform and rotatable about an axis contained in a vertical plane passing through said center line;

wire supply means fixed to said platform above said reel and disposed about said vertical plane and composed of a wire supply drive mechanism, a supply roll located on said vertical plane and a pressure roll positionable against said supply roll;

a rotatable wire corrector affixed to one end of said torch; and

a flexible and substantially nonexpansive wire guide connecting said wire supply means and said wire corrector, whereby the mounting of said wire supply means to said platform above said reel and disposed about said vertical plane enhances the stability of said machine in any welding position.

4,371,108

METHODS OF MANUFACTURING LARGE TUBULAR COLUMNS

Stephen Roggendorff, and Cuthbert J. Walker, both of 1 Cricketers Parade, Worthing, West Sussex, BN14 9DB, England

Filed Sep. 19, 1980, Ser. No. 188,751

Claims priority, application United Kingdom, Aug. 9, 1980, 8026041

Int. Cl.³ B23K *31/02*

U.S. Cl. 228—173 C **11 Claims**

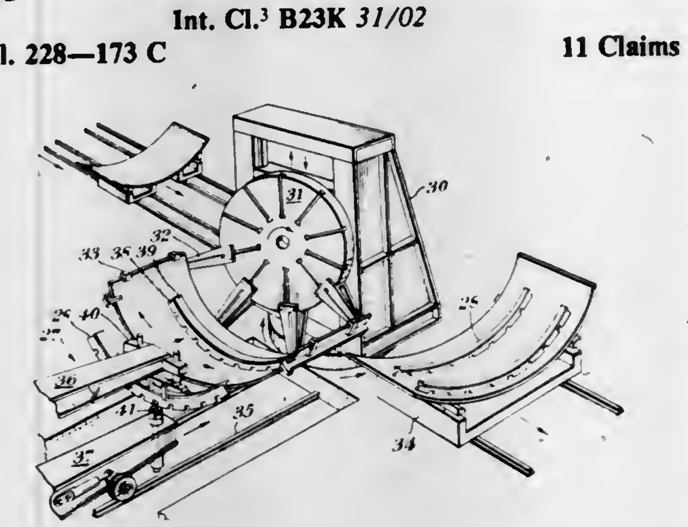

1. A method of manufacturing tubular members in which metal plate is rolled into a plurality of shell segments of arcuate cross-section, in which each of said rolled shell segments is transported to a first positioner having clamping means mounted on a circular plate which is rotatable about a horizontal axis in a tower body which is itself rotatable about a vertical axis, in which a plurality of metal stiffening ring segments of arcuate cross-section are welded to the concave surface of each of said rolled shell segments to form stiffened shell segments, the angular extent of each of the ring segments being less than that of each of the the shell segments so that a space is left at each end of each of the rolled shell segments which is free from ring segments, in which a plurality of stiffened shell segments are assembled and welded together to form a tubular section, and in which a plurality of said tubular sections are assembled coaxially end-to-end and welded together to form a longitudinally extending tubular member.

4,371,109

TWO-CELL BULK CONTAINER TUBES

Donald M. Tanner, Lakewood, Calif., and Herbert M. Potts, Yulee, Fla., assignors to Container Corporation of America, Chicago, Ill.

Filed May 22, 1981, Ser. No. 266,497

Int. Cl.³ B65D *5/32, 13/00*

U.S. Cl. 229—28 R **2 Claims**

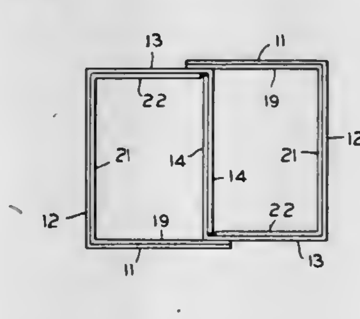

1. Two-cell bulk container tubes for a fungible product such as grain comprising:

(a) a pair of congruent tubes adjacent to each other, each being formed from four hingedly connected walls to provide a first inner side wall, opposed outer end walls and an outer side wall;

(b) said opposed outer end and said outer side walls being laminated at the insides thereof to second outer walls conforming to said opposed outer end walls and said outer side wall;

(c) said first inner side walls being laminated together to define a pair of longitudinal cells each having double thickness outer walls and a double thickness common inner wall, the outer surfaces of said first inner side walls being disposed in face-to-face relation to each other; and

(d) one of the longitudinal end outer walls of each tube extending in overlying relationship with the laminated outer end wall of the opposite longitudinal end of the adjacent tube and being laminated together to provide a manufacturer's joint composed of four laminae at each longitudinal end of said tubes to give good stacking strength of said tubes when loaded with a fungible product.

4,371,110

SHEET CAKE TRAY CARTON

Francis V. Kulig, Morris, Ill., assignor to Federal Paper Board Company, Inc., Montvale, N.J.

Filed Mar. 11, 1981, Ser. No. 242,438

Int. Cl.³ B65D *5/24*

U.S. Cl. 229—31 FS **4 Claims**

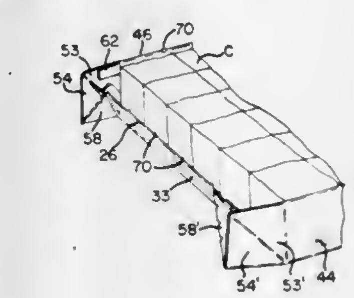

1. A container structure for handling a bakery product in the form of a sheet cake which is to be divided into serving portions after being baked in a conventional baking oven, decorated and cut without removal from the container, said container structure comprising a relatively shallow depth tray structure which is dimensioned to accommodate a sheet cake of substantial size, said tray structure being formed from a cut and scored blank of paperboard having a film coating enabling it to withstand conventional baking oven temperatures without destruction, said tray structure comprising a bottom wall forming panel and upstanding peripheral side and end wall forming double thickness panels with integral foldable corner connecting web structures, said side wall panels comprising an outer panel and an inner panel foldable about a top edge forming score line and adhesively secured to the inside face of said outer panel, said end wall forming panels comprising an outer panel integrally connected at its opposite ends to the adjacent ends of said side wall forming outer panels by said foldable web structure, said web structure each comprising a pair of integral triangular web portions foldable upon each other and against the inner face of the outer end wall panel, said side wall forming inner panels each having at opposite ends small locking recesses adjacent the inner bottom corners, and said inner end wall forming panels each having at its inner bottom corners bendable locking tab elements which are contoured and dimensioned to fit in said locking recesses, said inner end wall forming panels having hinged marginal strips adapted to be positioned on the inner face of the bottom wall forming panel and extending along a hinge line, said end wall forming outer panels having diagonal scores at each end extending from the bottom hinge line to an end wall top edge forming score line about which said inner and and outer end wall panels are folded forming said double thickness end walls and thereby

entrapping said foldable web structure therebetween when said container structure is erected, said end wall top edge forming score lines having the terminal portions thereof perforated to form readily torn terminal fold portions for readily releasing said foldable web structure entrapped between the ends of the inner and outer end wall panels and thereby freeing the end and side walls for downward hinging movement to provide ready access to the end portions of the product.

4,371,111

HOME HEATING SYSTEM EMPLOYING WATER HEATER AS HEATING SOURCE

Richard J. Pernosky, 2001 Fairoaks, South Pasadena, Calif. 90130

Filed Jun. 24, 1980, Ser. No. 162,401

Int. Cl.³ F24D *3/00*

U.S. Cl. 237—8 R **6 Claims**

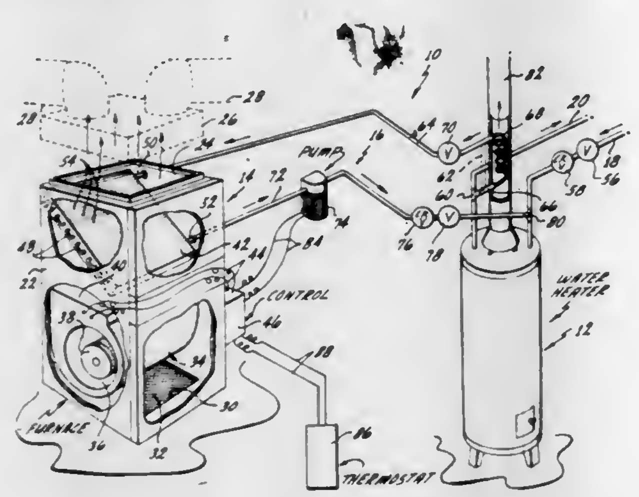

1. A heating system including an air distribution system and a water heater having a cold water inlet and a hot water outlet which comprises:

a housing;

said housing including an air inlet opening and an air outlet opening, said air outlet opening sized and shaped to mate with and form an essentially airtight connection with said air distribution system, said air inlet opening sized to allow a volume of air to be drawn into said housing;

a first heat exchanger means located within the interior of said housing and capable of receiving a stream of hot water and transferring at least a portion of the heat content of said stream of water to a volume of air present within the interior of said housing;

said first heat exchanger means including water inlet means and water outlet means, said stream of hot water entering said first heat exchanger means at said water inlet means and being discharged from said first heat exchanger means at said water outlet means;

a blower means located within the interior of said housing and capable of moving a volume of air within the interior of said housing between said air inlet and outlet openings and contacting said moving volume of air with said first heat exchanger means such that the transfer of said heat from said stream of hot water to said volume of air within the interior of said housing is affected and after said heat is transferred to said volume of air to force said volume of air through said air distribution system;

a hot water conduit means connected between said water inlet means of said first heat exchange means and said hot water outlet of said water heater and capable of conducting a stream of hot water from said water heater to said first heat exchanger means;

a water return conduit means connected between said water outlet means of said first heat exchange means and said cold water inlet of said water heater and capable of returning water discharged from said first heat exchanger means to said hot water heater;

a pump means operatively connected to one of said hot water conduit means or said water return conduit means and capable of forcefully moving water through a pathway comprising said hot water conduit means, said first heat exchanger means, and said water return conduit means;

said water heater being of the type wherein a fuel is combusted within a burner to heat said water in said water heater and including a flue leading from the burner of said water heater to the atmosphere;

a second heat exchanger means located so as to form a portion of said hot water conduit means and positioned within said flue and capable of extracting heat from combustion gases passing through said flue from said burner to the atmosphere and

said blower means comprising a fan means and an electric motor operatively attached to said fan means and capable of activating said fan means to transfer said volume of air whereby water heated by said burner in said hot water heater first passes from said hot water heater to said second heat exchanger means for supplemental heating prior to passing through said first heat exchanger means.

4,371,112

AUXILIARY AIR HEATER

Paul Tholen, Gladbach, Fed. Rep. of Germany, assignor to Klockner-Humboldt-Deutz AG, Cologne, Fed. Rep. of Germany

Filed Feb. 11, 1981, Ser. No. 233,573

Claims priority, application Fed. Rep. of Germany, Feb. 16, 1980, 3005966

Int. Cl.³ B60N *27/00*

U.S. Cl. 237—12.3 A **8 Claims**

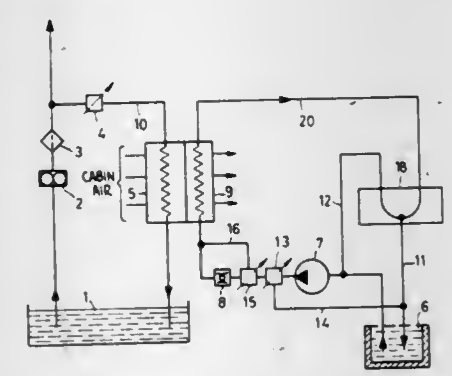

1. An arrangement for heating the operator's cabin of a motor vehicle, comprising a liquid circulation system of the vehicle including a liquid medium for cooling or lubricating the engine, means for circulating the liquid medium through the circulation system, a main heating circuit in said circulation system including a main heat exchanger for heating air by indirect heat exchange with the liquid medium that is heated by engine heat generated by the engine, valve means in said circulation system for controlling the rate of liquid medium flow to the engine for cooling or lubricating or to said main heat exchanger for heating the air, whereby to assure an adequate quantity of liquid flow required for said circulation system and to make available a sufficient quantity of liquid flow through said main heating circuit for heating purposes, an auxiliary heating circuit containing an auxiliary stream of liquid medium and having a hydraulic pump for delivering the auxiliary stream through the auxiliary circuit via a pressure-reducing element to an auxiliary heat exchanger, the pressure of the auxiliary stream through said element being converted into heat for increasing the temperature of same, said heat exchangers being connected in series relative to the flow of air therethrough with said auxiliary heat exchanger being arranged on the downstream side of said main heat exchanger.

4,371,113

IRRIGATION SYSTEM

Woodrow M. Ross, 1863 Algodon Rd., Marysville, Calif. 95901

Filed Sep. 16, 1980, Ser. No. 187,979

Int. Cl.³ B05B *15/06*

U.S. Cl. 239—201 **8 Claims**

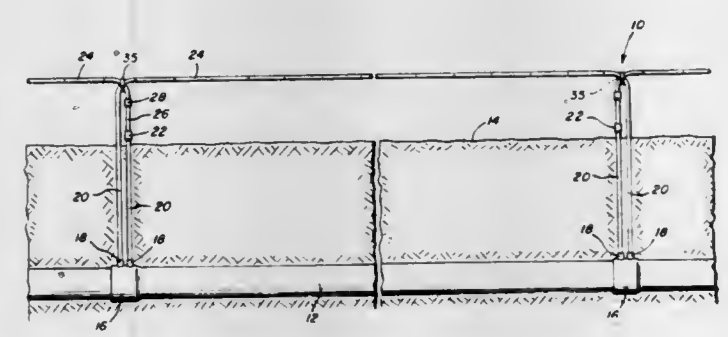

1. An irrigation system for delivering irrigation water to a desired location, said system comprising: main water supply means; conduit means attached to said main water supply means for directing said irrigation water therefrom; coupling means for connecting said conduit means to said main water supply means; distribution means for receiving said irrigation water directed from said main supply water means, said distribution means including an emitter conduit means having orifices therein for distributing said irrigation water to said desired location, said emitter conduit means further having two ends, both of said ends being in communication with said main water supply means, said main water supply means comprising sections of plastic irrigation pipe, said plastic irrigation pipe having male and female ends thereon so as to effect a double-walled connection between said sections, said main water supply means being substantially buried beneath a ground surface, said coupling means for connecting said conduit means to said main water supply means including at least one aperture extending through said double-walled connection of said main water supply means, said aperture having a nipple means fixedly attached therein, said conduit means being fixedly secured to said nipple means to thereby effect a communication between an interior portion of said main water supply means and said conduit means, said double-walled connection serving to rigidly support said nipple means and said conduit means attached thereto, said conduit means and said nipple means being constructed of PVC pipe, said conduit means further including a separable extension means attached thereto, said extension means serving to fluidly connect said conduit means with said distribution means, said extension means being fixedly secured between said distribution means and said conduit means through the use of additional nipples, said additional nipples and said extension means all being constructed of PVC material, an additional aperture being provided in said double-walled connection thereby to provide for a second conduit means to be attached to a second nipple means fixedly secured thereto, said second conduit means being fluidly connected to a second distribution means, said first and second distribution means being in an abutting relationship so as to mutually support each other in a position above said ground surface.

4,371,114

SPRAYING GUN

Vilmos Weiperth, and Tibor Lezsak, both of Budapest, Hungary, assignors to Chemokomplex Vegyipari Gepes Berendezes Export Import Vallalat, Budapest, Hungary

Continuation-in-part of Ser. No. 101,189, Dec. 7, 1979, abandoned, which is a continuation of Ser. No. 954,458, Oct. 25, 1978, abandoned, which is a continuation of Ser. No. 702,842, Jul. 6, 1976, abandoned. This application Sep. 2, 1980, Ser. No. 182,985

Int. Cl.³ A62C *13/40*

U.S. Cl. 239—309 **5 Claims**

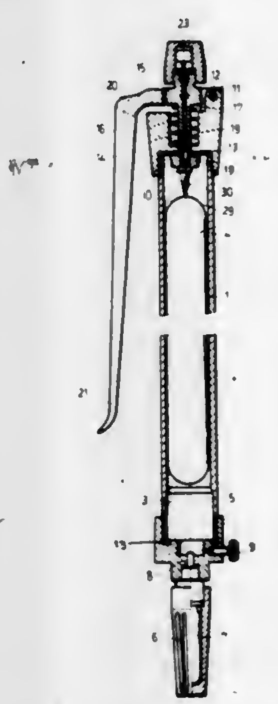

1. A spraying gun for atomizing liquid substances, comrpising, in combination: an elongated tubular body having at one end thereof a compressed gas cartridge receiving closure head; and at the other end a gun head with an atomizer, a regulating valve, and means for operating said valve; a freely movable elastic partition member which divides said tubular body into a gas and liquid tight gas space and an adjoining, separate liquid and gas tight liquid space; threaded gas and liquid tight connections and sealing members between said tubular body, on the one hand, and each of said closure and said gun heads, on the other hand; a safety valve in said closure head which optionally releases the pressure from at least said gas space; wherein said partition member is in the form of a piston that has at least one front surface provided with a threaded blind bore for removably receiving a manipulating rod therein; wherein said operating means is intermediate along the geometric axis of the gun between said atomizer and said valve, and includes a laterally protruding, pivotable long handle that allows fine regulation of said valve when manually engaged at its free outer end; and wherein said tubular body, said liquid space, said gun head, said valve and said atomizer are substantially coaxial with the geometric axis allowing discharge of the liquid with a minimum of frictional resistance along its path.

4,371,115

RING-GAP NOZZLE

Franz Sedlacek, Weingarten, Fed. Rep. of Germany; Jakob Oertle, Winterthur, and Dietrich Cebulla, Lucerne, both of Switzerland, assignors to Escher Wyss Limited, Zurich, Switzerland

Filed Feb. 22, 1979, Ser. No. 13,918

Claims priority, application Switzerland, Mar. 1, 1978, 22017/82

Int. Cl.³ B05B *1/26*

U.S. Cl. 239—524 **9 Claims**

1. In a ring gap nozzle for distributing a fluid medium over a plate and comprising an axial channel through the plate; a cap

covering the channel and spaced from the plate to define a ring gap having an exit which opens radially outward and is free of obstructions; means affixing the cap to the plate including a connecting member which is coaxial with the channel and holds the cap on a clamp member carried by the plate; and means defining an annular flow path through the nozzle including an axial portion in the channel through which said fluid medium enters the nozzle, a deflection portion in which fluid medium delivered through the axial portion is deflected

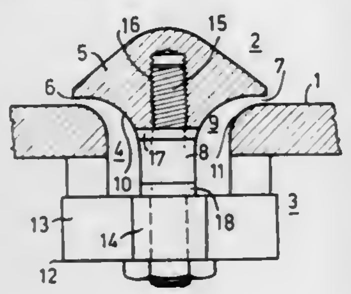

and directed radially outward, and a rotationally symmetrical guiding portion which leads fluid medium from the deflection portion to the exit of the ring gap, the improvement wherein said annular flow path is bounded in part between curved, rotationally symmetrical walls, one of which is a wall of said cap; and wherein at least that part of the annular flow path including said deflection and guiding portions has a flow area which decreases continuously in the direction of flow of said medium.

4,371,116
VARIABLE REACTANCE ALIGNMENT DETECTOR AND CONTROL

David M. Sage, 819 High St. #210, Bellingham, Wash. 98225, and George E. Sage, 22002 Redmond-Fall City Rd., Redmond, Wash. 98052

Division of Ser. No. 893,345, Apr. 4, 1978, abandoned, and a continuation of Ser. No. 151,166, May 19, 1980, Pat. No. 4,266,732, which is a continuation of Ser. No. 893,345, Apr. 4, 1978, abandoned. This application Jan. 5, 1981, Ser. No. 222,549

Int. Cl.³ B05B *3/00*

U.S. Cl. 239—720 **9 Claims**

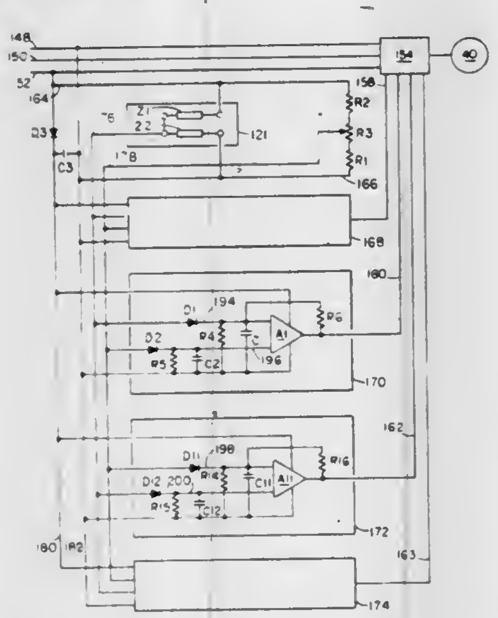

1. An alignment sensor for use in monitoring the angular relationship between two articulating members having a variable angular relationship with respect to each other, and which is sensitive to angular misalignment of the two members in a first plane which contains the members when aligned and relatively insensitive to angular misalignment in a second plane normal to the first plane which also contains the members when aligned; comprising, at least one variable inductance element which includes:

(a) one inductive coil;

(b) a first core element connected to the first member for movement with the member, forming a segment of a flux path for the coil and supporting the coil, including:

(1) a central element on which the coil is mounted and

(2) a pair of elongated, lateral elements connected to the central element on opposite sides of the coil, each lateral element having its longitudinal axis parallel to the plane to which the insensitivety is desired and normal to the plane in which the sensitivety is desired and wherein the length of said lateral elements is substantially greater than the dimension of a second core element in the longitudinal direction of the lateral elements; and

(c) said second core element connected to the second member for movement with the member, positionable relative to the first core element to form with the first core element a complete flux path for the coil and defining variable air gaps between the first and second core element so that variations in alignment of the members move the core elements relative to one another to vary the size of the air gaps to vary the inductance of the coil.

4,371,117
PRODUCTION OF POWDERED SUGAR

Andreas von Bennigsen-Mackiewicz, and Christoph von Bennigsen-Mackiewicz, both of 17, Mühlenstrasse, 3211 Banteln, Fed. Rep. of Germany

Continuation of Ser. No. 53,170, Jun. 29, 1979, abandoned. This application Mar. 30, 1981, Ser. No. 248,751

Int. Cl.³ B02C *23/20*

U.S. Cl. 241—18 **11 Claims**

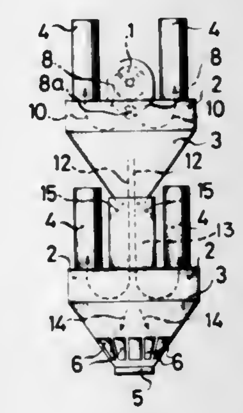

1. A process, for the production of dried powdered sugar, comprising:

(i) providing a powdering device,

(ii) placing refined sugar in crystalline state in said powdering device,

(iii) reducing the crystalline sugar to powder by operation of the powdering device,

(iv) passing the powdered sugar directly and downwardly from the powdering device into a fluidizing chamber having filtration walls adapted to permit passage therethrough of air but not of powdered sugar,

(v) retaining the powdered sugar suspended in the fluidizing chamber for a dwell period and, whilst said powdered sugar is in said chamber, passing air into said powdered sugar to cause it to be dried whilst being fluidized therein, the duration of the dwell period being selected to ensure total drying of the powder,

(vi) temporarily terminating the passage of drying air into the fluidizinig chamber, and

(vii) whilst the passage of air is temporarily terminated, removing the dried powdered sugar from the fluidizing chamber.

4,371,118
MAGNETIC SAFETY INTERLOCK METHOD AND APPARATUS FOR FOOD PROCESSOR

Carl G. Sontheimer, Greenwich, Conn., and Allen F. Podell, Palo Alto, Calif., assignors to Cuisinarts, Inc., Greenwich, Conn.

Filed Jun. 2, 1980, Ser. No. 155,200

Int. Cl.³ B02C *18/16*

U.S. Cl. 241—30 **33 Claims**

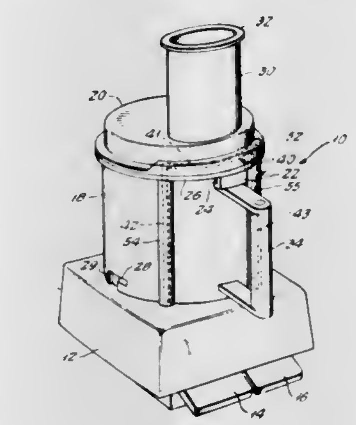

1. In a food processor of the type including tool drive means located in a base with control means for rendering the tool drive inoperative unless said control means is actuated, a bowl mountable on said base for enclosing a rotatable tool within said bowl, a removable cover for said bowl, a food-receiving hopper extending through the cover for feeding food items through the cover into the bowl to a tool rotatable by said tool drive means, and a food pusher manually insertable into said hopper for pushing the food items in said hopper toward the rotating tool, protective interlock apparatus comprising:

first magnetic means associated with the cover,

said first magnetic means becoming positioned in a predetermined position when the bowl is mounted on the base in proper position and when the cover is in proper position on the bowl,

second magnetic means in the base coupled with said control means for actuating said control means for rendering the tool drive operative only when said first magnetic means has become positioned in said predetermined position, and

discriminating means associated with said second magnetic means for preventing actuation of said control means except by the intended first magnetic means.

4,371,119
AGITATOR-TYPE BALL MILL

Albert Leuthold, Basel, Switzerland, assignor to Willy A. Bachofen AG, Basel, Switzerland

Filed Jan. 14, 1980, Ser. No. 111,992

Claims priority, application Switzerland, Jan. 18, 1979, 477/79

Int. Cl.³ B02C *17/18*

U.S. Cl. 241—66 **18 Claims**

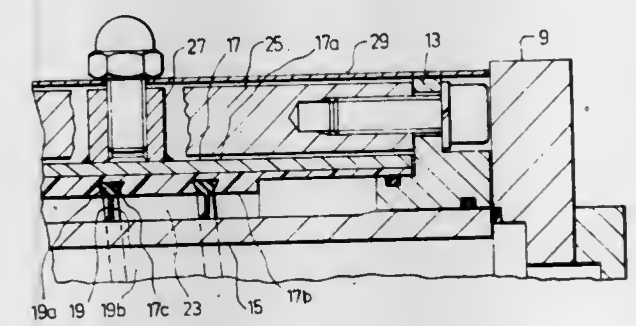

1. An agitator-type ball mill, comprising a circumferential wall which bounds a working chamber having an axis, said wall including two radially spaced jackets which form therebetween a gap in which a heat-exchange and a cleaning medium can be received and in which a deposit of foreign material tends to form; means for releasably connecting said jackets with one another and arranged so that said jackets can be separated from each other by displacement in an axial direction; and means for forming a substantially helical passage in said gap including a member which is connected with one of said jackets and extends in said gap to the other of said jackets, said member being elastic and shaped so that when the heat-exchange medium is supplied into said gap in one axial direction said member due to the elasticity of said member abuts against said other jacket and thereby maintains said helical passage, whereas when a cleaning medium is supplied in said gap in another axial direction which is opposite to said one direction said cleaning medium lifts said member from said other jacket thereby facilitating removal of the foreign material deposits.

4,371,120
PARTICLE GRINDER WITH HIGH DEGREE OF SOUND ISOLATION

Jean P. Grapin, Frontignan; Gilbert Gauthier, Belmont, and Francis Deltruc, Lozanne, all of France, assignors to Ciments Lafarge France, Saint-Cloud, France

Filed Dec. 3, 1980, Ser. No. 212,592

Claims priority, application France, Dec. 3, 1979, 79 29686

Int. Cl.³ B02C *17/18*

U.S. Cl. 241—284 **7 Claims**

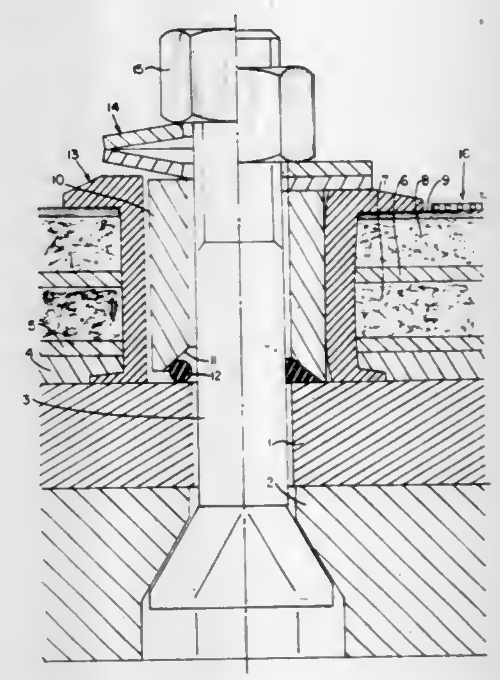

1. In a particle grinder apparatus including a rotatable container for crushing materials inserted therein, the improvement comprising:

said container having at least one opening in a wall thereof,

sound insulation means covering a major portion of the exterior surface of the wall of said container,

elongated fastening means including an elongated stationary part and a movable part engaged thereon, said elongated part passing through said opening and through said sound insulation means and being operable for fastening said sound insulation means to said container,

a first sleeve at least partially surrounding said elongated fastening means within a region adjacent said opening,

a resilient second sleeve at least partially surrounding said first sleeve and including external flanges, said sound insulation means abutting said flanges of said second sleeve,

resilient sealing means disposed around a portion of said elongated part of the fastening means, and between said first sleeve and said container, and

elastic means disposed between said sleeves and said movable part of said fastening means, whereby, upon said movable part being tightened on said elongated part, said

second resilient sleeve is compressed substantially in an axial direction by said elastic means, thereby establishing at least partial contact between an exterior peripheral portion of said first sleeve and an interior peripheral portion of said second sleeve, and sound-proofing said opening.

4,371,121
YARN WINDING DEVICE

Horst Feiler, Ebersbach, and Gunter Konig, Uhingen-Baiereck, both of Fed. Rep. of Germany, assignors to Zinser-Textilmaschinen GmbH, Ebersbach, Fed. Rep. of Germany

Filed Jul. 30, 1981, Ser. No. 288,452

Claims priority, application Fed. Rep. of Germany, Jul. 30, 1980, 3028826; Jun. 5, 1981, 3122385

Int. Cl.³ B65H *54/02, 54/28*

U.S. Cl. 242—18 DD **18 Claims**

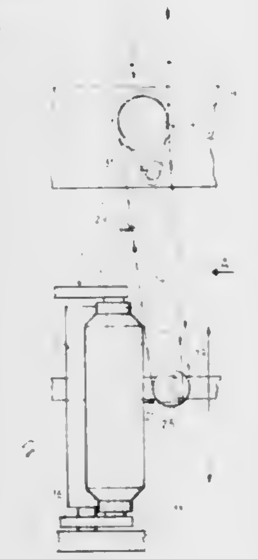

1. A high speed yarn winding device for forming a parallel winding for yarn windings which intersect within each winding layer, the device comprising a yarn winding body means for receiving the yarn, means for interchangeably and rotatably carrying the winding body means, means for directly supplying yarn to the winding body means, guide means displaceable in parallel to an axis of rotation of the winding body means, and wheel means rotatably mounted on the guide means for deflecting the yarn to the supplying means so as to superimpose rapid and short modulating strokes on the displacement of the guide means to wind the yarn into the parallel winding, characterized in that the wheel means includes at least one round driving surface means arranged concentric to an axis of rotation of the wheel means for enabling the yarn to drive the wheel means, and at least one yarn deflecting element is disposed eccentrically on the wheel means, and in that yarn transport means are for driving the wheel means and for feeding the yarn to the at least one yarn deflecting element.

4,371,122
METHOD AND APPARATUS FOR WINDING STRAND MATERIAL AND PACKAGE

Marius C. Schuller, Guelph, Canada, assignor to Fiberglas Canada, Inc., Ontario, Canada

Filed May 8, 1980, Ser. No. 147,729

Claims priority, application Canada, Feb. 29, 1980, 346760

Int. Cl.³ B65H *54/08, 54/28, 55/00*

U.S. Cl. 242—43 R **18 Claims**

1. Apparatus for winding strand material into a package, comprising:
a winding mandrel;
means for rotationally driving said winding mandrel;
means for guiding said strand material in the vicinity of said mandrel;
cam means for reciprocating said guide means parallel to the axis of said winding mandrel for forming a package build of said winding mandrel;
means for moving the strand guide means and said cam means away from said winding mandrel as the diameter of said package build increases;
said mandrel drive means including mandrel speed control means for progressively reducing the speed of rotation of said winding mandrel during the winding of said package to compensate for increases in the diameter of the package build; and

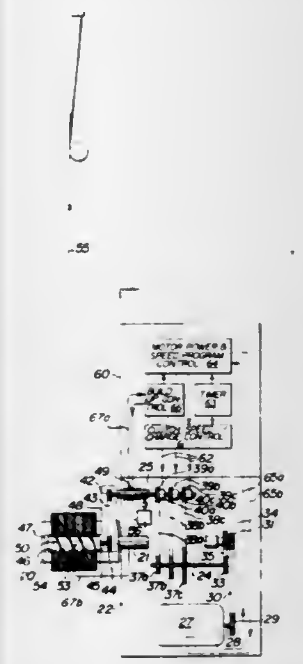

means for rotationally driving said cam means in synchronous relation to the decreasing speed of said winding mandrel whereby the speed of rotation of said cam means decreases in accordance with the mandrel speed reduction;
said cam drive means comprising means for increasing the rotational speed of said cam means a plurality of times during the winding of said strand material on said package build to counteract reduction of the helix angle at which the strand material is wound on the package build as the winding mandrel speed decreases.

4,371,123
TAPE REEL

Koji Watanabe, Fujisawa, Japan, assignor to Nifco Inc., Yokohama, Japan

Filed Feb. 27, 1981, Ser. No. 239,006

Claims priority, application Japan, Feb. 28, 1980, 55/24256[U]

Int. Cl.³ B65H *75/18*

U.S. Cl. 242—71.8 **6 Claims**

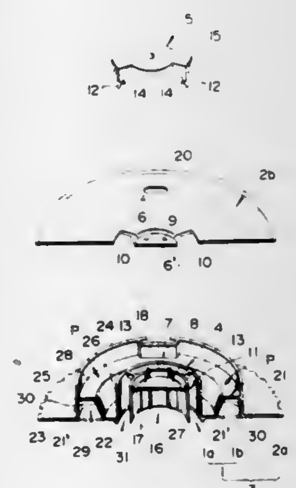

1. In an injection-molded plastic tape reel comprising a hub

which includes an inner cylindrical part defining a socket for engagement with a playback-machine shaft, and an outer cylindrical part adapted to permit a tape to be wound into a roll thereon, and flanges attached one each to the opposite ends of said hub, said inner cylindrical part and said outer cylindrical part being connected to each other through means of an annular portion which includes a lower, radially inner horizontally disposed portion, an intermediate axially-upward, radially-outward inclined portion, and an upper, radially outer horizontally disposed portion, said annular portion defining an annular recess therebeneath, said radially inner horizontal portion being joined to the lower axial end of said inner cylindrical part while the radially outer horizontal portion is joined to said outer cylindrical part at a location approximately halfway upwardly along the axial extent thereof, the improvement comprising:
radially extending means, connected between said inclined portion of said annular portion upon the undersurface thereof and the inner wall surface of said outer cylindrical part so as to span said annular recess, for providing a plurality of auxiliary flow paths for the molten resin during said injection molding of said tape reel directly between said radially inner portion of said annular portion and one of said flanges which is integrally molded with the lower axial end of said hub, said auxiliary flow paths being substantially shorter than the normal flow paths over which said molten resin would otherwise travel between said radially inner portion of said annular portion and said one of said flanges.

4,371,124
DRAG SYSTEM FOR SPINNING STYLE FISHING REEL

Richard L. Gifford, Tulsa, and Richard R. Councilman, Collinsville, both of Okla., assignors to Brunswick Corporation, Skokie, Ill.

Filed Oct. 18, 1979, Ser. No. 85,925

Int. Cl.³ A01K *89/01, 89/02*

U.S. Cl. 242—84.51 A **1 Claim**

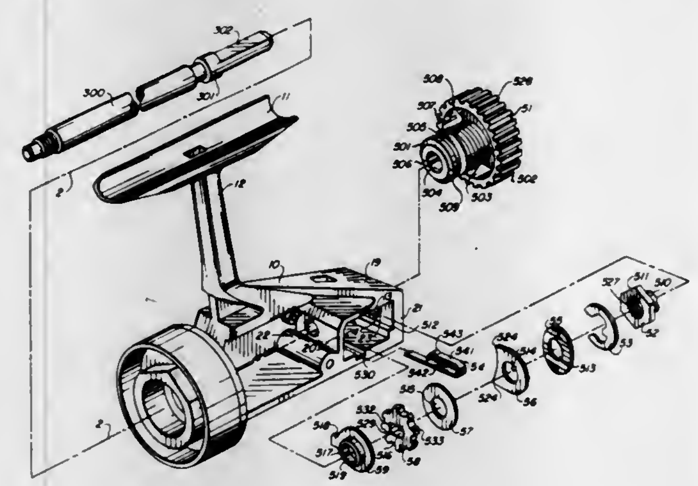

1. In a spinning reel having a housing with a front spool end and a back drag end, a housing having an integral substantially right parallelepiped shaped pocket at the drag end with an inwardly positioned partition comprising one side of the parallelepiped having a first hole therein, an opposite surface of the parallelepiped at the back of the housing having a second hole in axial alignment with the first hole, a movable center shaft mounted in the housing in axial alignment with the first and second holes and having a front end extending outwardly from the front spool end of the housing and a back end having a key means extending into the pocket, a drag assembly mounted partially within the pocket comprising:
(a) thread means in operable association with the second hole;
(b) a knob having:
(1) a head mounted exterior to the housing,
(2) a shank having a distal end projecting in to the second hole and a proximal end secured to the head, the shank having a threaded portion in mating engagement with the thread means and a coaxial passageway for sliding fit with the back end of the shaft, and
(3) bearing means at the distal end of the shank facing axially of the shaft,
(c) disc spring means mounted in the pocket adjacent the bearing means and having a hole coaxial with the passageway,
(d) D-shaped means mounted in the pocket adjacent the spring means and having a hole coaxial with the passageway, the D-shaped means coacting with the pocket to prevent rotation of the D-shaped means while permitting axial movement of the D-shaped means;
(e) first washer means mounted in the pocket adjacent the D-shaped means and having a hole coaxial with the passageway;
(f) drive means mounted in the pocket adjacent the washer means and having a hole mating with the key means on the shaft, the drive means having a serrated exterior surface;
(g) second washer means mounted in the pocket between the drive means and the partition and having a hole coaxial with the passageway;
(h) the back end of the shaft extending into the passageway and rotatable therein, the shaft being freely rotatable when the knob is set to provide minimal urging force between the first washer means, the drive means and the second washer means, and rotation of the shaft being limited when the knob means is advanced into the pocket to place the spring means under compression and to force the spring means, the D-shaped means, the first and second washer means and the drive means tightly against the partition thereby limiting rotation of the drive means and concomitantly the shaft; and
(i) a J-shaped spring means seated in an undercut groove in the pocket adjacent the drive means, the J-shaped spring means has a short leg in contact with the serrated exterior surface which vibrates making a clicking sound when the drive means rotates.

4,371,125
SAFETY BELT SYSTEM

Rudolf Andres, and Helmut Grantz, both of Sindelfingen, Fed. Rep. of Germany, assignors to Daimler-Benz A.G., Stuttgart, Fed. Rep. of Germany

Filed Nov. 17, 1980, Ser. No. 207,799

Claims priority, application Fed. Rep. of Germany, Nov. 15, 1979, 2946130

Int. Cl.³ A62B *35/02;* **B65H** *75/48*

U.S. Cl. 242—107 **31 Claims**

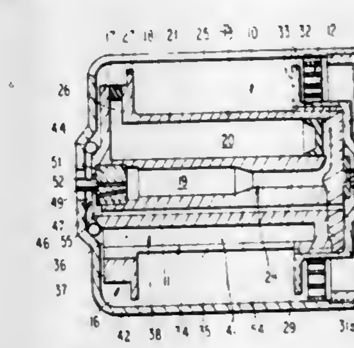

1. A windup means for a belt of a safety belt system for passenger motor vehicles for eliminating a slack in the belt upon a vehicle exceeding a predetermined deceleration, the windup means includes a belt roll-up mechanism comprising a shaft means, a retractor means constantly effectively acting upon the shaft means, a windup reel means connected to said shaft means, a pulley means adapted to be coupled with the shaft means at least upon a predetermined vehicle deceleration so as to eliminate the slack in the belt, and an ignitible propellant charge means for propelling a driving fluid so as to enable the windup means to eliminate the slack in the belt, characterized in that recess means are provided in an interior of the shaft

means for mounting the belt to the shaft means, the recess means include a longitudinally extending belt passage slot provided in the interior of the shaft means, a plurality of duct means filled with the driving fluid are arranged in the interior of the shaft means, the duct means terminate in openings at an end face of the shaft means, means are provided for communicating the duct means with the propellant charge means so as to enable the propellant charge means to act upon the driving fluid after an ignition of the propellant charge means, and in that means are provided for communicating the duct means with the pulley means whereby the driving fluid operates the pulley means to eliminate the slack in the belt upon ignition of the propellant charge means.

4,371,126
WEBBING LOCK DEVICE
Hiroshi Tsuge, Chiryu; Takashi Kawaharazaki, Toyoake, and Jun Yasumatsu, Toyota, all of Japan, assignors to Toyota Jidosha Kogyo Kabushiki Kaisha and Kabushiki-Kaisha Tokairika-Denki-Seisakusho, both of Tokyo, Japan
Filed Sep. 16, 1980, Ser. No. 187,814
Claims priority, application Japan, Oct. 4, 1979, 54-138276[U]
Int. Cl.³ A62B *35/08;* **B65H** *75/48*
U.S. Cl. 242—107.2 **10 Claims**

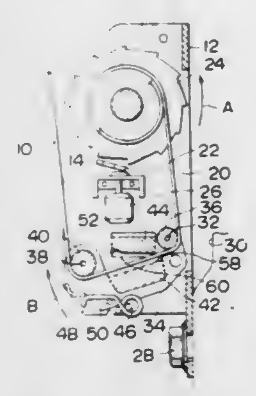

10. A webbing lock device for clamping and locking the intermediate portion of an occupant restraining webbing to positively restrain an occupant in an emergency of a vehicle, comprising:
(a) a frame solidly secured to the body of the vehicle;
(b) a takeup shaft journalled on said frame for winding thereon one end of the occupant restraining webbing by its biasing force, the other end of said webbing being connected to an occupant-restraining portion;
(c) acceleration detecting and operating means interposed between said takeup shaft and said frame for stopping the webbing wind-out rotation of the takeup shaft in an emergency of the vehicle;
(d) a stationary lock member solidly secured to said frame, one surface of which is formed into a first webbing clamping surface;
(e) a lock lever journalled on said frame and provided at a portion thereof with a movable lock member, one surface of said lock member being formed into a second webbing clamping surface;
(f) a guide member provided at the forward end of said lock member, on which the intermediate portion of the webbing between the takeup shaft and the occupant-restraining portion is wound, whereby, when a tension in the webbing is increased, the lock lever is rotated to cause the movable lock member to approach the stationary lock member; and
(g) a surface of curvature formed on either said first webbing clamping surface or said second webbing clamping surface for progressively increasing the clamping gap from the takeup shaft side to the occupant-fastening side during clamping the webbing, whereby a sharp change in tension in the clamped webbing is avoided so as to prevent the webbing from being ruptured, said clamping surfaces being formed to clamp the webbing along a portion of the length of the webbing.

4,371,127
SEAT BELT LOCKING DEVICE
Toshiaki Shimogawa, Aichi; Takayuki Ando, Okazaki, and Satosi Kuwakado, Aichi, all of Japan, assignors to Nippon Soken, Inc., Nishio, Japan
Filed Feb. 27, 1981, Ser. No. 238,953
Claims priority, application Japan, Mar. 4, 1980, 55-27163
Int. Cl.³ A62B *35/02;* **B65H** *75/48*
U.S. Cl. 242—107.2 **7 Claims**

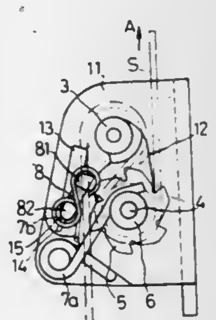

1. A seat belt locking device to be installed in a seat belt system of a vehicle together with an emergency lock retractor for locking a seat belt when a seat belt winding member of said emergency lock retractor is locked at an emergency time, comprising:
a first roller and a second roller along which said seat belt connected to said seat belt winding member of said emergency lock retractor is stretched;
said first roller being rotatably supported at a predetermined position by a fixed member of said vehicle;
said second roller being rotatably supported by said fixed member at a predetermined distance from said first roller in parallel therewith so as to be movable toward said first roller;
said seat belt being stretched through the space between said first roller and said second roller so that load is applied to said first roller and said second roller in the opposed directions to each other when said seat belt is tensioned;
a roller locking means which is provided between said fixed member and said second roller for locking said second roller when said second roller moves toward said first roller due to the load of said seat belt to strongly catch said seat belt between said first roller and said second roller at an emergency time; and
a load limiting means which is provided in said roller locking means for unlocking said locking means when load applied to said seat belt reaches a predetermined value to prevent said seat belt from being broken.

4,371,128
SEAT BELT RETRACTOR ASSEMBLY WITH PAWL MOUNTED PENDULUM
Akira Tanaka, Northridge, Calif., assignor to American Safety Equipment Corp., New York, N.Y.
Filed Oct. 6, 1980, Ser. No. 193,958
Int. Cl.³ A62B *35/02;* **B65H** *75/48*
U.S. Cl. 242—107.4 A **15 Claims**

1. In an emergency locking seat belt retractor mechanism including a belt winding spool, at least one spool associated ratchet member having a plurality of ratchet teeth, locking pawl means mounted for engaging the ratchet teeth of said ratchet member on actuation thereof, and an improved emergency responsive means for automatically actuating said locking pawl means to lock said spool via said ratchet member comprising:

an inertia responsive mass mounted upon said locking pawl means;
said locking pawl means having one end thereof provided with one or more slots for forming an end tab;
said end tab having an aperture therein for mounting said inertia mass, and said end tab offset from said locking pawl means within said belt retractor mechanism parallel to the horizontal for mounting said inertia mass vertically thereto;
a second pawl slidably mounted upon said locking pawl means for automatic actuation by said inertia responsive mass in response to an emergency;

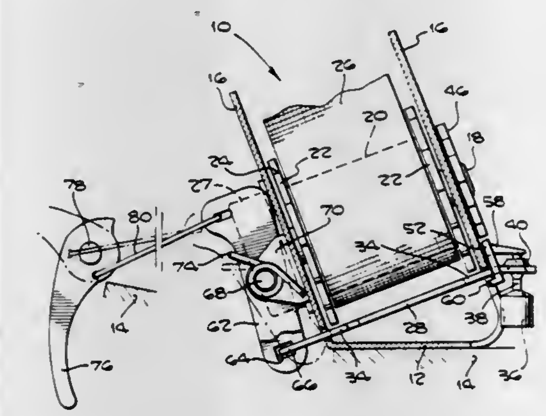

said second pawl configured to slide into said one or more slots within said locking pawl means for slidably mounting thereon;
a second ratchet member having a plurality of ratchet teeth mounted upon said spool which engages said second pawl when said second pawl is actuated by said inertia responsive mass; and
means on said second pawl to engage said first mentioned locking pawl means and draw said first locking pawl means into engagement with said first mentioned ratchet teeth thereby locking said spool.

4,371,129
BOBBIN FOR USE IN PRODUCING A MESOPHASE PITCH DERIVED CARBON YARN
David A. Schulz, Fairview Park, Ohio, assignor to Union Carbide Corporation, Danbury, Conn.
Filed Dec. 17, 1980, Ser. No. 217,439
Int. Cl.³ B65H *75/12, 75/14*
U.S. Cl. 242—118.7 **5 Claims**

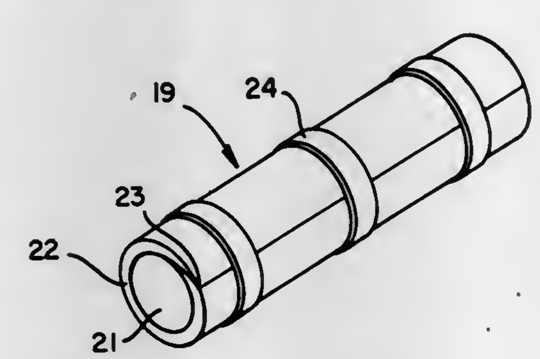

1. A bobbin capable of retaining thermoset yarn during a heat treatment to pyrolyze and carbonize the thermoset yarn to produce a good quality carbon yarn, comprising a cylindrical body made of a material selected from the group consisting of stainless steel, refractory compounds and alloys, and graphite; and a layer of compressible resilient carbon material positioned on the outside surface of said cylindrical body to receive said thermoset yarn and to minimize stress between said cylindrical body and said thermoset yarn during said heat treatment.

4,371,130
YARN TUBE WITH UNIVERSAL PICKUP GROOVE
Manson D. Case, Hartsville, S.C., assignor to Sonoco Products Company, Hartsville, S.C.
Filed Jan. 13, 1981, Ser. No. 224,674
Int. Cl.³ B65H *75/28*
U.S. Cl. 242—125.1 **7 Claims**

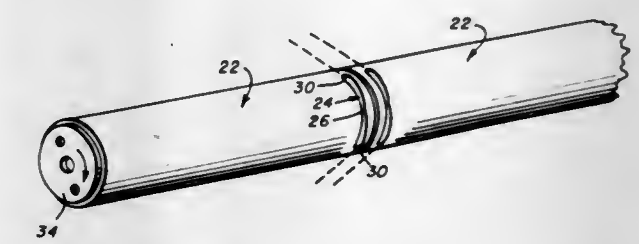

1. A yarn tube specifically adapted for rotation in opposed directions and yarn pickup in each opposed direction of rotation; said tube being elongated and having an outer yarn receiving surface, a pickup groove in said tube transverse to the length thereof and through said outer surface, said groove extending continuously about at least a substantial portion of the circumstance of the tube and having enlarged end sections, said groove further including a center section between and common to said end sections, said end sections each being of a greater width than said center section, the width of each groove end section increasing outward from the center section, thereby defining maximum width drop-in areas at the end sections of the groove in conjunction with a central narrow width gripping area for the gripping accommodation of the yarn moving inwardly, in either of the opposed directions of rotation, from either wide drop-in area to the narrow gripping area.

4,371,131
MAGNETIC TAPE CASSETTE
Masatohsi Okamura, and Kimio Tanaka, both of Tokyo, Japan, assignors to TDK Electronics Co., Ltd., Tokyo, Japan
Filed Nov. 26, 1980, Ser. No. 210,802
Claims priority, application Japan, Jan. 14, 1980, 55-3244
Int. Cl.³ G03B *1/04;* **B23P** *21/00*
U.S. Cl. 242—199 **1 Claim**

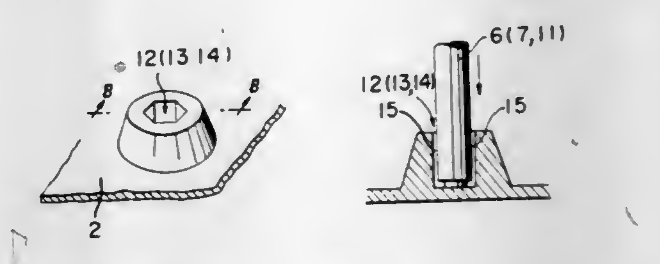

1. A magnetic tape cassette comprising:
a cassette casing defining at least one internal boss, each said boss having a recess defining recess walls;
a tape guide pole forcibly insertable into each said recess; and
means for releasing air during the forcible insertion of each said pole in each said recess, said means for releasing including a circular cross section for at least the portion of each said pole which is insertable in said recess, and a polygonal cross section for at least a portion of said walls of each said recess,
wherein the flat surfaces of said walls of each said polygonally shaped recess forcibly grip each said pole and the intersections of said flat surfaces permit air to escape.

4,371,132
REVERSIBLE THRUST DUCTED FAN PROPULSION UNIT
Clifford S. Woodward, Bristol, England, assignor to Rolls Royce Limited, London, England
Filed Jan. 12, 1981, Ser. No. 224,016
Claims priority, application United Kingdom, Jan. 11, 1980, 8000615
Int. Cl.³ F02K *3/06*
U.S. Cl. 244—53 B **3 Claims**

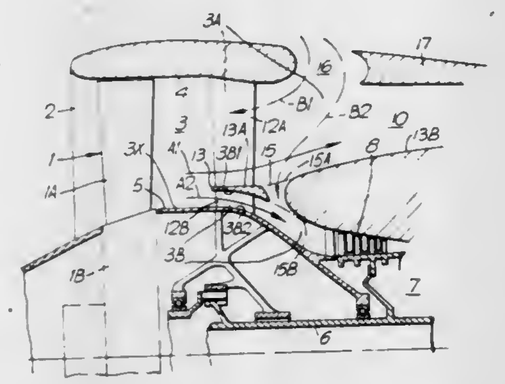

1. A ducted fan propulsion unit for aircraft comprising an annular main duct, a fan contained within the main duct and having blades the pitch of which is reversible, a first opening defined in the duct forward of the fan, an annular flow splitter situated rearward of the fan and dividing the main duct into radially outer and inner branch ducts, a passage extending radially through the splitter to connect the branch ducts, outer stator vanes provided in the outer branch duct forward of said passage, inner stator vanes provided in the inner branch duct forward of said passage, a second opening defined in the outer branch duct rearward of the stator vanes therein, wherein the part of the inner branch duct lying forward of the passage is defined by radially outer and inner surfaces configured so there is a progressively rearwardly reducing diameter of said inner duct, and wherein the part of the inner duct rearward of said passage is defined by outer and inner surfaces configured so there is a progressively rearwardly reducing diameter and leading to a compressor of a gas turbine engine for driving the fan, said radially outer surface of said inner duct forward of said passage being shaped so as to urge the air flow in said inner duct in a radially inward direction.

4,371,133
DUCTED PROPELLER AIRCRAFT
John K. Edgley, Elsworth, England, assignor to Edgley Aircraft Limited, Cambridgeshire, England
Filed Apr. 30, 1980, Ser. No. 145,341
Claims priority, application United Kingdom, May 1, 1979, 7915156
Int. Cl.³ B64D *27/02;* **B64C** *3/32*
U.S. Cl. 244—54 **16 Claims**

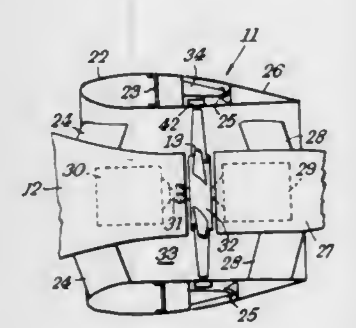

1. An aircraft having lift-producing means comprising a mainplane, a prime mover, a propeller with a hub operatively driven by the prime mover in use to produce by movement through the ambient air sufficient thrust for flight of the aircraft, the propeller being located intermediate the port and starboard ends of the mainplane, and an annular shroud including a mainplane support portion, the shroud comprising:

(i) a duct surrounding the propeller defining an upstream end so located relative to the lift producing means that it is unimpinged or substantially upimpinged upon by any portion of the turbulent airflow emanating from the lift producing means;

(ii) said mainplane support portion of said shroud being the or a primary load path along which torsional and bending stresses to which the mainplane is subject in use are passed between the portion of the mainplane to the port side of the shroud and the portion of the mainplane to the starboard side of the shroud;

(iii) said shroud including a trailing portion within which the propeller rotates;

(iv) said propeller being mounted to the prime mover, and the prime mover being fixedly mounted to the trailing portion of the shroud, so that the propeller is held substantially fixed against transverse movement relative to the longitudinal axis of the trailing portion of the shroud; and

(v) said trailing portion of the shroud being mounted to the mainplane support portion of the shroud by resilient mounting blocks which serve to isolate vibrations of the prime mover in directions transverse to the longitudinal axis of the aircraft in the trailing portion from the mainplane support portion of the shroud.

4,371,134
ARTIFICIAL SATELLITE ARRANGEMENT WITH UNFOLDABLE SOLAR GENERATORS AND ANTENNAS
Georges Marello, and Jean-Claude Vermalle, both of Mandelieu, France, assignors to Societe Nationale Industrielle Aerospatiale, Paris, France
Filed Dec. 18, 1980, Ser. No. 217,662
Claims priority, application France, Jan. 4, 1980, 80 00109
Int. Cl.³ B64G *1/30*
U.S. Cl. 244—173 **4 Claims**

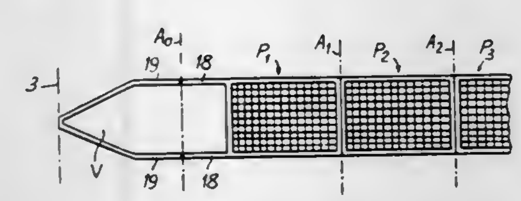

1. In an artificial satellite arrangement comprising a satellite body, at least one solar generator comprising an assembly of panels bearing solar cells and articulated on one another in succession to occupy either a folded position in which said panels are folded on one another in zig-zag form, or an unfolded position in which said panels are at least substantially in line with one another and project outwardly from said body, a flap having one end articulated to said body and the other end articulated to a proximal panel in said assembly of panels, and at least one antenna articulated on said body to occupy either an unfolded position in which said antenna is located laterally away from said body or a folded position in which said antenna is located directly above said body and said assembly of panels, when said assembly is folded,

the improvement comprising:

lateral extensions rigidly affixed to and projecting from each of said flap and said proximal panel and articulation means interconnecting the free ends of said extensions, said extensions projecting toward said folded antenna when said assembly of panels is folded, said extensions being laterally spaced by a distance sufficient to clear said folded antenna.

4,371,135
SOLAR ARRAY SPACECRAFT REFLECTOR
John E. Keigler, Princeton, N.J., assignor to RCA Corporation, New York, N.Y.
Continuation of Ser. No. 61,866, Jul. 30, 1979, abandoned. This application Jan. 26, 1981, Ser. No. 228,576
Int. Cl.³ B64G *1/00, 1/44*
U.S. Cl. 244—173 **8 Claims**

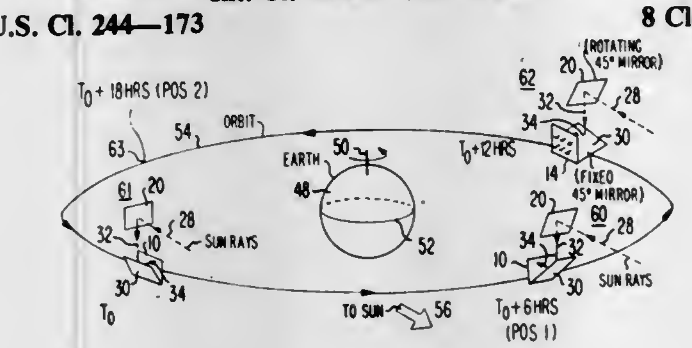

8. A solar converter system for use in a satellite in space in synchronous orbit about a rotating planet such that one surface of a satellite continuously faces the planet, comprising in combination:

a panel member mounted to said one surface of said satellite and including energy converter means having solar cells on a first flat surface and an antenna array on the opposite surface, where said opposite surface and said antenna array continuously face said planet;

a first mirror in fixed relation to the member, having a reflecting surface facing the first surface and being at an acute fixed angle thereto;

a second mirror, this one rotatable about an axis such that the reflecting surface of the second mirror always faces the reflecting surface of first mirror regardless of the position of the second mirror on its axis; and

means for rotating the second mirror about its axis and relative to said first mirror as the satellite orbits the planet, in such a way that the reflecting surface of the second mirror continuously faces the sun and directs the sun's rays onto the reflecting surface of the first mirror, the latter reflecting these rays onto the first surface of the first member.

4,371,136
PRODUCT LOADING ARM STORAGE KEEPER
Roger D. Clay, Bartlesville, Okla., assignor to Phillips Petroleum Company, Bartlesville, Okla.
Filed Nov. 24, 1980, Ser. No. 209,927
Int. Cl.³ F16L *3/00*
U.S. Cl. 248—49 **9 Claims**

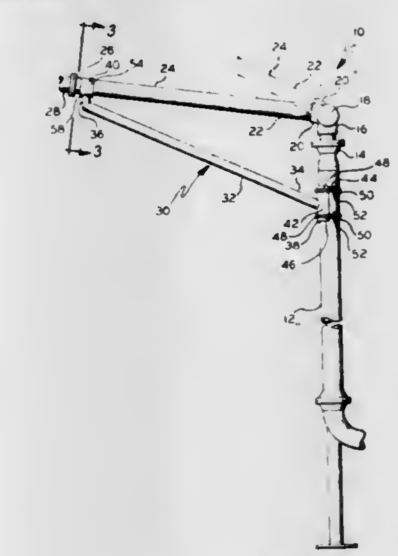

1. A loading arm keeper for use with a loading arm assembly including first and second tubular portions connected by a tubular swivel, comprising:

a rigid arm having first and second end portions;

clamp means on the first end portion of said rigid arm for securing the first end portion of said rigid arm to said first tubular portion of said loading arm assembly; and

loading arm retainer means on the second end portion of said rigid arm for selectively engaging said second tubular portion of said loading arm assembly so as to restrict movement of said second tubular portion of said loading arm assembly relative to said first tubular portion of said loading arm assembly via said tubular swivel, said loading arm retainer means comprising a generally U-shaped saddle member fixedly secured to the second end portion of said rigid arm and sized and shaped to generally conform to the outer surface of said second tubular portions of said loading arm assembly.

4,371,137
WIRE BUNDLE CLAMP
Bernard Anscher, 21 Elm St., Woodbury, N.Y. 11797
Filed Mar. 26, 1981, Ser. No. 247,838
Int. Cl.³ F16L *3/08*
U.S. Cl. 248—73 **11 Claims**

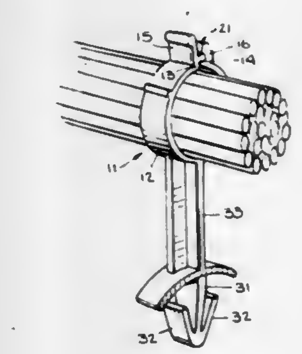

1. A wire bundle clamp comprising: a flexible band and a snap-locking means, the complementary component members of which are disposed on the ends of said flexible band; said flexible band having a natural curvature defining a band enclosure and serving to place the complementary component members of said snap-locking means in a juxtaposed alignment which defines therebetween an annular opening for the insertion of axially aligned workpieces, whereby a pinching action imposed on the ends of said flexible band in the proximate area of the complementary component members of said snap-locking means will drive said snap-locking means members along arcuate paths adapted to bring them into touching engagement and locking alignment from which position the application of a sufficient pinching force to overcome the natural resistance of said snap-locking means will drive the complementary component members of the snap-locking means into locking engagement; said flexible band having finger-grip tabs, each said tab extending from the outwardly disposed surface of said flexible band in the proximate location of the snap-locking means component members, whereby a pinching action may be conveniently and easily imposed on said finger-grip tabs, thereby serving to captively drive the complementary component members of said snap-locking means into snap-locking engagement, said finger-grip tabs being aligned and adapted to permit the easy opening of said wire bundle clamp from its locked position by the insertion, between said finger-grip tabs, of an object, sized and configured to exceed at a point along its inserted length, as orientated during insertion or as reorientated subsequent to insertion, the natural separation of said finger-grip tabs on the locked wire bundle clamp, whereby the insertion or reorientation after insertion of said object will impart through said finger-grip tabs a disengaging force upon said snap-locking means, which force will overcome the natural resistance of said snap-locking means causing it to snappingly unlock.

4,371,138

DEVICE FOR MOUNTING EQUIPMENT IN VEHICLES

Herbert B. Roberts, 219 Glen Cove Dr., Chesterfield, Mo. 63017

Filed Dec. 3, 1979, Ser. No. 99,493

Int. Cl.³ F16M *11/00*

U.S. Cl. 248—201 **3 Claims**

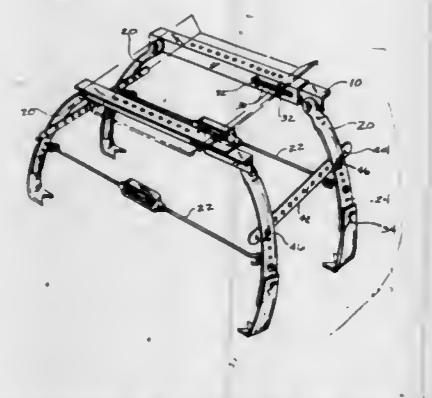

1. A device suitable for mounting equipment such as citizen band transceivers, stero components and the like about the transmission housing hump in the front portion of rear drive vehicles comprised of:

(1) at least two horizontal transverse mounting brackets comprised of over-lapping right angle structures with matching openings therein,

(2) legs mounted on opposite ends of said transverse mounting brackets and in hinged relation therewith,

(3) means for tightening said legs into abutting relationship with said transmission housing hump, and,

(4) means for mounting said portable equipment on said transverse mounting brackets.

4,371,139

ADJUSTABLE MOUNTING RACK FOR SOLAR COLLECTORS

Peter D. Clark, East Berlin, Conn., assignor to Sunsearch, Inc., Guilford, Conn.

Filed Dec. 31, 1979, Ser. No. 108,942

Int. Cl.³ A47G *29/02;* **E04G** *3/08;* **E06G** *7/28*

U.S. Cl. 248—237 **10 Claims**

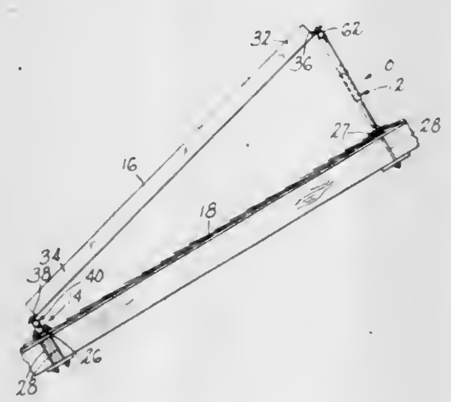

1. In combination with a solar collector and a support surface therefor, a rack for mounting the collector at an angle to the horizontal to receive solar radiation, said rack comprising first and second independent support assemblies,

said first support assembly having a first pair of spaced apart leg members with a first support member extending between the upper ends thereof, said leg members having flange members rigidly connected on the lower ends thereof for attaching said leg members to the support surface essentially perpendicular thereto and in fixed relation therewith, said leg members including means for varying the length thereof,

said second support assembly comprising a second pair of spaced apart leg members with second elongated support member extending therebetween, flange members rigidly connected on the lower ends of said second leg members for attaching said second legs to the support surface essentially perpendicular to the support surface and in fixed relation therewith,

said first and second support assemblies, being spaced apart with said support members in essentially parallel relationship, and means secured to said collector adjacent opposite ends thereof and rotatably connected to each of said support members.

4,371,140

BUOYANT SOAP HOLDER

Nikalous von Obstfelder, 9 Langton Rd., Tunbridge Wells, Kent, England

Filed Jan. 2, 1981, Ser. No. 222,211

Int. Cl.³ A47B *91/00*

U.S. Cl. 248—359 **4 Claims**

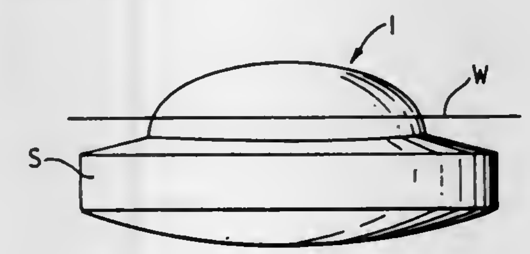

1. A buoyant support for a bar of soap, comprising a generally dome shaped upper wall member having an internal projecting spigot, a separate lower wall member having an internal projecting lower wall spigot and being engaged with said upper wall member with said spigot interfitting with said lower wall spigot and defining an air chamber between said upper wall member and said lower wall member with sufficient volume to render buoyant a bar of soap, said lower wall member being shaped to conform to the surface of the bar of soap and having teeth-like formations projecting from said lower wall member engageable into the bar of soap, said lower wall member including an integral hollow projection capable of being embedded in the soap, said teeth-like formations being arranged in a row adjacent the edge of said lower wall member and encircling said hollow projection, said upper wall member being shaped to represent an object, said upper wall member having a peripheral wall, and a box having a peripheral wall adapted to support and interlock with said peripheral wall of said upper wall portion and to accommodate a bar of soap.

4,371,141

VIBRATION ISOLATION SYSTEM WITH ADJUSTABLE CONSTANT FORCE, ALL-DIRECTIONAL, ATTENUATING SEISMIC RESTRAINT

Paul Baratoff, Jackson Heights, N.Y., assignor to Korfund Dynamics Corporation, Westbury, N.Y.

Filed Sep. 24, 1980, Ser. No. 190,241

Int. Cl.³ F16M *13/00*

U.S. Cl. 248—569 **11 Claims**

1. A vibration isolation system for mounting a unit on a support including a plurality of vibration isolators interposed between the unit and the support and at least one seismic restraint assembly interposed between the unit and the support characterized in that the seismic restraint assembly includes a vertical frame attached to one of the unit and the support, vertical guide bearings on the vertical frame, a vertical damper element received to move vertically in the vertical guide bearings, at least one vertical friction element carried by the vertical frame, at least one resilient device holding the friction element in engagement with the vertical damper element to generate a predetermined vertical frictional restraining force acting therebetween that is substantially less than the maximum vertical input force of a seismic event, a horizontal damper element coupled to the vertical damper element for vertical and horizontal movements relative thereto corresponding to selected normally expected movements of the unit, relative to the support, on the isolators but engageable with the vertical damper element upon greater than the selected movements, a horizontal frame connected to the other of the unit and the support, horizontal guide bearings on the horizontal frame guiding the horizontal damper element for horizontal movement relative thereto at least one horizontal friction element carried by the horizontal frame, at least one other resilient device holding the horizontal friction element in en-

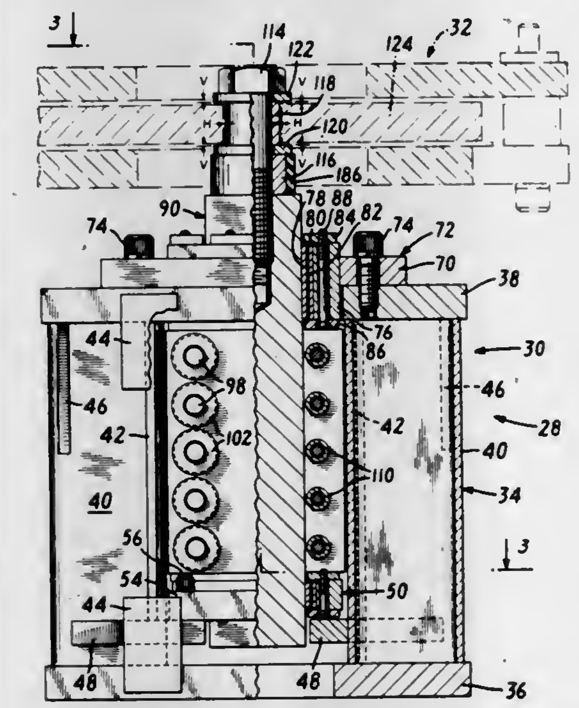

gagement with the horizontal damper element to generate predetermined horizontal frictional restraining forces acting therebetween that are substantially less than the maximum horizontal input force of a seismic event, and vertical and horizontal stops for limiting the total relative displacement of the unit, resulting from a seismic event, whereby the friction elements limit the vertical and horizontal forces transmitted from the support to the unit to values substantially less than the maximum input forces.

4,371,142

ROCKING CHAIR

Donald L. Bottemiller, and John K. Miles, both of Wadena, Minn., assignors to Homecrest Industries Incorporated, Wadena, Minn.

Continuation-in-part of Ser. No. 907,810, May 19, 1978, abandoned. This application Jun. 30, 1980, Ser. No. 164,824

Int. Cl.³ F16M *13/00*

U.S. Cl. 248—573 **8 Claims**

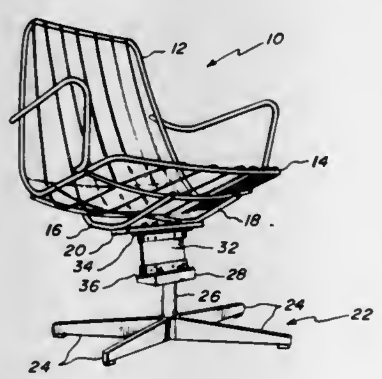

1. A rocking chair comprising:

a chair base;

a chair;

flexible plastic sheet means connected between the chair base and the chair for supporting the chair and its occupant and permitting rocking of the chair with respect to the base in a plane essentially normal to a major surface of the flexible sheet means by flexing of the flexible plastic sheet means;

first mounting means for connecting one end of the flexible sheet means to the chair base;

second mounting means for connecting an opposite end of the flexible sheet means to the chair, the flexible sheet means extending generally upwardly from the first mounting means to the second mounting means at a slight inclination rearwardly from a vertical position so that the chair and its occupant apply a primarily compressive load to the flexible plastic sheet means, and

stop means comprising cooperating elements on said first and second mounting means, at least one of said elements extending towards the other, said elements normally being spaced but engaging each other when said chair is rocking rearwardly to stop further flexure of the flexible sheet means and thus to prevent the chair and its occupant from achieving a position which would cause tipping of the chair base rearwardly.

4,371,143

EARTHQUAKE ISOLATION FLOOR

Jiro Ishida, Kamagaya, Japan, and Takafumi Fujita, 1-8-2-207, Saiwai-cho, City of Chiba, Chiba Prefecture, Japan, assignors to Mitsubishi Steel Mfg. Co., Ltd., Tokyo and Takafumi Fujita, Chiba, both of, Japan

Filed Oct. 23, 1980, Ser. No. 199,981

Claims priority, application Japan, May 24, 1980, 55-69196; Jun. 5, 1980, 55-74984

Int. Cl.³ F16M *1/00*

U.S. Cl. 248—638 **26 Claims**

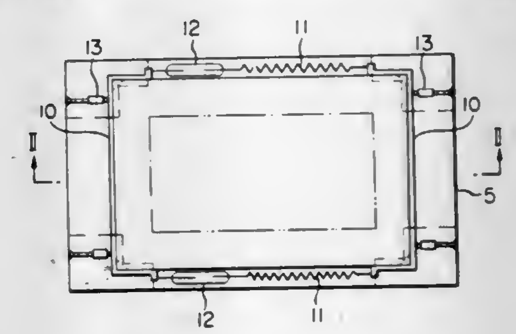

1. An earthquake isolation floor comprising a stationary horizontal fundamental frame having a substantially polygon configuration in plane view, a movable horizontal support frame having a similar configuration to that of said fundamental frame, but smaller in dimensions than that of said fundamental frame, and slidably mounted thereon, said support frame has a substantially rectangular configuration in plane view, horizontal tensile springs disposed between said fundamental and support frames each in a prestressed condition such that when said support frame is moved relative to said fundamental due to the onset of an earthquake, said springs are caused to be elongated by the fact that one end of said springs does not encounter any resistance to the movement thereof, while the other end opposite to the movement is prevented from moving, a pair of spring-mounting brackets being respectively arranged along one pair of the confronting sides of said support frame on said fundamental frame so as to have each end of said bracket somewhat projected beyond said sides, whereby the confronting ends of said spring-mounting bracket are connected together by said horizontal tensile springs respectively disposed along the other pair of the confronting sides of said support frame, and stopping means are provided on said fundamental frame as the normal position of said support frame such that, when said support frame is moved in the direction of said horizontal tensile springs, one of said spring-mounting brackets arranged in said direction can be moved in accompaniment with said support frame, while the other of said spring-mounting brackets arranged opposite to said direction is prevented from moving by said stopping means.

4,371,144

MOTOR SECURING DEVICE FOR WATERCRAFT

Harry H. Godlewski, 5454 California Ave., Bethel Park, Pa. 15102

Filed Apr. 10, 1981, Ser. No. 252,956

Int. Cl.³ B63B *7/08*

U.S. Cl. 248—641 15 Claims

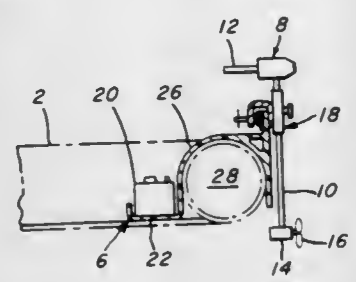

1. A motor securing device for watercraft comprising generally downwardly open securing means for securing said device to said watercraft,

motor attachment means projecting generally upwardly from a rear portion of said securing means,

said securing means having a channel for receipt of a portion of said watercraft,

a battery securing shelf connected to and extending forwardly from said securing means, whereby a motor secured to said motor attachment means and a battery disposed on said shelf will provide a counterbalancing action and,

retainer means for resisting undesired displacement of a battery disposed on said shelf.

4,371,145

INJECTION MOLD FOR COAXIAL CABLE JOINTING

Stuart R. Barnes, London, England, assignor to International Standard Electric Corporation, New York, N.Y.

Filed Oct. 1, 1981, Ser. No. 307,464

Claims priority, application United Kingdom, Oct. 14, 1980, 8033084

Int. Cl.³ B29C *6/00;* **B29F** *1/00*

U.S. Cl. 249—80 6 Claims

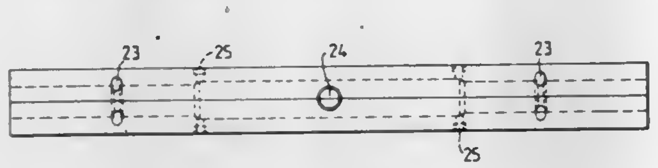

1. An injection mold for coaxial cable joints comprising:

an outer elongate mold portion having a longitudinal split,

an inner elongate mold portion disposed in said outer portion and having a higher coefficient of thermal expansion than said outer portion, said inner portion having a longitudinal split,

said outer portion having a longitudinal split and locking means for assembly around said inner portion,

heating and cooling channels located in said outer portion, and

cooperating filler holes disposed in said inner and outer portions.

4,371,146

BALL VALVE

Hisayoshi Mese, Taishibashi, and Shigeo Kanaya, Suita, both of Japan, assignors to Fuji Metal Mfg. Co., Ltd., Osaka, Japan

Filed Mar. 25, 1981, Ser. No. 247,396

Claims priority, application Japan, Mar. 25, 1980, 55-38497

Int. Cl.³ F16K *5/10, 47/04*

U.S. Cl. 251—209 5 Claims

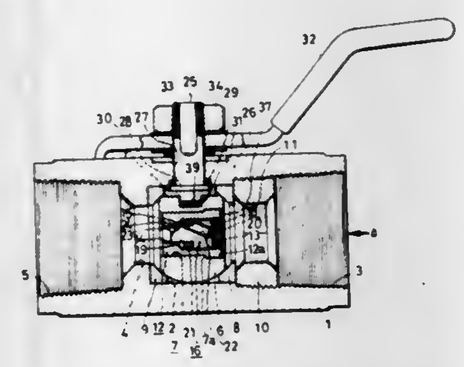

1. A ball valve, comprising a valve case forming an internal space that is centrally extending to opposite inlet and outlet sides, a ball valve element disposed within the interior space and having a bore extending therethrough, a valve seat rotatably supporting the ball valve element, a valve stem fixed to one side of the ball valve element and having an operating lever at one end of the valve stem projecting therefrom outside the valve case, and a flow adjusting internal valve assembly means provided in the bore, comprising an internal cylindrical valve casing in the bore and having an internal valve seat portion, and an axially movable internal valve element disposed within the internal cylindrical valve casing, wherein the internal cylindrical valve casing comprises an internally threaded large-diameter portion at its inlet side, a small-diameter guide bore portion at its outlet side and an intermediate portion positioned therebetween and having a tapered inner surface providing the internal valve seat portion, and the internal valve element comprises an externally threaded head screwed in the internally threaded portion and a cylindrical leg extending from one end of the head toward the outlet side and inserted into the guide bore portion, the head being formed with a slanting fluid channel, the leg having a slanting surface opposed to the internal valve seat portion.

4,371,147

VEHICLE MOUNTABLE CABLE REEL APPARATUS

Lance D. Ridgway, Carlsbad, N. Mex., assignor to Hy-Reel Machinery, Inc., Carlsbad, N. Mex.

Filed Mar. 26, 1980, Ser. No. 134,236

Int. Cl.³ B66D *1/38, 3/02*

U.S. Cl. 254—326 27 Claims

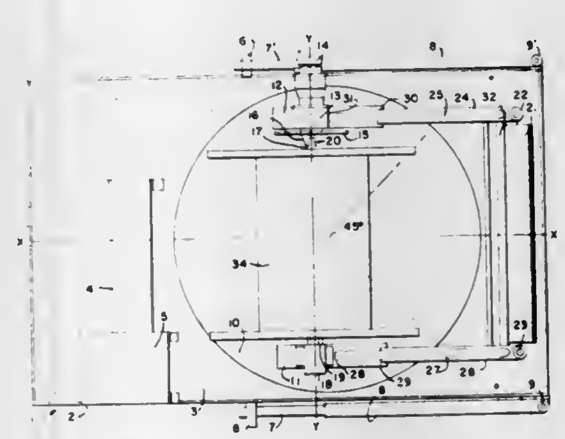

5. A vehicle mountable hydraulic cable reel apparatus comprising:

a cable reel bed comprising bed frame members;

a turntable mounted on the bed frame members;

a turntable operating motor mounted on the bed, and means connecting said motor to the turntable to turn the turntable;

first and second vertical stanchions mounted on said turntable;

a tail stock assembly, and means connecting said tail stock assembly to said first vertical stanchion;

a shaft bearing assembly, and means connecting said bearing assembly to the second vertical stanchion;

a reel motor, and means connecting said reel motor to the shaft bearing assembly, whereby a cable reel supported between the tail stock assembly and the bearing assembly may be driven by the reel motor;

a horizontal cable roller with vertical guide rollers disposed at a first end and second end of said horizontal cable roller with parallel truss means connecting said horizontal cable roller to said first and second vertical stanchions;

and pivot means connected to the frame members, outrigger means connected to the pivot means and means for locking the outrigger means at an angle to the frame members, cable guiding means connected to a distal end of the outrigger means for guiding a cable passing through the guiding means from the cable reel via the cable roller.

4,371,148

PIVOTAL CONNECTION FOR ENCLOSURE SECTIONS

Richard L. Harden, R.R. 1, Lineville, Iowa 50147

Division of Ser. No. 118,912, Feb. 6, 1980, abandoned, which is a continuation-in-part of Ser. No. 845,872, Oct. 27, 1977, Pat. No. 4,193,378, which is a continuation of Ser. No. 709,862, Jul. 29, 1976, Pat. No. 4,089,301. This application Dec. 15, 1980, Ser. No. 216,205

Int. Cl.³ E04H *17/16*

U.S. Cl. 256—26 2 Claims

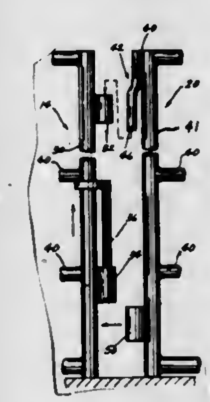

1. An enclosure comprising,

a plurality of pivotally interconnected, detachable sections,

a pair of vertically spaced apart hinges interconnecting adjacent sections,

one of said hinges including a rigid vertically nonmovable downwardly extending pin secured at its upper end to one of said sections and having a lower free end, and a vertically disposed sleeve on the adjacent section to receive the free end of said pin;

the other of said hinges including vertically disposed and aligned sleeves with the sleeve on one section being below the sleeve on the other section, and a vertically movable pin received in both of said aligned sleeves; and

said sleeves of said other hinge functioning as cooperating stop means to limit relative vertical movement when in a common vertical plane with said sections interconnected and to allow relative vertical movement when said sections are displaced laterally relative to each other, whereby said one section having said downwardly extending pin may be raised relative to said other section to allow said downwardly extending pin to enter said sleeve of said one hinge and then be lowered and moved into vertical alignment with said other section such that said movable pin of said other hinge may be lowered through said sleeve on said other section and into said sleeve on said one section to complete the pivotal locking engagement between adjacent sections.

4,371,149

APPARATUS FOR COOLING SHEET STEEL BY WATER SPRAYING

Osamu Takeuchi, Mitaka; Haruo Kokubun, Yokosuka; Hisashi Yoshinaga, Osaka; Shuichi Hara, Izumisano, and Hiromichi Ban, Osaka, all of Japan, assignors to Ishikawajima-Harima Jukogyo Kabushiki Kaisha, Tokyo and Sumitomo Metal Industries, Ltd., Osaka, both of, Japan

Filed Jul. 21, 1980, Ser. No. 169,508

Claims priority, application Japan, Nov. 9, 1979, 54-145098

Int. Cl.³ C21D *11/00*

U.S. Cl. 266—90 6 Claims

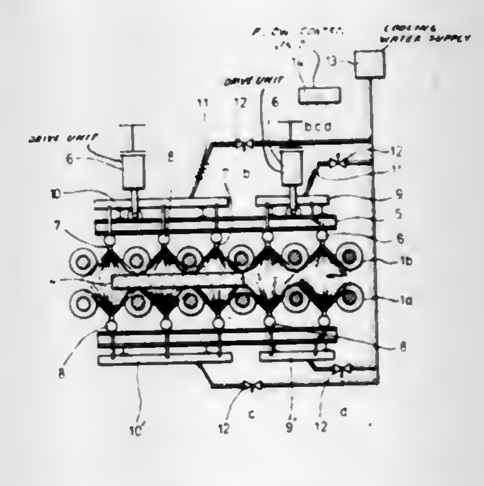

1. An apparatus for cooling sheet steel by water spraying comprising

(a) a lower wheel conveyor section,

(b) an upper wheel conveyor section dispoed above said lower wheel conveyor section in symmetrical relationship therewith so as to define a path of travel therebetween of a sheet of steel to be cooled,

(c) a reversible drive unit drivingly coupled to said lower wheel conveyor section so that said sheet of steel placed thereon may be reciprocated lengthwise,

(d) lower and upper water spraying systems disposed immediately below and above said lower and upper wheel conveyor sections, respectively, each of said lower and upper water spraying systems including an array of water spray nozzles directed toward said sheet of steel,

(e) each of said water spray nozzles being constructed whereby the cooling water fed into the inlet of the spray nozzle is divided into two flows or jets having different vectors, and said two flows or jets strike against each other just within the orifice of the spray nozzle, whereby the cooling water may be atomized or broken up into extremely fine droplets only under the pressure of the cooling water,

(f) each of said spray nozzles being provided with spray-direction control means which causes the associated spray nozzle to change the spray direction or the axis of said associated spray nozzle through a predetermined angle range in a plane widthwise and perpendicular to said sheet of steel on said lower wheel conveyor section in response to deformations of said sheet of steel,

(g) a vertical drive unit for moving said upper wheel conveyor section up and down in unison with said upper water spraying system,

(h) a cooling water supply system for supplying the cooling water under pressure to said array of spray nozzles in each of said lower and upper water spraying systems, the spray nozzles in each of said lower and upper water spraying systems being divided into at least two groups in the lengthwise direction of said apparatus, and

(i) flow control means for supplying cooling water to each of said groups of spray nozzles.

4,371,150
SINTERING PLANT
Toshio Tsukuda, Niihama, Japan, assignor to Sumitomo Heavy Industries, Inc., Tokyo, Japan
Filed Oct. 31, 1980, Ser. No. 202,717
Claims priority, application Japan, Nov. 2, 1979, 54-141192
Int. Cl.³ F27B *9/12*
U.S. Cl. 266—155 **3 Claims**

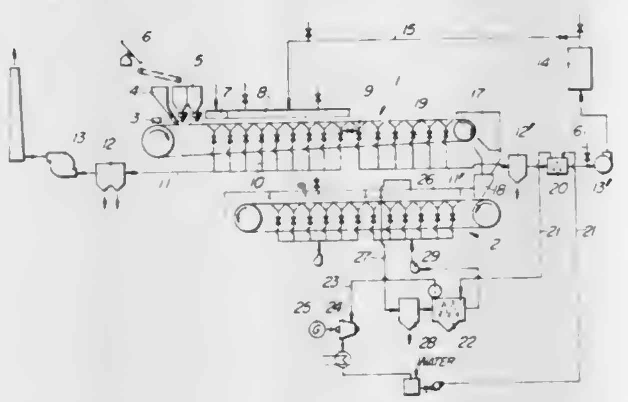

1. A sintering plant in combination with an energy recovery system wherein the sintering plant comprises:
a sintering machine having transport means for continuously transporting raw materials, and means for igniting the raw materials being transported, whereby the raw materials are sintered while being transported to a discharge end of the machine.
means for feeding quicklime to a lower layer of the raw materials fed on the transport means;
an array of wind boxes disposed below the transport means for sucking gases generated when the raw materials are sintered;
desulfurization means;
a first duct connected to an upstream half of the wind box array for discharging gases therefrom;
a second duct connected between a downstream half of the wind box array and the desulfurization means; and
means for removing heat from the finished sinter discharged from the sintering machine including a high temperature section and a low temperature section downstream thereof; and
the energy recovery system comprises;
a steam-producing boiler operatively associated with said means for removing heat, said boiler receiving heat therefrom;
heat exchanger means disposed in said second duct and connected to said boiler for preheating water fed to said boiler;
means for circulating cooling gases from said high temperature section to said boiler and back to said high temperature section;
means for utilizing steam produced in said boiler;
conduit means interconnecting a source of water, said heat exchanger means, said boiler and said utilizing means; and means for circulating water in said conduit means.

4,371,151
BLAST FURNACE SMELTING OF ZINC
Michael W. Gammon, Bristol, and John A. Clarke, Thornbury; both of England, assignors to Metallurgical Process Limited and I.S.C. Smelting Limited, both of Nassau, The Bahamas
Filed Aug. 1, 1978, Ser. No. 929,977
Claims priority, application United Kingdom, Sep. 15, 1977, 38512/77
Int. Cl.³ F27B *1/16*
U.S. Cl. 266—186 **8 Claims**

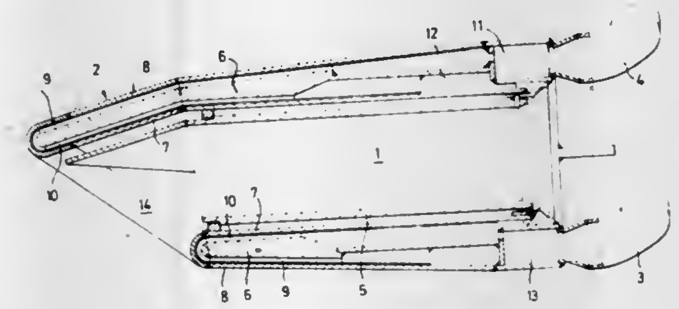

1. A tuyere for a blast furnace, the tuyere comprising a main body in the form of a tube with a central bore of substantially constant cross-section, and a nose portion having a hood-like extension of the upper wall only of the tube, said extension being downwardly inclined with respect to the longitudinal axis of said main body when the tuyere is installed in a furnace, whereby gas passing through the nose of the tuyere is deflected downwardly by said extension, which extension has a gas outlet aperture of greater area than said constant cross-sectional area of the bore of the tube.

4,371,152
BOX SPRING ASSEMBLY WITH IMPROVED SPRING INSTALLATION CAPABILITY
John P. Kitchen, Georgetown, Ky., and Jack C. Mandusky, Adrian, Mich., assignors to Hoover Universal, Inc., Saline, Mich.
Filed Jan. 25, 1980, Ser. No. 115,296
Int. Cl.³ A47C *25/00, 23/04;* **F16F** *3/00, 1/14*
U.S. Cl. 267—103 **5 Claims**

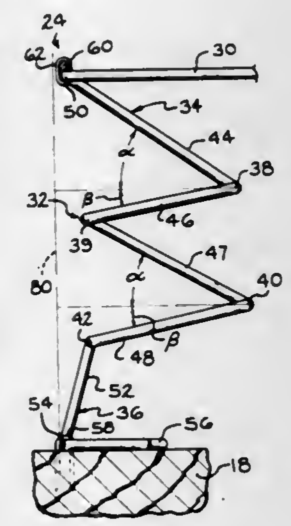

1. In a box spring assembly which includes a generally rectangular frame, a plurality of vertically deflectable wire springs mounted on said frame and connected to each other so as to yieldably resist downwardly directed bedding loads, each of said springs being formed of spring steel wire and having a generally horizontal body portion arranged above said frame and downwardly extending end portions, each of said end portions having an upper section and a lower section, said upper section comprising a plurality of substantially horizontal torsion bars and a plurality of angularly arranged connecting bars connected to and extending between said torsion bars, some of said torsion bars constituting inner torsion bars and others of said torsion bars constituting outer torsion bars, said inner torsion bars in each end portion being located in closer proximity to the other end portion of said spring than said outer torsion bars, said torsion bars being movable in response to torsional stressing thereof to enable downward yieldable collapsing deflection of said end portion, said lower section comprising a generally upright, upwardly and inwardly inclined column of wire, said column of wire terminating at the lower end thereof in a frame engaging torsion bar which constitutes an outer torsion bar and is spaced from the other end portion of said spring a distance at least as great as all of the other outer torsion bars in said one end portion, and connecting means securing said frame engaging torsion bar to said frame, said column of wire terminating at the upper end thereof at the lowermost of said outer torsion bars other than said frame engaging torsion bar, that connecting bar which connects such lowermost torsion bar to the immediately succeeding and lowermost, inner torsion bar being disposed at an inclination in the same upward and inward sense as said column of wire but more horizontal than said column of wire.

4,371,153
SINUOUS SPRING WITH DEPTH CONTROL
Daniel Krakauer, Great Neck, N.Y., assignor to Kay Springs, Inc., Syosset, N.Y.
Filed Oct. 2, 1980, Ser. No. 192,947
Int. Cl.³ F16F *3/02*
U.S. Cl. 267—105 **10 Claims**

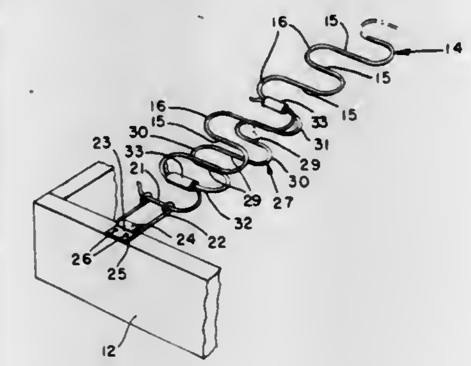

1. A sinuous spring structure for furniture seating frames having spaced-apart front and rear rails comprising a prestressed sinuous wire spring having linear cross-bars connected by semicircular loops, said prestressed sinuous spring having terminal cross-bar ends, one of said terminal cross-bar ends being connected to said front rail and the other terminal cross-bar end being connected to said rear rail with the sinuous spring having a mid-span with an upwardly arching free span between said rails in the spring unloaded condition, an auxiliary downwardly contoured prestressed sinuous reinforcing member connected to spaced selected cross-bars of said sinuous spring and eccentrically spaced from either terminal cross-bar and beneath said sinuous spring controlling the elongation and bending of the sinuous spring connected to said auxiliary reinforcing member under a loaded condition and sinuous spring deflection whereby increased depth of seating without objectionable bucketing occurs as modified by said auxiliary reinforcing member relative to an unreinforced sinuous wire spring.

4,371,154
SPRING ASSEMBLY AND METHOD FOR MANUFACTURE THEREOF
Paul H. Winbigler, Coldwater, Mich., assignor to Kuhlman Corporation, Troy, Mich.
Filed Dec. 31, 1981, Ser. No. 221,710
Int. Cl.³ F16F *1/12;* **B21F** *35/00;* **B23P** *13/00, 11/00*
U.S. Cl. 267—179 **10 Claims**

1. A method of attaching an expander cap to a helical coil spring comprising:
placing an expander cap on one end of a helical coil spring, said expander cap having a central opening defined by a plurality of tab portions spaced around the periphery thereof, said opening being positioned coaxially with the axis of said spring;
moving punch means through said opening from the side of said expander cap opposite said spring into said one end of said spring so as to deform said tab portions over the end coil of said spring, said punch means having a diameter larger than said central opening.

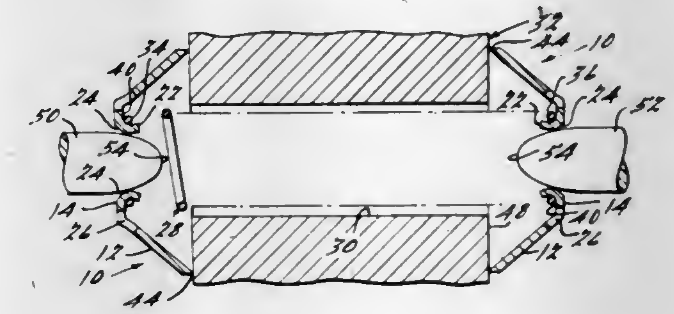

10. A spring expander cap assembly comprising a helical coil spring having end coils provided on opposite ends thereof, a pair of expander caps, each of said expander caps including a hollow generally frusto conically shaped skirt portion and a central opening therethrough, said opening being defined by a plurality of axially inwardly extending tab portions having slits therebetween, one of said expander caps being secured to each of said end coils by deforming said tab portions through the action of punch means being moved through said opening so as to cause each of said tab portions to fold over respective of said end coils.

4,371,155
APPARATUS FOR JOGGING A SHEAF OF PAPERS
Ulf J. E. Asterö, Tumba; Johan A. F. Dahlberg, Stockholm, and Kjell U. Aberg, Södertälje, all of Sweden, assignors to Asthausbolagen HB Astero & Stockhaus, Sweden
Filed Sep. 16, 1980, Ser. No. 187,724
Claims priority, application Sweden, Oct. 25, 1979, 7908860
Int. Cl.³ B42C *1/12;* **B65H** *31/40*
U.S. Cl. 270—53 **10 Claims**

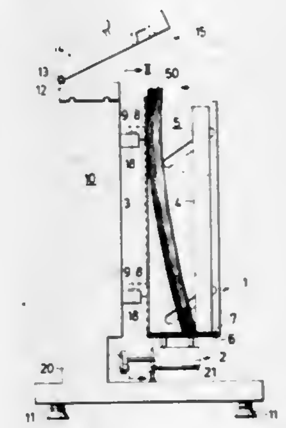

1. Apparatus for jogging a sheaf of papers for evening the edges of the sheaf, comprising:
a sheaf compartment including two substantially vertically oriented side walls, at least one end wall substantially vertically oriented and at right angles to the side walls and a bottom wall at right angles to said at least one end wall, wherein said compartment is adapted for carrying the sheaf with its edges lying substantially in the vertical plane, and wherein a high friction material covers the bottom wall of the compartment;
spring means for resiliently supporting said sheaf compartment; and
vibration means secured to said compartment for vibrating

the compartment, said vibration means giving the compartment a vertical vibration component as well as a horizontal vibration component which latter intersects the side wall plane of the compartment at an oblique angle.

4,371,156
CENTERING CONVEYOR, PARTICULARLY FOR BOOKBINDERY AND THE LIKE
Giorgio Pessina, and Aldo Perobelli, both of Via Arborina 2, Paderno Dugnano, (Milano), Italy (20037)
Filed Oct. 17, 1980, Ser. No. 197,791
Claims priority, application Italy, Oct. 17, 1979, 26556 A/79
Int. Cl.³ B65H *39/055*
U.S. Cl. 270—54 **6 Claims**

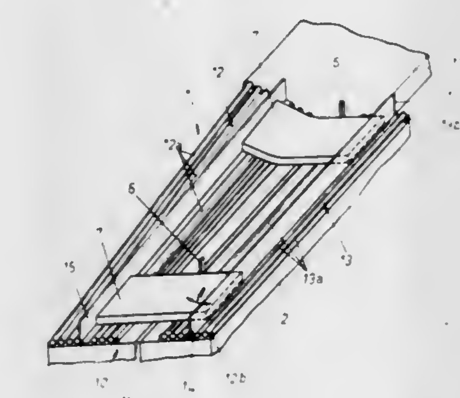

1. In a bookbinding machine, an intermediate centering conveyor (1) between a collator and a stacker, said intermediate conveyor engaging books which it moves from the collator to the stacker and constituting:
(A) a supporting frame (2),
(B) a chain (3) with entraining means (6) and driving means (4,5) for transferring books in mutually spaced relationship from the collator to the stacker, and
(C) a work surface (10) divided by a slit (11) for the passage of the entrainers therethrough into two stationary halfsurfaces (12,13),
the improvement comprising:
(D) one of said surface halves (13) extending substantially along a horizontal plane,
(E) the other of said surface halves (12) being an elongated continuous surface having a portion inclined relative to said horizontal plane at an input end of the intermediate conveyor and a substantially horizontal surface at the output end of the intermediate conveyor, which horizontal surface is substantially coplanar with the one surface half (13), a transition portion being continuous with and interconnecting said inclined portion with said horizontal portion, said transition portion providing a surface for gradually and continuously transitioning books conveyed along said surface halves from a partially inclined orientation to a fully planar horizontal position,
(F) stationary friction attenuating means (12*a*, 13*a*) forming the upper surfaces of the two surface halves,
(G) different elongated side boards (14,15) mounted on each of said surface halves on opposite sides of the slit, for aligning the sheets of the books as the books are conveyed along the surface halves,
(H) one of said side boards (14) being located on the horizontal surface half (13) extending in a substantially horizontal direction parallel to the horizontal plane of said horizontal surface half,
(I) means connecting the end of the side board (14) at the input end of the intermediate conveyor for swinging movement about a vertical axis, and
(J) screw clamps for detachably securing said side boards to their associated halves.

4,371,157
COMPACT ENVELOPE HANDLING DEVICE
Ronald E. Hunt, Georgetown, and William M. Jenkins, Austin, both of Tex., assignors to International Business Machines Corporation, Armonk, N.Y.
Filed Dec. 24, 1980, Ser. No. 219,684
Int. Cl.³ B65H *5/00*
U.S. Cl. 271—2 **7 Claims**

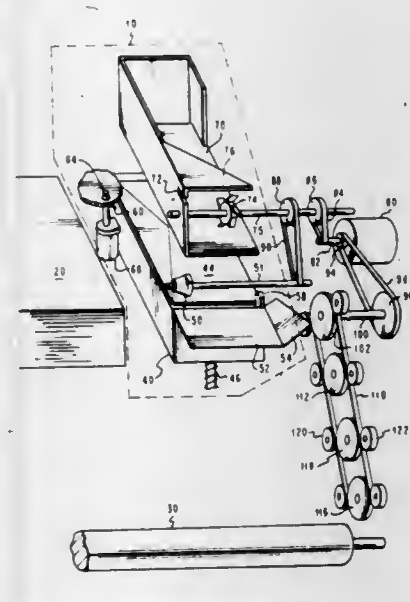

1. Envelope handling apparatus for feeding to and delivering from an operating station comprising:
first hopper means for holding a stack of envelopes in an orientation transverse to that of said operating station;
means for separating the topmost envelope in the stack;
first means for pivoting the separated envelope 90° comprising a first restraint member in the feed direction acting as a pivot point, and
an upwardly angled guide surface adjacent said first hopper for guiding the trailing edge, and
a gate, operable in response to a feed signal developed by said operating station, adjacent said guide for restraining rotation about said pivot point;
means for feeding the separated envelope past said operating station;
second hopper means disposed directly over said first hopper;
second means; positioned between said operating station and said second hopper means, for pivoting said envelope 90°, and
means for conveying said envelope to said second hopper.

4,371,158
SHEET TILTING SUCTION TYPE SEPARATOR
Karl Marx, Radebeul; Klaus Winkler, Coswig; Kurt Schmidt, and Joachim Jentzsch, both of Karl-Marx-Stadt, all of German Democratic Rep., assignors to VEB Kombinat Polygraph "Werner Lamberz" Leipzig, Leipzig, German Democratic Rep.
Filed Jun. 16, 1980, Ser. No. 160,100
Claims priority, application German Democratic Rep., Mar. 26, 1979, 211780
Int. Cl.³ B65H *3/08*
U.S. Cl. 271—103 **3 Claims**

1. A tiltable suction type sheet separaor for use in a feeding apparatus of a sheet manufacturing or processing machine, comprising a rigid base body supported for a reciprocating movement in a vertical direction relative to a stack of sheets, a suction member connected to said body and including a downwardly projecting hollow cylinder of an elastomeric material, the center axis of the inner surface of said hollow cylinder being offset from the center axis of the outer surface to provide a cylindrical wall of a circumferentially varying thickness, said cylindrical wall having in the range of its smallest thickness a

single recessed constriction extending in a plane which is parallel to the base plane of the hollow cylinder, said constriction

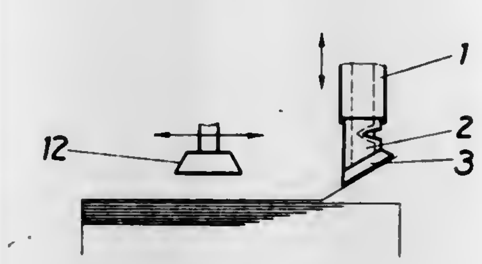

having the form of an annular section the radius of which exceeds the radius of said outer cylindrical surface.

4,371,159
HANDLING INSTALLATION FOR BRINGING A PIECE TO A RECEIVING STATION IN A PREDETERMINED POSITION
Joël Doyen, Ste Savine, and Jean-Pierre Raisin, Troyes, both of France, assignors to Agence Nationale de Valorisation de la Recherche, Neuilly sur Seine, France
Filed May 21, 1980, Ser. No. 151,822
Claims priority, application France, May 29, 1979, 79 13658
Int. Cl.³ B65H *9/10, 5/16*
U.S. Cl. 271—228 **13 Claims**

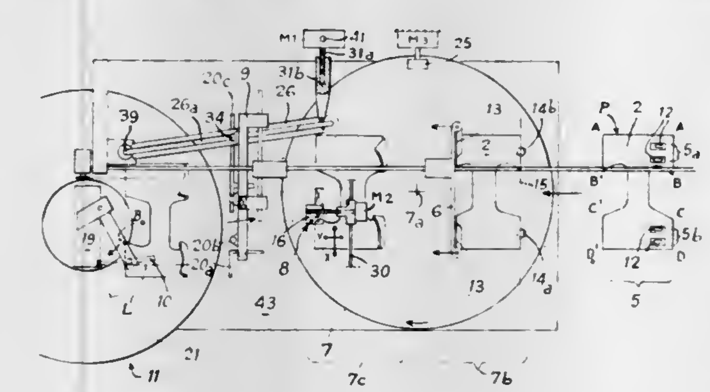

1. A handling installation for transporting a piece of fabric from a first station in an approximate position to a second station in a predetermined position, comprising:
a generally planar surface extending between the first and the second stations on which the fabric can slide;
a transfer carriage movable over the planar surface between a first position wherein the transfer carriage is at the first station and a second position wherein the transfer carriage is at the second station, gripping means carried by the transfer carriage and selectively movable into and out of gripping contact with the fabric resting on the planar surface, the second position having a predetermined fixed position, the first position being translatable along two non-parallel directions of a plane parallel to the planar surface;
locating means mounted above the planar surface to supply position information relative to the position of a predetermined reference point of the fabric at the first station; and
correcting means operably connected to the transfer carriage for adjusting the first position of the transfer carriage in the two directions in response to the position information from the locating means so that the position of the transfer carriage in the first position relative to the position of the fabric at the first station is identical to the position of the transfer carriage in the second position relative to the predetermined fixed position of the fabric at the second station.

4,371,160
EXERCISE DEVICE FOR RUNNERS
Michael L. Shooltz, 191 Hamilton St., Cambridge, Mass. 02139
Filed Mar. 4, 1981, Ser. No. 240,478
Int. Cl.³ A63B *23/04, 21/04*
U.S. Cl. 272—96 **5 Claims**

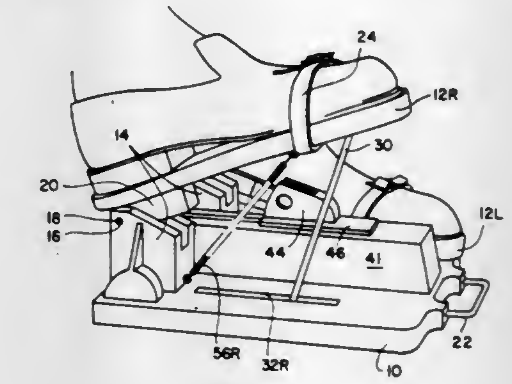

1. A foot and leg exercise device including:
A. a supporting base;
B. a supporting block attached to the base at one end;
C. a foot pad having a heel pivotally connected to and elevated by the block;
D. a restraining means attached to the foot pad for holding the user's foot on the pad; and
E. a biasing means attached to the base and to the foot pad for exerting downward pressure on the foot pad to resist upward pivotal movement of the user's foot, the biasing means including a path-defining member on the base and a sliding shock cord that is attached to the foot pad at one end, is trained around the path-defining member for sliding with respect to it, and is secured at the other end to require stretching of the shock cord when the foot pad is pivoted away from the base.

4,371,161
ANKLE AND FOOT EXERCISE APPARATUS
Victor N. Williams, 2913 Peregoy Dr., Kensington, Md. 20795
Filed May 5, 1981, Ser. No. 260,791
Int. Cl.³ A63B *23/00*
U.S. Cl. 272—96 **4 Claims**

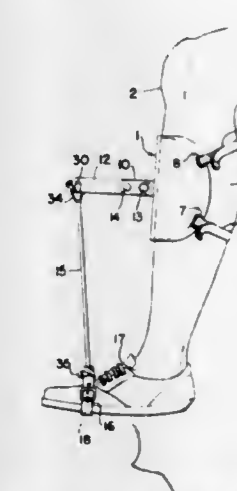

1. An ankle and foot exercise apparatus comprising:
a rigid member adapted to be connected to the lower leg; a support arm connected to said rigid member; a flexible member adapted to be connected to the ball of the foot; an elastic member having a top end and a bottom end; connecting means for attaching the top end of said elastic member to said support arm; and connecting means for attaching the bottom end of said elastic member to said flexible member; wherein the said rigid member comprises a base plate formed to fit snugly over the leg shin bone; straps for attaching said base plate to said leg; two side supports permanently affixed to said base plate, with each

side support having therein a first hole and a second hole, with said first hole being located closer to said base plate than said second hole; said support arm having a first hole and a second hole; and bolt and pin means for connecting said support arm to said side supports.

4,371,162
EXERCISING DEVICE
Richard P. Hartzell, 255 Westville Lake Rd., Beloit, Ohio 44609
Filed Apr. 3, 1981, Ser. No. 250,652
Int. Cl.³ A63B *21/12, 21/16, 21/20*
U.S. Cl. 272—134 **11 Claims**

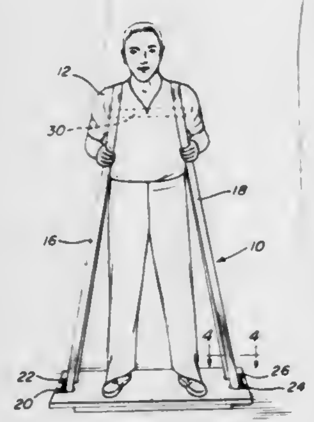

5. An exercising device comprising a rigid footboard having a planar upper surface on which a user can be positioned when exercising, a base underlying a major portion of the footboard and including a planar lower surface parallel to the upper surface, said lower surface of the base engaging a support surface to provide stable support for the footboard when a user engages the footboard in an off center position, said footboard including a pair of opposed end edges with each end edge including a pair of inwardly extending slots extending inwardly from the end edge and terminating adjacent the end of the base, the upper surface of the footboard being free of obstructions and the slots being disposed centrally of the end edges, said pair of slots at one end of the footboard being spaced from the slots at the other end of the footboard a distance to receive the feet of a user when standing in a normal stance with the feet spaced apart thereby enabling a user to position his feet in various positions on the upper surface of the footboard including positions parallel to the end edges and perpendicular thereto without encountering obstructions, an elastic strap of one-piece endless construction having a portion thereof received in one pair of slots with the remaining portion extending above the footboard for engagement by a user, said strap having a rectangular cross-sectional configuration for comfortably engaging body surface areas of a user, said strap being readily detachable from the slots to enable selective use of straps having different dimensional characteristics and strength characteristics to enable a user to practice various exercising programs by the user changing position on the footboard and changing relationship with the strap.

4,371,163
BOWLER'S WRIST AND FINGER CONTROL DEVICE
Robert L. Shaffer, 10439 Greenview Rd., Columbia Station, Ohio 44028, and Richard W. Heckman, 1170 Cahoon Rd., Westlake, Ohio 44145
Filed Nov. 26, 1980, Ser. No. 210,831
Int. Cl.³ A63B *69/00*
U.S. Cl. 273—54 B **1 Claim**

1. A wrist and forefinger support for a bowler, comprising a rigid support body provided with a layer of resilient material between said support body and said bowler's hand, said rigid support body adapted to extend dorsally from said bowler's forefinger to a location on his forearm above his wrist, and having a proximal and a distal portion, said distal portion extending over the entire length of said bowler's forefinger only, and being cylindrically curved concavely downward so that it curves generally around, and partially encases, the forefinger, said proximal portion having a hand covering portion covering said bowler's hand and a wrist covering portion covering his wrist, said hand covering portion being transversely widened to cover essentially the entire dorsal surface of the bowler's hand, including the area extending from the base of the little finger to the base of the forefinger, said proximal portion extending dorsally over a portion of said bowler's forearm, and curving cylindrically to fit generally around said hand, wrist and forearm;

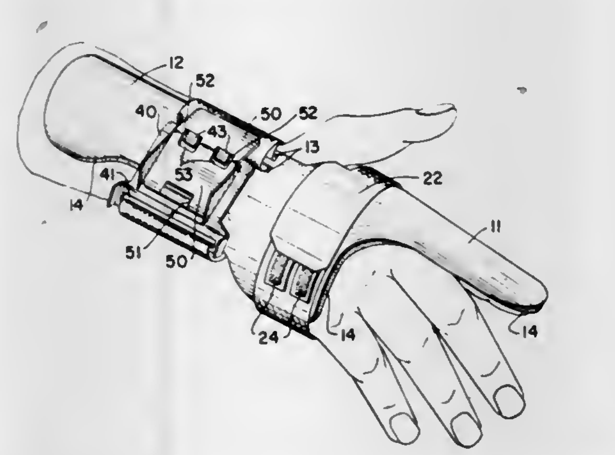

strap means to secure said support body firmly but removably against said bowler's hand and wrist;
said support means and strap means being so constructed as to restrict the backwards movement of said bowler's hand to a range of from and including zero degrees, with respect to the axis of said bowler's forearm, up to five degrees forward, and being so constructed as to restrict the backwards movement of said bowler's forefinger to an optimal angular range of 15 to 20 degrees forward, with respect to the axis of said bowler's hand.

4,371,164
PROJECTED GAMING METHOD AND APPARATUS
Ronald D. Halliburton, Fort Lauderdale, Fla., assignor to Bally Manufacturing Corporation, Chicago, Ill.
Filed Feb. 19, 1980, Ser. No. 122,748
Int. Cl.³ A63D *3/02*
U.S. Cl. 273—121 A **10 Claims**

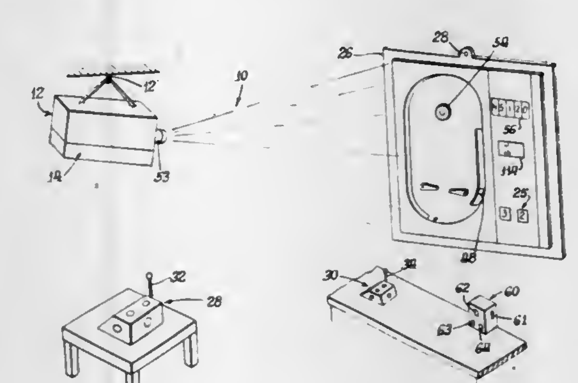

1. A projected gaming apparatus comprising:
an opaque projector;
a screen positioned to receive projected images from said opaque projector;
at least one three-dimensional game of skill having a viewable face that presents an opaque image positioned in said opaque projector for display of said viewable face on said screen, and
at least one player control unit for controlling events in said game, said player control unit connected to said game and said projector to control the operation of said projector and said game while the image of said viewable face is displayed on said screen for viewing.

4,371,165
TOP DICE ROULETTE GAME
Bobby J. Tammen, Rte. 2-Box 233, Colorado City, Tex. 79512
Division of Ser. No. 175,146, Aug. 4, 1980, Pat. No. 4,299,592. This application Jun. 18, 1981, Ser. No. 275,142
Int. Cl.³ A63F *9/16*
U.S. Cl. 273—147 **1 Claim**

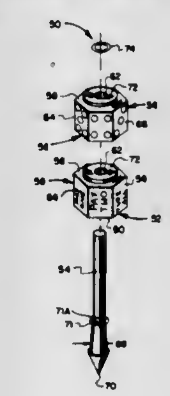

1. A chance member for simultaneously casting, a plurality of game commands and/or indicia comprising:
a shaft having one end pointed so that the chance member can be easily spun on said point;
two cylindrically-shaped sections removably mounted on said shaft, each having a top, a base, a longitudinal bore and a circumferential periphery;
wherein each said periphery is divided into a plurality of longitudinal faces, each face extending from said top to said base;
wherein one game command or one indicia is on each face of said sections;
wherein said shaft of said chance member is of increasing radius near the pointed end providing a removable friction fit for said shaft in the longitudinal bore of one of said sections so that said sections does not rotate about said shaft when said chance member is spun, thereby providing a sufficient mass near the pointed end to give stability to the spinning member;
wherein the tops of said sections each have a washer-shaped spacer permanently affixed thereto, which facilitates freedom of rotation of one of said sections when it is mounted on said shaft so that its base rests on the top of the other of said sections;
a means for removably and rotatably mounting the base of one of said sections, when a second section is desired to be used, to the spacer at the top of the other of said sections so that when the chance member is spun, the second section may rotate about said shaft relative to the first section without slipping off the shaft, the chance member coming to a stop with one face of each section directed face up;
wherein said mounting means includes a resilient annular bushing that is friction-fitted around said shaft above the second section; and
wherein said sections are identically-shaped so that their mounting positions are interchangeable for singular use or in combination with each other.

4,371,166
CYLINDRICAL PUZZLE
Daniel B. Ferris, New York, N.Y.; Martin M. Trossman, Washington Township, Washington County, N.J., and Charles R. Luchsinger, Glen Cove, N.Y., assignors to Synergistics Research Corporation, New York, N.Y.
Filed Mar. 11, 1981, Ser. No. 242,459
Int. Cl.³ A63F *9/12*
U.S. Cl. 273—157 R **12 Claims**

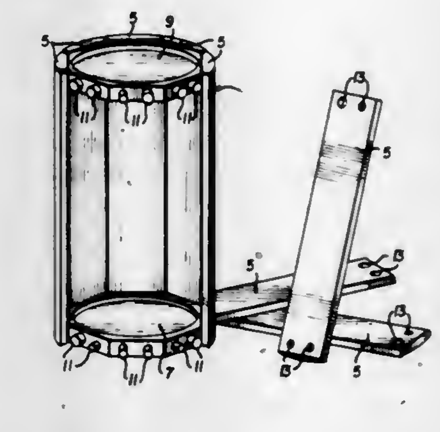

1. A geometric puzzle generally in the shape of a cylinder comprising two end portions and a plurality of removably attached side segments adapted to extend between and connect said end portions, each of said end portions having a plurality of first attaching means and each of said side segments having at least one second attaching means disposed at each end thereof configured to mate with certain ones of said first attaching means, such that said side segments may be connected to said end portions with said certain ones of said first attaching means mating with said second attaching means to thereby form a cylindrical structure, and a cylindrical cardboard sleeve which fits over the connected end portions and side segments.

4,371,167
PSYCHOGRAPHS WITH SOUND PRODUCING MEMBERS
Edward D. O'Brian, 2125 W. Falmouth Ave., Anaheim, Calif. 92801
Filed Jul. 1, 1980, Ser. No. 164,924
Int. Cl.³ A63F *9/18*
U.S. Cl. 273—161 **9 Claims**

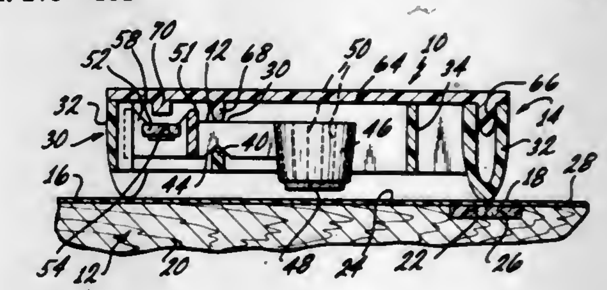

1. A psychograph including a bottom member having an upper surface and a planchette capable of being moved relative to said upper surface in which the improvement comprises:
a plurality of indicia located on said upper surface of said bottom member, said indicia being spaced from one another,
a magnetic means located on said planchette so as to be movable relative to said planchette,
a plurality of other magnetic means capable of magnetic interaction with said magnetic means on said planchette each of said means capable of magnetic interaction being located adjacent to one of said indicia,
each of said magnetic means capable of magnetic interaction being located on said bottom member,
said planchette includes a viewing means for designating

only a specific one of said indicia at any one time in accordance with the position of said planchette on said upper surface,

said permanent magnet being located on said planchette in a position in which it will be moved in response to magnetic interaction with one of said other magnetic means when said planchette is in a position to designate a specific one of said indicia,

at least one sound producing means located on said planchette for producing a sound in response to movement of said magnetic means on said planchette with respect to said planchette,

at least one of said magnetic means comprising a permanent magnet,

said position having a predetermined meaning which is associated only with the use of said psychograph.

4,371,168
POCKET-SIZE CHESS GAME
Robert C. Dupuis, 532 du Roi St., Quebec, Canada (G1K 2X2)
Filed Jun. 8, 1981, Ser. No. 271,633
Int. Cl.³ A63F *3/01*
U.S. Cl. 273—239 **6 Claims**

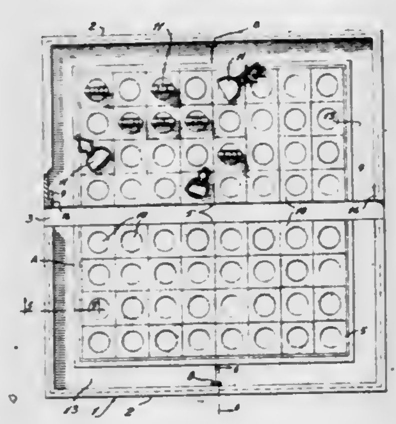

1. A pocket-size chess set comprising a pair of identical flat and generally rectangular panels; a third narrow, intermediate panel, each of the said pair of panels having an inner edge pivotally secured to one side of said third panel, the latter extending between said inner edges of said pair of panels; each of said pair of panels having a top surface, said top surface being provided with half a slidable checkerboard; each said half being made of a para-magnetic material and slidable from a first retracted position and a second play position, wherein their inner sides touch over said third panel, forming a complete checkerboard; means to slidably retain each said half on each said top surface; means to limit the inward movement of each said checkerboard half when the latter are in play position; further comprising a set of thirty-two chessmen; each said chessman having a back surface provided with a small permanent magnet which projects slightly below the bottom of each said chessman, whereby said chessmen may be placed either vertically or horizontally on said checkerboard halves, each of the latter having a lateral and outer side margin for the placing of captured chessmen thereon during the course of a game.

4,371,169
IMAGINARY MULTI-LEVEL TICKTACKTOE
A. Berkeley Compton, 3420 Windsor Ct., Pleasanton, Calif. 94566
Filed Nov. 3, 1980, Ser. No. 203,368
Int. Cl.³ A63F *3/00*
U.S. Cl. 273—271 **10 Claims**

1. A tictactoe game comprising at least three tictactoe boards, each board comprising at least nine locations arranged in a common geometric pattern, each location comprising means for temporarily retaining a removable indication of either of two different types thereon, said boards each having a rectangular shape and being substantially planar, means attaching said boards to form a substantially planar array such that at least one of said boards is contiguous to the other two, said means comprising pivotable attachment means at at least two respective corners of said one board and at at least one

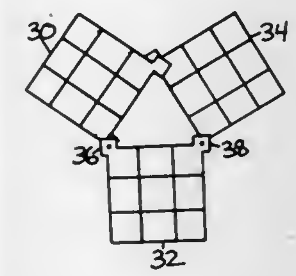

corner of each of said other two boards for attaching said boards such that they can be rotated with respect to each other in a plane parallel to their planarity.

4,371,170
ALIGNMENT GAME WITH CROSS SHAPED PLAYING FIELD
Francisco Acevedo, Caguas, P.R., assignor to Commonwealth of Puerto Rico, San Juan, P.R.
Filed Mar. 24, 1981, Ser. No. 247,107
Int. Cl.³ A63F *3/00*
U.S. Cl. 273—271 **1 Claim**

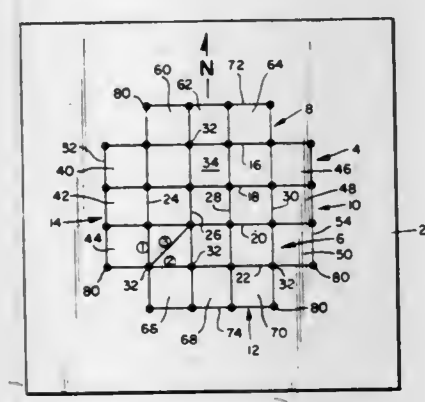

1. A game to be played by two or four players in accordance with rules, comprising the following parts,

(a) a game board having marked thereon a cross shaped playing field consisting in its entirety of

i. a square central area subdivided into nine squares of equal size by four north-south extending lines and four east-west extending lines providing sixteen points of intersection,

ii. each of the north-south lines being extended beyond the central area to provide both north and south of the central area three squares which are equal in size to the squares of the central area bounded at the north or south extremity by east-west extending lines defining four points of intersection with the north-south extending lines,

iii. each of the east-west lines being extended beyond the central area to provide both east and west of the central area three squares which are equal in size to the squares of the central area bounded at the east or west extremity by north-south extending lines defining four points of intersection with the east-west extending lines,

(b) two sets of visually differentiated movable play pieces,

(c) at least one die, and

(d) a set of rules by which the play pieces are moved to points of intersection.

4,371,171
SELF-CONTAINED GAME
Gary S. Silverman, Plymouth; Robert D. Zera, Minneapolis; James F. Kubiatowicz, Fridley, and Robert L. Claussen, Crystal, all of Minn., assignors to Custom Concepts Incorporated, Minneapolis, Minn.
Filed Dec. 8, 1980, Ser. No. 214,044
Int. Cl.³ A63F *9/02*
U.S. Cl. 273—357 **4 Claims**

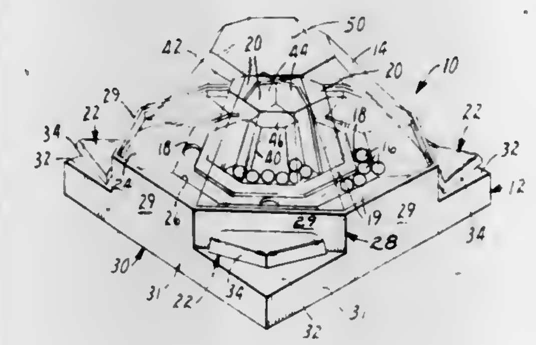

1. A self-contained game comprising a base; an at least partially transparent dome mounted on the base to provide a single enclosed space therebetween; and a plurality of freely movable generally spherical similarly sized objects within the space; said space having a plurality of sockets opening into said single space, each adapted to receive one of the objects, and an upper surface having portions adjacent each socket shaped so that the objects will be guided via gravity to the adjacent socket; and said game further including open-topped receptacles generally centrally located on the base within said single space with a different one of said receptacles adjacent each of said sockets; and a plurality of levers each comprising an impact portion adapted to be impacted, and a hammer portion, each lever being pivotably mounted on said base with said impact portion accessible outside said dome and said hammer portion adjacent a different one of said sockets on the side of said base opposite said upper surface for pivotable movement from a normal position to which said hammer is biased with said hammer spaced from said socket, to an impact position with said hammer portion at said socket, so that said levers may be manually moved from their normal to their impact positions by players to impart force to objects in the sockets, causing the objects to fly upwardly into the space in an attempt by the players to propel the objects into the receptacles; said receptacles each including a lower portion defined by inner and outer generally vertical walls spaced at a distance only slightly exceeding the diameter of said objects and by side walls spaced a distance exceeding a multiple of said diameter so that objects in said receptacle will be disposed generally vertically and side by side between said walls, said outer wall being transparent to afford viewing and counting of said objects between said walls through said dome and outer wall.

4,371,172
ANCHORING AND SEALING COUPLING FOR A CABLE
Robert de Vienne, Paris, France, assignor to Capri-Codec SA, Colombes, France
Filed Mar. 3, 1981, Ser. No. 240,125
Claims priority, application France, Dec. 30, 1980, 80 27752
Int. Cl.³ F16J *15/12;* **F16L** *21/04*
U.S. Cl. 277—12 **10 Claims**

1. An anchoring and sealing coupling for a cable comprising a tubular main body, means on said body for fixing said body to a wall, an axial channel extending through said body terminated at one end by a conical flared portion, an annular nut threadedly engaging on to said one end of the body encircling said conical flared portion, the outer end of said nut having an axial bore therethrough of diameter similar to the diameter of said axial channel, a deformable sealing ring within the interior of said nut and supported thereby adjacent said outer end, said sealing ring comprising a cylindrical washer of thermoplastic or elastomeric material, an annular clip between said sealing ring and said conical flared portion for anchoring a cable extending through said tubular body and nut, said annular clip comprising a cylindrical annular base having an externally conically shaped radially slotted portion extending therefrom of plastically deformable material, and an external annular

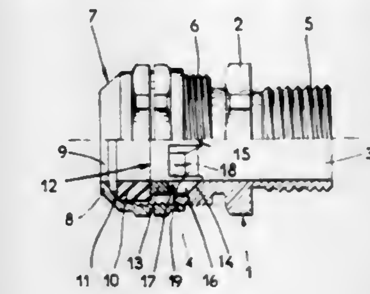

groove at the juncture of said base and slotted portion, the radial slots extending into said groove, whereby tightening of said nut deforms said sealing ring causing the sealing ring to move said conically shaped slotted portion of said clip against said conical flared portion of said main body to force said radially slotted portion radially inwardly into engagement with the cable.

4,371,173
FLUID-LOCKED SHAFT SEAL OF REDUCED SLIDING SPEED
Joachim Kotzur, Oberhausen, Fed. Rep. of Germany, assignor to M.A.N. Maschinenfabrik Augsburg-Nürnburg Aktiengesellschaft, Oberhausen, Fed. Rep. of Germany
Filed Apr. 7, 1982, Ser. No. 366,299
Claims priority, application Fed. Rep. of Germany, Apr. 28, 1981, 3116762
Int. Cl.³ F16J *15/36, 15/38;* **F01D** *11/00;* **F04D** *29/12*
U.S. Cl. 277—12 **6 Claims**

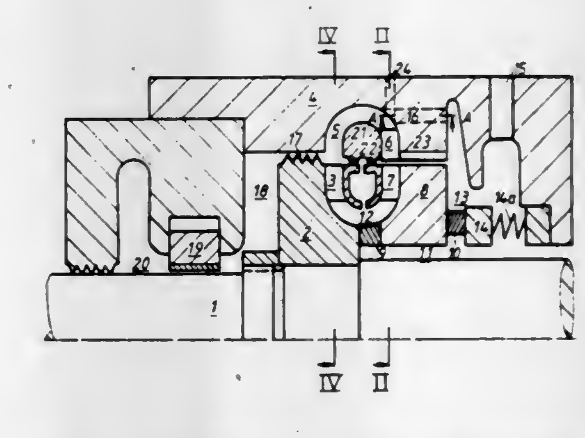

1. A fluid-locked shaft seal, comprising a housing, a rotating shaft in said housing, a seal ring in said housing affixed to said shaft for rotation therewith, a packing ring disposed in said housing around said shaft and fixed radially in respect to said shaft, flexible means connected between said packing ring and said housing permitting flexible axial movement of said packing ring relative to said housing, a slide ring in said housing around said shaft between said seal ring and said packing and connected to said shaft for rotation at substantially half the speed of rotation of said shaft, a pump rotor formed with said seal ring disposed on its side adjacent said slide ring generating a fluid flow, said housing and said seal ring and slide ring defining a deflection channel, a plurality of stationary impellers disposed in said deflection channel, wherein said slide ring has a turbine wheel disposed in said channel.

4,371,174
COMPRESSION RINGS FOR PISTONS
Rudolf W. Gürtler, Weinstadt, Fed. Rep. of Germany, assignor to Mahle GmbH, Stuttgart, Fed. Rep. of Germany
Filed Dec. 24, 1980, Ser. No. 219,833
Claims priority, application Fed. Rep. of Germany, Jan. 4, 1980, 3000146
Int. Cl.³ F16J *15/20*
U.S. Cl. 277—24 **8 Claims**

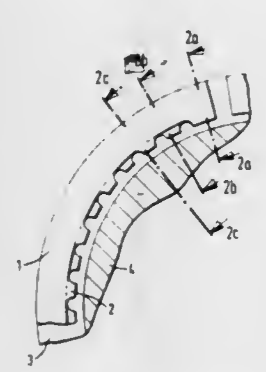

1. In a compression ring for pistons of internal combustion engines the provision of:
(a) a plurality of projections distributed over the inner circumference of the compression ring to form a series of sharp edges.
(b) said sharp edges being so aligned that, when the compression ring rotates in a piston ring groove, they act in a scraping manner with respect to deposits disposed in the radial bottom of such a groove,
(c) flanks are associated with sharp edges which are aligned in such a way that the forces of the gases flowing around the compression ring act on the flanks to bring about a rotation of the compression ring.

4,371,175
INFLATABLE GASKET FOR RADIO FREQUENCY SHIELDING ENCLOSURE
Garritt C. Van Dyk, Jr., Bethel, Conn., assignor to Keene Corporation, Norwalk, Conn.
Filed Aug. 18, 1981, Ser. No. 294,015
Int. Cl.³ F16J *15/12, 15/46;* **H05K** *9/00*
U.S. Cl. 277—34 **8 Claims**

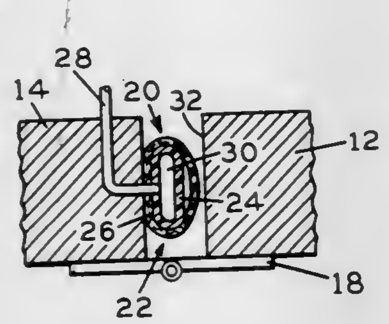

1. An inflatable gasket for providing an electrically conductive seal between first and second adjacent conductive sections of a shielding enclosure comprising:
(a) an inflatable elastomeric tube secured to a substantially planar surface of said first section and aligned in close proximity to the periphery of said first section, said tube having a flattened cross-section having a major axis extending parallel to said planer surface and a minor axis when uninflated and becoming elongate in the direction of said minor axis when inflated;
(b) a loosely fitting flexible deformable shielding medium surrounding said tube; and
(c) means through which said tube may be inflated and deflated whereby shielding medium is deformed into contact with said second section when said tube is inflated and is deformed out of contact with said second section when deflated.

4,371,176
SEALING CONSTRUCTION FOR ROTATING PORTIONS AT A BICYCLE
Keizo Shimano, Sakai, Japan, assignor to Shimano Industrial Company Limited, Osaka, Japan
Filed Jun. 6, 1980, Ser. No. 157,027
Claims priority, application Japan, Jun. 20, 1979, 54-85325[U]
Int. Cl.³ F16J *15/44*
U.S. Cl. 277—56 **7 Claims**

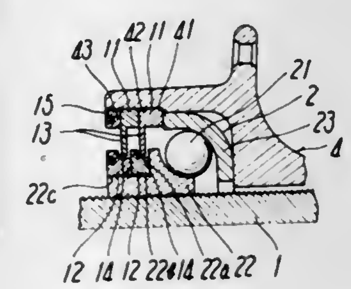

1. A bicycle hub comprising a hub shaft, a pair of ball holders screwed with said hub shaft, balls supported to said ball holders, ball races receiving said balls, and a hub shell rotatably supported to said hub shaft through said balls, said bicycle hub having at least one first sealing member of ring-like shape, and at least one second sealing member of ring-like shape mounted adjacent to a first sealing member, each said first sealing member being larger in diameter than each said second sealing member, each said first sealing member being supported on the inner periphery of said hub shell and having a first annular projection extending radially inwardly from an inner periphery thereof, at least one of said ball holders having an extension which projects axially outwardly through a stepped portion, each said second sealing member having an inner diameter slightly larger than said extension of said ball holders, and being supported to said extension of said ball holder and having a second annular projection extending radially outwardly from the outer periphery thereof, said second annular projection having an outer diameter larger than an inner diameter of said first annular projection.

4,371,177
SELF-LOCKING SEALING AND WIPER RING
Günter Bähr, Weinheim; Erich Habel, Fürth, and Werner Hafner, Leimen, all of Fed. Rep. of Germany, assignors to Firma Carl Freudenberg, Weinheim, Fed. Rep. of Germany
Filed Oct. 8, 1981, Ser. No. 309,801
Claims priority, application Fed. Rep. of Germany, Oct. 20, 1980, 3039534
Int. Cl.³ F16J *15/32*
U.S. Cl. 277—152 **6 Claims**

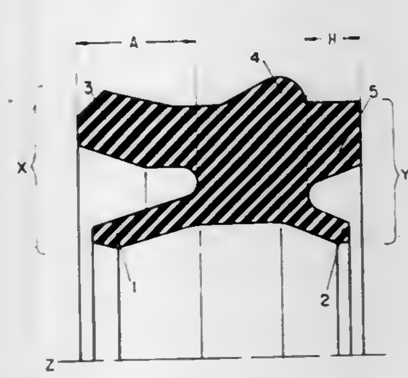

1. A self-locking sealing and wiper ring of elastomer material for pressure differential shaft sealing, which comprises a cylindrical body having a bore, inside and outside faces approximately perpendicular to the bore axis and an annular support projection joining the outside wall of the body; said inside face having inner and outer sealing lips disposed around its inner and outer diameters respectively; said outer face having an inner wiper lip disposed around its inner diameter and an outer support arm disposed around its outer diameter; and said projection having a circular arc shape in the cross section profile on the projection side directed toward the outside face and having a tapered shape in the cross section profile on the other side which is sloped at an angle of about 20° to about 40° relative to the bore axis.

4,371,178
SEALING ARRANGEMENT, PARTICULARLY FOR SEALING VALVE PISTON RELATIVE TO VALVE HOUSING
Helmut Ott, Stuttgart, Fed. Rep. of Germany, assignor to Herion-Werke KG, Fellbach, Fed. Rep. of Germany
Filed Jan. 21, 1981, Ser. No. 226,898
Claims priority, application Fed. Rep. of Germany, Jan. 25, 1980, 3002715
Int. Cl.³ F16K *3/24;* **F16J** *15/56*
U.S. Cl. 277—154 **18 Claims**

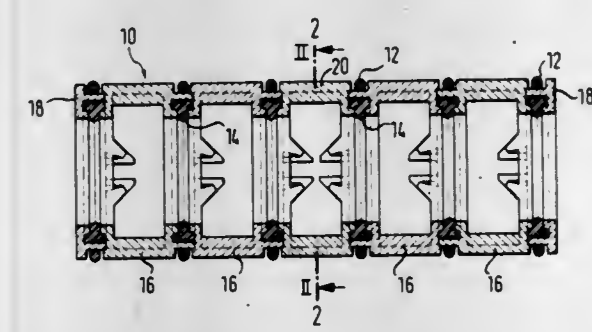

1. A sealing arrangement, particularly for sealing a valve piston relative to a valve housing having an axis, comprising a plurality of sealing rings arranged to be located between a valve piston and a valve housing, and axially spaced from each other; and a plurality of supporting rings located axially adjacent to each other and arranged to support and hold said sealing rings, said supporting rings being connected with said sealing rings in interengaging manner so as to form together with the same an integral unit which can be mounted and dismounted as a whole, each of said supporting rings having a body part with two axial sides and being provided with a first formation at one of said sides and a second formation on the other of said sides of said body part, said formations being arranged so that when two neighboring supporting rings are assembled with one another, the first formation of one of said neighboring supporting rings engages with the second formation of the other of said neighboring supporting rings.

4,371,179
T-SHAPED SEALING RING WITH ELONGATED LIP
Nils-Erik Bohman, Lillegard, Fänestad, Forsheda, Sweden
Filed May 12, 1981, Ser. No. 262,805
Claims priority, application Sweden, May 23, 1980, 8003870
Int. Cl.³ F16J *15/32*
U.S. Cl. 277—207 A **5 Claims**

1. A sealing ring for forming a seal between two substantially cylindrical surfaces, comprising:
an annular main portion having two radial faces, one of the radial faces adapted to engage one of the cylindrical surfaces and the other radial face having a pair of spaced apart annular grooves;
a pair of annular engaging portions extending radially from the other radial face of said annular main portion, each of said annular engaging portions located outwardly of each of the grooves; and
an elongated sealing lip projecting radially from the other radial face of said annular main portion, intermediate and parallel to the pair of grooves, a free end portion of said elongated sealing lip adapted to engage one of said annular

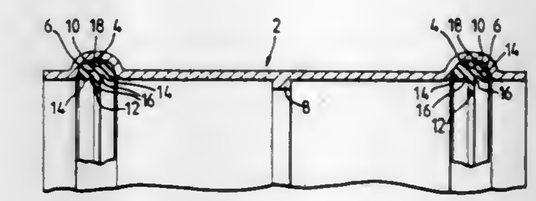

portions when deflected and compressed by the other cylindrical surface.

4,371,180
GASKET MATERIAL
Edward M. Case, Weston, and Chester S. Hopper, Newtown, both of Conn., assignors to The Marlo Company Incorporated, Newton, Conn.
Filed Mar. 24, 1980, Ser. No. 133,048
Int. Cl.³ F16J *9/20, 15/22*
U.S. Cl. 277—230 **2 Claims**

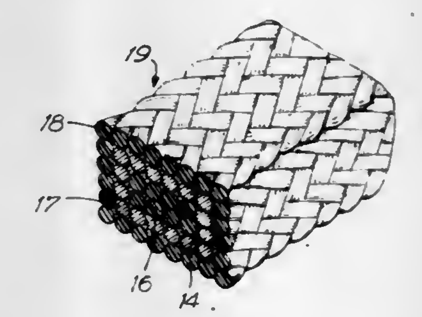

1. A gasket material consisting essentially of a braided sleeve of organic and vitreous fiber, said organic fiber providing the major portion of the conformability of said gasket and said vitreous fiber reinforceing said gasket against internal pressure, and an impregnant selected from the group consisting of dispersed polytetrafluoroethylene (TFE) and starch, wherein said sleeve comprises a braided base sleeve of vitreous fiber and an outer sleeve of organic fiber over said base sleeve, said impregnant being in all sleeves.

4,371,181
COLLISION RESISTANT AUXILIARY FUEL SYSTEM
Ray A. Monigold, 3226 193rd Pl. SE., Bothell, Wash. 98011, and William F. Russell, 9415 SE. 52nd St., Mercer Island, Wash. 98040
Filed Apr. 29, 1980, Ser. No. 144,886
Int. Cl.³ B60K *15/02*
U.S. Cl. 280—5 A **12 Claims**

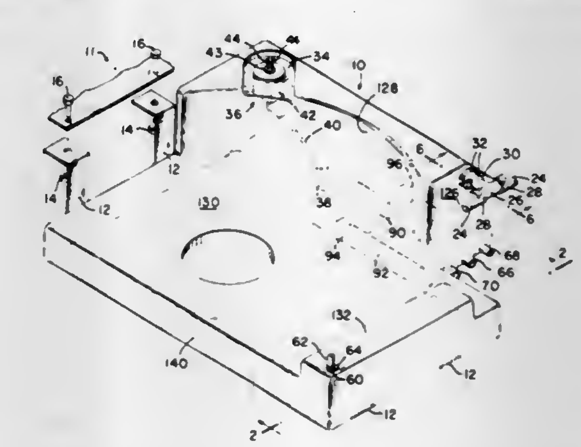

5. A collision resistant fuel system for a motor vehicle, wherein the fuel system has an enhanced ability to survive a

rear end collision of the vehicle on which it is mounted, the fuel system comprising:

a fuel tank; and

mounting means for releasably securing the fuel tank to the exterior of the bottom of the rear portion of the vehicle;

wherein the mounting means are for securely holding the fuel tank in place during normal operation of the vehicle;

wherein the mounting means are for at least partially releasing the fuel tank to permit forward movement of the fuel tank relative to the vehicle during said rear end collision of the vehicle to help avoid the crushing and rupturing of the fuel tank which might otherwise occur; and

wherein the fuel tank is located rearwardly of a transverse member of the vehicle, and the fuel tank includes an inclined wall on its forward portion which, during said movement of the fuel tank during said collision, is adapted to strike said transverse member, forcing the fuel tank to move downwardly as it moves forwardly, to help prevent the fuel tank from being crushed against the transverse member during said collision.

4,371,182
VEHICLE SUSPENSION SYSTEM
Peter W. Brown, Leicestershire, England, assignor to Lucas Industries Limited, Birmingham, England
Filed Feb. 9, 1981, Ser. No. 232,688
Claims priority, application United Kingdom, Mar. 5, 1980, 8007465
Int. Cl.[3] **B60G** *13/08*
U.S. Cl. 280—6 H **7 Claims**

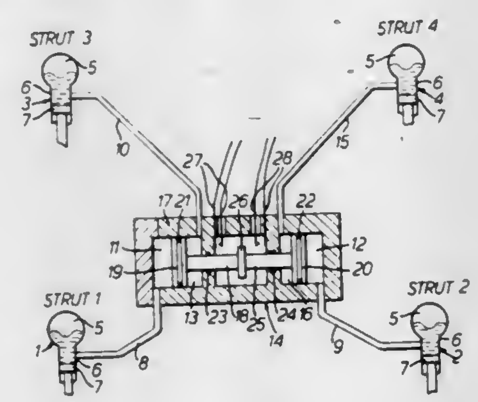

1. A vehicle suspension system for a vehicle having four ground engaging wheels, the suspension system comprising: a variable length suspension strut for each of said ground engaging wheels; detector means for detecting departure of the vehicle body from a datum zone which is fixed relative to a datum plane defined by three points on the unsprung portions of the vehicle suspension; means responsive to said detector means for controlling the effective length of three of said struts to restore the vehicle body to the datum zone; and means for adjusting the force exerted by the fourth strut to such a value that for any loading of the vehicle the ground reaction of the wheel associated with the fourth strut satisfies the condition:

$$R_4 = R_3 + k(R_2 - R_1)$$

where

R_4 = ground reaction of the wheel associated with the fourth strut

R_3 = ground reaction of the other wheel at the same end of the vehicle as the wheel associated with the fourth strut

R_2 = ground reaction of the other wheel at the same side of the vehicle as the wheel associated with the fourth strut

R_1 = ground reaction of the wheel diametrically opposed to the wheel associated with the fourth strut

k = a constant.

4,371,183
FOLDING WHEEL-CHAIR
Jean-Paul Dion, 327 - 21st St., Quebec, Canada (G1L 1X6)
Filed Dec. 22, 1980, Ser. No. 218,808
Int. Cl.[3] **B62B** *11/00*
U.S. Cl. 280—42 **8 Claims**

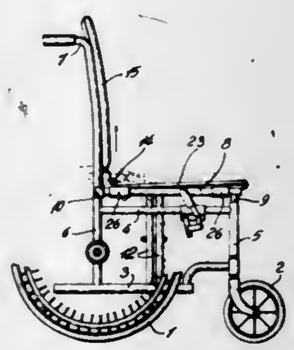

1. A folding wheel-chair operatively comprising a pair of opposite sides, an articulated bracing hinged to the opposite sides and folding therewith from an unfolded position to a folded position of the opposite sides with the latter, in their folded position, extending in laterally closer spaced-apart relationship, each of said opposite sides including a seat-carrying rod longitudinally extending in the fore and aft direction, a rigid base seat, at least one offsetting arm longitudinally extending laterally relative to said opposite sides and having an inner end pivotally connected to the rigid base seat under the same and intermediate its side edges, and an outer end pivotally connected to the seat-carrying rod of one of said opposite sides, with said one offsetting arm longitudinally extending laterally under the rigid base seat in supporting relationship therewith in the unfolded position of said opposite sides and upwardly and laterally offsetting the rigid base seat relative to said one side edge of said rigid base seat in the folded position of said opposite sides, a support device fixedly secured to said rigid base seat adjacent its other side edge and including a cylindrically concave bottom portion axially extending in the fore and aft direction for removably resting operatively onto the seat-carrying rod on the other of said opposite sides in the unfolded position of said opposite sides, and a rigid base backrest hinged to the rigid base seat and operatively foldable from an erected operative position to a folded inoperative position over the rigid base seat.

4,371,184
BIKE TRAILER
Derek J. Henden, 56 Woodlands Garden, Muswell Hill, London, England, and Stuart R. Morris, 195 Waller Rd., New Cross, London, S.E.14, England
Filed Feb. 9, 1981, Ser. No. 232,974
Int. Cl.[3] **B60D** *1/00;* **B62K** *27/12*
U.S. Cl. 280—204 **12 Claims**

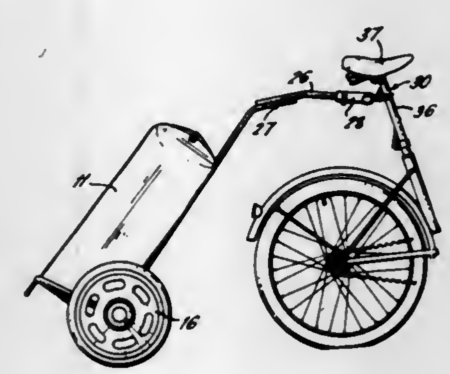

1. A lightweight trailer having a body to support a pay-load, a pair of wheels, a draw-bar extending from the body for attachment to a towing vehicle and a coupling for releasably connecting the free end of the draw-bar to a part of the towing vehicle comprising a spigot having means for attachment to a part of the towing vehicle and a flexible tubular element the respective ends of which receive the free end of the draw bar and spigot and means to fix the tubular element to one of the spigot and draw bar and to provide a releasable connection between the tubular element and the other of the spigot and draw-bar so that the trailer can be separated from the towing vehicle when required and the flexible tubular element can cater for variation in attitude between the towing vehicle and trailer.

4,371,185
TWO-WHEELED VEHICLE
Hans G. Bals, Blümgesgrund 44, Gelnhausen, Fed. Rep. of Germany
Continuation of Ser. No. 927,004, Jul. 24, 1978, Pat. No. 4,266,794. This application Apr. 14, 1981, Ser. No. 254,073
Claims priority, application Fed. Rep. of Germany, Jul. 30, 1977, 2734560
The portion of the term of this patent subsequent to May 12, 1998, has been disclaimed.
Int. Cl.[3] **B62M** *1/20;* **A63B** *69/16*
U.S. Cl. 280—227 **5 Claims**

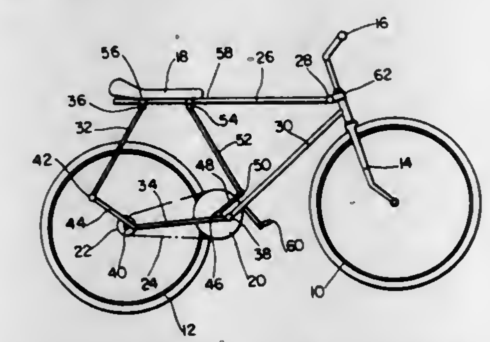

1. An exercising device comprising a frame including upper, lower, front and rear frame members, pivotable joint means connecting said upper frame member and said lower frame member to said front frame member, pivotable joint means connecting said upper frame member and said lower frame member to said rear frame member, a saddle carried on said upper frame member, handle bars mounted on said front frame member, a stand for supporting the lower frame member, an axle mounted in said stand and pivotally supporting said lower frame member, the rear portion of said lower frame member extending beyond the axle to said pivotable joint means connecting said lower frame member to said rear frame member, and pedals connected to one of the front frame and lower frame members.

4,371,186
ARTICULATION FOR VEHICLE, ESPECIALLY AN ARTICULATED BUS
Gerard Queveau, and Christian Cheron, both of 7, rue Louis Heuliez, 79140 Cerizay, France
Filed Jan. 7, 1981, Ser. No. 223,144
Claims priority, application France, Jan. 7, 1980, 80 00215
Int. Cl.[3] **B60D** *1/00*
U.S. Cl. 280—432 **21 Claims**

1. In an articulated vehicle of the type comprising a forward section with at least one axle and a rear section also with at least one axle, the forward and rear sections being interconnected by an articulation having three degrees of freedom, an improved articulation comprising:

a first element affixed to one of the vehicle sections;

a second element affixed to the other of the vehicle sections; and

an intermediate element, each of the elements presenting mean main planes which, with the vehicle on a horizontal surface, blend into a single horizontal plane, the first element being articulated on the intermediate element both around a longitudinal horizontal axis and around a transverse horizontal axis, the intermediate element comprising first and second vertical arcuate surfaces, each of the arcuate surfaces being concentric with a vertical axis, the first surface being convex and directed toward the second element and the second surface being concave and directed toward the first element, the second element further comprising means for engaging the first and second vertical arcuate surfaces to confine the intermediate element to articulation relative to the second element around the vertical axis.

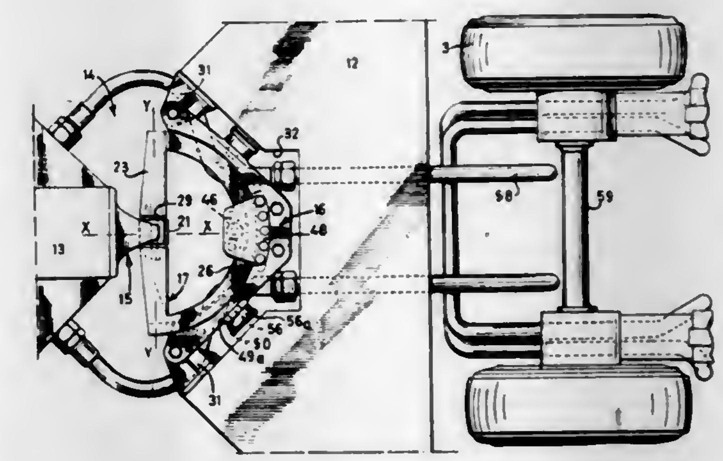

4,371,187
SKI BRAKE
Josef Svoboda, and Emilie Szabo, both of Schwechat, Austria, assignors to TMC Corporation, Baar, Switzerland
Filed Oct. 24, 1980, Ser. No. 200,121
Claims priority, application Austria, Oct. 25, 1979, 6933/79
Int. Cl.[3] **A63C** *7/10*
U.S. Cl. 280—605 **17 Claims**

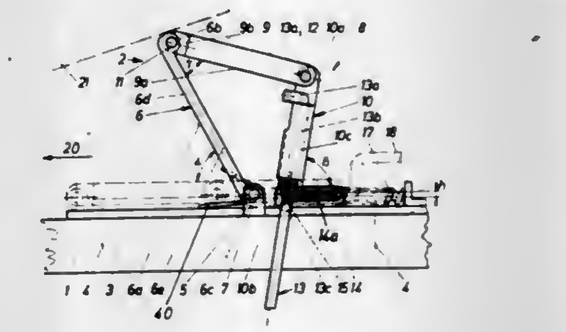

1. In a ski brake mountable on a ski, having a pedal supported on a base for pivotal movement between a braking position and a retracted position, and having two braking arms which each have one section which in the retracted position extends parallel to the longitudinal axis of the ski and is movably supported in said pedal and a second section which is parallel to and offset from said one section and can be swung in and out relative to the longitudinal axis of the ski, said pedal being pivotal against the force of a spring about a swivel axle which extends at substantially a right angle to the longitudinal axis of the ski and is supported on said base, the improvement comprising wherein said pedal includes frist and second parts which are pivotally coupled to one another, said braking arms being movably supported on said first pedal part, said swivel axle pivotally supporting said first pedal part at a location thereon spaced from said pivotal connection to said second pedal part, wherein said swivel axle is guidedly supported in a slide bearing for movement longitudinally of the ski, wherein said second pedal part is movably coupled at a location thereon spaced from said pivotal connection to said first pedal part to one end of an elongate bar, the other end of said bar being supported on said base for pivotal movement about a fixed axis

which extends substantially at a right angle with respect to the longitudinal axis of the ski, and wherein said first and second parts of said pedal and said bar form a toggle-joint system.

4,371,188
METHOD FOR PROGRAMMED RELEASE IN SKI BINDINGS
Maury L. Hull, Davis, Calif., assignor to University of California, Berkeley, Calif.
Filed Jun. 24, 1980, Ser. No. 162,413
Int. Cl.[3] A63C *9/08*
U.S. Cl. 280—613 **1 Claim**

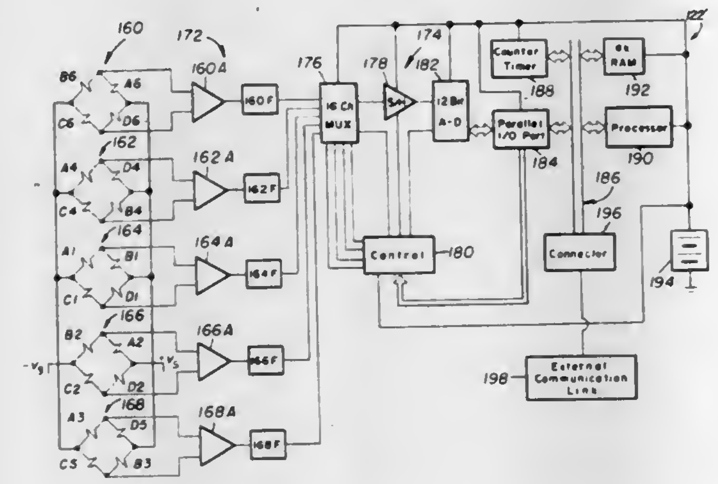

1. In a ski binding for releasably securing a ski boot to a ski, a method for minimizing injuries in a lower extremity of a skier, said method comprising:
measuring a plurality of mechanical deflections induced in said ski binding from interaction between said skier and said ski;
developing a plurality of first electrical signals, each of said first signals being determined from a different one of said deflections;
developing a plurality of second electrical signals determined from a relationship between said first signals, said second signals defining a measurement of forces along first selected ones of longitudinal, lateral, and vertical axes of said ski and moments about second selected ones of said axes, said mechanical deflections occurring in response to said forces and said moments; and
computing from said second signals an actual angle of deflection based on a preprogrammed relationship between said second signals, said actual angle of deflection being about a location of said lower extremity of the skier, said location being selected to prevent injury thereto, said computing step including comparing said actual angle of deflection with a predetermined critical angle of deflection to initiate a release of said ski binding in the event said actual angle exceeds said critical angle.

4,371,189
HEAVY VEHICLE SUSPENSION ASSEMBLY WITH FREE FLOATING SPRINGS AND AXLE STABILIZING TORQUE ROD
John E. Raidel, Rte. 9, Box 400-M, Springfield, Mo. 65804
Filed Oct. 14, 1980, Ser. No. 196,696
Int. Cl.[3] B60G *11/04*
U.S. Cl. 280—682 **17 Claims**

1. A vehicle suspension assembly for supporting a vehicle chassis on a vehicle axle comprising a first and second hanger depending downwardly from said chassis, a leaf spring bearing downwardly on said axle and with its ends bearing upwardly on said hangers, means to maintain said spring in a load bearing relationship to said axle and permit relative sliding movement therebetween, and a torque rod extending between said axle and said first hanger, said torque rod having means to stabilize said axle including means rigidly securing an end of the torque

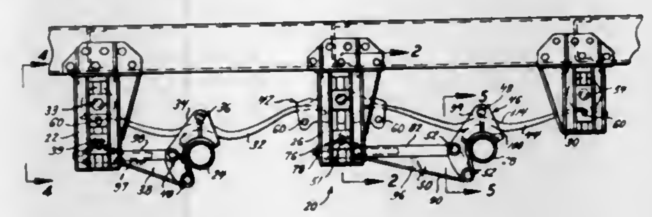

rod to the axle to resist torquing of said axle about its central axis and about the torque rod.

4,371,190
AXLE SUSPENSION SYSTEM
Ervin K. Vandenberg, Massillon, Ohio, assignor to Turner Quick-Lift Corporation, Canton, Ohio
Filed Jan. 28, 1980, Ser. No. 116,339
Int. Cl.[3] B60G *11/26*
U.S. Cl. 280—705 **30 Claims**

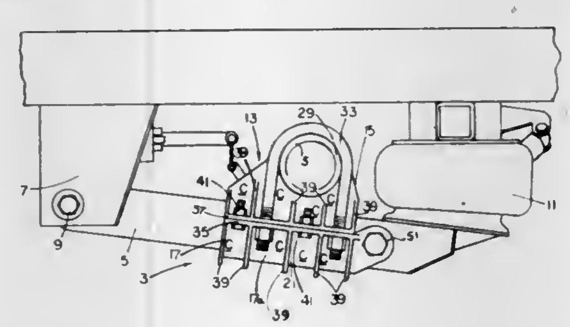

1. In an axle suspension system of the beam type including a longitudinal beam and further including an airbag and an axle-to-beam connecting member, each located along the beam, the improvement comprising as said axle-to-beam connecting member, a member which includes an axle housing capable of rigidly retaining an axle thereon, a beam housing having located therein a portion of said beam, an elastomeric element located between the beam housing and the portion of said beam located therein, a pin means for pivotally connecting the beam to the axle-to-beam connecting member, said pin means extending transverse to the longitudinal direction of said beam and being located between said member and said beam, and an elastomeric bushing located between said pin and said beam, said pin being located at a longitudinally spaced distance from said beam housing, such that torque forces about the longitudinal center line of an axle when located in said axle housing will effectively cause rotation of said beam housing about the center line of said pin.

4,371,191
ADJUSTING AUTOMOBILE SUSPENSION SYSTEM
Jerome Goldberg, Cold Spring, and Christopher D. Bloch, Hillsdale, both of N.Y., assignors to Springhill Laboratories, Inc., Cold Spring, N.Y.
Continuation-in-part of Ser. No. 826,709, Aug. 22, 1977, Pat. No. 4,191,274. This application Feb. 20, 1980, Ser. No. 123,024
Int. Cl.[3] B60G *17/00*
U.S. Cl. 280—707 **18 Claims**

1. An adjusting vehicle suspension system for a vehicle having a chassis and an individual suspension system at each wheel of the vehicle comprising:
sensing means at each wheel of the vehicle to sense the height of the vehicle chassis with respect to each said wheel;
sensing means on said vehicle to sense centrifugal force acting on said vehicle;
sensing means on said vehicle to sense longitudinal forces acting on said vehicle due to acceleration or deceleration;
control means carried by said vehicle to receive sensed changes in vehicle performance as indicated by the said sensing means;
said control means including means to alter and adjust camber, castor, toe-in/out, or wheel track of each said wheel

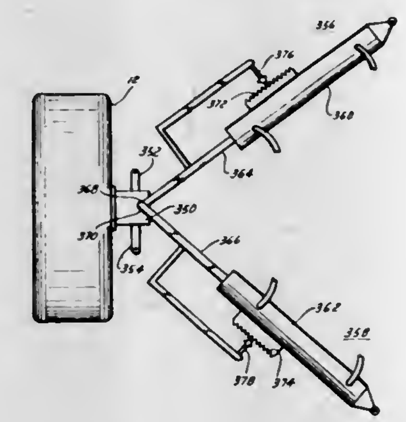

with respect to said vehicle chassis to maintain optimum road contact between each said wheel and the road based on a correlation of the factors sensed by said sensing means.

4,371,192
TENSION STOP FOR SAFETY BELT OF THE INERTIA REEL TYPE
Maurice A. J. Alix, Ecole Nationale des Metiers E.D.F., Gurcy-le-Chatel - Donnemarie-Dontilly, France (77520)
Filed Jan. 6, 1981, Ser. No. 223,012
Claims priority, application France, Jan. 11, 1980, 80 00867
Int. Cl.[3] B60R *21/10*
U.S. Cl. 280—801 **6 Claims**

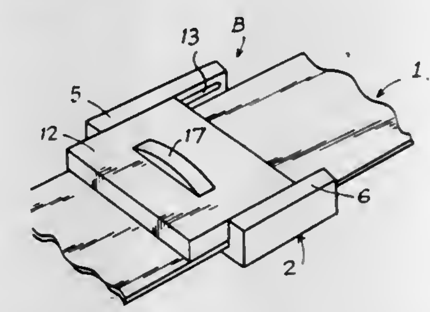

1. In a tension stop for safety belts of the inertia reel type, comprising, on the one hand, a support piece defining a passage for a belt and, on the other hand, a mobile blocking piece adapted to free the passage completely or to project herein to clamp and tighten the belt against the support piece,
the support piece is in the form of a "U" comprising a base with two transverse edges and two raised edges defining the passage with the base, said raised edges being provied with means for retaining the blocking piece and guiding said piece towards a position disengaged with respect to the passage or towards a position projecting inside said passage, and wherein at least one transverse edge is inclined with respect to the axis of slide of the belt in the passage to provide support against the perimeter of a slit through which the safety belt passes,
the blocking piece is constituted by a plate comprising:
means for cooperation with the retaining and guiding means;
an inner clamping face opposite and at a shallow angle to the inner face of the base of the support piece for tightening and clamping the belt between the inner face of the base and the clamping face; and
an outer face provided with an actuating member.

4,371,193
BELT ANTI-SLIP DEVICE FOR VEHICLE SAFETY BELT SYSTEMS
Juichiro Takada, 3-12-1, Shinmachi, Setagayaku, Tokyo, Japan
Filed Oct. 8, 1980, Ser. No. 195,581
Claims priority, application Japan, Oct. 11, 1979, 54-140995; Feb. 18, 1980, 55-018463
Int. Cl.[3] B60R *21/10*
U.S. Cl. 280—806 **9 Claims**

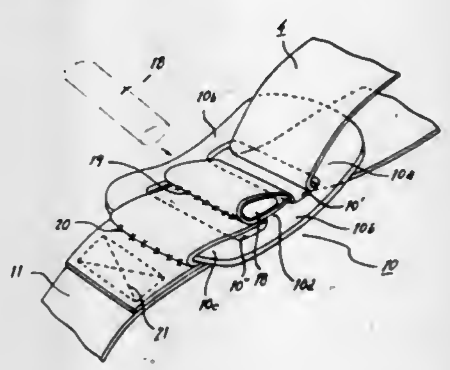

1. In a vehicle occupant restraint belt system having a D-ring, a control belt, and a restraint belt, the D-ring including a reflex section partitioning the restraint belt into a shoulder belt section and a lap belt section by passing of the restraint belt through a restraint belt opening in the D-ring and reflexion of the restraint belt from one section to the other, two side sections being connected to each end of the reflex section, an end section at the end of the D-ring opposite the reflex section closing the side sections, and a bridge section bridging the two side sections and forming a restraint belt opening between the bridge section and the reflex section, and a control belt opening between the bridge section and the end section, the improvement of a restraint belt anti-slip device comprising a portion of the control belt being reflexed back on itself to define a U-shaped loop passing through the restraint belt opening in the D-ring, temporary holding means for temporarily holding the control belt loop away from the restraint belt opening in the non-locking position, and a lock member inserted into the control belt loop, the loop and lock member being transferable between a non-locking position and a locking position by tension forces applied through the control belt of a predetermined amount so as to overcome the means for temporarily holding the lock member in the non-locking position, so that when the lock member is in the locking position the lock member wedges in the restraint belt opening against the restraint belt and prevents the lap portion of the restraint belt from passing through the restraint belt opening to the shoulder belt portion.

4,371,194
UNIVERSAL BINDING FOR MAKING VARIABLE SIZED BOOKS AND REPORTS
James C. Wang, Libertyville; Donald Murfitt, Glenview; Paul H. Livingston, Hoffman Estates, and Luis K. Joson, Lincolnwood, all of Ill., assignors to General Binding Corporation, Northbrook, Ill.
Filed Jun. 24, 1980, Ser. No. 162,507
Int. Cl.[3] B42D *3/00;* **B42C** *9/00*
U.S. Cl. 281—21 R **19 Claims**

1. A book cover structure of the type having front and back covers and sheets bound therebetween, the improvement of a backbone area joined with the front and back covers, the backbone area before binding initially having parallel strips of hot melt adhesive thereon and ribbed rows of hot melt adhesive with each ribbed row alternated with one of said strips of hot melt adhesive across the width of a backbone area, and spaced score lines located between said parallel strips and said ribbed rows in parallel relation relative to one another to enable the front and back covers to be flexed along selectable score lines relative to the backbone area, said ribbed rows of

hot melt adhesive and said strips after being heated comprising means holding said sheets in bound engagement with said backbone area, said ribbed rows of hot melt adhesive initially

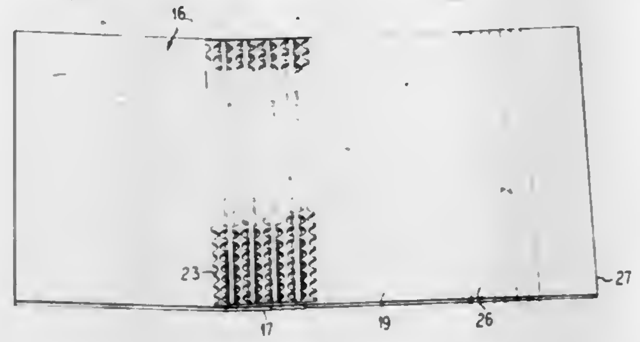

extending across the score lines and thus providing adhesive over the associated score line, the covers being folded at a pair of said score lines relative to said backbone area.

4,371,195

COVER WITH ADHESIVE BRIDGES IN SCORED AREAS

James C. Wang, Libertyville; Donald Murfitt, Glenview, and Paul H. Livingston, Hoffman Estates, all of Ill., assignors to General Binding Corporation, Northbrook, Ill.

Filed Jun. 24, 1980, Ser. No. 162,608

Int. Cl.³ B42D *3/00;* **B42C** *9/00*

U.S. Cl. 281—21 R **14 Claims**

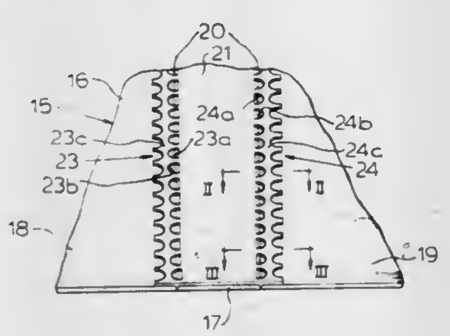

1. A book cover structure of the type having a backbone with front and back covers connected to the backbone and separated from the backbone by spaced parallel score lines to enable the front and back covers to flex relative to the backbone, the improvement comprising a backbone strip of hot melt adhesive being secured on an inside face area of said backbone and means for positioning sheets in engagement with said backbone comprising a pair of cover strips of hot melt adhesive secured to inside surface areas of the front and back covers in spaced adjacency to the score lines, and bridge means of hot melt adhesive extending between adjacent strips and across said score lines, said bridge means having substantially reduced adhesive thickness at, and over said score lines.

4,371,196

SECURITY FILAMENT AS PROTECTION AGAINST FRAUD

Walter von Kempski, Leverkusen, and Fritz Kirstein, Cologne, both of Fed. Rep. of Germany, assignors to Agfa-Gevaert Aktiengesellschaft, Leverkusen, Fed. Rep. of Germany

Filed Mar. 27, 1981, Ser. No. 248,471

Claims priority, application Fed. Rep. of Germany, Apr. 3, 1980, 3013238

Int. Cl.³ B42D *15/00*

U.S. Cl. 283—7 **8 Claims**

1. In combination,

a thread having longitudinal grooved and raised portion surface formations,

formed into the circumference of the longitudinal thread and providing a visibly identifiable cross-section in said thread,

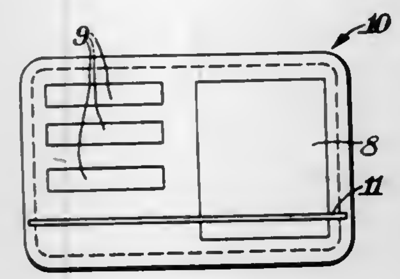

said surface formations extending longitudinally of said thread along a substantial part of its length,

and a card carrying said thread in a visible position.

4,371,197

PIPELINE FOR CONVEYING HOT OR COLD FLUIDS

Gilbert Chabrier, Montmorency, France, assignor to Spie-Batignolles, Puteaux, France

Filed Dec. 16, 1980, Ser. No. 217,181

Claims priority, application France, Dec. 27, 1979, 79 31780

Int. Cl.³ F16L *11/12, 35/00, 9/22*

U.S. Cl. 285—47 **3 Claims**

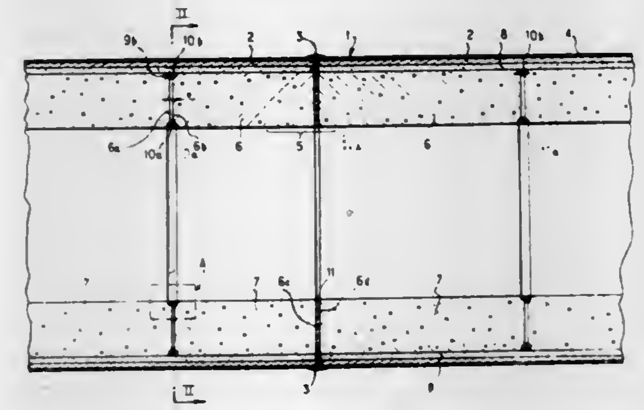

1. In a pipeline for conveying hot or cold fluids having metallic and rigid tubes (2), assembled directly end to end, a covering (5) of heat-insulating material formed as sleeves (6) made on the basis of a cement filled with thermically insulating inorganic particles, with said covering being disposed at the interior of said tubes (2) and in direct contact with the fluid conveyed by the pipeline, the improvement comprising: a thickness of said covering (5) of heat-insulating material which is determined in such a way that the expansion or contraction of the tubes (2) upon the introduction of a hot or cold fluid remains compatible in said pipeline with the mechanical resistance of the tubes, and an outer diameter of the sleeves (6) of slightly smaller size than the inner diameter of the tubes (2), with the annular space between said tubes (2) and said sleeves (6) being filled by a sealing material (8), injected under pressure, and being more elastic than the material of the sleeves.

4,371,198

APPARATUS FOR CONNECTING TUBULAR MEMBERS

Charles F. Martin, P.O. Box 197, Porter, Tex. 77365

Division of Ser. No. 738,609, Nov. 3, 1976. This application Mar. 28, 1980, Ser. No. 135,087

Int. Cl.³ F16L *27/06*

U.S. Cl. 285—165 **28 Claims**

1. A connection apparatus for connecting first and second tubular members comprising:

a female body having a passageway therethrough and first and second ends defining first and second end openings, said female body having an internally formed bearing surface, the second end of said female body being adapted to be connected to said second tubular member;

a male body having a passageway therethrough and first and second ends, said male body having an externally formed bearing surface, said first end of said male body being adapted to be connected to said first tubular member, said second end of said male body being received in said first end opening of said female body;

force imparting means disposed between said male and female bodies selectively operate to force said male body into said female body, said force imparting means com-

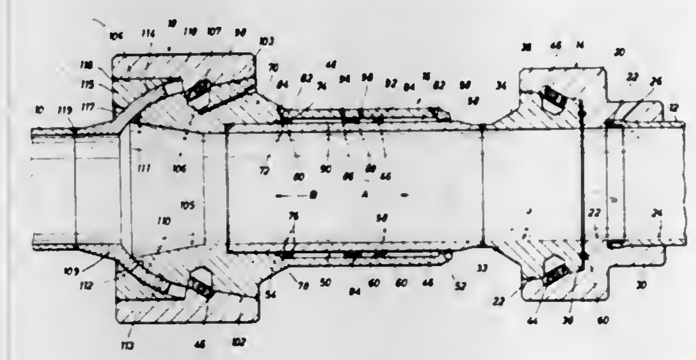

prising toggle joint said toggle joint including first and second toggle arms, each of said toggle arms having a free end, said toggle joint being movable between a first position in which said first and second arms are at a first angle to one another to a second position in which said first and second arms are at a second, larger angle to one another, and the free end of said first arm is in engagement with said internally formed bearing surface in said female body and the free end of said second arm is in engagement with said externally formed bearing surface on said male body.

4,371,199

CRIMPED TUBE JOINT

Gerald J. Kushner, Louisville, and Edward Raleigh, Fern Creek, both of Ky., assignors to General Electric Company, Louisville, Ky.

Division of Ser. No. 117,326, Jan. 31, 1980, Pat. No. 4,330,924. This application Jul. 31, 1981, Ser. No. 288,962

Int. Cl.³ F16L *13/14*

U.S. Cl. 285—382.2 **2 Claims**

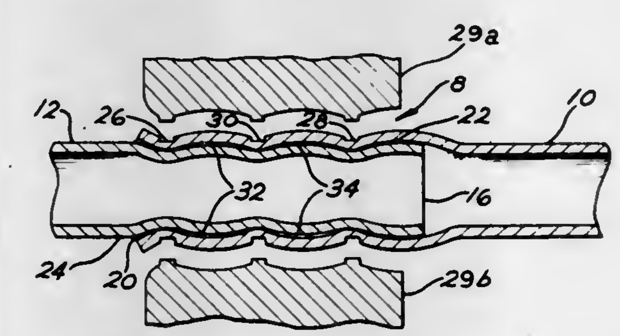

1. A tube joint comprising:

a first tube having an end portion dimensioned to receive the end portion of a second tube with radial clearance between the contiguous surfaces to be joined;

a first portion of the end portion of said second tube being coated with an ambient temperature curable adhesive;

a second portion of the end portion of said second tube in an area between said adhesive and the free end thereof is provided with a cured resilient sealer;

a plurality of grooves including a pair of axially spaced end grooves and a central groove intermediate said spaced end grooves being formed in the outer surface of a portion of the first tube that overlaps said second tube, the portion of said first tube which underlies said grooves extending radially inwardly a distance sufficient to reduce the diameter of said first tube and cause said first tube to grip said second tube to reduce to substantially zero thickness the sealer and adhesive beneath said grooves;

a first pocket located between one of said end grooves and said central groove for containing said sealer to form a first instant sealing area and a second pocket located between the other of said end groove and said central groove for containing said curable adhesive forming a second permanent sealing area after said adhesive has cured.

4,371,200

WIRE GATE LATCH

Thomas M. Porter, Halliday, N. Dak. 58636

Filed Jan. 16, 1981, Ser. No. 225,620

Int. Cl.³ E05C *3/12*

U.S. Cl. 292—99 **4 Claims**

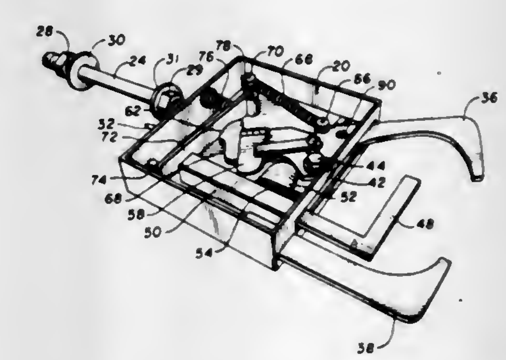

1. A wire gate latch comprising:

a housing having a horizontal slot through one side thereof;

means for mounting said housing to a fixed post;

a first arm extending outwardly from said slotted side of the housing;

a second arm, pivotably mounted in said housing and extending outwardly through said slot, said second arm having a hooked end extending toward said first arm and further having a first position wherein said arms and housing side define an enclosure for engaging a post, and a second position pivotably displaced further from said first arm than said first position, whereby an opening is formed in said enclosure for receiving or releasing said post;

a slidable actuating bar within said enclosure extending into said housing;

first spring means associated with said actuating bar for urging said bar outwardly from said housing into said enclosure;

cam means within the housing associated with said actuating bar for moving said second arm from the second position to the first position when the actuating bar is partially depressed into the housing;

pawl means associated with a notch in the second arm for retaining the second arm in the first position, said pawl means in cooperative alignment with the actuating bar such that the actuating bar releases said pawl means from said notch when the bar is depressed further into the housing; and

second spring means associated with said second arm for urging the second arm toward the second position when said pawl means is released from said notch.

4,371,201

REVERSING RATCHET DOOR CLOSER

Arthur J. Stock, Lakewood, and Donald S. Christopher, Willowick, both of Ohio, assignors to Stock Equipment Company, Cleveland, Ohio

Filed Sep. 26, 1980, Ser. No. 190,962

Int. Cl.³ E05C *5/04*

U.S. Cl. 292—251 **5 Claims**

1. A reversing ratchet drive for turning a fastener selectively in clockwise and counterclockwise directions about a lever axis, comprising:

a lever supported for pivotal movement about said axis;

a housing defining a bore coaxial with said lever axis;
a drive head integral with said fastener received within said bore and having radial external ratchet teeth;
a double pawl pivotally mounted in said housing for movement between forward drive and reverse drive engagement with said external ratchet teeth and having an intermediate disengaged position;
said lever comprising a handle assembly having an inner end received in said housing for turning movement therein about a twist axis perpendicular to said lever axis, said

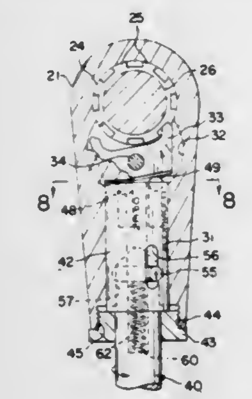

handle assembly being adapted to turn said housing about said lever axis;
means carried by said inner end of said handle assembly for moving said double pawl to its forward drive position when said handle assembly is twisted about its twist axis in one direction and to its reverse drive position when said handle assembly is turned about its twist axis in the opposite direction; and
means for biasing said handle to a neutral position between said two directions of twist wherein said pawl is in said disengaged position.

4,371,202
LAMINATED CLEVIS PIN
Timothy J. Freeman, 3772 River La., Rocky River, Ohio 44116; William J. Goler, 4186 W. 192 Ct., Country Club Hills, Ill. 60472, and Kenneth J. Humberstone, 3047 Lander Rd., Pepper Pike, Ohio 44124
Filed Dec. 22, 1980, Ser. No. 218,647
Int. Cl.³ B66C *1/34;* F16G *15/00*
U.S. Cl. 294—82 R **6 Claims**

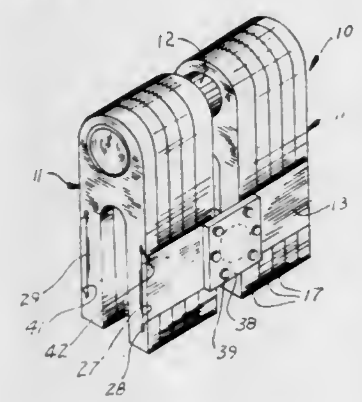

1. A clevis holding a pair of pins, away from their midlengths, in perpendicular planes, the clevis including a pair of apertured units being assembled on a first of said pins by receiving end portions of said first pin in their respective apertures, a pair of spaced spreader bars parallel to said first pin disposed on opposite sides of said units, said spreader bars each having an aperture aligned with that of the other and in the plane of the midlength of said first pin, a second pin having its end portions supported in said spreader bar apertures, said units and spreader bars being constructed and arranged in a manner whereby said pins when received in their respective apertures are sufficiently unobstructed at their midportions to receive a hook or like device for transmitting loads between said pins, said units each being formed by a plurality of separate laminations stacked in planes perpendicular to said first pin, said spreader bars engaging each of said laminations in a manner which permits loading on said pins to be distributed to each of said laminations.

4,371,203
UNIVERSAL BEAM CLAMP
Donald C. Munro, P.O. Box 389, Grand Blanc, Mich. 48439
Filed Jul. 13, 1981, Ser. No. 282,851
Int. Cl.³ B66C *1/64*
U.S. Cl. 294—86 R **9 Claims**

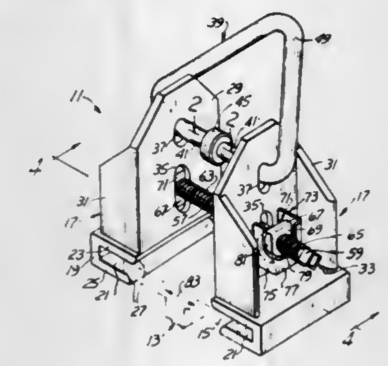

1. A universal beam clamp for supportably engaging the top flange of an I-beam comprising of a pair of opposed symmetrical clamp elements, each clamp element including an elongated base having an elongated inwardly opening top flange receiving slot along its inner edge;
an upright support plate mounted upon and secured to said base along said edge;
there being aligned upright elongated first and second slots centrally of said support plate;
an adjusting screw extending transversely of said support plates through said first slots, said screw having separate right and left hand threads and a polygonal wrench engaging end;
a pair of nuts mounted on each of said threads outwardly of said support plates;
a nut retainer on said support plate outwardly thereof receiving a nut retaining it against rotation;
rotation of said screw in one direction simultaneously drawing said clamp elements together for gripping the I-beam flange therebetween, rotation of said screw in the opposite direction separating said clamp elements;
and a clamp element support having a base projected through said second slots and an apex overlying said support plates adapted for connection to a crane operated lift hook.

4,371,204
PIVOTAL ROOF VENT PANEL APPARATUS
Richard D. George, Brownstown, and Gary L. Vanhulle, Woodhaven, both of Mich., assignors to Skytrends, Inc., Warren, Mich.
Filed Nov. 19, 1980, Ser. No. 208,146
Int. Cl.³ B60J *7/08*
U.S. Cl. 296—218 **11 Claims**

1. A pivotal roof vent apparatus for a vehicle having an opening in the roof thereof comprising:
a frame adapted to be secured around the periphery of said opening in the roof of said vehicle;
a roof vent panel pivotally connected at a front edge to said frame;
a latch connected to the rear edge of said roof vent panel, said latch being operative to move said roof vent panel between a first position wherein the rear edge of said roof vent panel extends above said roof opening and a second

position wherein said roof vent panel closes said roof opening, said latch comprising:
a first link connected to said rear edge of said roof vent panel;
a second link pivotally connected to said first link at a first end;
means, connected to the opposed end of said second link, for removably attaching said opposed end of said second link to said frame; and

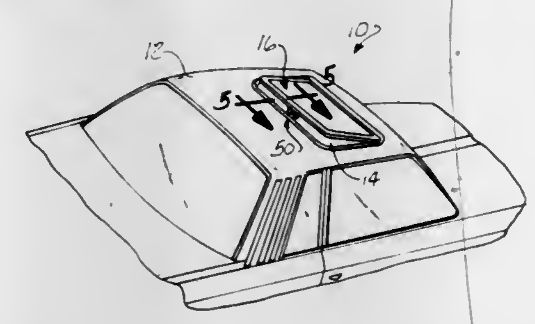

means carried by said first and second links for releasably locking said latch in the first venting position, said locking means comprising:
an aperture formed in said second link;
a biased pin carried by said first link, said pin releasably engaging said aperture in said second linking when said latch is moved to said first venting position for releasably locking said latch in said first venting position and being urged against the biasing force to disengage from said aperture when said first link is urged from the extended venting position.

4,371,205
DOOR LOCK
John R. Kaveney, Jr., East Peoria, Ill., assignor to Caterpillar Tractor Co., Peoria, Ill.
PCT No. PCT/US80/00853, § 371 Date Jul. 7, 1980, § 102(e) Date Jul. 7, 1980
PCT Filed Jul. 7, 1980, Ser. No. 250,753
Int. Cl.³ E05C *3/06*
U.S. Cl. 292—48 **10 Claims**

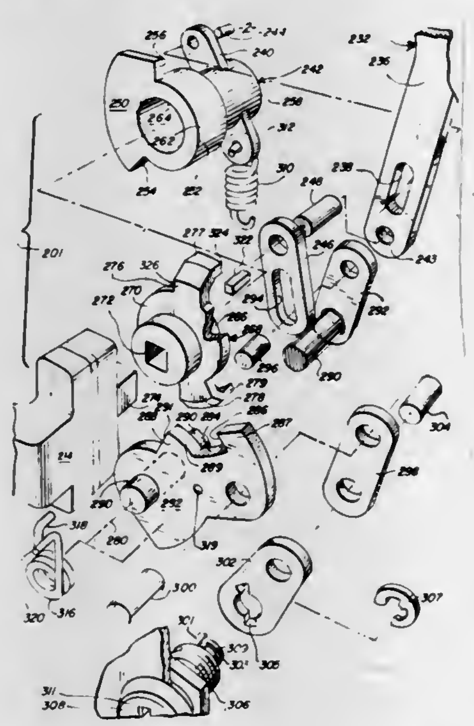

1. A lock and linkage assembly for a door for a vehicle having a latch structure (**204**) for latching and locking said door, comprising first and second handle means (**214,202**) extending outwardly and inwardly from opposite sides of said door, said second handle means (**202**) being remote from the lock assembly and connected thereto by rod means (**216,232**), a cam element (**282**) rotatably mounted in said door, said cam element (**282**) having one portion (**286**) engaging with said first handle means (**214**) for preventing said first handle means (**214**) from being turned when said cam element (**282**) is in the locked position, a rotatable bellcrank (**242**) rotatably mounted in said door and operably connected to said rod means (**216,232**) and to said second handle means (**202**), said cam element (**282**) having a second portion (**288**) engaging with an abutment (**254**) on said rotatable bellcrank (**242**) when said cam element (**282**) is in said locked position, said second handle means (**202**) moving said rod means (**216,232**) and said rotatable bellcrank (**242**) to move said abutment (**254**) against said second portion (**288**) of the cam element (**282**) to move the first portion (**286**) of the cam element (**282**) out of engagement with the first handle means (**214**) and to move the cam element (**282**) to the unlocked position, said first and second handle means (**214,202**) are operative to unlatch the door when said cam element (**282**) is in the unlocked position.

4,371,206
ROCKABLE INFANT SEAT/CRADLE
Edward M. Johnson, Jr., Matteson, Ill., assignor to Kolcraft Products, Inc., Chicago, Ill.
Filed Feb. 17, 1981, Ser. No. 235,148
Int. Cl.³ A47C *1/02, 3/03;* A47D *13/10*
U.S. Cl. 297—183 **6 Claims**

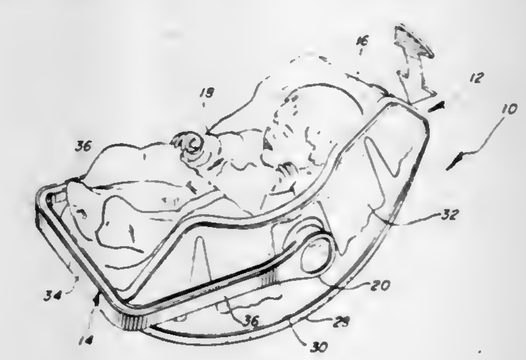

1. A rockable infant seat/cradle comprising:
a body-receiving and supporting shell, said shell having an elongated bottom surface and opposed sidewalls, the lowermost edges of said sidewalls being curved along the length thereof to support said shell on an associated support surface while permitting rocking movement thereof relative to such surface;
generally U-shaped handle means having elongated leg portions rotatably secured to opposite sides of said shell;
gear means to effect manual rotation of said handle means to various positions relative to said shell, thereby to permit carrying said shell or to position said shell in rockable or various fixed positions relative to the underlying associated support surface; said gear means including a gear fixedly secured to the distal end of each leg portion of said handle, each said gear having a plurality of axially extending teeth; a gear-retaining ring affixed to the respective opposed sidewall of said shell, said retaining ring including a plurality of axially extending apertures therethrough, through which said gear teeth normally extend, thereby to lock said handle in a fixed position relative to said shell;
and means for normally biasing the respective gears and the handle legs to which said gears are secured in an engaged position wherein the gear teeth extend through the gear ring apertures, the gears being axially displaceable relative to said gear-retaining rings to space the distal ends of said gear teeth axially of the gear ring apertures whereby the handle may be rotated about the axes thereof to permit selective rotatable movement of said handle means relative to said shell.

4,371,207

POSITION ADJUSTER FOR MOTOR VEHICLE SEATS AND WINDOWS

Hans Wilking, Rothselberg, and Egon Kafitz, Hochspeyer, both of Fed. Rep. of Germany, assignors to Keiper Automobiltechnik GmbH & Co. KG, Remscheid, Fed. Rep. of Germany

Filed Mar. 31, 1981, Ser. No. 249,342

Claims priority, application Fed. Rep. of Germany, Apr. 5, 1980, 3013304

Int. Cl.³ A47C *1/025;* **F16H** *55/18*

U.S. Cl. 297—348 **14 Claims**

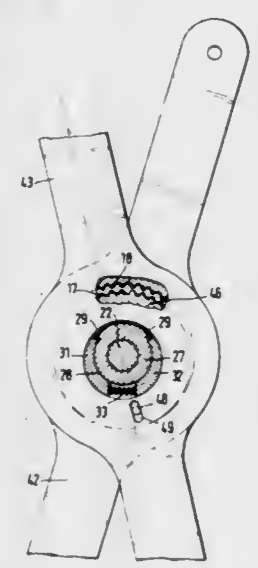

1. A position adjuster for seats and/or windows, particularly in motor vehicles, comprising two mount levers, a rotary shaft for interconnecting said levers, an inner gear connected to one lever and a spur gear ring connected to the other lever and being in mesh with said inner gear, the crown circle of said spur gear ring being smaller at least about one tooth than the root circle of said inner gear, an eccentric arranged for joint rotation with said shaft and supporting one of said gears to impart a wobbling movement thereto, said eccentric including a carrier disk connected to said rotary shaft, a pair of wedge-like segments supported one after the other for movement on a major portion of the circumference of said carrier disk, and a resilient pressure means arranged between said segments to urge the same one from the other into a locking position in which radial play between the assigned gear and said carrier disk is eliminated, whereby during the rotation of said shaft said segments are displaced towards each other against said pressure means to permit a radial play between said gear and said carrier disk.

4,371,208

GATE PANEL OPERATOR FOR SIDE DUMPING VEHICLES

Stanley S. Stricker, 915 K St., Gering, Nebr. 69341

Filed Apr. 13, 1981, Ser. No. 253,199

Int. Cl.³ B60P *1/04*

U.S. Cl. 298—23 D **15 Claims**

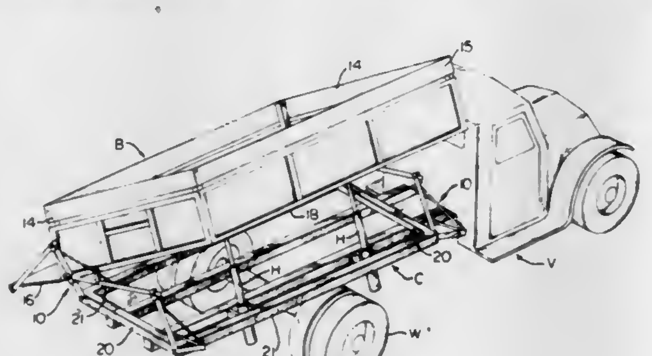

1. In a side dumping vehicle wherein a dump box is supported on a frame of the vehicle, said dump box having opposite side and end panels, one of said side panels pivotally mounted about its lower end for swinging movement between an open and closed position when said dump box is advanced between an inclined dumping position and a level position, respectively, the combination therewith of a panel operator disposed at least at one end of said dump box extending substantially at right angles to said one side panel comprising:

first and second lever arm members pivotally connected to said frame in spaced-apart relation to one another for upward extension therefrom;

limit stop means associated with one of said lever arms;

pivotal connecting means pivotally interconnecting said first and second lever arms in spaced relation above their points of pivotal connection to said frame; and

a connector arm pivotally interconnecting one of said first and second lever arm members to the upper end of said one side panel whereby tilting movement of said dump box is operative to initiate pivotal movement of said first and second lever arm members while permitting upward movement of said limit stop means, said lever arm members being so constructed and arranged that the relative velocity of said one lever arm member interconnected to said side panel is greater than that of the other of said first and second lever arm members to advance said side panel into the open position independently of the side pressure exerted by the load carried in said dump box.

9. A dump vehicle wherein a dump box is supported on a frame of said vehicle and has opposite side and end panels, one of said panels pivotally mounted about its lower end for swinging movement between an open and closed position when said dump box is advanced between an elevated dumping position and a lowered level position, respectively, a linkage mechanism extending substantially at right angles to said pivotally mounted panel comprising:

a bell crank pivotally connected to said frame having a first laterally extending control arm provided with limit stop means engageable by the underside of said dump box and an upwardly extending lever arm movable independently of said dump box when said dump box is elevated; and

motion amplifying means pivotally connected to said frame in laterally spaced relation to said bell crank including means pivotally interconnecting said bell crank and said motion amplifying means and a connector arm pivotally interconnecting said motion amplifying means to the upper end of said panel, said motion amplifying means being operative to accelerate movement of said hinged panel relative to tilting movement of said dump box and pivotal movement of said bell crank so as to positively open said hinged panel independently of side pressure exerted by the load in said dump box.

4,371,209

MINING MACHINE STEERING EQUIPMENT

Derek Alford, and Alan Wilkinson, both of Burton-on-Trent, England, assignors to Coal Industry (Patents) Limited, London, England

Filed Dec. 22, 1980, Ser. No. 219,193

Claims priority, application United Kingdom, Feb. 1, 1980, 8003503

Int. Cl.³ E21C *35/10, 35/24*

U.S. Cl. 299—1 **27 Claims**

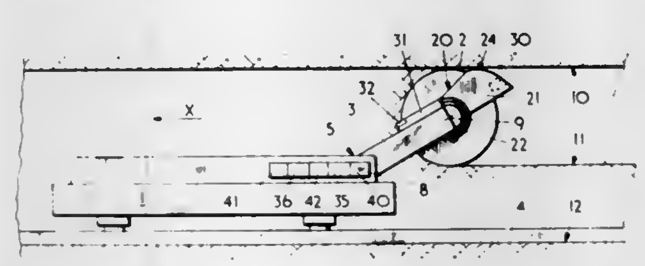

1. Mining machine steering equipment for use with a mining machine including a cutter drum or head mounted on a ranging arm for movement between two operational positions, comprising a component having two operational modes associated with the two operational positions of the cutter drum or head, respectively, actuator means for urging the component into one or other of the two operational modes, and sensor means for sensing the angular position of the component with respect to the arm and for deriving a signal indicative of the sensed angular position of the component.

4,371,210

FREELY ROTATABLE PICK BIT HOLDER ON ROTARY DRIVEN MEMBER AND METHOD

Donald L. Leibee, Bedford, Pa., assignor to Kennametal Inc., Latrobe, Pa.

Continuation of Ser. No. 61,190, Jul. 27, 1979, abandoned, which is a continuation of Ser. No. 894,736, Apr. 10, 1978, abandoned. This application Jun. 2, 1981, Ser. No. 269,553

Int. Cl.³ E21C *27/24, 35/18*

U.S. Cl. 299—10 **9 Claims**

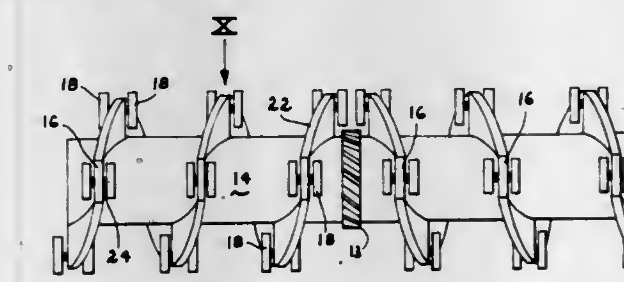

1. A method of reducing coal formations utilizing elongate pick type mining bits having an attack point at one end, wherein said method comprises the steps of: mounting in a readily releasable manner said pick type mining bits on the periphery of a support member which is freely rotatable through 360 degrees about an axis; inclining said bits toward a first direction of rotation with respect to said axis; and translating said releasably mounted bits across the formation to be reduced in a direction transverse to said axis; impacting the formation with said bits, thereby causing a frictional force to act upon said bits; and then rotating due to said frictional force said freely rotatable support member in a second direction of rotation about said axis opposite to said first direction of rotation.

4,371,211

TUNNEL BORING MACHINE AND METHOD OF OPERATING SAME

Larry L. Snyder, Twinsburg, Ohio, assignor to Jarva, Inc., Solon, Ohio

Filed Dec. 11, 1980, Ser. No. 215,221

Int. Cl.³ E21D *9/10*

U.S. Cl. 299—11 **7 Claims**

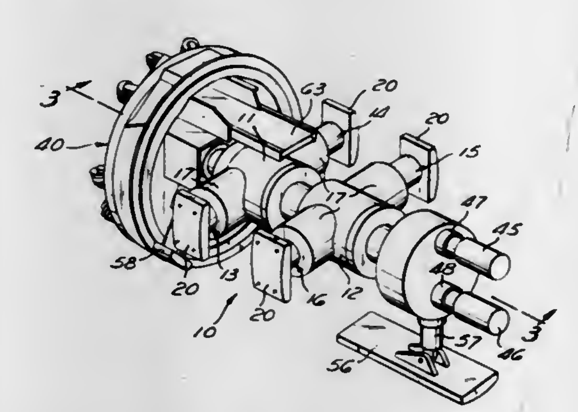

7. The method of advancing a tunneling machine along a tunnel bore, said tunneling machine having a main frame supporting a cutter head rotatable about an axis parallel to the tunnel axis and a pair of support frames each adapted to independently and selectively grip the tunnel wall and mounted for movement along the tunnel axis independently of the main frame and each other, comprising the steps of:

(1) causing one support frame to grip the tunnel wall while applying thrust between said one support frame and said main frame,

(2) after said cutter head has advanced a given distance causing said other support frame to grip the tunnel wall and applying thrust between said other support frame and said main frame,

(3) thereafter releasing said one support frame from the tunnel wall and advancing it along said main frame towards said cutter head,

(4) after said cutter head has advanced a given distance causing said one support frame to grip the tunnel wall and applying thrust between said one support frame and said main frame,

(5) reducing the thrust between each support frame and the main frame in half when thrust is applied between both support frames and said main frame simultaneously, whereby the thrust of said cutter head along said tunnel axis remains substantially constant through steps (1) through (6), and

(6) thereafter releasing said other support frame from the tunnel wall and advancing it along said main frame towards said cutter head,

whereby said cutter head is continuously advanced along the tunnel axis during steps (1) through (6).

4,371,212

WHEEL RIM BOLT ATTACHMENT

Jakob Rohr, Schaffhausen, Switzerland, assignor to George Fischer Aktiengesellschaft, Switzerland

Filed May 8, 1980, Ser. No. 148,165

Claims priority, application Switzerland, Sep. 5, 1979, 4343/79

Int. Cl.³ B60B *23/10*

U.S. Cl. 301—9 DN **5 Claims**

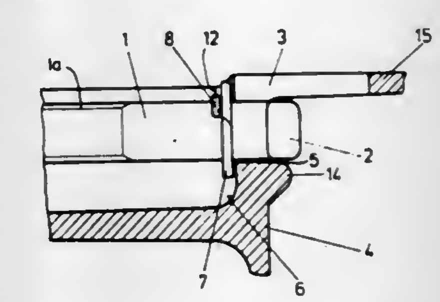

1. An improved apparatus for attaching a wheel rim to a wheel body on a vehicle, such as a truck or bus, the wheel body being of the type having a plurality of support means around the periphery of the wheel body, each support means including a first wall lying in a plane substantially perpendicular to the wheel axis, a second wall extending perpendicularly from said first wall, and means defining a continuous, generally L-shaped slot extending into both of said walls, the apparatus including a T-head bolt, said slot being dimensioned to permit passage of the smaller dimension of the T-head therethrough but to prevent passage of the larger dimension of the head, so that the head can be inserted through the slot and rotated 90° to bring the bottom surfaces of the head into contact with the inner sides of the first wall on both sides of the slot, the improvement comprising

a washer;

said first wall including means defining a first shoulder on one side of the slot and a second shoulder on the other side of said slot, said shoulders being adjacent the juncture of said first and second walls and engageable with said washer for positioning thereof and being spaced apart by a dis-

tance less than the outer diameter of said washer, the height of said first shoulder being greater than the thickness of said washer and the height of said second shoulder being less than the thickness of said washer;

said bolt including means defining a diametral hole through said bolt spaced from the bottom surfaces of said head by a distance substantially equal to the combined thicknesses of said first wall and said second shoulder, the axis of said hole being angularly offset from the longer dimensions of said head; and

fastener means insertable through said hole for preventing said washer from moving axially along said bolt away from said first wall.

4,371,213

EDGE LUGGED TIRE CARRYING RIM AND WHEEL

William D. Walther, Kettering, Ohio, assignor to Dayton-Walther Corporation, Dayton, Ohio

Filed May 9, 1977, Ser. No. 795,063

Int. Cl.³ B60B *23/10*

U.S. Cl. 301—12 R **2 Claims**

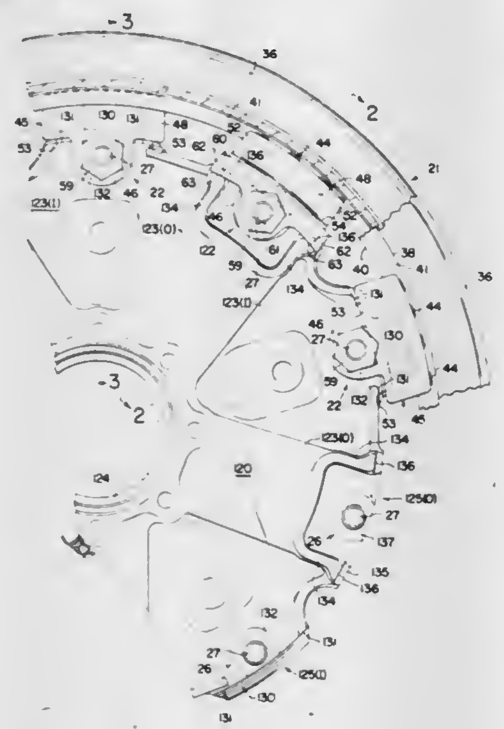

1. A combination of dual inner and outer tire carrying rims mounted on a vehicle wheel, said outer rim being seated and locked on said rim by fastening assemblies,

said wheel having a plurality of inner and outer spoke members, each said outer spoke member having a felloe comprising spaced-apart axially projecting wing portions providing for outwardly facing axially inner and axially outer pairs of dual axially oriented surfaces and a radially directed surface extending inwardly between said dual axially oriented surfaces substantially perpendicular to the rotational axis of said wheel and providing a mounting location for an axially projecting component of said fastening assemblies,

said outer rim having a rim base edge portion comprising a radially inclined axially inner surface and an adjacent axially outer surface, said rim base edge portion having a plurality of radially inwardly projecting clamp lugs intergrally secured thereto,

each said clamp lug being generally T-shaped and having a radially outer curved body portion with a radially outer face comprising a radially inclined axially inner surface and an adjacent axially outer surface, said radially inclined and axially outer clamp lug face surfaces being in mating engagement with said radially inclined and axially outer rim base edge portion surfaces when each said clamp lug is integrally secured to said rim base edge portion,

each said clamp lug further having a radially inwardly directed leg portion extending inwardly from said curved body portion and defining the plane of a substantially continuous axially facing surface oriented substantially perpendicular to the rotational axis of said rim and having a bore therein for receiving said axially projecting component of said fastening assemblies,

each said curved body portion further having lateral wing portions providing downwardly facing dual axially oriented surfaces,

each said curved body portion still further having a radially inner face adjacent said leg portion and comprising a radially inclined axially inner surface intersecting an axially directed transitional surface terminating at said leg portion,

each said fastening assembly comprising said axially projecting component and a clamp element supported thereon, each said clamp element having lateral wing portions providing downwardly facing dual axially oriented surfaces, an axially inwardly directed member and a radially outer portion with a radially inclined surface,

whereby, said outer rim is seated on, and therafter locked on, said wheel by initial and final tightening of said fastening assemblies, said initial tightening of said fastening assemblies with said axially inwardly directed clamp element members in mating engagement with said clamp lug leg portions and said dual axially oriented surfaces on said lateral wing clamp element portions in mating engagement with said axially outer pair of dual wheel felloe surfaces and said dual axially oriented surfaces on said lateral wing clamp lug portons in radially registered engagement with said axially inner pair of dual wheel felloe surfaces, seating said radially inclined clamp lug body portions in concentric registry with said radially inclined clamp element surfaces; said final tightening of said fastening assemblies to apply a load for axial movement of said clamp lug leg portions locking said outer rim on said wheel by the full surface engagement of said substantially continuous axially facing surfaces on said clamp lug leg portions with said radially directed wheel felloe surfaces and the elastic deformation of said clamp lugs and said rim base edge portion relative to said substantially perpendicular plane of said radially directed wheel felloe surfaces.

4,371,214

BEARING HUB AND CARRIER ASSEMBLY FOR A DRIVEN STEERING WHEEL UNIT

Don S. Strader, Lansing, Mich., assignor to Motor Wheel Corporation, Lansing, Mich.

Filed Nov. 17, 1980, Ser. No. 207,349

Int. Cl.³ B60B *35/18*

U.S. Cl. 301—126 **6 Claims**

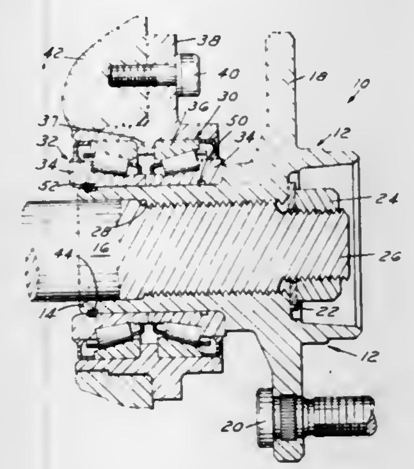

1. For use in a driven steering wheel unit as in a front wheel drive vehicle, a bearing hub and carrier assembly comprising a hub including an internally splined spindle adapted to receive a splined drive shaft and an integral flange radiating from one end of said spindle for mounting of a vehicle wheel, at least one bearing means having an inner race telescopically received over said spindle and an outer race, a cup carrier mounted to said outer race externally of said spindle for mounting said assembly to a vehicle and means for locking said hub against axial removal with respect to said bearing means and said cup carrier, said locking means comprising a first circumferential groove formed on said spindle adjacent the flange-remote end thereof, a second circumferential groove formed in said inner race in radial alignment with said first circumferential groove, a third groove on said spindle at an intersecting acute angle with respect to said first groove and opening at said flange-remote end of said spindle, a fourth groove formed in the outer spindle surface at an angle intersecting said third groove at said flange-remote end of said spindle, and a one-piece retaining wire received in said aligned first and second grooves surrounding said spindle for preventing axial displacement of said first and second grooves out of radial registry, an end of said wire extending through said third groove which functions as a wire feed groove and then into said fourth groove which functions as a locking groove for locking said wire against rotation with respect to said spindle and affording access to said wire at the intersection of said feed and locking grooves for removing said wire in disassembly.

4,371,215

DUAL TYPE HYDRAULIC CIRCUIT IN A VEHICLE BRAKE SYSTEM

Hiroshi Kawaguchi, Mishima, Japan, assignor to Toyota Jidosha Kabushiki Kaisha, Aichi, Japan

Continuation of Ser. No. 961,603, Nov. 17, 1978, abandoned. This application Dec. 31, 1980, Ser. No. 221,569

Claims priority, application Japan, Nov. 17, 1977, 52-138334

Int. Cl.³ B60T *8/18*

U.S. Cl. 303—22 R **4 Claims**

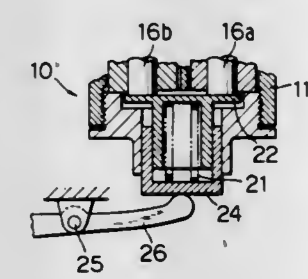

1. A dual type hydraulic circuit for a vehicle brake system including (1) a dual master cylinder building up hydraulic braking pressure relative to the degree of depression of a brake pedal; (2) at least one wheel cylinder disposed at each of the right and left rear road wheels of the vehicle; (3) two mutually independent hydraulic piping systems which connect said dual master cylinder to said rear wheel cylinders; and (4) valve means incorporated in said two piping systems, said valve means comprising:

(a) a housing having two mutually independent fluid passages therein each of which constitutes a portion of said two hydraulic piping systems respectively;

(b) two valve seats formed one within each respective one of said one fluid passages;

(c) two valve pistons each having a valve poppet adapted to contact said corresponding valve seat, and being axially movable for bringing said valve poppet thereof onto and off of said corresponding valve seat, said valve pistons being disposed in parallel to one another and both being exposed at respective one ends thereof to an air chamber formed within said housing, with a result that, as long as said valve poppets are held in contact with said valve seats, the pressure-receiving areas of said valve pistons exposed to a portion of said fluid passages in communication with said rear wheel cylinders are greater than those of said valve pistons exposed to another portion of said passages in communication with said master cylinder;

(d) a compression spring urging said two pistons away from said air chamber;

(e) transmission means interposed between said two valve pistons and said spring for transmitting the resilient force of said spring to said two valve pistons to make them operate together and, upon rising of the hydraulic pressure in said master cylinder beyond a predetermined upper limit, the hydraulic braking pressure in said rear wheel cylinders being controlled to rise at a lower gradient than the hydraulic pressure in said master cylinder, said transmission means including a first portion disposed within said housing and slidable in parallel with a line of movement of said two valve pistons to cause the resilient force of said spring to act in parallel with said line and further including a second portion fixed to said first portion, which second portion is a plate-like configuration and is in contact with one end of said spring at the middle thereof to receive the resilient force of said spring, and in contact with said two pistons at opposite end portions thereof to evenly deliver said resilient force to said two pistons at said opposite end portions thereof; said end portions of said second portion extending outwardly of said first portion of said transmission means;

(f) said first portion of said transmission means comprising a hollow cylindrical member;

(g) a movable seat member, means to mount said movable seat member in contact with the other end of said spring and so as to permit said seat member to move substantially in parallel with said line of movement of said transmission means,

(h) said movable seat member comprising a bottom and a hollow cylindrical member, said movable seat cylindrical member being slidably mounted on the outside of and telescopically fitted to said transmission means first portion;

(i) said movable seat member bottom and said transmission means first portion defining a space in which said compression spring is housed; and

(j) means to move said movable seat member in response to variations of the load applied to said rear wheels;

whereby the axial movements of said valve pistons are controlled in accordance with the varying magnitude of the load applied to said rear wheels.

4,371,216

FLUID BEARING

Hiroshi Suzuki, Okazaki; Kunio Shibata, Kariya, and Kazuhiko Sugita, Anjo, all of Japan, assignors to Toyoda Koki Kabushiki Kaisha, Kariya, Japan

Division of Ser. No. 53,038, Jun. 28, 1979, Pat. No. 4,285,551. This application Dec. 5, 1980, Ser. No. 213,213

Claims priority, application Japan, Jul. 3, 1978, 53-80696; Jul. 3, 1978, 53-80697; Jul. 24, 1978, 53-90098; Aug. 2, 1978, 53-94427; Dec. 27, 1978, 53-161527; Dec. 27, 1978, 53-161528

Int. Cl.³ F16C *32/06*

U.S. Cl. 384—118 **2 Claims**

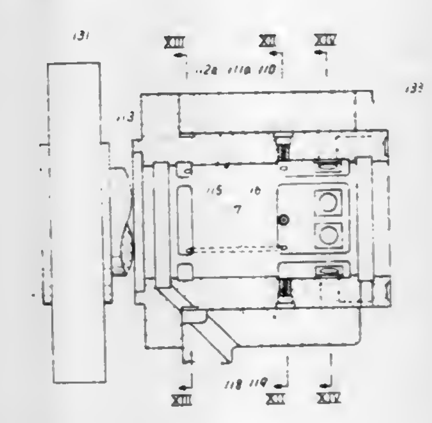

1. A fluid bearing for rotatably supporting a rotary shaft comprising:

a stationary housing;
a pair of bearing members fixedly and coaxially inserted in said housing from the opposite ends thereof, each bearing member having an internal bore which forms a bearing surface;
a plurality of pressure generating zones defined on each of said bearing surfaces in a circumferential direction;
a pair of axially spaced fluid pockets in each of said pressure generating zones, an axial width of one of said pair of fluid pockets which is located remote from the axially inner end of each bearing member being smaller than that of the other fluid pocket located near the inner end of each bearing member;
at least one raised land formed in at least one of said pair of fluid pockets in each of said pressure generating zones;
passage means for fluidically communicating said pair of fluid pockets with each other;
throttle means connected to said fluid pockets for admitting pressurized fluid in the same;
an exhaust port formed on said raised land for discharging pressurized fluid; and
exhaust means formed on each of said bearing surfaces outside said pressure generating zones for discharging pressurized fluid.

4,371,217

HYDROSTATIC SLIDING ELEMENT

Jozef Turza; Ondrej Kilik, and Jan Rusnak, all of Nova Dubnica, Czechoslovakia, assignors to Zavody tazkeho strojarstva, narodni podnik, Dubnica nad Vahom, Czechoslovakia

Filed Jun. 17, 1981, Ser. No. 274,412

Claims priority, application Czechoslovakia, Jun. 30, 1980, 4644-80

Int. Cl.³ F16C *17/00*

U.S. Cl. 308—5 R **3 Claims**

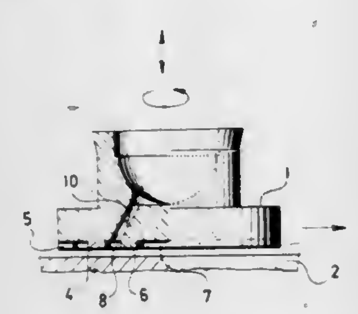

1. A hydrostatic sliding element consisting of a body, the sliding surface of which is formed by a packing ring, on a circumference of which there is disposed an auxiliary ring provided with intermittent grooves, the auxiliary ring being separated from the packing ring by means of a groove, a correction ring with a central correction recess, the correction ring being separated from the packing ring by a circular groove connected to inlets of pressure liquid.

4,371,218

BEARING MECHANISM

Michihiro Ichikawa, Kiryu, Japan, assignor to Ichikawa Iron Works Co., Ltd., Kiryu, Japan

Filed Dec. 29, 1980, Ser. No. 220,983

Claims priority, application Japan, Dec. 26, 1979, 54-180860

Int. Cl.³ F16C *39/06*

U.S. Cl. 308—10 **14 Claims**

1. A bearing mechanism for supporting an elongated rotary member having a center axis therethrough and rotatable about the center, the rotary member having at least one journal portion and at least one axial end portion, comprising a stationary support structure, at least one journal bearing assembly supported on said stationary support structure and engaging said journal portion for being operative to carry radial load from said rotary member, and a non-contact, magnetic thrust bearing unit which is stationary with respect to said support structure and which is positioned adjacent said axial end portion of said rotary member, said thrust bearing unit comprising a cylindrical member having an axial bore therein and positioned in substantially coaxially encircling relationship to said

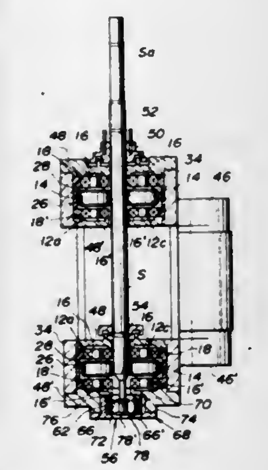

axial end portion of the rotary member, only one of said cylindrical member and said end portion of said rotary member being constructed of a magnet.

4,371,219

FLOATING BUSH AND OUTER BEARING STRUCTURE FOR MOUNTING A SHAFT IN A BODY ROTATABLY

Ken Yamane, Yokohama, Japan, assignor to Nissan Motor Company, Ltd., Yokohama, Japan

Continuation of Ser. No. 72,899, Sep. 6, 1979, abandoned. This application Feb. 3, 1981, Ser. No. 231,017

Claims priority, application Japan, Nov. 14, 1978, 53-140248

Int. Cl.³ F16C *33/66*

U.S. Cl. 384—291 **4 Claims**

1. A bearing structure which supports a rotating shaft in a body, said body being formed with a lubricant-conducting passage which supplies lubricant comprising:
a floating hollow-cylindrical bush supported loosely on the shaft with a clearance existing therebetween; and
a hollow-cylindrical bearing held in the body with a clearance existing therebetween, said clearance between said body and said bearing communicating with said lubricant-conducting passage so as to receive lubricant therefrom, said bearing loosely supporting the bush with a clearance existing therebetween;
the bush being free in use to turn with respect to the bearing and the shaft;
the bush being formed with an even number n of circumferentially equally spaced passages extending radially from its outer cylindrical surface to its inner cylindrical surface,
the bearing being formed with a lesser even number m of circumferentially equally spaced passages which extend from its outer cylindrical surface to its inner cylindrical surface and which are inclined with respect to the bearing radii in the direction opposite to the normal direction of rotation of the shaft, whereby the passages of the bush are arranged to come into register sequentially with the passages of the bearing as the bush rotates relative to the bearing, the radial angle subtended by the inner ends of the passages in the bearing being approximately 360°/m–360°/n.

4,371,220

SELF-LUBRICATING PLAIN BEARING

Egon Brucher, Hebelstrasse 57, D-7633 Seelbach, Fed. Rep. of Germany

Filed Jan. 13, 1981, Ser. No. 224,845

Claims priority, application Fed. Rep. of Germany, Jan. 14, 1980, 3001115

Int. Cl.³ F16C *33/82;* **F16N** *15/00*

U.S. Cl. 384—371 **13 Claims**

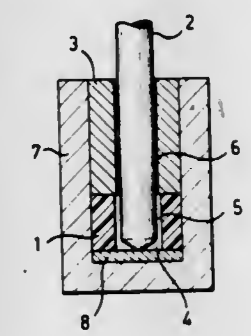

1. A self-lubricating plain bearing for a shaft, comprising a bore for receiving the shaft; a porous member which is arranged in the bore at an inner portion thereof and which occupies only a part of the bore in the axial direction thereof, the porous member being adapted to be impregnated with lubricant and surround the shaft at a clearance therefrom; and a bearing surface means adapted to support the shaft, which is disposed in the bore adjacent to the porous member and which extends outwardly therefrom, the bearing surface means having a bearing clearance from the shaft therein, the clearance between the shaft and the porous member being larger than the bearing clearance between the shaft and the bearing surface means, and the pore size of the porous member being larger than said clearance between the shaft and the porous member, whereby lubricant in the porous member flows by capillary action out of the clearance between the porous member and the shaft into the bearing clearance between the shaft and the bearing surface means.

4,371,221

COMPOSITE MODULAR ELEMENT STRUCTURE FOR FURNISHINGS

Camillo Citterio, Via Don Minzoni, 6 Robbiano di Giussano, Province of Milan, Italy

Filed Jul. 6, 1979, Ser. No. 55,927

Claims priority, application Italy, Feb. 2, 1979, 20680/79[U]

Int. Cl.³ A47B *53/00, 87/00*

U.S. Cl. 312—199 **8 Claims**

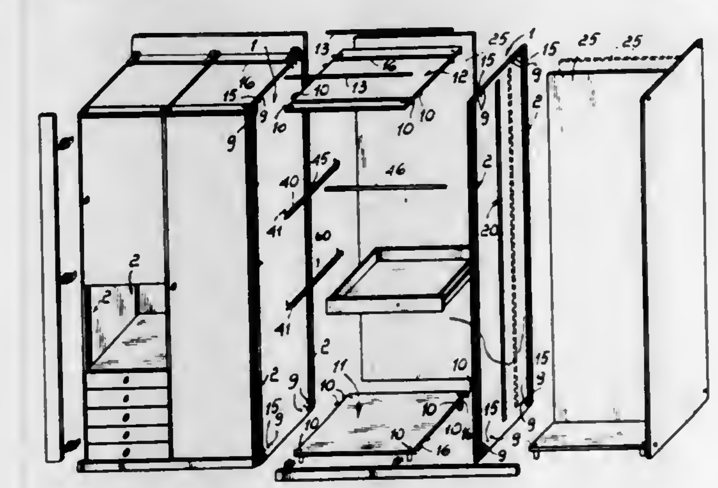

1. A composite modular element structure for furnishings, comprising a pair of spaced apart parallel vertical opposite side wall members, each including a pair of opposite vertical edge portions, each having a longitudinal groove extending parallel thereto and having a groove bottom and a pair of opposite groove flanks, a vertical back wall member connecting the opposite side wall members, vertical guideway-like means for the connection of said back and accessory elements and located in said longitudinal groove at each vertical edge portion of said side wall members, a roof panel and base panel adapted for assembling to said side wall members, tie members for assembling said side wall members and roof panel and base panel together, said tie members being carried by said side wall members and extending substantially perpendicular to said side wall members, wherein according to the improvement each sectional member comprises at least one web formation including supporting portions thereof and extending along said groove and facing said groove bottom and at least two spaced flange formations including engaging portions thereof and having lateral longitudinal edges and extending along said groove and facing said groove flanks and arranged tranverse to said web formation connecting said flange formations, each flange formation having rib formations at the outside surface thereof for engagement with said flanks of said grooves, said web formations having at least one supporting portion inwardly offset with respect to said lateral edges of said flange formations thereby said supporting portion of said web formation being arranged at a distance from said groove bottom to provide an anchoring interspace thereon when the sectional member is inserted in said groove, a series of through slots in said supporting portion and arranged at regular intervals over the longitudinal extension of said supporting portion of said web formations, and wherein said accessory elements have anchoring lug formations partially insertable selectively into said through slots and including an end portion thereof, which in the inserted position of said lug formation extends selectively into said anchoring interspace.

4,371,222

RETRACTABLE SCISSORS TONG MECHANISM

Mitchell F. Gorkiewicz, 419 E. Sixth St., Royal Oak, Mich. 48067

Filed Sep. 8, 1980, Ser. No. 185,339

Int. Cl.³ A47G *29/00*

U.S. Cl. 312—211 **11 Claims**

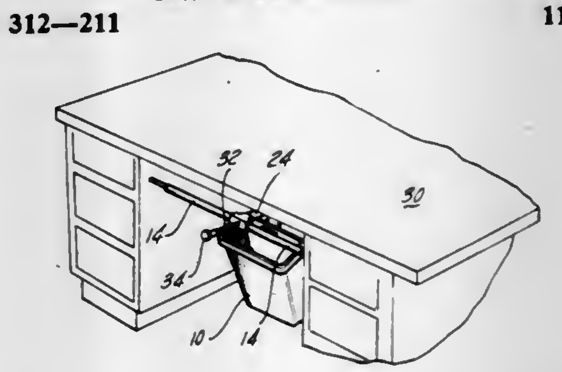

11. An apparatus for moving a container between the front and rear of a housing, said apparatus comprising:
a guide rail extending from the front to the rear of the housing;
means for mounting said rail in the housing;
means for supporting a container on said rail, said supporting means being movable between the front and rear of the housing;
an actuating member connected to said rail and movable therealong;
trivet means having a plurality of expansible sections, said trivet means fastened to said rail, said actuating member, and said supporting means for moving said supporting means a greater axial distance along said guide rail than the distance moved by said actuating member, whereby a container attached to said supporting means may be moved from the rear to the front of the housing by moving

said actuating member only a portion of the distance therebetween;
wherein said rail is hollow and has an axial slot near the rear of the housing and wherein said actuating member comprises:
a rod coaxially slidably disposed in said rail;
a pin connecting said rod and the first section of said trivet mechanism so as to support said trivet mechanism, said pin being slidable through said slot so as to expand and contract said first section by movement of said rod.

4,371,223
CABINET DOOR HINGE
Hans C. Grunert, Aldelberg, and Heinz Becker, Weinstadt, both of Fed. Rep. of Germany, assignors to Sybron Corporation, Rochester, N.Y.
Filed May 14, 1980, Ser. No. 149,572
Int. Cl.³ A47B *95/00;* **E05D** *15/58*
U.S. Cl. 312—325 **4 Claims**

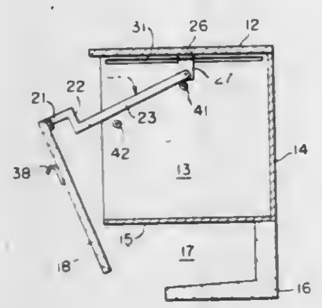

1. In a cabinet comprising top, bottom, side and rear walls and an open front, the bottom being supported above a floor surface so as to provide an open space beneath the bottom wall and a door for closing the open front, an improved hinge system for moving the door between a closed and an open position wherein the door in its open position is stored in the open space beneath the cabinet bottom wall, said hinge system comprising:
(a) horizontal runners along each side wall adjacent the top thereof and extending substantially front to rear in said cabinet;
(b) a slide supported in said runners, said slide being adjacent said back wall when said door is in its closed position and adjacent the front of said cabinet when said door is in its full open position;
(c) a hinge bar having a first end pivotally connected to said slide and a second end fixed to said door adjacent the top thereof, said hinge bar extending substantially horizontally from said slide when said door is in its closed position and depending substantially vertically from said slide when said door is in its open position; and
(d) support means fixed to said side walls and providing substantially the sole support to maintain said hinge bar in a substantially horizontal orientation and said door in a closed position, said means being located at a point intermediate the ends of said hinge bar so as to become inoperative to support said bar in a horizontal orientation when said slide and the first end of said hinge bar are moved toward the open front of said cabinet and pass forward of said support means, thereby allowing said hinge bar to pivot downwardly to a substantially vertical position.

4,371,224
SINGLE TURRET MACHINE FOR FABRICATING HIGH-INTENSITY DISCHARGE ARC TUBES
John J. Murphy, Livingston; John Petro, Belleville, and Melvin C. Unglert, Wyckoff, all of N.J., assignors to Westinghouse Electric Corp., Pittsburgh, Pa.
Filed Dec. 24, 1980, Ser. No. 219,695
Int. Cl.³ H01J *9/32, 9/48*
U.S. Cl. 316—32 **1 Claim**

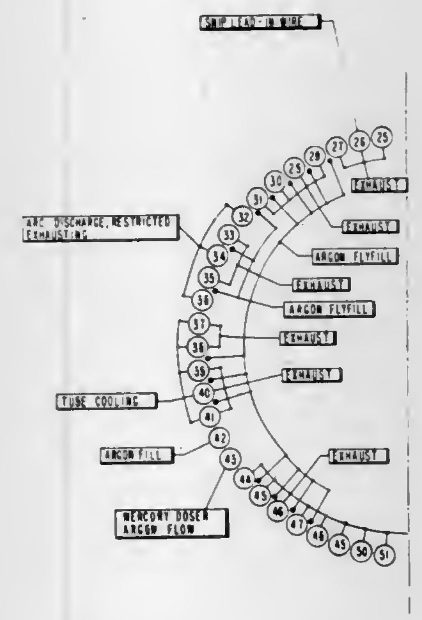

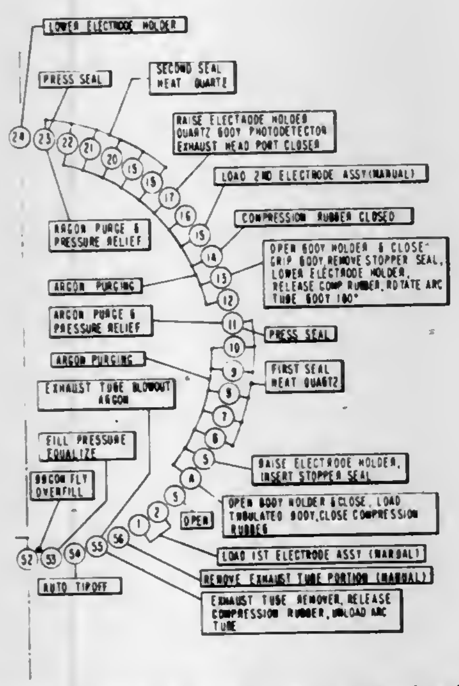

1. A high-speed integral machine for fabricating substantially contaminant-free high-intensity discharge arc tubes, said machine comprising rotary lamp-making means comprising a turret, a plurality of arc tube body holding members each mounted on and about the peripheral portion of said turret, a plurality of work station means located about the periphery of said turret, driving means for driving said turret and indexing each of said plurality of arc tube holding members in a stop-and-go fashion so that each of said plurality of arc tube holding members is sequentially indexed from work station means to work station means, said arc tubes as fabricated each including a tubular quartz body having a first electrode assembly press-sealed at one end thereof and a second electrode assembly press-sealed at the other end thereof, said electrode assemblies each comprising an electrode affixed to one end of a ribbon-type metallic seal means, a predetermined discharge-sustaining filling being contained within said arc tube body as fabricated, said arc tube body during fabrication having an exhaust tubulation projecting laterally therefrom and opening into the interior thereof, said machine operating to receive each arc tube

individually and to separately fabricate same, said machine comprising:
(a) a first of said work station means operating to load each said first electrode assembly and said arc tube body onto one of said arc tube body holding members;
(b) a second of said work station means for heating one end of said loaded arc tube body and inserting said first electrode assembly and press-sealing said heated end of said loaded arc tube body to rigidly secure said first electrode assembly and seal said heated end of said loaded arc tube body while purging said arc tube body with an inert gas;
(c) a third of said work station means operating to heat the other end of said loaded arc tube body and insert said second electrode assembly and press-seal heated other end of said arc tube body to rigidly secure said second electrode assembly and seal said other end of said arc tube body while purging said arc tube body with an inert gas;
(d) a fourth of said work station means operating to exhaust said arc tube body while still hot;
(e) a fifth of said work station means for repeatedly filling said arc tube with an inert gas and creating an arc discharge between said electrodes and exhausting said arc tube body to substantially remove any contaminants;
(f) a sixth of said work station means for partially cooling said arc tube body while exhausting same and filling said arc tube body with an inert gas;
(g) a seventh of said work station means for dosing said arc tube body with a predetermined amount of mercury and repeatedly filling said arc tube body with an inert gas and then exhausting said inert gas;
(h) an eighth of said work station means for overfilling said arc tube body with an inert gas to a pressure greater than the final desired fill pressure, and then bleeding said inert gas from said overfilled arc tube body to achieve said final desired fill pressure;
(i) a ninth and final of said work station means for tipping-off said exhaust tubulation from said arc tube body and removing the residual tip from said arc tube body holding member and unloading said completed arc tube from said arc tube body holding member, whereby all fabricating operations are completed upon one turret without substantial cooling of said arc tube between fabricating steps and a possible introduction of impurities therein.

4,371,225
ELECTRICAL CONNECTOR FOR TERMINATING FLAT MULTICONDUCTOR CABLE
Ronald S. Narozny, Panorama City, Calif., assignor to Thomas & Betts Corporation, Raritan, N.J.
Filed Jul. 31, 1980, Ser. No. 174,234
Int. Cl.³ H01R *4/24*
U.S. Cl. 339—97 C **12 Claims**

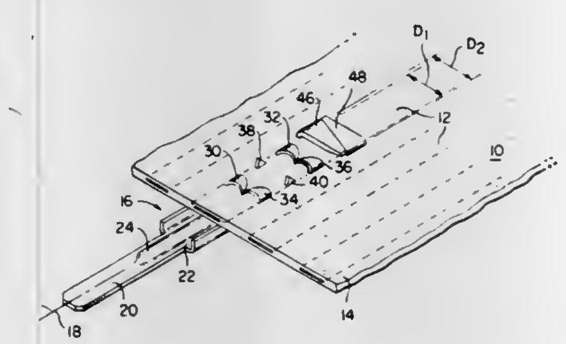

1. An electrical connector for terminating flat cable having elongate conductors each of predetermined lateral expanse disposed within an insulative casing, said connector comprising
an electrically conductive elongate member having a web portion and a terminal portion, said web portion defining first and second laterally opposed side margins spaced apart a distance not greater than said predetermined conductor expanse and a further side margin laterally outward of one of said first and second side margins, first and second insulation-piercing and conductor-penetrating teeth extending respectively from said web portion at said first and second side margins and an insulation-piercing tooth extending from said web portion at said further side margin.

4,371,226
FILTER CONNECTOR AND METHOD OF ASSEMBLY THEREOF
Salvatore T. Brancaleone, Newport Beach, Calif., assignor to International Telephone and Telegraph Corporation, New York, N.Y.
Filed Oct. 20, 1980, Ser. No. 198,295
Int. Cl.³ H01R *23/08*
U.S. Cl. 339—147 R **14 Claims**

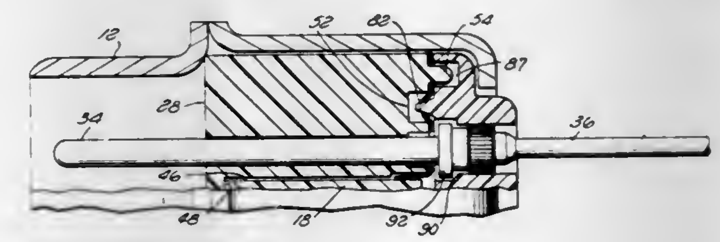

1. A filter connector comprising:
an insulator body having at least one row of cavities therein, each said cavity receiving an electrical contact;
a slot in said body parallel to said row of cavities;
a monolithic capacitor in said slot;
said capacitor comprising a dielectric substrate having a plurality of parallel, spaced live electrodes on an outer face thereof facing in the direction of said contacts and aligned therewith;
an individual, separate conductive spring element associated with each of said contact cavities making resilient electrical connection between the contact therein and a corresponding live electrode of said capacitor; and
a conductive carrier strip for said spring elements mounted on said insulator body and separated from said spring elements.

4,371,227
ELECTRIC CONNECTOR
Yosikazu Yosimura, Ohsaki, Japan, assignor to Hirose Electric Co., Ltd., Tokyo, Japan
Filed Aug. 14, 1980, Ser. No. 178,006
Claims priority, application Japan, Apr. 19, 1979, 54-53822[U]
Int. Cl.³ H01R *13/05, 13/432*
U.S. Cl. 339—211 **2 Claims**

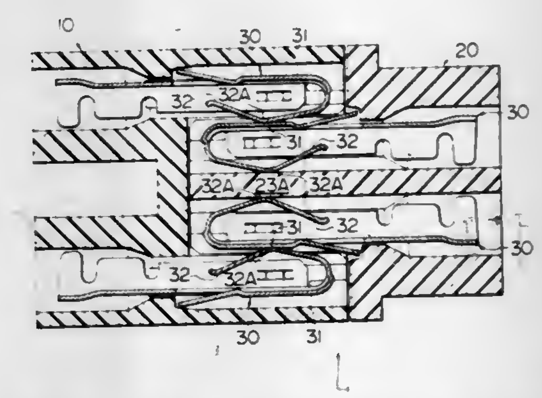

1. An electric connector comprising a pair of mating parts adapted to be coupled to each other, and contact elements disposed in the housings of said mating parts having same shape and dimensions, each of said contact elements having a

main body in the form of a channel and a plate-like member upwardly and rearwardly extending from the forward end of the bottom wall of said main body, the rearward end of said main body forming a connecting section for an electric wire to be terminated, the outer surface of the forward portion of the bottom wall of said main body forming a planar contacting section, a portion of the bottom wall of the channel-shaped main body between the connecting section and the planar contacting section being cut and pushed out to provide a latching tongue, the side walls of the portion of the channel-shaped main body the bottom wall of which forms the planar contacting section being provided with latching protrusions outwardly embossed, said plate-like member being provided with an upwardly convex spring contact, the contact element being inserted into a contact element groove of the housing of one of said mating parts so that said planar contacting section of the contact element is exposed to the exterior of the groove and said convex spring contact of the contact element faces to the bottom wall of the groove, the latching tongue engaging a latching protrusion of said one housing and the outwardly embossed latching protrusions of said connector element engaging the inner wall of the contact element groove thereby fixing the contact element in place in the contact element groove and substantially resisting angular movement of said planar contacting section relative to the housing, the contact element being inserted into a contact element groove of the housing of the other mating part so that said convex spring contact of the contact element is exposed to the exterior of the groove, the latching tongue engaging a latching protrusion of said other housing and the outwardly embossed latching protrusions of said connector element engaging the inner wall of the contact element groove thereby fixing the contact element in place in the contact element groove and substantially resisting angular movement of said planar contacting section relative to said housing, whereby said outwardly convex spring contact of the contact element in the other mating part can make contact with said planar contacting section of the contact element in the one mating part and the convex spring contact of the contact element in said one mating part makes press contact with the bottom wall of the contact element groove in the housing of said one mating part, when said mating parts are coupled to each other.

4,371,228
ELECTRIC CONNECTOR
Walter M. Chalmers, 12 Clive Rd., Dundee, Scotland
Continuation-in-part of Ser. No. 78,208, Sep. 24, 1979, abandoned. This application Sep. 11, 1980, Ser. No. 186,385
Claims priority, application United Kingdom, Sep. 27, 1978, 38273/78
Int. Cl.³ H01R *13/42*
U.S. Cl. 339—221 R **6 Claims**

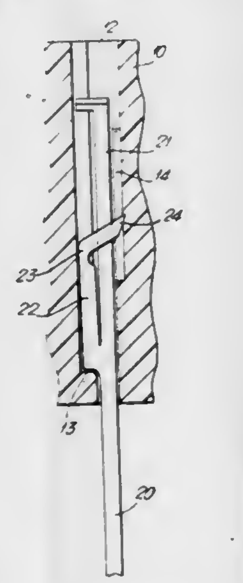

1. An electric connector of the type comprising a housing of electrically insulating material having a plurality of contact members extending parallel to one another and arranged to be inserted and withdrawn from the housing from one end thereof, in which the housing includes, for each contact member, an aperture extending through the housing and defining a retaining shoulder, a contact-locating region, and a slot communicating with the contact-locating region and extending from the said one end of the housing for at least part of the length of that region, and in which each contact member includes a terminal portion arranged to project from the end of the housing remote from the said one end, a contact portion arranged to be located in the contact-locating region so as to cooperate with a plug member inserted into the housing from said one end, and a retaining portion having a sharpened end arranged to extend into said slot and shaped so as to become wedged across the aperture to prevent the withdrawal of the contact member through the said one end of the housing.

4,371,229
INTEGRAL ELECTRICAL CONNECTOR AND METHOD FOR MAKING SAME
Paul J. Spangler, Novelty, and Robert C. Koslo, Mentor, both of Ohio, assignors to ETC, Incorporated, Bedford Heights, Ohio
Filed Jun. 20, 1980, Ser. No. 161,380
Int. Cl.³ H01R *4/20*
U.S. Cl. 339—223 R **15 Claims**

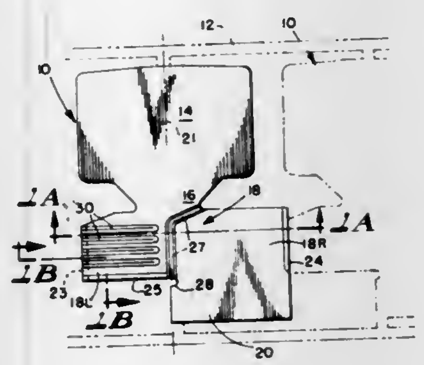

1. An electrical connector made from a one-piece body adapted to terminate or join at least one electrical lead wire having an insulating sheath containing conductor means, said connector comprising connector means adapted for termination or joinder and a reinforced wire barrel having nested radially inner and outer cylindrical walls which have side edges contacting opposite surfaces of an offset web extending between and interconnecting the two cylindrical walls, the reinforced wire barrel being adapted to receive the conductor means of said lead wire for termination or joinder.

4,371,230
ELECTRIC CONNECTOR
Nori Inoue, Yokkaichi, Japan, assignor to Tokai Electric Wire Company Limited, Yokkaichi, Japan
Filed Feb. 2, 1981, Ser. No. 230,793
Claims priority, application Japan, Feb. 2, 1980, 55-11668
Int. Cl.³ H01R *11/12, 11/32*
U.S. Cl. 339—242 **4 Claims**

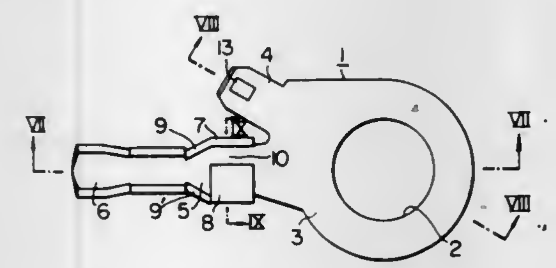

1. An electric connector comprising:

a flat ring-shaped terminal portion having a bolt hole formed therein;
a tab extending radially outwardly from said ring-shaped terminal portion;
a portion for receiving a tab of another like connector and having a tab insertion opening, said tab receiving portion extending radially outward from said terminal portion at an angle with respect to said tab;
a wire crimping portion extending from the outer end of said tab receiving portion in substantially the same radial direction as said tab receiving portion;
said tab and said tab receiving portion being arranged such that the tab of one electric connector may be inserted into and securely held in the tab insertion opening of another electric connector with the ring-shaped terminal portion of the one connector superposed on the ring-shaped terminal portion of the another connector.

4,371,231
ELECTRICALLY CONDUCTIVE CONNECTION OF THE ACTIVE PORTIONS OF AN ELECTRICAL COMPONENT OR OF AN INTEGRATED CIRCUIT TO TERMINALS
Albert Jung, Taufkirchen, Fed. Rep. of Germany, assignor to Siemens Aktiengesellschaft, Berlin and Munich, Fed. Rep. of Germany
Filed Sep. 29, 1980, Ser. No. 192,323
Claims priority, application Fed. Rep. of Germany, Nov. 12, 1979, 2945670
Int. Cl.³ H01R *5/04*
U.S. Cl. 339—275 R **6 Claims**

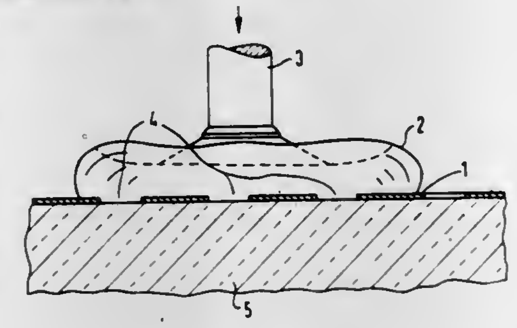

1. An electrically conductive connection of the active part of a semiconductor layer of an electrical component to a terminal for external connection, comprising, a very thin gold wire having one end connected to the external connection terminal; a metal contact layer having a large group of perforation holes bonded on the semiconductor layer of the electrical component and a contact head at the other end of the gold wire being connected by thermocompression to a portion of the metal layer, the contact head being additionally deformed as a result of deformation into a plurality of said group of perforation holes.

4,371,232
GRADED GAP SEMICONDUCTOR OPTICAL DEVICE
James D. Jensen, Highland, and Richard B. Schoolar, Silver Spring, both of Md., assignors to The United States of America as represented by the Secretary of the Navy, Washington, D.C.
Division of Ser. No. 864,417, Dec. 27, 1977, Pat. No. 4,227,948. This application Apr. 25, 1980, Ser. No. 143,695
Int. Cl.³ H01L *27/14;* **G02B** *1/02*
U.S. Cl. 350—1.4 **29 Claims**

1. A lens comprising:
a layer geometrically described by the orthogonal dimensions of thickness and width, the layer being prepared from a lead alloy having a cadmium-chalcogenide mole fraction, the cadmium-chalcogenide mole fraction of the

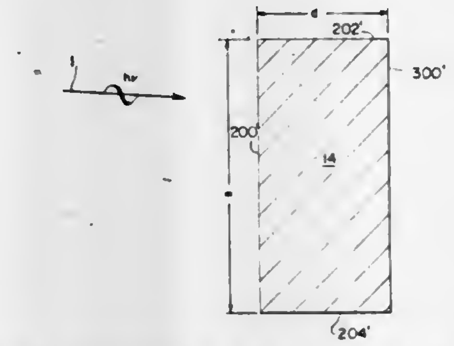

layer depending upon at least one of the orthogonal dimensions.

4,371,233
LENS-APPLIED OPTICAL FIBER CONNECTOR
Sigefumi Masuda, Yokohama, Japan, assignor to Fujitsu Limited, Kawasaki, Japan
Filed Jun. 25, 1980, Ser. No. 162,875
Claims priority, application Japan, Jul. 11, 1979, 54-94498[U]; Aug. 28, 1979, 54-108576; Dec. 13, 1979, 54-160748[U]; Dec. 27, 1979, 54-182197; Dec. 28, 1979, 54-170982
Int. Cl.³ G02B *7/26*
U.S. Cl. 350—96.18 **13 Claims**

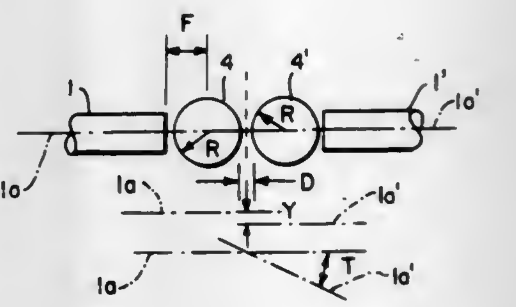

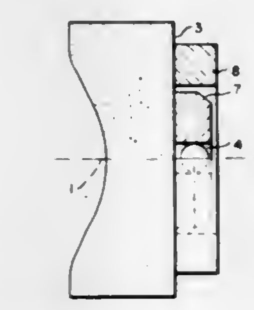

13. A lens-applied optical fiber connector for connecting first and second optical fibers, comprising:
first and second cylindrical sleeves, each having a hole along its central axis through which the first and second optical fibers, respectively, are inserted;
a hollow cylindrical adapter having a through hole through which said first and second cylindrical sleeves are inserted from opposite sides;
first and second lenses arranged between the first ends of said first and second cylindrical sleeves so as to be placed face to face in the through hole of said hollow cylindrical adapter, the first and second optical fibers optically connected via said first and second lenses, said first and second lenses being spherical lenses having a focal length of from 0.09 to 0.27 mm, said first and second lenses positioned at a point on the optical axis of the first and second optical fibers equal to the focal length, the end surface of

each of the first and second optical fibers being shaped with a gradient angle defined by the angle of

$$Y/f\,(n_0-1)$$

where, Y is the axial deflection between the optical axis of the first and second optical fibers and the center line of said hollow cylindrical adapter, f is the focal length of each of said first and second spherical lenses and n_0 is the refraction coefficient of the first and second optical fibers;

first and second lens holders for holding said first and second lenses, respectively, said first and second lens holders thicker than said first and second lenses; and

first and second guard means for protecting said first and second lens holders, respectively, said first and second guard means thicker than said first and second lens holders, said first and second guard means connected to the first ends of said first and second cylindrical sleeves.

4,371,234
SUBMARINE OPTICAL CABLE
Colin S. Parfree, and Peter Worthington, both of Southampton, England, assignors to International Standard Electric Corporation, New York, N.Y.
Filed Nov. 13, 1980, Ser. No. 206,425
Claims priority, application United Kingdom, Nov. 15, 1979, 7939606
Int. Cl.³ G02B *5/16*
U.S. Cl. 350—96.23 **4 Claims**

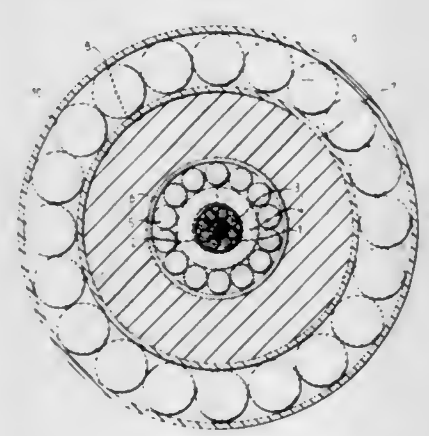

1. An optical fiber cable including a central cylindrical strength member, a plurality of coated optical fibers laying about the surface of said strength member, a layer of thermoplastic or rubber-like material enclosing the optical fibers, a metallic tube enclosing and laying about said layer, said tube being usable as an electrical conductor, a layer of high tensile steel wires laying about said metallic tube, a further tube of metal enclosing said layers of wires, and a sheath of an insulating material laying about said further metal tube.

4,371,235
IMAGE CONTROL MIRROR
Travis E. Locke, Sr., 4522 U.S. 36 W., Greenville, Ohio 45331
Continuation-in-part of Ser. No. 67,955, Aug. 20, 1979, abandoned. This application Feb. 28, 1980, Ser. No. 125,697
Int. Cl.³ B60R *1/06*
U.S. Cl. 350—280 **3 Claims**

1. An image control mirror for exterior mounting on trucks, tandem trailers, commercial vehicles and the like, said mirror comprising in combination:

an exterior housing;

a transparent front lens connected to said housing;

a mirror image-providing surface arranged within said housing, said mirror image-providing surface being pivoted on only one side with the other side being locatable selectively in either of a normal position as close to as well as parallel to said lens and an anti-glare position differing at an angle distinctly specific as to said transparent front lens to substantially prevent both day and night glare and also simultaneously automatically refractively avoiding second or third multiple images which distract from proper undistorted image maintained therewith, said distinctly specific angle being within a range equal to about 2.25 to 3.9 times the distance in inches at a value determined multiply per inch of transverse width of said surface;

gasket means mounted in said housing both for hermetic sealing of space between said lens and said mirror surface and also to serve as a vibration dampener therewith, means for locating said surface at the selected angle and at least one of said surface and said housing being mounted externally so as to be pivotal only about a vertical axis, the transverse width being approximately six inches, and the angle being approximately in a range between 14° and 20.5°, said mirror image-providing surface being provided on a member mounted in said housing, said member being transparent, and said surface being provided by a second surface coating on that side of said member remote from

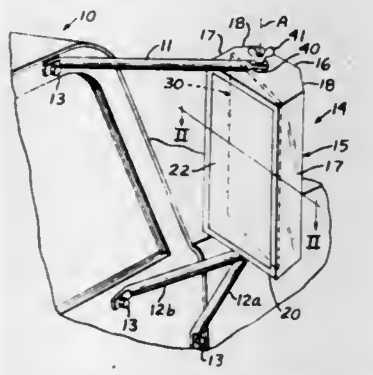

said front, and further including means for safety illuminating and electrically heating said member, said member being a prism providing both said transparent front lens and said mirror image-providing surface, and further including means for operatively retaining said member in said housing including a profiled retaining element operatively connectible to said housing, and seal means operatively connectible between said retaining element and said member, said means for retaining said member including:

a vertical shaft operatively connectible in said housing between a pair of opposed walls thereof;

means for securing said member to said shaft so that said mirror image-providing surface is pivotal about the longitudinal axis of said shaft; and

means operatively connectible to said member for moving said member, said means extending at least in part exteriorly of said housing for actuation thereof, foil-type means for electrically heating said member, said member being a prism, said angle being equal to about 3.4 times the distance in inches of transverse width of said surface.

4,371,236
ELECTROCHROMIC DISPLAY USING RARE-EARTH DIPHTHALOCYANINES AND A LOW FREEZING-POINT ELECTROLYTE
Margie M. Nicholson, San Marino, Calif., assignor to Rockwell International Corporation, El Segundo, Calif.
Continuation-in-part of Ser. No. 36,967, May 8, 1979, abandoned, which is a continuation-in-part of Ser. No. 948,364, Oct. 4, 1978, Pat. No. 4,184,751, which is a continuation of Ser. No. 752,950, Dec. 20, 1976, abandoned. This application May 29, 1981, Ser. No. 268,508
Int. Cl.³ G02F *1/17*
U.S. Cl. 350—357 **10 Claims**

1. An electrochromic display cell capable of assuming a plurality of visually distinct optical states at very low temperatures with response times less than 50 milliseconds comprising:

transparent electronically conductive display electrode means;

counterelectrode means for establishing a potential difference relative to said display electrode means;

a layer of electrochromic material comprising a rare earth diphthalocyanine complex disposed on said display electrode means; and

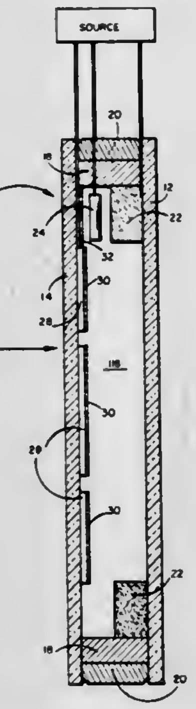

an electrolyte material interposed between said film on said display electrode means and said counterelectrode means in order to pass ionic current;

wherein said electrolyte material is a concentrated aqueous solution of metal salt which solution freezes at a temperature below approximately −50 C.

4,371,237
APPARATUS FOR MEASURING CURVATURES OF A SPHERICAL SURFACE
Kiichi Kamiyama, and Yoshinori Oana, both of Tokyo, Japan, assignors to Tokyo Kogaku Kikai Kabushiki Kaisha, Tokyo, Japan
Continuation of Ser. No. 945,866, Sep. 26, 1978, abandoned. This application Mar. 21, 1980, Ser. No. 132,412
Claims priority, application Japan, Sep. 30, 1977, 52-117580; Sep. 30, 1977, 52-131693[U]
Int. Cl.³ A61B *3/10, 3/00*
U.S. Cl. 351—245 **3 Claims**

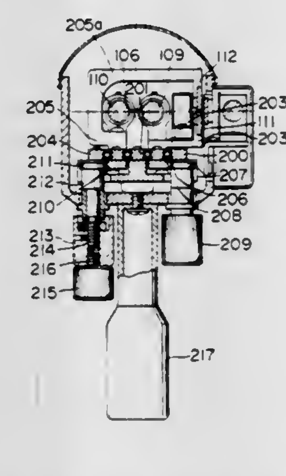

1. A single hand actuating means for an ophthalmoscopic instrument having a body and means mounting said body for swingable adjustment and at least two adjusting devices provided in the body, said adjusting devices being connected to first and second movable optical elements, said body being provided with a downwardly extending handle for the swingable adjustment of the body, a pair of adjusting knobs provided on said body at the opposite sides of the handle and connected with respective ones of the adjusting devices, one of said adjusting knobs being longer than the other knob whereby the knobs can conveniently be actuated by fingers of a hand gripping the handle.

4,371,238
SPECTACLES FRAME
Bernard Lhospice, Blois, France, assignor to Essilor International Cie Generale d'Optique, Cretail, France
Filed Oct. 16, 1980, Ser. No. 197,707
Claims priority, application France, Oct. 16, 1979, 79 25654; Aug. 22, 1980, 80 18335
Int. Cl.³ G02C *1/04*
U.S. Cl. 351—106 **18 Claims**

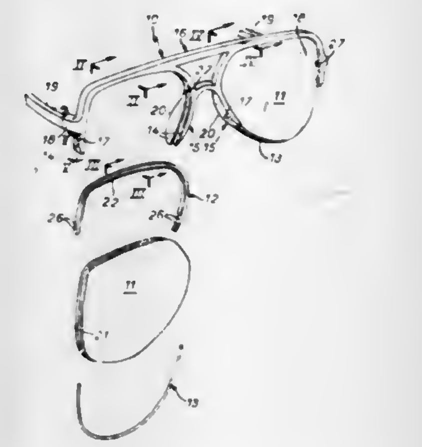

1. Spectacle frame of the kind comprising a main structure and, carried by the latter, two surrounds or rims which are suitable for receiving a spectacle lens, each of the said surrounds or rims comprising, on the one hand, an upper rim suitable for cooperating, by interlocking, with a spectacle lens, and, on the other hand, a flexible rim cord suitable for being fixed to the main structure at each of its ends, by passing through two holes associated with the said main structure, characterized in that, for at least one of the ends of the flexible rim cord, four holes are provided in combination, two holes being formed in the main structure, and two holes being formed in the upper rim in question, the said holes being in corresponding pairs from the said main structure to the said upper rim, so that the said flexible rim cord fastens the upper rim to the main structure.

4,371,239
FILM POSITIONING DEVICE FOR MICROFORM PRINTING SYSTEM
Shigenori Oosaka, and Makoto Murakoshi, both of Asaka, Japan, assignors to Fuji Photo Film Co., Ltd., Kanagawa, Japan
Division of Ser. No. 959,850, Nov. 13, 1978, Pat. No. 4,247,197. This application Sep. 3, 1980, Ser. No. 183,731
Claims priority, application Japan, Nov. 14, 1977, 52-136451; May 23, 1978, 53/61470
The portion of the term of this patent subsequent to Jan. 27, 1998, has been disclaimed.
Int. Cl.³ G03B *23/08*
U.S. Cl. 353—26 R **7 Claims**

1. A film positioning device for a microform printing system for moving a microfilm in a horizontal plane so that a selected area of the microfilm is presented to a film aperture for recording, comprising a flat base plate, a microfilm carrier including a transparent portion slidably disposed on the base plate for holding the microfilm on the base plate, a sliding spacer fixed to the carrier for supporting the carrier at a predetermined distance above the base plate, a film feed means for feeding the film relative to the carrier and a driving means for moving said carrier in X and Y-directions, said driving means including first and second parallel X-directional guide bars extending in the X-direction spaced from each other, a main bracket slidable

along the first X-directional guide bar, a sub-bracket slidable along the second X-directional guide bar, first and second parallel Y-directional guide bars extending in the Y-direction between the main bracket and the sub-bracket, the opposite ends of each Y-directional guide bar being respectively secured to the main bracket and the sub-bracket, said carrier being operatively connected to the Y-directional guide bars and being slidable therealong, a first electric motor which rotates to move the main bracket back and forth together with said carrier along said first X-directional guide bar and a second electric motor which rotates to move the carrier back and forth along the Y-directional guide bars independent of said main bracket, said sliding spacer keeping said distance between the base plate and the carrier constant during movement of the carrier in X- and Y-directions, a viewing means, the film feed means feeding the film relative to the transparent portion of the carrier and the drive means moving the carrier in X- and Y-directions to align a further selected area of recorded information on the microfilm with the viewing means so that the further selected area may be viewed.

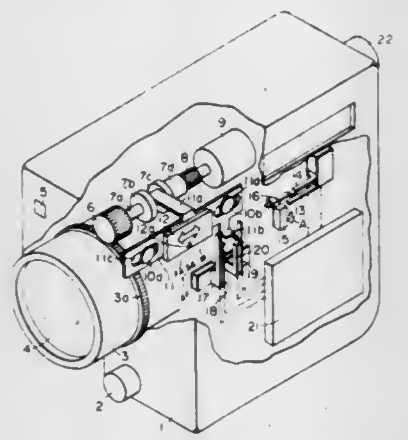

4,371,240
MOTION PICTURE CAMERA HAVING AN AUTO-FOCUS ADJUSTING DEVICE

Ichiro Shimizu, Tokyo; Yoshio Komine, Yokohama, and Makoto Masunaga, Tokyo, all of Japan, assignors to Canon Kabushiki Kaisha, Tokyo, Japan

Filed Sep. 17, 1980, Ser. No. 188,247

Claims priority, application Japan, Sep. 25, 1979, 54-123005

Int. Cl.³ G03B *3/00*

U.S. Cl. 352—140 14 Claims

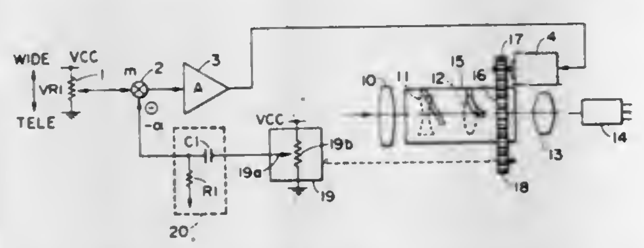

1. An automatic focusing system comprising:
(a) a focus adjustable lens means adapted to be focused on an object;
(b) an automatic focusing means for automatically focusing said lens means on the object;
(c) actuating means for actuating said automatic focusing means;
(d) mode selecting means for selecting a focusing mode of the system, said mode selecting means being selectively set at one of first, second and third positions;
(e) supplementary means having non-operated and operated positions; and
(f) control means responsive to said trigger means, mode selecting means and supplementary means to control the operation of said automatic focusing means, said control means
(1) setting said automatic focusing means at an inoperative state in which said automatic focusing means is inoperative irrespective of the operation of said actuating means and in which said lens means is permitted to be manually adjusted, when said mode selecting means is set at said first position;
(2) operating said automatic focusing means only once in response to each of the operations of said actuating means and supplementary means and holding said automatic focusing means ineffective irrespective of changes in the distance between the system and the object after once said lens means has been focused on the object, when said mode selecting means is set at said second position; and
(3) continuously operating said automatic focusing means in response to said actuating means as long as said supplementary means is in the non-operated position while holding said automatic focusing means ineffective as long as said supplementary means is in the operated position, when said mode selecting means is set at said third position.

4,371,241
MOVING PICTURE CAMERA IN WHICH CONSTANT SPEED ZOOMING IS EFFECTED

Kenji Fujikawa, Kawasaki, Japan, assignor to Canon Kabushiki Kaisha, Tokyo, Japan

Filed Jul. 2, 1981, Ser. No. 279,946

Claims priority, application Japan, Jul. 9, 1980, 55-93713

Int. Cl.³ G03B *3/10*

U.S. Cl. 352—140 6 Claims

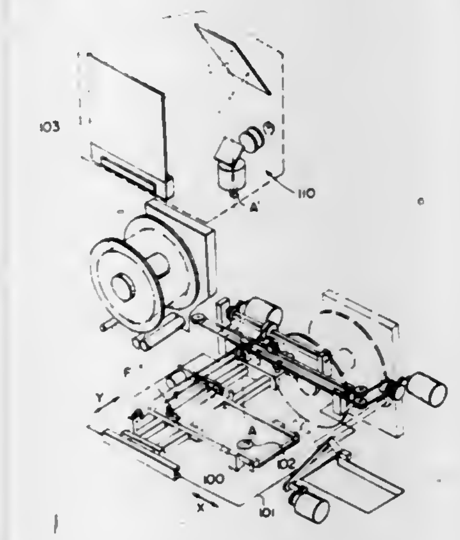

1. A moving picture camera provided with:
objective optical means having a plurality of movable groups;
control means for controlling the movement of said groups for zooming;
an electrical device for driving said control means;
converter means coupled to said electric device for converting the displacement of said control means into a voltage variation; and
a differentiation circuit for differentiating said voltage variation and inputting the result to said electric device.

4,371,242
OBJECTIVE LENS EXCHANGING ARRANGEMENT IN A MICROFILM READER

Karl-Heinz Dietrich; Josef Gruber; Walter Rauffer, all of Munich, and Peter Nassl, Gauting, all of Fed. Rep. of Germany, assignors to Agfa-Gevaert AG, Leverkusen, Fed. Rep. of Germany

Filed Dec. 11, 1980, Ser. No. 215,402

Claims priority, application Fed. Rep. of Germany, Jan. 26, 1980, 3002844

Int. Cl.³ G03B *3/00*

U.S. Cl. 353—101 12 Claims

1. In a microfilm reader, an objective lens tube removal or exchanging arrangement, comprising in combination,
a base through which a microfilm is adapted to be guided;
an objective lens tube;
a cylindrically shaped casing operatively mounted in said base and adapted to slidably adjustably support said objective lens tube therein along its optical axis, said casing having an opening sufficiently large to permit the removal or exchange of the objective lens tube therethrough in a direction substantially normal to the optical axis thereof,
said casing further including a first closed portion which confronts said microfilm, said first closed portion subtends an arc in excess of 180° about the axis of said cylindrically

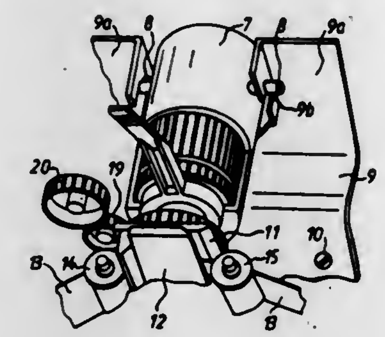

shaped casing, said opening adjoining said first closed portion, said objective lens tube being guidingly supported along its optical axis in the first closed portion of said casing;
said casing further including a second closed portion which also subtends an arc in excess of 180° about the axis of said cylindrically shaped casing, said opening also adjoining said second closed portion at its end opposite the end at which it adjoins the first closed portion; and
a rotary prism being rotatably adjustably mounted in said second closed portion.

4,371,243
PHOTOGRAPHIC MODE SELECTOR SYSTEM

Yoshiyuki Takishima; Masanori Uchidoi, both of Yokohama; Yukio Mashimo, Tokyo; Hiroshi Aizawa, Kawasaki, all of Japan, and Stephen C. Kwan, Plano, Tex., assignors to Canon Kabushiki Kaisha, Tokyo, Japan and Texas Instruments Incorporated, Tex.

Continuation of Ser. No. 64,579, Aug. 7, 1979, abandoned, which is a continuation of Ser. No. 764,272, Jan. 31, 1977, abandoned. This application Aug. 31, 1981, Ser. No. 298,334

Claims priority, application Japan, Jan. 30, 1976, 51-9073

Int. Cl.³ G03B *7/085, 15/05*

U.S. Cl. 354—43 42 Claims

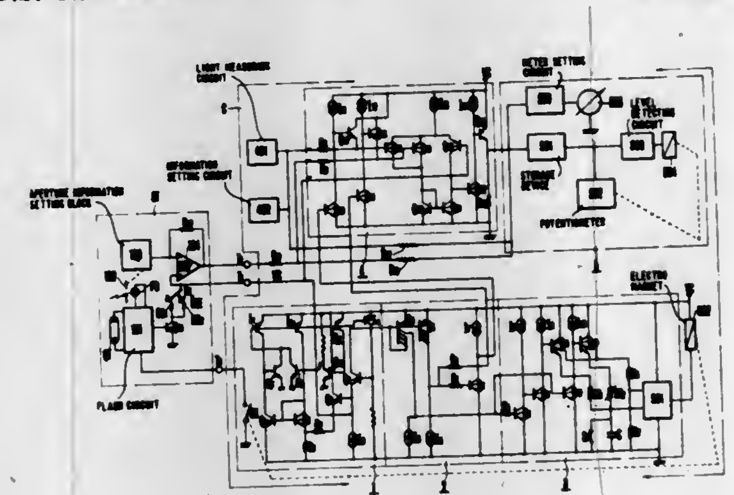

1. A camera operable with an automatic flash unit, comprising:
a diaphragm variable in response to electrical input signals,
a shutter having means for selecting a flash shutter time suitable for flash operation and having means for selecting settable shutter times,
a control circuit responsive to light and the set times of said means for selecting settable shutter times, for producing a control signal,
an input for responding to a variable diaphragm signal from the flash unit,
sensor means for sensing three levels of current in response to external signals and for maintaining the current levels constant, and
mode selector means coupled to said sensor means for connecting the control circuit to the variable diaphragm and enabling the means for selecting settable shutter times in response to one of the current levels, for applying the input signals to the diaphragm and enabling the means for selecting settable shutter times in the shutter in response to another of said current levels, and for connecting the input to the diaphragm and for enabling the means for selecting a flash shutter time in the shutter in response to still another of the current levels.

4,371,244
APPARATUS FOR CONTROLLING FILM ADVANCEMENT IN A CAMERA

Koichi Daitoku, Sagamihara; Kenji Sekine; Nobuo Matsukawa, both of Kawasaki, and Shiro Sugimori, Sagamihara, all of Japan, assignors to Nippon Kogaku K.K., Tokyo, Japan

Filed Jan. 30, 1981, Ser. No. 230,015

Claims priority, application Japan, Feb. 5, 1980, 55-12681

Int. Cl.³ G03B *1/18*

U.S. Cl. 354—173 9 Claims

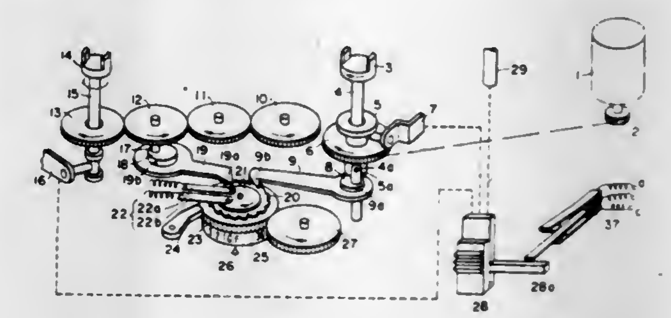

1. In a camera having a film transport mechanism for advancing film frame-by-frame and for rewinding advanced film, and having a counter operable in response to the advancement of the film for counting the number of frames advanced by the transport mechanism, the improvement comprising first control means responsive to the counter reaching a predetermined count for controlling the transport mechanism so as to prevent further advancement of the film, and second control means responsive to the transport mechanism effecting a rewind operation to rewind the film for automatically disabling the first control means so as to enable further film advancement by the transport mechanism.

4. The camera of claim 1 further comprising means for setting the counter to count a number of frames corresponding to said predetermined count, said setting means being operable to cause the first control means to assume a condition in which it does not prevent advancement of the film by the transport mechanism.

5. The camera of claim 4, wherein the film transport mechanism comprises an electrical motor and means for alternatively coupling the motor to a wind-up mechanism for advancing the film and to a rewind mechanism for rewinding the film, and wherein said first control means comprises a power controlling switch having a preventing position that prevents power from being applied to the motor, the switch being in said preventing position upon the counter being at said predetermined count, and wherein said control means comprises means operable upon the film being rewound for causing said power controlling switch to assume a non-preventing position.

4,371,245
PHOTOGRAPHING LENS SYSTEM WITH FOCUS INFORMING MEANS
Hiroshi Iwata, Ikoma; Tsunemi Yoshino, Ibaraki; Toshitsugu Kashihara, Nara, and Akitoshi Morioka, Osaka, all of Japan, assignors to West Electric Company, Ltd., Osaka, Japan
Filed Aug. 5, 1981, Ser. No. 290,402
Claims priority, application Japan, Aug. 8, 1980, 55-109369
Int. Cl.³ G03B *3/00, 13/18;* G02B *7/04*
U.S. Cl. 354—198 17 Claims

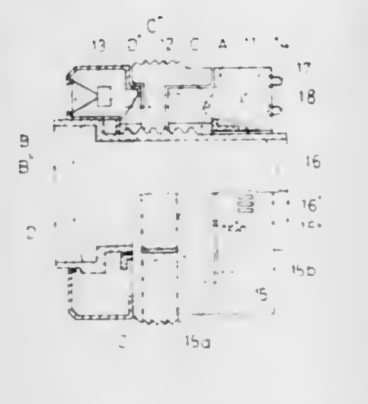

1. A photographic lens system for a photographic camera comprising,
a photographic lens,
a lens system housing which for holding said photographic lens, including a mounting means for detachable mounting on a camera body, said lens system housing comprising at least a means for adjusting focus by movement thereof and a cooperating handle, by which focussing is made,
an electrically operated distance measuring means, provided in said lens system housing, for measuring distance to a principal object and generating a measured distance signal corresponding to said measured distance,
an electrically operated adjustment indication means, provided in said lens system housing, for generating an adjusted distance signal corresponding to the distance of said principal object at which the lens is adjusted,
an electrically operated comparator circuit which compares said measured distance signal and said lens adjustment signal, and generates a focus information signal,
at least one electrically operated informing means responsive to said focus information signal, for generating discernable indicia of said focussing, and
a switch cooperating with a hand on said lens system housing for selectively applying power from a power source to said distance measuring means, said adjustment indication means, said comparator circuit, and said informing means.

4,371,246
THERMAL PROCESSOR
Bohdan W. Siryj, Cinnaminson, N.J., assignor to RCA Corporation, New York, N.Y.
Filed Feb. 13, 1981, Ser. No. 234,595
Int. Cl.³ G03D *7/00*
U.S. Cl. 354—299 8 Claims

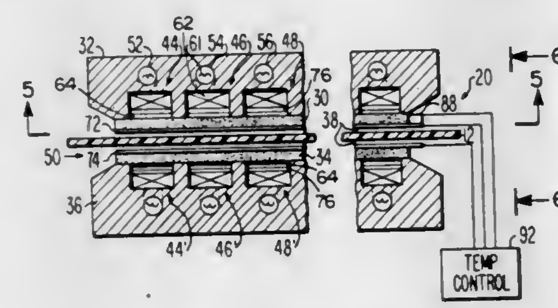

1. In a thermal processor for developing a length of film by heating the same as it passes along a path of a given width in the direction of the length dimension of the path, said processor including thermally conductive gas distribution means comprising a porous homogeneous material through the pores of which gas is distributed to the film over the width of the path, means for supplying said gas to said distribution means, first heating means for heating said distribution means over said width of said path adjacent said distribution means, the improvement comprising:
second heating means extending along the length dimension of said path, thermally conductively secured to the distribution means adjacent to and beyond the edges of said film, when the film is present in said path, for providing heat to said distribution means at the edges of said path adjacent to the edges of the film, to thereby reduce density variation in said film along the width dimension of the film.

4,371,247
ARRANGEMENT FOR ELIMINATING AMMONIA VAPORS FROM DEVELOPED DIAZO COPY MATERIAL
Robert K. Hewelt, 3275 Hagerman, Leonard, Mich. 48038, and Edward F. Dohring, Westland, Mich., assignors to Robert K. Hewelt, Leonard, Mich.
Division of Ser. No. 36,478, May 7, 1979, Pat. No. 4,273,435. This application May 12, 1980, Ser. No. 148,635
Int. Cl.³ G03D *7/00*
U.S. Cl. 354—300 3 Claims

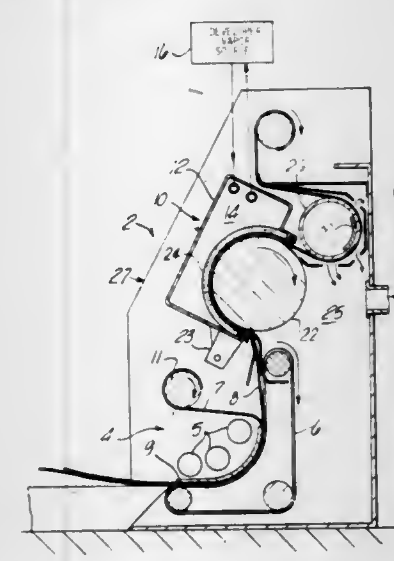

1. A diazo copying machine for developing diazo copy material comprising:
a machine frame;
a development chamber;
means for circulating developer gases through said chamber;
means for causing exposed diazo copy material to be passed through said development chamber, said means including a drive cylinder and means for rotating said cylinder;
said development chamber being comprised in part by a trough extending along the length of said drive cylinder and including means positioning the open face of said trough against said drive cylinder;
a mesh layer secured extending across said open face of said trough to be pressed against said drive cylinder, with said trough in position against said drive cylinder;
feed means for feeding said exposed copy material between said drive cylinder and said mesh layer;
said means positioning said trough including pivotal support means retaining the trough to the frame and enabling swinging movement of said trough about said support means towards and away from said position against said drive cylinder, whereby said trough can be selectively positioned away from said drive cylinder for ready access to the interior thereof for maintenance thereof.

4,371,248
APPARATUS FOR OPENING A FILM PROCESSING KIT
Donald J. Sulesky, Arlington, Mass., assignor to Polaroid Corporation, Cambridge, Mass.
Filed Mar. 1, 1982, Ser. No. 353,426
Int. Cl.³ G03D *5/06*
U.S. Cl. 354—304 6 Claims

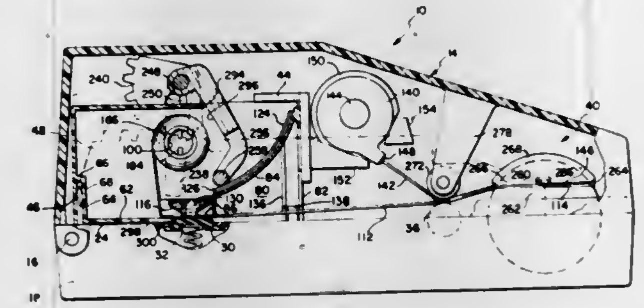

1. Film processing apparatus of the type adapted to receive a disposable kit for use in the processing of an exposed roll of film, the disposable kit including a housing having first and second sections coupled to each other for movement between open and closed positions, a container of processing liquid mounted within the second section, a processing liquid dispenser located adjacent a rupturable end of the container, and a roller supporting a length of flexible sheet material, said film processing apparatus comprising:
a housing having means for locating the disposable kit such that a free end of the sheet material may be operatively joined with a free end of an exposed roll of film, said housing including a loading door movable into a closed position;
means for moving the first section from the closed position to the open position, said moving means being operatively coupled to the first housing of the disposable kit during the positioning of the latter at said locating means;
means for rupturing the processing liquid container located within the kit, said rupturing means being located closely adjacent said locating means when said loading door is in its closed position; and
manually operable means coupled to said moving means and to said rupturing means such that actuation of said manually operable means in a first direction initially drives said moving means to move the first section of the kit's housing toward the open position and thereafter drives said rupturing means into the open housing so as to engage and rupture the container of processing liquid thereby permitting the liquid to flow into the dispenser for subsequent application to the sheet material.

4,371,249
FILM PROCESSING KIT
Frank M. Czumak, Salem, N.H., and Peter K. Fichter, Canton, Mass., assignors to Polaroid Corporation, Cambridge, Mass.
Filed Mar. 1, 1982, Ser. No. 353,427
Int. Cl.³ G03D *5/06*
U.S. Cl. 354—304 6 Claims

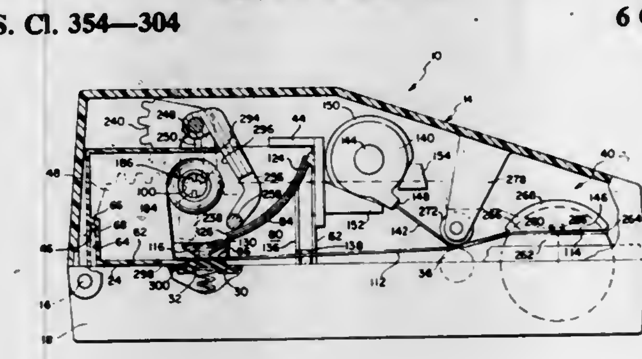

1. A disposable kit configured to be placed within a film processing apparatus wherein it is adapted for use in the processing of a photographically exposed roll of instant type transparency film, said kit comprising:
a housing including first and second sections coupled to each other for movement between open and closed positions;
a container of processing liquid supported within said second section, said container having a rupturable section;
a processing liquid dispenser located adjacent said rupturable section of said container, said dispenser including a nozzle through which the processing liquid is adapted to flow;
a roller rotatably supported within said housing;
a strip of sheet material wound upon said roller with a first end secured to said roller and a second end which extends to a position in engagement with said nozzle and thence to the exterior of said housing, said sheet material being adapted to be partially withdrawn from said housing and superposed with the exposed film to form a laminate having a coating of processing liquid therebetween; and
said first section further includes means cooperable with a component of the film processing apparatus for moving said first section from said closed position to said open position wherein a rupturing mechanism of the film processing apparatus may enter said housing and rupture said container whereby said processing liquid may then flow into said dispenser for subsequent application to said sheet material via said nozzle as said sheet material is being withdrawn from said housing.

4,371,250
DEVELOPING PROCESSOR FOR PRINTING PLATES HAVING A SPRAY TUBE DEVELOPER AGITATOR
Masayoshi Wakabayashi, and Matsuyoshi Taniguchi, both of Shiga, Japan, assignors to Dainippon Screen Manufacturing Co., Ltd., Kyoto, Japan
Filed Oct. 6, 1981, Ser. No. 309,501
Claims priority, application Japan, Oct. 7, 1980, 55-143830[U]
Int. Cl.³ G03D *3/04*
U.S. Cl. 354—325 4 Claims

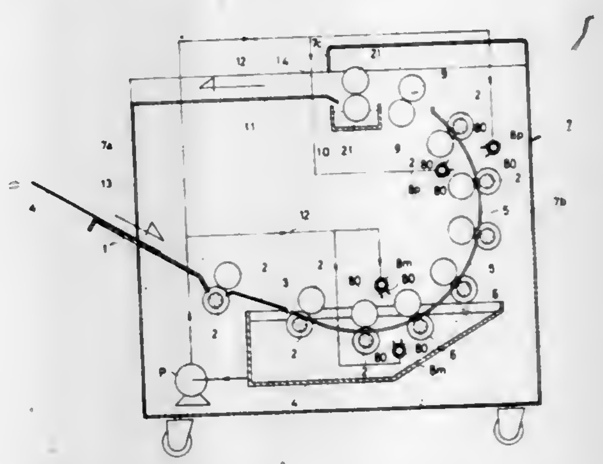

1. A developing processor for printing plates comprising:
a machine housing,
a relatively shallow developer tank disposed at a bottom portion within said housing and holding a developer therein,
a spray tube provided within said housing above said developer tank and adapted to jet developer onto a printing plate to be processed, and
an agitator spray tube having a number of jet holes and disposed in said developer held in said developer tank, said agitator spray tube being connected to said developer tank through a pipe line and a pump and adapted to agitate the developer in the developer tank,
wherein an arrangement is made such that said printing plate to be processed is passed through said developer tank and then treated with the developer jetted from said spray tube.

4,371,251
ELECTROGRAPHIC METHOD AND APPARATUS PROVIDING IMPROVED TRANSFER OF NON-INSULATIVE TONER

Theodore H. Morse, Rochester, N.Y., assignor to Eastman Kodak Company, Rochester, N.Y.
Filed Feb. 27, 1981, Ser. No. 239,100
Int. Cl.[3] G03G *15/00*
U.S. Cl. 355—3 TR **14 Claims**

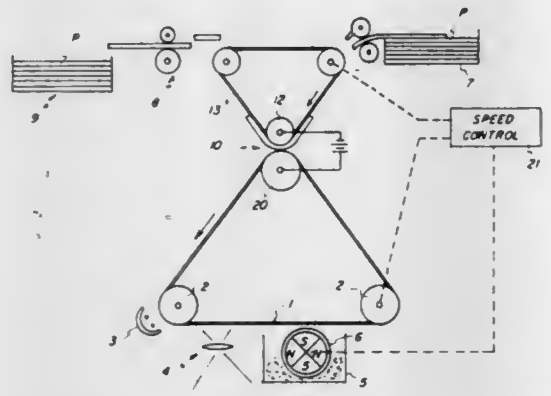

1. In a process for electrographic imaging using an electrically insulative imaging member, electrically non-insulative toner and a transfer member of high relative-conductivity, the improved toner transfer procedure comprising:
(a) moving successive portions of such an imaging member, bearing non-insulative toner having a charge of a first polarity, through a transfer zone;
(b) moving successive portions of such a high relative-conductivity transfer member through said transfer zone in opposing relation to respective portions of the toner bearing surface of said insulative imaging member;
(c) electrically biasing the non-opposing surface of said transfer member portions within said transfer zone at a predetermined potential level, opposite in polarity to said first polarity; and
(d) contacting said opposing transfer member and imaging member portions within said transfer zone for a predetermined contact period not exceeding about 0.030 seconds.

4,371,252
CONTACT TYPE CHARGING DEVICE WITH PLIABLE CONTACT MEMBER

Kohachi Uchida, Sagamihara; Yoshitsugu Nakatomi, Yokohama; Toshimasa Takano, Sagamihara, and Hideo Mukai, Yokohama, all of Japan, assignors to Tokyo Shibaura Denki Kabushiki Kaisha, Kawasaki, Japan
Filed Mar. 6, 1981, Ser. No. 241,113
Claims priority, application Japan, Mar. 10, 1980, 55-30093; Apr. 18, 1980, 55-51242
Int. Cl.[3] G03G *15/02*
U.S. Cl. 355—3 CH **17 Claims**

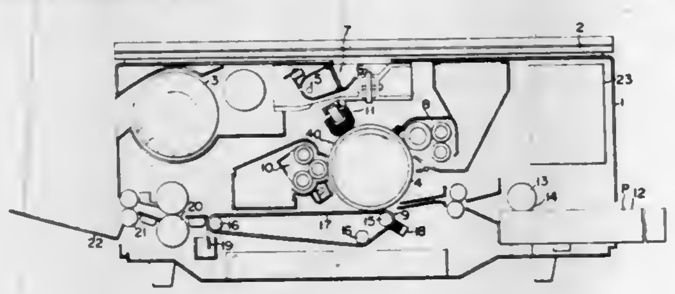

1. A charging device comprising:
a base;
a cushioning layer formed on that portion of said base which faces an object to be charged;
an electrode attached to that side of said cushioning layer which faces said object to be charged;
a contact member connected to said electrode contacting said object to be charged, said contact member having a prescribed electrical resistance greater than the electrical resistance of said electrode, said contact member including a fiber base and a large number of fibers planted on said fiber base;
conductive adhesive for attaching said fiber base to said electrode; and
means for supplying voltage on said electrode to charge said object to be charged.

4,371,253
COLOR ELECTROPHOTOGRAPHIC COPIER

Pierce B. Day, Pittsford, and Carl M. Marsiglio, Spencerport, both of N.Y., assignors to Eastman Kodak Company, Rochester, N.Y.
Filed Jan. 19, 1981, Ser. No. 226,306
Int. Cl.[3] G03G *15/01*
U.S. Cl. 355—4 **9 Claims**

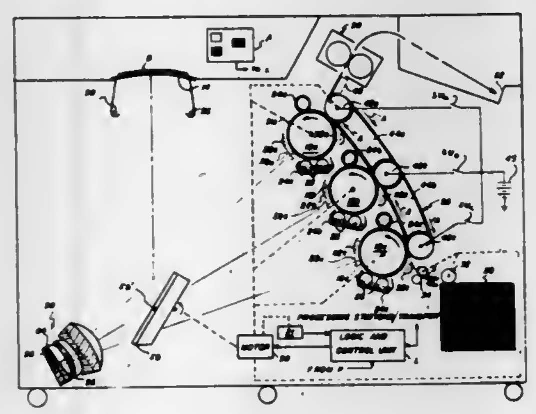

1. In an electrophotographic copier for making multicolor reproductions of a multicolor original document, said copier including photoconductive means, means for forming latent image charge patterns on said photoconductive means respectively corresponding to primary color separation images of the original document, and means for developing such charge patterns with respective complementary colored marking particles, the improvement comprising:
a catadioptric lens assembly optically located between the original document and said photoconductive means, said lens assembly including dichroic mirrors spectrally sensitive respectively to primary colors and tilted respectively relative to each other to separate an image of such original document into primary color separation images and project such images respectively in straight line optical paths toward distinct spatial locations on said photoconductive means.

4,371,254
PROGRAMMED BRAKE FOR CONTROLLING THE SPEED OF A SCANNING CARRIAGE

Jack Beery, Fairport, N.Y., assignor to Xerox Corporation, Stamford, Conn.
Filed Oct. 2, 1980, Ser. No. 193,250
Int. Cl.[3] G03G *15/28*
U.S. Cl. 355—8 **18 Claims**

1. In a reproduction machine having a photoreceptor, an optical system, a carriage, a brake mechanically connected to the carriage, and a platen, the carriage scanning the platen in a first direction for projecting images of objects on the platen onto the photoreceptor, by means of the optical system, and
means for controlling the speed of the scanning carriage including a control
a displacement sensor mounted on the carriage and
a grating including a frame having a plurality of spaced apertures, the grating rigidly secured to the reproduction machine, the senor disposed in relation to the grating to provide signals manifesting the speed of the carriage with respect to the sensor, the control responsive to the signals

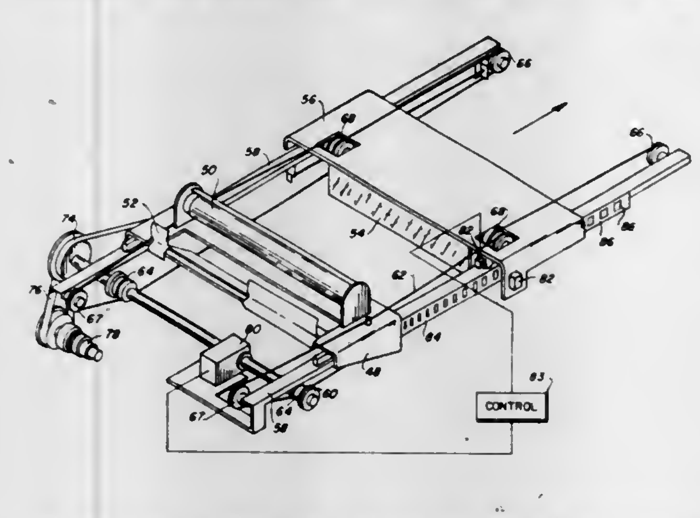

to selectively activate the brake to change the speed of the carriage in a second direction.

4,371,255
ELECTROPHOTOGRAPHIC COPYING METHOD AND APPARATUS OF RECIPROCAL ORIGINAL SCANNING TYPE

Toyokazu Satomi, Yokohama, Japan, assignor to Ricoh Company, Ltd., Tokyo, Japan
Filed Dec. 1, 1980, Ser. No. 211,747
Claims priority, application Japan, Nov. 30, 1979, 54/155837; Dec. 5, 1979, 54/157712
Int. Cl.[3] G03G *15/00*
U.S. Cl. 355—8 **24 Claims**

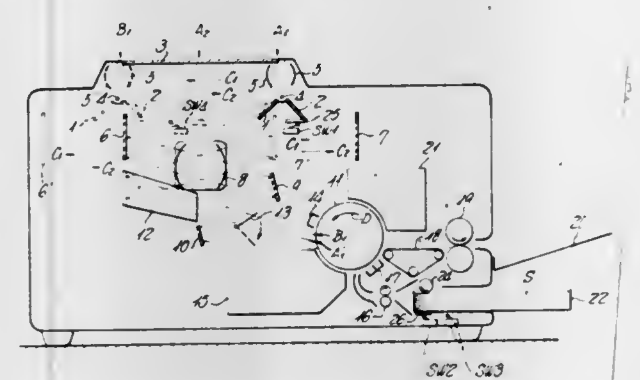

1. In a copying method of moving an original and an optical system relative to each other, while moving the surface of a photoconductor in a predetermined direction, and exposing said photoconductor to an optical image of said original through different exposure optical paths at the forward original scanning and at the backward original scanning by said optical system, the improvement wherein the timing of the transportation of a recording sheet to a recording position is changed at the forward original scanning and at the backward original scanning in relation with the relative shifting of said optical system and said original or the timing of said relative shifting of said optical system and said original is changed with respect to a predetermined timing of said transportation of the recording sheet at the forward original scanning and at the backward original scanning, in order to locate at a proper position on said recording sheet with respect to the longitudinal direction when copies are made from originals other than the maximum size original that can be copied.

4,371,256
APPARATUS FOR HANDLING AN ORIGINAL AND A RECORDING SHEET IN A RECORDING DEVICE

Shigeru Yoshimura, Yokohama, and Katsuichi Shimizu, Hoya, both of Japan, assignors to Canon Kabushiki Kaisha, Tokyo, Japan
Division of Ser. No. 911,141, May 31, 1978, Pat. No. 4,202,621. This application Nov. 27, 1979, Ser. No. 97,862
Claims priority, application Japan, Jun. 3, 1977, 52-65416; Jun. 14, 1977, 52-70074; Jun. 27, 1977, 52-76391
Int. Cl.[3] G03G *15/00*
U.S. Cl. 355—14 SH **20 Claims**

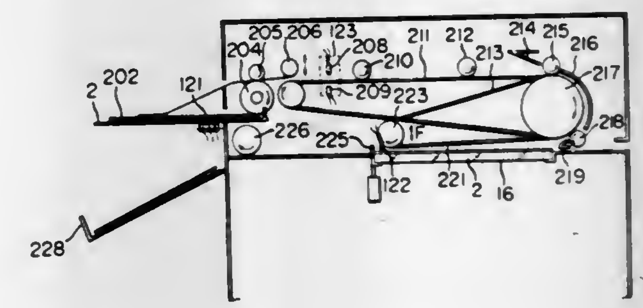

10. A recording device comprising:
(a) mounting means to mount thereon an original carrying to be recorded;
(b) size detection means to detect a size of said original;
(c) a plurality of storing means, each of which stores therein sheet recording mediums in a predetermined size;
(d) image recording means to read the image information on the original placed on said original mounting means by scanning the same, and to record the image information as a visible image onto the sheet recording medium drawn from the selected storing means;
(e) size detection means to detect a size of the sheet recording mediums stored in each of said storing means, and to give notification of the size as detected; and
(f) storage selection means which selects other storing means when the size of the original detected by said size detection means and the size of the sheet recording medium notified by size notifying means in said storing means as selected do not coincide.

4,371,257
AUTOMATIC CONTROLLER OF ELECTRIFICATION OF MAGNETIC TONER

Masaji Nishikawa, Hachioji, Japan, assignor to Olympus Optical Company Limited, Tokyo, Japan
Filed Jul. 8, 1981, Ser. No. 281,392
Claims priority, application Japan, Jul. 14, 1980, 55-95855
Int. Cl.[3] G03G *15/00*
U.S. Cl. 355—14 D **10 Claims**

1. In an automatic controller of electrification of magnetic toner for a developing means having a magnet roll means to magnetically hold and carry developer containing electrically-insulated magnetic toner particles toward a surface to be developed, said magnetic toner particles having magnetic material particles enclosed therein, and an electrifying means related to said magnetic roll means so as to electrify the magnetic toner particles being held by said magnetic roll means, the improvement comprising a detecting electrode disposed adjacent to a position where ear-ups of the developer are formed by said magnet roll means, a bias voltage means applying a bias voltage to said detecting electrode, the polarity of said bias voltage being opposite to that of electric charge on said magnetic toner particles, a light source disposed to project light to the detecting electrode, a photocell disposed to receive the light so as to produce a detection signal representing an amount of the mag-

netic toner particles deposited on said detecting electrode, and a control circuit adapted to control operation of said electrifying means on the basis of said detection signal from said photocell.

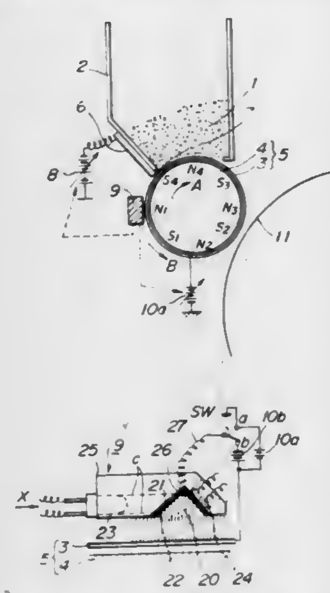

4,371,258

ILLUMINATING DEVICE FOR PHOTOGRAPHIC COPYING APPARATUS

Fred Mast, Wil, Switzerland, assignor to Gretag Aktiengesellschaft, Regensdorf, Switzerland

Filed Aug. 21, 1981, Ser. No. 295,101

Claims priority, application Switzerland, Aug. 25, 1980, 6387/80

Int. Cl.[3] **G03B** *27/54, 27/72*

U.S. Cl. 355—37 **17 Claims**

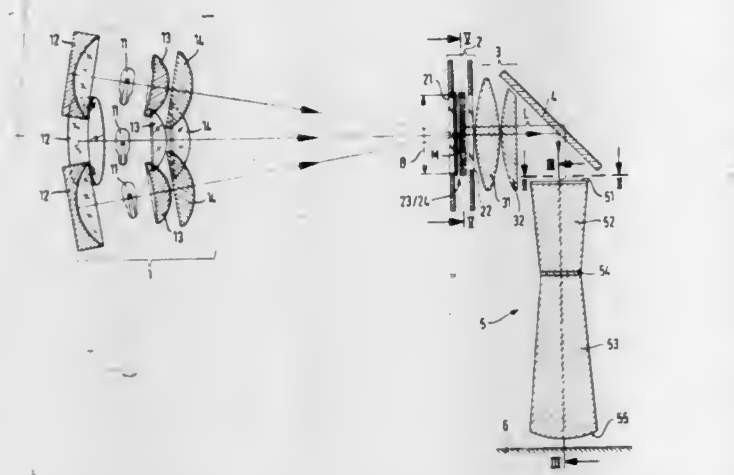

1. In an illuminating device for photographic copying apparatus comprising a light source, an image-producing optical unit, a light-mixing element having a light entry face provided with parallel ribbings, and a filter unit interposed into the path of light rays from the light source to the light-mixing element, which filter unit comprises a window for the passage of light and serves for regulating the color composition of the light emitted by the light source,

the improvement of said ribbings of the light entry face of the light-mixing element being cylindrical lenses arranged in parallel in a row, with every two adjacently located cylindrical lenses being joined with one another forming a sharp edge therebetween and wherein the cylindrical lenses are so dimensioned that the images of the window of the filter unit generated by neighboring cylinder lenses are located adjacent one another substantially free from interspaces therebetween and free from overlappings thereof.

4,371,259

DIGITAL COLOR PRINTER SYSTEM

George L. Howitt, River Edge, N.J., assignor to Charles Beseler Company, Florham Park, N.J.

Filed Jan. 28, 1980, Ser. No. 116,275

Int. Cl.[3] **G03B** *27/73*

U.S. Cl. 355—38 **13 Claims**

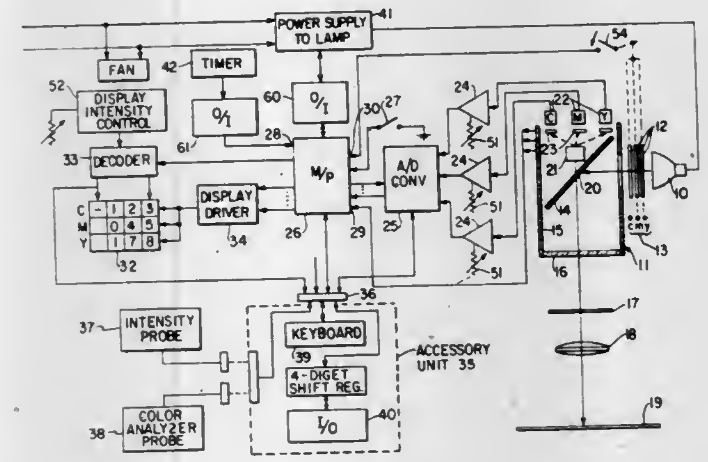

1. An integrated, digital photographic color printer system comprising:

a light source,

variable means for controlling a color mixture of light from the source variably with respect to a set of primary colors,

means for directing the variably controlled light as incident light through a photographic film for projecting an image onto a developable photographic medium,

means including photosensors associated with the light directing means for providing signals indicative of the light intensity of the primary colors in the incident light prior to the passage of the light through the photographic film,

means for converting the primary color intensity signals into digital color values,

a probe interfaced with said microprocessor for measuring the intensity of light projected through the photographic film,

means including a microprocessor for storing system data and programs for system functions and for performing programmed functions of the system, including means for measuring the time of exposure for a print, means for deriving color value data from digital color values corresponding to the primary color intensity signals, and means for deriving exposure data from said light intensity and time measurements,

and means for displaying numerically the derived color value and exposure data.

4,371,260

METHOD FOR SETTING UP HIGHLIGHT AND SHADOW POINT DENSITY VALUES OF ORIGINAL PICTURES TO A PICTURE REPRODUCING MACHINE

Takeshi Yoshimoto; Hideki Hiraoka; Seiji Okazaki, all of Kyoto; Yoshihiro Taniguchi, Otsu, and Tsutomu Harada, Ashiya, all of Japan; assignors to Dainippon Screen Seizo Kabushiki Kaisha, Kyoto, Japan

Filed Mar. 5, 1981, Ser. No. 240,969

Claims priority, application Japan, Mar. 13, 1980, 55-30845

Int. Cl.[3] **G03B** *27/80*

U.S. Cl. 355—77 **3 Claims**

1. A method for setting density values of highlight and shadow points of original pictures in a picture reproducing machine, comprising the steps of:

(a) scanning an original picture while producing a discrimination signal responsive to the scanning of said original picture;

(b) reading highlight and shadow point density values or values corresponding to a density range of said original picture from a memory in which the highlight and the shadow point density values or the values corresponding to the density ranges of original pictures are stored, by addressing the memory by means of said discrimination signal; and

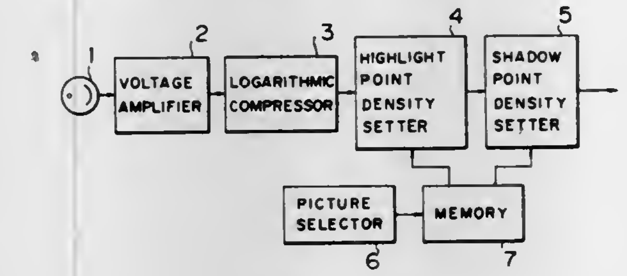

(c) setting the values read from the memory in the picture reproducing machine.

4,371,261

RANGE FINDER

Sadahiko Tsuji, Yokohama, Japan, assignor to Canon Kabushiki Kaisha, Tokyo, Japan

Filed Oct. 14, 1980, Ser. No. 196,442

Claims priority, application Japan, Oct. 16, 1979, 54-133403

Int. Cl.[3] **G01C** *3/08*

U.S. Cl. 356—1 **2 Claims**

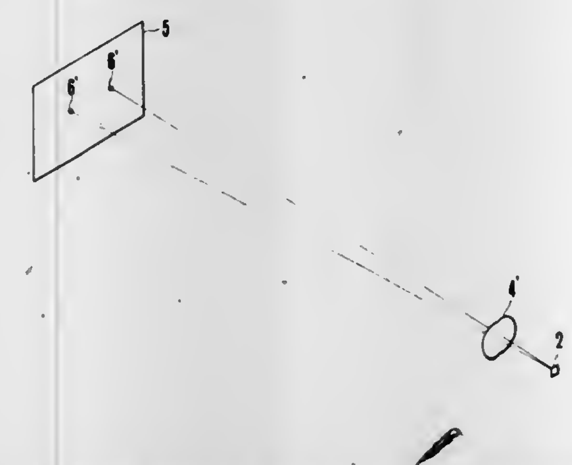

1. A range finder of the active type, comprising an optical system for projecting a light beam onto an object and scanning the object with the light beam, a light receiving element to receive light reflected from the object, said system having a light emitting element for emitting modulated visible light or infrared light, said system further including a beam projection lens composed of a plurality of parts each having a different optical axis and positioned in front of the light emitting element for simultaneously forming a plurality of images on the object.

4,371,262

HOLDER FOR ABSORPTION SPECTROMETER ATOMIZING FURNACE CAPSULES

Rolf G. A. Tamm, Salem, Fed. Rep. of Germany, assignor to Bodenseewerk Perkin-Elmer & Co., GmbH, Uberlinge, Fed. Rep. of Germany

Filed Jun. 23, 1978, Ser. No. 918,628

Claims priority, application Fed. Rep. of Germany, Jul. 7, 1977, 2730614

Int. Cl.[2] **G01J** *3/30*

U.S. Cl. 356—312 **7 Claims**

1. An absorption spectrometer atomizing furnace structure for supporting a closed graphite sample capsule in a flame and between first and second electrical heating current electrodes respectively mounted in fluid-cooled first and second housings having coaxial apertures above and adjacent said sample capsule for the passage of a spectrometer measuring beam, said structure comprising:

a base member;

means for rigidly connecting the first fluid-cooled housing to said base member;

pivot means coupling the second housing to said base member in spaced and facing relationship with said first housing, said pivot means permitting said second housing to swing away from said first housing to facilitate removal and insertion of the graphite sample capsule;

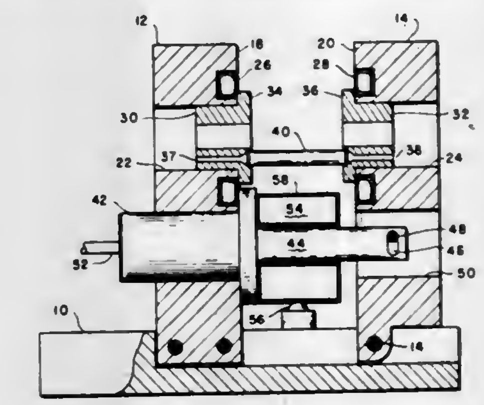

said second housing being pivoted by a pneumatic actuator including a pneumatic cylinder coupled to said first housing and operating a piston rod the distal end which engages a pivot pin coupled to said second housing; and

a burner assembly loosely coupled to said piston rod, said burner assembly comprising an annular chamber having a flat exterior surface section containing a plurality of gas outlets.

4,371,263

DOUBLE MONOCHROMATOR

Wolfgang W. F. Witte, Uberlingen, Fed. Rep. of Germany, assignor to Bodenseewerk Perkin-Elmer & Co., GmbH, Uberlingen, Fed. Rep. of Germany

Filed Jul. 6, 1978, Ser. No. 922,405

Claims priority, application Fed. Rep. of Germany, Jul. 7, 1977, 2730613

Int. Cl.[2] **G01J** *3/18*

U.S. Cl. 356—333 **21 Claims**

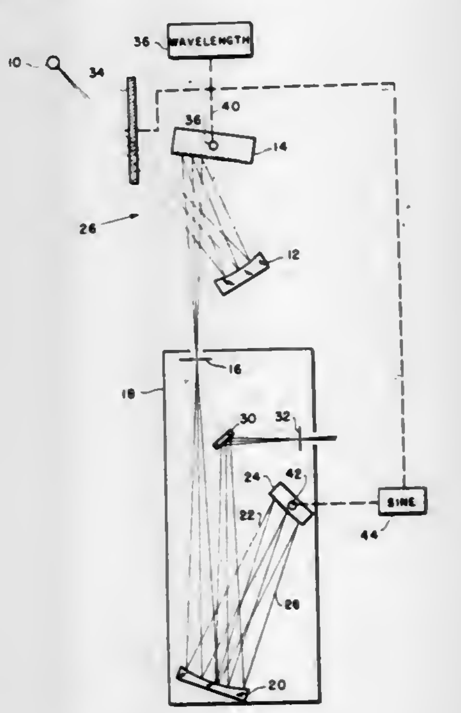

1. A double monochromator comprising:

a first monochromator stage, and

a second monochromator stage having entrance and exit slits,

said first monochromator stage including means for generating, from light rays received from a light source, a first spectral band having a predetermined bandwidth, and

means for imaging said first spectral band at the entrance slit of said second monochromator stage;

said second monochromator stage including means for generating from the first spectral band of light imaged at the entrance slit, a second spectral band having a predetermined bandwidth, and means for imaging said second spectral band at the exit slit of said second monochromator stage;

the generating means of said first monochromator stage being disposed to generate a spectral bandwidth substantially greater than the spectral bandwidth generated by the generating means of said second monochromator stage.

4,371,264

OPTICAL SYSTEM FOR ALIGNING TWO PATTERNS AND PHOTO-REPEATER USING SUCH A SYSTEM

Michel Lacombat, and Georges Dubroeucq, both of Paris, France, assignors to Thomson-CSF, Paris, France

Filed Feb. 25, 1980, Ser. No. 124,077

Claims priority, application France, Feb. 27, 1979, 79 05007

Int. Cl.^{3} G01B *11/00;* G02B *5/18*

U.S. Cl. 356—356 **20 Claims**

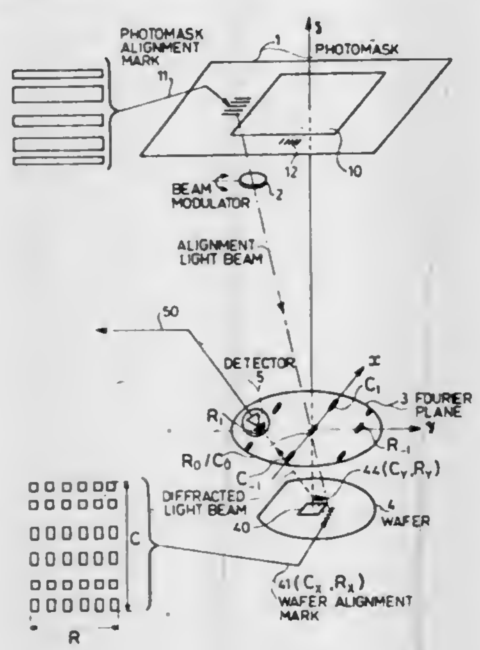

1. An optical system for aligning along a plurality of aligning axis at least a first pattern, carried by a first mobile medium, in relation to a second pattern, carried by a second medium, forming a first fixed reference, said system comprising for each alignment axis:

first and second patterns each comprising at least one principal optical network formed by a series of parallel strokes whose width and spatial distribution in a first direction are parallel to its respective alignment axis and are determined by a particular distribution code where the strokes of the first pattern are interrupted periodically in a second direction to form an optical network having a constant pitch in said second direction;

a monochromatic source of light energy combined with optical means for illuminating said first pattern by projection on said first pattern of the image of said second pattern with a predetermined magnification and for producing orders of diffraction in said first and second direction; and

means for detecting the intensity of a predetermined part of non-zero order patterns of said orders of diffraction in the second direction, said detected intensity passing through a maximum with accurate alignment being obtained when the spatial correlation of said first pattern and of the projection of the image of said second pattern on said first pattern is a maximum.

4,371,265

DOT PERCENTAGE MEASURING DEVICE

Yuji Mitsuhashi, Fujisawa, Japan, assignor to Dai Nippon Insatsu Kabushiki Kaisha, Tokyo, Japan

Division of Ser. No. 941,174, Sep. 11, 1978, Pat. No. 4,264,210. This application Sep. 23, 1980, Ser. No. 190,171

Claims priority, application Japan, Sep. 13, 1977, 52-110150; Mar. 25, 1978, 53-38440

Int. Cl.^{3} G01N *21/01*

U.S. Cl. 356—432 **1 Claim**

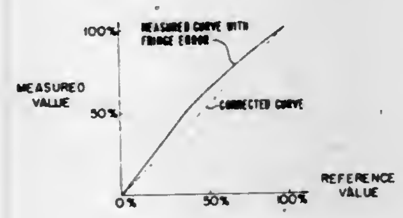

1. A dot percentage measuring means comprising:

a light receiving section provided inside a measuring washing table; and

a light emitting section adapted to emit a predetermined intensity of light to a radiated object to be measured on said measuring table, said light emitting section being fixedly provided to confront said light receiving section to measure a dot percentage a transmitting density of said object from a quantity of light passed through said object.

4,371,266

TELEVISION GHOST DETECTOR SYSTEM

David D. Holmes, Chesterfield, N.J., assignor to RCA Corporation, New York, N.Y.

Filed Jan. 30, 1981, Ser. No. 230,310

Claims priority, application United Kingdom, Aug. 14, 1980, 8026515

Int. Cl.^{3} H04N *5/21*

U.S. Cl. 358—167 **6 Claims**

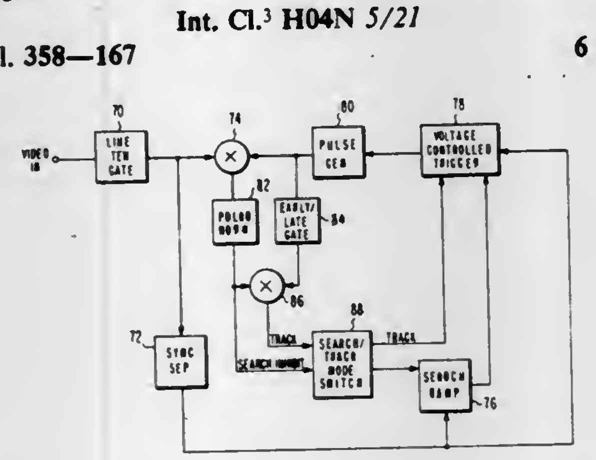

1. In a television receiver, including a source of video signals which may be contaminated with a ghost signal, said video signals including a component subject to use as a training signal, a television ghost detection system comprising:

means responsive to said video signals and having an output for passing a portion of said video signals which includes said training signal and a ghost of said training signal when a ghost signal is present;

a reference signal circuit having an input responsive to said training signal for producing a varying reference signal at an output;

signal generating means having an input coupled to the output of said reference signal circuit and an output, and responsive to said reference signal for producing, in a first mode of operation, a sequence of search signals;

a coincidence detector having a first input coupled to said output of said video signal portion passing means, a second input coupled to the output of said signal generating means, and an output at which a coincidence signal is produced, when said signal generating means is operating in said first mode, in response to the application of a ghost of said training signal to said first input in time coincidence with the application of a search signal to said second input; and

means, coupled between the output of said coincidence detector and said reference signal circuit, and responsive to said coincidence signal for storing the level attained by said varying reference signal when said coincidence signal is produced,

wherein said stored reference signal level is representative of the delay of said ghost signal of said video signals with respect to said video signals.

4,371,267

TIME DETECTING DEVICE FOR ALARM CLOCK

Masuo Ogihara; Nobuo Shinozaki; Tadashi Ishikawa, and Yoichi Seki, all of Shikawatashi, Japan, assignors to Seiko Koki Kabushiki Kaisha, Japan

Filed Dec. 19, 1980, Ser. No. 218,180

Claims priority, application Japan, Jan. 17, 1980, 55-3942

Int. Cl.^{3} G04B *23/02;* G04C *21/16*

U.S. Cl. 368—74 **3 Claims**

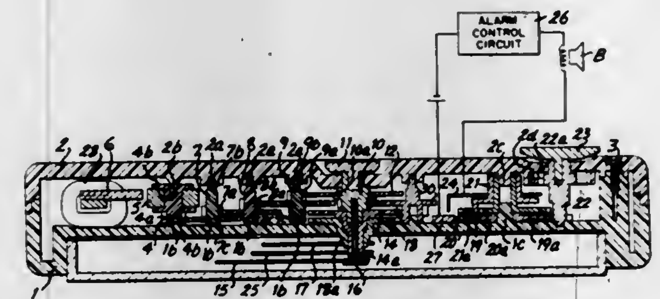

1. In an alarm clock comprising an hour gear wheel for indicating time, an alarm gear wheel for indicating alarm time, and a second hour gear wheel and a second alarm gear wheel engaging with said hour gear wheel and said alarm gear wheel respectively, and adapted to actuate an alarm device in coincidence of the respective phases of said second alarm gear wheel, a time detecting mechanism characterized by provision of an axially shiftable alarm cam plate having a guide face at which said alarm cam plate is continuously pushed and turned by said second hour gear wheel and a projection penetrating through said second hour gear wheel and related with a cavity formed on said second alarm gear wheel for detecting alarm time.

4,371,268

TIME CORRECTING CIRCUIT FOR TIMEPIECE WITH ELECTROCHROMIC DISPLAY

Hiroshi Miyasaka, and Shinji Yamada, both of Saitama, Japan, assignors to Rhythm Watch Company Limited, Tokyo, Japan

Filed Dec. 24, 1980, Ser. No. 219,910

Claims priority, application Japan, Dec. 28, 1979, 54-170966; Nov. 18, 1980, 55-162154

Int. Cl.^{3} G04C *19/00, 9/00*

U.S. Cl. 368—82 **5 Claims**

1. A time correcting circuit for a timepiece with electrochromic display comprising:

a means for generating time standard clock signals;

a timing circuit having counters for counting said time clock signals and for generating time display output signals;

a time display circuit having an electrochromic display section for displaying said output signals from said counters;

a correction mode changeover switch for selectively switching between a time display mode and time correction mode;

a correcting circuit which functions only when said correction mode is selected to change the contents of said counters in said timing circuit;

a writing and erasing control circuit for controlling the timing of writing and erasing of said electrochromic display section in response to the selected mode of said correction mode changeover switch; and

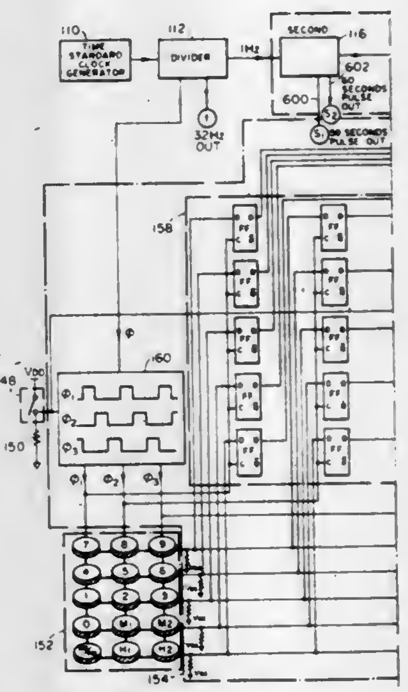

a correction pulse generating circuit for outputting time correction writing pulses of a smaller pulse width than writing and erasing pulses during normal time display when said correction mode is selected by said correction mode changeover switch.

4,371,269

D-C VOLTAGE CONVERTER FOR A WRISTWATCH

Hans-Rudolf Sutter, Pieterlen, Switzerland, assignor to Bulova Watch Co., Inc., Flushing, N.Y.

Filed Sep. 9, 1980, Ser. No. 185,493

Int. Cl.^{3} G04C *10/04*

U.S. Cl. 368—205 **15 Claims**

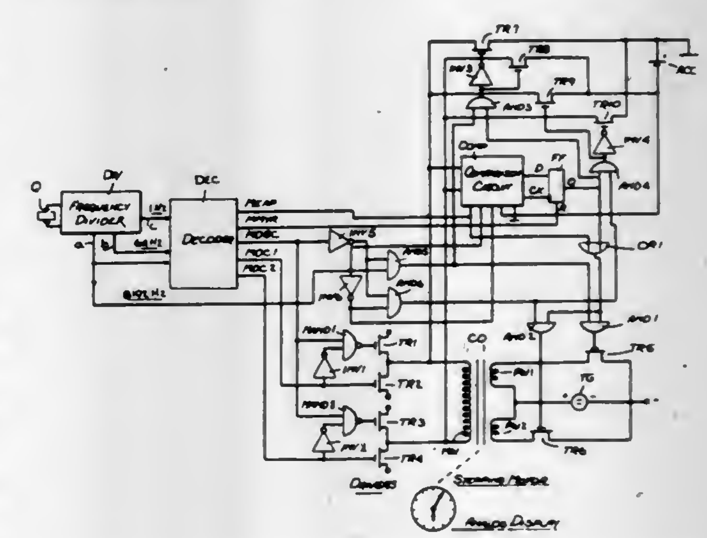

1. An electronic wristwatch provided with a low voltage d-c supply source and an electronic circuit having a high-frequency time base whose output is coupled to a multi-stage frequency divider whose output stage yields low-frequency timing pulses to actuate a time display, and a converter which functions to increase the voltage of the source to a level sufficient to energize the electronic circuit, said converter comprising:

(A) a transformer having a primary and a secondary;

(B) a periodically-actuated chopper interposed between the

source and the primary whereby an a-c voltage is induced in the secondary;

(C) a rectifier circuit connected to the secondary and having at least one controllable switch element; and

(D) means to derive intermediate frequency pulses from an intermediate stage of the divider to govern the on-off state of said switch element in synchronism with the periodically-actuated chopper to cause said element to effect rectification of the a-c voltage.

4,371,270

BLOCK SIGNAL FORMING DIGITAL PROCESSOR WITH ERROR CORRECTION

Yasuhiro Yamada, Fujisawa, Japan, assignor to Victor Company of Japan, Ltd., Yokohama, Japan

Continuation of Ser. No. 85,320, Oct. 16, 1979, abandoned. This application May 22, 1981, Ser. No. 266,611

Claims priority, application Japan, Oct. 17, 1978, 53-127718

Int. Cl.³ G06F *11/10*

U.S. Cl. 371—38 **8 Claims**

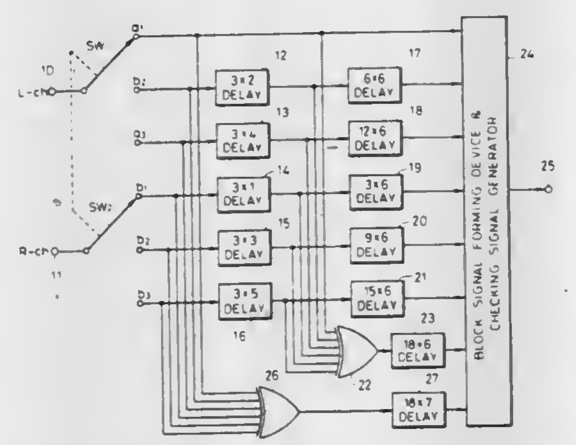

1. A digital signal processing apparatus for use in recording a composite digital signal composed of modulated digital signals, obtained by digitally processing an information signal with a specific sampling period and composite synchronizing signals, and reproducing the same to restore an original information signal, said digital signal processing apparatus comprising:

time-multiplexing means provided with an input signal;

a first correction signal generation circuit supplied with the output of said time-multiplexing means, in which, by considering a digital signal of one sampling period as an element, and from a group S comprising a plurality of said elements, each of m (m is a given integer) elements undergo a modulo-2 addition, forming a first correction signal p by use of said elements of said group S without duplication, for producing a group P of said first correction signal p by similarly using all the elements in said group S only once;

a first delay device group supplied with the output of said time-multiplexing means, for selecting n (n is a given integer) elements at a time from said group S without duplication with less than or equal to one element in common with said generation element of said correction signal p;

a second correction signal generation circuit supplied with the output of said first delay device group, for forming a second correction signal q by the modulo-2 addition of said selected elements from said first delay device group, and also similarly producing a group Q comprising said second correction signal q by using all the elements in said group S only once;

a second delay device group supplied with the outputs of said first and second correction signal generation circuits, for producing L/m (L is a multiple of m and n) first correction signal p and L/n second correction signal q of said groups P and Q, respectively, in response to the outputs of said first and second correction signal generation circuits;

a third delay device group supplied with the output of said first delay device group, for selecting L elements of said group S excluding said elements forming said first and second correction signals from the output of said first delay device group;

a block signal forming device supplied with the outputs of said second and third delay device groups, for generating an output block signal which is recorded onto a recording medium in the form of a digital signal; and

a restoration circuit supplied with the first and second correction signals together with the generation elements thereof, both of which are reproduced from the recording medium, to restore the generation elements;

said block signal forming device forming the block signal from the outputs of said second and third delay device groups and an error checking signal, in such a manner that the delayed first and second correction signals p and q and their generation elements form mutually different block signals.

4,371,271

ELECTRONIC THERMOMETER

Jean-Marie Bellet, Geneva, Switzerland, assignor to Bioself International Inc., Nassau, The Bahamas

Filed Jun. 4, 1980, Ser. No. 156,447

Claims priority, application Switzerland, Jun. 7, 1979, 5337/79

Int. Cl.³ G01K *07/22*

U.S. Cl. 374—183 **5 Claims**

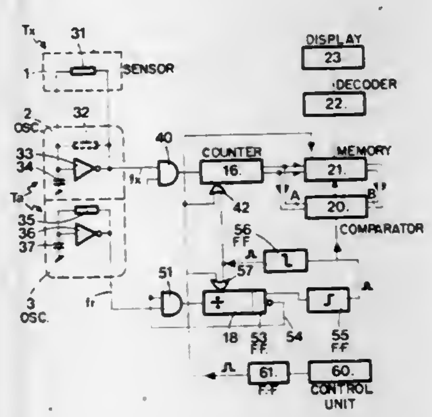

1. An electronic thermometer comprising: a temperature sensor comprising a remotely located variable resistance element whose resistance value varies as a function of the temperature and adapted to be put in contact with an area the temperature of which is to be measured, a measuring oscillator directly coupled with said variable resistance element and providing a first frequency depending on the value of said resistance, a reference oscillator providing a second, predetermined reference frequency, means for counting the number of cycles of the first frequency, means including divider means for establishing a base equal to a predetermined number of cycles of said reference frequency, means interconnecting said establishing means and said counting means for counting the number of cycles of said first frequency occurring during said predetermined number of cycles of said second frequency, and digital circuit means for providing an indication of the measured temperature in response to the result provided by the counting means, both oscillators being located immediately adjacent one another, so that any ambient temperature or power supply drift fluctuations simultaneously affects the frequencies of the two oscillators in the same fashion, the result of the counting thereby being substantially unaffected by any said drift fluctuations.

4,371,272

THERMODETECTOR

Shinichiro Iwasaki, Auburn Heights, Mich., assignor to Aisin Seiki Company, Limited, Kariya, Japan

Filed Aug. 29, 1980, Ser. No. 182,702

Int. Cl.³ G01K *7/38*

U.S. Cl. 374—184 **13 Claims**

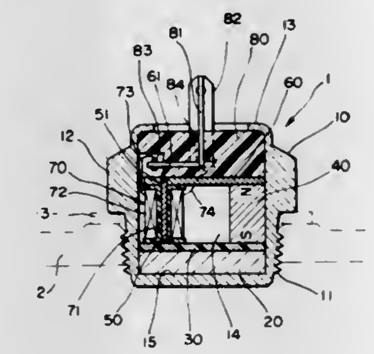

1. A thermodetector comprising:

a ferromagnetic member disposed on an object whose temperature is to be measured and having a magnetic characteristic which changes in response to a change in temperature;

means for generating a magnetic field coupling said ferromagnetic member;

a magnetically soft core member thermally isolated from said ferromagnetic member and also coupling the magnetic field generated by said means for generating a magnetic field;

an electric coil wound around said magnetically soft core member;

wherein a magnetic circuit is formed, including at least said means for generating a magnetic field, said ferromagnetic member and said magnetically soft core member;

detector means for detecting a change of intensity of magnetic flux produced in said core member by the magnetic field of said permanent magnet means in response to a thermally induced change in the magnetic characteristic of said ferromagnetic member, comprising,

means for applying a pulse voltage to said at least one coil, and

means for measuring the time delay occurring from the application of said pulse voltage until saturation of said core means;

wherein a change in temperature causes a change in said magnetic characteristic of said ferromagnetic member which in turn causes a change in the amount of flux coupling said core member which is detected by said detector means.

4,371,273

ELECTROCHEMICAL PRINTHEAD

Arthur H. Kendall, Franklin Lakes, N.J.; Joseph W. Mitchell, Montrose, and Carlos J. Sambucetti, Croton-on-Hudson, both of N.Y., assignors to International Business Machines Corporation, Armonk, N.Y.

Filed Jan. 16, 1981, Ser. No. 225,688

Int. Cl.³ B41J *3/12, 3/20*

U.S. Cl. 400—119 **22 Claims**

1. An electrochromic printhead for an electrochromic printing arrangement in which electrical pulses are selectively applied to active electrodes spaced in a printing array while a paper coated with a superficial aqueous conductive liquid is passed therebeneath, comprising:

a. a printhead housing having an array of spaced, precisely positioned, small cylindrical apertures therethrough fabricated from an array of small hollow glass tubes positioned side by side relative to each other, to define a printing array along a printing surface of the printhead housing extending substantially perpendicular to the cylindrical axes of said apertures;

b. each cylindrical aperture having a conductor therein forming one active electrode for actuation of the electrochemical printer, each conductor being sealed relative to its cylindrical aperture in the hollow glass tube such that the superficial aqueous conductive liquid is prevented from flowing or entering therein; and

c. at least one additional conductor, defining a reference electrode, extending to said printing surface, whereby a voltage may be applied between selected active electrodes and said at least one reference electrode to define a printing pattern at said surface.

12. A method of fabricating an electrochromic printhead used in an electrochromic printing method in which electrical pulses are selectively applied to active electrodes spaced in a printing array while a paper coated with a superficial aqueous conductive liquid is passed therebeneath, comprising:

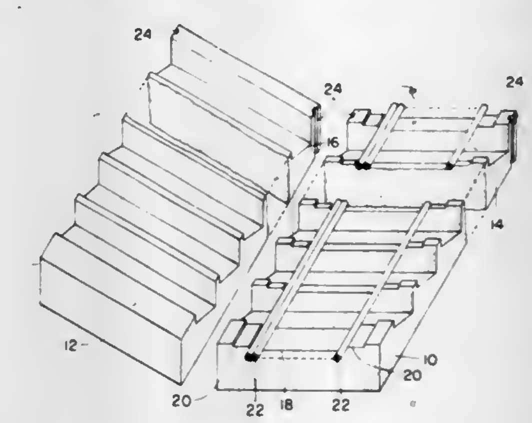

a. forming a printhead housing with an array of spaced, precisely positioned, small cylindrical apertures therethrough from an array of small hollow glass tubes positioned side by side relative to each other, to define a printing array along a printing surface of the printhead housing extending substantially perpendicular to the cylindrical axes of said apertures;

b. placing a conductor within each cylindrical aperture with the conductor being sealed relative to its cylindrical aperture to form one active electrode for actuation of the electrochemical printer, with the sealed conductor in the cylindrical aperture preventing the superficial aqueous conductive liquid from entering therein; and

c. placing at least one additional conductor, defining a reference electrode, at said printing surface, whereby a voltage may be applied between selected active electrodes and said at least one reference electrode to define a printing pattern at said surface.

4,371,274

APPARATUS FOR DOT-MATRIX PRINTING WITH PROPORTIONAL CHARACTER SPACING

Klaus Jaeger, Puchheim, Fed. Rep. of Germany, assignor to Siemens Aktiengesellschaft, Berlin and Munich, Fed. Rep. of Germany

Filed Sep. 29, 1980, Ser. No. 191,401

Claims priority, application Fed. Rep. of Germany, Oct. 17, 1979, 2942058

Int. Cl.³ B41J *3/12, 19/58*

U.S. Cl. 400—121 **4 Claims**

1. An apparatus for dot-matrix printing of characters for use with an input device and an incrementally advanceable printer carriage comprising:

a character generator in which said characters are stored in binary bit form in respective matrices of columns and rows, said matrices being of equal size regardless of the actual width of characters stored therein such that a plurality of columns in a number of said matrices are unoccupied by character bits, one incremental advance of said

printer carriage normally corresponding to one column in the storage matrix of a character to be printed;

a character control unit connected to said input device and to said character generator, said character control unit operable in a fixed character spacing state and a proportional character spacing state depending upon the type of character to be printed as received from said input device; and

a printer control unit connected to said character control unit for controlling the incremental advancement of said printer carriage, said printer control unit operable, when

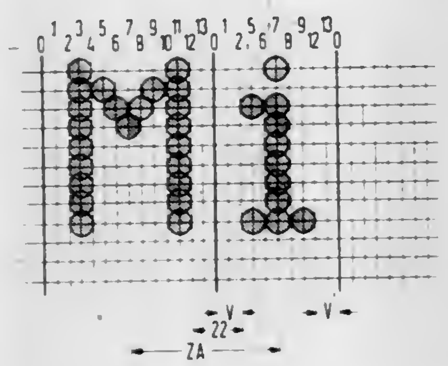

said character control unit is in said proportional character spacing state, for initially advancing said printer carriage by a first fixed number of increments, inhibiting advancement of said printer carriage until an occupied column in said storage matrix, advancing said printer carriage in single-column increments for columns in the storage matrix of a character to be printed which are occupied by a character bit, and for advancing said printer carriage a second fixed number of increments for the total number of unoccupied columns remaining in the respective storage matrix for a character.

4,371,275

SELECTOR SYSTEM FOR A SINGLE TYPE CARRIER IN TYPEWRITERS AND SIMILAR PRINTING MACHINES

Walter Albrile, Turin, Italy, assignor to Ing. C. Olivetti & C., S.p.A., Ivrea, Italy

Filed May 12, 1981, Ser. No. 263,100

Claims priority, application Italy, Dec. 28, 1979, 69487 A/79

Int. Cl.³ B41J *1/60*

U.S. Cl. 400—161.3 **14 Claims**

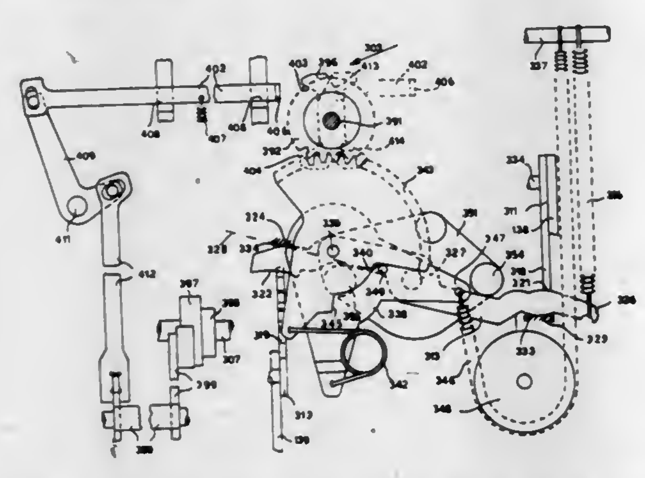

1. In a selector system for a type carrier of a typewriter comprising a support, an intermediate lever pivoted on the support and operatively connected with the type carrier for the selection of a character of the type carrier and two groups of stop members selectively settable in dependence on the character to be selected, the combination comprising:

a substantially rectilinear selector lever having a longitudinal axis and including a central zone and two stop and fulcrum shoulders lying on opposite zones of said longitudinal axis with respect to said central zone, wherein each of said two shoulders is cooperative with an associated group of said two groups of settable stop members and wherein a set stop member of said group lies at a different distance from the associated shoulder;

means pivoting the central zone of said selector lever on said intermediate lever for causing the typing member to select a different character in response to a variable displacement of said central zone;

driving spring means for rotating said selector lever with respect to said intermediate lever according to a predetermined sense of rotation;

a forked member having two arms substantially symmetrical with respect to the central zone of the selector lever and operable to hold the selector lever in a rest position against the action of said driving spring means;

means for releasing said forked member for causing the selector lever to be operated by said driving spring means up to the arrest of one of said stop and fulcrum shoulders against a set stop member, with following displacement of said central zone and selection of the desired character, wherein a set stop member of one group of stop members causes a rotation of the intermediate lever along one sense of rotation and the set stop member of the other group of stop members causes a rotation of the intermediate lever along another sense of rotation opposed to said one sense of rotation; and

means restoring the forked member for causing the selector lever and the intermediate lever to return to said rest position on completion of the typing of the selected character.

4,371,276

SHEET STACKING OUTPUT TRAY

Svetislav Mitrovich, Dallas, and Ronald L. Beaty, Alvarado, both of Tex., assignors to Xerox Corporation, Stamford, Conn.

Filed Jul. 31, 1980, Ser. No. 174,301

Int. Cl.³ B65H *29/58*

U.S. Cl. 400—625 **5 Claims**

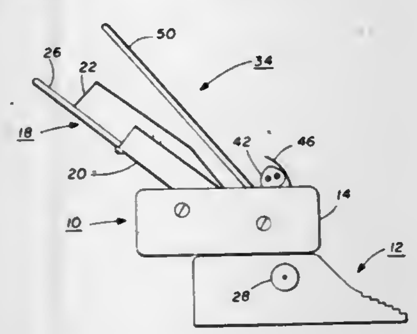

1. In a cut sheet feeding apparatus for use with an independently operable printing machine and having an input tray for storing a plurality of sheet members, sheet feeding means for feeding sheet members in singular sequence from said input tray to said printing machine, the improvement comprising:

feed rollers operatively positioned to receive sheet members in singular sequence from said printing machine and feed said sheet members upwardly in a vertical direction;

an output tray operatively positionable in either of a first or a second position to receive said sheet members from said feed rollers;

deflection means attached to said output tray to deflect the vertically moving sheet members toward said output tray after passing through said feed rollers; and

mounting means to operatively position said output tray in either of a first or a second position, whereby the output tray, when in a first position, receives sheets in a stacked sequence in the same order that the sheets were in when in the input tray, and, when in the second position, receives sheets in a stacked sequence in the reverse order that the sheets were in when in the input tray.

4,371,277

AUTOMATIC PENCIL

Hidehei Kageyama, and Takahiko Suzuki, both of Kawagoe, Japan, assignors to Kotobuki & Co., Ltd., Saitama, Japan

Filed Jun. 2, 1981, Ser. No. 269,760

Claims priority, application Japan, Jul. 25, 1980, 55-105958[U]; Mar. 19, 1981, 56-38405[U]; Mar. 19, 1981, 56-38408[U]

Int. Cl.³ B53K *21/02*

U.S. Cl. 401—54 **7 Claims**

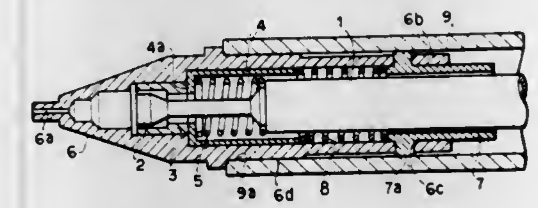

1. An automatic pencil comprising:

(a) an outer tube adapted to be gripped by the user;

(b) an end cap, said end cap being assembled in engagement with said outer tube by inserting the backward end of said end cap into said outer tube;

(c) a lead holding and pushing-out mechanism disposed within said outer tube, said mechanism comprising a lead container, a lead chuck secured to said container, a chuck ring externally fitted onto said lead chuck, and a spring disposed in said end cap and engaging said container;

(d) a stopper disposed within said outer tube and engaging said end cap;

(e) said end cap having a plurality of circumferentially displaced openings therein near the open end of said end cap and said stopper having projections on the outer periphery thereof engaging said openings in said end cap; and

(f) a resilient element engaging said stopper and said lead holding and pushing-out mechanism for cushioning pressure applied to the lead.

4,371,278

MUSICAL PEN

Hong K. Joo, 1035-5, Nonbyun-dong, Kangnam-ku, Seoul, Rep. of Korea

Filed Feb. 20, 1981, Ser. No. 236,589

Claims priority, application Rep. of Korea, Jun. 7, 1980, 1980/3636

Int. Cl.³ B43K *29/00;* **G10D** *11/00;* **A63H** *5/00*

U.S. Cl. 401—195 **7 Claims**

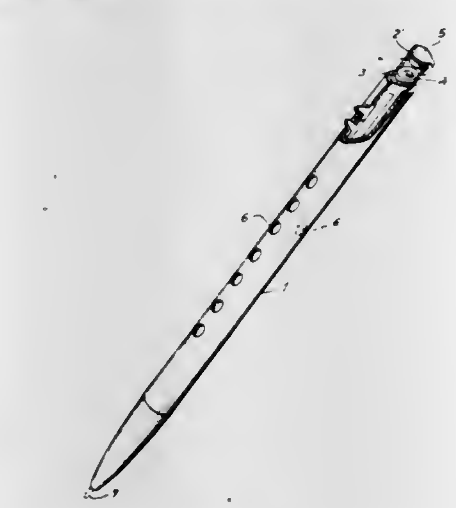

1. A musical pen comprising

(A) a barrel having a pair of opposed end openings and a plurality of longitudinally aligned side openings along the length thereof;

(B) a pipe at least partially disposed within said barrel, said pipe defining an aperture therethrough providing communication between the upper of said end openings and said plurality of side openings;

(C) a resilient strip secured to the top of said pipe, extending at least partially across said aperture and adapted to vibrate with the passage of varying levels of air through said aperture; and

(D) means for writing at least partially disposed within said barrel and adapted to extend partially through the lower of said end openings.

4,371,279

STRUCTURAL JOINT

John Prussen, 1971 Horatio Ave., Merrick, N.Y. 11566, and Paul Gossen, 333 West End Ave., New York, N.Y. 10023

Filed Sep. 22, 1980, Ser. No. 189,175

Int. Cl.³ B25G *3/00;* **F16D** *1/00;* **F16G** *11/00*

U.S. Cl. 403—8 **11 Claims**

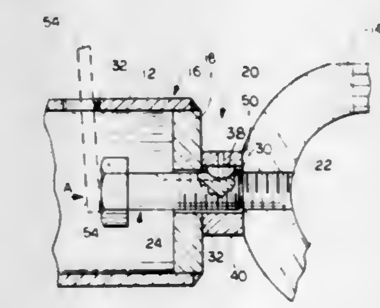

1. A structural joint for a space frame comprising a connecting member having a threaded opening therein; a structural member having at least one hollow end portion including an aperture formed in said end portion, a connecting bolt having a head located in said hollow end portion of the structural member and a shank extending through said aperture, said shank having a free end and being threaded over a major portion of its length between said head and said free end, said shank further having a longitudinally extending keyway formed therein and extending through at least part of the threaded portion thereof, a key received in said slot, and a nut engaged with said bolt shank on the exterior of said structural member, said nut having an unthreaded circular aperture formed therein receiving said shank and an internal keyway formed on the inner surface of the aperture receiving a portion of said key, and said key being slidable in both said keyways whereby said nut may be rotated to rotate said bolt and engage the shank thereof in the threaded opening of said connecting member.

4,371,280

SHACKLE ASSEMBLY FOR MOTOR VEHICLE COMPRESSION STRUTS

Günther Handke, Euerbach, and Hans Hepp, Schweinfurt, both of Fed. Rep. of Germany, assignors to Fichtel & Sachs AG, Schweinfurt, Fed. Rep. of Germany

Filed Jul. 17, 1980, Ser. No. 169,720

Claims priority, application Fed. Rep. of Germany, Aug. 8, 1979, 2932138

Int. Cl.³ F16B *2/08*

U.S. Cl. 403—13 **18 Claims**

1. A shackle assembly for fastening compression struts at steering knuckles in the wheel suspension of a motor vehicle comprising: an outer enveloping strap; an inner counter strap; said straps being arranged together to define a compression strut span within which a compression strut may be received; means defining holes adapted to receive therein fastening screws extending through both said inner and said outer straps, said holes being located in portions of said straps other than the

portions thereof defining said compression strut span; said holes defined through said dinner counter strap being formed

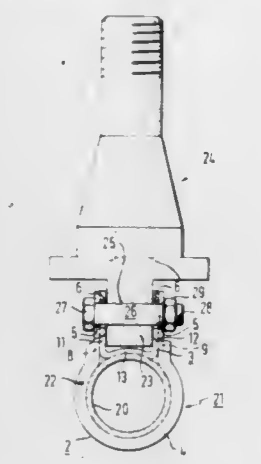

with a larger diameter than the holes defined through said outer enveloping strap.

4,371,281
ROD CLAMP
Bengt Magner, Mellösa, Sweden, assignor to Opto-System AB, Mellosa, Sweden
Filed Mar. 25, 1981, Ser. No. 247,597
Claims priority, application Sweden, Mar. 31, 1980, 8002442
Int. Cl.³ F16D *1/00, 3/00*
U.S. Cl. 403—219 **11 Claims**

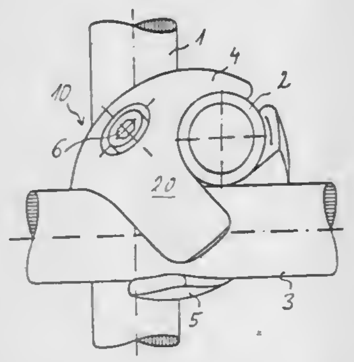

1. A clamp for releasably connecting a plurality of elongate members comprising two half portions and securing means for mutually securing said half portions, each half portion comprising an inner face with a central region on which central region an annular collar is disposed and through which collar a hole for said means is provided, and a plurality of lobes extending from said central region said lobes being provided with lands which cooperate in use of the clamp with respective elongate members.

4,371,282
SLEEVE FOR CONNECTING A HANDLE TO A TOOL
Bernd Sturm, Reichelsheim, Fed. Rep. of Germany, assignor to Coronet-Metallwarenfabrik GmbH, Wald-Michelbach, Fed. Rep. of Germany
Filed Sep. 10, 1980, Ser. No. 185,897
Claims priority, application Fed. Rep. of Germany, Sep. 20, 1979, 2937967
Int. Cl.³ B25G *3/28*
U.S. Cl. 403—277 **13 Claims**

1. A hollow sleeve for connecting a round tubular handle originally configured smooth on one end to a tool comprising:
(a) a conical end part having outside threading for engaging the tool; and
(b) a profiling on the inside face of the sleeve for fixing the end of the handle, the profiling including inward projections arranged in a star-shape and rising out of the inside face of the sleeve at a distance from the larger edge of the sleeve at a distance from the larger edge of the sleeve to a distance from a smaller bottom edge in a continuous slope until ending to form nosepieces which project out of the inside face of the sleeve,

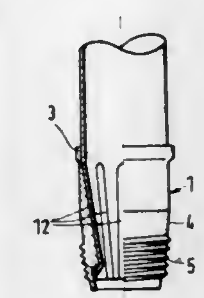

whereby when the handle is fully inserted into the sleeve, the projections form indentations in the originally smooth end of the handle, and the end of the handle projects into the sleeve beyond the nosepieces and is splayed on its entire periphery against the nosepieces.

4,371,283
PROTECTION CHAMBER
Horst Lampertz, Schmalenbachstrasse 13, D-1000 Berlin 44, Fed. Rep. of Germany
Filed Apr. 7, 1981, Ser. No. 251,783
Claims priority, application Fed. Rep. of Germany, May 6, 1980, 3017286
Int. Cl.³ B25G *3/00;* **F16D** *1/00;* **F16G** *11/00*
U.S. Cl. 403—288 **5 Claims**

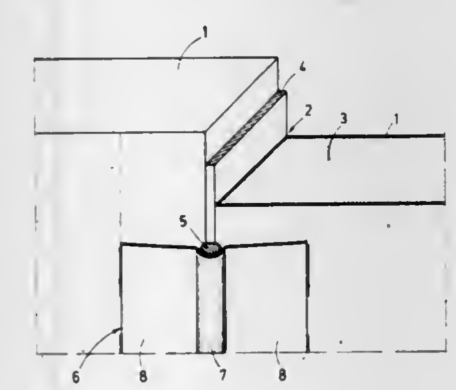

1. A protection chamber comprising a plurality of protective wall elements with a joint between them, a sealing compound in the joint, and an additional sealing compound at the joint but on the outside of the joint, and a cover strip covering the additional sealing compound.

4,371,284
BARRIER EXTENSION ADAPTER
Gildo Fermeglia, c/o George Spector, 3615 Woolworth Bldg., 233 Broadway, and George Spector, 3615 Woolworth Bldg., 233 Broadway, both of New York, N.Y. 10007
Filed Aug. 15, 1980, Ser. No. 178,506
Int. Cl.³ F16B *3/04, 21/00*
U.S. Cl. 403—301 **3 Claims**

1. A barrier extension adapter, comprising a sleeve with aligned inner and outer ends, in combination with a pivotable arm of a stanchion bolted in said inner end of said sleeve, and an adjustable barrier extension adjustably inserted in said outer end of said sleeve in further combination with spur means for securement of said extension mounted on said outer end, said spur means including a pivotable latch whereby pivotable

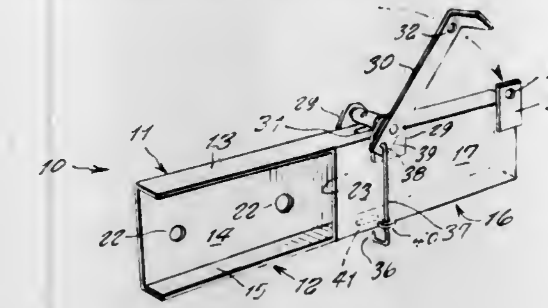

movement of said latch to a secured position drives a spur into said barrier extension.

4,371,285
CONNECTION BETWEEN TWO BODIES
Abraham Behar, P.O. Box 848, Catano, P.R. 00632
Filed Feb. 29, 1980, Ser. No. 125,900
Int. Cl.³ F16B *17/00*
U.S. Cl. 403—339 **1 Claim**

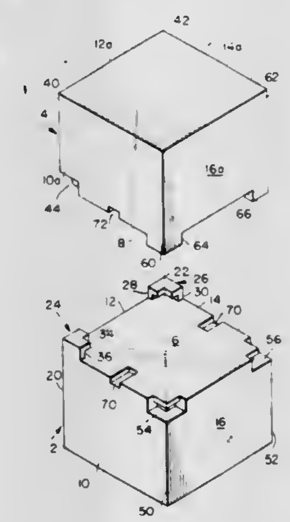

1. As a new article of manufacture, a body having a side wall and an end surface and means at and adjacent the end surface for connecting the body to a second body having the same connecting means, the connecting means comprising:
a. at least one inwardly facing hook adjacent the side wall and extending outwardly from the end surface comprising a first part having an outer surface forming an extension of the adjacent side wall and a second part overhanging the end surface and spaced therefrom and providing a recess above the end surface between the two parts, and
b. at least one outwardly facing recess formed in the side wall beneath the end surface at a location spaced from the hook and, defined by a lower surface beneath the end surface and parallel thereto, an inner wall peripendicular to the end wall, and a part overhanging the lower surface with its lower surface spaced above the lower surface of the recess and its outer edge spaced inwardly of the side wall of the body,
c. each hook and each recess having the same size and configuration.

4,371,286
TAPPING BOSS OF MAGNETIC TAPE CASSETTE
Masatoshi Okamura, and Haruo Shiba, both of Tokyo, Japan, assignors to TDK Electronics Co., Ltd., Tokyo, Japan
Filed Jul. 20, 1981, Ser. No. 285,291
Int. Cl.³ B25G *3/00;* **F16D** *2/14;* **F16B** *21/80;* **F16G** *11/00*
U.S. Cl. 403—407 **4 Claims**

1. In a tapping boss formed in one piece with the upper half casing for joining the lower half casing of a magnetic tape cassette, an improvement which comprises a stem having a cross sectional area slightly larger than the diameter of a tapping screw to receive the screw and a plurality of ribs which

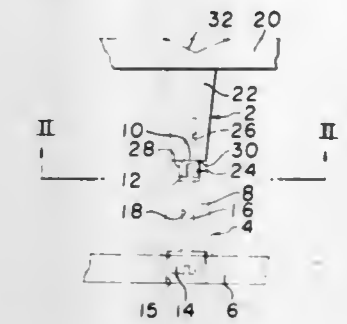

project radially from the cylindrical surface of said stem and whose top portions provide contact shoulders for the boss supporter of a lower half casing.

4,371,287
SURFACE TROWELLING DEVICE
Leif Johansson, Bäckvägen 15, Kallered, Sweden (430 50)
Filed Jun. 18, 1980, Ser. No. 160,489
Int. Cl.³ E01C *19/00*
U.S. Cl. 404—84 **8 Claims**

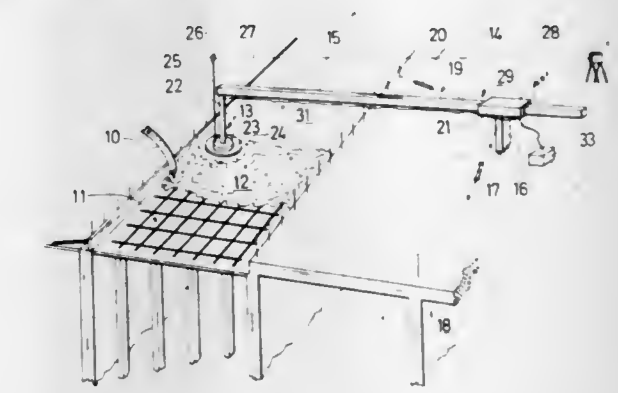

1. A device for trowelling a filling compound upon a substantially horizontal surface, such as a floor, and including an apparatus governed by a level sensing photo-detector adapted to issue a substantially horizontal beam at a predetermined height above said surface, the apparatus comprising
a carrier, mountable outside the surface and having a cantilever arm extensible over the surface,
a vertical pedestal at the distal end of said cantilever arm for carrying a trowelling means, which includes a compound distributor, as well as means for rotating the same about the pedestal,
a mechanism for adjusting said distributor vertically with respect to said pedestal
a measuring rod extending upwardly from said trowelling means, and carrying a receiver for the beam issued by said photo-detector, and
means for transferring changes in the relative position between said receiver at the measuring rod and said photodetector beam into signals governing the adjusting mechanism.

4,371,288
FLUID IMPERMEABLE LINER FOR A CAVITY IN THE EARTH
Bruno Borca, and Emilio Ruscelli, both of Milan, Italy, assignors to Industrie Pirelli S.p.A., Milan, Italy
Filed Mar. 19, 1980, Ser. No. 131,823
Claims priority, application Italy, Mar. 27, 1979, 21304 A/79
Int. Cl.³ B65G *5/00*
U.S. Cl. 405—53 **8 Claims**

1. A flexible, inextensible, fluid impervious lining member

sealing a cavity in the earth against flow of fluid relative to the cavity and the surrounding earth which comprises an enclosed hollow plastic member having a flexible, fluid impervious, inextensible wall and means attaching the said wall to the said surrounding earth comprising spaced rigid elongated cylindrical members which extend along the wall of the cavity, anchor members for anchoring the cylindrical members to the wall of

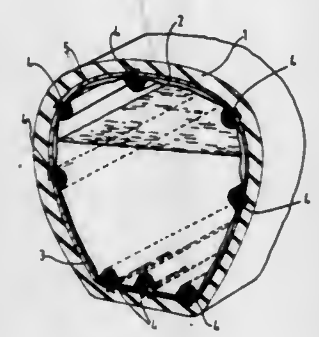

the cavity comprising a series of rigid support members fixed to the cylindrical member and having a base embedded in said surrounding earth, and a jaw member arcuate in cross-section radially movable relative to the said elongated cylindrical member for securing said wall against said elongated cylindrical member to prevent relative movement of the said wall relative to the surrounding earth.

4,371,289

UNDERGROUND ROCK CHUTES

David F. Odendaal, Johannesburg, South Africa, assignor to Gold Fields Mining and Development Limited, Johannesburg, South Africa

Filed Jun. 6, 1980, Ser. No. 157,923

Claims priority, application South Africa, Jun. 12, 1979, 79/2899

Int. Cl.³ E21D *11/00*

U.S. Cl. 405—150 **4 Claims**

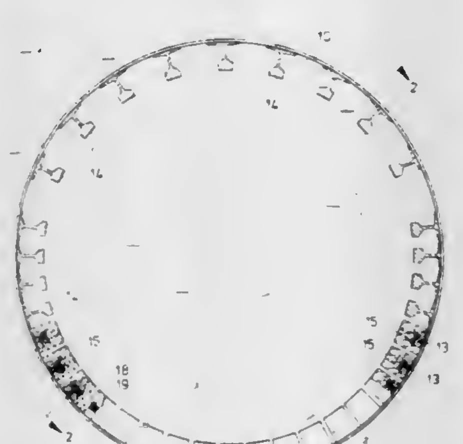

1. A cylindrical section for lining a rock pass, said cylindrical section being intended for coaxial mounting with a plurality of similar sections and having inwardly directed means for receiving and retaining liner means, liner means, said receiving and retaining means comprising fixed enlarged headed cleats extending inwardly from the cylindrical section, complementary fastener means for permitting the liner means to slide on and interlock with said cleats, in such manner that said liner means presents a substantially flush inwardly directed surface and whereby said liner means may be replaced from within the cylindrical section.

4,371,290

SHUTTERING FOR ESTABLISHING CONCRETE LINING OF TUNNELS

Valentin A. Ivanov, ulitsa Konstantinova, 4, kv. 25; Vladimir A. Khodosh, M.Pirogovskaya ulitsa, 27, korpus 1, kv. 11; Mikhail Y. Shenkman, Otkrytoe shosse, 24, korpus 5g, kv. 37; Vladimir L. Kirbatov, Planetnaya, 26, kv. 43, all of Moscow, and Iosif D. Fishman, ulitsa Mashinostroitelei, 13, kv. 20, Yasinovataya Donetskoi oblasti, all of U.S.S.R.

Filed May 7, 1980, Ser. No. 147,097

Claims priority, application U.S.S.R., May 17, 1979, 2765960

Int. Cl.³ E21D *11/00*

U.S. Cl. 405—150 **4 Claims**

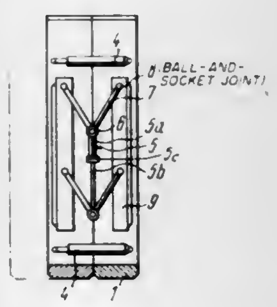

1. A shutter assembly for facilitating production of poured, concrete linings, comprising:

a plurality of shutter sections disposed in adjacent, essentially side-by-side relation, each of said shutter sections including at least a base segment and a wall segment;

hinge means for connecting said base and said wall segments in pivotal relation with respect to each other to thereby form an assembled shutter section, and preventing means connected between two adjacent shutter sections for preventing the sections from being mutually inclined in a vertical plane and for permitting relative step-by-step movement of one assembled shutter section with respect to the other along a pouring site so that the assembled shutter assembly can negotiate curves, obstacles, and the like, said preventing means comprising a vertical bar, said bar including at least two portions relatively pivotal one-with-respect-to-the-other on a common, longitudinal axis; connecting links mounted in pairs at opposed ends of the vertical bar; and

ball-and socket joints for pivotally connecting said links to the respective shutter sections so that one assembled shutter section being displaced can readily move away from an adjacent shutter section.

4,371,291

UNDERWATER FLOWLINE CONNECTOR

Charles D. Morrill, Bellaire, Tex.; John M. Des Lierres, Rolling Hills, and Louis E. Copeland, Garden Grove, both of Calif., assignors to Smith International, Inc., Newport Beach, Calif.

Continuation-in-part of Ser. No. 973,619, Dec. 27, 1978, Pat. No. 4,329,085. This application Jun. 12, 1980, Ser. No. 158,933

Int. Cl.³ E21B *43/01*

U.S. Cl. 405—169 **36 Claims**

1. An apparatus for pulling a first subsea conduit to a second subsea conduit and for aligning the first subsea conduit with the second subsea conduit, comprising:

pulling means disposed on the subsea floor for pulling the first subsea conduit to the second subsea conduit;

cable means attached to the first subsea conduit and extending to said pulling means, said pulling means being actuated into engagement with said cable means at its location on the subsea floor for applying pulling force on said cable means at such location; and

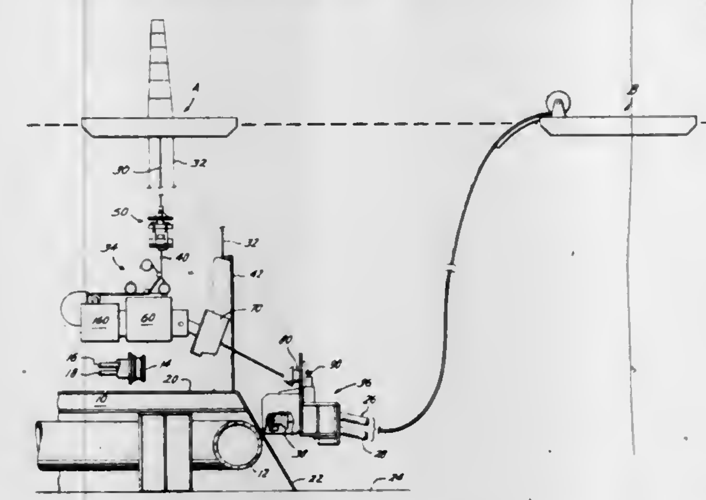

alignment means disposed adjacent to the second subsea conduit for aligning the first subsea conduit with the second subsea conduit.

4,371,292

GRAVITY STRUCTURE

Munetoshi Takahashi, and Takashi Kato, both of Tokyo, Japan, assignors to Kabushiki Kaisha Meiji Gomu Kasei, Tokyo, Japan

Filed Jun. 16, 1980, Ser. No. 159,629

Claims priority, application Japan, Jul. 2, 1979, 54-83827

Int. Cl.³ E02D *5/74;* **E02B** *3/06*

U.S. Cl. 405—224 **2 Claims**

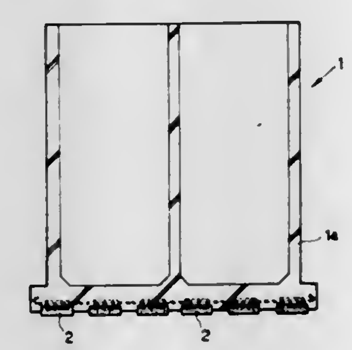

1. A concrete body gravity structure for resting bottom downwards on a surface of a foundation under water including a concrete body having a bottom surface; a plurality of unit friction members each being composed of a rubber block having a flat bottom surface and each having at least one fixing member partially embedded therein, said unit friction members being embedded intgrally in the concrete body with a portion of each member protruding from the bottom surface thereof; and a plurality of reinforcing bars embedded in said concrete body passing through said fixing members; the bottom surface of said unit friction members being caused to contact with the surface of the foundation thereby increasing the co-efficient of friction between the surface of the foundation and the bottom surface of the concrete body underwater.

4,371,293

MINE ROOF BEARING PLATE

Raymond J. Wilcox, 201 Ocean Ave., Santa Monica, Calif. 90402, and Earl W. Powers, 502 Berland Way, Chula Vista, Calif. 92011

Continuation of Ser. No. 945,490, Sep. 25, 1978, abandoned. This application Aug. 14, 1980, Ser. No. 177,854

Int. Cl.³ E21D *21/00*

U.S. Cl. 405—259 **33 Claims**

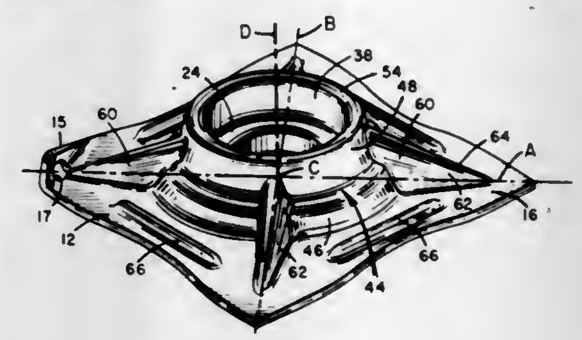

1. A bearing plate for supporting a portion of a mine roof or similar surface, said bearing plate comprising:

roof-bearing means including a substantially planar roof-bearing surface for supporting said portion of said mine roof;

bolt-head bearing means including a substantially planar, circumferential bolt-head bearing surface that terminates in a perimeter, said bolt-head bearing surface being concentric about an axis that is perpendicular to said planar roof-bearing surface, said bolt-head bearing surface having an aperture adapted to receive a roof bolt having a bolt head, said aperture being concentric about said axis;

a wall disposed completely around said perimeter of said bolt-head bearing surface and being oriented normal to said roof-bearing surface, said wall extending away from said bolt-head bearing surface to define a cylindrical portion having a distal end spaced from said bolt-head bearing surface;

means for connecting said cylindrical portion to said perimeter of said bolt-head bearing surface; and

reinforcing means connecting the distal end of said cylindrical portion with said roof-bearing means for translating a bearing force applied to said bolt-head bearing means by said bolt-head to said bearing surface for supporting said portion of said mine roof.

4,371,294

SLURRY CONVEYOR SYSTEM

Masakatsu Sakamoto, Matsudo, Japan, assignor to Hitachi, Ltd., Tokyo, Japan

Filed Feb. 6, 1981, Ser. No. 232,002

Claims priority, application Japan, Feb. 8, 1980, 55/13714

Int. Cl.³ B65G *53/30*

U.S. Cl. 406—109 **4 Claims**

1. In a slurry conveyor system using pressurized water, having a plurality of supply pipes arranged in parallel relation, valves disposed in said supply pipes, a low-pressure mixture pump adapted to charge mixture liquid into said supply pipes, and a high-pressure fresh water pump adapted to force the mixture liquid in said supply pipes into a convey pipe,

an improvement which comprises a pressure adjusting means in each supply pipe for varying the volume within the supply pipes to increase or decrease the pressure in

said supply pipes to equalize said pressure to the pressure in a pipe connected to each of said supply pipes before

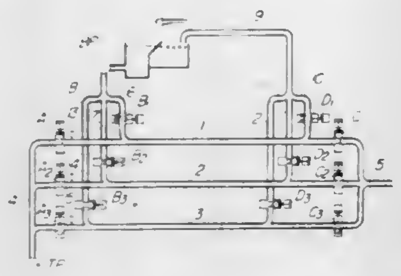

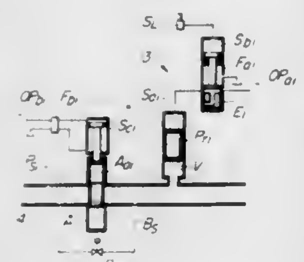

opening a valve disposed between each of said supply pipes and said pipe connected to each of said supply pipes.

4,371,295
SYSTEM FOR SPRAYING POWDER
Robert J. Hart, Tulsa, Okla., assignor to Commercial Resins Company, Tulsa, Okla.
Division of Ser. No. 177,086, Aug. 11, 1980, Pat. No. 4,308,819. This application Mar. 19, 1981, Ser. No. 245,454
The portion of the term of this patent subsequent to Jan. 5, 1999, has been disclaimed.
Int. Cl.³ B65G *53/40*
U.S. Cl. 406—128 **2 Claims**

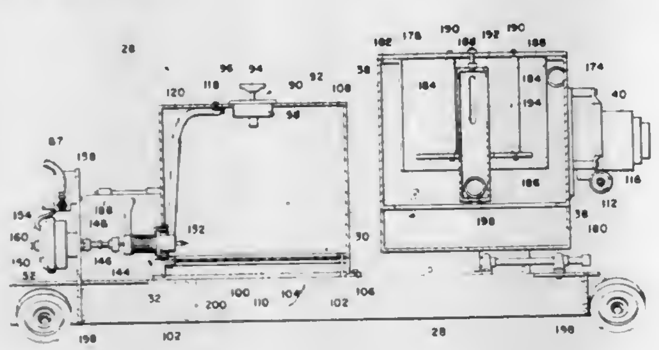

1. An improved system for spraying fluidized powder comprising a powder dispenser, a powder fluidization chamber including a hollow container adapted to contain a quantity of powder therein, means for sealing said chamber, means for introducing a stream of air into said chamber to fluidize the powder therein, a powder blower having an outlet from which a stream of air is allowed to pass, a powder control valve connected to said chamber and in communication with said fluidized powder therein, means for actuating said powder control valve wherein a quantity of fluidized powder is exhausted into an orifice in said powder control valve, means for introducing the exhausted fluidized powder from said powder control valve into the side of said outlet from said powder blower, a supply conduit connecting said outlet with a portion of said powder dispenser for supplying a stream of fluidized powder to said powder dispensing device, and a fluidization blower having its suction from the atmosphere and from which a stream of fluidizing air is allowed to pass into said chamber, said powder control valve comprising a powder valve body partially extending into said chamber, said powder valve body having a fixed valve seat internal of said chamber and being threadly received within a cylinder, said cylinder being external of said chamber and having a piston slidably received therein, a compression spring surrounding said cylinder and said piston, a cone-shaped poppet having its tapered end received into an orifice within said valve seat, and a horizontally disposed piston rod received on said poppet and extending through said powder valve body and being threadly received in said piston whereby said piston rod is adapted to extend into said chamber when the spring is compressed, thus unseating said poppet from the valve seat orifice thereby allowing a quantity of fluidized powder to be exhausted into the powder valve.

4,371,296
CUTTING TOOL FOR INTERNAL AND EXTERNAL TURNING OPERATIONS
Garri Berstein, Erkelenz, and Walter Riedel, Wegberg, both of Fed. Rep. of Germany, assignors to Wilhelm Hegenscheidt Gesellschaft mbH, Erkelenz, Fed. Rep. of Germany
Filed Oct. 10, 1980, Ser. No. 196,251
Claims priority, application Fed. Rep. of Germany, Oct. 11, 1979, 2941203
Int. Cl.³ B26D *1/00*
U.S. Cl. 407—115 **2 Claims**

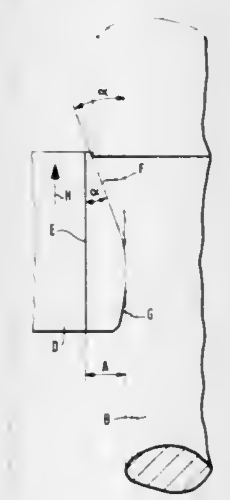

1. A cutting tool for internal and external turning operations, comprising a tool body, a substantially straight main cutting edge on said tool body, a curved auxiliary cutting edge on said tool body adjacent said main cutting edge in such position that the main cutting edge forms a tangent to the curved auxiliary cutting edge, and chip guiding shoulder means on said tool body operatively arranged to enclose an angle with said main cutting edge, said angle being within the range of 3° to 9°, and wherein said chip guiding shoulder means extend in parallel to the feed advance direction of the tool, whereby said angle within the range of 3° to 9° is also enclosed between said main cutting edge and the feed advance direction.

4,371,297
MACHINE TOOL
Noboru Hirose, Nagoya, Japan, assignor to Brother Kogyo Kabushiki Kaisha, Aichi, Japan
Filed Sep. 23, 1980, Ser. No. 190,069
Claims priority, application Japan, Oct. 3, 1979, 54-136849[U]
Int. Cl.³ B23B *45/04, 47/22;* **F15B** *5/00*
U.S. Cl. 408—130 **4 Claims**

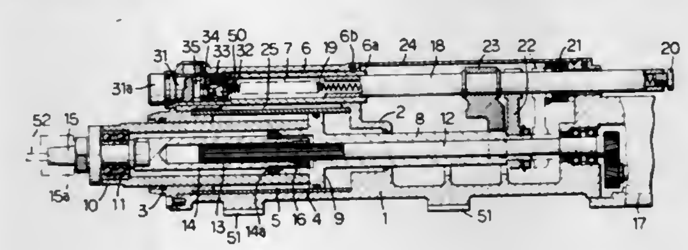

1. A machine tool having:

a machine frame adapted to be attached to a stand,
a quill reciprocably mounted on the machine frame,
a spindle rotatably mounted in the quill and carrying a tool at one end thereof,
a motor operatively connected with the spindle for rotating the same,
pneumatic feed means for reciprocating the quill in advancing and returning directions, and
feed control means for controlling the feed speed of the quill, including:
(a) an hydraulic cylinder which is disposed in parallel with the quill and provided with a housing confining a cylinder chamber therein and a piston assembly disposed within the housing having a portion projecting from one end of the housing,
(b) a liquid tank formed on the machine frame, along the axis of the spindle,
(c) means for connecting the liquid tank to the hydraulic cylinder,
(d) regulating means disposed in the connecting means for regulating flow of liquid from the hydraulic cylinder to the liquid tank and allowing free flow of the liquid from the liquid tank to the hydraulic cylinder, and
(e) engaging means for engaging the quill with the projecting portion of the piston assembly when the quill arrives at a desired position in the forward movement thereof, whereby the quill is moved at a rapid speed by the pneumatic feed means until it engages with the projecting portion and then is moved at a slow speed controlled by the regulating means,
wherein the improvement comprises;
the connecting means including two passages, each having at one end thereof a first opening associated with the liquid tank, and at the other end thereof a second opening associated with the cylinder chamber, one of the first openings of the passages being open to one axial end portion of the liquid tank, and the other of the first openings being open to the other axial end portion of said liquid tank,
selecting means for selectively communicating the cylinder chamber with one of the second openings of the passages and blocking the other of the second openings, whereby the selection of either one of the two second openings causes the liquid tank to be communicated with the cylinder chamber via one of the first openings corresponding to the selected second opening, thereby enabling the machine tool to be used in any posture with at least one of the first openings maintained below the surface of liquid in the tank.

4,371,298
VEHICLE SUPPORTING RAMPS FOR CARGO CONTAINERS
Willem H. P. Van Iperen, Westfield, N.J., assignor to Sea-Land Industries, Inc., Elizabeth, N.J.
Filed Apr. 6, 1981, Ser. No. 251,314
Int. Cl.³ B60P *3/007, 7/008;* **B32B** *1/000*
U.S. Cl. 410—25 **4 Claims**

1. A knockdown disposable vehicle supporting ramp for mounting on the floor of a container for elevating the rear end of a vehicle having wheels thereon for nesting in-line with another similarly elevated vehicle comprising; a ramp assembly having a U-shaped cross-sectional configuration, said ramp assembly having vertical side and rear walls connected to each other, said side walls each having an inclined ramp section and a wheel positioning section, said ramp section having downwardly inclined edges in said side walls extending from said wheel positioning section to the container floor, said ramp assembly being constructed of corrugated fiberboard having load-supporting vertically-extending corrugations, a longitudinally-extending wheel guide ramp and wheel well mounted on said ramp assembly, said wheel guide ramp being supported on said inclined edges of said ramp section and said wheel well being positioned in said wheel positioning section, reinforcing ramp supporting means mounted between said side walls for supporting a load on said wheel guide ramp, said wheel guide ramp having a lower end and an upper end, means securing said lower end of said wheel guide ramp to the container floor, means for retaining said upper end in said wheel positioning section for receiving and supporting a vehicle wheel on said wheel well, a four-sided liner cooperatively receivable in said wheel positioning section for supporting a load including rein-

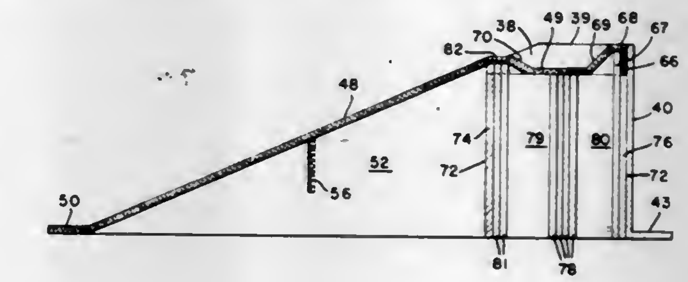

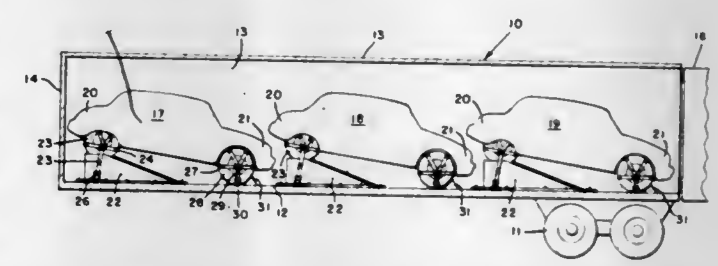

forced cardboard having vertically extending corrugations, a back stop corrugated fiberboard member having vertical corrugations spaced from said rear wall in said wheel positioning section forming an opening for cooperatively receiving therein a portion of said wheel well, and a plurality of spaced reinforced plies of corrugated fiberboard having vertically-extending corrugations for supporting a load within said four-sided liner to which the wheel well is subjected.

4,371,299
TRAILER FRAME
Darryl F. Cain, East Moline, Ill., and Kevin L. Ehrecke, Blue Grass, Iowa, assignors to Deere & Company, Moline, Ill.
Filed Jul. 24, 1980, Ser. No. 171,858
Int. Cl.³ B60P *3/00, 7/08;* **B61D** *3/16, 45/00*
U.S. Cl. 410—44 **16 Claims**

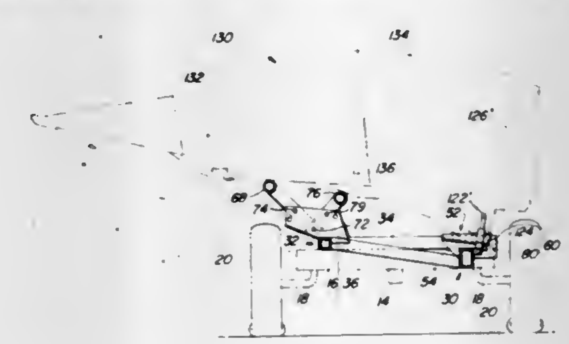

1. A towable transporter for endwise transport of a laterally elongated harvesting header having at least two rearward downwardly facing spaced-apart support surfaces comprising:
a towable undercarriage having at least two wheels for supporting the undercarriage above the ground and including spaced-apart front and rear generally laterally and horizontally extending bolsters;
an elongated longitudinally extending frame spanning the bolsters and supported by them and having opposite first and second lateral sides extending generally longitudinally of the undercarriage;
first header support means, having first localized fixed support surfaces carried by the frame adjacent the first lateral side;

an elongated longitudinally extending movable header support member providing longitudinally extending and aligned support surfaces and fixed pivot means for connecting the member to the frame adjacent the second lateral side so that the support surfaces are shiftable in a range of laterally spaced positions, said range overlying the pivot means and each position providing, in cooperation with the first support means, a particular combination of support surfaces for receiving and stably supporting a particular header; and

means for positioning and retaining the frame on the bolsters.

12. An adapter arrangement, for use in cooperation with a wagon running gear having spaced-apart front and rear bolsters, for supporting and transporting a harvesting header having spaced-apart front and rear undersurfaces comprising:

a main frame having laterally spaced and laterally interconnected first and second longitudinal members, for spanning and being supported by the bolsters;

means for releasably securing the main frame to the bolsters;

a plurality of fixed spaced support members for engaging the rear undersurfaces of the header, carried by the frame adjacent the first longitudinal member;

a sub-frame having support surfaces and fixed pivot means for connecting the sub-frame to the main frame so that the support surfaces are laterally displaceable so as to provide a plurality of positions of the support surfaces for engaging forward undersurfaces of a header; and

means for retaining the sub-frame in a predetermined position relative to the main frame for selectively engaging a particular portion of the forward undersurfaces of a particular header.

4,371,300
INSERT
Stanley A. Ringham, Ilford, England, assignor to Adbar (Patent Co.) Limited, Warwickshire, England
Filed Jan. 23, 1981, Ser. No. 227,928
Claims priority, application United Kingdom, Jan. 26, 1980, 8002720
Int. Cl.³ F16B *13/06*
U.S. Cl. 411—41 **10 Claims**

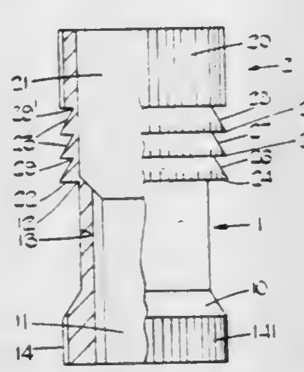

1. An insert of the character described for installation in a hole therefor in parent material comprising a round section body member of which at least part of the exterior of said body member has an increase in diameter between larger and smaller diameter ends thereof, said body member being such as to end locate by its larger diameter end in a hole therefor in parent material; and a tubular ferrule adapted to be axially driven about the exterior of the body member when the latter is end located by its larger diameter end in a said hole therefor, the exterior of the ferrule being annularly grooved to provide at least one forwardly directed portion from said groove at the leading end of the ferrule and having a thin section connection therewith at the annular groove whereby on the ferrule being axially driven about the exterior of the body member and co-acting with the latter at the increase in exterior diameter thereof, the forwardly directed portion effects a radial expanding action of the ferrule into taper engagement with the wall of a said hole receiving the insert in order to lock the ferrule and body member in the hole with a taper locking action against axial pullout of the insert from the hole.

4,371,301
MODIFIED SPIRAL WOUND RETAINING RING
Ashby G. Lawson, Tabb, Va., assignor to The United States of America as represented by the Administrator of the National Aeronautics and Space Administration, Washington, D.C.
Filed Aug. 29, 1980, Ser. No. 182,880
Int. Cl.³ F16B *21/18*
U.S. Cl. 411—517 **5 Claims**

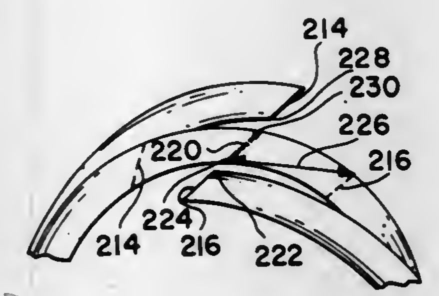

1. A spiral wound retaining ring comprising:

a spiral wound ring;

said ring having ends thereof angled within a plane parallel to the upper and lower surfaces of the ring with respect to a radial line emerging from the center of said ring, both of said ends being angled to the same degree and in the same direction; and

said ring having a crimp oriented on the ring between said angled ends.

4,371,302
PIPE HANDLING APPARATUS
Robert Frias, Odessa; C. W. Minnis, Fort Worth; A. Hubert Hawkins, Fort Worth, and Wendell Davis, Fort Worth, all of Tex., assignors to Ingram Corporation, New Orleans, La.
Filed Sep. 30, 1980, Ser. No. 192,495
Int. Cl.³ E21B *19/14*
U.S. Cl. 414—22 **8 Claims**

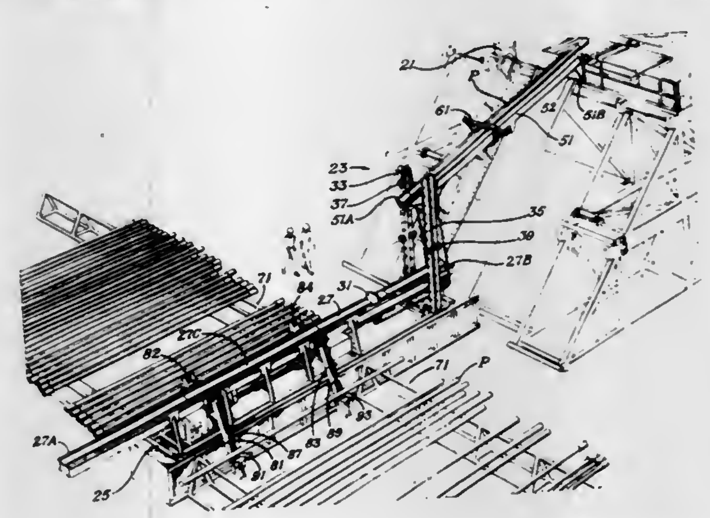

1. An apparatus for transferring pipe or the like to and from the floor of a drilling rig comprising:

an elongated support frame adapted to be located below the level of the floor of the rig with one end extending toward the rig and located relatively close to the rig,

an elongated stationary trough means supported by said support frame for receiving and supporting pipe,

said stationary trough means having a first end and an opposite second end,

said second end of said stationary trough means being located relatively close to the rig,

a support means located at said second end of said stationary trough means,

a movable trough means for receiving and supporting pipe, said movable trough means being aligned with said stationary trough means and having a first end coupled to said support means for generally vertical movement between a lower position and an upper position,

said lower position being next to and above said second end of said stationary trough means and said upper position being at a level above and spaced from said second end of said stationary trough means,

the opposite end of said movable trough means being adapted to be supported by structure at the floor of the rig,

a movable means supported for movement along the length of said elongated stationary trough means for moving pipe lengthwise along said elongated stationary trough means to its second end and up onto said movable trough means when said first end of said movable trough means is in said lower position for facilitating transfer to the floor of the rig and for allowing pipe to slide down said movable through means onto said stationary trough means when said movable trough means is in said lower position,

a first end moving means operatively connected to said first end of said movable trough means for moving said first end between said lower and upper positions, and

a clamping means for clamping pipe to said movable trough means as said first end moving means moves said first end between said lower and upper positions, said clamping means allowing pipe to be moved between said movable trough means and said drilling rig floor when said first end is in said upper position and between said movable trough means and said stationary trough means when said first end is in said lower position.

4,371,303
RAILWAY CAR FABRICATION FACILITY
Eldred N. Fritzsche, Kirkwood; Edgar F. Josephson, St. Charles, both of Mo., and Frank C. Pulcrano, Huntington, W. Va., assignors to ACF Industries, Incorporated, New York, N.Y.
Filed Dec. 19, 1980, Ser. No. 218,147
Int. Cl.³ F65G *63/02*
U.S. Cl. 414—281 **12 Claims**

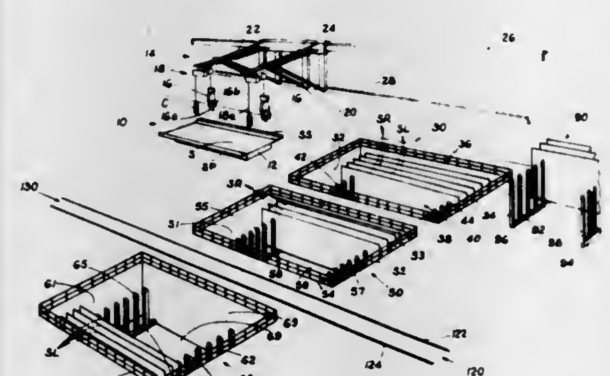

1. A railway car fabrication facility for transporting railway car sides within the facility to a railway car assembly position so that the sides can be assembled into rail cars without necessitating rotation of the railway car sides during transportation to the car assembly position comprising: means for supporting right hand and left hand railway car sides having a bulbous portion and a flat portion in an above ground side assembly position; a below ground transfer area spaced from said side assembly position along a first path; a first below ground storage area for right hand sides spaced from said transfer area along a second path extending laterally from said first path; a second below ground storage area for left hand sides spaced from said first below ground storage area; first longitudinally movable crane means, movable along said first path, for picking up the sides from said side assembly position and placing them into said below ground transfer area; second laterally movable crane means movable along said second path for picking up at least the left hand sides from said below ground transfer area and placing them in said second below ground storage area located on an opposite side of a car assembly position wherein the sides are placed in operative position in a railcar.

4,371,304
REFUSE COMPACTION APPARATUS AND METHOD
Fred T. Smith, Palos Verdes Peninsula, Calif., assignor to Sargent Industries, Inc., Los Angeles, Calif.
Division of Ser. No. 876,644, Mar. 10, 1978, abandoned. This application Feb. 23, 1981, Ser. No. 237,362
Int. Cl.³ B65F *3/20*
U.S. Cl. 414—293 **61 Claims**

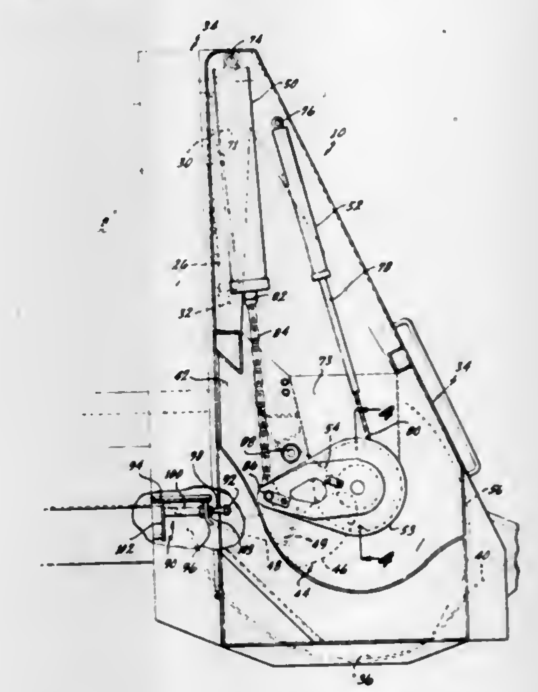

1. A refuse compacting apparatus comprising:

a container for storing refuse under pressure,

a loading hopper in communication with said storage container,

refuse compacting means positioned to sweep through said hopper to compact refuse therein and to move compacted refuse from the loading hopper into the storage container,

a passage leading from said hopper into said container,

said passage having an enlarged opening into said hopper and an enlarged opening into said container, and

said passage having a narrowed throat positioned intermediate the enlarged openings into said hopper and said container,

said passage being progressively constricted from said enlarged opening into said hopper to the narrowed throat and being enlarged from the narrowed throat to said enlarged opening into said container,

whereby refuse moved from the loading hopper into the storage container through said passage by the action of the refuse compacting means is squeezed and subjected to high localized pressures within said throat as the refuse passes through said narrowed throat and whereby the pressure is released as the refuse moves past the throat to the enlarged opening in the container.

4,371,305
MATERIAL HANDLING APPARATUS
Robert T. Pannell, Crest Line Rd., Kennett Square, Pa. 19348
Filed Feb. 21, 1978, Ser. No. 879,903
Int. Cl.³ A01G *1/04;* **B65G** *3/20, 15/28*
U.S. Cl. 414—300 **19 Claims**

11. In an apparatus for deposiging particulate material for mushroom growing wherein the particulate material is to be

deposited at a uniform depth upon the surface of an elongated bed, the apparatus including a distributor box mounted near one end of the surface, the distributor box having an elongated discharge opening disposed toward the surface and of a length generally corresponding to the width of the surface, means for feeding the particulate material into the distributor box, a belt mounted at one end to a supply roller and anchored at its other end near the one end of the surface with a portion of the belt rolled around the supply roller, the belt passing through the lower portion of the distributor box and emerging from the distributor box through the discharge opening, means for unwinding the belt from the supply roller and moving it toward the other end of the surface for passing the belt over the surface and with the belt having a movable reversal point as it is moved over the surface and means for rewinding the belt on the supply roller with the movable reversal point thereby moving back toward the one end of the surface whereby particulate material fed into the distributor box is deposited on the belt and carried by the belt toward the other end of the surface as the belt reversal point moves toward the

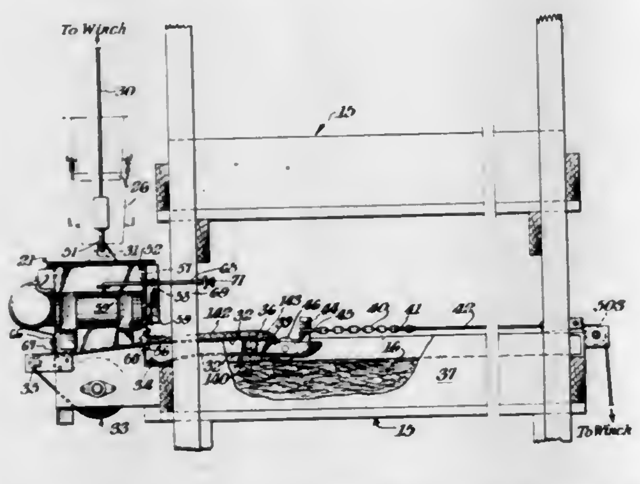

other end of the surface and the particulate material is then deposited on the surface as the belt reversal point moves toward the other end of the surface, the improvement being said belt forming the bottom of said distributor box at said discharge opening, fixed support means for said belt within said distributor box upstream from said discharge opening, fixed support means for said belt outside of said box downstream from said discharge opening, said belt being unsupported at said discharge opening between said upstream and downstream support means to provide sufficient downward clearance for the downward movement of said belt whereby stones or the like may be discharged through said discharge opening by forcing said belt downward until the portion of said belt supporting the stone or the like is moved away from said discharge opening, and said upstream and downstream support means maintaining said belt tensioned to maintain said belt generally horizontal under the weight of said particulate material to permit only the desired amount of particulate material to pass through said discharge opening while permitting said belt to move downward when a stone or the like passes through said discharge opening.

4,371,306

REFUSE EJECTION APPARATUS

Fred T. Smith, Palos Verdes Peninsula, Calif., assignor to Sargent Industries, Inc., Century City, Calif.

Division of Ser. No. 876,644, Feb. 10, 1978, abandoned. This application Feb. 23, 1981, Ser. No. 237,441

Int. Cl.³ B65F *3/28*

U.S. Cl. 414—325 **21 Claims**

5. In a refuse compaction apparatus having a container for storing refuse under pressure and means for pressurizing refuse within said container, the improvement comprising:

a first rigid frame positioned at one end of said container,

a second rigid frame positioned at the other end of said container,

a plurality of longitudinal rigid members connecting said first and second frames,

a plurality of flexible metal sheet members enclosing the container with the sheet members supported by said first and second frames and said longitudinal rigid members,

said flexible sheet members being bowed outwardly at their points of support,

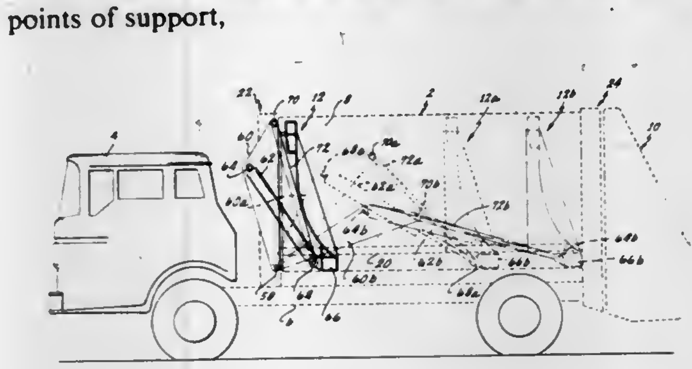

whereby the sheet members are in tension in resisting pressure within said container,

an ejection panel slidably positioned within said container,

the longitudinal rigid members including members extending between the first and second frames adjacent to said base to form slide rails, and

said ejection panel slidingly engaging said slide rails.

4,371,307

HYDRAULIC BUCKET CLEANER

Melvin J. Mattson, 107 W. Johnson Ave., Warren, Minn. 56762

Filed Dec. 10, 1980, Ser. No. 214,820

Int. Cl.³ B66F *9/00*

U.S. Cl. 414—725 **22 Claims**

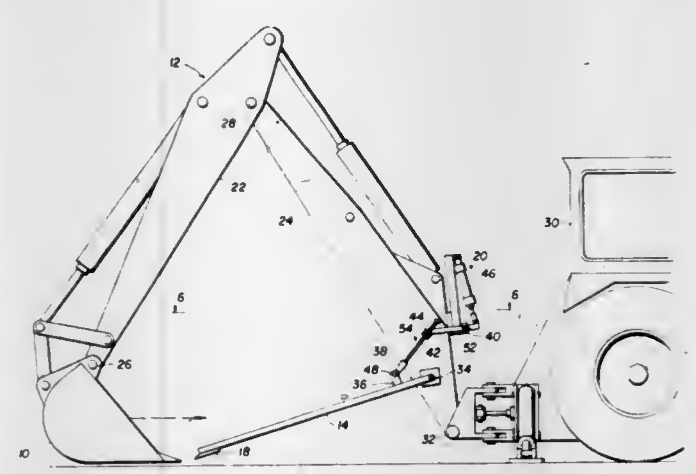

1. Apparatus for cleaning the interior of a digging bucket pivotally mounted on an articulated boom comprising:

(a) a first segment having a first end on which said bucket is pivotally mounted and a second end remote from said first end and

(b) a second segment having a first end pivotally connected to said first segment at its second end and a second end remote from said first end,

said apparatus comprising:

(c) a first strut having a first end adapted to be pivotally mounted on said second segment of said articulated boom at a point intermediate its first and second ends and a second end remote from said first end;

(d) a scraper mounted on said first strut at its second end; and

(e) first means for selectively pivoting said first strut relative to said articulated boom independently of the motion of said first segment from a carry position in which said first strut is adjacent to said second segment of said articulated boom to a work position in which it is swung away from said second segment and for pivoting said scraper in an arcuate motion to effect cleaning of said bucket.

4,371,308

ARRANGEMENT IN A CABLE WINDING MACHINE

Öystein Skalleberg, Järfälla, Sweden, assignor to Skaltek AB, Kungsangen, Sweden

PCT No. PCT/SE80/00031, § 371 Date Oct. 9, 1980, § 102(e) Date Oct. 9, 1980, PCT Pub. No. WO80/01682, PCT Pub. Date Aug. 21, 1980

PCT Filed Feb. 1, 1980, Ser. No. 198,141

Claims priority, application Sweden, Feb. 9, 1979, 7901173

Int. Cl.³ B66F *9/00*

U.S. Cl. 414—416 **4 Claims**

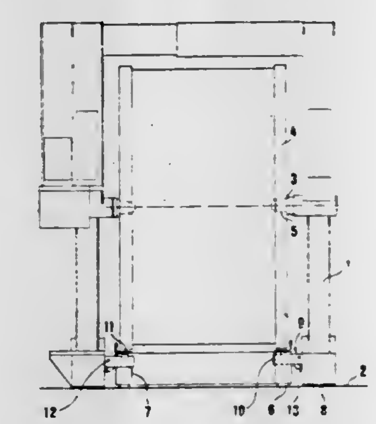

1. An apparatus for use with a cable winding machine for supporting a cable reel and a pallet for the cable reel, said machine comprising:

two vertical support members;

an extensible cross bar interconnecting said support members so that the support members are relatively movable with respect to each other between a support position and a release position;

a spindle supported by and vertically displaceable along each of said support members, the spindles cooperating with each other to carry a cable reel when the support members are in the support position; and

lifting means for carrying a pallet, said lifting means being carried by a lower portion of one of said support members and projecting toward the other of said support members, said lifting means being resiliently suspended from said one of said support members and being movable between a lower position when loaded with a pallet and reel and an upper position when loaded with a pallet only so that the pallet is lifted when the reel is removed from the pallet by vertical displacement of said spindles.

4,371,309

AIR TABLE

William L. Principe, 2594 Weigelia Rd., NE., Atlanta, Ga. 30345, and Jacky L. Fowler, 1991 N. Oak Dr., Lawrenceville, Ga. 30245

Filed Feb. 25, 1981, Ser. No. 237,929

Int. Cl.³ B65G *35/00, 51/02*

U.S. Cl. 414—676 **3 Claims**

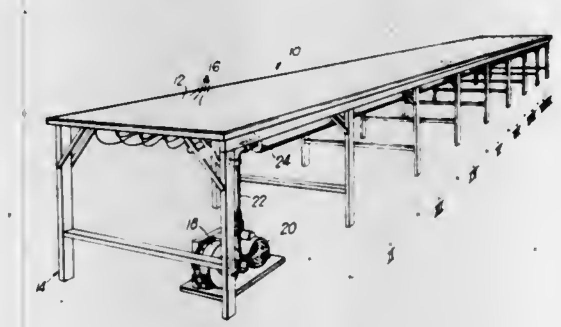

1. An improvement in an air table of the type having an article support surface with a plurality of openings therethrough, said surface comprising a plurality of juxtaposed sections along its length, a longitudinally extending air manifold, a source of pressurized air connected to said manifold and an air pipe for each section which laterally extends from said manifold beneath said surface and is in communication with the openings of the respective section, the improvement comprising:

(a) valve means on each of said air pipes operable between open and closed positions to selectively deliver air from said mainfold through said air pipe to said openings; and

(b) means on each of said sections and connected to said valve means thereon for selectively and independently actuating each of said valve means between said open and closed positions, said actuating means being responsive to an article on the respective section so as to maintain said article above said support surface while in transit between said sections, said air pipe including a longitudinally extending passageway defining a path of travel for said pressurized air and wherein said valve means is disposed in said passageway, said valve means being a pinch valve comprising a valve sleeve co-axially positioned in said air pipe and defining a chamber which is in flow communication with said passageway, a diaphragm secured within said chamber, an inlet on said sleeve in communication with said chamber, a source of fluid and a fluid line connecting said fluid source with said inlet whereby said diaphragm is selectively moved between an open position for air flow between said passageway and said chamber and thence to said openings and a constricted position to prevent said air flow, said actuating means including a means of sensing said article on said section and a fluid valve on said fluid line operable between open and closed position, said sensing means being connected to said fluid valve so that when said sensing means is actuated by said article, said fluid valve is moved to said closed position, thereby restricting the flow of fluid between said fluid source and said inlet to cause said diaphragm to move to said open position, and wherein said fluid valve is a slide valve having a valve housing defining a slide chamber, said housing having an intake opening in communication with said source of fluid and an outlet opening in communication with said inlet, a piston spring-biased within said chamber and having a passageway therethrough, said piston being movable from a first, normal position wherein the opposed ends of said passageway are in respective registration with said intake opening and said outlet opening and a second position wherein said opposed ends are out of said registration, and sensing means being connected to said position.

4,371,310

CENTRIFUGAL PUMP RECIRCULATION DIFFUSER

John W. Henry, IV, and David E. Cassel, both of Annapolis, Md., assignors to The United States of America as represented by the Secretary of the Navy, Washington, D.C.

Filed Jul. 23, 1974, Ser. No. 492,300

Int. Cl.³ F04D *29/66*

U.S. Cl. 415—211 **4 Claims**

1. A centrifugal pump for liquids having a casing with a vaned impeller rotatably mounted therein and a diffuser section at the periphery thereof comprising:

a pair of facing shroud members forming the diffuser section of the casing;

a plurality of hydrodynamically shaped diffuser vanes attached to at least one of said shrouds; and

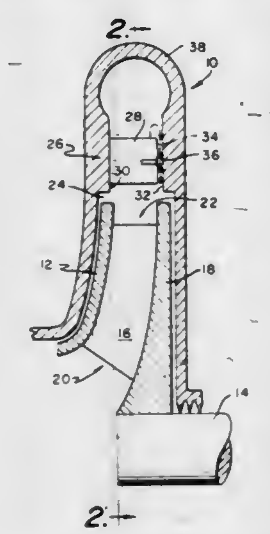

a recirculation flow path around said diffuser vanes from the outside high pressure side to the inside low pressure side of said diffuser vanes.

4,371,311
COMPRESSION SECTION FOR AN AXIAL FLOW ROTARY MACHINE
Thomas C. Walsh, New Britain, Conn., assignor to United Technologies Corporation, Hartford, Conn.
Filed Apr. 28, 1980, Ser. No. 144,714
Int. Cl.³ F01D *9/00*
U.S. Cl. 415—182 **7 Claims**

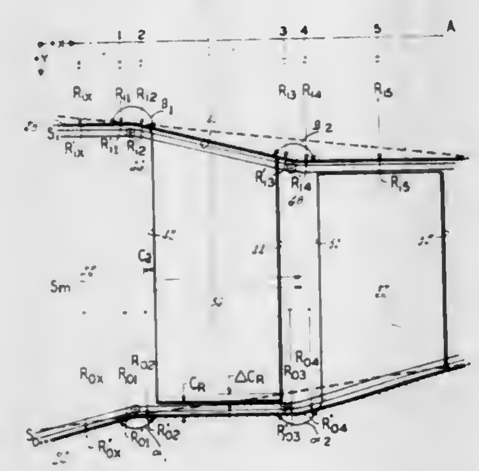

1. A compression section of an axial flow rotary machine of the type having an annular flow path for working medium gases disposed about an engine axis, the working medium gases having streamlines which have in the radial direction a first curvature having a positive mathematical sign with respect to the axis of the engine and a second curvature having a negative mathematical sign with respect to the axis of the engine which comprises:

an outer wall circumscribing the annular flow path, the outer wall having a first geometric contour for causing the streamlines of the flow path adjacent the outer wall to have a curvature in the radial direction having a first mathematical sign with respect to the axis of the engine and having a second geometric contour axially spaced from the first contour of the outer wall for causing the streamlines of the flow path adjacent the outer wall to have a curvature in the radial direction having a second mathematical sign with respect to the axis of the engine;

an inner wall spaced inwardly from the outer wall and bounding the flow path, the inner wall having a first geometric contour for causing the streamlines of the flow path adjacent the inner wall to have a curvature in the radial direction having said first mathematical sign with respect to the axis of the engine and having a second geometric contour axially spaced from the first contour of the inner wall for causing the streamlines of the flow path adjacent the inner wall to have a curvature in the radial direction having said second mathematical sign with respect to the axis of the engine;

at least one array of rotor blades extending outwardly from the inner wall into proximity with the outer wall and including a plurality of airfoils, each airfoil having a spanwise axis, a first edge region extending spanwisely and a second edge region extending spanwisely;

wherein the first geometric contour of the outer wall and the first geometric contour of the inner wall are in the first edge region of each airfoil and wherein the second geometric contour of the inner wall and the second geometric contour of the outer wall are in the second edge region of the airfoil.

4,371,312
BUCKET FOR AN ADJUSTABLE TURBINE INLET GUIDE BAFFLE SYSTEM
Eggert Tank, Wernau, Fed. Rep. of Germany, assignor to Daimler-Benz Aktiengesellschaft, Stuttgart, Fed. Rep. of Germany
Filed Mar. 30, 1981, Ser. No. 248,829
Claims priority, application Fed. Rep. of Germany, Apr. 3, 1980, 3013076
Int. Cl.³ F01D *1/02;* **B05D** *1/00*
U.S. Cl. 415—200 **13 Claims**

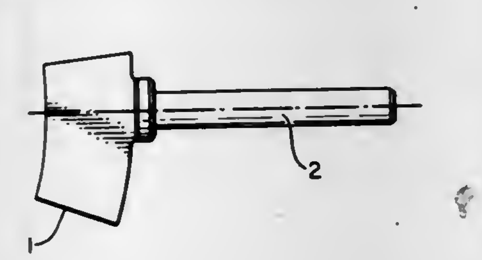

1. A bucket for an adjustable turbine guide baffle system for gas turbines said bucket having a shank which is coated with a layer of slip-providing material by plasma spraying particles of the slip-providing material onto said shank, said particles of slip-providing material consisting essentially of 90–100% by weight of nickel oxide and 0–10% by weight of one or more oxides of chromium, aluminum, zirconium, titanium, iron, manganese, or magnesium.

4,371,313
MINIATURE DIAGONAL BLOWER WITH AXIAL FLOW INLET AND RADIAL FLOW OUTLET
Martin Burgbacher; Siegfried Harmsen, and Georg Papst, all of St. Georgen, Fed. Rep. of Germany, assignors to Papst-Motoren K.G., St. Georgen, Fed. Rep. of Germany
Filed Nov. 8, 1979, Ser. No. 92,506
Claims priority, application Switzerland, Nov. 8, 1978, 11471/78
Int. Cl.³ F04D *29/42*
U.S. Cl. 415—215 **14 Claims**

1. A miniature diagonal blower with axial inward flow and radial outward flow comprising a drive motor having a shaft stub and a motor housing, said shaft stub being rotatable about a fan axis, a fanwheel including a hub fitted with fan blades, said hub being mounted on the shaft stub of the drive motor for rotation about said fan axis, a fanwheel housing surrounding the fanwheel without contacting said fanwheel and being provided with recesses for the inward flow and outward flow, a flanged surface means associated with the motor housing, said flanged surface means projecting on the outward flow side beyond the fanwheel and being located such that said hub extends axially almost up to said flanged surface means, said fanwheel housing being provided with support legs distributed about the circumference of the fanwheel in the vicinity of the outward flow, said legs delimiting recesses located between them for the outward flow and being mounted by their soles on said flanged surface means associated with the motor housing

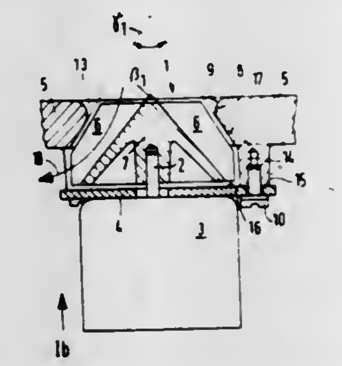

with fastening means, and wherein said fanwheel housing and said motor housing are configured such that said blower has a square cross section in the direction perpendicular to the fan axis and a rectangular cross section along the fan axis.

4,371,314
AIR JET HELICOPTER ROTOR HUB AND AIR DISTRIBUTION SYSTEM
Darold R. Dauel, Pleasonton; Clarence R. Kiesling, Grand Island, and Jerry L. May, Kearney, all of Nebr., assignors to Henderson & Sturm, Omaha, Nebr.
Filed Apr. 6, 1981, Ser. No. 251,608
Int. Cl.³ B64C *27/18*
U.S. Cl. 416—20 A **14 Claims**

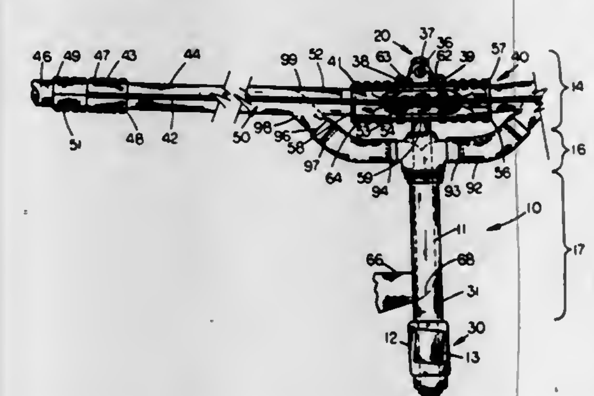

1. In an air jet helicopter, having a fuselage, a compressed air source, hollow rotor blades, a rotor hub, pitch control systems, and tension straps, a rotor hub assembly and air distribution system comprising:

a thrust bearing means secured to the fuselage for supporting a rotatable mast shaft in a somewhat vertical orientation, said mast shaft having a lower protruding segment, an upper protruding segment and an exposed segment, and for resisting vertical forces acting upon said mast shaft;

a stationary plenum means attached to the fuselage and surrounding the lower protruding segment of the mast shaft for receiving compressed air from the compressed air source and for the transportation thereof to the hollow rotor blades;

mast shaft air seal means for preventing air pressure loss from the adjoinment of the rotatable mast shaft and the stationary plenum means;

a rotatable plenum means secured to and surrounding the upper protruding segment of the mast shaft for receiving compressed air from the stationary plenum means and for transportation thereof to the hollow rotor blades;

rotatable plenum air seal means for preventing air pressure loss from the adjoinment of the stationary plenum means and the rotatable plenum means;

two flexible duct means each attached at a first end to the rotatable plenum means and at a second end to a hollow rotor blade for transporting compressed air from the rotatable plenum means to the hollow rotor blades and for allowing the hollow rotor blades to tilt and rock with respect to the mast shaft; and

a teetering hinge means connecting the exposed segment of the mast shaft to the rotor hub for allowing the rotor hub to tilt with respect to the mast shaft and for minimizing the load of the tension straps on the pitch control systems.

4,371,315
PRESSURE BOOSTER SYSTEM WITH LOW-FLOW SHUT-DOWN CONTROL
Satoru Shikasho, Chicago, Ill., assignor to International Telephone and Telegraph Corporation, New York, N.Y.
Filed Sep. 2, 1980, Ser. No. 183,461
Int. Cl.³ F04B *49/00, 49/02*
U.S. Cl. 417—5 **13 Claims**

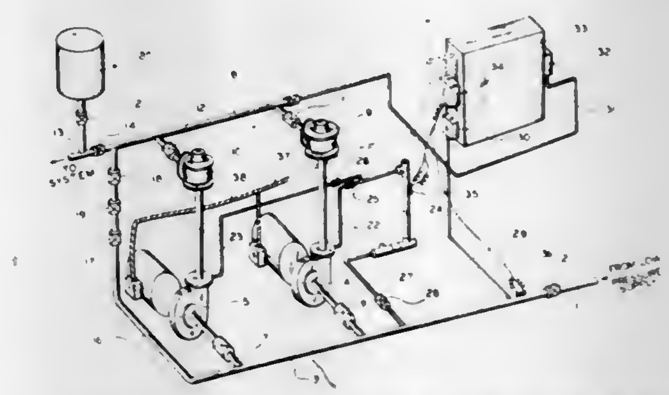

1. A water pressure booster system comprising: a suction header in fluid communication with a source of water;

a discharge header in fluid communication with a fluid distribution system;

a least one pressure booster pump having a suction inlet coupled to said suction header and a discharge outlet coupled to said discharge header;

control means for energizing and deenergizing said pump;

said control means comprising a temperature header coupled between said pump discharge outlet and said suction header, first means for sensing the fluid temperature in said temperature header, second means for sensing the temperature of fluid supplied to said suction header, differential temperature control means for generating a first control signal when the temperature differential between said first and second sensing means is a predetermined level, and means responsive to said first signal for de-energizing said pump.

4,371,316
CONTROL FOR A BILGE PUMP
Michael Ivic, P.O. Box 262, Seabrook, Tex. 77586
Filed Mar. 23, 1981, Ser. No. 246,652
Int. Cl.³ F04B *49/04*
U.S. Cl. 417—41 **3 Claims**

1. A control for selectively operating a bilge pump for a boat comprising a float operatively disposed in a bilge area of a boat so as to partake of ascending and descending movements in response to changes in the level of the volume of water existing in said bilge area, an electrically energized motor-operated bilge pump having an electrical circuit with a normally open pair of contacts, a ball of electrically conductive construction material having a first operative position in supported relation atop of said float incident to said ball being carried to an elevated discharge station in response to ascending movement in said float occasioned by an increase in the volume of water in said bilge area, a passage means connected to cause movement of said ball from said discharge station to a second operative position in spanning relation across said normally open contacts so as to initiate pumping operation of said bilge pump and descending movement in said float, and an upstanding extension on said float having a surface in position-holding contact with said ball during said descent of said float,

whereby said bilge pump is maintained in pumping operation for the duration of said contact between said surface and said

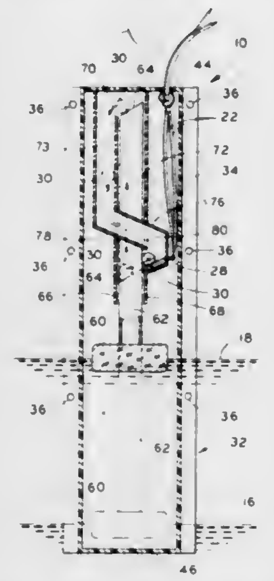

ball after which there is ball movement from said second to said first operative position thereof terminating operation of said pump.

4,371,317
HYDRAULIC SYSTEMS

Helmut Heibel, Moschheim, Fed. Rep. of Germany, assignor to Lucas Industries Limited, Birmingham, England
Filed Feb. 9, 1981, Ser. No. 232,687
Claims priority, application United Kingdom, Feb. 16, 1980, 8005303
Int. Cl.³ F04B *49/08*
U.S. Cl. 417—298 6 Claims

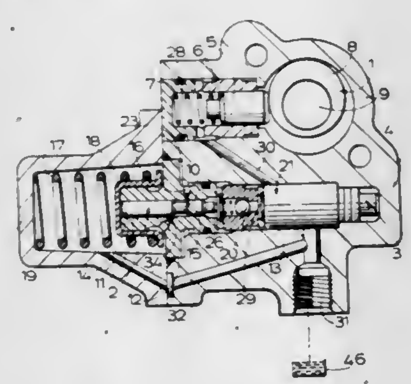

1. An hydraulic system comprising a tank for hydraulic fluid, an hydraulic accumulator, an hydraulic pump for drawing fluid from said tank and having an output to supply fluid under pressure to charge said accumulator, and an unloader valve disposed in a supply line between said pump and said accumulator and which is operative to prevent said accumulator from being overcharged and to allow said pump to recharge said accumulator should the pressure stored therein fall below a desired minimum value, said unloader valve comprising a housing incorporating an inlet for connection to said pump, an exhaust port for connection to said tank, a control valve, a pressure responsive slave which is operated by fluid pressure under the control of said control valve, a first one-way valve having an inlet, a second valve connected between said inlet of said first one-way valve and said exhaust port and having a valve member, and a complementary seating with which said valve member is engageable, and means defining a control chamber, said control valve comprising a control valve member movable between a first position in which said accumulator is isolated from said slave so that pump pressure can be supplied to said accumulator and a second position in which fluid pressure from said accumulator or said pump can act on said slave to render said slave operative to unload said pump, and spring means for biassing said control valve member into said first position against the control pressure present in said control chamber into which fluid is adapted to be pumped through said first one-way valve, said slave being arranged to open said second valve at a cut-out point so that said output of said pump is returned directly to said tank, and said slave comprising a piston assembly comprising inner and outer concentric piston parts which are relatively movable axially and of which said inner part is engageable with said valve member of said second valve to urge said valve member away from said seating at said cut-out point and said outer piston part is engageable with said inner piston part in a direction to open said second valve, in combination with a stop for arresting movement of said outer piston part in a direction towards said second valve after said valve member has been moved away from said seating, whereafter said inner piston part is movable relative to said outer piston part to urge said valve member further away from said seating.

4,371,318
HYDRAULIC FLUID POWER SYSTEM

James A. Kime, 3360 Parkway Center, Columbus, Ohio 43026
Continuation-in-part of Ser. No. 952,299, Oct. 18, 1978, abandoned. This application May 16, 1980, Ser. No. 150,563
Int. Cl.³ F04R *49/02*
U.S. Cl. 417—304 5 Claims

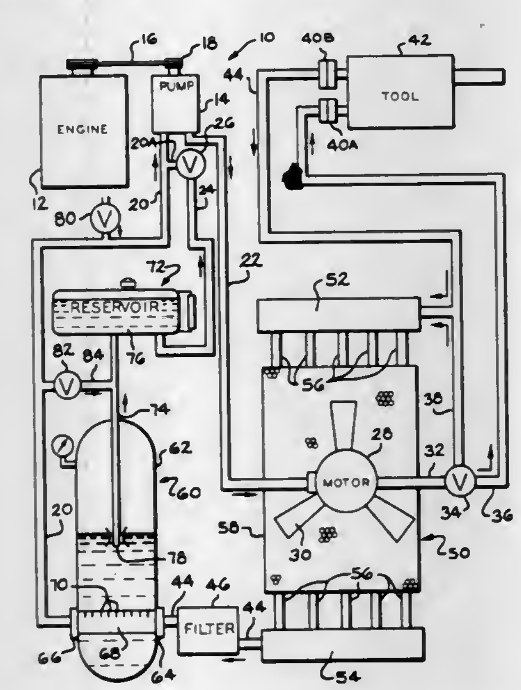

1. A hydraulic system comprising a hydraulic pump, a hydraulic fluid intake conduit in communication with said pump, a hydraulic fluid discharge conduit in communication with said pump, an accumulator containing hydraulic fluid in communication with said intake conduit, supplemental pressurization means in communication with said intake conduit, said supplemental pressurization means including a supplemental reservoir containing reserve hydraulic fluid in communication with said accumulator and said intake conduit, a valve positioned between said supplemental reservoir and said intake conduit wherein said valve opens when the pressure in said intake conduit is below a reference pressure, drawing reserve hydraulic fluid from said supplemental reservoir through said valve into said intake conduit, and said valve closes when the pressure in said intake conduit is above the reference pressure, wherein said supplemental pressurization means further includes a second valve means for ingesting air into said intake conduit, and load connectors in communication with said conduits for receiving hydraulic loading devices, wherein said supplemental pressurization means becomes functional when the pressure in said intake conduit is below a reference pressure and ceases to function when the pressure inside said intake conduit is above a reference pressure.

4,371,319
HERMETIC MOTOR COMPRESSOR

Akira Murayama; Fumio Harada; Tetsuya Arata; Masato Itagaki, all of Shimizu; Susumu Nakayama, Shizuoka, and Masahisa Sofue, Minorimachi, all of Japan, assignors to Hitachi, Ltd., Tokyo, Japan
Filed Jul. 9, 1980, Ser. No. 167,031
Claims priority, application Japan, Jul. 13, 1979, 54/88123
Int. Cl.³ F04B *21/00*
U.S. Cl. 417—312 14 Claims

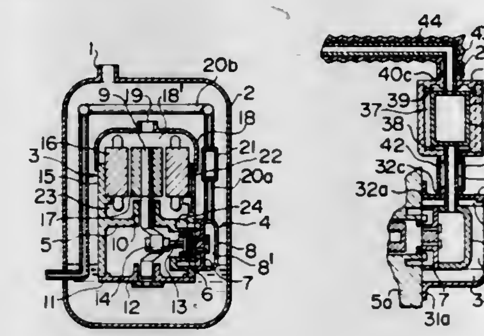

1. A hermetic motor compressor comprising: a closed housing provided at its upper portion with refrigerant gas return tubes through which a refrigerant gas is introduced thereinto to form an atmosphere of said refrigerant gas therein; a motor compressor having a motor at its upper area and a compressor at its lower area, said motor and compressor being connected to each other, said motor compressor being mounted in said closed housing by means of resilient support means; and heat insulating members covering an outer surface of a discharge chamber enclosing head cover, a discharge silencer and discharge tubes that are connected to said discharge silencer, spaces being provided between said heat insulating members and said head cover, discharge silencer and discharge tubes.

4,371,320
SEMI-ROTARY HYDRAULIC PUMP

Giulio Sacchi, Viale Bruno Buozzi 109, Roma, Italy
Filed Jul. 21, 1980, Ser. No. 170,900
Claims priority, application Italy, Jul. 23, 1979, 24557 A/79
Int. Cl.³ F04B *19/00, 29/00*
U.S. Cl. 417—461 5 Claims

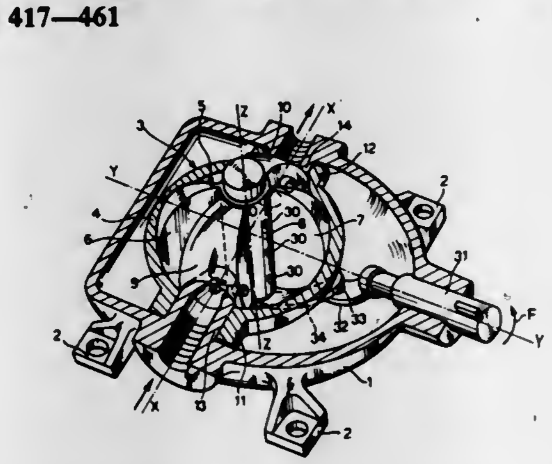

1. A semi-rotary hydraulic pump for pumping a liquid, said pump comprising:

a spherical pump body having a hollow interior, a liquid inlet, and a liquid outlet;

two spherical segment abutment stop portions fixed in diametrically opposite positions within the interior of said spherical pump body and which divide the interior of said pump body into first and second pumping chambers;

a sector mounted within said interior of said pump body, said sector having a sector shaft and two integrally formed spherical segment portions extending symmetrically with respect to said sector shaft, one of said spherical segment portions extending into each of said pumping chambers and dividing each pumping chamber into an inlet portion adjacent to said liquid inlet, and an outlet portion adjacent to said liquid outlet;

means for fluid communication between said inlet portion of each pumping chamber and said outlet portion of the other pumping chamber;

a first axis of oscillation coaxial with the axis of said sector shaft;

means for mounting said sector to allow said sector to oscillate about said first axis of oscillation;

a first pressure section formed by said inlet portion of said first pumping chamber and said outlet portion of said second pumping chamber;

a second pressure section formed by said inlet portion of said second pumping chamber and said outlet portion of said first pumping chamber;

said oscillation of said sector about said first axis of oscillation alternately causing an increase in volume in one of said first and second pressure sections, thereby creating a low pressure section, and causing a corresponding decrease in volume in the other of said first and second pressure sections, thereby creating a high pressure section;

a fixed support for supporting said pump body;

a conical seat formed in each of said spherical segment abutment stop portions;

two tubular bosses having a frusto-conical end portion formed on opposite sides of said spherical pump body;

a second axis of oscillation coaxial with the common axis of said tubular bosses and perpendicular to said first axis of oscillation;

two swivel bearings formed by said tubular bosses and said conical seats, said bearings allowing said pump body to oscillate about said second axis of oscillation;

valve means having a plurality of liquid flow passages formed in said swivel bearings, said oscillation about said second axis of oscillation placing said liquid flow passages in alignment allowing fluid communication between said liquid inlet and said low pressure section and between said liquid outlet and said high pressure section through the passages thus formed; and

drive means for causing the oscillations about said first and second axes of oscillation, said oscillations synchronized with regard to each other so that said liquid is drawn from said inlet through said valve means into said low pressure section and is expelled from said high pressure section through said valve means and said pump outlet.

4,371,321
METERING PUMP

Jochen Koblo, and Stephan Schuck, both of Wiesbaden, Fed. Rep. of Germany, assignors to Hoechst Aktiengesellschaft, Frankfurt am Main, Fed. Rep. of Germany
Filed Apr. 2, 1980, Ser. No. 136,562
Claims priority, application Fed. Rep. of Germany, Apr. 11, 1979, 2914745
Int. Cl.³ F04C *5/00;* F04B *45/08*
U.S. Cl. 418—45 7 Claims

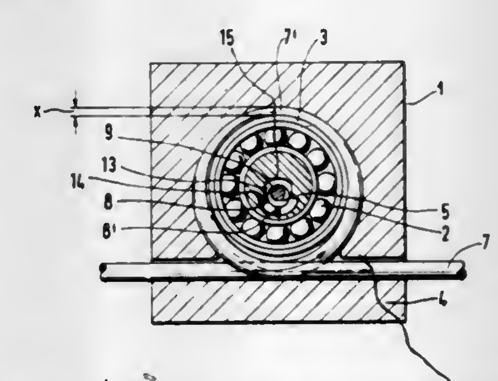

1. A metering pump for a liquid or gaseous medium, comprising:

a generally cylindrical pump housing;

a deformable tube for the medium to be conveyed, said tube

being looped 360° around the inside surface of said housing;

a shaft rotatably supported along the central axis of said housing;

a first rotating member eccentrically mounted on said shaft to constitute a first eccentric, said first eccentric having a maximum radius which is suffficient to compress said tube into a closed position against the inside surface of said housing; and

means including a second eccentric on said shaft, the diameter of said second eccentric being smaller than the diameter of said first eccentric, for mounting said first eccentric on said shaft so that compression is automatically released against said tube at the point of maximum radius of said first eccentric in response to stopping of said shaft, wherein said first eccentric includes a chamber therein and said second eccentric is located within said chamber.

4,371,322

COMBINATION AIR PUMP AND AIR FILTER

Jack R. Lorraine, Yorktown, Va., assignor to The Bendix Corporation, Southfield, Mich.

Filed Sep. 29, 1980, Ser. No. 191,731

Int. Cl.³ F04C *15/02;* **B01D** *46/10*

U.S. Cl. 418—47 **7 Claims**

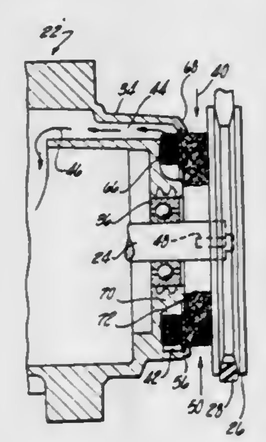

1. A combination of a filter and an air pump, the air pump having an end bell adapted to receive air into the pump in an area around the axis of the pump and direct flow of the ingested air to a point about the periphery of the pump rotor in said pump, the combination comprising:

a coarse, cylindrical filter element for receiving air and adapted to prevent the passage of large particles therethrough;

a fine, resilient, cylindrical filter element concentric with said coarse filter element for receiving air therefrom and delivering air to the pump rotor along a portion of its outer peripheral surface;

a thin, rigid plate member interposed said coarse and fine filter elements and having an aperture therein for directing the air flow from said coarse filter element to said fine filter element;

bonding means for securing said coarse and fine filter elements to opposite sides of said plate member; and

retaining means on the end bell of the pump for snappingly engaging said plate member and cooperating with the compression of said fine filter element to retain said plate member in the end bell with said coarse filter member extending therefrom.

7. A combination of a filter in an air pump for a motor vehicle having a rotor shaft extending outward from the end bell of the pump and a pulley attached to the outward end of the rotor shaft and adapted to be driven by a belt means from a rotating shaft of the motor vehicle, the combination comprising:

a non-rotating filter supported by retaining means in the end bell and partially extending outwardly of the end bell and substantially filling the space interposed the end bell and the pulley, said non-rotating filter having:

a cylindrical, coarse filter element having at least one flat end surface and an axially located cylindrically-shaped aperture therein;

a cylindrical, fine filter element having at least one flat end surface and an axially located cylindrically-shaped aperture therein, said aperture being larger than said aperture of said coarse filter element; and

a thin, rigid baffle member bonded along each broadside to said at least one flat end surfaces of each of said coarse and fine filter elements and having an axially located aperture therein smaller than said aperture of said fine filter element and said member snappably engaged with the retaining means in the end bell for compressively holding said fine filter member in the end bell.

4,371,323

SPIRAL ROTATION DISPLACEMENT MACHINE WITH PARALLEL MOTION DEVICES ENSURING RELATIVE TORSIONAL RIGIDITY

Berthold Fischer, Erftstadt-Lechenich; Hans-Peter Kabelitz, Cologne, and Andreas Schmitz, Weilerswist, all of Fed. Rep. of Germany, assignors to Leybold Heraeus GmbH, Cologne, Fed. Rep. of Germany

Filed Jun. 30, 1980, Ser. No. 164,106

Claims priority, application Fed. Rep. of Germany, Jul. 9, 1979, 2927690

Int. Cl.³ F01C *1/02, 21/00;* **F16D** *3/04*

U.S. Cl. 418—55 **12 Claims**

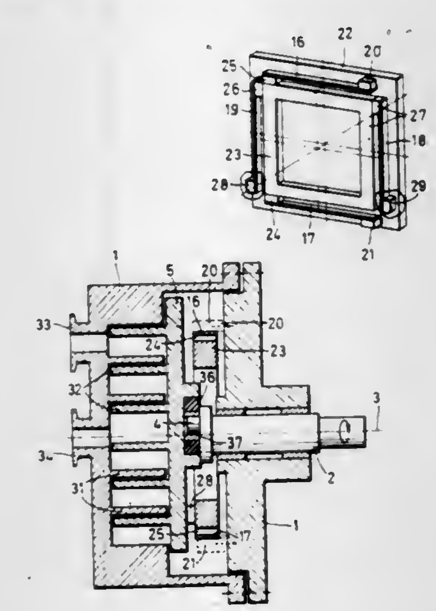

1. A rotary spiral-type fluid displacement machine comprising: two displacement elements mounted for displacement relative to one another so as to execute a translation rotary movement; and means ensuring the relative torsional rigidity of the elements while executing such translation movement, said means comprising two guides disposed substantially perpendicular to one another; wherein at least one guide comprises a parallel motion device comprising a pair of leaf springs.

4,371,324

HELICAL GEAR MACHINE WITH IMPROVED HIGH PRESSURE PORT

Berth U. Gustafsson, Österskär, Sweden, assignor to AB Bonnierforetagen, Sweden

PCT No. PCT/SE79/00182, § 371 Date May 6, 1980, § 102(e) Date May 2, 1980, PCT Pub. No. WO80/00592, PCT Pub. Date Apr. 3, 1980

PCT Filed Sep. 6, 1979, Ser. No. 195,016

Claims priority, application Sweden, Sep. 6, 1978, 7809394

Int. Cl.³ F01C *1/16, 21/12;* **F04C** *2/16, 18/16*

U.S. Cl. 418—201 **6 Claims**

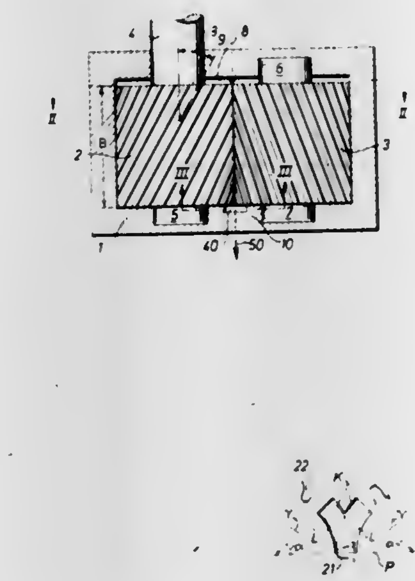

1. An axial flow gear machine comprising two helical gears running in mesh with each other, a first sealing body arranged against one end surface of the gear pair, a fluid port in the first sealing body, a second sealing body arranged against outside circles of the gears at least at one gear meshing zone, tooth profiles of the two gears being alike with each tooth profile including a tooth flank which continuously merges into a rounded top and a rounded bottom, each tooth extending less than one revolution around the respective gear, the tooth tops of one of the gears being adapted for sealing against the tooth bottoms of the other of said gears in a plane through the axes of the gears, the coacting teeth of the gears mutually sealing along the whole of the pitch point line, an orifice of the port facing the gears substantially comprises a zone defined by the union of surfaces each defined by the outside circle and a root circle of the respective gear teeth between the axes plane and a gear radius forming an angle (α) with the axes plane, said angle (α) at most attaining $B \times (1/R) \times \text{tangent } \beta$, where B is the width of the gear pair, R is the outside circle radius of the respective gear, and β is the helix angle of the gears, the angle (α) between the axes plane and the gear radius being less than 2π, and the helix angle being between 20° and 45°.

4,371,325

APPARATUS FOR FORMING STRUCTURES IN THE FORM OF SEGMENTS OF A SPHERE

Charles H. Harbison, 3217 Georgetown Pl., Birmingham, Ala. 35216

Filed Apr. 8, 1980, Ser. No. 138,298

Int. Cl.³ E04B *2/84*

U.S. Cl. 425—63 **7 Claims**

1. Apparatus for forming a structure having an inner surface which defines at least one segment of a sphere comprising:

(a) an inner support member embodying an upstanding shaft-like member adapted to be anchored to a fixed point from which a radius can be struck to define the inner surface of the segment to be formed,

(b) a collar-like member mounted for rotation on said shaft-like member,

(c) a U-shaped clevis-like member having its legs pivotally connected to said collar-like member,

(d) an elongated tubular member having external threads in threaded engagement with a threaded opening through the base of said U-shaped clevis-like member,

(e) an elongated shaft-like element extending through said tubular member,

(f) an elongated radial member secured at one end to one end of said shaft-like element with the other end of said radial member extending outwardly from said shaft-like element and with said radial member adapted for horizontal pivotal movement and vertical pivotal movement relative to said inner support member,

(g) a stop member carried by the other end of said shaft-like element in position to engage the adjacent end of said

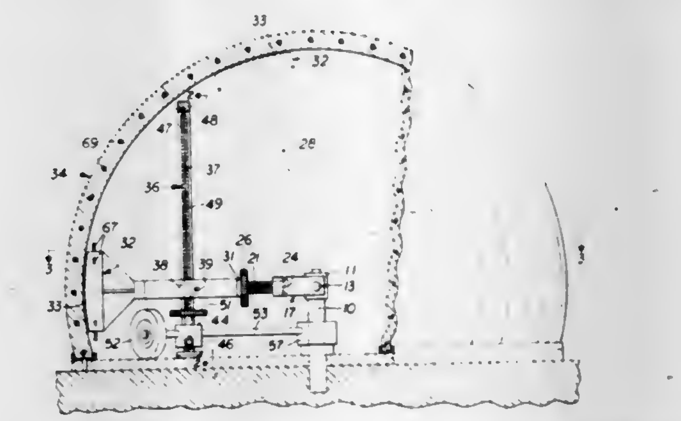

tubular member and limit axial movement of said shaft-like element relative to said tubular member,

(h) means for rotating said tubular member relative to said clevis-like member to vary the effective length of said radial member,

(i) a forming member carried by said other end of said radial member with the other surface of said forming member being in the shape of the inner surface of said segment of a sphere to be formed, and

(j) actuator means operatively connected to said radial member and adapted to pivot said radial member horizontally and vertically to selected angular locations to position the outer surface of said forming member carried by said radial member opposite and adjacent the location of the inner surface of said segment of a sphere to be formed so that said segment is formable directly on the outer surface of said forming member.

4,371,326

APPARATUS FOR MAKING PLASTIC SOLAR PANEL STRUCTURE

Roy E. McAlister, 5285 Red Rock North, Phoenix, Ariz. 85018

Division of Ser. No. 6,754, Jan. 26, 1979, Pat. No. 4,271,103. This application Dec. 4, 1980, Ser. No. 213,200

Int. Cl.³ B29C *17/07*

U.S. Cl. 425—71 **18 Claims**

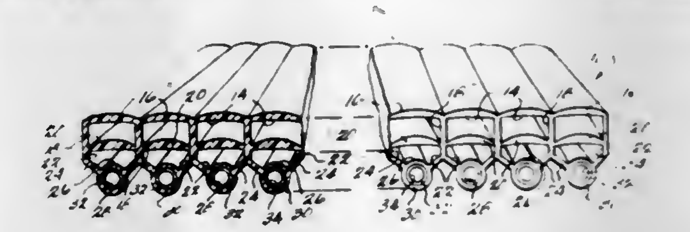

1. Apparatus for making a panel structure of plastic material having a uniform cross-sectional configuration throughout its longitudinal extent and a multiplicity of parallel passages extending longitudinally therethrough defined by a multiplicity of longitudinally extending integrally interconnected exterior and interior thin wall sections, each of said interior thin wall

sections defining parts of two adjacent passages, each of said passages being defined at least in part by an interior thin wall section, said apparatus comprising

a die having an extrusion outlet defined by a multiplicity of interconnected slots corresponding generally in number and position to said multiplicity of thin wall sections and fluid outlets between interconnected slots of the extrusion outlet corresponding generally in number and position to said passages,

means for continuously feeding plastic material to the extrusion outlet of said die at an elevated temperature sufficient to render the plastic material flowable and at a pressure sufficient to cause the heated plastic material to continuously move longitudinally outwardly of said extrusion outlet so that the interconnecting slots thereof form the heated plastic material into said multiplicity of interconnected thin wall sections,

means for reducing the temperature of the plastic material moving longitudinally away from said extrusion outlet through the slots defining the exterior thin wall sections by exterior heat exchange while controlling the exterior configuration thereof for a time period sufficient to enable the moving exterior thin wall sections to be self-sustaining, and

means for feeding fluid to said fluid outlets so as to cause fluid to flow longitudinally outwardly of said fluid outlets into each passage defined by the thin wall sections moving longitudinally away from said extrusion outlet while controlling the relative fluid pressure acting within adjacent passages on opposite sides of said interior thin wall sections so as to control the position thereof relative to said exterior thin wall sections until the temperature thereof is reduced by heat exchange with said fluid sufficiently to enable said moving interior thin wall sections to be self-sustaining,

said die further including separate annular slot-shaped outlets disposed in surrounding relation to certain of said fluid outlets and surrounded relation with the interconnected slots associated therewith and means for continuously feeding a second plastic material to the annular slot-shaped outlets of said die at an elevated temperature sufficient to render the second plastic material flowable and at a pressure sufficient to cause the heated second plastic material associated with each annular slot-shaped outlet to continuously move longitudinally outwardly thereof in a sleeve formation which is expanded outwardly into engagement with the thin wall sections defining the passage within which the sleeve is moving by the associated fluid flowing therein.

4,371,327

APPARATUS FOR USE IN PRODUCING CUP-SHAPED PASTRIES

Andre Fievez, 32, rue de Valenciennes, 59198 Haspres, France

Filed May 20, 1980, Ser. No. 151,732

Int. Cl.³ B29C *1/00, 17/10;* **A21B** *11/10*

U.S. Cl. 425—218 **7 Claims**

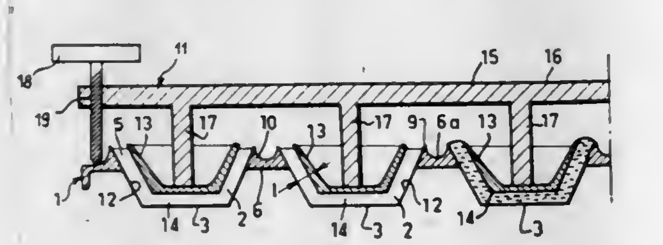

1. Apparatus for producing pastry comprising a plate having a plurality of mold cavities disposed at spaced intervals in a uniform repeating and modular pattern, means for cutting a main sheet of dough laid over said plate into individual dough pieces each registering with a mold cavity, means for implementing removal from said plate of portions of said dough sheet between said cavities and means for pressing said individual dough pieces into respective cavities of said sheet, comprising a rigid support and a plurality of cup-shaped pressing elements secured on the lower side of said support, said cup-shaped pressing elements being of a shape corresponding to the shape of said mold cavities but of smaller size to be received in said mold cavities, and being disposed on said support at spaced intervals in the same uniform repeating, modular pattern as said mold cavities so that each cup-shaped element registers and cooperates with a corresponding mold cavity of said plate, said cup-shaped elements cooperating with said mold cavities to press said individual dough pieces into said mold cavities and confine them between said mold cavities and said cup-shaped elements.

4,371,328

APPARATUS FOR MAKING COMPOSITION LOGS BY COMPRESSING PARTICLES

Duane D. Giles, 3605 N. Paradise Rd., Flagstaff, Ariz. 86001, and Richard W. Osborn, 4667 Ridgeway, Los Alamos, N. Mex. 87544

Continuation-in-part of Ser. No. 137,790, Apr. 7, 1980, abandoned. This application Apr. 14, 1981, Ser. No. 254,063

Int. Cl.³ A01J *25/12*

U.S. Cl. 425—344 **34 Claims**

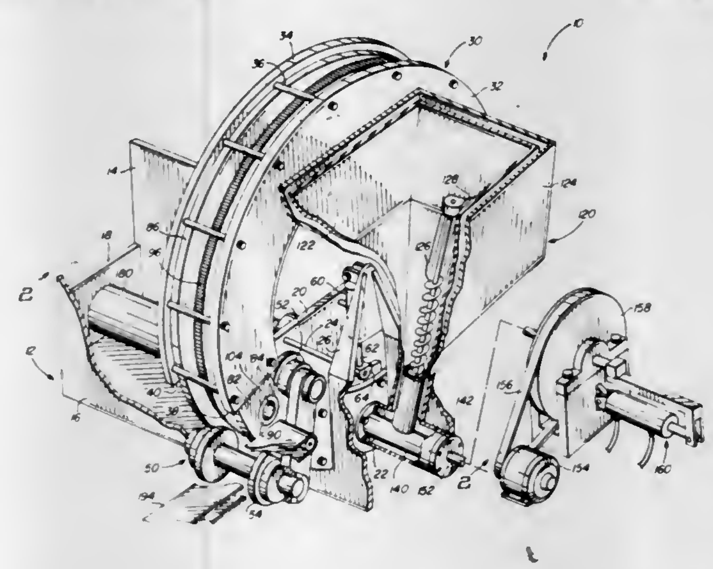

1. Particulate compacting apparatus, in combination, comprising:

a base having a filling station, a compression station and a discharge station;

a frame having an axis of rotation and mounted rotatably on the base;

a plurality of compression chambers mounted on the frame;

a filling subassembly mounted at the filling station for successively filling the compression chambers with particulate material and for precompressing the particulate material;

a compression subassembly mounted at the compression station for further compressing the particulate material;

indexing drive means mounted on the base for advancing the frame stepwise to advance the compression chambers from station to station; and

a discharge subassembly mounted at the discharge station cooperative with the compression chambers for successively discharging the logs therefrom.

4,371,329

APPARATUS FOR MAKING CONFECTIONERY

Gordon Steels, Peterborough, England, assignor to Baker Perkins Holdings Limited, Peterborough, England

Filed Jun. 3, 1981, Ser. No. 269,856

Claims priority, application United Kingdom, Jun. 18, 1980, 8019864

Int. Cl.³ B29C *7/00, 3/02*

U.S. Cl. 425—437 **5 Claims**

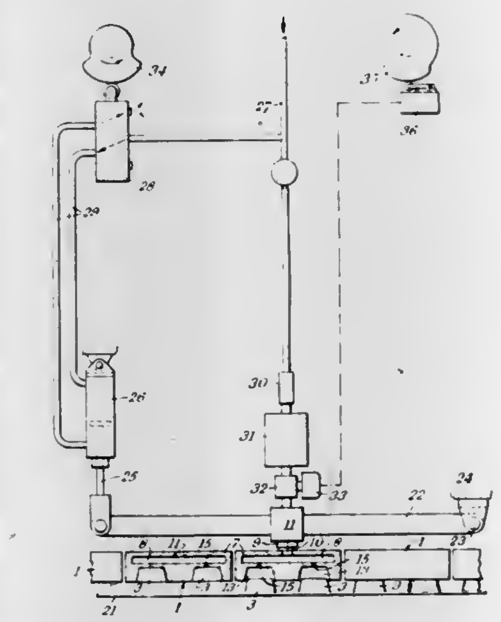

1. Apparatus for moulding confectionery, comprising a conveyor, a train of moulds attached to said conveyor, each of said moulds comprising a body formed with at least one mould cavity having in its base a plurality of minute holes, a backing plate, formed with a hole, being attached to the body and being spaced from the base of each mould cavity to define an air chamber, and a demoulding unit, said conveyor being operative to bring said moulds in succession to a position in which said mould is disposed beneath said demoulding unit in inverted relation and with each mould cavity therein facing downwardly, said demoulding unit including an air pipe, means for moving said air pipe downwardly into sealing engagement with said hole in the backing plate of the mould positioned beneath the demoulding unit and means for discharging compressed air from said pipe into the air chamber of said mould and thence through the minute holes in the base of each mould cavity to effect discharge of the confectionery in each mould cavity in the mould.

4,371,330

ADJUSTABLE SCREED BAR APPARATUS

Peter C. Heffernan, Piedmont, S.C., assignor to W. R. Grace & Co., Cambridge, Mass.

Filed Sep. 22, 1980, Ser. No. 189,262

Int. Cl.³ B28B *1/29;* **E01C** *19/22*

U.S. Cl. 425—458 **2 Claims**

1. An adjustable screed bar assembly for leveling wet fluid layers of lightweight thermal-insulating concrete cast over substrates, said assembly comprising;

(a) a horizontally arranged screed bar of rectangular configuration for leveling said concrete; and

(b) an adjustable support assembly for said screed bar positioned near each end of said screed bar, said support assembly comprising;

(i) a vertical shaft having a sled runner attached at its lowermost end, said runner having a curved leading end to permit the runner to easily move through said concrete and over irregularities in said substrate; said shaft further having a vertical channel therein; and

(ii) screed bar bracket means adjustably mounted upon said shaft upwardly of said runner comprising an L-shaped metal bracket receiving said screed bar, a pair of angle irons one end of each of which is secured to said metal bracket, the remaining end of each of which angle irons having an opening through which said shaft slides and a collar adjacent said opening and secured to said angle iron end; said collar having a locking thumbscrew

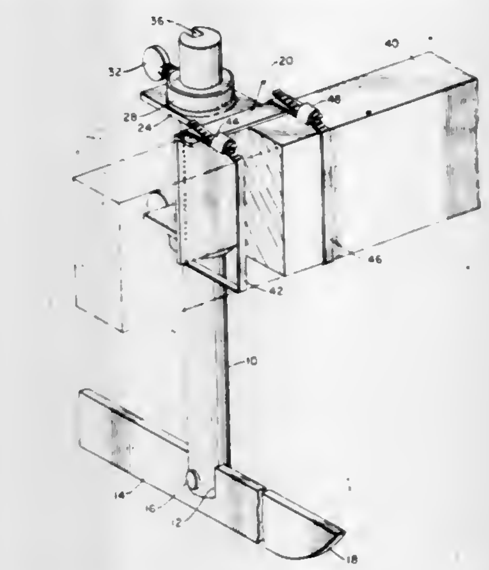

which when operated secures said screed bar bracket means into said vertical channel in said shaft to thereby prevent said bracket means from moving vertically with respect to said shaft and also rotationally about said shaft.

4,371,331

CIGARETTE LIGHTER WITH FLIP-OUT WINDSHIELD

Kuo-Cheng Lee, No. 18-2, Yu-Lo La., Pei-Tah Rd., Wen-Hua Li, Hsin Chu, Taiwan

Filed Aug. 14, 1980, Ser. No. 177,841

Claims priority, application Taiwan, Mar. 12, 1980, 6921134

Int. Cl.³ F23Q *25/00*

U.S. Cl. 431—151 **5 Claims**

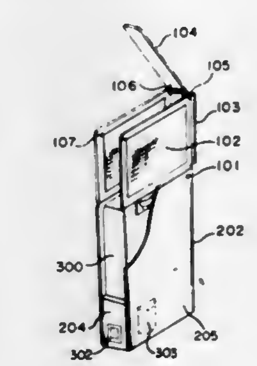

1. A cigarette lighter with flip-out windshield comprising a conventional lighting device including a fuel tank, lighting mechanism and a flaming tip, a casing in which said conventional lighting device is accommodated, characterized in having a windshield formed of two symetrically opposing side panels, a rear panel fixedly connecting said side panels, a top lid with its rear edge hinged to each of two upper rear corners of said opposing two side panels, said opposing two side panels being hinged at the lower, rear corners to said casing with a hinge pin and being capable of rotating around said hinge pin to move in and out of clearance provided between said conventional lighting device and said casing.

4,371,332

METHOD OF CONTROLLING THE TENSION OF A STRIP WITHIN FURNACE

Motoyuki Matsuo, Akashi; Haruo Komoto, and Yoshihisa Mita, both of Kobe, all of Japan, assignors to Mitsubishi Denki Kabushiki Kaisha, Tokyo, Japan

Filed Jun. 15, 1981, Ser. No. 274,052

Claims priority, application Japan, Jun. 19, 1980, 55-84824

Int. Cl.³ F27B *9/28;* F26B *13/00;* C21D *9/52*

U.S. Cl. 432—1 **1 Claim**

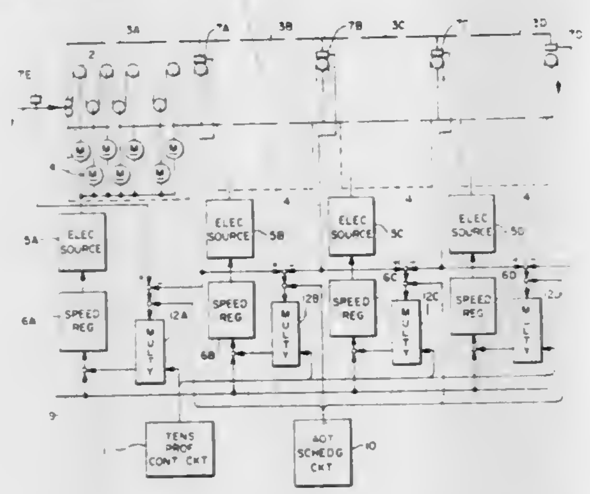

1. A method of controlling the tension of a strip within a furnace forming a process line which is divided into a plurality of sections, the method comprising the steps of comparing a predetermined tension which has been allotted to each of said sections with an actual tension which has been sensed in a corresponding one of said sections so as to form a tension deviation for each of said sections, comparing a predetermined reference tension profile which has been developed for the entire furnace with an actual tension profile which has been sensed by tension sensors in said furnace so as to determine a correction factor corresponding to the difference between said reference tension profile and said actual sensed tension profile, correcting said tension deviation in accordance with said correction factor, and controlling both said tension allotted to each of said sections and said tension profile developed for said process line with said corrected tension deviation and, upon varying the so determined tension profile, successively and sequentially changing said tension allotted to said respective sections, starting with a predetermined section of the furnace.

4,371,333

DEVICE AND PROCESS FOR OPERATING AN OPEN BAKING FURNACE FOR MANUFACTURING CARBON-BEARING, SHAPED BODIES

Robert Moser, Steg, Switzerland, and Gottfried Jungblut, Wehr, Fed. Rep. of Germany, assignors to Swiss Aluminium Ltd., Chippis, Switzerland

Filed Aug. 7, 1981, Ser. No. 290,755

Claims priority, application Switzerland, Aug. 15, 1980, 6165/80

Int. Cl.³ F27D *1/16;* F27B *7/00*

U.S. Cl. 432—3 **10 Claims**

8. A process for operating an open baking furnace comprising the steps of:

providing a flue with a plurality of headwalls wherein one of said headwalls divides said flue into a first chamber and a second chamber;

providing said first chamber with a plurality of openings positioned along the longitudinal axis of said first chamber;

locating an exhaust gas manifold at the first of said plurality of openings closest to the one of said headwalls of said

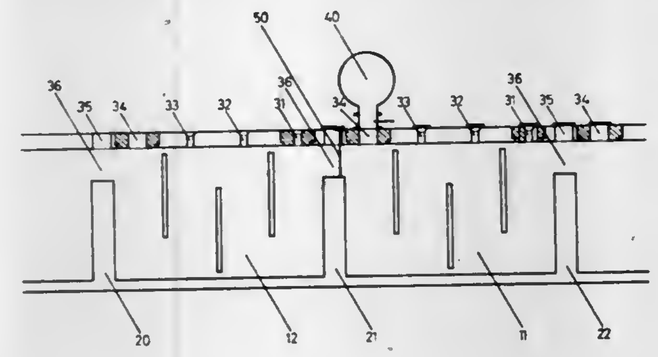

chamber such that said exhaust gas manifold is offset from all of said plurality of headwalls; and

closing off the remaining openings.

4,371,334

SHAFT FURNACE, PARTICULARLY THE REFRACTORY CONSTRUCTION OF THE BOTTOM THEREOF

Jacobus Van Laar, Santpoort, Netherlands, assignor to Estel Hoogovens BV, IJmuiden, Netherlands

Filed Mar. 19, 1981, Ser. No. 245,375

Claims priority, application Netherlands, Mar. 21, 1980, 8001669

Int. Cl.³ F27D *1/08;* C21B *7/08;* F27D *1/14*

U.S. Cl. 432—95 **9 Claims**

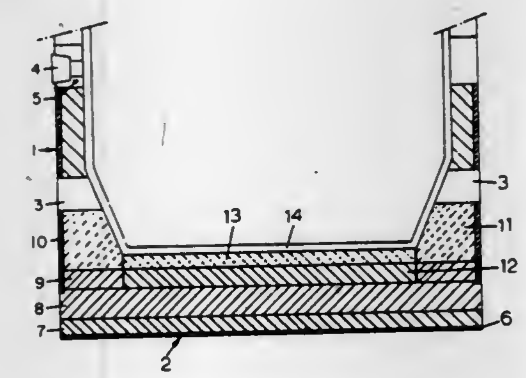

1. In a shaft furnace having a bottom and a furnace wall extending upwardly from the bottom, the bottom having a plurality of layers of refractory materials, which layers comprise a graphite layer, above the graphite layer an intermediate layer of material having a λ-value (coefficient of thermal conductivity) lower than that of the material of the graphite layer, and above the intermediate layer a third layer of material having a λ-value which is of not more than 4 kcal/m.h.° C. and is lower than that of the material of the intermediate layer, the improvement that:

the λ-value of the material of said intermediate layer is in the range 12 to 30 kcal/m.h.° C.

4,371,335

ZONE SEPARATOR FOR MULTIPLE ZONE VESSELS

John B. Jones, Grand Junction, Colo., assignor to Paraho Corporation, Grand Junction, Colo.

Filed Apr. 17, 1981, Ser. No. 255,163

Int. Cl.³ F27D *1/08;* E27B *17/12;* B01J *1/00;* F24F *9/00*

U.S. Cl. 432—95 **13 Claims**

1. Apparatus for treating non-uniformly sized and shaped particulate solid material, comprising:

(a) a substantially vertically extending hollow vessel having upper and lower zones, wherein the particulate material is fed into the upper zone of the vessel and treated particulate material is withdrawn from the lower zone of the vessel, said zones having dissimilar gaseous atmospheres passing therethrough, and wherein the particulate material descends under the force of gravity through the upper zone and then the lower zone; and

(b) zone separator means situated within said vessel between said upper and lower zones for passing said particulate material from the upper zone to the lower zone on a uniform basis across the lateral extent of said vessel while simultaneously preventing the passage of said gaseous atmospheres through said zone separator means from one zone to the other, said zone separator means having a plurality of down-comer throats for permitting uniform downward flow of said material therethrough and a plurality of barrier means adjacent to said down-comer throats for preventing passage of said material and said gaseous atmospheres therethrough and for directing said material toward said down-comer throats, each of said barrier means including at least one sloped wall extending upwardly and away from the top of one of said down-comer throats at an angle above the horizontal plane greater than the repose angle of said particulate solid material in said vessel, each of said down-comer throats having a minimum lateral dimension of from about 4 to

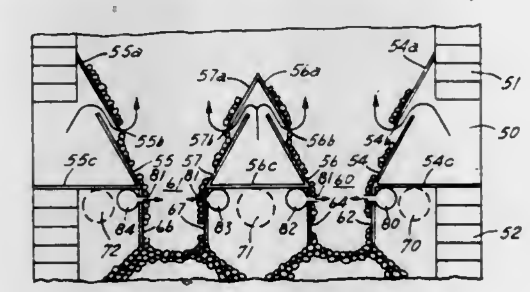

about 6 times the maximum dimension of the largest particle of said solid material to be treated, the combined minimum lateral cross-sectional area of said plurality of down-comer throats lying within the range of from about 30 percent to about 40 percent of the lateral cross-sectional area of said vessel at the location of said zone separator means, said down-comer throats having downwardly extending side walls for directing said solid particulate material, each of said side walls having a vertical length equal to at least the minimum lateral cross-sectional dimension of said down-comer throat, said side walls forming gas collecting spaces therebetween for collecting gases which disengage from the upper surface of the bed of particulate solid material in said lower zone, said zone separator means further including seal gas injection means in fluid communication with said down-comer throats for injecting a sealing curtain of gas therein for maintaining the separation of the gaseous atmospheres in said upper and lower zones of the vessel while simultaneously permitting uniform downward flow of said particulate material through said down-comer throats.

4,371,336

ORTHODONTIC POSITIONER

Terry B. Hilleman, 621 SW. 74th Ter., Plantation, Fla. 33317

Filed Jan. 29, 1981, Ser. No. 229,560

Int. Cl.³ A61C *7/00*

U.S. Cl. 433—6 **3 Claims**

1. An improved tooth positioner utilizing tooth contacting edges for actively moving individual teeth to or toward an ideal centric occlusion position by simultaneously engaging, moving, and positioning said individual teeth of upper and lower teeth by force being exerted on contacting edges and a minimal area of adjacent sides of buccal and lingual surfaces of each individual tooth by the act of biting into said tooth positioner, comprising:

a one piece preform tooth impression means for providing resilient lateral force to individually move and position individual teeth of said upper and lower teeth by simultaneously engaging only the contacting edges of said upper and lower teeth and a minimal adjacent area of said buccal and lingual surface of each tooth of said upper and lower teeth, said one piece preform tooth impression means for forcing said contacting edge of each tooth to move each said tooth into the most ideal centric occulsion and cusp-fossa relationship by the act of biting into said one piece preform tooth impression means with said upper and lower teeth and for retaining said contacting edge and a minimal adjacent area of said buccal and lingual surfaces of each individual said tooth in the most ideal centric occulsion and cusp-fossa relationship by the act of biting into said one piece preform tooth impression means with said upper and lower teeth,

said one piece preform tooth impression means for providing a comfortable, light prostetic device that enhances a user's cooperation for continued use,

said one piece preform tooth impression means having sepa-

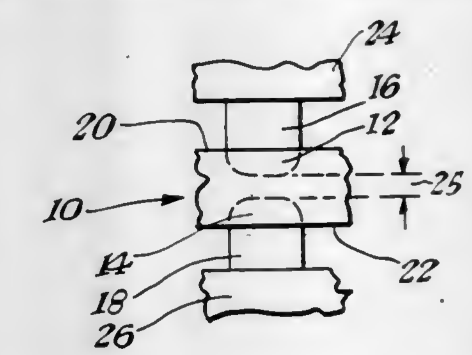

rated resilient tooth impressions for individual teeth of said upper and lower teeth situated in certain select positions generally at the ideal centric occulsion and cusp-fossa relationship,

said one piece preform tooth impression means having a top with individual upper contacting edge tooth impressions and a bottom with individual lower contacting edge tooth impressions,

said upper contacting edge tooth impressions and lower contacting edge tooth impressions covering a minimal adjacent area of the buccal and lingual surface of approximately two to three millimeters of each tooth of said upper teeth and said lower teeth,

said upper contacting edge tooth impression and said lower contacting edge tooth impression terminating well short of contact with gum tissue of said upper and said lower teeth.

4,371,337

ORTHODONTIC BRACKET

Erwin C. Pletcher, P.O. Box 566, Rancho Santa Fe, Calif. 92067

Filed May 20, 1981, Ser. No. 265,377

Int. Cl.³ A61C *7/00*

U.S. Cl. 433—10 **14 Claims**

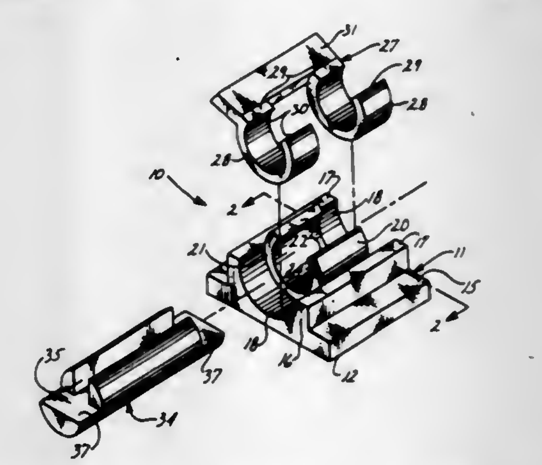

1. An orthodontic bracket assembly, comprising:

a base with a labially extending support member having a mesiodistally extending opening therethrough, the open-

ing extending through a first slot in the support member to provide clearance for insertion of an arch wire;

a locking member having a hub with a mesiodistal passage therethrough, the passage extending through a second slot to provide clearance for insertion of the arch wire; and

an arch-wire bar configured to fit in the support-member opening and locking-member passage, the bar having a mesiodistal third slot to receive the arch wire, the locking member being rotatable on and captively retained by the bar, the first and third slots being generally aligned;

the locking member being rotatable between open and closed positions, the open position aligning the slots to enable seating of an arch wire in the bar slot, and the closed position placing the second slot out of alignment with the first and third slots to capture the arch wire within the bracket assembly.

4,371,338

DENTAL ARTICULATOR HAVING SIMPLIFIED MEANS FOR MOUNTING DENTAL CASTS

Roger W. Mercer, 1340 Arlington Dr., Fairborn, Ohio 45324, and Louis E. Hay, 847 Woodhill Rd., Dayton, Ohio 45431

Filed Jul. 11, 1979, Ser. No. 56,536

Int. Cl.³ A61C *11/00*

U.S. Cl. 433—60 **2 Claims**

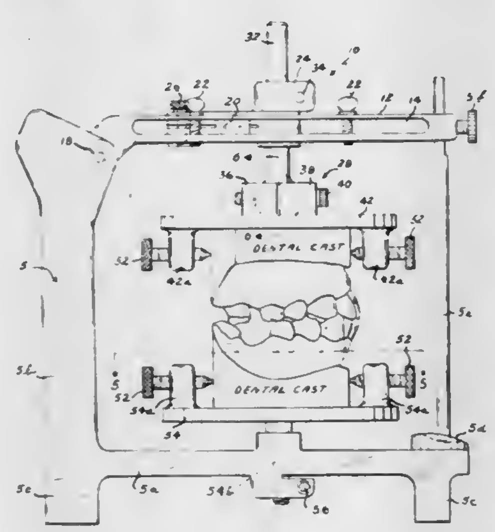

1. A dental articulator for mounting and adjusting matched upper and lower dental casts having at least one unthreaded aperture in the base of said dental casts, said articulator comprising:

(a) an articulator body having a base element and at least one vertical element extending upward from said base element;

(b) a lower dental cast mounting jig supported by the base element of said articulator body, said mounting jig having at least one upward protruding locating pin for engaging an aperture in the base of said lower dental cast and locating said lower dental cast in mounted position on said mounting jig, and further having fastening means for releasably retaining said lower dental cast in mounted position on said mounting jig; and,

(c) an upper dental cast mounting jig for mounting and adjusting said upper dental cast in centric anatomical relationship with said lower dental cast, said upper mounting jig having a normally horizontal frame member with spaced apart elongated side elements and being pivotally joined to the vertical element of said articulator body to be superimposed with the base element of said articulator body, an elongated transverse bar member spanning the side elements of said frame member and being retainably movable fore and aft with the side elements of said frame member for providing anterior-posterior movement of said upper dental cast in relationship with said lower dental cast, a lateral movement block member longitudinally and retainably slidable on said transverse bar member for providing lateral movement of said upper dental cast in relationship with said lower dental cast and having a vertical bore therethrough, a vertical movement member retainably movable in the vertical bore of said lateral movement block member for providing vertical movement of said upper dental cast in relationship with said lower dental cast, a dependent wobble plate assembly operably attached to said vertical movement member for providing retainable rotational and canting movement of said upper dental cast in relationship with said lower dental cast, said wobble plate assembly having at least one downward protruding locating pin for engaging an aperture in the base of said upper dental cast and locating said upper dental cast in mounted position on said wobble plate assembly, and fastening means for releasably retaining said upper dental cast in mounted position on said wobble plate assembly.

4,371,339

DENTURE MOLD, AND METHOD OF AND ARRANGEMENT FOR ITS MANUFACTURE

Manfred P. Zeiser, Im Wolfsgalden 8, 7141 Schwieberdingen, Fed. Rep. of Germany

Filed Dec. 5, 1980, Ser. No. 213,549

Claims priority, application Fed. Rep. of Germany, Dec. 11, 1979, 2949697

Int. Cl.³ A61C *19/00*

U.S. Cl. 433—74 **41 Claims**

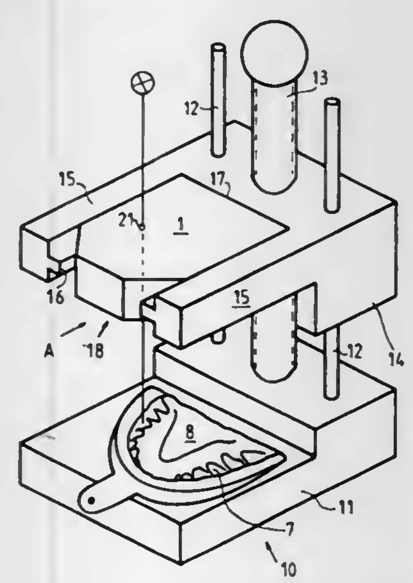

1. A denture mold for making teeth prostheses, such as fillings, crowns, bridges, denture parts and the like, comprising a base element for releasably supporting a positive copy of teeth and made of a mold material; and a plurality of pins arranged to connect the positive copy with said base element, said base element being formed as a prefabricated plate of a shape-retaining material and said pins being arranged on said plate parallel to one another and fixed on the same, so that said plate serves as a holder for said pins during making of the positive copy, whereupon said plate serves as a base of the denture mold, each of said pins being elongated and having at least two portions, as considered in direction of elongation, said portions having different cross-sections separated by a separation plane and a maximum cross-section in said plane, said portions of each of said pins being conical and having base faces superimposed over one another.

4,371,340

DOWELL PIN AND METHOD OF MAKING DENTAL MODELS

Hiroo Imaizumi, Tokyo, Japan, assignor to Colpo Company, Ltd., Tokyo, Japan

Filed Jun. 8, 1981, Ser. No. 271,270

Claims priority, application Japan, Jun. 14, 1980, 55-83422[U]

Int. Cl.³ A61C *19/00*

U.S. Cl. 433—74 **10 Claims**

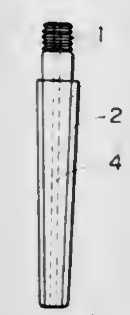

1. A dental dowel pin, said dowel pin being formed entirely of a relatively hard plastic material, said dowel pin being formed with a smooth mirror-like finish over substantially all of its external surface, said finish having relatively low friction and relatively low abrasion characteristics and said dowel pin being formed with a through passage running centrally through its entire length, whereby said dowel pin can be implanted in an already hardened dental model using adhesive in a prepared oversized opening in said model with the trapped air and excess adhesive caused by implantation of the pin escaping via said through passage to thus prevent adhesive from overflowing onto the outside of said pin and onto said mold.

4,371,341

DENTAL HANDPIECE

Takasuke Nakanishi, Kanuma, Japan, assignor to Nakanishi Dental Mfg. Co. Ltd., Kanuma, Japan

Filed Apr. 13, 1981, Ser. No. 253,359

Int. Cl.³ A61C *1/07*

U.S. Cl. 433—118 **3 Claims**

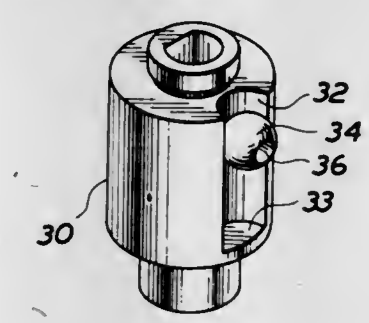

1. A dental handpiece for the treatment of root canals comprising: a handle portion; a powerhead assembly integrally and perpendicularly linked to said handle portion; a bushing integrally inserted into said handle portion; a rotating driving shaft journaled for rotation by means of a sleeve in said bushing, said rotating driving shaft having an integral circular disc at its top end portion, said circular disc carrying around its periphery a pinion lug which is parallel to both said disc and said rotating driving shaft; a hollow cylinder kept in motion inside said powerhead assembly at its top end held by a bushing and at its lower end by a bushing cap respectively, said hollow cylinder being perpendicular to the axis of said rotating driving shaft and also having an arc-shaped longitudinal slot; a ball bearing slidably inserted into said slot having a spherical surface to coincide with the arc-shaped slot and slidably inserted into said longitudinal slot, said ball bearing having a central horizontal opening; said pinion lug of said circular disc being slidably inserted into the central horizontal opening of said ball bearing so as to couple said rotating driving shaft with said hollow cylinder; said handle portion being provided with a pair of slits at its top portion and parallelly to said rotating driving shaft; said top portion being also formed with a pair of bores vertically to cross said slits respectively, one of said bores being provided to abut upon a longitudinal hollow of said hollow cylinder; another bore being provided with a spiral groove; a locking plate having a pair of openings to coincide with said bores and slidably inserted into said slits; a screw threadedly set into said grooved bore and said neighboring slit to fix said locking plate; and a drilling tool firmly held into said longitudinal hollow of said cylinder and fastened by a screw set into a top portion of said drilling tool through said ungrooved bore and said neighboring opening so as to keep said drilling tool at right angle to the axis of said rotating driving shaft whereby said drilling tool is driven to rotate in one direction and in the opposite direction alternately through a continuous circular rotation of said driving shaft.

4,371,342

DENTAL ANCHORING MEANS

Stuart J. Filhol, Castlefrek, County Cork, Ireland

Filed Apr. 29, 1981, Ser. No. 258,651

Claims priority, application United Kingdom, Apr. 29, 1980, 8014134

Int. Cl.³ A61C *5/04*

U.S. Cl. 433—225 **7 Claims**

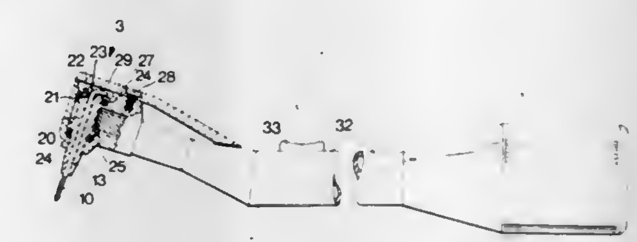

1. In combination dental anchoring means and a dental handpiece for receiving the anchoring means; the anchoring means comprising a shank section and a threaded dental pin section detachably secured to one end of the shank section, said pin section adapted for detachment from the shank section when the pin section is screwed into a tooth, the shank section having at its end remote from the pin section a turned-over securing portion; the dental handpiece means for holding the anchoring means, said holding means comprising a rotatable member having a longitudinal axial bore for receiving the shank section, said dental pin section projecting through an end of said bore, said dental handpiece comprising powered means for rotatably driving the rotatable member,

wherein the improvement comprises defining the rotatable member as a sleeve in which the bore is open-ended, the pin section projecting through one, lower end of the bore and at the other, upper end of the bore the rotatable member having a stop member, the dental anchoring means being locatable through the bore with said turned-over portion engaging the stop member so that the anchoring means rotates with the rotatable member;

said improvement further comprising forming the rotatable member united as part of the dental handpiece so that the rotatable member is in direct driving engagement with said driving means, and the dental handpiece further comprising a securing member movable to be locatable over the upper end of said bore to retain the anchoring means in the rotatable member against upward movement along the bore.

4,371,343
PROCESS AND SYSTEMS FOR THE ELECTRONIC GENERATION OF WIDE-ANGLE MOVING IMAGES FOR TRAINING IN THE NAVIGATION OF SHIPS
Philippe Y. J. Paris, Fontenay le Fleury, and Alain Couturier, La Celle St. Cloud, both of France, assignors to Le Materiel Telephonique Thomson-CSF, Columbes, France
Filed Feb. 28, 1980, Ser. No. 125,656
Claims priority, application France, Mar. 2, 1979, 79 05497
Int. Cl.³ G09B *9/06*
U.S. Cl. 434—29 **8 Claims**

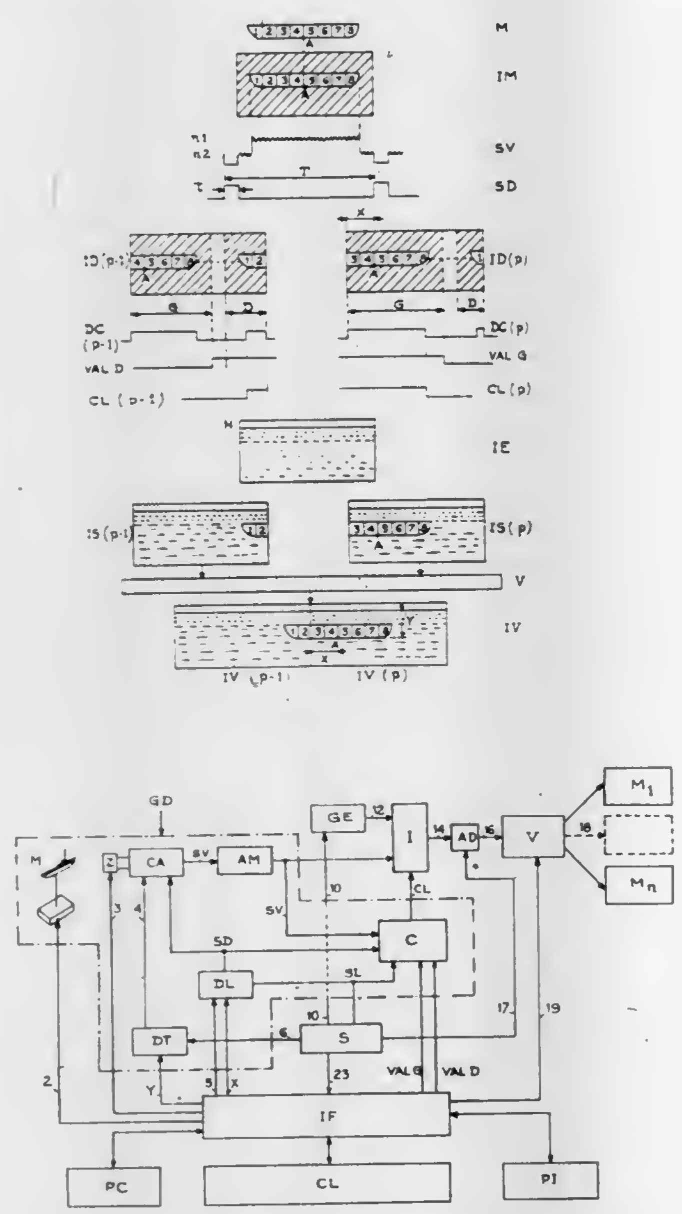

1. A process for electronically generating wide-angle moving images, especially for systems providing training in the navigation of ships, by means of which a wide-angle image constituted by the apparent juxtaposition of elementary images subtending respectively an angle α on as many television monitors, and by means of which an object represented on these images moves from one image to the next without discontinuity, comprising the steps of:
(a) defining the coordinates of the object, which form the wide-angle image and the displayed elementary images, by the coordinates of a reference point (A) determined by the intersection of the support rotational axis of a model of the object (M) and the base of this model;
(b) pointing the optical axis of a camera at the reference point;
(c) determining the dimensions and distance of the object as well as those of the model such that the camera angle of view always exceeds the apparent angle subtended by the model;
(d) feeding the camera with a synchronization signal, which is a line blanking signal (SD) delayed with respect to the line blanking reference signal fed to all the monitors, this delay being proportional to the position of the object in the moving image;
(e) obtaining an object video signal (SV) from the camera and applying it to a monitoring cathode-ray tube synchronized by the line blanking reference signal to produce a shifted object image (ID (p−1) and ID (p)) divided vertically by a black band corresponding to the delayed line blanking signal fed to the camera, into a right-hand part and a left-hand part on either side of this band;
(f) producing a given number of elementary images by feeding a memory, such as a magnetic-disc video recorder, the line blanking reference signal for the simultaneously triggered readings of as many synthetic images recorded in this memory;
(g) determining the order p of the elementary image in which the reference point is located at a given instant by taking the whole-number part of the quotient resulting from the division of the reference point azimuth θ in the wide-angle image by the angle α;
(h) determining the azimuth X of the reference point in the image of order number p, and taking the remainder resulting from the division of the azimuth θ by the angle α;
(i) producing the synthetic images one-by-one in a cyclic manner, as a function of the order number of the elementary image considered by electronic inlaying of the shifted ship image onto an environment image in the case of an elementary image of order number p, p−1, or p+1, and by simple recording of the environment image for the other order numbers;
(j) determining the delay R(p) of the delayed line blanking signal fed to the camera for an image of order number p such that the azimuth of the reference point in this image is effectively equal to the value X, the delays R(p−1) and R(p+1) of the delayed line blanking signal fed to the camera for an image of order number p−1 and for an image of order number p+1 being R(p)−τ amd R(p)+τ, the interval τ being the duraction of the delayed line blanking signal as well as that of the line blanking reference signal;
(k) validating the inlay when the azimuth X is less than α/2 for the left-hand part of the shifted image of order number p, as well as for the right-hand part of the image of order number p−1, and when the azimuth is greater than α/2 for the right-hand part of the image of order number p as well as for the left-hand part of the image of order number p+1.

4,371,344
TENSION MODEL DEVICE
Edward Gorczyca, 2905 Hemlock Dr., Allison Park, Pa. 15101
Filed May 4, 1981, Ser. No. 260,043
Int. Cl.³ G09B *23/08*
U.S. Cl. 434—302 **3 Claims**

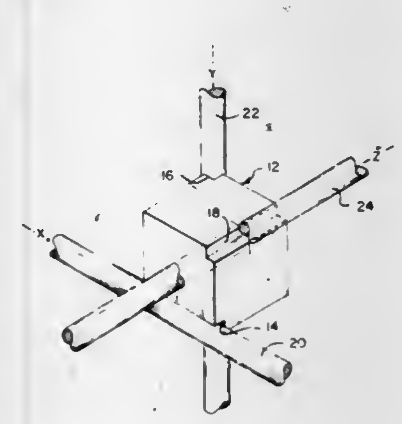

1. A tension model device comprising:
(a) three struts each having a pair of opposite ends and crossing each other near a center portion of each strut;
(b) a plurality of tension strands in which strands are joined from each end of all the struts to each end of the other struts; and
(c) a removable block means inserted where the struts cross each other, the block means having three non-intersecting notches on its surface engaging each strut and spacing the struts from each other where the struts cross each other, the notches are each formed by two substantially planar surfaces intersecting each other.

4,371,345
MULTI-DIMENSIONAL DISPLAY EQUIPMENT
John H. W. Palmer, Henleaze, and Alexander J. R. MacDonald, Clifton, both of England, assignors to National Research Development Corporation, London, England
PCT No. PCT/GB79/00033, § 371 Date Oct. 17, 1980, § 102(e) Date Oct. 17, 1980, PCT Pub. No. WO80/01728, PCT Pub. Date Aug. 21, 1980
PCT Filed Feb. 19, 1979, Ser. No. 198,008
Int. Cl.³ G09B *23/30, 25/00*
U.S. Cl. 434—368 **23 Claims**

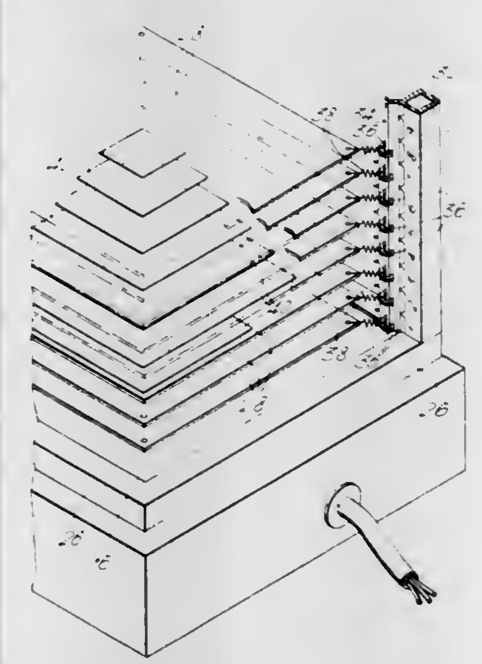

1. Multi-dimensional display equipment, comprising a plurality of transparent panels bearing representations of cross-sections of a three-dimensional body, and a support structure in which the panels are mounted in their correct relative order and spaced apart, and allowing the sectional representations to be viewed in situ from different positions externally of the structure by means of light transmitted through the transparent panels, the support structure being adapted to support the panels individually and peripherally so that they are individually removable from the support structure to vary the amount of the body represented or replaceable by panels representing a different body, the panels being rectangular and of flexible material and operatively mounted to the support structure, resilient means for applying tension to the corners of the panels whereby the panels are omni-directionally tensioned in a manner which is capable of maintaining the panels in an essentially flat planar configuration in a horizontal plane or in any other plane.

4,371,346
SYSTEM FOR PROPULSION OF BOATS BY MEANS OF WINDS AND STREAMS AND FOR RECOVERY OF ENERGY
Jean-Pierre Vidal, 2, place des Eglantines, 91540 Mennecy, France
Filed Aug. 20, 1980, Ser. No. 179,853
Claims priority, application France, Aug. 31, 1979, 79 21904
Int. Cl.³ B63H *13/00*
U.S. Cl. 440—8 **11 Claims**

1. An improved system for propulsion of a floating unit of the boat type, by means of winds and streams and for recovery of disposable energy from floating stations neither moored nor anchored said improved system comprising mounted on said floating unit:
a superstructure supporting device and, on said structure;
at least one aerial feathered propeller having a substantially horizontal shaft and provided at the upper end of a supporting pylon rotatable about its longitudinal axis;
pitch variation and reversal means actuating on said aerial propeller;
means for controlling the rotation of said pylon and the azimuth orientation of said aerial propeller;
below the bottom of said floating unit, at least one nautic propeller screw having a substantially horizonal shaft;
pitch variation means actuating on said nautic propeller screw;
a transmission system connecting said aerial propeller shaft to said nautic propeller shaft for transmitting the mechani-

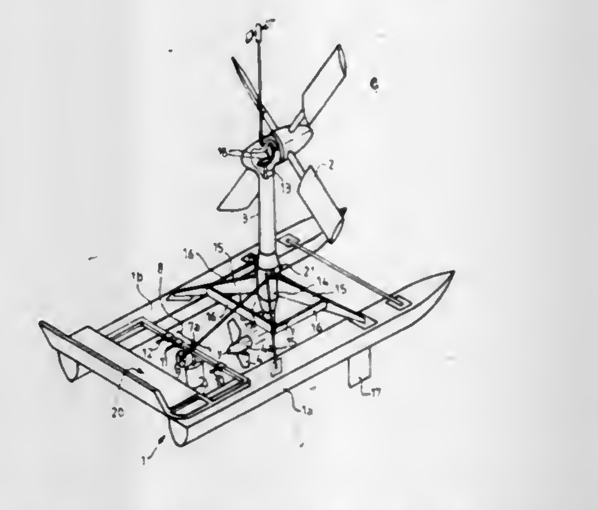

cal energy from said nautic propeller to said aerial propeller or from said aerial propeller to said nautic propeller and including a toruqe conversion means for selecting, during operations, the transmission ratio;
means for reversing the relative rotation direction of said aerial and nautic propellers to facilitate a change of function respectively from an aerogenerator to a propulsive function for said aerial propeller and from a propulsive to an energy collecting turbine function for said nautic propeller;
a directional means for insuring the steering of said floating unit and
control devices comprising means actuating in addition upon said directional means, said azimuth orientation of said aerial propeller and said rotation directions, upon at least two of three variable parameters of said system, namely the pitch of said aerial propeller, the transmission ratio and the pitch of the nautical propeller.

4,371,347
WAVE MOTOR, ESPECIALLY FOR PROPULSION OF BOATS
Einar Jakobsen, Roven, N-1920 Sorumsand, Norway
Filed Apr. 3, 1980, Ser. No. 136,918
Claims priority, application Norway, Apr. 4, 1979, 791132
Int. Cl.³ B63H *19/02*
U.S. Cl. 440—9 **5 Claims**

1. A wave motor for propulsion of a floating device, especially a watercraft, comprising:
a downwards extending supporting structure connected to said craft;
an essentially horizontally disposed, platelike tilting element which, at a forward portion thereof, as viewed in the cruising direction, is pivotally connected to the lower end of said supporting structure, to effect a tilting movement as a result of relative movement between the tilting element and the surrounding water when said craft if raised and lowered due to wave action;

a means being arranged on said supporting structure to limit the tilting movement of said element;

a means enabling said supporting structure to effect an essentially vertical movement in relation to said craft; and

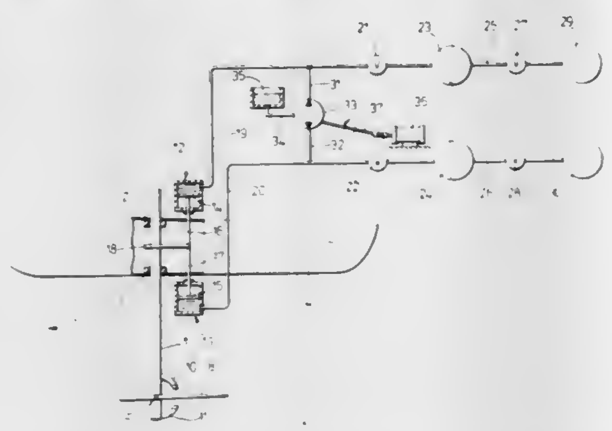

a means to keep said supporting structure in an intermediate position and return it to said position when it has been moved away from said intermediate position by influence of wave forces.

4,371,348
MOUNTING FOR MARINE PROPULSION DEVICE LOCATED AFT OF BOAT TRANSOM
Clarence E. Blanchard, Kenosha, Wis., assignor to Outboard Marine Corporation, Waukegan, Ill.
Filed Sep. 18, 1980, Ser. No. 188,323
Int. Cl.³ B63H *5/12, 21/26*
U.S. Cl. 440—52 **14 Claims**

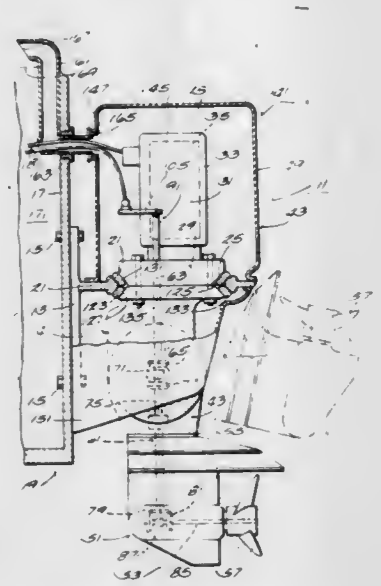

1. A marine propulsion device comprising a bracket adapted to be fixed relative to the transom of a boat, said bracket including an opening extending generally horizontally when said bracket is boat mounted, and a marine propulsion unit including an assembly extending through said opening and being fixed relative to said bracket, said assembly comprising a power head located above said bracket and including an internal combustion engine, and an upper housing located below said bracket, said marine propulsion unit also including a lower housing connected to said upper housing for pivotal movement therebetween about a tilt axis which is horizontal when said bracket is boat mounted, a gear case assembly connected to said lower housing for pivotal movement therebetween about a steering axis which is transverse to said tilt axis, a propeller rotatably carried by said gear case assembly, and a drive train connected to said propeller and said engine and extending through said gear case assembly and said lower and upper housings.

13. A marine propulsion installation comprising a boat hull including a transom, a propulsion device including a lower unit, means adapted to be connected to the transom for supporting said lower unit from the transom for vertical swinging movement about a horizontal axis, and a power head compartment which is located above said lower unit and aft of said transom, and which is substantially closed and has an interior housing an internal combustion engine located above said horizontal axis, and a duct extending through said transom and communicating between the atmosphere forwardly of said transom and the interior of said power head compartment.

4,371,349
TILT MOUNT FOR MOUNTING AN OUTBOARD MOTOR ON THE SIDE OF A CANOE
Howard W. Edwards, 705 24th St., Cloquet, Minn. 55720
Filed Mar. 16, 1981, Ser. No. 244,099
Int. Cl.³ B63H *21/26*
U.S. Cl. 440—56 **9 Claims**

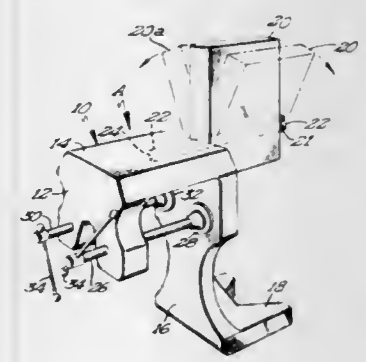

1. A tilt mount for mounting an outboard motor on the side of a canoe or the like comprising, in combination:

(a) a bracket,
(b) means for securing the bracket to a portion of a canoe,
(c) a motor mounting member on which an outboard motor is secured,
(d) means pivotally mounting said motor mounting member on said bracket including:
(A) a pin mounted on said bracket having one end extending from the bracket and a second end extending freely through
(B) a hole formed in said motor mounting member,
(e) said bracket having a stop member extending therefrom and against which a shaft of a motor normally engages when it is secured on said motor mounting member, said motor mounting member and a motor thereon tilting upwardly when the lower portion of the motor strikes an underwater object.

4,371,350
MARINE VESSEL WITH PROPELLER
Claus Kruppa, Berlin, and Wolfgang Wührer, Ravensburg, both of Fed. Rep. of Germany, assignors to Escher Wyss GmbH, Ravensburg, Fed. Rep. of Germany
Filed Sep. 29, 1980, Ser. No. 191,381
Claims priority, application Switzerland, Jan. 28, 1980, 656/80
Int. Cl.³ B63H *5/16*
U.S. Cl. 440—69 **7 Claims**

1. A marine vessel comprising:
a hull having a floor portion;
a tunnel provided at the floor portion of said hull;
at least one propeller which is located essentially throughout approximately one-half of its circumference within said tunnel;
said tunnel extending in the lengthwise direction of said hull;
said tunnel possessing a flow-favorable cross-sectional configuration which follows flow lines of the water;
an adjustable control plate located forwardly of said propeller at a transition region between a surface of the floor portion and said tunnel;

means for adjusting said control plate between a first position and a second position;
said control plate when in said first position merging with the surface of said tunnel and permitting a streamlined shaped flow of the water through said tunnel so that said propeller is substantially fully immersed in the flow of water; and

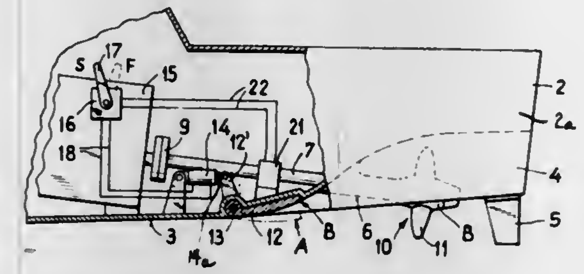

said control plate, when in said second position, being extended and spaced from the surface of the tunnel and causing detachment of the water flow from the surface of the tunnel so that said propeller is only semi-immersed in the flow of water.

4,371,351
MARINE STERN DRIVE COOLER
Gordon Tousey, 1856 Southwood, Muskegon, Mich. 49441
Filed Feb. 9, 1978, Ser. No. 876,345
Int. Cl.³ B63H *5/12*
U.S. Cl. 440—88 **2 Claims**

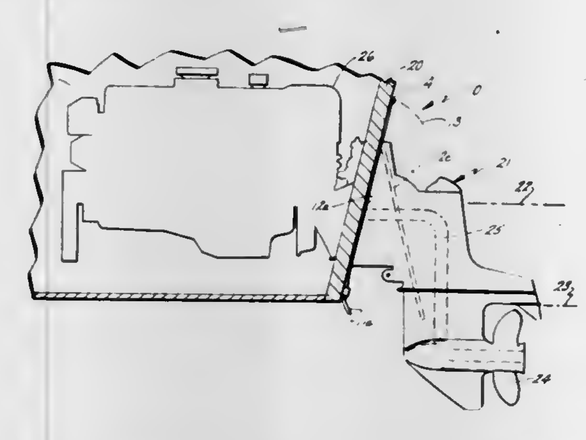

1. A cooling apparatus for supplying cooling water to a marine stern drive for a marine vessel said drive being driven by an inboard motor and contained within a housing including:
a water pickup means, means for mounting the said water pickup means below the level of the bottom of the marine vessel with an opening facing toward the front of the marine vessel for receiving the cooling water as the marine vessel proceeds forwardly;
a water transfer tube means separate and apart from said stern drive and inboard motor and extending upwardly along the transom of the marine vessel to a position above said stern drive, said tube means being connected to said water pickup means for passing the received cooling water generally upwardly to a position substantially above the stern drive; and
dispensing means including an outlet port with said water transfer tube means, said outlet port being located above and directed toward the top of said stern drive for directly passing the cooling water picked up by said water pickup means through said water transfer tube means and over the top of said stern drive housing so that cooling water runs down around the exterior surfaces of said housing for cooling the marine stern drive.

4,371,352
WATER SKI TOW HANDLE
Dennis P. Holland, 3599 Orchard Lake Rd., Orchard Lake, Mich. 48033
Filed Jan. 14, 1981, Ser. No. 225,025
Int. Cl.³ A63C *5/00, 9/00, 11/00, 15/00*
U.S. Cl. 441—69 **10 Claims**

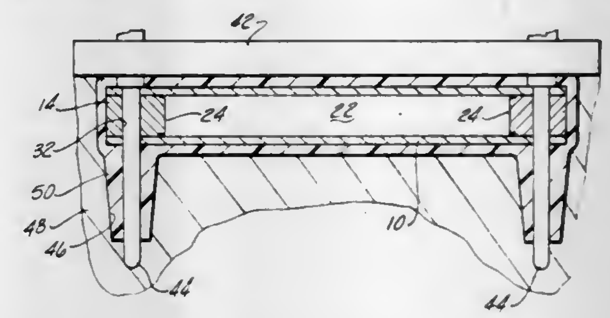

1. A water ski tow handle comprising:
an elongated tubular cylindrical core bar,
a pair of cylindrical plugs, each plug having an outside diameter larger by a predetermined amount than the inside diameter of said core bar, said plugs being press fit into the opposite ends of said core bar so that said plugs sealingly engage the inner bore of the core bar and form a flotation chamber within the core bar,
said core bar including a hole formed transversely through each end and wherein each transverse hole extends diametrically through at least a portion of one of said plugs,
a resilient covering encasing said core bar,
wherein each transverse hole is dimensioned to receive a member therein, and
wherein said core bar is encased with said resilient covering at an elevated temperature and under high pressure conditions, said member securing said plugs against movement with respect to said core bar while said core bar is encased with said resilient covering and being subsequently withdrawn therefrom.

4,371,353
LIFE JACKETS
Peter J. Hume, 19-23 Tennyson St., Wellington, New Zealand
Continuation of Ser. No. 25,106, Mar. 29, 1979, abandoned. This application Apr. 22, 1981, Ser. No. 256,508
Claims priority, application New Zealand, Mar. 31, 1978, 186849
Int. Cl.³ A63C *9/08*
U.S. Cl. 441—117 **6 Claims**

1. A non-inflatable life jacket comprising a continuous length of buoyant material which is substantially conformable to the shape of the wearer which when unconformed includes substantially centrally of the longitudinal length thereof an integral offset arced region configured to allow the same to deform and be conformed to encompass the nape and sides of the wearer's neck with the end regions of said buoyant material extending alongside each other down at least the wearer's chest to form front portions, said arced region being formed by an inner concave curve and an outer convex curve, said curves being substantially semicircular and having substantially the same radius, said end regions being substantially rectangular in shape and substantially aligned in the unconformed position, said inner concave curve being substantially tangential to the

plane including the edges of said end regions at which said outer convex curve terminates,

means to retain said buoyant material substantially in the conformed condition for wearing, and

means to hold said buoyant material to the wearer so as in use to support his weight comprising means encircling the wearer's back which holds said end regions to his front.

4,371,354

CONTROLLED-TORQUE APPARATUS

John A. McKean, Fairview, Pa., assignor to Titan Tool Co., Fairview, Pa.

Filed Dec. 29, 1980, Ser. No. 221,322

Int. Cl.³ F16D *3/56*

U.S. Cl. 464—36 **7 Claims**

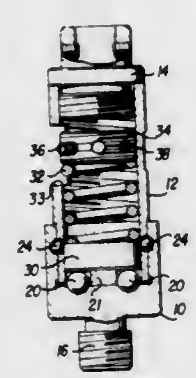

1. A controlled torque apparatus comprising:

a first substantially cylindrical member having an open end, a closed end and a sidewall;

a second substantially cylindrical member having a closed end and a sidewall, the closed end of said second cylindrical member fitting within the open end of said first cylindrical member;

torque overload-responsive clutch means interposed between said first and second cylindrical members;

means for securing said second cylindrical member within said first cylindrical member, said securing means connecting said first cylindrical member to said second cylindrical member so that said first cylindrical member is longitudinally fixedly secured to said second cylindrical member but rotatable relative thereto and comprises:

an aperture through the sidewall of said second cylindrical member;

a ball bearing disposed in said aperture, the sidewall of said second cylindrical member having a thickness less than the diameter of the ball beaing;

an annular bearing race formed on the inner surface of the sidewall of said first cylindrical member corresponding to said aperture; and

ball bearing retaining means located within said second cylinder to retain said ball bearing in said aperture.

4,371,355

FLEXIBLE AND BACKLASH FREE ROTARY STEM COUPLING

Hans D. Baumann, P.O. Box 471, Rye, N.H. 03870

Filed Nov. 28, 1980, Ser. No. 211,046

Int. Cl.³ F16D *3/52*

U.S. Cl. 464—101 **2 Claims**

1. Flexible and backlash free rotary stem coupling consisting of a semi-circular metal strip having flattened flange-like terminating ends, each of these flange-like terminating ends having openings that accomodate fasteners suitable to force each of the flange-like portions towards each other and thereby causing a clamping action against flattened stems, the portion of the semi-circular metal strip lying opposite and between said flange-like configurations has a pierced opening, said flange-like portions being separated by a wedge-like gap when the fastening devices are disengaged and being capable of assuming a parallel separation from each other upon tightening of said fasteners and following a deformation of the semi-circular metal strip, and wherein such deformation of the semi-circular

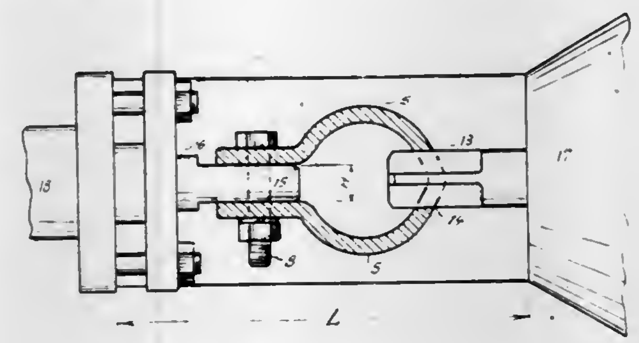

metal strip is capable of simultaneously reducing the size of the pierced opening to cause gripping action around shafts or rotating stems.

4,371,356

SLIDING UNIVERSAL JOINTS, PARTICULARLY FOR AUTOMOBILE TRANSMISSIONS

Jacques P. Dore, Colombes, France, assignor to Automobiles Peugeot and Automobiles Citroen S.A., both of Velizy, France

Filed Apr. 8, 1980, Ser. No. 138,437

Claims priority, application France, Apr. 12, 1979, 79 09277

Int. Cl.³ F16D *3/26*

U.S. Cl. 464—111 **9 Claims**

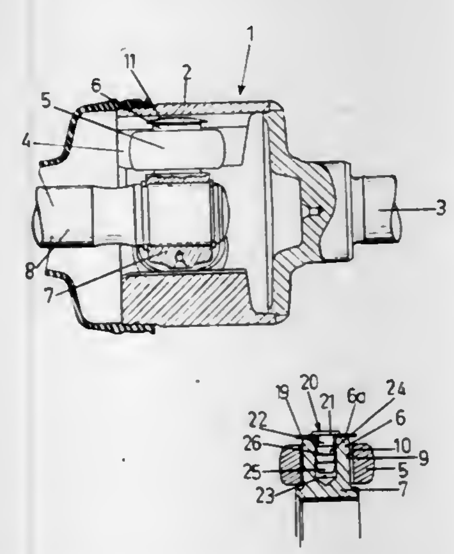

1. A sliding universal joint, particularly for automobile transmissions, comprising a driving element essentially in the form of a socket connected to a driving shaft, said socket having at least two roller tracks composed respectively of two cylindrical grooves, at least two rollers of partial spherical curvature mounted by their bores on trunnion pins of a hub connected to a driven shaft, said rollers being axially slidable on said pins and engaging in said tracks, and means for preventing said rollers from sliding off the trunnion pins during assembly of the universal joint, and for permitting said rollers to slide on the trunnion pins after assembly of the joint, said means comprising friction means tightly frictionally gripping each trunnion pin against displacement of the friction means by centrifugal force during rotation of the universal joint and abutment means supported by said friction means in spaced relation to an outside end of each roller, and engageable by the roller, to prevent the roller from sliding off its trunnion pin during assembly of the universal joint.

4,371,357

UNIVERSAL JOINT

Miloslav Petrzelka, Much-Kranüchel, and Werner Krude, Sieg-burg-Kaldauen, both of Fed. Rep. of Germany, assignors to Uni-Cardan AG, Siegburg, Fed. Rep. of Germany

Filed Jun. 25, 1980, Ser. No. 162,741

Claims priority, application Fed. Rep. of Germany, Aug. 28, 1979, 2934630

Int. Cl.³ F16D *3/26*

U.S. Cl. 464—128 **2 Claims**

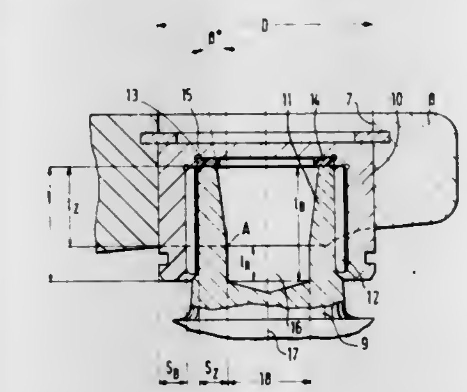

1. In a universal joint including yoke means having yoke bore means, trunnion cross means including generally cylindrical trunnion means operatively supported in said yoke bore means and defining a generally centrally disposed axis thereof, bearing bush means interposed within said yoke bore means between said trunnion means and said yoke means and means defining a bore extending into said trunnion means from an end face thereof in generally coaxial relationship with said axis, the improvement comprising that said trunnion means has a wall thickness S_Z surrounding said bore, that said bearing bush means has a wall thickness S_B surrounding said trunnion means, that said wall thickness S_Z is at least equal to the wall thickness S_B but smaller than triple the wall thickness S_B, that said bearing bush means is formed with a cylindrical inner surface having a depth 1 within which said trunnion means is received, that said bore in said trunnion means is formed with a depth 1_B which is at least as large as said depth 1, that said bore is formed with a conical wall portion extending to said end face of said trunnion means, and that said conical wall portion extends at an angle β relative to said axis, said angle β being at least 0.5° but smaller than 5°.

4,371,358

UNIVERSAL JOINT AND METHOD OF MAKING

Charles E. Laue, Wilmette, Ill., assignor to Hamilton-Pax, Inc., Chicago, Ill.

Filed Jun. 13, 1980, Ser. No. 159,211

Int. Cl.³ F16D *3/26*

U.S. Cl. 464—136 **6 Claims**

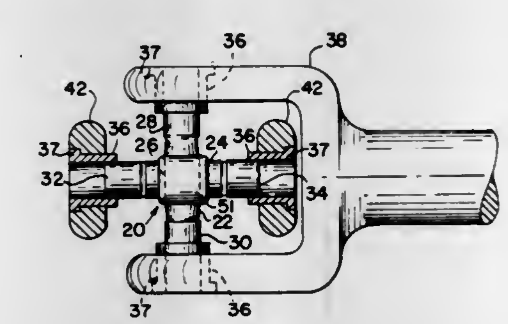

1. In a universal joint, an elongated, steel female member having a cylindrical central portion with a transverse cylindrical hole extending therethrough, said member having smaller-diameter cylindrical end portions coaxial with said central portion, said end portions being harder than said central portion and being finished to define smooth bearings, an elongated, steel male member with a central cylindrical portion complementary to and having a tight fit in said hole to define with said female member a cruciform spider consisting solely of said members, said male member having hardened cylindrical end portions finished to define smooth bearings coaxial with the central portion of the male member, the axis of the female member bearings being substantially normal to the axis of the male member bearings, said central portion of the female member being more ductile than its end portions to avoid cracking said central portion of the female member as the central portion of the male member is tightly fitted into said hole.

4,371,359

UNIVERSAL JOINT

Michael J. Brennan, Lake Orion, Mich., assignor to Ex-Cell-O Corporation, Troy, Mich.

Filed Dec. 15, 1980, Ser. No. 216,396

Int. Cl.³ F16D *3/26*

U.S. Cl. 464—136 **3 Claims**

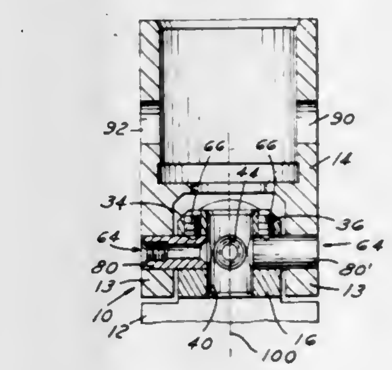

1. In a universal joint, the combination of opposite bifurcated joint members, each of said bifurcated joint members having a bore therethrough, a joint block having a plurality of extended bores in the sides of said block 90 degrees from each adjacent extended bore and intersecting the centerlines of each adjacent extended bore, a plurality of bores threaded from the top surface portion of said block to said extended bores, a pin mounted in each of said bores extending through said bores of said bifurcated joint members and through said extended bores of said block and a set screw threaded into each of said top bores to maintain a locking relationship with each of said pins mounted in each extended bore, each said pin having a longitudinal bore therethrough with a threaded portion to threadably receive a screw for joint disassembly by punching the screw instead of the pin with the associated set screw unlocked.

4,371,360

LOCKING MECHANISM IN TENSION PROVIDING DEVICE

Juji Ojima, Ebina, and Koichi Yamamuro, Hatano, both of Japan, assignors to NHK Spring Co., Ltd., Yokohama, Japan

Filed Oct. 10, 1980, Ser. No. 195,763

Claims priority, application Japan, Oct. 12, 1980, 54-131570

Int. Cl.³ F16H *7/08;* **F01L** *1/00*

U.S. Cl. 474—111 **2 Claims**

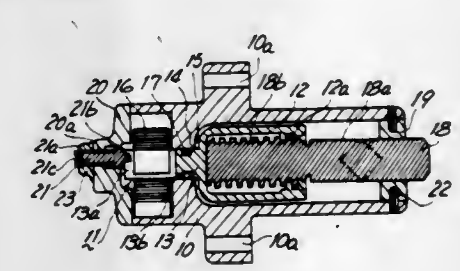

1. In a tension providing device wherein a first shaft is

threadedly engaged with a second shaft and a rotation force of said first shaft is changed to a pushing force in an axial direction of the second shaft, a locking mechanism for preventing rotation of said first shaft which comprises:
- a slit groove formed at an axial end of said first shaft facing away from said second shaft;
- casing means encompassing said end of said first shaft facing away from said second shaft;
- lid means for covering a portion of said casing means including the axial end having a slit groove of said first shaft, said lid means having a threaded hole extending therethrough at a position eccentric from the axial center of said first shaft; and
- a stopper pin removably insertable into said slit groove at a position eccentric from the axial center of said end, said stopper pin having a control portion formed at one end, a projected portion for prevention of slipping out thereof which protrudes to the side formed at another end of said stopper pin, and a threaded portion extending between said control portion and said projected portion, said control portion being positioned outside of said casing, said threaded portion being engaged with said threaded hole of said lid, and said projected portion being inside of the casing, said another end of said stopper pin being engageable with said slit groove of the first shaft at the position eccentric from the axial center by operation of the control portion.

4,371,361

METAL BELT FOR DRIVE TRANSMISSION

Dante Giacosa, Turin, Italy, assignor to Fiat Auto S.p.A., Turin, Italy

Filed Oct. 10, 1980, Ser. No. 195,804

Int. Cl.³ F16G *5/16*

U.S. Cl. 474—201 **6 Claims**

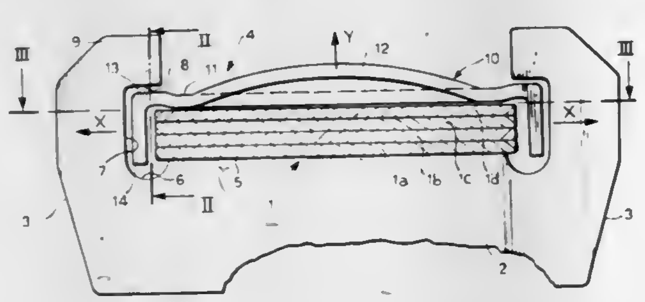

1. A continuous metal belt for drive transmission between V-groove pulleys, comprising:
- a flexible loop constituted by at least one metal band and acting as a guide, and
- a plurality of V-shaped blocks lodged on said loop and having respective recesses in which the loop is engaged, said blocks being slidable longitudinally on said loop to transmit the drive, wherein the improvement consists in:
- said recess of each said block being defined by two lateral guide walls having free edges, said free edges being provided with respective retaining projections having active surfaces facing said band, and
- a plurality of channel elements being arranged with their bottoms extending between said band and said active surfaces, and their sides between said lateral guide walls and respective edges of said band.

4,371,362

TRACK ROLLER SYSTEM

F. Hoyt Dorris, 516 Rocky Point Rd., Cordova, Tenn. 38018

Filed Apr. 2, 1980, Ser. No. 136,680

Int. Cl.³ B62D *55/14;* **B60B** *7/04*

U.S. Cl. 474—198 **5 Claims**

1. A track roller for an endless track vehicle, the roller comprising:

(a) a hub having a longitudinal axis of rotation, a central outer surface area, and opposite axial end areas;
(b) hub locking surfaces at each hub end area, said hub locking surfaces extending generally radially outwardly from the hub central outer surface area;
(c) a replaceable rim assembly on the hub, the assembly comprising two groups of arcuate rim segments axially spaced on the hub, each segment having axially and radially extending side faces, the segments of each group forming an annular track roller rim half when joined together about the hub with said faces adjacent or abutting each other;
(d) said rim segments having interior surfaces adapted to lie adjacent the hub outer surface, said interior surface including axially spaced inner and outer surface portions, said inner surface portions corresponding in shape to and adapted to fit over the hub central outer surface area, and said outer surface portions including generally radially outwardly extending rim locking surfaces adapted to engage said hub locking surfaces to provide an interference fit between said locking surfaces for preventing axial

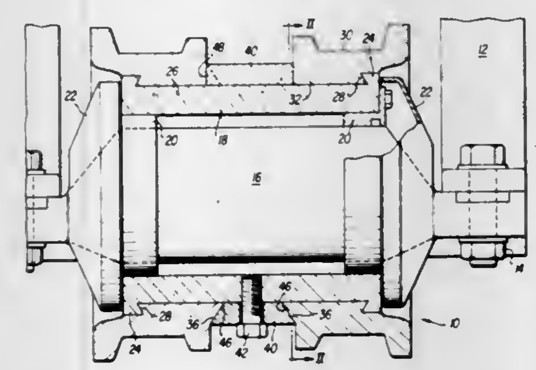

outward movement of each assembled track roller rim segment with respect to the hub, said rim segments including generally radially extending inner end faces, and said hub and rim locking surfaces also extending in a generally axial direction towards the central section of said hub; and
(e) a removable retainer means arranged to fasten at least the ends of said rim segments opposite said rim locking surfaces relative to the hub and comprising a plurality of segments located within and spanning the axial space along the hub between said rim assemblies, and said retainer means including generally radially extending end surfaces that engage said inner end faces of said rim segments, said inner end faces of said rim segments and said end surfaces of said retaining means defining cam and follower surfaces;
(f) removable fastener means for securing the retaining means relative to the hub;
(g) said cam follower surfaces arranged to urge axially opposite rim segments axially apart towards said hub end areas when said removable fastening means is secured; and
(h) rotation preventing key means for locking said rim segments against rotation relative to said hub.

4,371,363

TOOTHED BELT

Mario Cicognani, Milan; Giorgio Tangorra, and Gianfranco Cimatti, both of Monza, all of Italy, assignors to Industrie Pirelli S.p.A., Milan, Italy

Filed May 14, 1980, Ser. No. 149,157

Claims priority, application Italy, May 25, 1979, 22973 A/79

Int. Cl.³ F16G *1/28*

U.S. Cl. 474—205 **7 Claims**

1. A toothed belt for meshing with a toothed pulley of a power transmission system comprising: an endless elastomeric or plastic tape, a plurality of parallel and coplanar cords embedded in the tape and disposed along the larger dimension of the tape, and a toothing on at least one face of said tape, the said toothing being formed by a plurality of teeth, separated

one from the other by hollow spaces, characterized by the fact that the profile of each tooth is a curve defined by the trigonometric tangent of the angles formed between the straight lines tangent to the curve and the straight line parallel to the tooth base that increase linearly from the tooth top towards the tooth base, and according to a constant coefficient (K) that is a function of the mechanical characteristic of the material forming the tooth and of the dimensions of the tooth calculated from the formula:

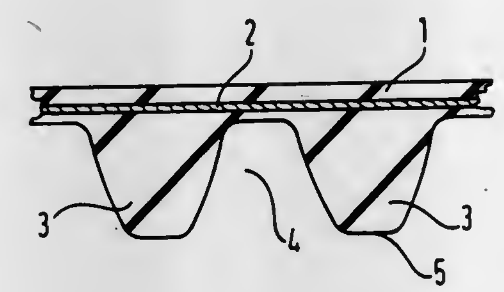

$$K=32h/(A+4\delta)^2$$

where:
- K is the coefficient constant;
- A is the width of th tooth base;
- h is the height of the tooth;
- δ is a coefficient as a function of the maximum admissible shearing stresses of the material forming the tooth and of the average modulus of the shear stresses of the material that constitutes the tooth.

4,371,364

METHOD FOR THE MANUFACTURE OF A PRINTED, PRE-CREASED PACKING MATERIAL WEB PROVIDED WITH OPENING INDICATION

Hans A. Rausing, Lund, Sweden, assignor to Tetra Pak International AB, Lund, Sweden

Filed Sep. 18, 1980, Ser. No. 188,469

Claims priority, application Sweden, Sep. 26, 1979, 7907976

Int. Cl.³ B31B *1/18, 1/88*

U.S. Cl. 493—7 **5 Claims**

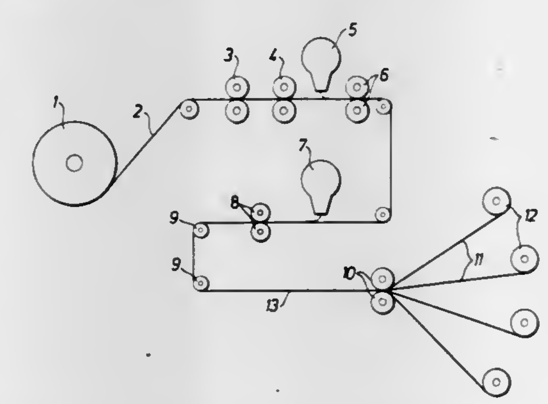

1. A method for the manufacture of a packing material web, comprising the steps of providing a first web of a base layer material having a width which is a multiple of the width of said packing material web with a crease-line pattern for facilitating folding of said packing material web into packages, providing perforations adapted to form emptying openings on the packages manufactured from the packing material web, printing guiding marks consisting of markings printed in a dark color and adapted to be sensed by photoelectric arrangements onto said first web during the impression of the crease-line pattern, said guiding marks in number and in location being arranged such that each portion of the width of the first web that constitutes a single partial web receives corresponding guiding marks, coating said first web, after the crease-line pattern and perforations have been provided, on both sides with thermoplastic material, cutting the first web thus coated with thermoplastic material in a longitudinal direction to form a number of separate partial webs, each of the partial webs having a width corresponding to the width of at least one of the desired packing material webs, subsequently separately providing each of the partial webs in separate printing operations with decoration and text, controlling the printing operations by reference to the guiding marks, operating the printing operations at a substantially slower speed than the other operations, and rolling the printed webs into magazine rolls of a predetermined size.

4,371,365

APPARATUS FOR FITTING AND STACKING BAGS ONTO PINS

Hiromichi Shingo, Yokohama, Japan, assignor to Toyo Shokuhinkikai Kabushiki Kaisha, Yokohama, Japan

Filed Aug. 11, 1980, Ser. No. 176,644

Claims priority, application Japan, Aug. 31, 1979, 54/111251

Int. Cl.³ B31B *1/98*

U.S. Cl. 493—25 **5 Claims**

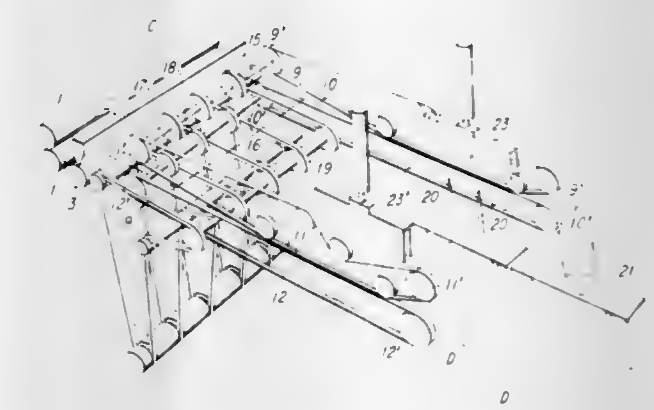

1. An apparatus for fitting and stacking bags on pins, comprising:
- a pair of upper and lower feed rollers for gripping and intermittently feeding a film folded double to leave a lip portion having a pair of holes therein;
- a sealing knife and a sealing roller disposed opposing each other on the front side of the front portions of said feed rollers and for quickly sealing and cutting said doubled film at the regular intervals between the intermittent feed motion of said feed rollers, and thereby forming bags in regular sequence;
- two pairs of pick-off belts, each pair consisting of upper and lower belts, one pair of said belts being extended forward from positions in front of one end portion of said sealing knife and sealing roller, the other pair of said belts being extended forward from positions in front of the other end portion of said sealing knife and sealing roller, said two pairs of belts being so disposed as to grip both end portions of the bag;
- an intermittent driving means for stopping said pick-off belts when the bag is being gripped thereby at starting end portions thereof and when the bag in a gripped state has been fed to terminal end portions thereof;
- means for raising the starting end portions of said upper pick-off belts when the bags are fed;
- a pair of pushers provided on the inner side of the terminal end portions of said two pairs of upper and lower pick-off belts, for releasing the bag from said belts;
- a pair of wicket pins, positioned under the one of said pushers that is on the side of the lip of the bag, on which the paired holes in the lip of the bag may be fitted;
- an intermittent transfer means for transferring said wicket pins when a predetermined number of bags have been stacked thereon;
- first regulator means for adjusting the relative positions of

said wicket pins and the holes in the lip of the bags in the direction normal to the bag-feeding direction, in the plane of the bags, automatically as the bags are advancing;

second regulator means for adjusting the relative positions of said wicket pins and the holes in the lips of the bags in the bag-feeding direction while the apparatus is in operation.

4,371,366

METHOD FOR MAKING A PRODUCE TRAY

Thomas E. Bower, Long Beach, Calif., and John J. Aust, Toledo, Ohio, assignors to Owens-Illinois, Inc., Toledo, Ohio

Filed Dec. 22, 1980, Ser. No. 219,005

Int. Cl.[3] B65P *5/36*

U.S. Cl. 493—138 **3 Claims**

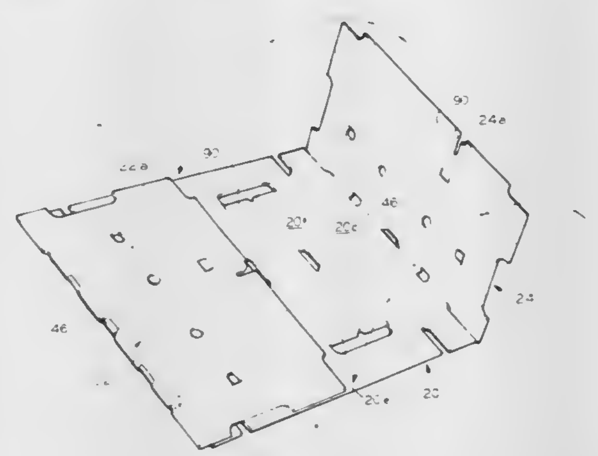

1. A method for forming a one piece two-tray open top container for produce and the like from a single layer rectangular blank of corrugated board, including the steps of:

dividing the rectangular blank by two transverse fold lines into a central section extending one half the length of the rectangular blank and having four transversely extending central panels, and two end sections each extending approximately one quarter of the length of the blank and each including one transversely extending end panel;

folding the end sections on such fold lines into flat abutting relationship with the central section, thereby bringing the terminal edges of the end sections into parallel proximity adjacent the center of the central section, and bringing each end panel into surface abutting relationship with one of said central panels;

glueing each of said end panels to the abutting central panel; and

folding the two glued pairs of said end panels and said central panels into surface abutting relationship, thereby forming a quadruple layer central divider panel extending between said central section and said end sections with said central and end sections respectively forming a top wall and a bottom wall of the container.

4,371,367

APPARATUS FOR PULLING OPEN TUBE SECTIONS TO FORM BASE SQUARES IN THE PRODUCTION OF CROSS-BOTTOM SACKS

Fritz Achelpohl, Lengerich, and Werner Decker, Ladbergen, both of Fed. Rep. of Germany, assignors to Windmoller & Holscher, Lengerich, Fed. Rep. of Germany

Filed Jul. 24, 1980, Ser. No. 171,803

Claims priority, application Fed. Rep. of Germany, Aug. 3, 1979, 2931607

Int. Cl.[3] B31B *1/52, 1/80*

U.S. Cl. 493—256 **17 Claims**

1. Apparatus for pulling open elongated flexible tube sections in the production of cross-bottom sacks to form base squares having folded edges and corner squares, said apparatus comprising:

a table plate with opposed sides and a central slot for guiding and holding said tube section, said tube section projecting beyond said central slot to provide a margin of sufficient length for forming said base squares;

suction means which initially pull open one end of said tube section and then hold said tube section in a pre-opened position;

first and second grippers centrally located between the

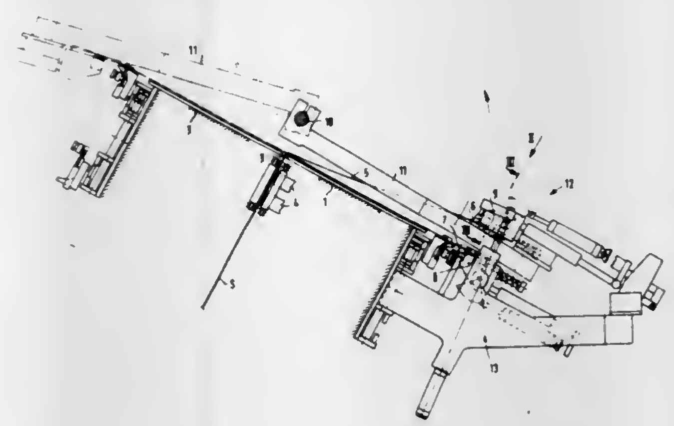

opposed ends of said tube section, said first gripper being secured to said apparatus frame and said second gripper being secured to a pivotable structure, said pivotable structure being pivoted to said apparatus frame and being provided with a power means for swinging said pivotable structure through approximately 180° between the opposed sides of said table plate.

4,371,368

METHOD AND APPARATUS FOR THE MANUFACTURE OF FUSECORD

Robert M. Aitken, Stevenston, Scotland, assignor to Imperial Chemical Industries Limited, London, England

Filed Jan. 7, 1980, Ser. No. 109,903

Claims priority, application United Kingdom, Jan. 24, 1979, 7902492

Int. Cl.[3] C06C *5/08*

U.S. Cl. 493—298 **7 Claims**

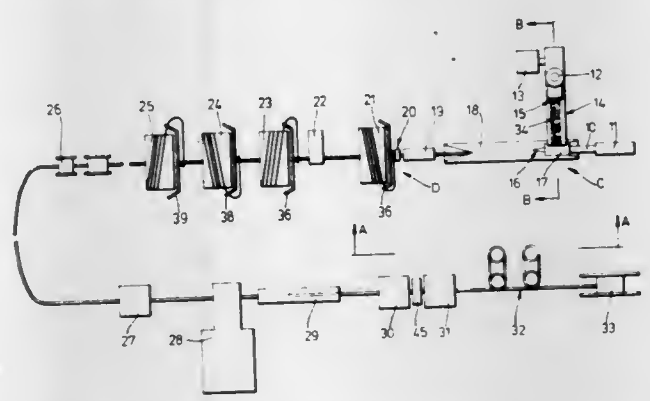

1. A method of helically spinning stranded reinforcing wrapping material on explosive fusecord comprising continuously advancing an encased fusecord core along a horizontal path axially through a plurality of supply reels on each of which wrapping material is wound coaxially with said horizontal path, said reels being spaced apart and freely mounted for rotation about a common axis, and training at least one strand of wrapping material from each reel helically around the said encased fusecord core by engaging the strand with a flyer rotatable around the encased fusecord and rotatably driving the flyer and the reel at the respective rotational speeds required to wrap the desired amount of wrapping material on the advancing fusecord.

4,371,369

AUTOMATIC REGISTER SYSTEM FOR DIE CUTTING OPERATIONS

Vester L. Wright, III, Indianapolis, Ind., assignor to Franklin Corrugated Design, Inc., Franklin, Ind.

Filed Apr. 25, 1980, Ser. No. 143,920

Int. Cl.[3] B31B *1/74*

U.S. Cl. 493—373 **9 Claims**

1. A stripping assembly for in-line stripping apparatus of stripping stations in die cutting systems comprising:

a stripping die including a generally planar mounting member and waste stripper means on said mounting member;

a template including a planar member shaped to provide support for non-scrap areas of a work piece to be stripped; and

fastener means retaining the mounting member and template in alignment when the assembly is separate from the stripping station of the system;

said stripper means including stripper blocks secured to said template, and said fastener means including:

a plurality of lock-up plates secured to said stripper means and said template; and

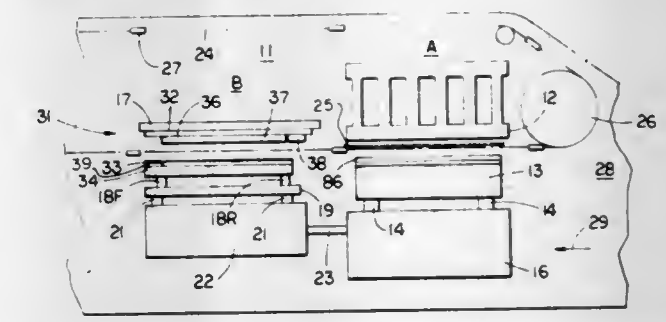

means securing said lock-up plates to said stripper means and said template.

4,371,370

OXIDATION HAIR DYES COMPRISING BIS-(2,4-DIAMINOPHENOXY)-ALKANOLS AS COUPLING COMPONENTS

David Rose, Hilden; Hinrich Möller, Düsseldorf, and Norbert Maak, Neuss, all of Fed. Rep. of Germany, assignors to Henkel Kommanditgesellschaft auf Aktien, Düsseldorf-Holthausen, Fed. Rep. of Germany

Filed Mar. 4, 1981, Ser. No. 240,393

Claims priority, application Fed. Rep. of Germany, Mar. 22, 1980, 3011191

Int. Cl.^{3} A61K *7/13;* **C07C** *93/14*

U.S. Cl. 8—408 **7 Claims**

1. A compound of the formula

where R is selected from the group consisting of the radicals

or a salt thereof with an inorganic or organic acid.

2. A composition of the developer-coupler type for the dyeing of the hair, consisting essentially of a carrier, at least one compound of claim 1, as coupling component, and, as developer component, one or more oxidative dye developer components, said coupler and said developer being present in a molar ratio of from about 2:1 to 1:2.

4,371,371

PROCESS FOR DYEING TEXTILE MATERIALS IN SOLID SHADES

Joseph J. Smrekar, LaGrange, Ga., assignor to Milliken Research Corporation, Spartanburg, S.C.

Filed Jun. 15, 1981, Ser. No. 273,369

Int. Cl.^{3} D06P *3/82;* **D06B** *1/02*

U.S. Cl. 8—531 **9 Claims**

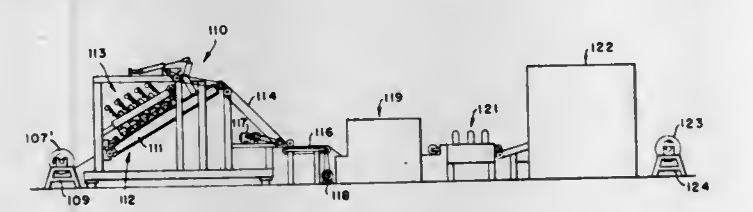

1. A process for dyeing textile materials in a solid shade with a jet injection dyeing apparatus, including conveying means for transporting the textile, jet orifices for delivering dye to said textile material, and control means for supplying data to control the operation of the application of dye from the jet orifices to the textile material, which comprises the steps of: modifying the textile material prior to dyeing of same by applying to said textile material an aqueous admixture containing an effective minor amount of a thickening agent to maintain the viscosity of said aqueous admixture at from about 150 to about 750 centipoises to thoroughly wet said textile material; dyeing said textile material in a solid shade with an acid dye composition having a viscosity of from about 150 to about 750 centipoises by applying said dye composition by means of said jet dyeing apparatus in an amount of at least about 300 percent based on the weight of said textile material; the pH of the textile material at the point of contact between said dye-composition and said textile material being maintained at from about 3.5 to about 7.5, fixing said dye on said textile material, washing said textile material to remove any unfixed dye, and recovering a resulting textile material dyed in a solid shade.

4,371,372

SIMULTANEOUS DE-SIZING AND REACTIVE DYEING OF CELLULOSE TEXTILES

Karl-Heinz Weible, Aesch, Switzerland, assignor to Sandoz Ltd., Basel, Switzerland

Filed Jun. 29, 1981, Ser. No. 278,210

Int. Cl.^{3} D06P *1/44, 3/66*

U.S. Cl. 8—543 **11 Claims**

1. A process which comprises the steps of (1) applying a cold-dyeing reactive dye and, as de-sizing agent, a bacterial α-amylase to a cellulose textile material at least some of whose fibers have been treated with a starch-based size, said α-amylase having significant activity at pH values above 8.5 and at temperatures below 30° C. and (2) subjecting the thus-treated material to the cold-dwell process until sufficient fixation of the dye has been achieved, whereby simultaneous de-sizing and reactive dyeing of the material is effected.

4,371,373

CHLORIDE OXIDATION OF DYES IN VAT AND SULFUR DYED TEXTILES

Jean Balland, Chateaurenault, France, assignor to Manufacture de Produits Chimiques Protex, Paris, France

Filed Jan. 3, 1979, Ser. No. 784

Int. Cl.^{3} D06P *1/24, 1/30, 5/00*

U.S. Cl. 8—650 **10 Claims**

1. In a process of oxidation of a dyeing made by application to textiles of a vat or sulfur dye in reduced form with sodium chlorite, the improvement wherein a chelating agent which prevents the release of chlorine or chlorine compounds is added to the chlorite bath and said oxidation is carried out in an acid medium at a pH of 3.5–6.5 and a temperature of 0°–90° C., said chelating agent being an amino polycarboxylic acid salt or an hydroxyalkane phosphonic acid salt.

4,371,374

MONITORING METABOLIC CONTROL IN DIABETIC PATIENTS BY MEASURING GLYCOSYLATED AMINO ACIDS AND PEPTIDES IN URINE

Anthony Cerami, Flanders, N.J.; Michael Brownlee, and Helen Vlassara, both of New York, N.Y., assignors to The Rockefeller University, New York, N.Y.

Filed Nov. 17, 1980, Ser. No. 207,471

Int. Cl.^{3} G01N *33/50*

U.S. Cl. 23—230 B **26 Claims**

1. A method of monitoring blood glucose integrated over a period of time from about one week to about one month, separating and quantitating non-enzymatic glycosylated amino acids, peptides or mixtures thereof present in the patient's urine, comprising:

(a) treating a urine sample containing said non-enzymatic glycosylated amino acids, peptides or mixtures thereof with a suitable boronic acid to form a complex of said non-enzymatic glycosylated amino acids, peptides or mixtures thereof with said boronic acid;

(b) separating the so-formed complex from said urine; and

(c) analyzing the separated complexed material to establish the presence and amount of amino acids, peptides or mixtures thereof to obtain the complexed non-enzymatically

glycosylated amino acid content of the urine, which content provides an indicia of blood glucose integrated over a period of time from about one week to about one month.

13. A test kit for the colorimetric determination of nonenzymatically glycosylated amino acids and/or peptides in a urine sample, comprising:

(a) a predetermined amount of an insolubilized suitable boronic acid;
(b) a predetermined amount of a color dye reactive with amino acids by attachment of the dye to said nonenzymatic glycosylated amino acids and/or peptides, whereby (a) and (b) are separated from one another by being placed in separate containers; and
(c) previously prepared standards for colorimetric comparison.

4,371,375

APPARATUS AND PROCESS FOR DRYING SAWDUST

Silas P. Dennis, Jr., and Tony M. Dennis, both of P.O. Box 279, Albemarle, N.C. 28001

Filed Nov. 17, 1981, Ser. No. 322,179

Int. Cl.[3] C10L *9/08;* F26B *5/04*

U.S. Cl. 44—2 16 Claims

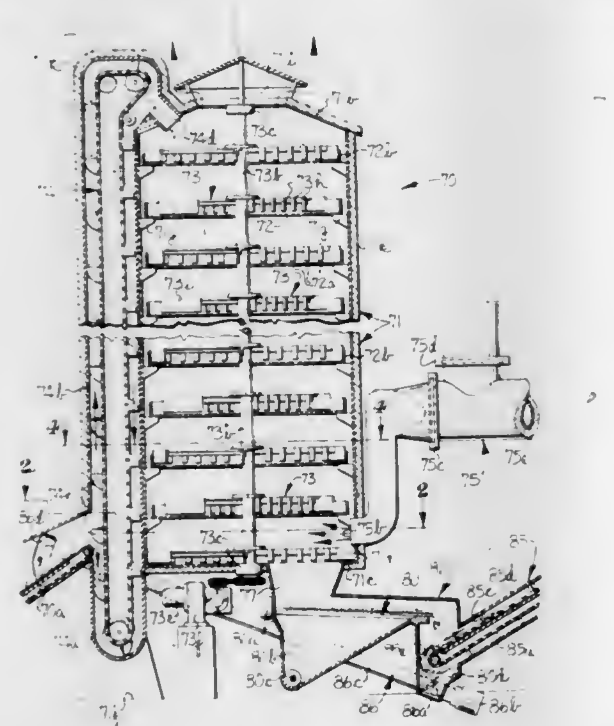

1. A dryer apparatus for converting sawdust into a dry, highly combustible wood fiber fuel comprising an upright housing having a plurality of vertically spaced horizontal metal dryer plates therein, each of said plates having spaced-apart openings therein through which sawdust introduced at the top of the housing may successively pass downwardly to and through the plates, said openings in adjacent plates being staggered relative to each other so that the sawdust from one plate may not drop down through an opening thereof directly into an opening of the next lower plate whereby the sawdust moves downwardly in a sinuous path through the upright housing, said dryer apparatus further comprising:

upright rim means formed at peripheral portions of each of said dryer plates for preventing the sawdust from moving outwardly off of the plates,
sawdust agitator means associated with the respective dryer plates and comprising
rotating arms rotatable on a vertical axis and extending outwardly in overlying relation to each of the respective plates,
teeth means extending from the arms and terminating in close relationship to the underlying plate and serving for agitating the sawdust for enhancement of the drying thereof, and
plow means carried by the outer end portion of at least certain arms associated with at least certain plates for engagingly deflecting sawdust resting on the respective underlying plates toward the axis of the arms to overcome the outward migration imparted to the sawdust by the teeth and to further enhance the drying of the sawdust, said plow means comprising an elongate member having an outward leading end positioned inwardly of and closely adjacent said rim means and extending inwardly therefrom a predetermined distance to a trailing end, said plow means elongate member being angularly disposed with respect to said associated arm at an angle effective to deflect the sawdust inwardly,
means for permitting introduction of hot dry air into the dryer adjacent the lowermost dryer plate so that at least a substantial portion of the air may then flow upwardly through said staggered openings in the plates in a sinuous manner, and
well means provided below said lowermost plate and in which the dried sawdust is received.

4,371,376

CONSOLIDATION OF SLURRIES OF SOLID PARTICULATE MATERIALS

Perry J. Dick, Jr., Pittsburgh, Pa., assignor to Norwood Minerals, Inc., Pittsburgh, Pa.

Filed Jun. 17, 1981, Ser. No. 274,540

Int. Cl.[3] C10L *5/02, 5/00;* B01D *33/00*

U.S. Cl. 44—10 R 39 Claims

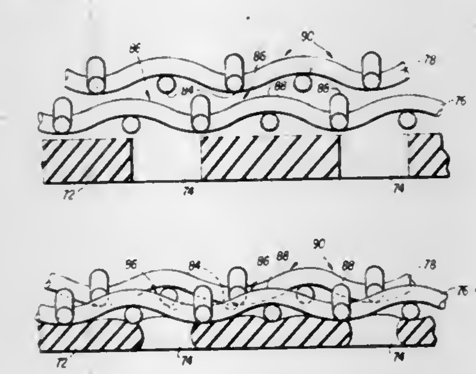

21. A process for removing the liquid from a slurry of solid particulate material and for consolidating the particulate material into a shape-retaining slug, comprising

(a) placing a charge of said slurry in an enclosed consolidation chamber provided with drainage means for escape of the liquid from the chamber,
(b) interposing a porous structure between said slurry and said drainage means, said porous structure comprising
(i) a sheet of elastic material having a plurality of holes therethrough, wherein said sheet is disposed in said chamber so that the holes through said sheet communicate with said drainage means, and
(ii) two woven wire screens having the same plain weave and same mesh size, wherein one of said screens is disposed adjacent to said sheet of elastic material, and wherein said screens are disposed relative to each other so that when compressive stress is applied to the slurry in said chamber, the two screens are forced together against said sheet of elastic material so that the portions of the woven wires of one screen which face the other screen at the points where the wires of the first screen cross intimately engage the openings through the other screen,
(c) applying compressive stress to said slurry in said chamber, thereby causing said screens to intimately engage, removing liquid from said slurry through said drainage means, and consolidating said slurry into a slug.

22. The process of claim **21** wherein the two screens have a mesh size between about 300 mesh and about ¼ inch (U.S. Standard Sieve Series).

23. The process of claim **22** wherein said slurry is a slurry of coal and the two screens have a mesh size between about 28 mesh and about 150 mesh (U.S. Standard Sieve Series).

4,371,377

FUEL ADDITIVE

Theodore Weinberger, Charlotte, N.C., assignor to Adriel Energy Corporation, McLean, Va.

Filed Nov. 26, 1980, Ser. No. 210,601

Int. Cl.[3] C10L *1/02*

U.S. Cl. 44—56 13 Claims

1. A gasoline additive mixture consisting essentially of alcohol mixed with from about 3 to about 10 percent, based on the volume of said alcohol, a ketone having the general formula

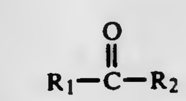

wherein R_1 and R_2, which may be the same or different, are each an alkyl of 1 to 4 carbon atoms, and from about 0.3 to about 1.5 grams per gallon of said additive mixture of an alkali metal carbonate in finely divided form.

4,371,378

SWIRL BURNER FOR PARTIAL OXIDATION PROCESS

Albert Brent, Huntington; Charles P. Marion, Mamaroneck, both of N.Y.; George N. Richter, San Marino, Calif.; William B. Crouch, Chappaqua; Edward T. Child, Tarrytown, both of N.Y., and Blake Reynolds, Riverside, Conn., assignors to Texaco Inc., White Plains, N.Y.

Continuation-in-part of Ser. No. 167,876, Jul. 14, 1980, and a continuation-in-part of Ser. No. 107,215, Dec. 26, 1979, Pat. No. 4,338,099. This application Dec. 3, 1980, Ser. No. 212,054

Int. Cl.[3] C10J *3/50*

U.S. Cl. 48—86 R 32 Claims

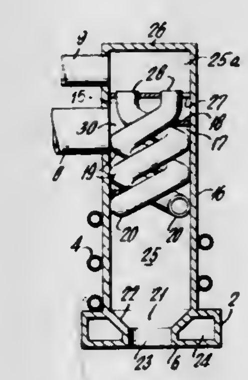

1. A burner for mixing together separate feed streams to produce a multi-phase mixture for reaction in a partial oxidation gas generator comprising: a central bundle of open-ended helical tubes whose central longitudinal axis is coaxial with the central longitudinal axis of the burner and comprising one ring or a plurality of rings concentric with the central longitudinal axis of the burner of helical tubes with each individual helical tube having upstream inlet means passing perpendicularly through a tube sheet forming a gas tight seal therewith and in communication with conduit means by which a first reactant feed stream may be introduced and then split into a plurality of separate streams which pass down through said central bundle of helical tubes and are then discharged through the downstream ends of said tubes; a first coaxial cylindrical conduit concentric with and surrounding said central bundle of helical tubes, said first conduit being closed near the upstream end and forming a manifold means with said tube sheet located within said conduit below said closed end and said first conduit having an unobstructed circular downstream outlet at the tip of the burner comprising a converging frustoconical rear portion that develops into a right cylindrical front portion which terminates at the downstream face of the burner; upstream inlet means in communication with said first conduit through which a second reactant feedstream may be separately introduced and split into a plurality or swirling streams which may pass down through a plurality of related helical-shaped passages formed in the cylindrical space that surrounds the central bundle of helical tubes and/or through the interstices, between adjacent nontouching helical tubes, if any; and means for supporting the individual helical tubes in said central bundle of helical tubes with respect to said first conduit and each other; wherein the downstream tips of the individual helical tubes in said central bundle of helical tubes are retracted upstream from the downstream face of the burner a distance of 2 or more times the minimum diameter of said first conduit downstream outlet to provide a central pre-mix zone comprising at least one coaxial cylindrical shaped pre-mix chamber in series; and said first and second swirling reactant feed streams impinge together and are intimately mixed and said multi-phase mixture is produced in said central pre-mix zone prior to being discharged through said first conduit downstream outlet.

4,371,379

PARTIAL OXIDATION PROCESS USING A SWIRL BURNER

Albert Brent, Huntington; Charles P. Marion, Mamaroneck, both of N.Y.; George N. Richter, San Marino, Calif.; William B. Crouch, Chappaqua; Edward T. Child, Tarrytown, both of N.Y., and Blake Reynolds, Riverside, Conn., assignors to Texaco Inc., White Plains, N.Y.

Division of Ser. No. 212,054, Dec. 3, 1980, which is a continuation-in-part of Ser. No. 167,876, Jul. 14, 1980, which is a continuation-in-part of Ser. No. 107,215, Dec. 26, 1979, Pat. No. 4,338,099. This application Feb. 25, 1982, Ser. No. 352,444

Int. Cl.[3] C10J *3/46*

U.S. Cl. 48—197 R 5 Claims

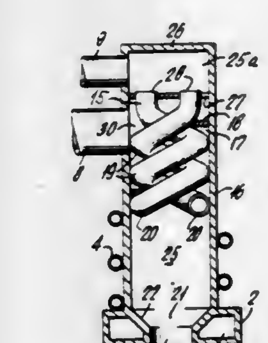

1. In a continuous process for the manufacture of gas mixtures comprising H_2, CO, CO_2 and at least one material selected from the group consisting of H_2O, N_2, A, CH_4, H_2S and COS by the partial oxidation of a reactant stream selected from the group consisting of a pumpable slurry of solid carbonaceous fuel in a liquid carrier, liquid or gaseous hydrocarbon fuel, and mixtures thereof with a reactant stream comprising a free-oxygen containing gas, with or without a temperature moderator selected from the group consisting of steam, liquid water, CO_2, N_2, cooled portion of product gas, and mixtures thereof; said partial oxidation reaction taking place in the reaction zone of a free-flow gas generator at an autogenous temperature in the range of about 1700° to 3500° F. and at a pressure in the range of about 1 to 300 atmospheres, the improvement which comprises;

(1) splitting one of said reactant streams called the first reactant stream with or without admixture with a portion of said temperature moderator into a plurality of separate streams by passing said first reactant stream through a central bundle of open-ended helical tubes which is supported within the central cylindrical conduit of a burner, said central conduit being coaxial with the longitudinal axis of said burner and having an unobstructed circular downstream outlet at the tip of the burner, wherein the downstream ends of said central bundle of helical tubes are retracted upstream from the burner face a distance of

about 2 or more times the minimum diameter of said circular outlet providing one or more cylindrical central pre-mix chambers in series in said central conduit where the mixing of said first and second reactant streams in (3) below takes place;

(2) simultaneously passing the other reactant stream called the second reactant stream with or without admixture with a portion of said temperature moderator through a plurality of related helical-shaped passages formed in the cylindrical space that surrounds said central bundle of helical tubes and/or through the interstices, if any, between said helical tubes;

(3) impinging and intimately mixing together said first and second reactant streams from (1) and (2) to produce a swirling mixture; and

(4) reacting the swirling mixture from (3) by partial oxidation in the reaction zone of said gas generator.

4,371,380

PRESSURE SWING ADSORPTION PROCESS

Christian Benkmann, Gräfelfing, Fed. Rep. of Germany, assignor to Linde Aktiengesellschaft, Wiesbaden, Fed. Rep. of Germany

Filed Apr. 24, 1980, Ser. No. 143,241

Claims priority, application Fed. Rep. of Germany, Apr. 24, 1979, 2916585

Int. Cl.³ B01D *53/04*

U.S. Cl. 55—26 **9 Claims**

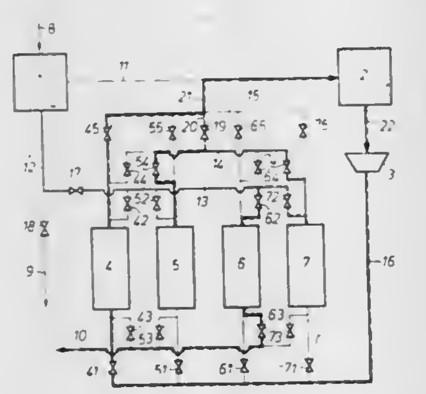

1. In a pressure swing adsorption process for the purification or separation of gaseous mixtures, using plural, cyclically reversible adsorbers, each of which passes through identical switching cycles, wherein each switching cycle comprises sequentially at least one adsorption phase, two expansion phases, a desorption phase, and a pressure buildup phase, the improvement comprising effecting desorption by purging with a foreign gas, following the desorption with a displacement phase, and conducting the displacement of the foreign gas with a gas or gaseous mixture discharged during an expansion phase.

4,371,381

GAS PURIFICATION PROCESS

Paul M. Schuftan, deceased, late of Edinburgh, Scotland (by Alice Schuftan, executrix), assignor to Cryoplants Limited, London, England

Filed Mar. 12, 1981, Ser. No. 243,173

Int. Cl.³ B01D *53/34*

U.S. Cl. 55—27 **10 Claims**

1. A method of purifying a gas mixture comprising between 10 to 60% carbon dioxide and at least one gaseous impurity of higher boiling point than carbon dioxide and at least one gas of lower boiling point than carbon dioxide, comprising the steps:

(a) precooling the gas mixture to the dew point of the carbon dioxide or below;

(b) rectifying the gas mixture in a first rectification column having a condenser and forming a liquid fraction relatively rich in the impurity or impurities and an uncondensed product gaseous fraction relatively lean in or free from the gaseous impurity or impurities, but containing a lower proportion of carbon dioxide than the gas mixture entering the first rectification column;

(c) cooling the condenser with liquid carbon dioxide at a pressure and temperature above the pressure and temperature of carbon dioxide at its triple point, whereby a majority of the carbon dioxide in the gas mixture is condensed and serves as reflux in the first rectification column;

(d) employing the uncondensed product gaseous fraction to precool the gas mixture in the said step (c);

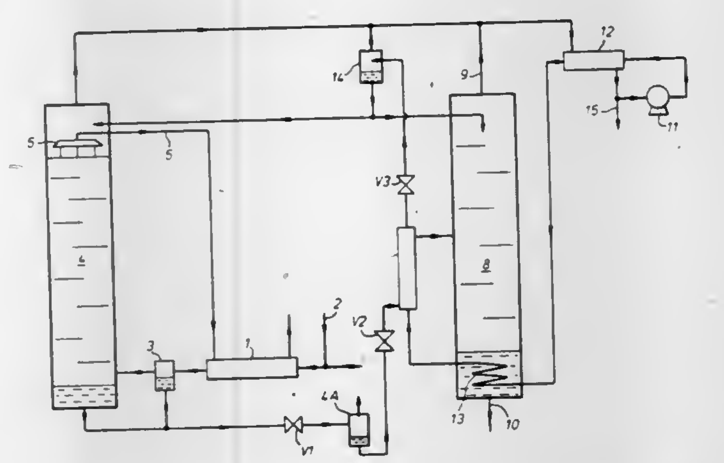

(e) withdrawing the liquid fraction from the first rectification column; expanding the liquid fraction, and vaporising it;

(f) rectifying the vaporised liquid fraction in a second rectification column at a pressure and temperature higher than the pressure at the triple point of carbon dioxide and producing gaseous carbon dioxide substantially free of gaseous impurity and a tail liquid relatively rich in the gaseous impurity or impurities.

4,371,382

PROCESS AND APPARATUS FOR THE CONTACT AND SEPARATION OF IMMISCIBLE FLUIDS

Leon I. Ross, Grand Cayman, Cayman Islands, assignor to Caribbean Properties Limited, Grand Cayman, Cayman Islands

Continuation of Ser. No. 175,841, Oct. 2, 1980, Pat. No. 4,297,111, which is a continuation-in-part of Ser. No. 76,679, Sep. 19, 1979, abandoned, which is a continuation of Ser. No. 878,389, Feb. 16, 1978, abandoned. This application Jul. 7, 1981, Ser. No. 281,097

The portion of the term of this patent subsequent to Oct. 27, 1998, has been disclaimed.

Int. Cl.³ B01D *47/16, 47/18*

U.S. Cl. 55—92 **46 Claims**

1. A process for the continuous contact of a denser fluid feed with a less dense fluid feed and the subsequent separation of a resultant denser fluid product from a less dense immiscible fluid product, the process comprising:

(a) introducing the denser fluid feed into an inner conduit, having a generally circular transverse section surrounding a central longitudinal axis, the conduit being open at one end to provide an outlet with a generally circular rim, centered upon the longitudinal axis of the conduit,

(b) directing the flow of the denser fluid feed through the inner conduit axially toward and through the outlet therefrom into a coaxial outer conduit, also having a generally circular transverse section, overlapping the inner conduit around and beyond the said circular rim, thus defining a generally annular section within the outer conduit where the inner conduit is overlapped thereby and a free section beyond the overlapped rim of the inner conduit, the said overlapped rim defining the outlet of the generally annular section,

(c) spinning the denser fluid feed around the longitudinal axis of the inner conduit fast enough to form the denser fluid feed emerging from the outlet of the inner conduit into a spinning denser fluid ring connecting the overlapped rim of the inner conduit with the overlapping outer conduit, thereby curtaining off the outlet of the generally annular section from the free section of the outer conduit,

(d) introducing the less dense fluid feed into and through the generally annular section of the outer conduit and thence into the free section thereof through the outlet of the generally annular section curtained off by the spinning denser fluid ring, whereby the less dense fluid feed must be intercepted by the spinning denser fluid ring, the fluid feeds consequently interacting with one another within the outer conduit to yield immiscible fluid products differing in density from one another, the spinning fluid products separating centrifugally from one another with the less dense fluid product flowing toward an inner space closer to the longitudinal axis than the surrounding denser fluid product,

(e) withdrawing the less dense fluid product from the said inner space and

(f) separately withdrawing the denser fluid product from the outer conduit.

30. An apparatus for the continuous contact of a denser fluid feed with a less dense fluid feed and the subsequent separation of a resultant denser fluid product from a less dense immiscible fluid product, the apparatus comprising:

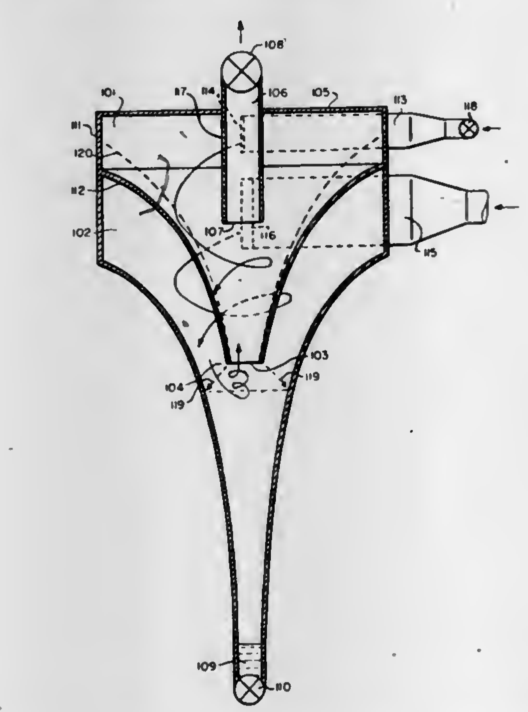

(a) an inner conduit, having a generally circular transverse section surrounding a central longitudinal axis, the conduit being open at one end to provide an outlet with a generally circular rim, centred upon the longitudinal axis of the conduit,

(b) a coaxial outer conduit, also having a generally circular transverse section, overlapping the inner conduit around and beyond the said circular rim, thus defining a generally annular section within the outer conduit where the inner conduit is overlapped thereby and a free section beyond the overlapped rim of the inner conduit, the said overlapped rim defining the outlet of the generally annular section,

(c) means for introducing the denser fluid feed into the inner conduit,

(d) means for directing the flow of the denser fluid feed through the inner conduit axially toward and through the outlet therefrom into the overlapping outer conduit,

(e) means for spinning the denser fluid feed around the longitudinal axis of the inner conduit fast enough to form the denser fluid feed emerging from the outlet of the inner conduit into a spinning denser fluid ring connecting the overlapped rim of the inner conduit with the overlapping outer conduit, thereby curtaining off the outlet of the generally annular section from the free section of the outer conduit,

(f) means for introducing the less dense fluid feed into and through the generally annular section of the outer conduit and thence into the free section thereof through the outlet of the generally annular section curtained off by the spinning denser fluid ring,

(g) an outlet for a resultant less dense fluid product from a location into which it is spun centripetally inward from the spinning fluid ring, and

(h) a separate outlet for a resultant denser fluid product from the outer conduit.

4,371,383

RADON REMOVAL SYSTEM

K. Lennart Rost, P.O. Box 23, Readfield, Me. 04355

Filed Jan. 12, 1981, Ser. No. 224,028

Int. Cl.³ B01D *19/00*

U.S. Cl. 55—169 **6 Claims**

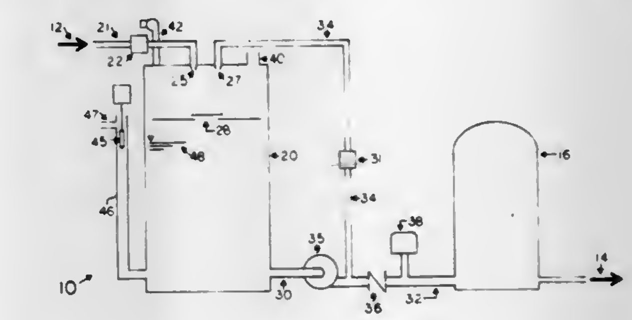

1. A radon gas removal system for installation between a well or other water source and a water use system comprising: at least one reactor tank, first inlet means and first spray head means at the upper portion of said tank for spraying water from a well or other water source into said tank in a fine spray, outlet means comprising first and second outlet pathways at the base portion of said tank, said second outlet pathway comprising means for coupling to a water use system, second inlet means and second spray head means at the upper portion of said tank operatively coupled to said first outlet pathway for recycling and respraying the water in said tank, splash plate means supported in the tank for deflecting and dispersing water sprayed into the tank, pump means coupled at the outlet means, ventilation means including inlet and outlet vents at the top portion of said tank for venting released radon gas away from said tank, first valve means in the first inlet means, liquid level switch means operatively coupled to the tank and first valve means for closing said first valve means when the water level in the reactor tank reaches a specified level, second valve means in the outlet means first pathway, pressure switch means at the outlet means second pathway operatively coupled to the second valve means for closing said second valve means when pressure in the water use system falls below a specified pressure and for opening said second valve means when said specified pressure is restored, said pressure switch means also operatively coupled to the first valve means for opening said valve means when the pressure falls below the specified value, and timer means operatively coupled to said pump means and pressure switch means for activation by the pressure switch means to operate the pump means during a preset timer period whereby the reactor tank is regularly filled and maintained at a desired level, the pressure in a water use system coupled to the outlet means second outlet pathway is regularly restored and maintained at a desired level, and whereby water sprayed into the reactor tank is recycled and resprayed into the reactor tank during the preset timer period for removing and venting radon gas whenever the reactor tank is refilled.

4,371,384
BED VESSELS FOR A COMPACT OXYGEN CONCENTRATOR

Norman R. McCombs, Tonawanda, N.Y., assignor to Green & Kellogg, Inc., Tonawanda, N.Y.

Division of Ser. No. 84,305, Oct. 12, 1979, Pat. No. 4,302,224. This application May 26, 1981, Ser. No. 266,867

Int. Cl.^{3} B01D *53/04*

U.S. Cl. 55—179 **5 Claims**

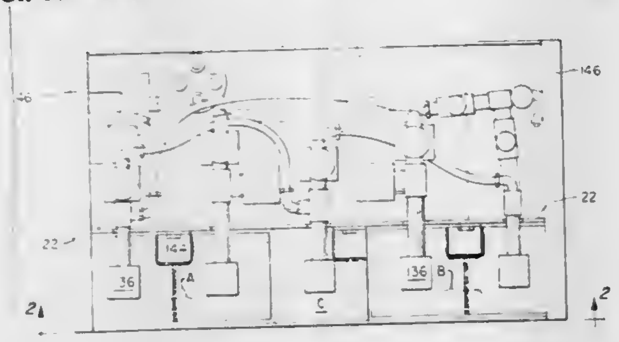

1. A machine for separating a constituent gas out of air using pressure swing adsorption, said machine including air compressor means, at least two closed vessels each containing a bed of adsorbent material, said adsorbent material preferentially adsorbing at least one of the constituent gases in the air, a plurality of solenoid valves being normally closed (no flow), control means for operating said solenoid valves in a cylical manner to achieve alternate adsorption of said at least one constituent gas in and purging of said at least one constituent gas out of said at least two beds of adsorbent material according to a pressure swing adsorption technique, each of said closed vessels comprising a predetermined length of imperforate rectilinear cross-section pipe as its body, means to close the ends of said length of pipe, means to mount said at least two lengths of pipe in a side by side fashion, adsorbent bed material substantially completely filling said vessels, means to permit the flow of gas through said end closing means, whereby said vessels may be arranged in closely spaced relation to each other to thereby permit said machine to be contained in a compact housing, said means to join and permit gas flow comprising a pan-like member at said one end of said at least two pipes with the ends of said pipes terminating short of the base of said pan-like member, whereby gas flow communication can be had between said one of said pipes through the space defined by said pan-like member.

5. A machine for separating a constituent gas out of air using pressure swing adsorption, said machine including air compressor means, at least one closed vessel containing a bed of adsorbent material, said adsorbent material preferentially adsorbing at least one of the constituent gases in the air, a plurality of solenoid valves to control gas flows into and out of said at least one vessel, all of said plurality of solenoid valves being normally closed (no flow), control means for operating said solenoid valves in a cyclical manner to achieve alternate adsorption of said at least one constituent gas in and purging of said at least one constituent gas out of said at least one bed of adsorbent material according to a pressure swing adsorption technique, said at least one closed vessel comprising a predetermined length of imperforate square cross-section pipe as its body, means to close the ends of said length of pipe, adsorbent bed material substantially completely filling said vessel, means to permit the flow of gas through said end closing means, said gas flow means comprising filter means joined to said end closing means, whereby a plurality of said vessels may be arranged in closely spaced relation to each other to thereby permit said machine to be contained in a compact housing, said vessel comprising a pair of substantially equal lengths of said pipe, means to join said pair together longitudinally side-by-side and to permit gas flow communication between said pipes at one end of the joined together pair with one of said gas flow permitting means in each of the end closing means at the other ends of the joined together pair, whereby the functional length of the adsorbent bed in said vessel is substantially equal to twice the length of one of said pipes and the physical length of said vessel is substantially equal to the length of one of said pipes, and said means to permit gas flow between said pipes at said one end of the joined together pair comprising a pan-like member sealingly joined to the said one-ends of said pair of pipes, whereby said gas flow communication is via said pan-like member.

4,371,385
DEAERATING LIQUID

Steven H. Johnson, Lakewood, Colo., assignor to Cobe Laboratories, Inc., Lakewood, Colo.

Filed Apr. 28, 1981, Ser. No. 258,423

Int. Cl.^{3} B01D *19/00*

U.S. Cl. 55—190 **9 Claims**

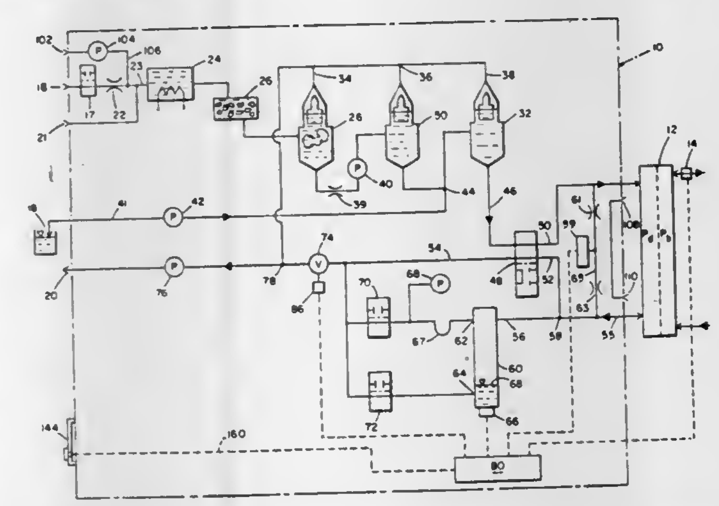

1. Apparatus for deaerating liquid supplied to a dialyzer comprising

first flow restriction means in a source supply line connected to a source of liquid to limit the flow rate through said line,

first deaeration chamber means having a liquid outlet, a liquid inlet connected to said source supply line downstream of said first flow restriction means, and an air outlet located above said liquid inlet and said liquid outlet,

a first positive displacement pump having an inlet connected to said liquid outlet of said deaeration chamber means, so that said deaeration chamber means is between said pump and said first flow restriction means, and an outlet connected to a dialyzer supply line and capable of pumping at a flow rate higher than the flow rate permitted by said first flow restriction means to lower the pressure of the liquid between said first pump and said first flow restriction means and cause volatilization of gases dissolved therein,

low pressure sink means connected to said air outlet, and

second flow restriction means connected between said liquid outlet of said deaeration chamber means and said first pump to raise the pressure at said liquid outlet to a level greater than that at said air outlet to cause volatilized gas collected within said chamber to flow through said air outlet and not through said liquid outlet.

4,371,386
FILTER HOUSING

Francisco DeVecchi, Farmington Hills, Mich., assignor to Veco International, Inc., Southfield, Mich.

Filed May 18, 1981, Ser. No. 265,260

Int. Cl.^{3} B01D *46/10*

U.S. Cl. 55—338 **18 Claims**

2. A device for sealably holding a filter, said device comprising:

a filter comprising at least one type of filtering material sealed in a frame surrounding and supporting said filtering material, said filter having an upstream side and a downstream side, wherein a knife-edge is embedded in said upstream side of said filter frame, said knife-edge forming a substantially vertical protrusion from said upstream side of said filter frame,

and a filter holding device that is configured to contain a first side running around the periphery of said filter holding device to form an outer chamber wall, a lip that extends outwardly from the bottom of said first side, a channel bar that is clamped to said lip to form a chamber floor, and a chamber ceiling that extends inwardly from said first side and substantially parallel to said lip,

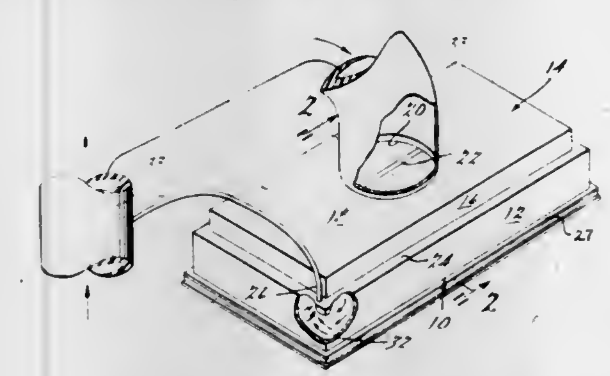

whereby said filter is inserted into said filter holding device to form a chamber around the periphery of said frame of said filter, said frame of said filter forming an inner chamber wall of said chamber, said chamber being connected to an air return for said filter thereby creating a vacuum within said chamber to remove any unfiltered air that bypasses said filter and leaks into said chamber.

4,371,387
METHOD AND APPARATUS FOR HANDLING GLASSWARE

Addison B. Scholes, Muncie, Ind., assignor to Ball Corporation, Muncie, Ind.

Filed Aug. 3, 1981, Ser. No. 289,356

Int. Cl.^{3} C03B *35/12*

U.S. Cl. 65—118 **13 Claims**

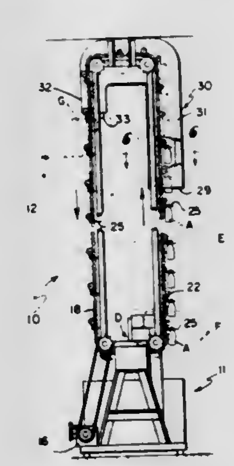

1. A method of maintaining the strength of glass containers formed from a glass container forming machine comprising the steps of providing molten glass gobs to said machine, initially forming from said gobs finish portions for said containers, immediately forming from said gobs the remaining portions of said containers, transferring the fully formed containers in spaced relationship from each other while being held only at their initially formed portions to a moving cradle means proximate to said machine, said cradle means engaging only said previously held portions of the containers, allowing the newly formed containers to partially cool immediately following their formation, annealing said containers while so held including their bottoms whereby said containers are subjected to a controlled rate of cooling, and finally rapidly cooling the annealed containers to about ambient temperature while held by the initially formed portions.

13. An apparatus for manipulating glass containers newly formed from an individual section machine to maintain the inherent strength characteristics of said containers comprising means for passing molten glass gobs to said machine, means connected to said machine for initially forming from said gobs finish portions for said containers, means adjacent to said initial forming means for immediately and fully forming from said gobs the remaining portions of said containers, means for transferring the fully formed containers in spaced relationship from each other, said transferring means provided with gripping means for holding only the initially formed portions of the containers, means proximate to said gripping means for receiving said containers, said receiving means including cradle means for engaging only the finish of said containers, means for annealing said containers while engaged in said cradle means whereby said containers are subjected to a controlled rate of cooling, and means associated with said annealing means for rapidly cooling the containers.

4,371,388
3-SUBSTITUTED AMINOALKYL-2-BENZOTHIAZOLINONES AS PLANT GROWTH REGULANTS

John J. D'Amico, Olivette, Mo., assignor to Monsanto Company, St. Louis, Mo.

Filed Jan. 25, 1980, Ser. No. 115,475

Int. Cl.^{3} A01N *43/78;* **C07D** *277/68*

U.S. Cl. 71—90 **10 Claims**

6. A method of regulating the natural growth and development of leguminous plants which comprises applying to said leguminous plants or their habitat an effective plant growth regulating amount of a compound of the formula

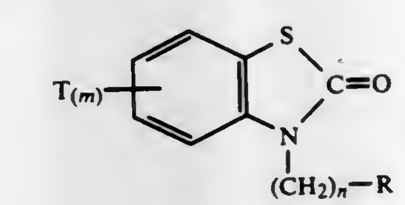

wherein T is halogen, m is an integer of from 0 to 2, n is an integer of from 1 to 3, and R is a

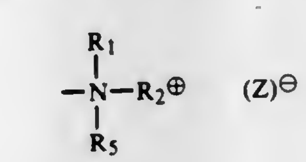

group or a

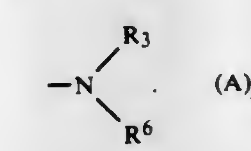

group wherein Z is halogen, p is an integer 0 or 1, A is a strong acid having a pKa in water of 2.5 or less, R_1 and R_2 are independently lower alkyl, R_3 is hydrogen or lower alkyl, R_5 is independently selected from the group consisting of lower alkyl, phenyl, a halopyridinyl group and a

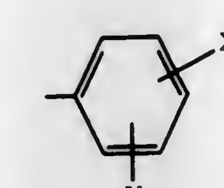

group wherein X is selected from the group consisting of hydrogen, halogen, lower alkyl and trifluoromethyl and Y is lower alkyl or trifluoromethyl, R_6 is hydrogen or a group represented by R_4 and R_1 and R_5 together with the nitrogen or

R_3 and R_6 together with the nitrogen can form a cyclic ring selected from the group consisting of piperidyl, morpholino and N'-lower alkyl-piperazinyl.

4,371,389
2-CHLORO-4,5-DISUBSTITUTED-THIAZOLES USEFUL AS HERBICIDAL SAFENERS

Robert K. Howe, Bridgeton, and Len F. Lee, Maryland Heights, both of Mo., assignors to Monsanto Company, St. Louis, Mo.
Continuation-in-part of Ser. No. 80,751, Oct. 1, 1979, Pat. No. 4,284,426. This application Aug. 28, 1980, Ser. No. 182,255
Int. Cl.³ A01N *25/32*

U.S. Cl. 71—90 **19 Claims**

1. A method of reducing herbicidal injury to sorghum plants due to application thereto of alachlor or butachlor herbicide which comprises applying to the plant locus a non-phytotoxic safening effective amount of a compound having the formula:

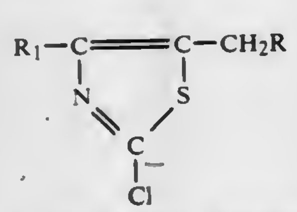

where R is equal to lower alkyl carbonyloxy, lower alkoxy carbonyl or lower alkoxy carbonyl (lower) alkoxy; R_1 is lower alkyl, halo (lower) alkyl, phenyl, or phenyl substituted by one to three groups, which may be the same or different, selected from the group consisting of halogen, lower alkyl, trifluoromethyl and cyano.

4,371,390
FLOWABLE HERBICIDES

Francis J. Le Clair, Webster Groves, and John M. Surgant, Clayton, both of Mo., assignors to Monsanto Company, St. Louis, Mo.
Continuation of Ser. No. 957,125, Nov. 3, 1978, abandoned. This application Nov. 26, 1980, Ser. No. 210,717
Int. Cl.³ A01N *25/02, 25/00*

U.S. Cl. 71—93 **6 Claims**

1. Flowable herbicide having the following composition by weight:
(a) from 25% to 50% of propachlor herbicide;
(b) from 0 to 15% of atrazine;
(c) an emulsifier/suspension system comprising
(i) hydrated amorphous silicon dioxide: 2–8%
(ii) polyoxypropylene/polyoxyethylene block copolymer mol. wt. about 6500: 2–8%
(iii) hydrated aluminum silicate: 0.5–2%
(d) an inert, low-freezing point polyglycol solvent compatible with components (c) (i)-(iii): 5–15%
(e) defoamer: 0–0.1%, and
(f) water: 30–70%
the solid components of said composition having a particle size no greater than about 20 microns.

4,371,391
HERBICIDAL SULFONAMIDES

George Levitt, Wilmington, Del., assignor to E. I. Du Pont de Nemours and Company, Wilmington, Del.
Continuation-in-part of Ser. No. 187,174, Sep. 15, 1980, abandoned, which is a continuation of Ser. No. 840,167, Oct. 6, 1977, Pat. No. 4,257,802. This application May 7, 1981, Ser. No. 257,585
Int. Cl.³ C07D *251/42, 251/46;* **A01N** *43/66*

U.S. Cl. 71—93 **30 Claims**

1. A compound of the formula:

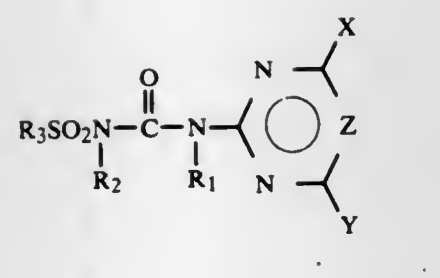

(I)

wherein
R_1 is H, alkyl of one to three carbon atoms or $—OCH_3$;
R_2 is H or alkyl of one to three carbon atoms;
R_3 is

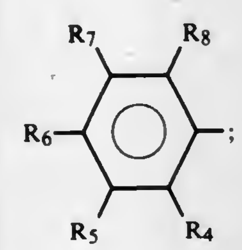

R_7 is hydrogen, fluorine, chlorine, bromine, alkyl of 1–4 carbon atoms, alkoxy of 1–4 carbon atoms, nitro, CF_3, CH_3S or CH_3CH_2S;
R_4 is $R_9S(O)_n$;
R_5, R_6 and R_8 are independently hydrogen, fluorine, chlorine, bromine, methyl or methoxy;
R_9 is C_1–C_4 alkyl, C_3–C_4 alkenyl, cyclopentyl or cyclopropylmethyl;
X is CH_3, $—CH_2CH_3$, alkoxy of one to three carbons, CF_3, $CH_3S—$, $CH_3OCH_2—$ or $CH_3OCH_2CH_2O—$;
Y is CH_3 or OCH_3;
Z is N; and
n is 0, 1 or 2;
and their agriculturally suitable salts; provided that:
(a) R_1 and R_2 may not simultaneously be hydrogen;
(b) when R_6 is other than H, then R_5, R_7 and R_8 must be hydrogen;
(c) when n is 1, then R_7 is other than CH_3S or CH_3CH_2S, and X is other than CH_3S;
(d) when R_6 is H and R_5, R_7 and R_8 are other than H, then R_5, R_7 and R_8 must either be Cl or CH_3; and
(e) when R_9 is C_1–C_2 alkyl, then n is 1 or 2.

23. A method for controlling the growth of undesired vegetation which comprises applying to the locus to be protected an effective amount of a compound of claim 1.

4,371,392
PROCESS FOR REFINING A MOLTEN METAL

Kazumasa Hasegawa; Minao Ito, both of Tokai; Saburo Sugiura, Nagoya; Kiyoichi Yamano, and Shizunori Hayakawa, both of Tokai, all of Japan, assignors to Daido Tokishuko Kabushiki Kaisha, Aichi, Japan
Division of Ser. No. 100,433, Dec. 5, 1979, Pat. No. 4,308,415. This application Jul. 20, 1981, Ser. No. 284,802
Claims priority, application Japan, Dec. 27, 1978, 53-160068; Jun. 11, 1979, 54-73352
Int. Cl.³ H05B *7/18;* **C22B** *4/00*

U.S. Cl. 75—10 R **14 Claims**

1. Method of refining molten metal under an inert atmosphere comprising:
charging flux and molten metal to be refined into a refining vessel provided with at least one heating electrode and a first inert gas blowing means having a nozzle exiting to the interior of said vessel above the molten metal level when the vessel is in the upright position but which nozzle is immersed in the molten metal only when the refining vessel is tilted by rotation, the refining vessel being also provided with a second inert gas blowing means from which inert gas is blown into the molten metal contained

in the refining vessel when the vessel is in the upright position prior to its being tilted;
effecting a first refining by heating said molten metal with said electrode, while maintaining the inside of said vessel under an inert atmosphere, thereby causing the molten metal to be reacted with said flux;

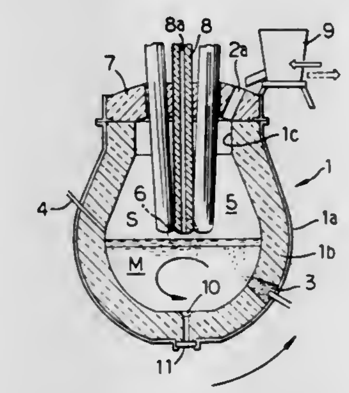

subsequently effecting a second refining by rotating said vessel to tilt same enough to immerse said blowing nozzle of said first inert gas blowing means in the molten metal and blowing inert gas from said nozzle into said molten metal; and
taking out the thus refined molten metal from said refining vessel.

4,371,393
ZERO VALENT METAL RECOVERY WITH POLYACETYLENE

Robert D. Gleim, Newtown, and Richard T. Gray, Levittown, both of Pa., assignors to Rohm and Haas Company, Philadelphia, Pa.
Filed Jun. 2, 1981, Ser. No. 269,290
Int. Cl.³ C22B *11/04, 5/00*

U.S. Cl. 75—108 **13 Claims**

1. A process for the production of a zero valent metal from an aqueous solution of a salt of said metal comprising contacting said metal salt solution, wherein said metal salt has a reduction potential of about +0.5 V or greater, with polyacetylene for a period of time sufficient to reduce at least a portion of said metal salt to a zero valent metal while leaving said polyacetylene in a substantially non-doped state.

4,371,394
CORROSION RESISTANT AUSTENITIC ALLOY

Michael Henthorne, Los Altos; Robert J. Yinger, Jamul, both of Calif., and Terry A. DeBold, Wyomissing, Pa., assignors to Carpenter Technology Corporation, Reading, Pa.
Filed Nov. 21, 1980, Ser. No. 209,056
Int. Cl.³ C22C *38/58*

U.S. Cl. 75—128 A **26 Claims**

1. A corrosion resistant austenitic stainless steel alloy consisting essentially in weight percent of about

	(w/o)
C	0.03–0.1
Mn	4–11
Si	0.6 Max.
Cr	20–23
Ni	14–18
Mo	5.05–5.6
B	0.01 Max.
Ce + La	0.4 Max.
Al	0.1 Max.
[C + N	0.23 Min.]

in which nitrogen ranges from a minimum of 0.15 w/o to no more than the amount that can be retained in solid solution, the minimum amount of carbon plus nitrogen being equal to:

$$.23 + \frac{(\%\ Mo - 4.8)}{10} + (\%\ Mn - 4) \times .03$$

the balance being essentially iron, and the elements being balanced so that cold rolled annealed specimens prepared with a crevice and tested in accordance with ASTM G48-76 in 10 w/o $FeCl_3.6H_2O$ at 50 C. for 72 hours have a weight loss of less than 0.3 gram.

4,371,395
TECHNIQUE FOR ADDING LEAD TO STEEL

Robert H. Ogletree, Carrollton, Ga., assignor to Southwire Company, Carrollton, Ga.
Filed Jul. 6, 1981, Ser. No. 280,717
Int. Cl.³ C21B *7/02*

U.S. Cl. 75—129 **15 Claims**

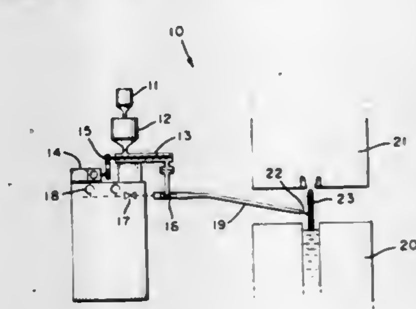

1. A method of producing leaded, resulfurized free machining steel comprising the steps of preparing a molten steel melt, deoxidizing said steel melt with from about 0.3 to about 1.65 percent by weight of manganese in the form of ferromanganese, introducing particulated lead sulfide into the molten steel, and cooling the molten steel to solidification in a mold.

4,371,396
METHOD FOR MANUFACTURING BILLETS, FROM METAL POWDER, INTENDED TO BE SUBSEQUENTLY ROLLED OR FORGED

Hans G. Larsson, and Erik Westman, both of Vasteras, Sweden, assignors to ASEA Aktiebolag, Vasteras, Sweden
Filed Feb. 22, 1980, Ser. No. 123,731
Claims priority, application Sweden, Feb. 27, 1979, 7901734
Int. Cl.³ B22F *3/14*

U.S. Cl. 419—56 **9 Claims**

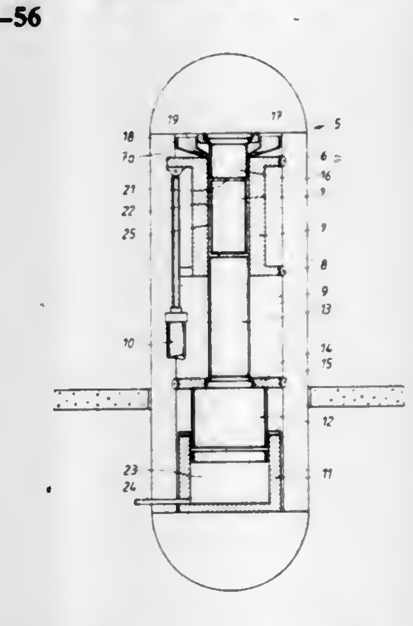

1. A method for manufacturing metallic bodies intended to be subsequently machined into a desired shape by plastic deformation, comprising the steps of filling a sheath capsule with metal powder grains, sealing the capsule closed, heating the

filled and sealed capsule at a heating station to a predetermined metal powder bonding temperature, and subjecting the filled and sealed capsule at the bonding temperature to a predetermined high pressure at a pressing station in the absence of external heat until the powder grains are bonded together to form a substantially solid body, the subjecting step comprising the steps of placing one end of the capsule at the bonding temperature on a layer of deformable and heat-insulating material in an over-sized forming cavity of a press which includes at least one movable punch, said material comprising unheated talc or pyrophyllite, an annular space being defined between said press and the capsule after insertion, filling said space with said deformable material in powder or grain form with the capsule in said press, and covering a layer of said material over the opposite end of the capsule so as to completely surround the capsule, whereby said deformable material completely fills said space and influences the capsule isostatically during the subjecting step to thereby effect the application of pressure completely against all sides of the capsule such that any folding or corrugating of the capsule sheath is substantially avoided, and whereby said deformable material has the necessary heat-insulating characteristic such that equalization of the temperature within the capsule is brought about by delaying the compressing thereof until the surface layer, which may have cooled between said heating and subjecting steps, has been re-heated by heat transfer from the inner portion of the capsule.

4,371,397
CHEMICAL COPPER-PLATING BATH

Hideo Honma, Yokohama; Kunihiro Ikari, Yokosuka; Osamu Sasaki, Sagamihara; Toshiki Sasabe, Tokyo; Kazuhiro Takeda, and Tsutomu Takamura, both of Yokohama, all of Japan, assignors to Tokyo Shibaura Denki Kabushiki Kaisha, Kawasaki, Japan

Filed Dec. 4, 1980, Ser. No. 212,998

Claims priority, application Japan, May 8, 1980, 55-59962

Int. Cl.³ C23C *3/02*

U.S. Cl. 106—1.23 **6 Claims**

1. In a chemical copper-plating bath, comprising a copper salt, a complex-forming agent, a reducing agent and a pH controller, the improvement which comprises a nonionic surfactant represented by the formula:

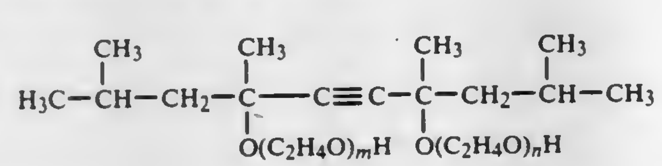

wherein m and n are integers of 1 or more, and $m+n \geqq 12$, and at least one compound selected from the group consisting of 2,9-dimethyl-1,10-phenanthroline and 2,2'-dipyridyl in amounts effective to improve the ductility of copper films produced from the bath.

4,371,398
POLISHES/POLISH RESTORERS

Americo L. Forchielli, Sterling Junction, Mass., assignor to Petrolite Corporation, St. Louis, Mo.

Filed Jul. 16, 1980, Ser. No. 169,340

Int. Cl.³ C09G *1/04, 1/16*

U.S. Cl. 106—10 **19 Claims**

1. A composition of matter useful as a protective coating and coating restorer comprising: (1) a liquid water-insoluble polyolefin formed by polymerizing alpha-olefins of the formula $RCH{=}CH_2$ where R is a hydrocarbon group, (2) an emulsifier for said polyolefin, (3) a solvent which can also be a leveling agent, and (4) water.

4,371,399
WATER-REPELLENT GYPSUM MORTAR

Adolf May, Hofheim am Taunus; Franz J. Voetz, Camberg, and August Gerl, Frankfurt am Main, all of Fed. Rep. of Germany, assignors to Hoechst Aktiengesellschaft, Fed. Rep. of Germany

Filed Feb. 9, 1982, Ser. No. 347,313

Claims priority, application Fed. Rep. of Germany, Feb. 14, 1981, 3105407

Int. Cl.³ C04B *11/00*

U.S. Cl. 106—109 **3 Claims**

1. A water-repellent gypsum mortar, which contains an agent conferring hydrophobic properties, which is composed of

(a) a fatty amine of the formula

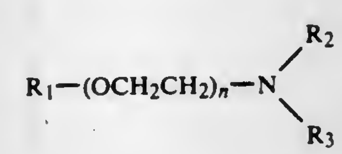

in which R_1 is C_8–C_{22}-alkyl, preferably C_{14}–C_{22}-alkyl, C_8–C_{22}-alkenyl, preferably C_{14}–C_{22}-alkenyl, or C_8–C_{22}-alkylphenyl, R_2 and R_3 are hydrogen, C_1–C_4-alkyl, C_2–C_4-alkenyl, C_1–C_4-alkoxy-C_1–C_4-alkyl, C_1–C_4-hydroxyalkyl, phenyl, benzyl or a group of the formula $-(CH_2CH_2O)_nH$ and n is a number from 0 to 4,

(b) a low-molecular acid and

(c) an alkali metal siliconate of the formula

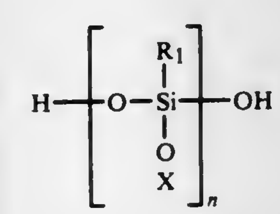

in which R_1' is C_1–C_7-alkyl, C_1–C_7-alkenyl, phenyl or benzyl, X is an alkali metal ion and n is a number from 1 to 10.

4,371,400
MASTIC ASPHALT COMPOSITION

Karl-Hans Müller, Bruchköbel, and Walter Barthel, Langenselbold, both of Fed. Rep. of Germany, assignors to Degussa Aktiengesellschaft, Frankfurt, Fed. Rep. of Germany

Filed Aug. 20, 1981, Ser. No. 294,657

Claims priority, application Fed. Rep. of Germany, Sep. 27, 1980, 3036537

Int. Cl.³ C08L *95/00*

U.S. Cl. 106—273 R **8 Claims**

1. A mastic asphalt composition comprising mastic asphalt and 0.2 to 5 wt. % of at least one crystalline, powdered, synthetic zeolite based on the total mixture.

4,371,401
BITUMINOUS MIXTURES FOR ROADS WITH VERY HIGH PERFORMANCES, METHOD FOR PRODUCING SAID MIXTURES AND THEIR APPLICATION ON ROADS

Georges Langumier, Saint Germain en Laye, France, assignor to Travaux et Produits Routiers, Paris, France

Filed Jun. 3, 1981, Ser. No. 269,978

Claims priority, application France, Jun. 5, 1980, 80 12554

Int. Cl.³ C08L *95/00*

U.S. Cl. 106—281 R **9 Claims**

1. High performance bituminous mixtures for roads having resistance to rutting and to cracking, wherein the said mixtures consist in a granular composition basically containing hard rock aggregate and a binder composed of very hard bitumens used in an amount corresponding to a corrected richness modulus K ranging from 3.8 to 4.5 in accordance with the relation:

$$\text{binder content} = K\sqrt[5]{\Sigma \cdot \alpha}$$

where Σ = conventional specific surface-area of the aggregate $= 0.25\,G + 2.3\,S + 12\,s + 135\,f$, in square meters per kilogran (m^2/kg) with the proportions by weight:

G representing the percentage of particles larger than 6 mm,

S representing the percentage of particles ranging from 6 to 0.315 mm,

s representing the percentage of particles ranging from 0.315 to 0.08 mm,

f representing the percentage of particles smaller than 0.08 mm,

K = corrected richness modulus,

α = corrective coefficient intended to take into account the mass per unit volume of the aggregate,

said binder having a ball and ring temperature of 70° to 90° C., a penetrability at 25° C. of 5 to 20, a PFEIFFER penetration index >1, and an embedding temperature of 175° C.

4,371,402
PROCESS FOR PREPARATION OF FRUCTOSE-CONTAINING SOLID SUGAR

Hiroshi Kubota, Tokyo, Japan, assignor to Kawazu Sangyo Kabushiki Kaisha, Japan

Filed Aug. 5, 1981, Ser. No. 290,198

Claims priority, application Japan, Aug. 11, 1980, 55-109264

Int. Cl.³ C13F *1/02, 1/04;* **C13K** *11/00*

U.S. Cl. 127—60 **15 Claims**

1. A process for preparation of fructose containing solid sugar, said process comprising:

a step of dehydration in which fructose containing liquid sugar of FE of less than 100 is brought, while in the presence of an organic solvent exhibiting azeotropic behaviour with respect to water, in contact with a stream of gas causing no denaturation of fructose containing sugar, with heating during the dehydration step to remove water in a vapor phase together with said organic solvent thereby to reduce the water content to less than 3% by weight with respect to said fructose-containing sugar (excluding the residual organic solvent);

a step of aging in which the fructose containing liquid sugar obtained from said step of dehydration is subjected to seed crystal addition treatment in 1 to 20% by weight of organic solvent and the aging is carried out until an aged, somewhat deliquescent crystalline aggregate is formed from the sugar;

a step of solidification in which the aged fructose containing sugar obtained from said step of aging is introduced into anhydrous alcohol and kept therein until any molasses mixed in the sugar is eluted and the sugar is solidified as a non-deliquescent sugar; and

a step of removing the alcohol from the solid non-deliquescent sugar obtained from said step of solidification.

4,371,403
METHOD OF PROVIDING GETTERING SITES THROUGH ELECTRODE WINDOWS

Hiroyuki Ikubo, and Kunihiko Wada, both of Yokohama, Japan, assignors to Fujitsu Limited, Kawasaki, Japan

Filed Dec. 18, 1980, Ser. No. 217,756

Claims priority, application Japan, Dec. 20, 1979, 54-166211

Int. Cl.³ H01L *21/265*

U.S. Cl. 148—1.5 **5 Claims**

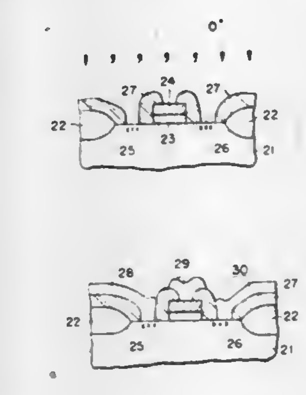

1. A method of manufacturing a semiconductor device employing a semiconductor substrate having a main surface comprising the steps of:

ion implanting an impurity material into a predetermined surface area of the main surface of said semiconductor substrate to form at least one desired region of a predetermined conductivity type extending into said substrate from said main surface thereof and forming a pn junction with said substrate material,

forming an insulating layer on the entire said selected main surface of said semiconductor substrate,

opening a window in said insulating layer aligned with each respective said at least one desired region and having a smaller area than said predetermined surface area of said respective desired region for an electrical contact to said desired region within said smaller area,

implanting ions of a gettering material having the effect of gettering defects through said window and into the surface of said desired region, localized therein by said smaller area of said window and to a controlled depth so as not to reach said pn junction of said region with said substrate, said gettering material being selected from the class consisting of oxygen, carbon, fluorine and argon, and

providing a conductive layer on said substrate main surface including said insulating layer thereon, and forming an electrode for electrically contacting each said desired region within said respective window.

4,371,404
SINGLE CRYSTAL NICKEL SUPERALLOY

David N. Duhl, Newington, and Xuan Nguyen-Dinh, Manchester, both of Conn., assignors to United Technologies Corporation, Hartford, Conn.

Filed Jan. 23, 1980, Ser. No. 114,763

Int. Cl.³ C22F *1/10*

U.S. Cl. 148—3 **2 Claims**

2. A method for producing a single crystal superalloy article, suited for use as an element in a gas turbine engine, which consists of:

a. providing a composition consisting essentially of 6.5 to 8.2% Cr, 4.5 to 5.5% Al, 0.7 to 1.5% Ti, 1.7 to 2.3% Mo, 3 to 5% W, 10.0 to 13.5% Ta, up to 3% Re, 3 to 8% Co, balance essentially nickel;

b. melting and directionally solidifying the composition to produce a single crystal article;

c. heat treating the article between about 2385° and 2390° F. for from about 1 to 10 hours;
d. cooling the article;
e. reheating the article to at least one temperature between about 1500° and 2100° F. and holding the article within the temperature range of 1500° to 2100° F. for from about 2 to 50 hours.

4,371,405
PROCESS FOR PRODUCING GRAIN-ORIENTED SILICON STEEL STRIP
Jiro Harase; Kunihide Takashima, both of Munakatamachi, and Shozaburo Nakashima, Kitakyushu, all of Japan, assignors to Nippon Steel Corporation, Tokyo, Japan
Filed Aug. 15, 1980, Ser. No. 178,633
Claims priority, application Japan, Aug. 22, 1979, 54-106797
Int. Cl.³ H01F *1/04*
U.S. Cl. 148—111 **8 Claims**

1. A process for producing a grain-oriented silicon steel strip or sheet with a high magnetic flux density said process employing AlN as a grain-growth inhibitor to achieve secondary recrystallization, said process comprising the steps of:
forming a silicon steel slab containing from 0.030 to 0.085% by weight of carbon, from 2.5 to 4% by weight of silicon, from 0.010 to 0.065% by weight of an acid-soluble aluminum, from 0.0030 to 0.012% by weight of nitrogen, from 0.05 to 0.20% by weight of manganese, and from 0.005 to 0.040% by weight of sulfur, the balance being iron and unavoidable impurities;
hot rolling the silicon steel slab and coiling the resulting hot rolled strip at a temperature controlled within a range of from 700° to 1000° C.;
heavily cold rolling the hot rolled strip in one step to reduce the thickness of the strip an amount of not less than 80% so that it reaches the final gauge;
decarburization-annealing the strip, and coating the strip with a separating agent, and finally, finish-annealing the strip.

4,371,406
SOLID-STATE DEVICE
Chou H. Li, 379 Elm Dr., Roslyn, N.Y. 11576
Continuation of Ser. No. 764,433, Jan. 31, 1977, Pat. No. 4,136,435, which is a continuation of Ser. No. 405,138, Oct. 10, 1973, abandoned, and Ser. No. 580,414, May 23, 1975, abandoned, said Ser. No. 405,138, and Ser. No. 580,415, each is a continuation-in-part of Ser. No. 190,483, Oct. 19, 1971, Pat. No. 3,765,956, and a continuation-in-part of Ser. No. 386,102, Aug. 6, 1973, and a continuation-in-part of Ser. No. 802,018, Feb. 25, 1969, Pat. No. 3,500,135, said Ser. No. 190,483, is a continuation-in-part of Ser. No. 868,129, Oct. 21, 1969, abandoned, which is a continuation-in-part of Ser. No. 491,718, Sep. 30, 1965, abandoned, said Ser. No. 802,018, is a continuation-in-part of Ser. No. 490,955, Sep. 28, 1965, Pat. No. 3,430,109. This application Jan. 29, 1979, Ser. No. 7,584
The portion of the term of this patent subsequent to Jan. 30, 1996, has been disclaimed.
Int. Cl.³ H01L *21/208*
U.S. Cl. 148—171 **26 Claims**

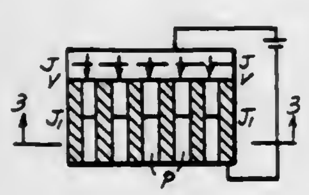

1. A method of making an active solid-state device comprising:
forming by a process which includes directional melt growth a structure having first phase bodies which are substantially parallel to each other and are spaced from each other by second phase bodies, each of the bodies of at least one of the phases being a single crystal semiconductor substance, the first phase bodies physically contacting the second phase bodies, and the structure including PN junctions which are within the semiconductor material bodies and said structure being crystallographically discontinuous at said physical contact between the first and second phase bodies, and
providing electrical contact to the bodies of at least one of said phases to enable the structure to operate as an active device.

4,371,407
METHOD FOR PRODUCING SEMICONDUCTOR DEVICE
Kei Kurosawa, Toyko, Japan, assignor to Tokyo Shibaura Denki Kabushiki Kaisha, Kawasaki, Japan
Filed Oct. 28, 1981, Ser. No. 315,909
Claims priority, application Japan, Oct. 28, 1980, 55-150992; Apr. 17, 1981, 56-57899
Int. Cl.³ H01L *7/44;* **C23C** *15/00*
U.S. Cl. 148—187 **9 Claims**

1. A method for producing a semiconductor device comprising the steps of:
forming a first material film on a semiconductor substrate;
forming a second material film on said first material film;
selectively removing said second material film;
exposing a structure thus formed to a gas plasma atmosphere to form a plasma polymerization film on at least an exposed surface of said first material film;
removing a remainder of said second material film; and
removing the exposed surface of said first material film by using said plasma polymerization film as a mask to form a first material film pattern.

4,371,408
LOW WATER EMULSION EXPLOSIVE COMPOSITIONS OPTIONALLY CONTAINING INERT SALTS
Harold T. Fillman, Bowie, Md., assignor to Atlas Powder Company, Dallas, Tex.
Filed Oct. 27, 1980, Ser. No. 201,208
Int. Cl.³ C06B *45/02*
U.S. Cl. 149—21 **26 Claims**

1. A water-in-oil explosive emulsion composition having a ½ cartridge gap sensitivity of at least about three inches formed from an emulsion matrix having:
from about 4% to less than about 10% by weight water, and comprising from about 4% to about 10% by weight of the total explosive emulsion composition of a lower alkylamine, nitrate or alkanolamine nitrate sensitizing agent and from about 0.25 to less than about 1% by weight of the total explosive emulsion composition nonexplosive detonation catalyst.

4,371,409
GELATINIZED HIGH EXPLOSIVE COMPOSITION AND METHOD OF PREPARATION
Richard V. Cartwright, Sussex, N.J., and Ronald D. Lees, Bartlesville, Okla., assignors to Hercules Incorporated, Wilmington, Del.
Filed Jun. 1, 1981, Ser. No. 268,559
Int. Cl.³ C06B *25/28*
U.S. Cl. 149—94 **7 Claims**

1. A high explosive composition comprising:
an explosive sensitizer composition consisting essentially of an amount within the range of about 5% to 95% of a liquid nitrated polyol derived from an aliphatic polyol having from 2 to about 6 alcoholic hydroxyl groups and from 2 to about 10 carbon atoms and an amount with the range from about 95% to about 5% of metriol trinitrate, said sensitizer composition gelatinized by nitrocellulose and a polar compatibility additive taken from the group consisting of dimethylformamide, formamide, N,N-dimethylacetamide, N-methyl-2-pyrrolidone and dimethylsulfoxide.

4,371,410
METHOD FOR APPLYING, STITCHING AND SEVERING A TAPE ON A BODY
Samuel B. Stevens, Pekin, Ill., assignor to Caterpillar Tractor Co., Peoria, Ill.
Division of Ser. No. 133,634, Sep. 11, 1979, Pat. No. 4,295,916. This application Jul. 6, 1981, Ser. No. 280,195
Int. Cl.³ B29H *17/00*
U.S. Cl. 156—117 **6 Claims**

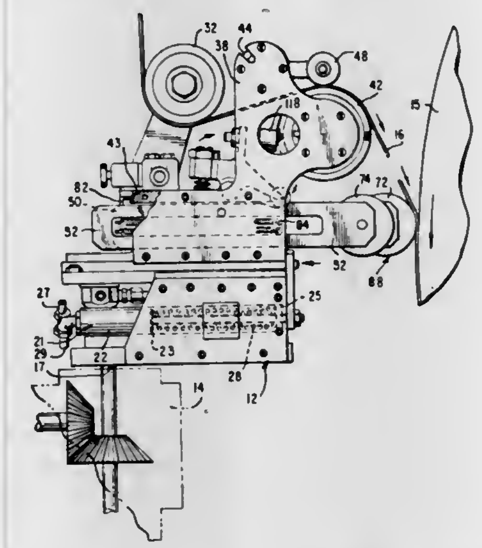

1. A method of applying and stitching a tape (16) onto a body (15) comprising the steps of supplying a tape (16) to an applicator roller (42) in contact with the moving body (15), stitching said tape (16) to said body (15) by passing stitching rollers (72) over said tape (16) in contact with said body (15), stopping rotation of the body (15) upon completion of the buildup of the layer of tape (16) on the body (15), retracting the applicator roller (42) from the body (15) while substantially simultaneously, applying a brake (94) to the applicator roller (42) to stop advancing said tape (16) to the body (15), moving said body (15) that is still in contact with the stitching rollers (72) to stretch the tape (16) between the braked applicator roller (42) and the stitching rollers (72) until said tape breaks somewhere between said applicator roller and said stitching rollers.

4,371,411
METHOD OF ADHERING UNVULCANIZED RUBBER TO VULCANIZED RUBBER THROUGH VULCANIZATION
Toshio Honda, Akigawa; Yukio Fukuura, Kodaira; Hikaru Ishikawa, Kokubunji; Shozo Kojima, Higashimurayama; Itsuo Tanuma, Tokorozawa, and Masao Ogawa, Kawagoe, all of Japan, assignors to Bridgestone Tire Company Limited, Tokyo, Japan
Continuation of Ser. No. 43,961, May 30, 1979, abandoned. This application Sep. 19, 1980, Ser. No. 188,784
Claims priority, application Japan, May 30, 1978, 53-63769
Int. Cl.³ B32B *31/00*
U.S. Cl. 156—281 **10 Claims**

1. A method of adhering an unvulcanized rubber sheet to a vulcanized rubber article through vulcanization, comprising disposing an unvulcanized rubber sheet, whose rubber component consists essentially of 30–70% by weight polybutadiene rubber, 10–40% by weight of styrene-butadiene rubber and 10–50% by weight of at least one of natural rubber and polyisoprene rubber, on the surface of a vulcanized rubber article containing at least 80% by weight, based on the amount of its rubber component, of at least one rubber selected from natural rubber, polybutadiene rubber and styrene-butadiene rubber, and then vulcanizing the unvulcanized rubber sheet, wherein treatment of said vulcanized rubber article prior to said vulcanizing consists of wiping off stains on the surface of said vulcanized article.

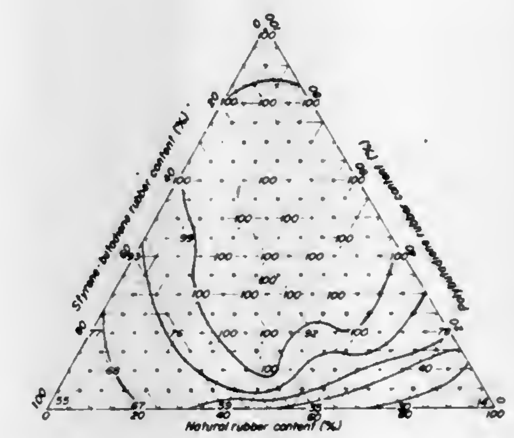

4,371,412
DRY ETCHING APPARATUS
Junichi Nishizawa, Sendai, Japan, assignor to Zaidan Hojin Handotai Kenkyu Shinkokai, Sendai, Japan
Division of Ser. No. 924,066, Jul. 12, 1978, Pat. No. 4,233,109, which is a continuation-in-part of Ser. No. 759,120, Jan. 13, 1977, abandoned. This application Jul. 3, 1980, Ser. No. 166,700
Claims priority, application Japan, Jan. 16, 1976, 51-4469; Aug. 27, 1976, 51-102825; Aug. 27, 1976, 51-102826
Int. Cl.³ C23F *1/02;* **H01L** *21/312*
U.S. Cl. 156—345 **8 Claims**

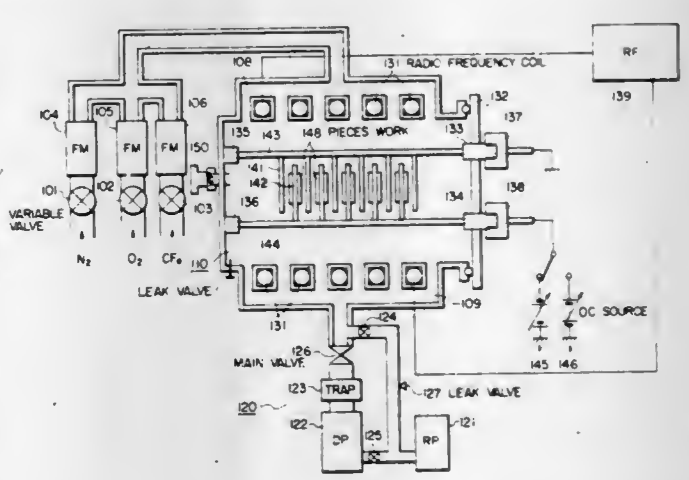

1. A dry etching apparatus comprising:
a hermetic processing chamber formed with a material inactive on a plasma gas;
a pair of electrode groups for applying a DC voltage therebetween, each group including a plurality of electrode plates, the electrode plates of respective groups being disposed alternately to form a plurality of parallel electrodes;
two supporting rods for supporting said respective groups of electrode plates, at least one of said rods being slidable along and rotatable about its axis;
a DC electric source connected between said pair of electrode groups for applying a DC voltage therebetween;
a RF coil and a RF power source for exciting a plasma gas;
a plurality of gas inlets formed through said hermetic processing chamber along the axis of said supporting rod for introducing a gas for generating a plasma gas substantially parallel with said electrode plates.

4,371,413

APPARATUS FOR APPLYING TRANSVERSE WELD OR WELD-SEVERING SEAMS TO A WEB OF THERMOPLASTIC OR HOT-SEALABLE MATERIAL

Friedhelm Mundus, Lengerich of Westphalia, Fed. Rep. of Germany, assignor to Windmoller & Holscher, Lengerich of Westphalia, Fed. Rep. of Germany

Filed Jul. 7, 1981, Ser. No. 281,166

Claims priority, application Fed. Rep. of Germany, Jul. 9, 1980, 3026038

Int. Cl.³ B32B *31/20*

U.S. Cl. 156—349 **2 Claims**

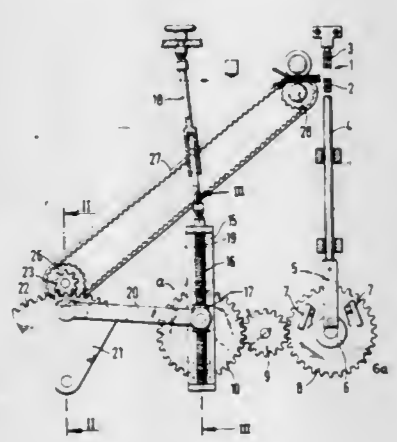

1. Device for application of transverse weld or weld-severing seams to a web of material comprising:
a pair of welding jaws, one of which is reciprocatable;
crank drive means for reciprocating said one jaw and having a rotatable shaft, rod means moved by said crank shaft for moving said one jaw, and a cam plate secured to said crank shaft;
contact means actuatable by said cam plate during rotation of said crank shaft for producing control signals;
a gear (10) carrying a crank pin;
first drive means for interconnecting said crank shaft and said gear (10) so that said gear (10) is rotatably driven by said crank shaft and rotates at the same speed as said crank shaft;
a swing arm having a longitudinally-extending slot formed therein receiving said crank pin so that said crank pin is longitudinally displaceable therein and said swing arm is oscillated by rotation of said gear (10);
a shaft supporting said swing arm for pivotal movement;
a coupling rod having one end connected to said swing arm so that said coupling rod is movable by said swing arm;
a gear wheel segment connected to a second end of said coupling rod so that the gear wheel segment is oscillated by said swing arm;
feed roller means having a driving movement for feeding the web with respect to the welding jaws;
second drive means for interconnecting said gear wheel segment and said feed roller means so that said gear wheel segment rotates said feed roller means thereby providing said driving movement;
clutch-brake unit means responsive to said control signals for controlling driving movement of said feed roller means, said clutch-brake unit means being movable between a coupling position in which said feed roller means are driven by said gear wheel segment and an uncoupling position in which the feed roller means are uncoupled from said gear wheel segment,
said gear (10) being positioned with respect to said shaft of said swing arm such that driving movement of said feed rollers occurs during rotation of said gear (10) through a sector facing away from said shaft.

4,371,414

CONTROL SYSTEM FOR A CONTINUOUSLY OPERATING PRESS

Karl-Heinz Ahrweiler, Krefeld, Fed. Rep. of Germany, assignor to Eduard Küsters, Krefeld, Fed. Rep. of Germany

Continuation of Ser. No. 912,983, Jun. 6, 1978, abandoned. This application Dec. 18, 1981, Ser. No. 332,182

Claims priority, application Fed. Rep. of Germany, Jun. 7, 1977, 2725640

Int. Cl.³ B30B *5/06*

U.S. Cl. 156—361 **3 Claims**

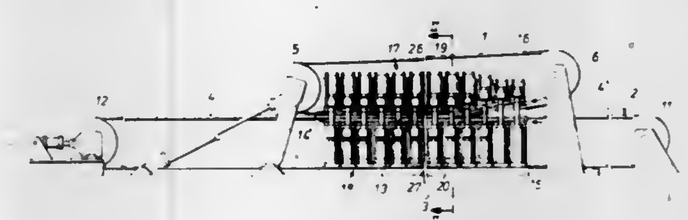

1. In a control system for a continuously operating press, for the manufacture of chipboard, molded laminated plastic and the like, having two endless revolving forming belts which advance opposite each other in a pressing section, between which a starting material is compressed in the pressing section and each of which belts is provided with a separate drive, one of the drives being a lead drive equipped with a speed control for holding the belt velocity constant, the improvement comprising:
(a) a torque controller for comparing the torque of the lead drive with the torque of the other drive and providing an output which regulates the torque of the other drive such that the torques of the two drives always retain an adjustable ratio between each other over the entire torque range; and
(b) a further speed control for the belt drive which is not operating as the lead drive which is set higher than the speed control of the lead drive and which is adapted to be adjusted along with the speed control of the lead drive, with the speed ratio remaining the same.

4,371,415

PROCESS FOR MANUFACTURING SYNTHETIC RESIN HOSE HAVING A REINFORCING MEMBER EMBEDDED THEREIN AND APPARATUS THEREOF

Kenichi Tanaka, Musashino, Japan, assignor to Kakuichi Co. Ltd., Nagano, Japan

Continuation of Ser. No. 188,702, Sep. 19, 1980, Pat. No. 4,326,905, which is a continuation of Ser. No. 968,753, Dec. 13, 1978, abandoned, which is a division of Ser. No. 902,825, May 4, 1978, Pat. No. 4,194,942. This application May 22, 1981, Ser. No. 266,334

Claims priority, application Japan, Oct. 15, 1977, 52-122967

The portion of the term of this patent subsequent to Mar. 25, 1997, has been disclaimed.

Int. Cl.³ B29D *23/05;* **B32B** *31/00*

U.S. Cl. 156—433 **6 Claims**

1. An apparatus for manufacturing a synthetic resin hose having a tubular reinforcing member embedded therein, comprising:
a plurality of bobbin creels for guiding warp material;
warp treating means for applying a bonding agent to said warp materials by means of a guide roller in a bonding agent tub;
a hollow cylindrical member having diameter adjusting discs provided with yarn guide holes for guiding a plurality of binding agent bearing warps to the outer peripheral surface of a hollow cylindrical member;
means for guiding warps through said yarn guide holes to the outer peripheral surface of a hollow cylindrical member for forming a tubular member of warps lying parallel to each other parallel to the axis of the tubular member;
a braiding machine surrounding said hollow cylindrical

member for weaving braiding yarns into a braided member on the outer periphery of said tubular warp member formed by a plurality of warps guided to the outer periph-

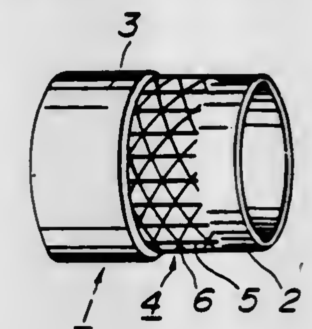

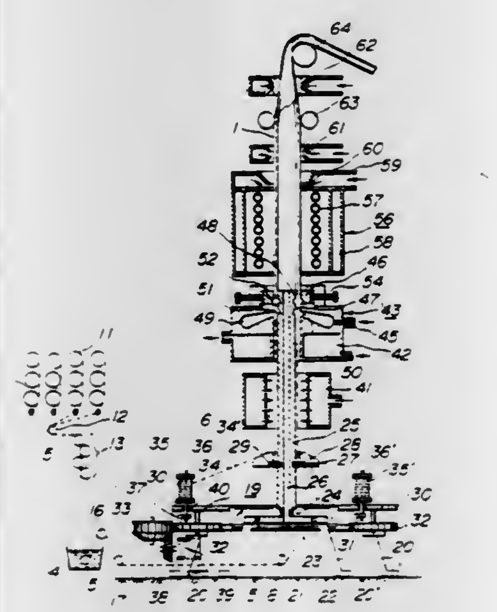

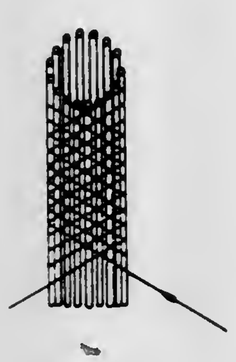

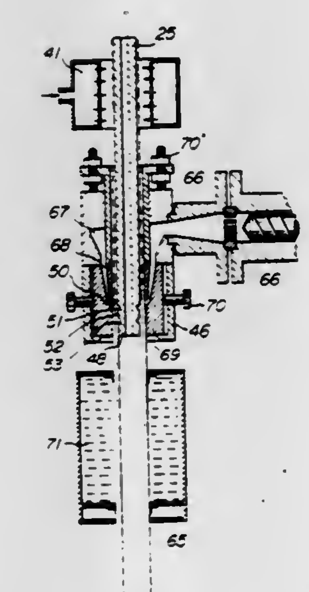

eral surface of the hollow cylindrical member and mutually aligned in parallel relation in the tubular member;
means for weaving a plurality of braiding yarns into a braid member consecutively in overlying relation around the outer peripheral surface of said warp tubular member thereby preparing a tubular reinforcing member;
a first heating unit surrounding said hollow cylindrical member for bonding the tubular warp member to the braided member at the contacts therebetween for heat-setting a tubular reinforcing member consisting of the warp tubular member and the braided member;
a first cooling unit provided adjacent said first heating unit for solidifying said tubular reinforcing member;
a resin applying unit having a manifold and die for coating synthetic resin onto the inner and outer peripheral surface of said tubular reinforcing member;
a second heating unit for gelation of synthetic resin coated to said tubular reinforcing member;
a second cooling unit for air-cooling the composite tubular synthetic resin hose with embedded tubular reinforcing member; and
means for taking up said synthetic resin hose to a winding-up reel under a constant tension;
wherein said hollow cylindrical member has a tapered portion surrounded by the first heating unit for ensuring the smooth upward movement of said tubular reinforcing member along the outer peripheral surface of the hollow cylindrical member, the degree of taper being relating to the thermal shrinkage percentage of the braiding yarns used; and
said member, said machine, said means and said units are arranged in the order described successively from one end of the hollow cylindrical member to said winding-up reel.

4,371,416

SUBASSEMBLY COMBINATION FOR MAIL PROCESSING MACHINES

Horst Denzin, Berlin, Fed. Rep. of Germany, assignor to Francotyp GmbH, Berlin, Fed. Rep. of Germany

Filed Nov. 19, 1980, Ser. No. 208,431

Claims priority, application Fed. Rep. of Germany, Nov. 30, 1979, 2948928

Int. Cl.³ B29H *9/00*

U.S. Cl. 156—441.5 **3 Claims**

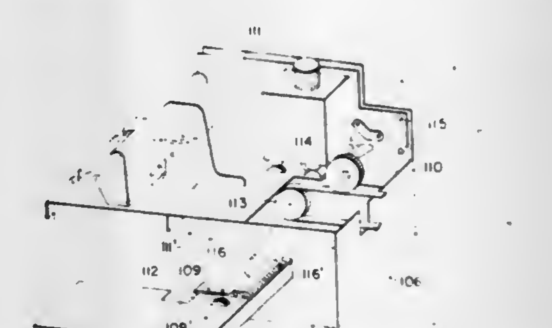

1. Subassembly combination for mail processing machines, comprising a letter feeding machine, and a moistening device having a rotatable drum for moving mail-wetting liquid and a sealing device being mountable on said letter feeding machine, said letter feeding machine having a transport cylinder for transporting mail, a common drive gear for said letter feeding machine, moistening device and sealing device, and a common shaft on which said transport cylinder and drive gear are mounted, a serrated belt disposed on said common drive gear for selectively driving said sealing device and said rotating drum said sealing device including a transport wheel for transporting mail, a mail sealing cylinder, two gears being rotatable by said serrated belt, a first shaft on which said transport wheel and one of said two gears is mounted, and a second shaft on which said sealing cylinder and another of said two gears is mounted, said moistening and sealing devices being attachable

to and detachable from said letter feeding machine independently of the operation of said letter feeding machine.

4,371,417
DIFFERENTIALLY STRETCHED ELASTIC
Richard H. Frick, Neenah; Randolph J. Hill, Appleton, and David R. Roland, Winneconne, all of Wis., assignors to Kimberly-Clark Corporation, Neenah, Wis.
Filed Oct. 1, 1981, Ser. No. 307,423
Int. Cl.³ B32B *31/08*
U.S. Cl. 156—495 **9 Claims**

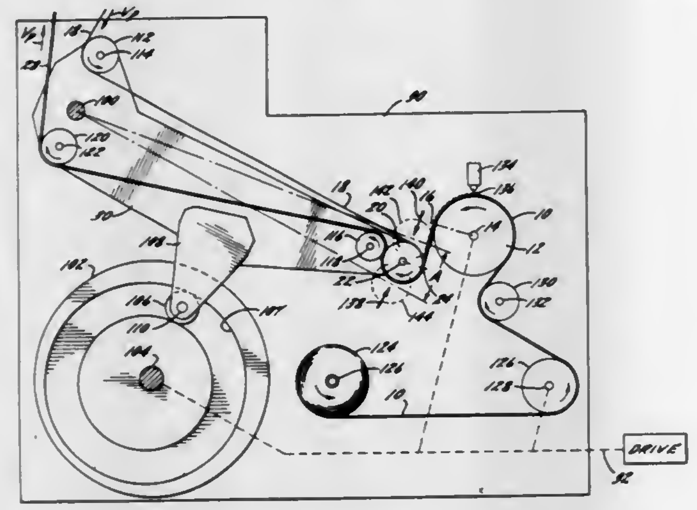

1. In an apparatus for attaching elastic strips in elastic leg disposable diapers having elasticized leg openings during the manufacture of such diapers moving in serially-interconnected form in an assembly machine and including means for feeding continuous elastic strips into desired positions in the diaper for adhesive attachment continuously along the longitudinal edges of the diapers and means for alternately stretching and relaxing predetermined lengths of the elastic strips during the feeding thereof for attaching the stretched lengths to the crotch area and substantially relaxed lengths to the outer waist areas; the improvement of said means for alternately stretching and relaxing predetermined lengths of the continuous elastic strips comprising:

(a) a movable guiding means for guiding the flow of the serially-interconnected diaper material along a predefined but movable path, and

(b) periodic driving means connected to the movable guiding means for periodically displacing the predefined path of the serially-interconnected diaper material with respect to the means for feeding the continuous elastic strips,

thereby alternately relaxing and stretching the elastic fed to and bonded to the diaper material.

4,371,418
FEEDING WEB MATERIAL
Wladyslaw H. Krywiczanin, Fairoak, and William Lumsden, Winchester, both of England, assignors to British-American Tobacco Company Limited, London, England
Filed Dec. 8, 1981, Ser. No. 328,674
Claims priority, application United Kingdom, Dec. 22, 1980, 8041062
Int. Cl.³ B31F *5/06*, B65H *19/18*
U.S. Cl. 156—497 **5 Claims**

1. Web-splicing apparatus comprising a web splicer and, associated therewith, an air mover and web-presentation means operable to present to the inlet end of the air mover the leading end of a first web extending from a reel and the leading end of a second web extending from another reel, which air mover is operable to feed the leading end of said first web from said presentation means to and in a path through a splicing zone of the said splicer, to serve as a guide for subsequent continuous passage of that web, and further operable to feed the leading end of the second said web from said presentation

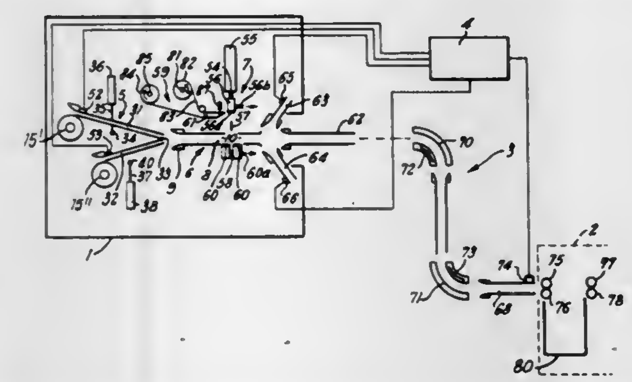

means to said splicing zone during continuous passage of the first web through the air mover.

4,371,419
METHOD FOR PRODUCING A LITHIUM TANTALATE SINGLE CRYSTAL
Tsuguo Fukuda, Yokohama, and Hitoshi Hirano, Kanagawa, both of Japan, assignors to Tokyo Shibaura Electric Co., Ltd., Kawasaki, Japan
Continuation of Ser. No. 892,897, Apr. 3, 1978, abandoned, which is a continuation-in-part of Ser. No. 776,204, Mar. 10, 1977, Pat. No. 4,144,117. This application Jan. 25, 1980, Ser. No. 115,195
Claims priority, application Japan, Mar. 17, 1976, 51-28173
The portion of the term of this patent subsequent to Mar. 13, 1996, has been disclaimed.
Int. Cl.³ C30B *15/10*
U.S. Cl. 156—617 SP **11 Claims**

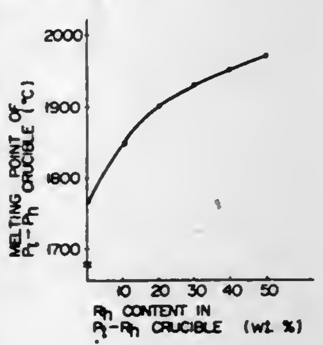

1. A method for producing a lithium tantalate single crystal comprising:

establishing a melt consisting essentially of lithium tantalate in a platinum-rhodium crucible consisting essentially of between 80% by weight and 65% platinum and between 20% and 35% rhodium,

contacting a seed crystal of lithium tantalate with said melt, and

pulling the seed crystal away from the melt to grow a lithium tantalate single crystal.

4,371,420
METHOD FOR CONTROLLING IMPURITIES IN LIQUID PHASE EPITAXIAL GROWTH
David A. Stevenson, Los Altos Hills, Calif., assignor to The United States of America as represented by the Secretary of the Navy, Washington, D.C.
Filed Mar. 9, 1981, Ser. No. 241,997
Int. Cl.³ C30B *9/04*
U.S. Cl. 156—624 **12 Claims**

1. In a process for growth of a layer of undoped semiconductor material by precipitation from a solution of the semiconductor material in a solvent by liquid phase epitaxial growth,

the improvement comprising the step of adding from approximately 0.01% to 1.0% by weight of a material which forms an

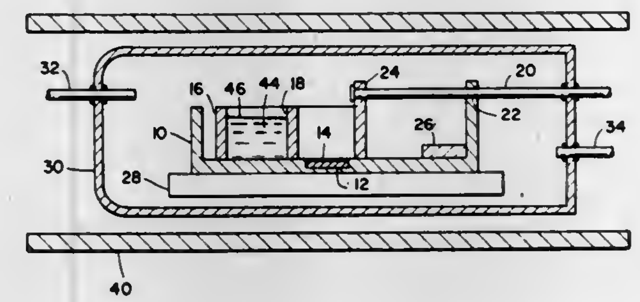

oxide and is soluble in the solvent to the solution prior to the step of precipitating said layer of semiconductor material.

4,371,421
LATERAL EPITAXIAL GROWTH BY SEEDED SOLIDIFICATION
John C. C. Fan, Chestnut Hill; Michael W. Geis, Acton, and Bor-Yeu Tsaur, Arlington, all of Mass., assignors to Massachusetts Institute of Technology, Cambridge, Mass.
Filed Apr. 16, 1981, Ser. No. 254,871
Int. Cl.³ C30B *19/00*
U.S. Cl. 156—624 **16 Claims**

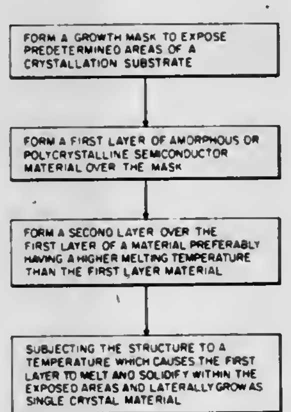

1. A method of forming a semiconductor body comprising:

a. forming a first layer of amorphous or polycrystalline material over a substrate;

b. disposing a single crystalline seed material adjacent a surface of said first layer;

c. forming a second layer over a substantial portion of said first layer;

d. heating said first layer to melt the first layer;

e. solidifying the first layer to transform the first layer material to large grain substantially single crystal material, the crystallinity of said first layer being influenced by the seed material.

4,371,422
CONTINUOUS PROCESSING OF PRINTED CIRCUIT BOARDS
Charles D. Eidschun, Clearwater, Fla., assignor to Micro-Plate, Inc., Clearwater, Fla.
Filed Oct. 15, 1980, Ser. No. 197,073
Int. Cl.³ H01L *21/306*; C23F *1/02*
U.S. Cl. 156—640 **7 Claims**

1. The method for continuous processing of printed circuit boards suspended by a hanger to remove the photoresist and final etch the copper cladding therefrom comprising the steps of,

conveyorizing the printed circuit board suspended from a hanger for continuous horizontal transport while each such printed circuit board is in a vertical plane,

providing a plurality of chambers each having slotted end members for passing the printed circuit boards as they are horizontally conveyed by the conveyorizing of the workpieces,

the chambers being provided with interior spray means for directing an operative fluid against the printed circuit boards,

each chamber having a substantially imperforate cover which is slotted,

positioning each hanger on a conveyor which is above the shielded slots and external to the chamber,

shielding the slots by substantially imperforate means for shielding the slots which are carried by the printed circuit

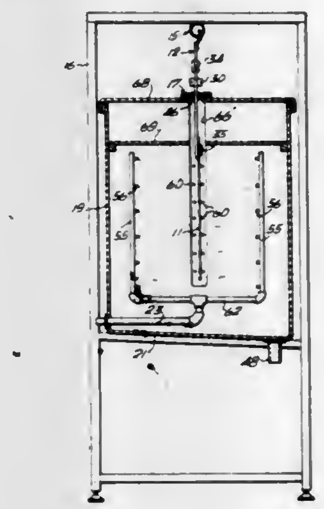

board hangers closely adjacent the slotted covers for each chamber,

activating one chamber with a photoresist remover,

activating another sequential chamber with a rinse for such printed circuit boards,

activating a further chamber with an etch for the cladding remaining on the printed circuit boards,

activating a further chamber to rinse the etched boards,

whereby the photoresist and copper cladding are removed from the printed circuit boards while the same are continuously transported horizontally but remaining in a vertical plane in an environmentally shielded series of chambers.

4,371,423
METHOD OF MANUFACTURING SEMICONDUCTOR DEVICE UTILIZING A LIFT-OFF TECHNIQUE
Rokuro Yoshizawa, Neuss, Fed. Rep. of Germany, and Satoshi Shinozaki, Yokohama, Japan, assignors to VLSI Technology Research Association, Japan
Filed Sep. 3, 1980, Ser. No. 183,813
Claims priority, application Japan, Sep. 4, 1979, 54-113231; Sep. 4, 1979, 54-113232
Int. Cl.³ H01L *21/283*, *21/308*
U.S. Cl. 156—653 **16 Claims**

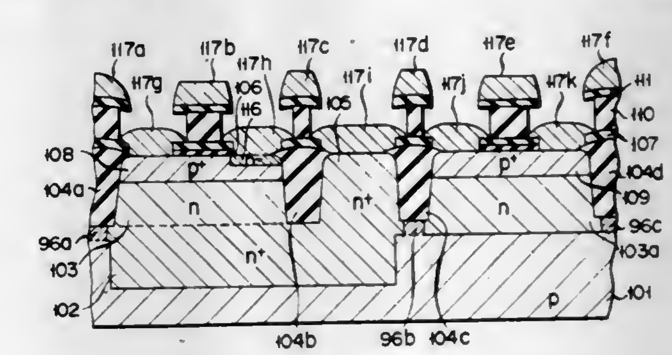

1. A method of manufacturing a semiconductor device, comprising:

forming a first film on one principal surface of a semiconductor substrate having a plurality of semiconductor regions formed therein, said regions being isolated by separation walls;

forming a second film covering said first film, said second film having an etching characteristic different from that of said first film;

forming a first deposition layer on said second film, said first deposition layer having a higher etching speed than that of said second film when etched with a selected etchant;

forming a second deposition layer on said first deposition layer, said second deposition layer having a lower etching speed than that of said first deposition layer when etched with said selected etchant;

selectively etching preselected portions of said second and first deposition layers and said second film in succession, thereby exposing segments of said first film, said preselected portions corresponding to desired wiring patterns for said plurality of semiconductor regions of the device;

selectively side etching additional portions of said first deposition layer by etching said additional portions with said selected etchant at a higher etching speed than that of said second film and said second deposition layer;

etching the exposed segments of said first film with said selected etchant to form contact holes corresponding to said plurality of semiconductor regions, the etching of said exposed segments being performed simultaneously with said side etching of said first deposition layer;

then depositing a wiring metal on said contact holes from above said second deposition layer, the unetched portions of said second deposition layer comprising a deposition mask upon which portions of the wiring metal are deposited; and

then removing the remaining portions of said first deposition layer by etching, thereby lifting off the remaining portions of said second deposition layer and the portions of the wiring metal deposited thereon.

4,371,424

LATENT HEAT RECIRCULATING SYSTEM

Myron L. Anthony, Grand Junction, Colo., assignor to Sax Zzyzx, Ltd., Clifton, Colo.

Division of Ser. No. 169,441, Jul. 16, 1980, Pat. No. 4,294,664. This application Jun. 22, 1981, Ser. No. 276,073

Int. Cl.³ B01D *3/14*

U.S. Cl. 202—159 **20 Claims**

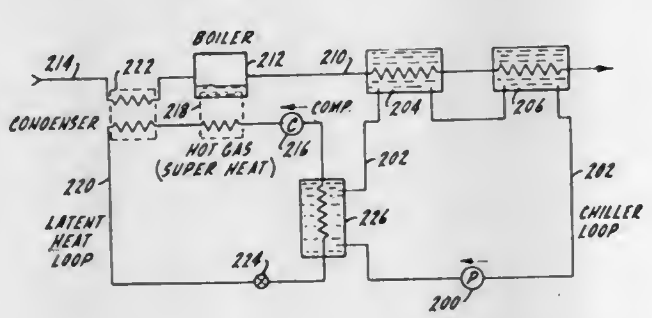

1. Apparatus for conserving energy while processing a process material in a process stream to recover its latent heat for return to the process stream and comprising:

(1) means providing an open process stream having a first heat accepting means and a first heat rejecting means;

(2) means providing a closed refrigerator loop having second heat accepting means and second heat rejecting means;

(3) means providing a closed chiller loop having third heat accepting means and third heat rejecting means;

(4) means for indirectly exchanging heat between said second heat accepting means and said third heat rejecting means;

(5) means for indirectly exchanging heat between said first heat rejecting means and said third heat accepting means; and

(6) means for indirectly exchanging heat between said second heat rejecting means and said first heat accepting means,

thereby enabling said latent heat to be passed to the chiller loop and from there to the refrigerator loop for exchange back to the process stream, and allowing adjustments to be made in the refrigerator loop for efficiency and performance without necessarily effecting the chiller loop.

4,371,425

SHAFT-LIKE DRY COOLER FOR COKE

Wilhelm Danguillier, Bochum; Wolfgang Grams, Herne, and Jürgen Tietze, Bochum, all of Fed. Rep. of Germany, assignors to Dr. C. Otto & Comp. G.m.b.H., Bochum, Fed. Rep. of Germany

Filed Apr. 17, 1981, Ser. No. 255,231

Claims priority, application Fed. Rep. of Germany, May 16, 1980, 3018814

Int. Cl.³ C10B *39/02*

U.S. Cl. 202—228 **5 Claims**

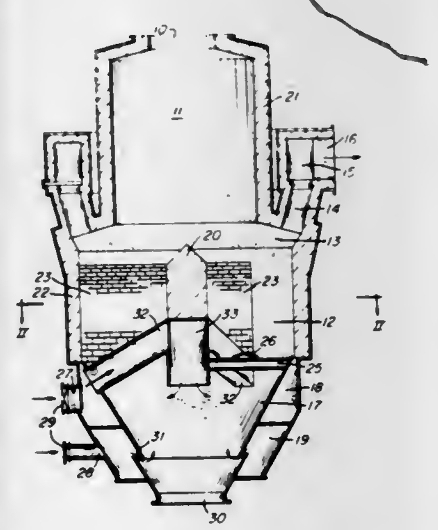

1. A shaft-like cooler for dry cooling of coke with gases conveyed through the coke, said cooler having the combination of a top antechamber having a coke-charging opening in the top thereof, a cooling chamber below said top antechamber and including an inlet for cooling gases and a coke outlet at the bottom end thereof, said cooling chamber further including three generally vertical walls extending radially to divide said cooling chamber into three uniform shaft components, a central masonry core joining said radial walls together, a flow diverting prop disposed in each of said uniform shaft components, a masonry core centrally disposed in said cooling chamber on said vertical walls, said inlet for cooling gases including a pipe having a downwardly-directed discharge opening underneath said masonry core to form planes in descending coke for cooling gases to enter the coke, and a cylindrical wall including a gas outlet between said antechamber and said cooling chamber.

4,371,426

CONTROL OF A FRACTIONAL DISTILLATION PROCESS

Robert J. DiBiano, and James W. Hobbs, both of Sweeny, Tex., assignors to Phillips Petroleum Company, Bartlesville, Okla.

Filed Aug. 17, 1981, Ser. No. 293,065

Int. Cl.³ B01D *3/42*

U.S. Cl. 203—2 **12 Claims**

7. A method for controlling a fractional distillation process in which heat is utilized to separate first and second components contained in a feed stream flowing to a fractional distillation column, wherein said first component is principally removed from said fractional distillation column as an overhead vapor stream, wherein said overhead vapor stream is at least partially condensed with a first portion of the condensate being returned to an upper portion of said fractional distillation column as an external reflux and a second portion of said condensate being removed from said fractional distillation process as an overhead product, and wherein said second component is principally removed from said fractional distillation column as a bottoms product, said method comprising the steps of:

establishing a first signal representative of the concentration of said second component in said overhead product;

establishing a second signal representative of the desired concentration of said second component in said overhead product;

comparing said first signal and said second signal and establishing a third signal which is responsive to the difference between said first signal and said second signal;

manipulating the heat supplied to said fractional distillation column in response to said third signal;

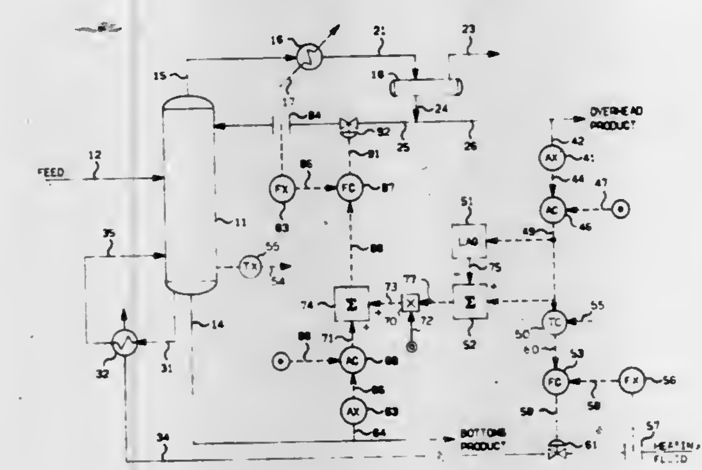

establishing a bias signal in response to said third signal;

establishing a fourth signal which is representative of the actual concentration of said first component in said bottoms product stream;

establishing a fifth signal which is representative of the desired concentration of said first component in said bottoms product stream;

comparing said fourth signal and said fifth signal and for establishing a sixth signal which is responsive to the difference between said fourth signal and said fifth signal;

summing said bias signal and said sixth signal to establish a seventh signal; and

manipulating the flow rate of said external reflux in response to said seventh signal.

4,371,427

EXTRACTIVE DISTILLATION

Raymond E. Holler, and Loyal E. Henson, both of Bartlesville, Okla., assignors to Phillips Petroleum Company, Bartlesville, Okla.

Filed Jun. 16, 1981, Ser. No. 273,559

Int. Cl.³ B01D *3/42*

U.S. Cl. 203—3 **14 Claims**

13. In an extractive distillation process comprising

(a) introducing a hydrocarbon feed comprising a first component and a second component to be separated into an extractive distillation column,

(b) extractively distilling said hydrocarbon together with a stream of an extractive agent comprising a selective solvent and a required effective concentration of water in said extractive distillation column such as to form a first overhead stream and a first bottom stream,

(c) recovering said first component and a first stream of liquid water from said first overhead stream,

(d) introducing said first bottom stream into a stripper,

(e) introducing steam into the lower portion of said stripper,

(f) withdrawing a second overhead stream from said stripper,

(g) withdrawing a second bottom stream from said stripper,

(h) separating a second stream of liquid water from said second overhead stream,

(i) evaporating water from said second stream of liquid water and using the so evaporated water as said steam,

(j) withdrawing a selected solvent stream from said stripper, the improvement comprising

(k) introducing said second stream of liquid water and at least a portion of said first stream of liquid water into a water tank having a level controller associated therewith

which is capable of generating a level control signal responsive to the level of water in said tank,

(l) withdrawing a flow controlled stripper water stream and a distillation water stream from said water tank under conditions so that said effective concentration of water in said distillation water stream is controlled responsive to said level control signal,

(m) combining said selective solvent stream, any remainder of said first stream of liquid water and said distillation water stream to form said stream of said extractive agent.

4,371,428

SEPARATING VINYLTOLUENE FROM OTHER ALKENYLAROMATICS

John C. Montagna, O'Hara Township, Allegheny County; Robert D. Galli, New Kensington, both of Pa., and John Freel, Parker, Colo., assignors to Gulf Research & Development Company, Pittsburgh, Pa.

Filed Nov. 24, 1980, Ser. No. 209,596

The portion of the term of this patent subsequent to Jul. 28, 1998, has been disclaimed.

Int. Cl.³ B01D *3/40*

U.S. Cl. 203—51 **13 Claims**

1. The method of separating vinyltoluene in admixture with at least one close-boiling mono-olefinically unsaturated alkylaromatic compound by extractive distillation which comprises distilling said mixture comprising vinyltoluene and at least one close-boiling mono-olefinically unsaturated alkylaromatic compound in the presence of at least one liquid oxygen-containing, sulfur-containing or nitrogen-containing organic polar compound having a boiling point at 760 mm Hg of between about 185° and about 300° C., recovering a vapor phase rich in said close-boiling mono-olefinically unsaturated alkylaromatic compound and recovering a bottoms fraction comprising vinyltoluene and said organic polar compound.

4,371,429
TIMEPIECE HAND MANUFACTURING METHOD
Tadao Enomoto, and Hidefumi Kasai, both of Tanashi, Japan, assignors to Citizen Watch Company Limited, Tokyo, Japan
Filed Aug. 19, 1981, Ser. No. 294,112
Claims priority, application Japan, Aug. 25, 1980, 55-116720
Int. Cl.³ C25D *1/20*
U.S. Cl. 204—4 **5 Claims**

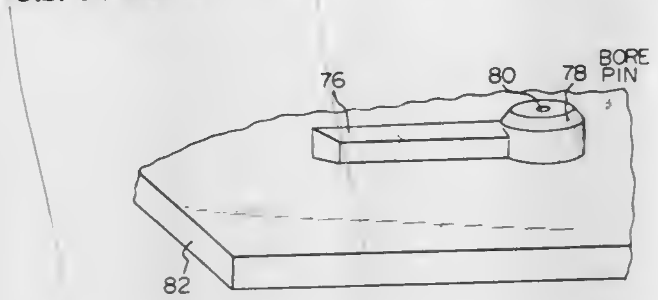

1. A method of forming a timepiece hand, comprising the steps of:
preparing a plastic matrix having a concave portion formed therein, with at least a part of said concave portion being formed into a shape which corresponds to that of a surface of said timepiece hand, said plastic matrix further having a convex portion formed to peripherally surround said concave portion;
forming a layer of electrically conductive material over said concave and convex portions of said plastic matrix;
partially removing said layer of electrically conductive material by grinding an uppermost area of said peripheral convex portion of said plastic matrix;
performing electro-forming to form a layer of a hard metal over the remaining areas of said layer of electrically conductive material;
performing grinding of an uppermost area of said peripheral convex portion of said plastic matrix to remove said layer of electrically conductive material and layer of electro-formed hard metal therefrom, whereby an uppermost area of said peripheral convex portion of said plastic matrix forming a continuous path around said concave portion of said plastic matrix which is completely exposed from said layer of electrically conductive material and said electro-formed layer of hard metal; and
immersing said peripheral convex portion of said plastic matrix in an organic solvent, to thereby dissolve and remove portions of said plastic matrix around said concave region thereof, whereby a timepiece hand comprising said layer of electrically conductive material and said electro-forming layer of hard metal formed on said concave portion becomes separated from said plastic matrix.

4,371,430
ELECTRODEPOSITION OF CHROMIUM ON METAL BASE LITHOGRAPHIC SHEET
John A. Ballarini, and Timothy A. Hetland, both of Racine, Wis., assignors to Printing Developments, Inc., Racine, Wis. Continuation-in-part of Ser. No. 34,179, Apr. 27, 1979, abandoned. This application Apr. 11, 1980, Ser. No. 134,636
Int. Cl.³ C25D *5/44;* **G03C** *1/94*
U.S. Cl. 204—32 R **14 Claims**

1. In the direct electrodeposition of chromium on the surface of a metal substrate, the steps of
immersing said metal substrate in a controlled temperature grainer bath consisting of water and a bifluoride selected from the group consisting of ammonium bifluoride and sodium bifluoride and in a concentration of about 4 to 16 ounces of selected bifluoride per gallon of water, for at least 10 seconds;
immersing said bifluoride grained metal substrate with no intervening treatment other than optional rinsing in a plating bath selectively constituted of water, chromic oxide and sulfuric acid in amounts to maintain a CR^{+6}/SO_4^{-2} ratio in the range of about 75 to 180;

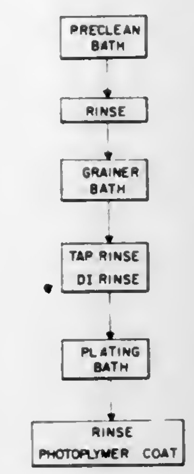

and exposing said immersed metal substrate in said plating bath to a plating current in the range of 300 to 1000 amperes per square foot for at least 30 seconds.

4,371,431
PHOTOELECTROCHEMICAL GENERATION OF THALLIUM(III)
Jay A. Switzer, Placentia, and Eric L. Moorehead, Diamond Bar, both of Calif., assignors to Union Oil Company of California, Brea, Calif.
Filed Oct. 9, 1981, Ser. No. 310,310
Int. Cl.³ C25B *3/00, 5/00*
U.S. Cl. 204—59 R **35 Claims**

1. A method for producing thallium(III) in solution which comprises:
(a) placing a solution containing thallium(I) into a photoelectrochemical cell fitted with a semiconductor photoelectrode and a counter electrode, said photoelectrode and counter electrode having an electrical interconnection external to said cell; and
(b) exposing said photoelectrode to actinic radiation, generating a flow of current in said cell.

4,371,432
METHOD OF AND APPARATUS FOR ELECTROEROSIVE PRODUCTION OF PROFILED SURFACES
Yanko P. Kyuchukov, Varna, Bulgaria, assignor to UPZ kam Vimmess, Russe, Bulgaria
Filed Feb. 25, 1981, Ser. No. 238,125
Int. Cl.³ B23P *1/04, 1/12;* **B23K** *9/16*
U.S. Cl. 204—129.35 **5 Claims**

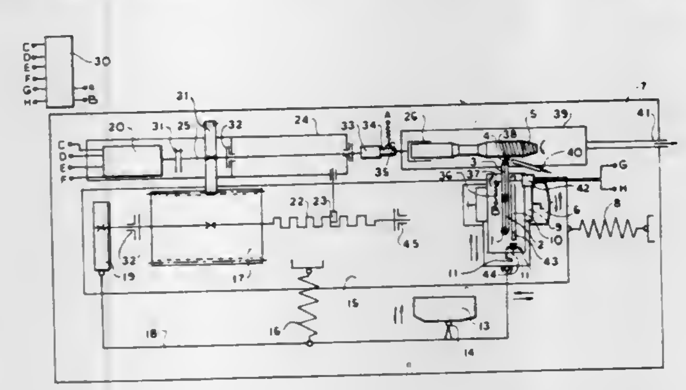

5. A method for the production of shaped surfaces or workpieces by electroerosive machining at a machining zone, comprising feeding a flexible continuous round wire electrode toward the machine zone, and deforming the initially round electrode in a roll pass while it is being continuously fed to a second shape in cross-section having at least one angle while it is being thus fed and before it reaches the machining zone.

4,371,433
APPARATUS FOR REDUCTION OF SHUNT CURRENT IN BIPOLAR ELECTROCHEMICAL CELL ASSEMBLIES
Edward N. Balko, Wilmington, Mass., and Lawrence C. Moulthrop, Stratham, N.H., assignors to General Electric Company, Wilmington, Mass.
Filed Oct. 14, 1980, Ser. No. 195,920
Int. Cl.³ C25B *15/06, 15/08, 9/00;* **H01M** *8/24*
U.S. Cl. 204—228 **5 Claims**

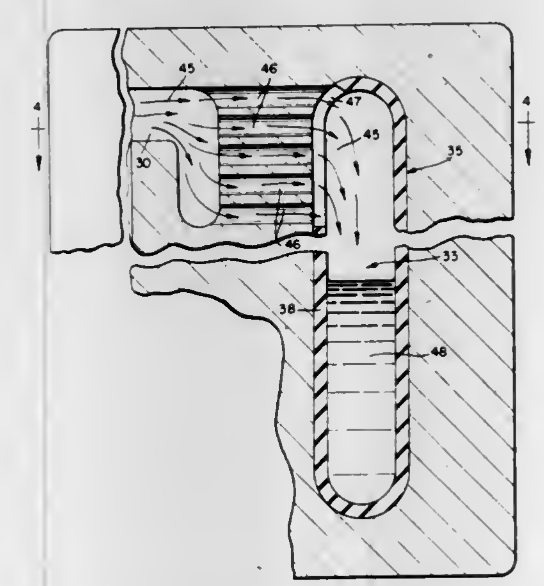

1. An electrochemical cell assembly comprising a plurality of electrochemical cells stacked together in an electrically series connected arrangement, each cell comprising:
(a) an ion exchange membrane positioned between and in contact with catalytic electrodes,
(b) a plurality of electrically conductive bipolar plates separating adjacent membranes, each of said plates having a plurality of electrode contacting projections on opposite faces which define a plurality of fluid distributing channels, each bipolar element contacting the electrodes associated with adjacent membranes,
(c) outlet manifold means in each of the bipolar elements communicating with the fluid distributing channels and aligned with the outlet manifold means in each of the remaining bipolar elements to form a common outlet manifold means for the cell assembly,
(d) means for introducing a conductive fluid to each cell which passes through the fluid distributing channels and into contact with an electrode, with excess fluid passing out of the cell into the outlet manifold means,
(e) means for preventing shunt current flow between cells and through the conductive fluid in the the manifolds, comprising elastomeric insulating means having a main body portion lining the manifold walls of each bipolar element, said main body having a pair of flange members extending therefrom and overlapping the flange members of the insulating means mounted on the adjacent bipolar plate to form a fluid-tight seal between adjacent plates and to prevent current flow between conductive manifold walls through the conductive fluid in the common manifold.

4,371,434
DEGASSER-DEHYDRATOR
Eugene L. Clarke, Rome, Italy, assignor to Petrolite Corporation, St. Louis, Mo.
Filed Jun. 22, 1981, Ser. No. 276,404
Int. Cl.³ B01D *17/04, 17/06, 19/00*
U.S. Cl. 204—302 **8 Claims**

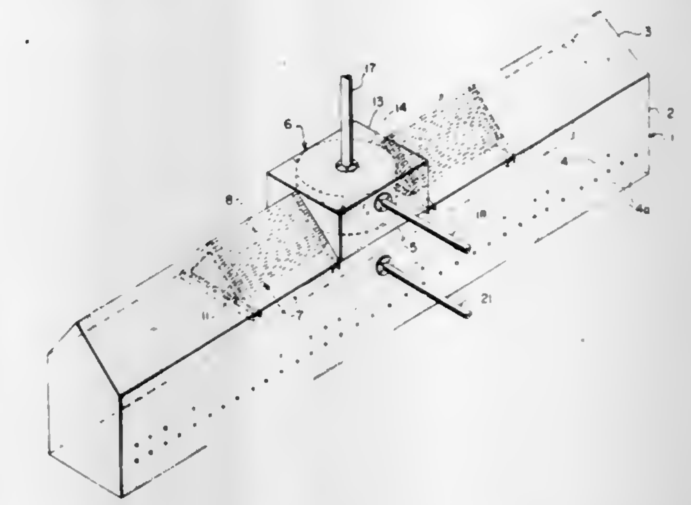

1. A combined distributor-degasser for a dehydrating and degassing apparatus, said distributor-degasser comprising:
(a) a horizontally elongated inverted trough including a lower portion having orifices along its sides and an upper peaked portion having a central upwardly directed opening;
(b) demister means mounted in said central opening and communicating with said trough;
(c) defoamer means in the peaked portion of said inverted trough on each side of said demister means, said defoamer means communicating with said demister means;
(d) means associated with said trough for communicating with liquid-gas interface level control means; and
(e) gas outlet means in said demister means.

2. An apparatus for dehydrating and degassing oil-continuous emulsions containing gases and a dispersed aqueous phase, said apparatus comprising a treating vessel provided with emulsion inlet means and water, gas and treated oil outlet means, and being further provided in its lower portion with the distributor-degasser of claim 1, said vessel emulsion inlet means communicating with the lower portion of said inverted trough, above said orifices, of said distributor-degasser and said vessel gas outlet means communicating with said demister means.

3. The apparatus of claim 2 wherein said treating vessel is provided also with an electrode system adapted to produce an electric treating field, and conductive means associated therewith.

4,371,435
PLACER MINING SLUICE
Colin Eckersley, 2185 Qualicum Dr., Vancouver, B.C., Canada (V5P 2M3)
Filed Oct. 22, 1981, Ser. No. 313,804
Int. Cl.³ B03B *5/26, 7/00*
U.S. Cl. 209—44 **11 Claims**

1. A mining sluice, comprising:
(a) an inverted generally V-shaped screen having first and second sides which slope downwardly and outwardly from a longitudinal axis of said screen;
(b) first and second panels for positioning at opposed ends of said screen axis to close said screen ends;
(c) a deflector pan having opposed first and second ends, said pan for positioning beneath said screen to extend between said first and second screen sides and between said first and second screen ends with said first end of said pan in contact with said first panel; and
(d) a first tray for positioning beneath said deflector pan and

screen at an angle relative to the horizontal and with the uppermost end of said first tray beneath said second end of

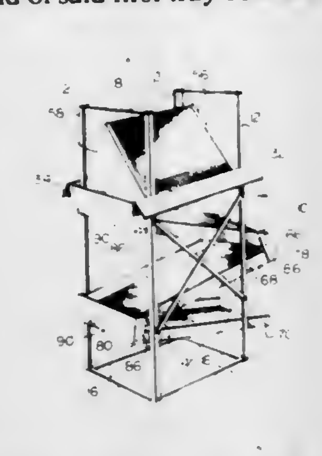

said pan whereby material passing through said screen may pass over said deflector second pan end onto said uppermost tray end.

4,371,436

PRECIOUS METAL RECOVERY APPARATUS

Mark I. Farber, Orange, Conn., assignor to Jeneric Industries, Inc., Wallingford, Conn.

Filed Jul. 6, 1981, Ser. No. 281,000

Int. Cl.³ B07B *1/04*

U.S. Cl. 209—268 **9 Claims**

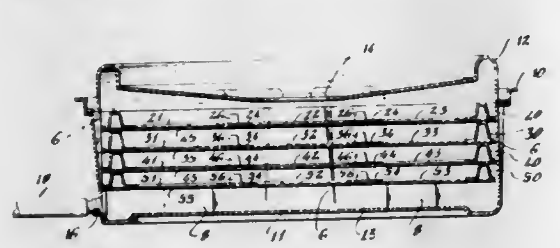

1. A portable, countertop apparatus for recovering particles of a precious metal suspended in a liquid comprising:

a tray including a bottom surface, a pair of end walls and a pair of side walls;

a plurality of filters of successively smaller porosity through which a particle-containing liquid can be passed, each successive filter preventing precious metal particles of progressively smaller sizes suspended in said liquid from passing therethrough;

a frame assembly comprising a separate frame for each of said filters, each frame having a border to which corresponding filter material can be affixed, the perimeter of each frame being adapted to fit snugly within said tray for supporting said filters in horizontally stacked relation within said tray;

a plurality of ribs situated on each of said frames inwardly of the perimeter edges of the frame;

a tray cover situated on top of said tray, said cover having an opening therein into which liquid can be manually poured; and

a drainage port in communication with the interior of said tray to allow liquid poured into the tray and passing through the filters to drain out of the tray.

4,371,437

FUEL SEDIMENTATION DEVICE

Hiroyuki Iwasaki, Urawa, and Kiyoshi Kasahara, Asaka, both of Japan, assignors to Honda Giken Kogyo Kabushiki Kaisha, Tokyo, Japan

Filed Mar. 13, 1981, Ser. No. 243,435

Claims priority, application Japan, Mar. 15, 1980, 55-33850[U]

Int. Cl.³ B01D *21/00*

U.S. Cl. 210—94 **5 Claims**

1. A sedimentation device for purifying liquid comprising a sedimentation cup having an inlet and an outlet formed at its top, and a partition means for vertically dividing the interior of said cup into at least two, upper and lower chambers, said partition means comprising a partition plate in the form of a funnel having a passage bore formed centrally therethrough and a sediment-guiding surface descending toward said passage bore, and a base plate in the form of a funnel symmetrical

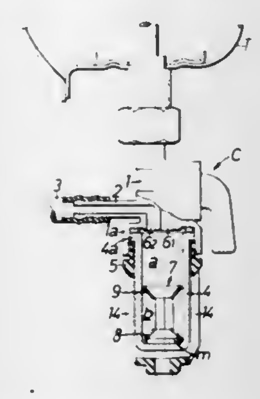

with said partition plate, disposed on the bottom of said sedimentation cup and connected with said partition plate through a plurality of supporting columns and in said base plate having a magnet attached to the lower side thereof.

3. A sedimentation device according to claim 1, wherein said sedimentation cup is formed of transparent glass.

4,371,438

FLUID TREATMENT APPARATUS, A CASING FOR ENCLOSING AND COMPRESSING A STACK OF FLAT ELEMENTS THEREIN, AND A PROCESS FOR MAKING SUCH AN APPARATUS

Robert Benattar, Lyons, and Michel Cronenberger, Givors, both of France, assignors to SODIP, Meyzieu, France

Filed Jun. 27, 1980, Ser. No. 163,820

Claims priority, application France, Jul. 17, 1979, 79 18981

Int. Cl.³ B01D *31/00*

U.S. Cl. 210—232 **26 Claims**

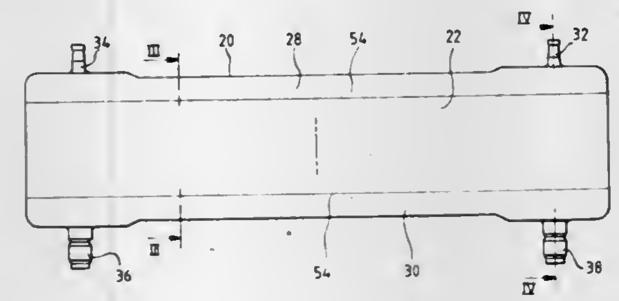

18. Fluid treatment apparatus comprising a casing, a stack of flat elements positioned in said casing, said casing comprising two endplates between which the stack is arranged, internal faces of the said endplates being in contact with the faces of the stack which are substantially parallel to the plane of the elements, at least two lateral plates, internal surfaces of said lateral plates located in front of the two lateral faces of the stack, a plurality of studs and recesses on adjacent surfaces of the lateral plates and the endplates, and cooperatingly engaged surfaces on said studs and said recesses, effective to connect said lateral plates and endplates together and to hold said endplates so that said stack is compressed, the cooperating engagement surfaces of the said studs and recesses having no locking means and being at right angles to the plane of the lateral face of the stack in front of which is located the lateral plate carrying the studs or recesses, the edges of the lateral plates corresponding to the lateral edges of the endplates having rims which cover the marginal zones of the lateral edges of said endplates and are to be attached with them.

4,371,439

CAM ACTUATED FILTER ASSEMBLY

Donald I. Thornton, Warwick, R.I., assignor to Fram Corporation, East Providence, R.I.

Continuation of Ser. No. 147,979, May 8, 1980, abandoned. This application Jun. 12, 1981, Ser. No. 273,163

Int. Cl.³ B01D *27/08*

U.S. Cl. 210—232 **4 Claims**

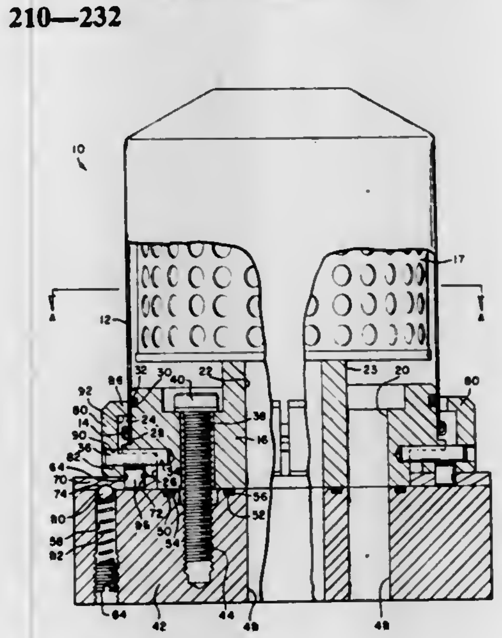

1. A filter assembly comprising:

a housing within which a filter element is disposed;

a support for sealingly receiving the housing to enclose said filter element therebetween, said support carrying a plurality of radially outwardly projecting members;

a plurality of circumferentially extending jaws carried by said support and circumscribing said support and said housing for clamping the housing against the support, each of said jaws having radially extending bores slidably receiving a corresponding one of the radially projecting members to thereby mount the jaws for radial movement toward and away from clamping engagement with said housing;

a cam member mounted for rotation relative to the support and having a slot for each of said jaws, each of said jaws further including an axially extending projection engaging a corresponding slot in said cam member, the slots in said cam member being oriented to move the axially extending projections and therefore said jaws radially along said radially projecting members upon rotation of said camming member.

4,371,440

METHOD OF TREATING A WASTE WATER RICH IN PROTEIN

Kiyoshi Yoshizawa, Tokyo; Kenichi Otsuka, Higashiooizumi; Kikuo Nojiro, Machida; Takeo Koizumi, Yokohama; Katsuyoshi Mitsutomi, Ushiku, and Seiji Nakamura, Kashiwa, all of Japan, assignors to National Tax Administration Agency and Toh Zinc Company Limited, both of Tokyo, Japan

Filed Sep. 23, 1981, Ser. No. 304,965

Int. Cl.³ C02F *3/34*

U.S. Cl. 210—601 **1 Claim**

1. A method of treating a waste water rich in protein, comprising:

adding to a waste water rich in protein at least one yeast capable of assimilating a high amount of protein, said at least one yeast being selected from the group consisting of

Saccharomyces sp. KB 14-1, FERM-P No. 4886,

Candida sp. KB 8, FERM-P No. 4885,

Candida sp. 3B, FERM-P No. 4884, and

Trichosporon sp. 1B, FERM-P No. 4887,

thereby causing said yeast to assimilate protein; and

flowing the obtained waste water into an activated sludge tank in which the obtained waste water is treated with an activated sludge.

4,371,441

PROCESS AND APPARATUS FOR THE SEPARATION OF IMMISCIBLE LIQUID MIXTURES

Nikolaus Mathes, Breuberg; Hans J. Pitowski, Miltenberg, both of Fed. Rep. of Germany, and Gunther Vitzthum, Enka, N.C., assignors to Akzona Incorporated, Asheville, N.C.

Continuation of Ser. No. 107,956, Dec. 28, 1979, abandoned, which is a continuation of Ser. No. 870,257, Jan. 17, 1978, abandoned. This application Feb. 3, 1981, Ser. No. 231,090

Claims priority, application Fed. Rep. of Germany, Jan. 18, 1977, 2701759

Int. Cl.³ B01D *17/02*

U.S. Cl. 210—649 **2 Claims**

2. A process for the separation of mixtures of liquids insoluble in each other by means of nonwoven fibrous sheet structures, comprising bringing the mixtures of liquids into contact, under static liquid pressure, without additional pressure, with one side of a sheet structure comprising fibers or filaments permeable to only one of the liquids and nonpermeable to said other liquid, wherein the nonwoven sheet structure is produced on a paper machine, and said nonwoven is composed of a blend of 15 wt. % viscose fiber, 20 wt. % nylon 6 fiber, 50 wt. % of a fiber of copolyamide of 20% nylon salt and 80% caprolactam having a shrinkage capacity of at least 25%, and 15 wt. % bonding fiber and consolidated by thermal treatment of the wet nonwoven, whereby said permeable liquid is prevented from passing through said sheet structure and collecting the liquids separately.

4,371,442

METHOD FOR OBTAINING DISSOLVED SUSPENDED OR CHEMICALLY BOUND SUBSTANCES FROM A LIQUID

Hans G. Bals, Glenhausen-Hailer, Fed. Rep. of Germany, assignor to Uranerzbergbau GmbH & Co. KG, Bonn, Fed. Rep. of Germany

Division of Ser. No. 882,447, Mar. 1, 1978, abandoned, which is a continuation of Ser. No. 741,130, Nov. 11, 1976, abandoned. This application Apr. 16, 1981, Ser. No. 254,736

Claims priority, application Fed. Rep. of Germany, Nov. 12, 1975, 2550751

Int. Cl.³ B01D *15/02*

U.S. Cl. 210—661 **2 Claims**

1. The method of obtaining chemical substances from a liquid by a bed of adsorbent particles, comprising the steps of:

establishing a bed of adsorbent particles of a specific gravity greater than that of the liquid within a container channel, flowing the liquid at a continuous steady flow rate in a path passing upwardly through the bed at a velocity chosen to suspend the particles in a quasi-stationary position within the liquid separated from each other so that the particles are wetted on their entire surfaces and do not tend to collide with each other to erode accumulated chemicals from the water,

stabilizing the liquid flow to reduce turbulence in the bed and to distribute the particles substantially uniformly across the bed by providing in the liquid path before it reaches the bed a resistance to liquid flow which is at least one third of the resistance to flow established by said bed, permitting the particles in the bed to acquire chemical substances from the liquid which increase their specific gravity thereby to migrate in the liquid flow path by the action

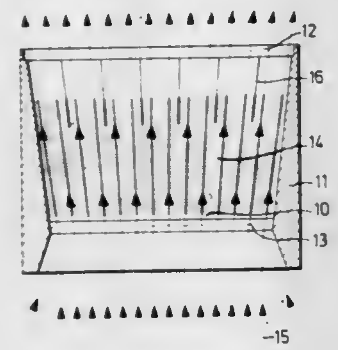

of gravity substantially due only to the accumulated chemicals as a bed without significant movement of the particles relative to each other within the liquid, thereby to reduce contact between the particles and with the container channel, and

withdrawing from the bed those particles having greater specific gravity from accumulated chemicals deposited thereon from the liquid.

4,371,443
METHOD OF AND COMPOSITION FOR ACIDIZING SUBTERRANEAN FORMATIONS
Bill R. Keeney, Duncan, Okla., assignor to Halliburton Company, Duncan, Okla.
Filed Feb. 9, 1981, Ser. No. 232,785
Int. Cl.³ E21B *43/27*
U.S. Cl. 252—8.55 C **14 Claims**

1. An acidic composition comprising:
(a) an aldehyde selected from the group consisting of formaldehyde, acetaldehyde, propionaldehyde, glyoxal, butoxyaldehyde, trioxine, and paraformaldehyde;
(b) an ammonium salt selected from the group consisting of ammonium fluoride, ammonium bifluoride, ammonium chloride, ammonium sulfate and ammonium nitrate present in an amount sufficient to react with said aldehyde to form an acid; and
(c) a chemical additive selected from the group consisting of acetic acid, an alkali metal salt of said acetic acid, an ammonium salt of said acetic acid, formic acid, an alkali metal salt of formic acid, an ammonium salt of said formic acid, mixtures thereof and mixtures with hexamethylenetetramine, said additive being and present in an amount sufficient to retard said reaction of said aldehyde to form said acid.

4,371,444
PROCESS FOR SECONDARY RECOVERY
David R. McCoy, and Carter G. Naylor, both of Austin, Tex., assignors to Texaco Inc., White Plains, N.Y.
Continuation-in-part of Ser. No. 112,582, Jan. 16, 1980, abandoned. This application May 8, 1981, Ser. No. 261,853
The portion of the term of this patent subsequent to Sep. 8, 1998, has been disclaimed.
Int. Cl.³ E21B *43/22*
U.S. Cl. 252—8.55 D **21 Claims**

1. A process for recovering hydrocarbons from a subterranean hydrocarbon-bearing formation penetrated by an injection well and a production well which comprises:
(A) injecting into the formation via an injection well a drive fluid comprising water having dissolved therein:
(a) from 0.05 to about 6.0 weight percent of a nonionic surfactant of the formula:

$$RO(CH_2CH_2O)_m(CH_2CH(OH)CH_2O)_nH,$$

wherein R is selected from the group consisting of alkyl of from 8 to about 20 carbon atoms and

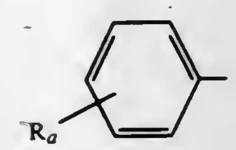

wherein R_a is branched or linear alkyl of from 6 to about 18 carbon atoms, wherein m is an integer of from 1 to about 20 and n is an integer of from 1 to about 8, and
(b) about 0.03 to about 5.0 weight percent of a surfactant selected from the group consisting of an anionic sulfonate and an anionic sulfate surfactant,
(B) forcing the said fluid through the formation, and
(C) recovering hydrocarbons through the production well.

4,371,445
ARRANGEMENT IN PAIRS OF PLASTIC SLIDING ON PLASTIC IN TRIBOLOGIC SYSTEMS
Heinz Faigle, Hard, Austria, assignor to Heinz Faigle KG, Hard, Austria
Filed Jun. 18, 1979, Ser. No. 49,163
Claims priority, application Austria, Mar. 14, 1979, 1930/79
Int. Cl.³ C10M *5/10, 5/00*
U.S. Cl. 252—12 **21 Claims**

1. In a tribological system with plastic/plastic pairings, in which plastics carry out motions in sliding friction relative to one another and in which at least one of the main sliding partners or auxiliary partners is a plastic, containing polar, cyclic compounds, in which the cyclic part of the molecule on at least one side is coupled directly to an atom of Group V or of Group VI of the Periodic System of the elements, or in which the rings contain the atoms mentioned, the improvement which comprises said polar plastic materials containing one or more cyclic compounds selected from the group consisting of:
(a) monovalent cyclic chain polymers,
(b) chain polymers in the form of polyheterocycles,
(c) chain polymers in the form of monovalent polyheterocycles,
(d) fully cyclic chain polymers, and
(e) homopolymers, copolymers, polymer mixtures from groups (a) to (d);
and wherein both main sliding partners are polar and contain different cyclic compounds, are different atoms or chemical groups which are coupled to the cyclic part, in which case the auxiliary sliding partner is nonpolar, or both main sliding partners are nonpolar and the auxiliary sliding partner is polar and contains said cyclic compounds.

4,371,446
LUBRICANT
Hirotsugu Kinoshita, Kawasaki; Hiroshi Uemura, Machida, and Makoto Sekiya, Kawasaki, all of Japan
Filed Nov. 7, 1980, Ser. No. 205,375
Claims priority, application Japan, Nov. 15, 1979, 54/147135; Aug. 29, 1980, 55/118336
Int. Cl.³ C10M *1/26, 1/36*
U.S. Cl. 252—51.5 A **19 Claims**

1. Method of lubricating sliding surfaces composed of metal or non-metallic materials in sliding contact with each other which comprises applying to such sliding surfaces an effective lubricating amount of a lubricant comprising as a major component a dioleate compound of the formula

$$(R^3NH_2CH_2CH_2NH_3)^{++}2(OOCR^4)^-$$

in which R^3 is the corresponding hydrocarbon radical of a tallow fatty acid and R^4 is an oleyl radical and about 5 to 30% by weight of a diamide compound of the formula $R^2CO—NHR^1HN—CO—R^2$ in which R^1 is an alkylene radical having 2 to 4 carbon atoms, and R^2 is selected from the group consisting of an alkyl radical and an alkenyl radical, each correspondingly having 14 to 18 carbon atoms.

4,371,447
LOW VISCOSITY WATER-IN-OIL MICROEMULSIONS
Thomas H. Webb, Solon; Hugh F. Vest, Parma, and Keng S. Chan, South Euclid, all of Ohio, assignors to Standard Oil Company, Cleveland, Ohio
Filed Jul. 6, 1981, Ser. No. 280,413
Int. Cl.³ C09K *5/00*
U.S. Cl. 252—73 **8 Claims**

1. A water-in-oil microemulsion comprising:
(a) an oil phase
(b) an aqueous phase
(c) at least one emulsifier, and
(d) at least one aliphatic diol of the formula

$$R-\underset{OH}{\underset{|}{CH}}-(CHR')_n-\underset{OH}{\underset{|}{CH}}-R'' \qquad (I)$$

where
R and R″ are independently hydrogen or C_1–C_{18} aliphatic groups,
each R′ is independently hydrogen or a C_1–C_{20} aliphatic group,
n is an integer of 1–4, with the provisoes that
the number of carbon atoms in R is different than the number of carbon atoms in R″, and
the total number of carbon atoms in I is from 5 to about 25.

4,371,448
HYDRAULIC FLUID COMPOSITION WITH IMPROVED PROPERTIES BASED ON BORIC ACID ESTERS, GLYCOL MONO-ETHERS AND BIS-(GLYCOLETHER) FORMALS
Wolfgang Knoblauch, Burghausen, and Konrad von Werner, Burgkirchen, both of Fed. Rep. of Germany, assignors to Hoechst Aktiengesellschaft, Fed. Rep. of Germany
Filed Nov. 5, 1980, Ser. No. 204,326
Claims priority, application Fed. Rep. of Germany, Nov. 8, 1979, 2945094
Int. Cl.³ C10M *3/48*
U.S. Cl. 252—78.1 **8 Claims**

1. Hydraulic fluid essentially consisting of
(A) 20 to 40% by weight, relative to the weight of the total fluid, of a boric acid ester which is obtained when orthoboric acid, diethylene glycol and an ethylene glycol monoalkyl ether of the formula I

$$R(OCH_2CH_2)_xOH \qquad (I)$$

in which R is an alkyl group with 1 to 4 C atoms and x is an integer from 2 to 4, are reacted in a molar ratio of 1:1:1 at a temperature of 50° to 150° C., the water of reaction formed being removed continuously;
(B) 30 to 60% by weight, relative to the weight of the total fluid, of at least one ethylene glycol monoalkyl ether of the formula I in which R and x have the meaning given;
(C) 10 to 40% by weight, relative to the weight of the total fluid, of at least one bis-(ethylene glycol monoalkyl ether)-formal of the formula II

$$R^1(OCH_2CH_2)_{n1}O—CH_2—O(CH_2CH_2O)_{n2}R^2 \qquad (II)$$

wherein R^1 and R^2 denote an alkyl group with 1 to 4 C atoms and n_1 and n_2 denote an integer from 1 to 4;
(D) 0.1 to 5% by weight, relative to the weight of the total fluid, of at least one alkylamine of the formula III

$$R^3-N\begin{matrix} R^4 \\ R^5 \end{matrix} \qquad (III)$$

in which R^3 denotes an alkyl or monounsaturated alkenyl group with 1 to 18 C atoms, R^4 denotes hydrogen, $—(CH_2CH_2O)_yH$ or

$$-(CH_2\underset{CH_3}{\underset{|}{C}H}O)_yH,$$

in which y is an integer from 1 to 5, and R^5 denotes hydrogen, $—(CH_2CH_2O)_yH$ or

$$-(CH_2\underset{CH_3}{\underset{|}{C}H}O)_yH,$$

in which y is an integer from 1 to 5, or an alkyl or monounsaturated alkenyl group with 1 to 18 C atoms, with the proviso that the sum of the C atoms in R^3 and R^5 in formula III is not greater than 18; and
(E) 0.05 to 5% by weight, relative to the weight of the total fluid, of at least one ingredient selected from the group consisting of a pH stabilizer, a corrosion inhibitor, and an antioxidant.

4,371,449
PRODUCT FOR DELINTING COTTONSEED
Richard L. Smith, Jr., East Point, Ga., assignor to SSC Industries, Inc., East Point, Ga.
Division of Ser. No. 4,408, Jan. 18, 1979, Pat. No. 4,216,616. This application Dec. 3, 1979, Ser. No. 99,548
Int. Cl.³ C11D *7/08, 1/825*
U.S. Cl. 252—142 **13 Claims**

1. A product for use in the process of delinting of cottonseed consisting essentially of a mixture of sulfuric acid having a concentration of 40% or more H_2SO_4 and a foaming agent stable to sulfuric acid in sufficient quantity to produce a stable foam, said foaming agent being a fatty amide which is a reaction product of an amine and a coconut product selected from the group consisting of coconut fatty acid and coconut oil.

4,371,450
VANADIUM-COBALT CORROSION INHIBITOR SYSTEM FOR SOUR GAS CONDITIONING SOLUTIONS
Edward C. Y. Nieh, Austin, Tex., assignor to Texaco Inc., White Plains, N.Y.
Filed Mar. 12, 1981, Ser. No. 243,217
Int. Cl.³ B01D *47/02, 53/34;* **C23F** *11/14, 11/18*
U.S. Cl. 252—189 **14 Claims**

1. A corrosion inhibited composition consisting essentially of an aqueous alkanolamine solution employed in acid gas removal service and an inhibiting amount of a combination of
an anion containing vanadium in the plus 4 or plus 5 valence state and
an anion containing cobalt in the plus 2 valence state.

4,371,451
LECITHIN CONTAINING SURFACE RELEASE COMPOSITIONS

Frank Scotti, 450 Indian Rd., Wayne, N.J. 07470, and Edward H. Page, 1021 Hillcrest Rd., Ridgewood, N.J. 07450

Filed Feb. 10, 1982, Ser. No. 347,568
Int. Cl.³ C08L *91/00*

U.S. Cl. 252—305 21 Claims

1. A cookware surface release composition comprising water, lecithin, and dimethylether adapted to be dispensed under dimethylether propellant pressure from an aerosol container, wherein the lecithin is dispersed in a solution of the dimethylether and water, and the dimethylether is present in an amount sufficient to propel the lecithin dispersion from an aerosol container and onto a cookware surface without foaming.

4,371,452
PROCESS FOR HYDROCARBON REFORMING AND APPARATUS THEREFOR

Kozo Ohsaki, Funabashi; Kazuo Hirokawa; Goro Fukuda, both of Chiba; Kozi Otsuka, Mobara, and Tadayoshi Tomita, Yokohama, all of Japan, assignors to Toyo Engineering Corporation, Japan

Continuation of Ser. No. 149,638, May 14, 1980, abandoned. This application Dec. 9, 1981, Ser. No. 328,822
Claims priority, application Japan, May 18, 1979, 54/60271
Int. Cl.³ C01B *3/38*

U.S. Cl. 252—373 2 Claims

1. In a process for reforming hydrocarbons in which a gaseous mixture of a sulfur-containing liquid hydrocarbon selected from the group consisting of kerosene, gas oil and vacuum distillation gas oil, and an oxidizing agent for reforming is brought into contact with a catalyst to convert the mixture into a mixed gas containing hydrogen and carbon monoxide, the improvement comprising:

(a) evaporating by heating said liquid hydrocarbon in the mixture of said oxidizing agent to form said gaseous mixture at a temperature of from 350° C. to 600° C.;

(b) further heating said gaseous mixture from step (a) to a temperature above 800° C. while passing said gaseous mixture through a bed of aluminum oxide and an alkali metal oxide and/or alkaline earth metal oxide;

(c) passing said gaseous mixture from step (b) through a nickel-containing catalyst bed at a temperature above 800° C. to convert said gaseous mixture into said mixed gas, said nickel-containing catalyst being composed of at least one metal oxide selected from oxides or beryllium, magnesium, calcium, strontium, barium and aluminum with nickel incorporating therein, whereby the sulfur compound contained in said liquid hydrocarbon is converted into readily desulfurizable H_2S and/or COS; and

(d) passing said mixed gas discharged from step (c) countercurrently to the flow of said gaseous mixture of sulfur-containing liquid hydrocarbon and oxidizing agent in a heat-exchange zone passing through said bed of step (b) and said catalyst bed of step (c), whereby the sensible heat of said discharged mixed gas is utilized in said reforming and for heating up said gaseous mixture.

4,371,453
FLUID CATALYST REGENERATION PROCESS AND APPARATUS

Anthony G. Vickers, Arlington Heights, Ill., assignor to UOP Inc., Des Plaines, Ill.

Filed May 20, 1981, Ser. No. 265,502
Int. Cl.³ B01J *29/38, 21/20;* C10G *11/18*

U.S. Cl. 252—417 3 Claims

1. A process for regenerating a coke-contaminated fluid catalyst, said process including the steps of:

(a) introducing oxygen-containing regeneration gas, coke-contaminated fluid catalyst into a lower locus of a combustion zone maintained at a temperature sufficient for coke-oxidation and therein oxidizing coke to produce hot regenerated catalyst and hot flue gas;

(b) transporting said hot flue gas and a portion of said hot regenerated catalyst into a regenerated catalyst disengaging zone, wherein said hot regenerated catalyst is separated from said flue gas;

(c) passing a portion of hot regenerated catalyst from said disengaging zone to a heat removal zone and therein maintaining said catalyst at dense-phase fluid bed conditions, said combustion and heat removal zones being substantially vertically oriented with respect to each other with said heat removal zone below said combustion zone;

(d) removing heat in said heat removal zone by providing heat removal means at least partially immersed in said dense-phase fluid catalyst bed of said heat removal zone;

(e) passing relatively cool catalyst from said heat removal zone to said combustion zone through a substantially vertical transfer line having an inlet in a lower locus of said dense-phase fluid bed in said heat removal zone and an outlet in a lower locus of said combustion zone, said passing of relatively cool catalyst effected by passing at least a portion of said regeneration gas into said transfer line at a locus below the level of said dense-phase fluid bed; and

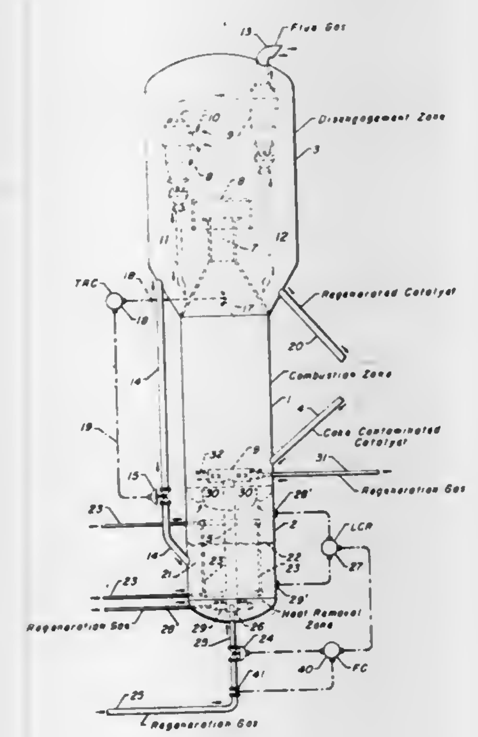

(f) controllably maintaining the extent of immersion of said heat removal means in said dense-phase fluid catalyst bed by maintaining the level of said dense-phase fluid catalyst bed in said heat removal zone by controlling the quantity of said regeneration gas passed into said transfer line in response to said level.

2. Process of claim 1 further characterized in that the temperature at an upper locus of said combustion zone is controllably maintained by controlling the quantity of said hot regenerated catalyst passed from said disengaging zone to said heat removal zone in response to said temperature at said upper locus.

3. Process of claim 1 further characterized in that fluidization of said dense-phase fluid catalyst bed in said heat removal zone is effected by introducing at least a portion of said regeneration gas into a lower locus of said bed and venting said portion from said removal zone to a lower locus of said combustion zone.

4,371,454
PROCESS FOR PREPARING SPHERICAL CARBON MATERIAL AND SPHERICAL ACTIVATED CARBON

Kaji Hisatsugu, and Kazuhiro Watanabe, both of Iwaki, Japan, assignors to Kureha Kagaku Kogyo Kabushiki Kaisha, Tokyo, Japan

Filed Oct. 29, 1980, Ser. No. 201,927
Claims priority, application Japan, Nov. 2, 1979, 54-142154; Nov. 2, 1979, 54-142155; Apr. 15, 1980, 55-49925
Int. Cl.³ C01B *31/02*

U.S. Cl. 252—422 3 Claims

3. A process for preparing spherical activated carbon, comprising the steps of:

heating while continuously stirring an admixture of (a) 100 parts by weight of a mixture of 30 to 95 weight percent of a pitch and 5 to 70 weight percent of amorphous carbon particles having a diameter smaller than 200 microns and (b) 5 to 50 parts by weight of a viscosity-controlling agent, thereby fluidifying uniformly said admixture;

extruding the fluidified admixture from an extrusion die, thereby forming the fluidified admixture into a string-like shape;

cooling the formed admixture having a string-like shape;

cutting the cooled admixture having a string-like shape into fragments having a stick-like shape;

putting the fragments into hot water kept at a temperature higher than the softening point of said admixture, thereby obtaining spherical particles of said admixture;

removing said viscosity-controlling agent from the obtained sphere;

infusibilizing the resultant spherical particles with an aqueous solution of an oxidant selected from the group consisting of nitric acid, sulfuric acid, persulfuric acid, peracetic acid, permanganate, dichromate, a salt of halogen oxyacid and a mixture thereof;

carbonizing the infusibilized spherical particles; and

activating the carbonized spherical particles.

4,371,455
SUPPORTED CATALYST FOR OLEFIN POLYMERIZATION

Mark P. Mack, and Charles T. Berge, both of Ponca City, Okla., assignors to Conoco, Inc., Ponca City, Okla.

Filed Dec. 21, 1981, Ser. No. 332,417
Int. Cl.³ C08F *4/02, 4/64*

U.S. Cl. 252—429 C 11 Claims

1. A method for forming a supported activated catalyst for olefin polymerization comprising

(a) reacting magnesium metal with an organic halide or halides to yield a dialkyl magnesium composition, magnesium dihalide and unreacted magnesium metal;

(b) separating the magnesium dihalide and magnesium metal from the dialkyl magnesium composition in the substantial absence of oxygen and moisture, then treating the magnesium dichloride and magnesium metal with alkyl halides or aryl halides or mixtures of these to form an organometallic substance in situ;

(c) adding transition metal halides to the mixture of (b) or adding (b) to transition metal halides, allowing reaction to occur and removing unreacted alkyl and aryl halides as well as unreacted transition metal halides before

(d) adding alkylating agents to form a polymerization catalyst.

4,371,456
CATALYST FOR DIRECT HYDRATION OF ETHYLENE TO ETHYL ALCOHOL AND PROCESS FOR PREPARATION THEREOF

Vlastimil Kadlec, Litvinov; Vojtech Grosser, Rudolice, and Jakub Rosenthal, Mezibori u Litvinova, all of Czechoslovakia, assignors to Chemopetrol, koncernovy podnik, Chemicke zavody ceskoslovenskosovetskeho pratelstvi, Litvinov, Czechoslovakia

Filed Apr. 17, 1981, Ser. No. 255,221
Claims priority, application Czechoslovakia, Apr. 18, 1980, 2734-80
Int. Cl.³ B01J *21/08, 27/16*

U.S. Cl. 252—435 6 Claims

1. Catalyst for direct hydration of ethylene to ethyl alcohol consisting of phosphoric acid on a silicon dioxide base characterized in that said catalyst consists of active synthetic silicon dioxide and natural kieselguhr in a weight ratio ranging from 1:0.2 to 1:4, and phosphoric acid in an amount ranging from 20–50 weight percent based on the weight of the catalyst.

4,371,457
ZEOLITES MODIFIED WITH GROUP VA METALS

Chin-Chiun Chu, North Brunswick, N.J., assignor to Mobil Oil Corporation, New York, N.Y.

Continuation-in-part of Ser. No. 201,899, Oct. 29, 1980, Pat. No. 4,302,621. This application Dec. 19, 1980, Ser. No. 218,312
Int. Cl.³ B01J *27/18, 29/06*

U.S. Cl. 252—437 10 Claims

1. A catalyst composition comprising:

a crystalline zeolite material characterized by a constraint index of within the approximate range of 1 to 12 and a silica to alumina mole ratio of at least 12, said zeolite being selected from ZSM-5, ZSM-11, ZSM-12, ZSM-23, ZSM-35, ZSM-38 and ZSM-48;

said zeolite further comprising at least 0.25 weight percent of one or more Group VA metals incorporated into said zeolite in the form of a Group VA metal oxide and at least 0.25 weight percent of phosphorus incorporated into said zeolite in the form of an oxide of phosphorus.

4,371,458
CATALYTIC COMPOUNDS EMPLOYING ALUMINA PROMOTED WITH ZINC, TITANIUM, COBALT AND MOLYBDENUM AS THE CATALYTIC AGENT

Alan D. Eastman, and Lloyd E. Gardner, both of Bartlesville, Okla., assignors to Phillips Petroleum Company, Bartlesville, Okla.

Division of Ser. No. 125,437, Feb. 28, 1980, Pat. No. 4,287,050. This application Apr. 28, 1981, Ser. No. 258,250
Int. Cl.³ B01J *27/02, 23/16*

U.S. Cl. 252—439 7 Claims

1. A catalyst composition comprising catalytic grade alumina, zinc titanate, cobalt, and molybdenum.

4,371,459
FLEXIBLE SCREEN-PRINTABLE CONDUCTOR COMPOSITION

Nicholas Nazarenko, West Chester, Pa., assignor to E. I. Du Pont de Nemours and Company, Wilmington, Del.

Filed Dec. 17, 1981, Ser. No. 331,893
Int. Cl.³ H01B *1/02*

U.S. Cl. 252—514 16 Claims

1. A screen printable conductor composition comprising

a. 70–90% weight, basis total solids, of a conductive phase consisting essentially of finely divided particles of (1) 50–95% weight silver, and (2) 50–5% weight of a base metal selected from the group consisting of aluminum, tin and nickel and mixtures thereof dispersed in a solution of

b. 30–10% weight, basis total solids, of polymers consisting essentially of (1) 10–65% weight of a multipolymer prepared by copolymerization of vinyl acetate, vinyl chloride

and 0.3-10% weight ethylenically unsaturated dicarboxylic acid in which the weight ratio of vinyl chloride to vinyl acetate is from 3 to 8 and (2) 90-35% by weight of a linear aromatic polyester resin having an intrinsic viscosity of 0.5-1 dissolved in

c. volatile nonhydrocarbon polar solvent in which the solvent has a boiling range of 150°-220° C.

4,371,460
BICYCLIC COMPOUNDS AND UTILIZATION THEREOF AS PERFUMING AGENTS
Ferdinand Näf, Carouge; Rene Decorzant, and Karl H. Schulte-Elte, both of Onex, all of Switzerland, assignors to Firmenich SA, Geneva, Switzerland
Filed Dec. 22, 1981, Ser. No. 335,196
Claims priority, application Switzerland, May 22, 1980, 4008/80
Int. Cl.³ C07C *49/557;* **A61K** *7/46*
U.S. Cl. 252—522 R **4 Claims**

1. A compound of formula (I)

(I)

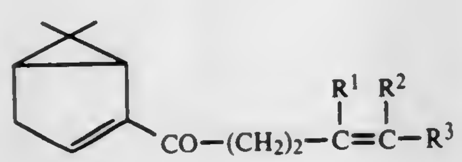

wherein each of symbols R^1, R^2 and R^3, identical or different, represents a hydrogen atom or a lower alkyl radical having 1 to 3 carbon atoms, preferably a methyl group.

2. Utilization of at least one of the compounds of formula (I) according to claim 1 as perfuming agent for the preparation of perfumes and perfumed products.

4,371,461
LIQUID DETERGENT COMPOSITIONS WITH TERTIARY ALCOHOL SKIN FEEL ADDITIVES
Keith A. Jones, Fairfield, Ohio, and Harry S. Walker, Jr., Bryn Mawr, Pa., assignors to The Procter & Gamble Company, Cincinnati, Ohio
Continuation-in-part of Ser. No. 193,050, Oct. 2, 1980, abandoned. This application Sep. 8, 1981, Ser. No. 299,692
Int. Cl.³ C11D *3/20, 3/46, 3/48, 17/08*
U.S. Cl. 252—547 **8 Claims**

1. A liquid detergent composition containing by weight:
(a) from about 10% to about 50% of a detergent surfactant;
(b) from 0% to about 15% of a suds stabilizing nonionic surfactant selected from the group consisting of amine oxides, fatty acid amides, and the ethylene oxide condensates of alcohols and alkyl phenols;
(c) from about 0.01% to about 0.6% of linalool; and
(d) balance water and alcohol

said composition being essentially free of aldehydes and primary alcohols with structures like linalool and having a pH in use of less than about 8.5.

4,371,462
METHOD FOR PURIFICATION OF ANTERIOR PITUITARY HORMONES
Randy I. Hecht, Rockville, Md., assignor to Genex Corporation, Rockville, Md.
Filed Jan. 21, 1982, Ser. No. 341,216
Int. Cl.³ A61K *35/55;* **C07G** *7/00*
U.S. Cl. 260—112 R **23 Claims**

1. A process of purifying anterior pituitary hormone which comprises eluting an anterior pituitary hormone-containing mixture on an anion-exchange column with a buffer solution, separating the eluate on an isoelectric focusing column, and retaining the fractions collected at or near the isoelectric point of the anterior pituitary hormone.

4,371,463
ENZYME-RESISTANT OPIATE PENTAPEPTIDES
Candace B. Pert, Bethesda, Md., and Jaw-Kang Chang, Pulerton, Calif., assignors to The United States of America as represented by the Department of Health and Human Services, Washington, D.C.
Filed Feb. 17, 1977, Ser. No. 769,686
Int. Cl.³ C07C *103/52;* **A61K** *37/00*
U.S. Cl. 260—112.5 E **3 Claims**

1. A compound of the formula

H-Tyr-Sar-Gly-Phe-Y-R

wherein Y is Leu or Met; R is OH or NH_2; and the stereochemical configuration of each of the optically active amino acid residues is L.

4,371,464
DIPEPTIDE SWEETENER
Wilhelmus H. J. Boesten, Sittard, and Lambertus A. C. Schiepers, Maastricht, both of Netherlands, assignors to Stamicarbon, B.V., Geleen, Netherlands
Filed Sep. 1, 1981, Ser. No. 298,521
Claims priority, application Netherlands, Sep. 4, 1980, 8005006
Int. Cl.³ C07C *103/52;* **A61K** *37/00*
U.S. Cl. 260—112.5 R **3 Claims**

1. Compounds having the general formula

Formula I

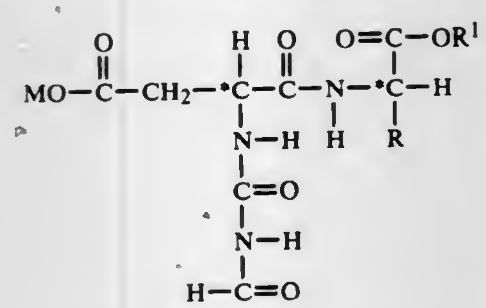

wherein

M represents hydrogen, ammonium, alkali or alkaline earth,
R respesents

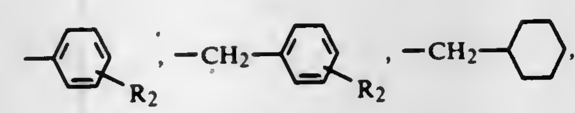

R_1 represents methyl, ethyl, or propyl,
R_2 represents —OH, or —OCH_3,
* signifies an L-optical configuration for this atom.

4,371,465
MAMMALIAN COLLAGENASE INHIBITORS
William H. McGregor, Malvern, Pa., assignor to American Home Products Corporation, New York, N.Y.
Filed Oct. 7, 1981, Ser. No. 309,367
Int. Cl.³ C07C *103/52;* **A61K** *37/00*
U.S. Cl. 260—112.5 R **2 Claims**

1. A compound of the formula:

$$\text{R—Gly—L-Pro—L-Glu—D,L-}\overset{\overset{\text{SH}}{|}}{\text{Val}}\text{—NH}_2$$

in which

R is hydrogen, alkanoyl of 2 to 6 carbon atoms, cycloalkylcarbonyl of 6 to 8 carbon atoms or alkoxycarbonyl of 2 to 6 carbon atoms;

or a pharmaceutically acceptable salt thereof.

4,371,466
MAMMALIAN COLLAGENASE INHIBITORS
William H. McGregor, Malvern, Pa., assignor to American Home Products Corporation, New York, N.Y.
Filed Oct. 7, 1981, Ser. No. 309,369
Int. Cl.³ C07C *103/52;* **A61K** *37/00*
U.S. Cl. 260—112.5 R **4 Claims**

1. A compound of the formula:

$$X—R_1—R_2—[R_3]_n—NH_2$$

in which

X is hydrogen, alkanoyl of 2 to 6 carbon atoms, cycloalkylcarbonyl of 6 to 8 carbon atoms or alkoxycarbonyl of 2 to 6 carbon atoms;
R_1 is Cys-, 3-mercapto-Val-, p-Glu-Cys-, p-Glu-3-mercapto-Val- or Pro-Gln-Gly-;
R_2 is Leu-, Ile- or Val-;
R_3 is Ala-, Ala-Gly- or Ala-Gly-Arg-; and
n is 0 or 1;

or a pharmaceutically acceptable salt thereof.

4,371,467
PROCESS FOR PRODUCING ISOINDOLINONE PIGMENTS
Hirohito Ando, and Naoki Furukawa, both of Hazaki, Japan, assignors to Dainippon Ink and Chemicals Inc., Tokyo, Japan
Filed Sep. 29, 1980, Ser. No. 191,504
Claims priority, application Japan, Oct. 3, 1979, 54/126886
Int. Cl.³ C07D *209/50, 401/14, 403/14, 417/14*
U.S. Cl. 260—165 **6 Claims**

1. A process for producing an isoindolinone pigment, which comprises (1) dispersing a salt formed from an isoindolinone compound of the formula

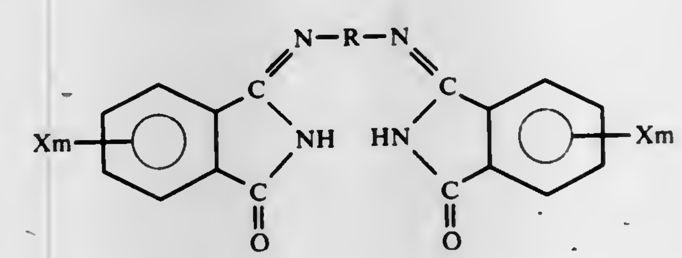

wherein X represents a chlorine or bromine atom, R represents 1,2-, 1,3- or 1,4-phenylene group, 2,2′ or 4,4′-diphenylene group, 4,4′-diphenylenesulfide group, 4,4′-diphenyleneurea group, stilben-4,4′-ylene group, benzoylanilin-4,4′-ylene group, azobenzen-4,4′-ylene group, 4,4′-diphenyleneether group, 4,4′-diphenylenemethane group, 1,4-naphthylene group, pyridin-2,6-ylene group, pyridin-2,5-ylene group, benzothiazole-2,5-ylene group or carbazol-3,6-ylene group, these groups being optionally substituted by a lower alkyl group, a lower alkoxy group or a halogen atom and m is 0 or an integer of 1 to 4, and a base, in water, and then (2) adding thereto an organic solvent not miscible freely with water to hydrolyze the salt.

4,371,468
INTERMEDIATES TO PRODUCE IMIDAZODIAZEPINES
Armin Walser, West Caldwell, and Rodney I. Fryer, North Caldwell, both of N.J., assignors to Hoffmann-La Roche Inc., Nutley, N.J.
Division of Ser. No. 905,820, May 15, 1978, Pat. No. 4,280,957, which is a continuation of Ser. No. 663,660, Mar. 4, 1976, abandoned, which is a continuation-in-part of Ser. No. 602,691, Aug. 7, 1975, abandoned, which is a continuation-in-part of Ser. No. 504,924, Sep. 11, 1974, abandoned. This application Mar. 16, 1981, Ser. No. 244,511
Int. Cl.³ C07D *243/16, 487/04, 401/04, 487/14*
U.S. Cl. 260—239 BD **1 Claim**

1. A compound of the formula

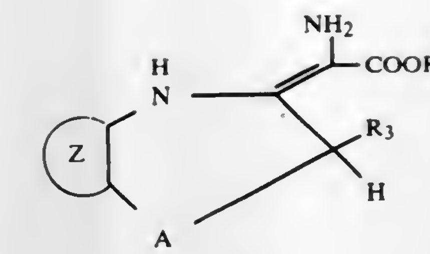

wherein R is lower alkyl; A is

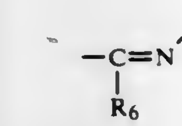

R^3 is selected from the group consisting of hydrogen and lower alkyl; R_6 is selected from the group consisting of phenyl, mono-halo or mono-nitro substituted phenyl, di-halo or halo-nitro substituted phenyl, pyridyl and mono-halo or mono-nitro pyridyl; R_4 is selected from the group consisting of hydrogen, halogen, trifluoromethyl, lower alkyl, nitro, cyano, mono-or di-lower alkyl substituted amino, amino, hydroxy lower alkyl and lower alkanoyl; and

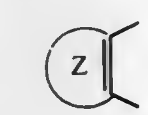

is selected from the group consisting of

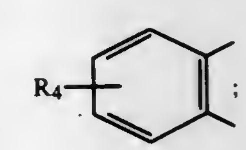

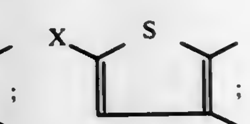

wherein X is chlorine, bromine, iodine or hydrogen

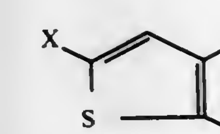

and

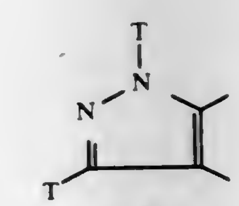

wherein X is chlorine, bromine, iodine or hydrogen

wherein T is hydrogen or lower alkyl

4,371,469
PROCESS FOR THE PREPARATION OF BRANCHED CHAIN FATTY ACIDS AND ESTERS
Thomas A. Foglia, Lafayette Hill; Theodore Perlstein; Yoshio Nakano, both of Philadelphia, and Gerhard Maerker, Oreland, all of Pa., assignors to The United States of America as represented by the Secretary of Agriculture, Washington, D.C.
Filed Apr. 28, 1981, Ser. No. 258,482
Int. Cl.³ C09F *7/08*
U.S. Cl. 260—405.6 **11 Claims**

1. In a process for the preparation of complex mixtures of branched chain fatty acids or esters wherein monounsaturated fatty acids or esters or mixtures thereof are heated in the presence of a catalyst, the steps by which the yield of monomeric branched chain products is substantially increased and the yield of polymeric products is substantially decreased, comprising:

(a) heating a predominantly monounsaturated fatty acid or

ester or mixture thereof at increased pressure in the presence of an acid catalyst and two co-catalysts until the reaction is completed;
(b) cooling the reaction mixture;
(c) venting off gaseous products;
(d) removing the catalyst;
(e) distilling the reaction mixture to separate polymeric by-products; and
(f) separating the branched chain products from the unbranched chain products.

4,371,470
METHOD FOR MANUFACTURING HIGH QUALITY FATTY ACID ESTERS
Tadaaki Matsukura, Yokohama, and Yukio Nakagawa, Tokyo, both of Japan, assignors to Lion Corporation, Tokyo, Japan
Filed Feb. 18, 1981, Ser. No. 235,577
Claims priority, application Japan, Feb. 28, 1980, 55-24335
Int. Cl.^{3} C11C *3/02;* **C09F** *5/08*
U.S. Cl. 260—428 **5 Claims**

1. A method for the preparation of a high-quality lower alkyl ester of a fatty acid which comprises the steps of
(a) esterifying a fatty acid glyceride by a first alcoholysis reaction with a lower alcohol in the presence of an alkali catalyst to form a first crude esterification product and glycerine,
(b) separating the glycerine from the first crude esterification product,
(c) esterifying the first crude esterification product by a second alcoholysis reaction with the lower alcohol in the presence of an alkali catalyst to form a second esterification product containing the unreacted lower alcohol and glycerine as dissolved or dispersed therein,
(d) admixing the second crude esterification product with water in an amount from 30% to 150% by weight based on the amount of the lower alcohol contained in the second crude esterification product,
(e) subjecting the second crude esterification product admixed with water to phase separation into the aqueous layer and layer of the lower alkyl ester of fatty acid,
(f) stripping the lower alkyl ester of fatty acid of the water and unreacted lower alcohol contained therein,
(g) admixing the thus stripped lower alkyl ester of fatty acid with from 1 to 10% by weight of an adsorbent to effect decolorization, and
(h) removing the adsorbent from the thus decolorized lower alkyl ester of fatty acid.

4,371,471
HYDROCARBON STOCK SOLUTIONS OF CR^{+6} COMPOUNDS STORAGE-STABILIZED BY A SOLUBLE PARTIAL ESTER OF A PHOSPHORIC ACID
Bruno de Soyres, Mulhouse, and Jacques Nouvel, Tassin la Demi-Lune, both of France, assignors to Rhone-Poulenc Industries, Paris, France
Filed Jul. 22, 1980, Ser. No. 171,088
Claims priority, application France, Jul. 26, 1979, 79 19738
Int. Cl.^{3} C07F *11/00;* **B01J** *31/12*
U.S. Cl. 260—438.5 R **16 Claims**

1. A composition of matter storage-stabilized against precipitation, comprising a hydrocarbon solvent solution of an organic compound of hexavalent chromium, and including a precipitation stabilizing amount of a partial ester of a phosphoric acid, said partial ester comprising at least one free acid group, O←P—OH, and at least one esterified acid group directly bonded to an acidic phosphorus atom, said esterified acid group being of the formula —OR wherein R is a saturated hydrocarbon radical containing from 1 to 18 carbon atoms, and said partial ester being soluble in said hydrocarbon solvent.

4,371,472
PROCESS FOR PREPARING CYSTEAMINE-S-SUBSTITUTED COMPOUNDS AND DERIVATIVES THEREOF
Tethuharu Okazaki, Sagamihara; Takeo Komukai, Atsugi, and Saburo Uchikuga, Yokohama, all of Japan, assignors to Sogo Pharmaceutical Co. Ltd., Kanagawa, Japan
Filed Feb. 3, 1981, Ser. No. 231,113
Claims priority, application Japan, Feb. 4, 1980, 55-011466
Int. Cl.^{3} C07F *9/02;* **C07C** *161/05*
U.S. Cl. 260—453 RY **2 Claims**

1. A process for preparing a cysteamine-S-substituted compound of the formula:

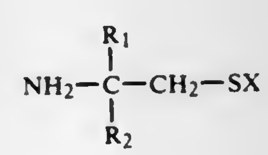

(wherein R_1 and R_2 may be same or different and each represents hydrogen or a lower alkyl group, X is $—SO_3H$, $—PO_3H_2$ or $—PO_3HM$, and M is an alkali metal, ammonium or a ½ alkaline earth metal element),
comprising reacting an ethyleneimine derivative represented by the following formula:

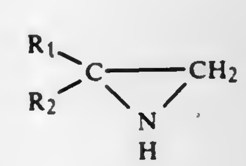

(wherein R_1 and R_2 are as defined above), with a thiosulfate or thiophosphate in the presence of a cation exchanger of the H^+ *form.*

4,371,473
PREPARATION OF 2-(2-FLUORO-4-BIPHENYLYL)PROPIONIC ACID AND CORRESPONDING NITRIDE
Edward J. Zaiko, and Paul F. Ranken, both of Baton Rouge, La., assignors to Ethyl Corporation, Richmond, Va.
Division of Ser. No. 53,060, Jun. 28, 1979, Pat. No. 4,278,516. This application Sep. 22, 1980, Ser. No. 189,779
Int. Cl.^{3} C07C *121/66, 51/08*
U.S. Cl. 260—465 G **7 Claims**

1. A method for the preparation of 2-(2-fluoro-4-biphenylyl)-propionic acid which comprises
(a) reacting a mixture of 2-amino-4-methylbiphenyl, a fluoridizing agent and a diazotizing agent to form 2-fluoro-4-methylbiphenyl,
(b) reacting said 2-fluoro-4-methylbiphenyl with N-bromosuccinimide or bromide under irradiation with light to form 2-fluoro-4-monobromomethylbiphenyl,
(c) reacting said 2-fluoro-4-monobromomethylbiphenyl with an alkali metal cyanide to form 2-(2-fluoro-4-biphenylyl-)acetonitrile,
(d) reacting a mixture of said acetonitrile, a dialkyl carbonate, an alkali metal alkoxide and an alcohol, and then adding methyl bromide and heating the mixture to form 2-(2-fluoro-4-biphenylyl)propionitrile, and then
(e) reacting a mixture of said propionitrile and an alkali metal hydroxide in an aqueous-organic medium to form 2-(2-fluoro-4-biphenylyl)propionic acid.

4,371,474
HYDROCYANATION OF OLEFINS
Morris Rapoport, Orange, Tex., assignor to E. I. Du Pont de Nemours and Company, Wilmington, Del.
Filed Jan. 13, 1982, Ser. No. 339,059
Int. Cl.^{3} C07C *120/02*
U.S. Cl. 260—465.8 R **7 Claims**

1. A continuous process for the hydrocyanation of non-conjugated, ethylenically unsaturated organic nitriles having 4 to 20 carbon atoms to produce the corresponding dinitriles which process comprises conducting the hydrocyanation in the presence of a zero-valent nickel ligand-containing catalyst having the general formula NiL_4 where L is $P(OAr)_3$ and Ar is an aryl or substituted aryl group having up to 18 carbon atoms promoted with an arylborane, maintaining the temperature of the hydrocyanation at less than about 75° C., controlling the amount of hydrogen cyanide relative to other compounds participating in the reaction such that the overall mol ratio of hydrogen cyanide to unsaturated nitrile is in the range of about 0.18/1 to 0.7/1, the overall mol ratio of hydrogen cyanide to zero-valent nickel catalyst in the range of about 10/1 to 116/1 and the overall mol ratio of hydrogen cyanide to promoter in the range about 30/1 to 400/1 and the molar ratio of total ligand to zero-valent nickel introduced as a catalyst in the range 5.0–7.8.

4,371,475
1,4-BIS-STYRYL-BENZENE DERIVATIVES AND A PROCESS FOR THE PREPARATION OF THE SAME
Takao Yanagisawa, Izumiotsu, and Meguru Tanaka, Sennan, both of Japan, assignors to Showa Kagaku Kogyo Company, Ltd., Japan
Continuation of Ser. No. 793,855, May 4, 1977, abandoned. This application Aug. 21, 1978, Ser. No. 935,319
Int. Cl.^{3} C07C *143/42;* **D06P** *1/38;* **C09K** *11/06*
U.S. Cl. 260—512 R **12 Claims**

1. A 1,4-bis-styryl-benzene derivative of the formula

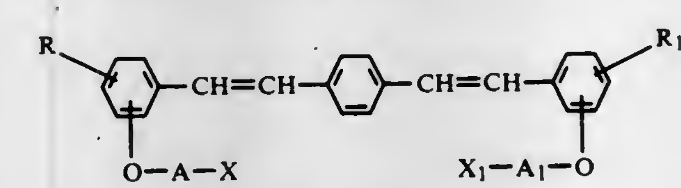

in which R and R_1, which may be same or different, each represent hydrogen atom, halogen atoms, lower alkyl groups or lower alkoxy groups, A and A_1, which may be same or different, each represent lower alkylene groups which may be substituted by halogen atoms, hydroxyl group or lower alkyl groups and X and X_1, which may be same or different, each represent the $—SO_3M$ groups wherein M represents hydrogen atom, an alkali metal, alkaline earth metal, organic ammonium or guanidinium.

4,371,476
MOLD RELEASE AGENTS CONTAINING OXIDATION STABLE POLYOXYALKYLENES
David D. Newkirk, Beaverton, Oreg.; Robert B. Login, Middletown, Pa., and Basil Thir, Grosse Ile, Mich., assignors to BASF Wyandotte Corporation, Wyandotte, Mich.
Continuation-in-part of Ser. No. 72,616, Sep. 5, 1979, abandoned, which is a division of Ser. No. 973,100, Dec. 26, 1978, Pat. No. 4,217,394. This application Dec. 1, 1980, Ser. No. 211,952
The portion of the term of this patent subsequent to Aug. 29, 1995, has been disclaimed.
Int. Cl.^{3} C08C *00/00*
U.S. Cl. 260—709 **13 Claims**

1. A composition having internal mold release properties consisting essentially of a polymer suitable for extrusion, injection, or compression molding selected from the group consisting of natural rubber, styrene-butadiene rubber, neoprene rubber, nitrile rubber, polysulfide rubber, cis-1,4-isoprene rubbers, polyurethane polymers, polyesters, polystyrene, polyamides, and polyvinylchloride and a polyoxyalkylene composition comprising a compound selected from the group consisting of:

$$R—\overset{O}{\overset{\|}{C}}—(O—R_1—O—R_2)_m—O—R_3—O(R_1—O—R_2O)_n—H, \quad (I)$$

$$R—\overset{O}{\overset{\|}{C}}—(O—R_1—OR_2)_m—O—R_3—O(R_1—O—R_2O)_n—\overset{O}{\overset{\|}{C}}—R \quad (II)$$

and

$$R—\overset{O}{\overset{\|}{C}}—(O—R_1—O—R_2—O—R_5)_n—R_4 \quad (III)$$

wherein R is individually selected from an alkyl group having 1 to about 21 carbon atoms, n or m+n have a value to produce a molecular weight of about 300 to about 6000, R_1 and R_2 in the formulas (I) and (III) are the same or different and in formula (II), different alkylene or arylene units derived from ethylene oxide, propylene oxide, butylene oxide and an aromatic glycidyl ether, R_3 is derived from a difunctional phenol, R_5 is derived from an aromatic glycidyl ether, and R_4 is hydrogen, an alkyl group derived from an aliphatic monofunctional alcohol having 1 to about 21 carbon atoms or an acyl group derived from an aliphatic monocarboxylic acid having 2 to about 21 carbon atoms.

4,371,477
DUST CONTROL UNIT
Krzysztof Karowiec; Janusz Sedlaczek, both of Gliwice; Alojzy Mura, Myslowice; Jerzy Pawelczyk, Pyskowice, and Zbigniew Skrzypiec, Katowice, all of Poland, assignors to Centrum Konstrukcyjno-Technologiczne Maszyn Gorniczych "Komag", Gliwice, Poland
Filed Dec. 3, 1980, Ser. No. 212,454
Claims priority, application Poland, Jan. 2, 1980, 221153
Int. Cl.^{3} B01D *47/08*
U.S. Cl. 261—30 **6 Claims**

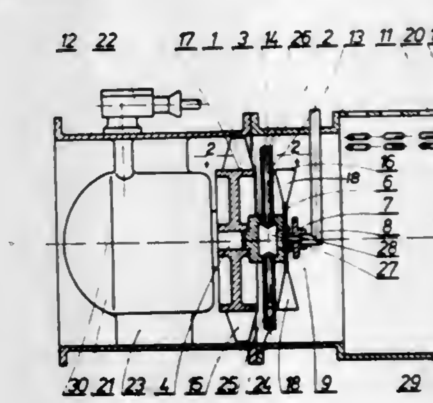

1. An apparatus to control dust by wetting dust particles by means of a water mist, comprising in sequence an air fan impeller, a water-charged impeller having a radial duct terminating at the outer periphery thereof, and a further impeller, all said impellers being disposed on a common driving means and common hub means, all of said impellers being disposed in an air tunnel, the water impeller being provided with an outlet water passage situated above the hub means and disposed laterally relative to said radial duct and at an angle α, in a direction toward said further impeller, the angle α being measured in a direction opposite to that of the rotation of the water impeller, said further impeller being a vane impeller, the outer diameter of the vanes of said vane impeller being less than that of the vanes of the air fan impeller, the vanes of the further impeller being disposed at an angle relative to the face of the

water impeller, the disposed angle being substantially the same as the angle α of the outlet passage.

4,371,478
VARIABLE VENTURI CARBURETOR
Satomi Wada, Obu, Japan, assignor to Aisan Kogyo Kabushiki Kaisha, Japan
Filed Jul. 15, 1981, Ser. No. 283,471
Claims priority, application Japan, Jul. 22, 1980, 55-103604[U]
Int. Cl.³ F02M *9/06*
U.S. Cl. 261—44 C **2 Claims**

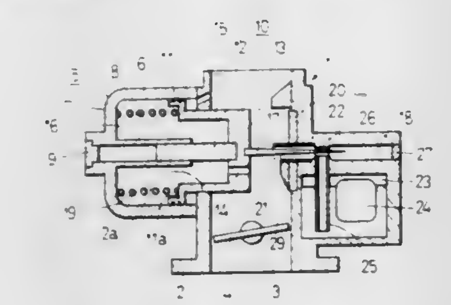

1. In combination with a variable venturi carburetor for an internal combustion engine including a fuel discharging main nozzle arranged in a venturi portion and a suction piston arranged in an opposite side of said main nozzle, said suction piston being reciprocated in response to the variation of negative pressure of air induced to the engine generated at the venturi portion and varying an area of an induction passage of the venturi portion, a variable venturi carburetor comprising a fore-most end of said main nozzle projecting into the venturi portion and a fuel guide member arranged at a lower portion of said fore-most end of said main nozzle for guiding a flow of liquid fuel when the flow rate of air flowing through the venturi portion is low and the liquid fuel is discharged through the main nozzle wherein the width of the upper portion of said fuel guide member is substantially equal to the outer diameter of said main nozzle and the width of the lower portion of said fuel guide member is slightly larger than that of the upper portion thereof and the thickness of said fuel guide member is substantially equal to the lateral projection of the lower portion of said main nozzle at the upper portion thereof and is sequentially reduced from the central portion toward the lower-most end thereof to define a bevel surface.

4,371,479
VARIABLE VENTURI CARBURETOR
Norihiko Nakamura, and Takashi Kato, both of Mishima, Japan, assignors to Toyota Jidosha Kogyo Kabushiki Kaisha, Toyota, Japan
Filed Sep. 23, 1981, Ser. No. 304,914
Claims priority, application Japan, Oct. 7, 1980, 55-139332
Int. Cl.³ F02M *9/06*
U.S. Cl. 261—44 C **9 Claims**

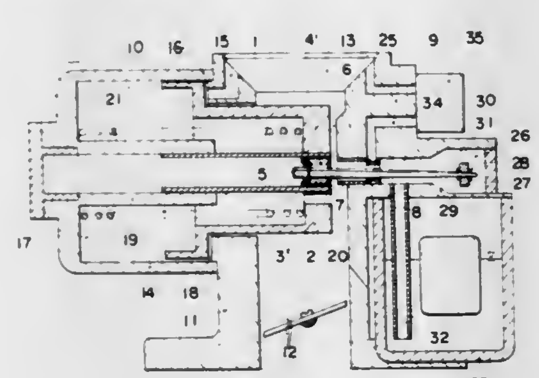

1. A variable venturi carburetor comprising: a suction chamber provided to one side of the venturi; a suction piston slidably inserted in the suction chamber; a biasing spring installed in a needle holder provided in the suction piston head; a metering needle held and biased by the biasing spring in the needle holder, the metering needle being loosely inserted through a main nozzle adapted to pass fuel and bleed air provided in the other side of the venturi opposite to the suction piston and through the metering jet adjacent to the main nozzle in such a manner that the needle can be brought into contact with the metering jet; a well into and from which the front end of the metering needle is made to advance or retract, the well having a large-bore portion and a small-bore portion; and an expanded portion formed at the front end of the metering needle, the expanded portion being sized so that it engages with the small-bore portion when the needle is retracted and is loosely contained in the large-bore portion when advanced; whereby during the low air-intake operating condition the metering needle is urged by the biasing spring to press against the metering jet and during the high air-intake operating condition it is floated centered in the metering jet, thus controlling the quantity of bleed air.

4,371,480
PROPELLER FOR DISTRIBUTING A GASEOUS, POWDERED OR LIQUID MATERIAL IN A LIQUID
Geert H. Vos, Haren, Netherlands, assignor to Noordvos Schroeven B.V., Groningen, Netherlands
Filed Oct. 16, 1979, Ser. No. 85,215
Claims priority, application Netherlands, Apr. 12, 1978, 7803906
Int. Cl.³ B01F *3/04*
U.S. Cl. 261—87 **3 Claims**

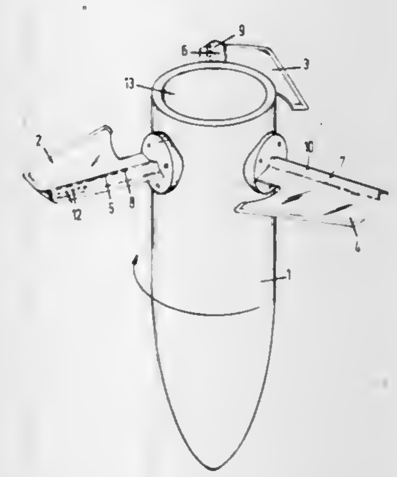

1. Apparatus for effecting mixing of material in a body of liquid comprising:
a propeller having a hub and plural blades extending therefrom, each said blade having a tip and a leading edge and a trailing edge,
said blade having immediately rearwardly of said leading edge a relatively thin, solid portion of chord-wise extent, a relatively thick hollow portion rearwardly of the said solid portion of small cord-wise extent and extending substantially to said tip from said hub, the blade lower camber being substantially planar, the blade upper camber being flat substantially from said leading edge and then rising to a line of maximum thickness rearwardly of the leading edge and close to the trailing edge and then falling, the upper camber being curved forwardly and rearwardly of the line of maximum thickness and having thereunder the said hollow portion, the blade having relatively great chord-wise extent forwardly of said hollow portion, and being substantially flat forwardly of said hollow portion, perforations in said blade communicating said hollow portion with the exterior of said blade, said perforations being down stream of the line of maximum thickness and in a line generally parallel to said line of maximum thickness, and passage means in said hub fluid connected with the hollow portion of each said blade.

4,371,481
IRON-CONTAINING REFRACTORY BALLS FOR RETORTING OIL SHALE
Lyle W. Pollock, Bartlesville, Okla., assignor to Phillips Petroleum Company, Bartlesville, Okla.
Division of Ser. No. 9,627, Feb. 6, 1979, which is a division of Ser. No. 837,130, Sep. 28, 1977, Pat. No. 4,160,719. This application Nov. 24, 1980, Ser. No. 209,926
Int. Cl.³ B01J *2/00*
U.S. Cl. 264—15 **3 Claims**

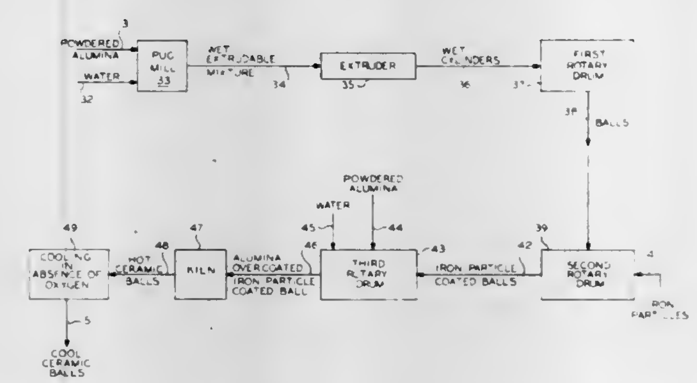

1. A process for preparing iron-containing ceramic balls containing about 10 to 90 weight percent iron and the balance a high refractory alumina, which comprises:
admixing finely divided powdered high-refractory alumina of about 5 to 10 micron particle size and sufficient water to form an extrudable wet admixture,
extruding said wet extrudable admixture to provide wet cylinders of about $\frac{1}{4}\times\frac{1}{4}$ inch to $\frac{1}{2}\times\frac{1}{2}$ inch,
tumbling said wet cylinders sufficiently to reshape said cylinders to ball-shape, thereby providing first size wet alumina balls of about $\frac{1}{4}$ to $\frac{1}{2}$" in diameter,
contacting said first size wet alumina balls with iron particles thereby substantially coating said first size wet alumina balls with iron particles,
admixing said iron particle coated first size alumina balls with further water and powdered high-refractory alumina thereby over-coating further high-refractory alumina over said iron particles and forming second size alumina over-coated iron particle-coated alumina balls,
heating the resulting second-size over-coated balls to a temperature of about 2800° F. to 3400° F. for a time sufficient to convert said second-size balls to iron-containing ceramic balls, and
cooling said fired ceramic balls in the substantial absence of molecular oxygen,
wherein said iron-containing ceramic balls contain an inner alumina-core, a shell of iron-particles around said core, and an outer coating of ceramic alumina.

4,371,482
METHOD OF DETERMINING OPTICAL QUALITY OF A SHAPED ARTICLE
Aloysius W. Farabaugh, Verona, Pa., assignor to PPG Industries, Inc., Pittsburgh, Pa.
Division of Ser. No. 62,832, Aug. 1, 1979, Pat. No. 4,285,745. This application Jan. 16, 1981, Ser. No. 225,585
Int. Cl.³ B29C *17/02;* **G01N** *21/32*
U.S. Cl. 264—40.1 **9 Claims**

1. A method of controlling an article shaping process, wherein the shaping process includes the step of altering physical dimensions of an article, comprising the steps of:
prior to the practice of the altering step, practicing on a selected article the steps of:
scanning the selected article to generate an optical profile of the selected article, and
altering portions of the optical profile to provide an expected optical profile of the selected article after the practice of the altering step;
practicing the altering step to provide a worked article;
generating an optical profile of the worked article;
comparing the optical profile of the worked article to the expected optical profile of the unworked article to determine differences between the profiles; and

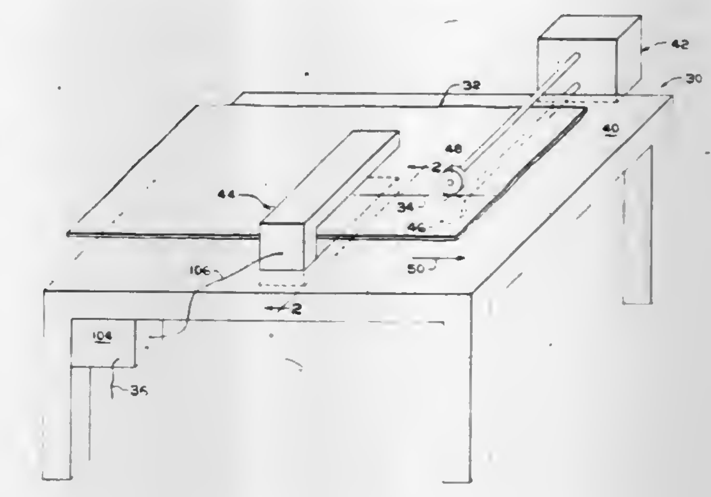

changing the altering step based on the differences determined from said comparing step.

4,371,483
APPARATUS AND PROCESS FOR VULCANIZING, ADJUSTED FOR VARIABLE LOCATION OF POINT OF LEAST CURE
William F. Mattson, Hinckley, Ohio, assignor to The B. F. Goodrich Company, New York, N.Y.
Filed Jan. 11, 1982, Ser. No. 338,830
Int. Cl.³ B29H *5/02*
U.S. Cl. 264—40.6 **21 Claims**

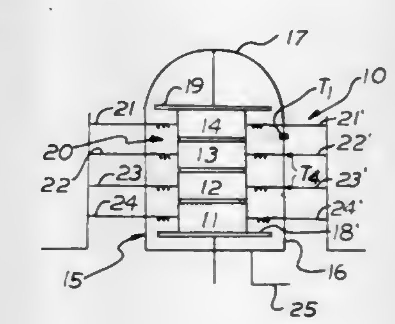

1. A method for curing an article from a curable synthetic resinous material in a reusable mold defining a split mold cavity in which a green article of said curable material is to be contacted internally with a heat transfer fluid, and externally by said split mold which is included in a curing means, comprising:
(a) sensing the ambient temperature at which said green article is placed in said mold,
(b) closing said mold, and heating said green article sufficiently to maintain said article at a temperature within a predetermined range of curing temperature until the desired cure of said material is effected,
(c) sensing at least two boundary temperature conditions while said material is being cured, a first of said conditions being determined by temperature external to the body of said article, and a second of said conditions being determined by temperature internal to said body,
(d) continually sensing said first and second boundary conditions during the time period between closure of said curing means and termination of cure,
(e) selecting at least three points along a path within the body of said article, to determine the point of least cure within said article,
(f) repetitively calculating at frequent periodic intervals after closure of said curing means, temperatures along said path

at each one of said three points as a function of time, thermal diffusivity of said material, and the mass and geometry of said tire, so as to track and locate said point of least cure,

(g) computing the number of cure equivalents actually delivered to the point of least cure,

(h) matching the number of cure equivalents computed as having been actually delivered at said point of least cure with a predetermined cure equivalent goal at said point of least cure,

(i) terminating curing of said article when the number of cure equivalents actually delivered at the point of least cure so tracked and located matches the cure equivalent goal, and,

(j) opening said curing means to remove the cured article.

4,371,484

PROCESS FOR MAKING POROUS SINTERED BODY OF CALCIUM PHOSPHATE

Takao Inukai; Yoshiaki Fukuda, and Mikiya Ono, all of Yokoze, Japan, assignors to Mitsubishi Mining & Cement Co., Ltd., Tokyo, Japan

Filed May 27, 1981, Ser. No. 267,970

Claims priority, application Japan, Jun. 13, 1980, 55-78919

Int. Cl.^{3} B29H *7/20*

U.S. Cl. 264—44 **15 Claims**

1. A process for making a porous sintered body of calcium phosphate having continuous and fine pores distributed uniformly throughout the porous body, comprising the steps of:

preparing a slurry of amorphous calcium phosphate having a molar ratio of calcium to phosphor ranging within 1.59 to 1.80;

adding a foaming agent to said slurry;

dipping a porous body of an organic material having continuous and fine void channels into said slurry prior to or after foaming said slurry to allow said slurry to adhere on the internal walls of said void channels;

heating said porous body of said organic material at a temperature high enough for decomposing said organic material to varnish into smoke and concurrently for thermally converting said amorphous calcium phosphate into hydroxyapatite to form a network of hydroxyapatite; and

sintering said network of hydroxyapatite to form said porous sintered body.

4,371,485

PROCESS FOR MAKING HYDROPHILIC POLYESTER FIBER

Nikolaus Mathes, Breuberg; Wolfgang Lange, Obernburg, and Klaus Gerlach, Aschaffenburg, all of Fed. Rep. of Germany, assignors to Akzona Incorporated, Asheville, N.C.

Filed Dec. 11, 1980, Ser. No. 215,583

Claims priority, application Fed. Rep. of Germany, Dec. 12, 1977, 2755341

Int. Cl.^{3} B29D *7/00*

U.S. Cl. 264—46.1 **14 Claims**

1. A process for the production of hydrophilic polyester fibers having a moisture regain of at least about 2% measured at 40° C. and a relative humidity of 92%, comprising

(a) melt spinning a polyester mass comprising a suitable polyester blended with an effective amount of one or more oxalato complexes of the general formula:

$$M_n[Z(C_2O_4)_m],$$

wherein:

M = at least one of the ions Li, Na, K, Rb, or Cs;

Z = one or more complex-forming central atoms selected from the group Mg, Ca, Sr, Ba, Zr, Hf, Ce, V, Cr, Mn, Fe, Co, Ni, Cu, Zn, Cd, B, Al, Ga, In, Sn, Pb, and Sb;

$n \approx 1$, ≈ 2, ≈ 3 or ≈ 4; and

$m \approx 2$, ≈ 3, ≈ 4;

sufficient to effect said moisture regain and forming meltspun filaments;

(b) drawing the meltspun filaments; and

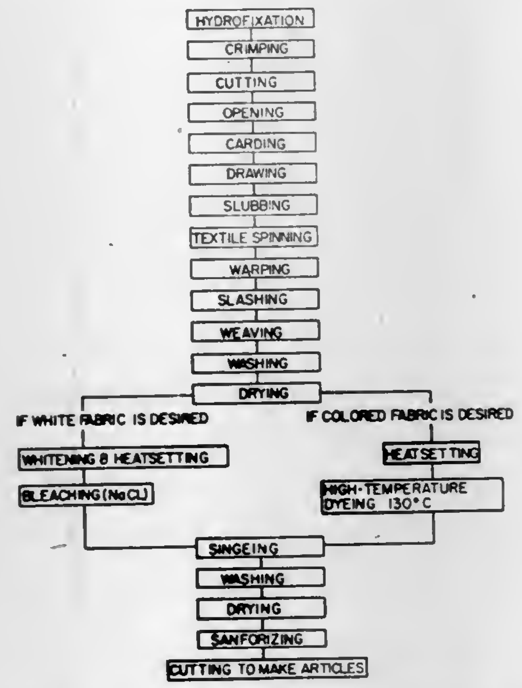

(c) hydrosetting said filaments in the presence of an effective amount of liquid water at an effective temperature for an effective time.

4,371,486

METHOD OF FILLING THE CAVITY OF A BUILDING BLOCK WITH AN AMINOPLAST RESIN FOAM INVOLVING REDUCED ADHESION OF THE RESIN TO THE FILLING APPARATUS

Dennis H. Ogden, Wolverhampton, England, assignor to British Industrial Plastics Limited, Manchester, England

Filed Jun. 12, 1981, Ser. No. 273,188

Claims priority, application United Kingdom, Jun. 20, 1980, 8020189

Int. Cl.^{3} B29D *27/04*

U.S. Cl. 264—46.6 **6 Claims**

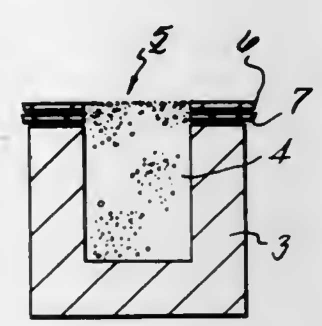

1. A method of filling a cavity in a building block with aminoplast resin foam, the method comprising the steps of:

(1) locating a template against and in sealing relation to that face of the block having said cavity opening therefrom, so that an aperture defined in said template, whose dimensions are at least as large as the dimensions of the cavity opening in the block which communicates with the cavity, is aligned and registered with said opening, followed by

(2) passing curable aminoplast resin foam into the cavity under pressure to fill said cavity and form an upstand of foam relative to the face of the block in the space defined by the thickness of the template, and then

(3) removing the template to leave at least some of said foam upstand projecting from said face.

4,371,487

PROCESS FOR THE PRODUCTION OF A HOLLOW FIBER SEMIPERMEABLE MEMBRANE

Kaduto Hamada; Zitumi Takata, and Katuhisa Numata, all of Otsu, Japan, assignors to Toyoboseki Kabushiki Kaisha, Osaka, Japan

Filed Oct. 30, 1979, Ser. No. 89,676

Claims priority, application Japan, Feb. 11, 1978, 53/135494

Int. Cl.^{3} B29D *27/00*

U.S. Cl. 264—49 **5 Claims**

1. A process for the production of a hollow fiber membrane, which comprises forming a spinning solution consisting essentially of cellulose triacetate and an organic acid in N-methyl-2-pyrrolidone having a cellulose triacetate content of 30 to 60% by weight and an organic acid content of 0.02 to 3.0% by weight based on the total weight of the spinning solution, extruding the spinning solution through a spinneret into a gaseous atmosphere, and immersing the resultant spun fiber in an aqueous coagulation bath.

4,371,488

METHOD AND APPARATUS FOR EXTRUDING FOAMED BODIES INVOLVING THE USE OF ADJUSTABLE TRACTION SHAPING ROLLS

Arthur L. Phipps, Tallmadge, and Ben Stoyanov, Akron, both of Ohio, assignors to U.C. Industries, Tallmadge, Ohio

Filed Apr. 2, 1981, Ser. No. 250,266

Int. Cl.^{3} B29D *27/00;* **B29F** *3/01;* **B29D** *7/24*

U.S. Cl. 264—51 **28 Claims**

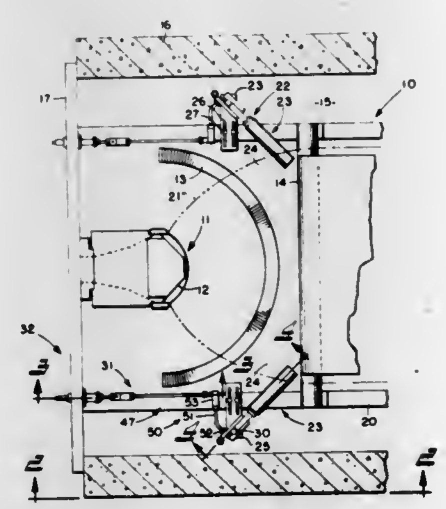

1. A method of controlling and shaping a foaming extrudate exiting from a die orifice, comprising the steps of directing the extrudate through and in engagement with a set of rolls that extend at least substantially across the surfaces of the extrudate on opposite sides thereof, further directing only the opposite edge portions of the extrudate through and in engagement with respective pairs of further rolls downstream of the set of rolls, and adjusting such respective pairs of further rolls for controlled edge forming of the extrudate.

4,371,489

PRODUCTION OF ANTI-STATIC THERMOPLASTICS FILMS

Patrick T. McGrail, Hitchin, England, assignor to Imperial Chemical Industries Limited, London, England

Filed Oct. 15, 1980, Ser. No. 197,239

Claims priority, application United Kingdom, Oct. 19, 1979, 7936427; Feb. 1, 1980, 8003460

Int. Cl.^{3} B29D *7/02, 7/24*

U.S. Cl. 264—129 **6 Claims**

1. A process for the production of a molecularly oriented thermoplastics film having an antistatic coating layer which comprises melt extruding a self-supporting thermoplastics film, molecularly orienting the extruded film by stretching in at least one direction and applying a coating layer to at least one side of the film before the commencement of or during the molecular orientation, wherein the coating layer is applied from a film-forming composition comprising:

(i) a copolymer comprising as its major component comonomeric units of one or more alkyl esters of acrylic and methacrylic acids which is cross-linkable by means of cross-linking functional groups contained in the copolymer;

(ii) a cross-linking agent for the copolymer selected from the class consisting of condensation products of amines with aldehydes; and

(iii) an aqueous solution of at least one partially neutralized acidic phosphate ester, the phosphate ester being chosen from compounds of the following structure:

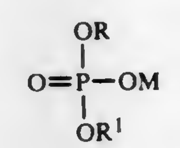

wherein

R represents an unreactive hydrocarbon radical optionally containing unreactive substituents and having a total of not more than 10 carbon atoms;

R[1] represents an unreactive hydrocarbon radical optionally containing unreactive substituents and having a total of not more than 10 carbon atoms or is sodium or potassium, ammonium, an amine cation or hydrogen;

M is sodium or potassium, ammonium, an amine cation, or hydrogen; wherein said aqueous solution of said phosphate ester, prior to its addition to the components of the composition which cross-link, has been prepared by partially neutralizing the corresponding acidic phosphate ester with potassium hydroxide or sodium hydroxide in an aqueous medium to a pH of 1.7 to 5 and then rendering the partially neutralized ester alkaline to a pH in the range of 7.5 to 10 by treatment with a volatile base, said volatile base being volatile at the temperature prevailing during the stretching and/or heat-setting steps which follow the application of the film-forming composition, and the amount of phosphate ester in the film-forming composition is in the range 12.5 to 100% by weight expressed as the weight of the corresponding unneutralised acid phosphate ester and based on the solids content of the rest of the composition.

4,371,490

CHEESE MOULD AND/OR FOLLOWER WITH ROUGHENED INNER SURFACE AND METHOD FOR MAKING SAME

Bernard T. Geessink, Frans Halslaan 5, Musselkanaal, Netherlands

Filed Feb. 18, 1981, Ser. No. 235,603

Claims priority, application Netherlands, Feb. 20, 1980, 8001029

Int. Cl.^{3} A23C *19/05;* **B29C** *17/12, 25/00*

U.S. Cl. 264—162 **12 Claims**

1. Cheese mould provided with a wall of plastic material with fine holes for draining away the whey and a roughened non-smooth inner surface provided with a regular pattern of grooves, and superimposed upon this pattern, fine scratches in an irregular pattern.

4,371,491

PROCESS FOR THE CONTINUOUS SPINNING OF VISCOSE RAYON

Tommaso Benai, Rieti; Novello Leoncini, Limbiate, and Ugo Paoletti, Monza, all of Italy, assignors to Snia Viscosa Societa' Nazionale Industria Applicazioni Viscosa S.p.A., Milan, Italy

Filed Jan. 9, 1981, Ser. No. 223,926

Claims priority, application Italy, Jan. 9, 1980, 19109 A/80

Int. Cl.³ D01F *2/06*

U.S. Cl. 264—196 **4 Claims**

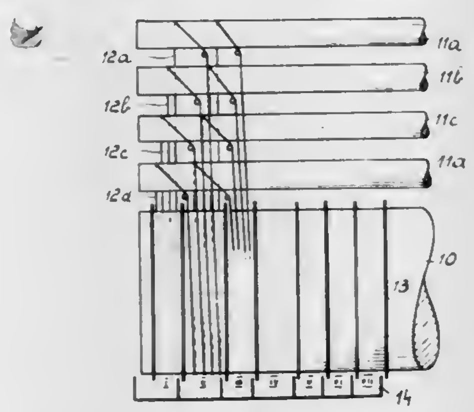

1. In a process for the continuous spinning of viscose rayon comprising continuously carrying out the steps of: coagulating and drawing the rayon yarn, and setting the yarn, the improvement which consists essentially of subjecting the yarn to a first setting treatment at 65° to 85° C. with a first aqueous bath containing from 30 to 70 g/l of H_2SO_4, 60 to 140 g/l of Na_2SO_4 and from 1.8 to 4.2 g/l of $ZnSO_4$; thereafter subjecting the yarn to a second setting treatment at 50° to 70° C. with a second aqueous bath containing from 15 to 35 g/l of H_2SO_4, 30 to 70 g/l of Na_2SO_4 and from 0.9 to 2.1 g/l of $ZnSO_4$, and washing the yarn, all of said steps being carried out continuously said second setting treatment being at a lower temperature and acidity than the first setting treatment such that the sulphurous salts in the yarn are substantially eliminated by the combined first and second setting treatments.

4,371,492

METHOD OF MANUFACTURING ELECTRODE SUPPORTING BASE PLATE FOR RADIATION DETECTOR

Moriyoshi Murata, Otawara, Japan, assignor to Tokyo Shibaura Denki Kabushiki Kaisha, Japan

Filed Sep. 15, 1981, Ser. No. 302,698

Claims priority, application Japan, Sep. 17, 1980, 55/128848

Int. Cl.³ B29C *1/02*

U.S. Cl. 264—226 **7 Claims**

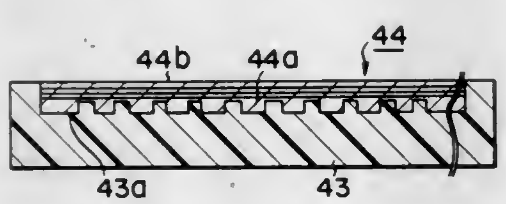

1. A method for manufacturing an electrode supporting base plate for a radiation detector for alternately arranging a plurality of high voltage electrodes and signal detecting electrodes, respectively, comprising the steps of:

preparing a master of said base plate by processing with high precision a material having a small thermal expansion coefficient;

transferring a pattern of said master to an elastic molding material to prepare an elastic transfer mold; and

injecting a resin in said transfer mold, curing the resin, and removing said electrode supporting base plate from said transfer mold.

4,371,493

METHOD OF MAKING BOUNCING SILICONE PUTTY-LIKE COMPOSITIONS

Maurice A. Minuto, 15 Hemingway Dr., Dixhill, N.Y. 11746

Filed Sep. 2, 1980, Ser. No. 183,466

Int. Cl.³ B29C *25/00*

U.S. Cl. 264—236 **4 Claims**

1. A method of making bouncing silicone putty-like substance which comprises:

(a) mixing a vulcanizable silicone polymer with a boron compound and a reinforcing filler and making a sheet stock of the resulting mixture,

(b) placing said sheet stock in an oven containing at least one perforated tray and cooking the sheet stock at a temperature of from about 350° F. to about 500° F. for several hours,

(c) removing the volatiles produced during the cooking operation described in step (b) from said oven by passing air through said perforated tray, and

(d) cooling the sheet stock.

4,371,494

METHOD FOR MANUFACTURING A THERMOPLASTIC CYLINDRICAL CLAMP

Jack V. Miller, Sierra Madre, Calif., assignor to Gravity Guidance, Incorporated, Pasadena, Calif.

Filed Nov. 3, 1980, Ser. No. 203,336

Int. Cl.³ B29C *17/04*

U.S. Cl. 264—522 **4 Claims**

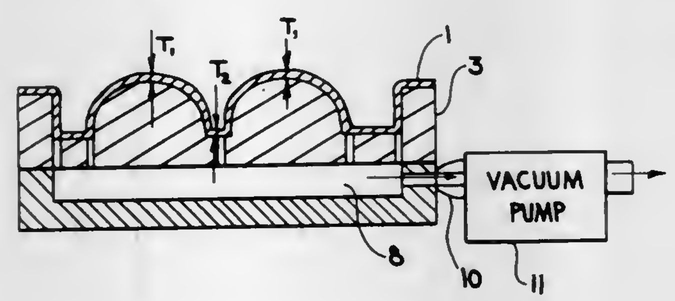

1. A method for manufacturing a thermoplastic open ended cylindrical clamp including the following steps:

heating a flat sheet of thermoplastic material to its softening point;

providing a mold having two semicylindrical shapes in a parallel relationship with a narrow planar surface therebetween and a coplanar flange surrounding the semicylinders, said planar surface being sufficiently narrow that plastic thermoformed over the mold will be locally stretch-thinned at said planar surface to a thickness no greater than 60% of the original sheet thickness;

thermoforming the softened plastic sheet over the mold thereby forming a pair of spaced apart semicylindrical portions connected together by a thinned planar portion positioned therebetween and each having an extreme flange along one side thereof;

trimming the sheet to a form wherein the semicylindrical portions are open at each end;

applying sufficient localized heat to the planar portion between the semicylindrical portions to re-soften the plastic;

bending the locally re-softened planar portion approximately 180° so the extreme flanges along one side of semicylindrical portion are juxtaposed as the semicylindrical portions form a complete cylinder; and

cooling the plastic part in the cylindrical shape suitable for clamping a generally cylindrical object therein,

said trimming step including trimming each said extreme flange in the shape of a hook so configured as to permit suspension of the clamp and an object clamped therein from a bar,

said thermoforming step including thermoforming a stiffening rib as a projection from each semicylindrical portion substantially through the length of the portion of the juxtaposed flange to be trimmed in the shape of a hook.

4,371,495

SELF RUPTURING GAS MODERATOR ROD FOR A NUCLEAR REACTOR

George R. Marlatt, Monroeville, Pa., assignor to Westinghouse Electric Corp., Pittsburgh, Pa.

Filed Jan. 23, 1981, Ser. No. 228,007

Int. Cl.³ G21C *7/26*

U.S. Cl. 376—209 **4 Claims**

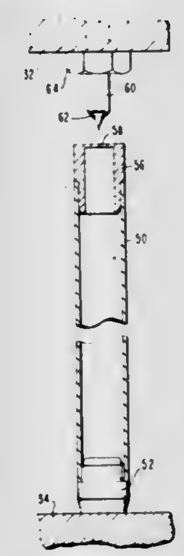

1. A nuclear reactor comprising:

a plurality of fuel assemblies, each of said assemblies having top and bottom nozzles with fuel rods and control rod guide tubes interposed therebetween;

at least one gas-filled tube in a portion of said assemblies, said tube extending substantially the full length of said assembly having its bottom end resting on the upper surface of said lower nozzle;

a spike immovably mounted in the lower plate of the top nozzle and having its point directed downwardly toward the top of said gas-filled tube, the point on said spike and top of said rod being spaced a distance equal to the amount the rod will expand during operation in a reactor, minus a distance sufficient for the spike to pierce the top of said tube and permit the gas therein to be displaced by water coolant circulating through the reactor.

4,371,496

POSITION INDICATION SYSTEM

Charles A. Lawson, II, Linthicum Heights, Md., and Wayne L. Dufek, Stewartstown, Pa., assignors to Westinghouse Electric Corp., Pittsburgh, Pa.

Filed Jun. 18, 1980, Ser. No. 160,528

Int. Cl.³ G21C *17/00;* **G01R** *33/00*

U.S. Cl. 376—258 **5 Claims**

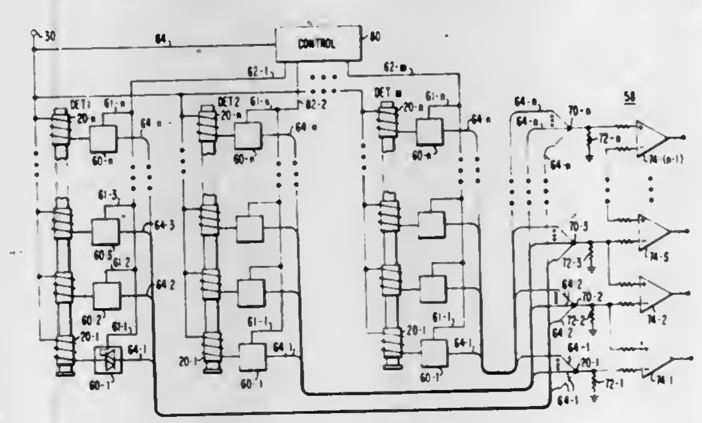

1. A position detection system for a plurality of longitudinally movable members each movable within respective housings between first and second limits, comprising:

(a) a plurality of detectors each having at least a first group of coils disposed along the path of movement of a respective movable member, each said coil experiencing a change of impedance when in proximity to said member;

(b) each said coil having first and second ends;

(c) means for connecting the first ends of all of said coils to a source of AC signal;

(d) a plurality of differential amplifiers each having first and second inputs;

(e) means connecting adjacent ones of said coils of each said detector to first and second respective inputs of a respective differential amplifier of said above plurality;

(f) said connecting means including a plurality of sets of bilateral switches, each set connected to the second ends of respective coils of a detector with each switch having input means for receiving a control signal to enable bilateral conduction of said switch;

(g) control means for supplying said control signal to individual sets of said switches, in sequence.

4,371,497

INHIBITION OF CORROSION WITH THIAZINE QUATERNARY AMMONIUM SALTS OF POLYEPIHALOPHYDRIN

Patrick M. Quinlan, Webster Groves, Mo., assignor to Petrolite Corporation, St. Louis, Mo.

Division of Ser. No. 32,036, Apr. 23, 1979, Pat. No. 4,316,007. This application Jun. 9, 1981, Ser. No. 271,896

Int. Cl.³ C08G *59/50;* **C23F** *11/04*

U.S. Cl. 422—12 **12 Claims**

1. A process of inhibiting corrosion of metal in contact with a corrosive medium which comprises adding to said corrosive medium a corrosion-inhibiting amount of a thiazine quaternary salt of polyepihalohydrin wherein the nitrogen atom of the thiazine moiety is attached to the polymeric chain through a —CH_2— group.

4,371,498

CODED CUVETTE FOR USE IN TESTING APPARATUS

Richard E. Scordato, Scarsdale, N.Y., and Robert J. Varca, Fort Lee, N.J., assignors to Medical Laboratory Automation, Inc., Mount Vernon, N.Y.

Filed Jun. 19, 1981, Ser. No. 275,419

Int. Cl.³ G01N *35/00;* **B01L** *3/00*

U.S. Cl. 422—102 **7 Claims**

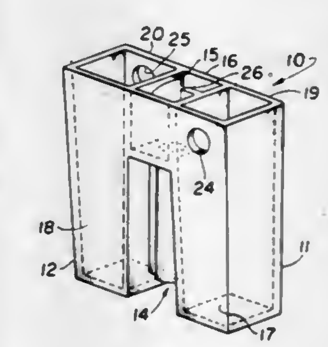

1. A dual cuvette adapted for use in a photometric blood testing apparatus, said cuvette comprising a pair of spaced apart flat sided sample receptacles, connecting means for joining the pair of receptacles to form an integral dual cuvette, said connecting means having a pair of opposite side walls coplanar with the sidewalls of said cuvette receptacles and extending from the top edge of said receptacles downwardly a distance less than the height of a cuvette receptacle and a bottom wall joining the bottom edges of said sidewalls, with a cylindrically shaped locating member depending from said bottom wall and centrally positioned between said pair of sample receptacles by which the cuvette can be mechanically positioned and secured

in the testing station of the blood testing apparatus, and machine readable code means being provided on at least one side wall of the cuvette to enable the testing apparatus to sense the code and determine the reagent to be added to and the test to be performed on samples contained in the cuvette receptacles.

4,371,499
CONTROL OF A FLUID CATALYTIC CRACKING UNIT
William B. Bard; John O. Walters, both of Bartlesville, Okla., assignor to Phillips Petroleum Company, Bartlesville, Okla.
Filed Apr. 30, 1981, Ser. No. 258,974
Int. Cl.[3] C10G *11/18;* G05D *7/00;* F27B *15/00*
U.S. Cl. 422—111 **20 Claims**

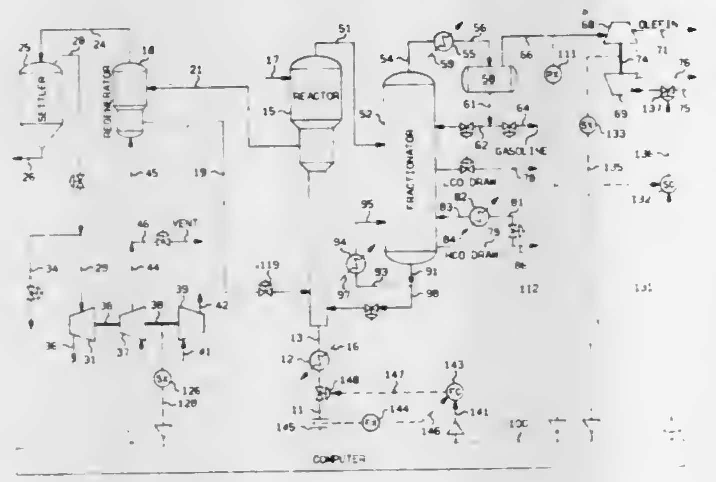

1. Apparatus comprising:
a reactor;
a catalyst regenerator;
a fractionator;
means for supplying a feed to said reactor;
means for supplying a regenerated cracking catalyst from said catalyst regenerator to said reactor;
means for removing cracking catalyst contaminated by carbon from said reactor and for supplying the thus removed cracking catalyst to said catalyst regenerator;
air blower means for supplying a free oxygen-containing gas to said regenerator;
means for removing hot flue gases from said catalyst regenerator;
means for removing the products produced by the cracking of said feed from said reactor and for supplying the thus removed products as a feed to said fractionator;
cooling means;
accumulator means;
means for withdrawing an overhead stream from said fractionator and for supplying the thus withdrawn overhead stream through said cooling means to said accumulator means;
a compressor;
means for withdrawing uncondensed vapors from said accumulator means and for supplying the thus withdrawn uncondensed vapors to the suction inlet of said compressor;
means for establishing a first signal representative of the actual speed of said air blower means;
means for establishing a second signal representative of the highest desired speed for said air blower means;
means for comparing said first signal and said second signal and for establishing a third signal which is representative of a first desired suction pressure for said compressor;
means for manipulating the speed of said compressor in response to said third signal;
means for establishing a fourth signal representative of the actual speed of said compressor;
means for establishing a fifth signal representative of the highest desired speed for said compressor;
means for comparing said fourth signal and said fifth signal and for establishing a sixth signal which is representative of a first feed flow rate; and
means for manipulating the flow of feed to said reactor in response to said sixth signal.

11. A method for controlling a fluid catalytic cracking unit, wherein a feed provided to a reactor is contacted with a regenerated cracking catalyst provided to the reactor from a catalyst regenerator to produce a product stream which is provided from said reactor to a fractionator, wherein cracking catalyst contaminated by carbon is provided from said reactor to said catalyst regenerator and contacted with a free oxygen-containing gas provided to said catalyst regenerator from an air blower to produce said regenerated catalyst with the resulting hot gases being removed from said catalyst regenerator as a flue gas, and wherein an overhead stream is withdrawn from said fractionator and partially condensed with the uncondensed portion of said overhead stream being provided to the suction inlet of a compressor, said method comprising the steps of:
selecting said air blower for base loading;
establishing a first signal representative of the actual speed of said air blower;
establishing a second signal representative of the highest desired speed for said air blower;
comparing said first signal and said second signal and establishing a third signal which is representative of a first desired suction pressure for said compressor;
manipulating the speed of said compressor in response to said third signal;
establishing a fourth signal representative of the actual speed of said compressor;
establishing a fifth signal representative of the highest desired speed for said compressor;
comparing said fourth signal and said fifth signal and establishing a sixth signal which is representative of a first feed flow rate; and
manipulating the flow of feed to said reactor in response to said sixth signal.

4,371,500
APPARATUS FOR GENERATING HYDROGEN
Ronald I. Papineau, Goshen, Mass., assignor to Unique Energy Systems, Inc., Holyoke, Mass.
Continuation of Ser. No. 921,000, Jun. 30, 1979, abandoned. This application Aug. 5, 1980, Ser. No. 175,597
Int. Cl.[3] B01J *8/06;* C01B *3/08, 3/10*
U.S. Cl. 422—115 **18 Claims**

1. A hydrogen generator comprising:
a reactor including a plurality of longitudinal parallel tubes;
porous material supported within each of said tubes, for providing hydrogen from water;
means operatively connected to said reactor for providing heat to said tubes to elevate the temperatures thereof for the generation of the hydrogen;
means connected to said reactor for supplying water at elevated temperatures to said tubes, wherein, at the elevated temperatures and in the presence of said porous material, hydrogen is generated;
said porous material being positioned in said tubes to permit the hydrogen to diffuse therethrough, the pores of said material being sufficiently small to inhibit passage of water for separating the hydrogen from other products of the disassociation of the water; and
transverse and radial passages at each end of said tubes which connect said longitudinal tubes to each other, to atmosphere and to said water supply means, said passages

including means adapted to receive closures therein so as to provide for selective closing and/or communication

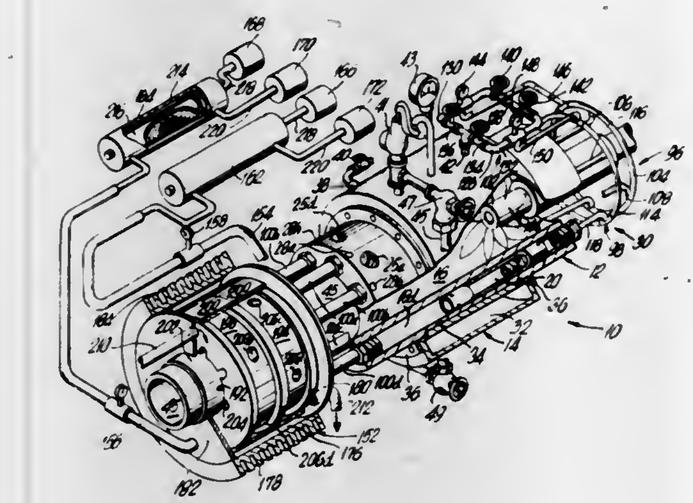

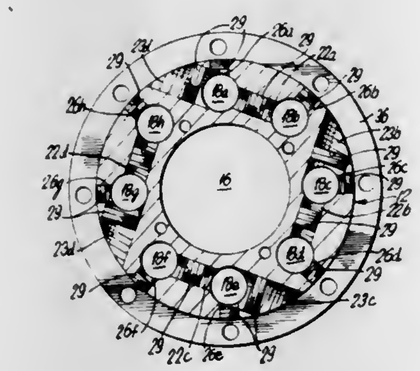

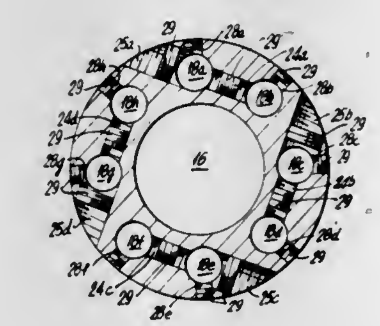

therebetween, thereby providing a reactor of optimum operational flexibility.

4,371,501
FLUID CATALYST REGENERATION APPARATUS
Anthony G. Vickers, Arlington Heights, Ill., assignor to UOP Inc., Des Plaines, Ill.
Division of Ser. No. 118,372, Feb. 4, 1980, Pat. No. 4,309,308, which is a continuation-in-part of Ser. No. 969,607, Dec. 14, 1978, Pat. No. 4,219,442. This application Sep. 17, 1981, Ser. No. 303,256
The portion of the term of this patent subsequent to Jan. 6, 1998, has been disclaimed.
Int. Cl.[3] F27B *15/08;* B01J *21/20, 29/38;* C10G *11/18*
U.S. Cl. 422—142 **2 Claims**

1. An apparatus for regenerating a coke-contaminated, fluid catalyst which apparatus comprises in combination:
(a) a vertically oriented combustion chamber;
(b) a spent catalyst inlet conduit for gas and fluid catalyst connecting with the lower portion of said combustion chamber;
(c) fluid catalyst collecting means disposed within an upper portion of said combustion chamber;
(d) a first catalyst withdrawal conduit, connecting with said catalyst collecting means, for withdrawal of collected regenerated fluid catalysts from said combustion chamber;
(e) a heat removal chamber located super adjacent to said combustion chamber and in communication therewith;
(f) heat removal means disposed within said heat removal chamber;
(g) a second catalyst withdrawal conduit connected at one end to said heat removal chamber for withdrawing regenerated fluid catalyst from said heat removal chamber; and
(h) a mixing conduit connected at one end to said second withdrawal conduit and at the other end to said first withdrawal conduit, such that regenerated fluid catalyst from said heat removal chamber can pass into said first withdrawal conduit, and (i) a control system for said

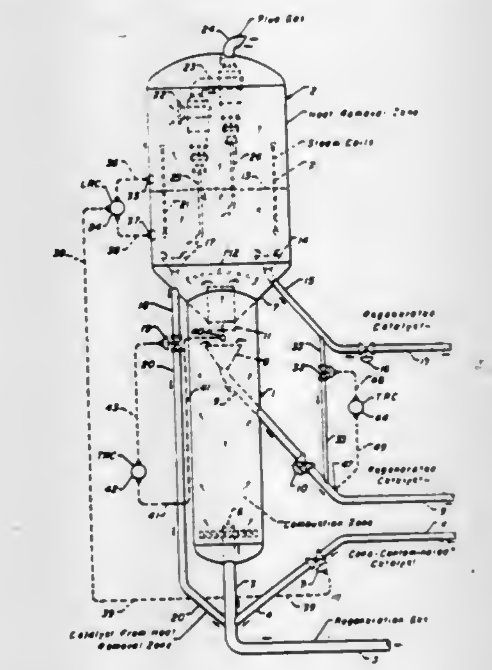

apparatus comprising means to sense the catalyst temperature in said first withdrawal conduit at a locus downstream of the locus where said mixing conduit connects to said first withdrawal conduit, temperature control means having an adjustable set point connecting with said temperature sensing means and developing an output signal, flow control means regulating the rate of flow of regenerated catalyst through said mixing conduit, and means for transmitting said output signal to said flow control means whereby the latter is adjusted responsive to said catalyst temperature.

4,371,502
CRYSTAL GROWING FURNACE PULLING HEAD
Clifton B. Sibley, Needham, and Robert P. Bell, Wellesly, both of Mass., assignors to Ferrofluidics Corporation, Nashua, N.H.
Continuation of Ser. No. 119,913, Feb. 8, 1980, abandoned. This application Mar. 30, 1981, Ser. No. 249,196
Int. Cl.[3] C30B *15/32*
U.S. Cl. 422—249 **14 Claims**

10. A Czochralski-type crystal-growing furnace apparatus for drawing a crystal from a melt, which apparatus comprises:
(a) crucible means for containing a melt from which a crystal is to be drawn;
(b) pulling-head means for drawing a crystal along a vertical axis from the melt in the crucible means;
(c) means to provide relative rotation about the vertical axis between the melt and the crystal drawn therefrom;
(d) seed-holder means for securing a seeded crystal drawn from the melt;
(e) chain means having a plurality of flexibly coupled links comprising a plurality of connected, generally uniform, spherical bead elements, the chain means having a one end and another free end, the chain means secured at the one end to the seed-holder means and adapted to move the seed-holder means along the vertical axis;
(f) a chamber means surrounding the crucible means and the pulling-head means, to maintain a hermetically sealed

environment for the drawing of a seeded crystal from the melt; and

(g) take-up means in cooperative engagement with the chain means, to move the seed-holder means and the seeded crystal grasped thereby along the vertical axis, which take-up means includes

(i) sprocket means which comprises a driven cylinder including teeth spaced along the periphery and having a plurality of shaped pockets on the peripheral surface of the means, which shaped pockets of the teeth conform to the general shape of and are adapted to engage cooperatively at least a portion of the flexibly coupled links of the chain means, an intermediate portion of the chain means between the one and the other free end passing

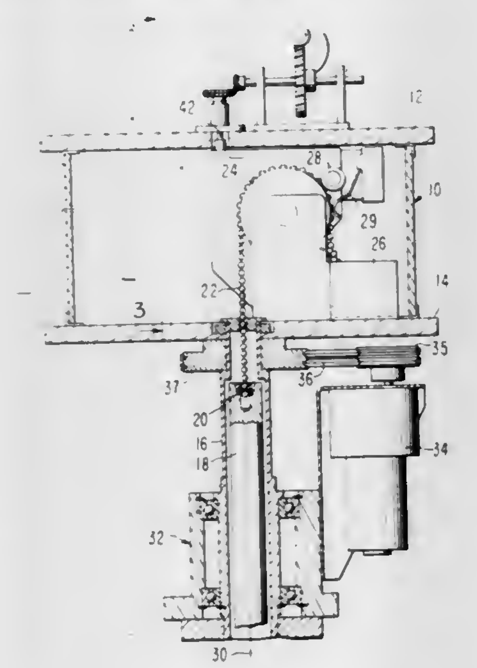

over the surface of the sprocket means and the flexibly coupled links in a cooperative tensioned engagement with the pockets on the surface, said sprocket means disposed to align a vertically oriented tangent from said sprocket means congruent with said vertical axis,

(ii) means to rotate the sprocket means to move the chain means, so that the seed holder will move along a vertical axis, and

(iii) containment means, which comprises a portion of the interior volume of said chamber means, to receive or discharge the free, untensioned other end of the chain means, as the sprocket means drives the chain means along the vertical axis, raising or lowering the seed holder.

4,371,503

APPARATUS FOR THE VAPORIZATION OF ALUMINUM TRICHLORIDE

Dietmar Aichelmann, Hermann-Steinegger-Strasse 77; Karl Kannenberg, Friedrich-Ebert-Strasse 8; Dieter Schutte, Ernst-Reuter-Strasse 16, all of 7888 Rheinfelden, and Axel Volling, Stettiner Strasse 2, 5040 Bruhl, all of Fed. Rep. of Germany

Continuation of Ser. No. 167,156, Jul. 8, 1980, abandoned. This application Oct. 9, 1981, Ser. No. 310,415

Claims priority, application Fed. Rep. of Germany, Jun. 17, 1979, 2928805

Int. Cl.^{3} B01D *1/02*

U.S. Cl. 422—307 **3 Claims**

1. An apparatus for the vaporization of aluminum trichloride comprising an enclosed curved trough in the shape of an U, having a pair of flat front curved surfaces, means for introducing a meltable mixture containing aluminum chloride into the trough and means for removing vaporized aluminum chloride from the upper portion of the trough,

rotatably disposed at the midpoint of the curve of said front surfaces a shaft aligned parallel to the horizontal longitudinal axis of the trough, said shaft including nitrogen gas sealing means for said shaft to prevent escape of aluminum chloride,

disposed on said shaft a helical stirrer having two equal but oppositely directed pitches,

disposed on the curve of the trough parallel to the horizontal

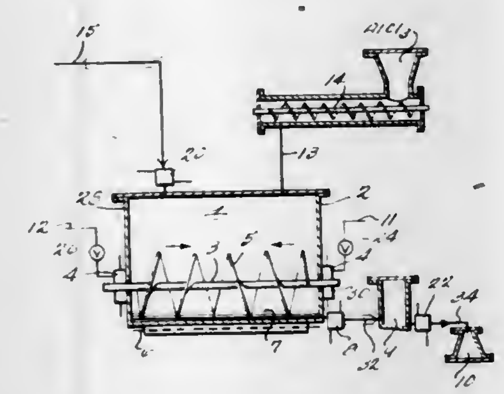

longitudinal axis of the trough outside of the wall thereof at least two heating rods along the entire length of the trough, and

disposed at one end of the trough at the lowest point of said curve a means for the continuous discharge of melted material.

4,371,504

EXTRACTANT AND PROCESS FOR EXTRACTING URANIUM WET-PROCESS PHOSPHORIC ACID

William M. Leaders, Lakeland, Fla., and Charles D. Harrington, Pasco, Wash., assignors to Uranium Recovery Corporation, Mulberry, Fla.

Continuation of Ser. No. 772,818, Feb. 28, 1977, abandoned. This application Oct. 25, 1979, Ser. No. 88,152

Int. Cl.^{3} C01G *43/00*

U.S. Cl. 423—10 **15 Claims**

1. In a process for extracting tetravalent uranium from wet-process phosphoric acid containing ferric iron with an extractant comprising a solution of a mixture of mono- and di-(alkylphenyl) esters of orthophosphoric acid in an inert diluent in which said ferric iron contained in the wet-process phosphoric acid combines with the mixed esters to form a precipitate, the improvement comprising modifying the process by adding to the extractant an essentially water-immiscible phenol in a concentration sufficient to substantially prevent formation of said precipitate.

4,371,505

PROCESS FOR THE RECOVERY OF URANIUM CONTAINED IN AN IMPURE PHOSPHORIC ACID

Jean-Marc Pautrot, Neuilly sur Seine, France, assignor to Rhone-Poulenc Industries, Paris, France

Filed Feb. 28, 1980, Ser. No. 125,575

Claims priority, application France, Feb. 28, 1979, 79/05155

Int. Cl.^{3} C01G *43/00*

U.S. Cl. 423—10 **36 Claims**

1. In a continuous process for the recovery of uranium (VI) contained in an impure phosphoric acid comprising:

(a) a first cycle comprising (i) extracting an impure phosphoric acid with an organic phase which extracts uranium (VI) without extracting substantial amounts of uranium (IV), followed by separating the phases; (ii) extracting the resultant organic phase charged with uranium (VI) with an aqueous solution containing an oxidizing-reducing agent in the reduced state, said oxidizing-reducing agent being a reducing agent for uranium (VI) to uranium (IV) in said aqueous solution and comprising iron (II) ions, said aqueous solution being a solution of phosphoric acid and the phosphoric acid concentration of said aqueous solution being between about 18% and about 70% by weight of P_2O_5, followed by separating the phases; (iii) recycling the resultant organic phase depleted of uranium to the extracting of the impure phosphoric acid; and (iv) treating the resultant aqueous solution charged with uranium (IV), to oxidize the uranium (IV) to uranium (VI) and to convert the oxidizing-reducing agent to its oxidized state; and

(b) a second cycle comprising (i) extracting the oxidized aqueous solution resulting from the first cycle with an organic phase which extracts uranium (VI), followed by separating the phases; (ii) washing the resultant organic phase charged with uranium (VI) with a phosphoric acid solution free of iron, the concentration of the phosphoric acid in the washing solution being close to that of the aqueous extracting solution employed in step (ii) of the first cycle, followed by separating the resultant purified organic phase, treating said purified organic phase with an aqueous solution containing carbonate and ammonium ions to precipitate the uranium in said solution in the form of ammonium uranyl tricarbonate, separating the depleted organic phase from the aqueous suspension and recovering the uranium from said aqueous suspension in the form of ammonium uranyl tricarbonate; and (iii) regenerating

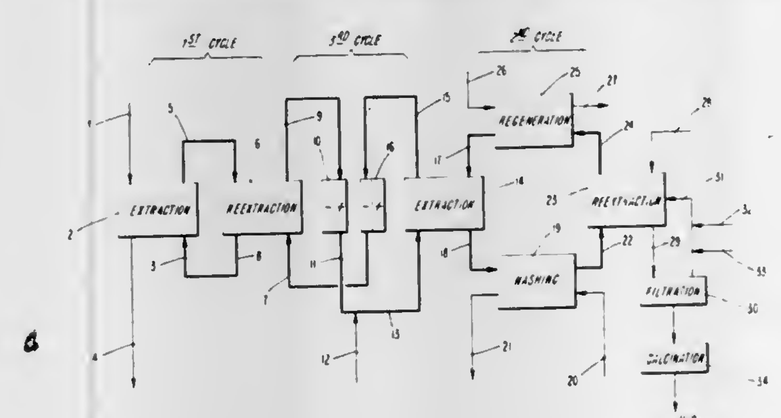

and then recycling the resultant organic phase depleted of uranium to the second cycle extracting step; the improvement comprising:

(i) carrying out step (iv) of the first cycle by treating the aqueous solution charged with uranium (IV) resulting from the extracting step (ii) of the first cycle in its entirety in the anodic compartment of an electrolytic cell under direct current voltage;

(ii) carrying out step (i) of the second cycle by treating the oxidized aqueous phase issuing from and anodic compartment with the organic extracting phase of the second cycle;

(iii) treating the resultant aqueous phase depleted of uranium in its entirety in the cathodic compartment of said electrolytic separation cell under direct current voltage, to afford an aqueous phase containing the oxidizing-reducing agent in the reduced state; and

(iv) recycling the resultant aqueous phase to the back extracting step of the first cycle;

whereby the aqueous solution is circulated in a closed loop between the first and second cycles, in the form of a third cycle.

4,371,506

AMMONIACAL ELUTION OF COPPER FROM ION EXCHANGE RESINS

Eduard Byleveld, Richmond Hill, Canada, assignor to Himsley Engineering Limited, Toronto, Canada

Filed Jun. 18, 1981, Ser. No. 274,865

Int. Cl.^{3} C01G *3/14*

U.S. Cl. 423—24 **24 Claims**

1. Method for the successive elution of cupric ion-loaded beds of chelating anion exchange resin, to recover an eluate of relatively high copper concentration, said resin being characterised by having pendent aminopyridine groups, comprising subjecting each bed to an elution cycle comprising

(a) contacting the bed with a tertiary ammoniacal solution of relatively low copper concentration obtained as effluent solution from step (f) of the preceding elution cycle;

(b) withdrawing a first effluent solution from the bed;

(c) removing said first effluent solution from the system;

(d) contacting the bed with a secondary ammoniacal eluant solution of intermediate copper concentration obtained as effluent from step (k) of the preceding elution cycle;

(e) withdrawing from the bed first and second fractions of a second effluent solution, said fractions having relatively low and relatively high copper concentrations, respectively;

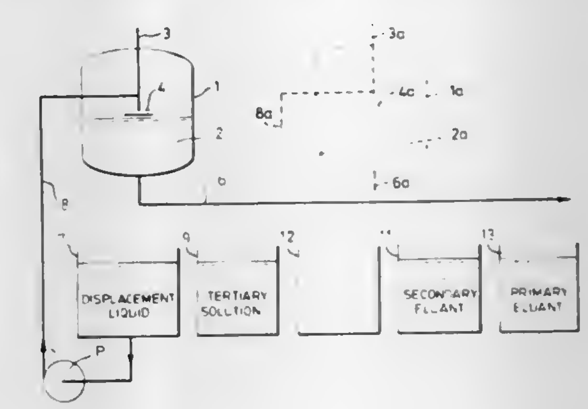

(f) collecting the first fraction of said effluent solution for use as tertiary solution in step (a) of the next elution cycle;

(g) recovering said second fraction;

(h) contacting the bed with a primary ammoniacal eluant solution substantially free of copper ions;

(i) withdrawing from the bed first and second fractions of effluent solution having relatively high and intermediate copper concentrations, respectively;

(j) recovering said first fraction;

(k) collecting said second fraction for use as secondary eluant in step (d) of the next elution cycle;

(l) providing a bed of cupric ion-loaded chelating anion exchange resin; and

(m) re-commencing said elution cycle by repeating steps (a) to (l).

4,371,507

CATALYTIC HYDROGENATION OF OLEFINS, HYDRODESULFURIZATION OF ORGANIC SULFUR COMPOUNDS AND/OR SELECTIVE REMOVAL OF HYDROGEN SULFIDE FROM FLUID STREAMS

Floyd E. Farha, Jr., and Lloyd E. Gardner, both of Bartlesville, Okla., assignors to Phillips Petroleum Company, Bartlesville, Okla.

Division of Ser. No. 190,004, Sep. 23, 1980, Pat. No. 4,313,820, which is a continuation-in-part of Ser. No. 125,438, Feb. 28, 1980, abandoned. This application Dec. 2, 1981, Ser. No. 326,964

Int. Cl.^{3} B01D *53/34*

U.S. Cl. 423—230 **36 Claims**

1. A process for removing hydrogen sulfide from a fluid stream comprising the step of contacting said fluid stream under suitable absorbing conditions with an incompletely sulfided absorbing composition comprising zinc titanate and at least one promoter selected from the group consisting of vanadium, chromium, manganese, iron, cobalt, nickel, molybdenum, rhenium, and compounds thereof, wherein the concentration by weight of said at least one promoter in said absorbing composition is less than the total concentration by weight of said zinc titanate in said absorbing composition.

4,371,508

METHOD FOR OPERATING A FLUE GAS DESULFURIZATION

Klaus Weinzierl, and Robert Karger, both of Dortmund, Fed. Rep. of Germany, assignors to L. & C. Steinmüller GmbH, Gummersbach, Fed. Rep. of Germany

Filed Oct. 27, 1980, Ser. No. 200,973

Claims priority, application Fed. Rep. of Germany, Oct. 27, 1979, 2943468

Int. Cl.³ C04B *17/00*

U.S. Cl. 423—242 **3 Claims**

1. A method of operating with the suspension existing after a flue gas desulfurization in connection with a steam power plant fired with fossil fuels, said method including the steps of:
removing the sulfur dioxide contained in said flue gas by means of an excess of one of the group consisting of milk of lime and limestone to produce calcium sulfite and to leave non-converted excess in the suspension;
oxidizing said produced calcium sulfite with air at a low pH-value to calcium sulfate; and;
at least partially neutralizing said non-converted excess by addition of at least one of the group consisting of the acid waste water from a complete desalination plant for feed water, and the acid condensate from the flue of said steam power plant.

4,371,509

OXIDIZING PHOSPHORUS COMPOUNDS WITH CHLOROSULFONIC ACID

Jürgen Grosse, Hürth, Fed. Rep. of Germany, assignor to Hoechst Aktiengesellschaft, Fed. Rep. of Germany

Filed Sep. 8, 1981, Ser. No. 299,678

Claims priority, application Fed. Rep. of Germany, Sep. 10, 1980, 3033957

Int. Cl.³ C07F *9/09, 9/42, 9/28;* **C01B** *25/10*

U.S. Cl. 423—300 **3 Claims**

1. A process for oxidizing phosphorus compounds of the general formula (I)

$$R_{3-n}PX_n \qquad (I)$$

in which R stands either for rectilinear and/or branched alkyl-, cycloalkyl-, aryl-, alkylaryl- as well as aralkyl groups having from 1 to 18 carbon atoms, or for a group —OR' or —SR', in which R' stands for an aryl radical or alkyl radical having from 1 to 8 carbon atoms, or two R groups together stands for a group

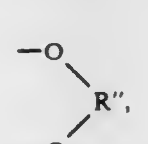

in which R" stands for an alkylene radical having from 2 to 8 carbon atoms, X stands for halogen, and n stands for 0, 1, 2 or 3, so as to obtain compounds of the following general formula (II)

$$R_{3-n}P(O)X_n \qquad (II)$$

in which R, X and n have the meanings given above, which comprises using chlorosulfonic acid as an oxidant and effecting the oxidation in homogeneous liquid phase.

4,371,510

PROCESS FOR THE CONTINUOUS CRYSTALLIZATION OF ZEOLITIC SODIUM ALUMINOSILICATES OF SMALLEST PARTICLE SIZE

Peter Christophliemk, Düsseldorf; Willi Wüst, Ratingen-Hösel, and Franz-Josef Carduck, Haan, all of Fed. Rep. of Germany, assignors to Henkel Kommanditgesellschaft Auf Aktien, Dusseldorf-Holthausen and Degussa Aktiengesellschaft (Henkel KGaA), Frankfurt, both of, Fed. Rep. of Germany

Filed Sep. 30, 1980, Ser. No. 192,483

Claims priority, application Fed. Rep. of Germany, Oct. 13, 1979, 2941636

Int. Cl.³ C01B *33/28*

U.S. Cl. 423—329 **9 Claims**

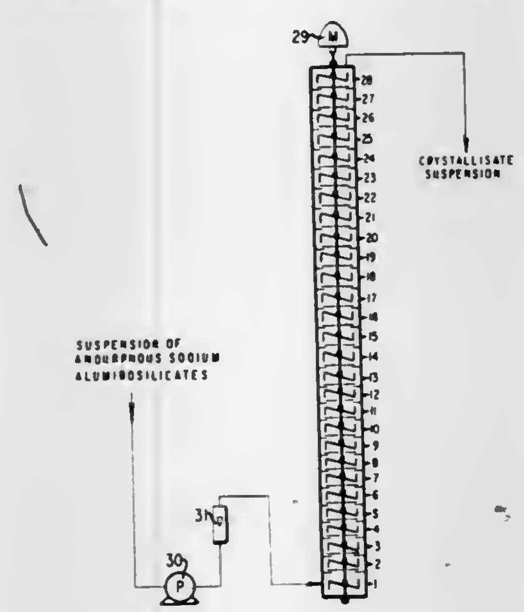

1. In a process for the production of an aqueous suspension of low-grit, crystallized zeolitic sodium aluminosilicate of the smallest particle size having the composition

$$0.9 \text{ to } 1.1\ Na_2O\ .\ 1\ Al_2O_3\ .\ 1.8 \text{ to } 2.5\ SiO_2$$

with a water content depending on the degree of drying, which contains at least 99.8% by weight of a particle size of less than 25 μm and has a high cation exchange capability, comprising crystallization of an aqueous alkaline suspension of an x-ray-amorphous sodium aluminosilicate, said suspension having a composition corresponding to the molar ratios of

$$1.5 \text{ to } 5\ Na_2O{:}\ 1\ Al_2O_3{:}\ 1 \text{ to } 4\ SiO_2{:}\ 40 \text{ to } 400\ H_2O$$

at elevated temperatures and recovering crystallized zeolitic sodium aluminosilicate, the improvement consisting of feeding the suspension of the x-ray-amorphous sodium aluminosilicate continuously into a crystallizing reactor having progressively, separately zoned mixing areas with a stage-like effect and having at least 20 stages, wherein the suspension flows first through at least 8 stages in the intake part of the reactor, which intake part of the reactor may comprise up to one third of the total reactor volume, maintaining said suspension in the reactor at a preselected temperature in the range of from 80° C. to 100° C. until the degree of crystallization of the zeolitic sodium aluminosilicate, determined by x-ray, has reached at least 80% of the theoretically possible crystallinity, and continuously removing the suspension from the end opposite of the intake end of the reactor where said suspension of the x-ray-amorphous sodium aluminosilicate is continuously fed into said crystallizing reactor and continuously removed at a throughput in the range of from 1 to 4 cubic meters of suspension per cubic meter of reactor volume and per hour, and said suspension of the x-ray-amorphous sodium aluminosilicate is below said preselected crystallization temperature and is heated by steam injection to said preselected crystallization temperature before it leaves said intake part of the reactor.

4,371,511

DECREASING CARBON BLACK REACTOR FOULING RATE

Paul J. Cheng, Bartlesville, Okla., assignor to Phillips Petroleum Company, Bartlesville, Okla.

Filed Jul. 9, 1981, Ser. No. 281,754

Int. Cl.³ C01B *31/02;* **C09C** *1/48*

U.S. Cl. 423—456 **8 Claims**

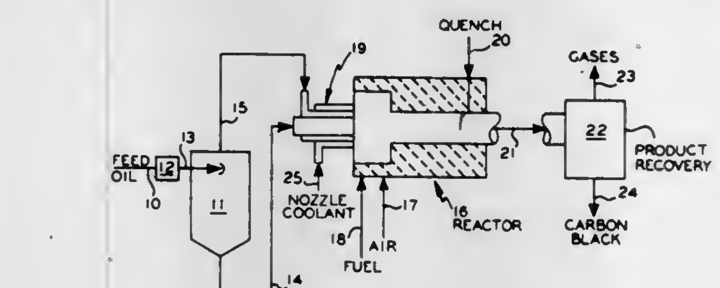

1. A process for producing carbon black wherein in a reactor a carbon black forming feed is heated by hot combustion gases to form carbon black,
said process comprising:
(a) feeding a contaminant enriched carbon black forming feed stream into said reactor,
(b) feeding a substantially contaminant free carbon black forming feed stream into said reactor coaxially to and surrounding said contaminant enriched carbon black forming feed stream,
(c) heating the contaminant enriched stream and substantially contaminant free carbon black forming feed stream with hot combustion gases to subject these streams to carbon black forming temperatures thereby producing carbon black, and
(d) recovering the carbon black produced.

4,371,512

PRODUCTION OF ALKALI METAL SULFATES

John B. Sardisco, Shreveport, La., and Erhart K. Drechsel, Montgomery, Tex., assignors to Pennzoil Company, Houston, Tex.

Filed Feb. 3, 1981, Ser. No. 231,361

Int. Cl.³ C01D *15/06;* **C22B** *26/10;* **C01B** *17/74*

U.S. Cl. 423—551 **12 Claims**

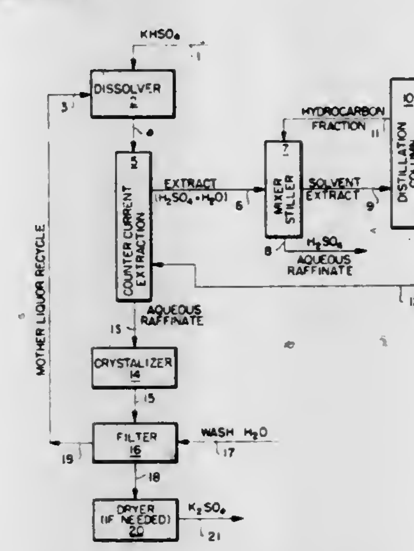

1. A process for the production of an alkali metal sulfate from an alkali metal hydrogen sulfate which comprises the steps of:
(a) forming an aqueous solution of an alkali metal hydrogen sulfate;
(b) contacting said aqueous solution of alkali metal hydrogen sulfate with a hydrophilic solvent which is selected from the group consisting of n-butyl alcohol, isobutyl alcohol, n-pentyl alcohol, isopentyl alcohol, n-hexyl alcohol, n-heptyl alcohol, n-octyl alcohol, n-nonyl alcohol, and mixtures thereof, said solvent being effective to extract at least a portion of the sulfuric acid formed as the alkali metal hydrogen sulfate is converted to alkali metal sulfate; said extraction providing a mixture comprising alkali metal sulfate, hydrophilic solvent, sulfuric acid, and water;
(c) separating the hydrophilic solvent phase from the said mixture to form a residual mixture, and separating the sulfuric acid from the hydrophilic solvent by extraction of the hydrophilic solvent with a hydrophobic solvent;
(d) passing the residual mixture to a crystallizer to precipitate the alkali metal sulfate solid; and
(e) recovering the solid alkali metal sulfate product.

4,371,513

ALUMINA COMPOSITIONS

Moises G. Sanchez, Severna Park, and Norman R. Laine, Rockville, both of Md., assignors to W. R. Grace & Co., New York, N.Y.

Continuation of Ser. No. 20,114, Mar. 13, 1979, abandoned, which is a continuation of Ser. No. 781,393, Mar. 25, 1977, Pat. No. 4,154,812. This application Feb. 19, 1981, Ser. No. 235,876

The portion of the term of this patent subsequent to May 15, 1996, has been disclaimed.

Int. Cl.³ C01F *7/02*

U.S. Cl. 423—625 **11 Claims**

1. An alumina composition comprising a microcrystalline boehmite-pseudoboehmite intermediate, said composition having a calcium content expressed as CaO that does not exceed 0.15 weight percent, a [020] d spacing of from about 6.2 to about 6.5 A., and a nitrogen pore volume of about 0.60 to about 0.75 cm.³/g., said pore volume determined after a thermal treatment for about 1 hour at about 1850° F., and requiring from about 130 to about 180 milliequivalents of sulfuric acid per mole of alumina to change the pH of a water slurry of the composition from about 8.3 to about 4.0.

11. An alumina composition comprising a substantially pure, microcrystalline boehmite-pseudoboehmite intermediate, said composition having a [020] d spacing of about 6.3 to about 6.4 A, a nitrogen pore volume of about 0.64 to about 0.72 cm.³/g., and a surface area of about 110 to about 140 m.²/g., said pore volume and surface area determined after a thermal treatment for about 1 hour at about 1850° F.

4,371,514

RADIOIMMUNOASSAY OF PTERINS AND NOVEL PTERIN DERIVATIVES USEFUL THEREFOR

Toshiharu Nagatsu; Takeshi Kato, both of Yokohama; Tokio Yamaguchi, Hachioji; Miki Akino, Musashino; Sadao Matsuura, Nagoya, and Takashi Sugimoto, Chiryu, all of Japan, assignors to Daiichi Radioisotope Laboratories, Ltd., Tokyo, Japan

Filed Jul. 7, 1980, Ser. No. 166,519

Claims priority, application Japan, Jul. 4, 1979, 54/84568; Jan. 11, 1980, 55/18841

Int. Cl.³ G01N *33/56, 33/58;* **C07D** *475/00*

U.S. Cl. 424—1 **16 Claims**

10. A method of radioimmunoassay for determining pterines, comprising mixing an unknown sample or a known amount of a standard with a labeled compound of the formula

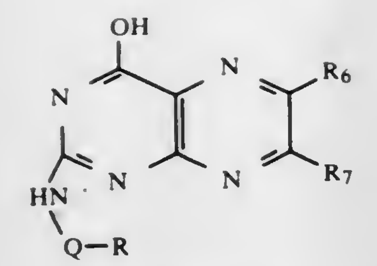

wherein R represents a radioiodinated hydroxyphenyl group or a radioiodinated tyraminocarbonyl group; Q represents a straight or branched chain alkylene group having from 1 to 6 carbon atoms; and R_6 and R_7 each represents hydrogen, an alkyl group having from 1 to 6 carbon atoms, or a hydroxyalkyl group having from 1 to 6 carbon atoms, and anti-pterines antibody, separating bound labeled compound from remaining free labeled compound, and counting the radiation emitted from either the bound labeled compound or the free labeled compound in a gamma counter.

4,371,515

METHOD FOR FORMING AN ISOLATED LECTIN-IMMUNOLOGICAL CONJUGATE

Albert E. Chu, San Mateo, Calif., assignor to E-Y Laboratories, Inc., San Mateo, Calif.

Filed Dec. 26, 1978, Ser. No. 972,921

Int. Cl.³ G01N *33/50;* **C07H** *1/00;* **C12P** *1/00, 21/00;* **C12Q** *1/00*

U.S. Cl. 436—544 **17 Claims**

1. A method for forming an isolated reaction product of a lectin covalently bonded to a reactive component capable of forming an immunological conjugate pair comprising the steps of

(a) covalently reacting said lectin and reactive component to form a bound lectin-reactive component mixed with non-reacted free reactive component and free lectin in a fluid reaction mixture,

(b) immunologically reacting the free and bound reactive component in said reaction mixture with its corresponding conjugate pair component in insolubilized form,

(c) separating said insolubilized immunological reaction product formed in step (b) from the remainder of said fluid reaction mixture containing free lectin,

(d) breaking the immunological bonds in said immunological reaction product to form a solution containing soluble free and bound reactive component,

(e) separating the soluble and insoluble portions of step (d),

(f) contacting the separated soluble portion of step (e) with insolubilized sugar moieties selectively and reversibly reactive with said lectin to permit the sugar and lectin of the bound lectin-reactive component to react, and

(g) separating the insolubilized sugar-lectin-reactive component product from the remainder of the solution containing free soluble reactive component.

4,371,516

ARTICLES FOR CARRYING CHEMICALS

George K. E. Gregory, Marlow; James M. Peach, High Wycombe, and James D. Du Mayne, Maidenhead, all of England, assignors to John Wyeth & Brother Limited, Maidenhead, England

Continuation of Ser. No. 837,345, Sep. 28, 1977, abandoned. This application Jul. 17, 1981, Ser. No. 284,025

Claims priority, application United Kingdom, Oct. 6, 1976, 41483/77

Int. Cl.³ A61K *9/26*

U.S. Cl. 424—22 **5 Claims**

1. A pharmaceutical dosage form for oral administration as a solid, which dosage form can be disintegrated by water within ten seconds and which consists essentially of an open matrix network carrying a unit dosage of a pharmaceutical substance, the open matrix network consisting essentially of a pharmacologically acceptable water-soluble or water-dispersible carrier material, selected from the group consisting of partially hydrolysed gelatin, hydrolysed dextran, alginate, and a mixture of at least one of the above carrier materials with polyvinyl alcohol, polyvinylpyrrolidine or acacia.

4,371,517

COMPOSITION FOR TREATING FIBROUS MATERIALS, BASED ON CATIONIC AND ANIONIC POLYMERS

Guy Vanlerberghe, Villevaude; Henri Sebag; Alexandre Zysman, both of Paris, and Claude Dubief, Guyancourt, all of France, assignors to L'Oreal, Paris, France

Filed Sep. 12, 1979, Ser. No. 75,197

Claims priority, application France, Sep. 13, 1978, 78 26343

Int. Cl.³ A61K *7/06;* **D06M** *9/00*

U.S. Cl. 424—70 **15 Claims**

1. A composition suitable for the treatment of fibrous materials which is in the form of an aqueous composition containing at least one cationic polymer which is a polyamine or quaternary polyammonium polymer in which the amine or ammonium group forms part of the polymer chain or is joined to the latter, at least one anionic polymer containing carboxylic groups, at least one alkali metal salt and at least one surface-active agent, the only surface-active agents in the composition being surface-active agents which are either non-ionic or contain one or more carboxyl or carboxylate groups in addition to one or more non-ionic groups, the cationic polymer and the anionic polymer each being present in an amount from about 0.25 to 3% by weight, the at least one surface-active agent being present in an amount from about 1 to 50% by weight, and the alkali metal salt being a halide, sulfate, acetate or lactate.

13. Process for treating fibrous material which comprises applying thereto a composition as defined in claim 1.

15. Process according to claim 13 for treating human hair in which the composition is in the form of a shampoo, a colouring product, a rinsing lotion intended to be applied before or after shampooing, before or after colouring or bleaching or before or after permanent waving, a brushing lotion or a restructuring lotion.

4,371,518

CARRIERS FOR SPERMICIDAL SUBSTANCES

Giovanni Gazzani, Appiano Gentile, Italy, assignor to Crinos Industria Farmabiologica S.p.A., Villa Guardia, Italy

Filed May 26, 1981, Ser. No. 267,393

Claims priority, application Italy, Jun. 20, 1980, 22910 A/80

Int. Cl.³ A61K *31/09, 31/74, 47/00*

U.S. Cl. 424—78 **5 Claims**

1. A spermicidal composition for topical use containing an active amount of a known spermicidal agent dispersed in a suitable vehicle, wherein said vehicle consists of a water insoluble hydrophilic crosslinked dextran in an amount sufficient to have an absorptive capacity greater than the amount of sperm which can be ejaculated in a single ejaculation.

4,371,519

METHODS OF TREATING CELLULAR TISSUE

William P. Hettinger, Jr., 10 Wispering Pines Rd., Sudbury, Mass. 01776

Continuation of Ser. No. 259,556, Jun. 5, 1972, Pat. No. 3,975,516, which is a continuation-in-part of Ser. No. 881,616, Dec. 2, 1969, abandoned. This application May 4, 1976, Ser. No. 683,079

The portion of the term of this patent subsequent to Aug. 17, 1993, has been disclaimed.

Int. Cl.³ A61K *31/78*

U.S. Cl. 424—81 **1 Claim**

1. A process for encasement and infiltration of animal cellular tissue within the animal body to reduce the influx of oxygen and liquids thereto, to reduce the efflux of liquids therefrom, and to retain in situ and retard efflux of therapeutic agents from the cellular tissue and to block capillary and extra cellular plasma flow, comprising the steps of injecting into the body of said animal tissue an effective amount of a fluid polymerizable gel forming material substantially insoluble in said tissue and the body fluids associated therewith to effect encasement and infiltration of said tissue by said gel and polymerizing said gel to cause gelation in situ within said tissue in which the gel forming polymerizable material consists of a member selected from the group consisting of acrylamide and N,N¹-methylenebisacrylamide.

4,371,520

PROCESS FOR PREPARING IMMUNOGLOBULIN SUITABLE FOR INTRAVENOUS INJECTION

Yahiro Uemura; Takashi Goto, both of Hirakata; Yoshiaki Kano, Osaka, and Satoshi Funakoshi, Katano, all of Japan, assignors to The Green Cross Corporation, Osaka, Japan

Filed Oct. 28, 1981, Ser. No. 316,042

Int. Cl.³ A61K *39/00*

U.S. Cl. 424—85 **8 Claims**

1. A process for preparing an immunoglobulin suitable for intravenous injection, which consists essentially of treating a plasma or the Cohn's fraction I+II+III, fraction II+III, fraction II, or fraction III obtained by subjecting a plasma to Cohn's cold alcohol fractionation with an acid at pH 3.2 to 5.0 and at 4° to 15° C. for 30 to 180 minutes, adding to the resulting material at pH 4.6 to 5.4 an alkylene oxide polymer or copolymer having a molecular weight of 2,000 to 20,000 to a concentration of 4.5 to 5.5% (W/V), removing an aggregate-type immunoglobulin as a precipitate, and adding again said polymer or copolymer at pH 8.0 to 9.0 to a concentration of 6 to 13% (W/V) to recover as a precipitate a non-aggregate-type immunoglobulin containing substantially no aggregate-type immunoglobulin.

4,371,521

PHARMACEUTICAL COMPOSITION FOR RETARDING EXCESSIVE PLATELET AGGREGATION

Victor Izrael, 22 rue des Francs Bourgeois, Paris, France

Filed Jun. 11, 1974, Ser. No. 478,367

Claims priority, application France, Jun. 27, 1973, 73 23441

Int. Cl.³ A61K *31/66, 37/48*

U.S. Cl. 424—94 **3 Claims**

1. A liquid solution capable of being directly injected into the bloodstream in dosage unit form which comprises creatine-phosphate and creatine-phosphokinase and a pharmaceutically acceptable solvent, there being present in said liquid solution from 30 to 3000 parts by weight of creatine-phosphate per single part by weight of creatine-phosphokinase.

4,371,522

KERATOCONJUNCTIVITIS SICCA THERAPY

Jeffrey P. Gilbard, 20 Mt. Vernon St., Boston, Mass. 02108

Continuation-in-part of Ser. No. 27,294, Apr. 25, 1979, abandoned. This application Nov. 24, 1980, Ser. No. 209,832

Int. Cl.³ A61K *33/14*

U.S. Cl. 424—153 **7 Claims**

1. A method of relieving discomfort in eyes of patients afflicted with keratoconjunctivitis sicca which comprises adjusting the tonicity of the eyes by contacting the eyes of said patients with an ophthalmically acceptable hypotonic solution of a concentration of between 75 to 225 mOsm/l.

4,371,523

REDUCING THE AGGREGATION OF INSULIN IN SOLUTION

Gerold M. Grodsky, San Francisco, Calif., and Jacques Bringer, Montpellier, France, assignors to The Regents of the University of California, Berkeley, Calif.

Filed Dec. 29, 1980, Ser. No. 220,779

Int. Cl.³ A61K *37/26*

U.S. Cl. 424—178 **12 Claims**

1. A method of reducing the aggregation of insulin in a solution which is retained over extended periods of time in a reservoir under agitation and at about body temperature comprising admixing into said insulin solution an effective amount of an anti-aggregation agent having two carboxyl moieties and at least one amino or amino derivative moiety, and adjusting the pH of said insulin solution to a pH at about the isoelectric point of the anti-aggregation agent.

4,371,524

ANTICOMPLEMENTARY AGENTS COMPRISING SOYASAPOGENOL B COMPOUNDS

Masanao Shinohara, Naruto; Yoshimasa Nakano, Tokushima; Hirotsugu Kaise, Tokushima; Taketoshi Izawa, Tokushima, and Wasei Miyazaki, Tokushima, all of Japan, assignors to Otsuka Pharmaceutical Co., Ltd., Tokyo, Japan

Continuation of Ser. No. 25,517, Mar. 30, 1979, abandoned. This application Mar. 6, 1981, Ser. No. 241,294

Claims priority, application Japan, Mar. 31, 1978, 53-38536; May 17, 1978, 53-59345

The portion of the term of this patent subsequent to Aug. 12, 1997, has been disclaimed.

Int. Cl.³ A61K *31/70*

U.S. Cl. 424—180 **7 Claims**

1. A method for treating nephritis, which comprises administering an antinephritic pharmaceutical composition comprising (a) an antinephritic therapeutically effective amount of at least one soyasapogenol B compound represented by the general formula (I):

(I)

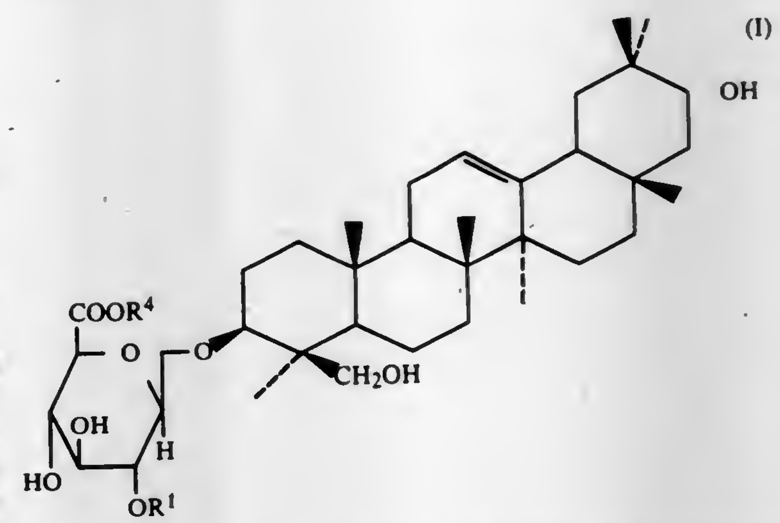

wherein R^1 represents a hydrogen atom or a group represented by the formula:

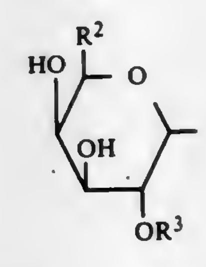

wherein R^2 represents a hydrogen atom or a hydroxymethyl group, R^3 represents a hydrogen atom or a rhamnopyranosyl group, and R^4 represents a hydrogen atom or an alkyl group having 1 to 6 carbon atom, with the proviso that R^1 and R^4 are not simultaneously hydrogen atoms,

or pharmaceutically acceptable salts thereof and a pharmaceutically acceptable carrier,
to a nephritic patient in a daily dose of about 0.5 to about 20 mg/kg of body weight per day.

2. A method for inhibiting the complement system in a body fluid which comprises subjecting said fluid to the action of an effective complement inhibiting amount of a compound represented by the general formula (I):

(I)

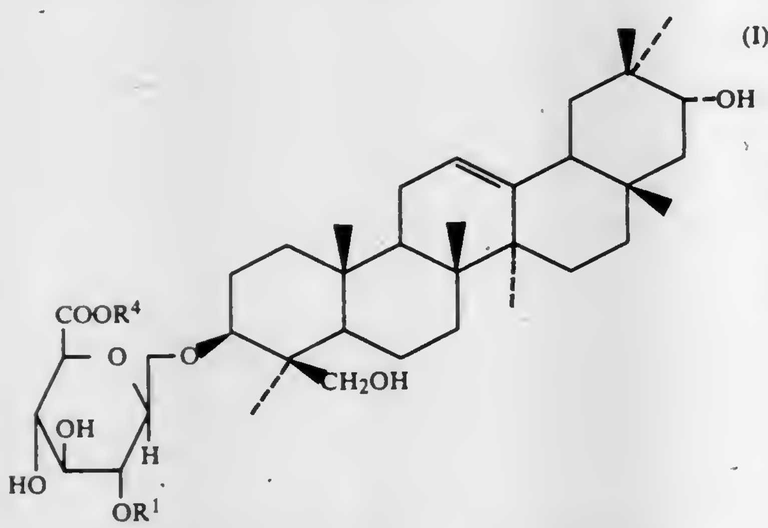

wherein R^1 represents a hydrogen atom or a group represented by the formula:

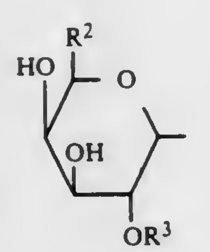

wherein R^2 represents a hydrogen atom or a hydroxymethyl group, R^3 represents a hydrogen or a rhamnopyranosyl group, and R^4 represents a hydrogen atom or an alkyl group having 1 to 6 carbon atoms,
or pharmaceutically acceptable salts thereof.

4,371,525

SILYL-BENZIMIDAZOLE-2-CARBAMIC ACID ESTERS AND THEIR USE AS FUNGICIDES

Rolf-Dieter Acker, Leimen; Karl-Heinz Koenig, Frankenthal; Gerhard Hamprecht, Weinheim, and Ernst-Heinrich Pommer, Limburgerhof, all of Fed. Rep. of Germany, assignors to BASF Aktiengesellschaft, Fed. Rep. of Germany

Filed Nov. 18, 1980, Ser. No. 208,034

Claims priority, application Fed. Rep. of Germany, Dec. 4, 1979, 2948672

Int. Cl.^{3} A01N *55/00;* C07F *7/10*

U.S. Cl. 424—184 **10 Claims**

1. A silyl-benzimidazole-2-carbamic acid ester of the formula

(I)

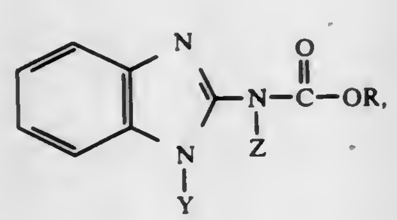

where Y and Z are hydrogen or a silyl radical of the formula

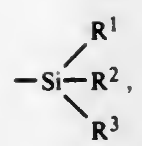

where R^1, R^2 and R^3 independently of one another are unsubstituted or halogen-substituted alkyl, alkenyl or alkynyl of up to 12 carbon atoms, cycloalkyl of up to 7 carbon atoms which is unsubstituted or substituted by alkyl or alkynyl of up to 4 carbon atoms, or phenyl which is unsubstituted or substituted by halogen or alkyl of up to 4 carbon atoms, and R is alkyl of up to 4 carbon atoms, with the proviso that Y and Z are not both hydrogen.

10. A method of combating fungi which comprises applying to the fungi or to areas, plants or seed threatened by fungus attack a fungicidally effective amount of a silyl-benzimidazole-2-carbamic acid ester of the formula

(I)

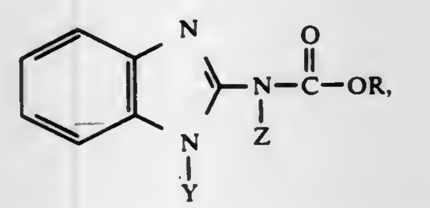

where Y and Z are hydrogen or a silyl radical of the formula

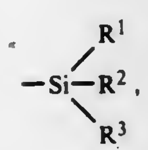

where R^1, R^2 and R^3 independently of one another are unsubstituted or halogen-substituted alkyl, alkenyl or alkynyl of up to 12 carbon atoms, cycloalkyl of up to 7 carbon atoms which is unsubstituted or substituted by alkyl or alkynyl of up to 4 carbon atoms, or phenyl which is unsubstituted or substituted by halogen or alkyl of up to 4 carbon atoms, and R is alkyl of up to 4 carbon atoms, with the proviso that Y and Z are not both hydrogen.

4,371,526

PHOSPHINYLALKANOYL SUBSTITUTED 4,5-DIHYDROPYRAZOLE-5-CARBOXYLIC ACID DERIVATIVES AND HYPOTENSIVE METHOD AND COMPOSITION

George C. Rovnyak, Hopewell, N.J., assignor to E. R. Squibb & Sons, Inc., Princeton, N.J.

Filed Aug. 21, 1981, Ser. No. 294,944

Int. Cl.^{3} A61K *31/675, 31/685;* C07F *9/58, 9/65*

U.S. Cl. 424—200 **12 Claims**

1. A compound of the formula:

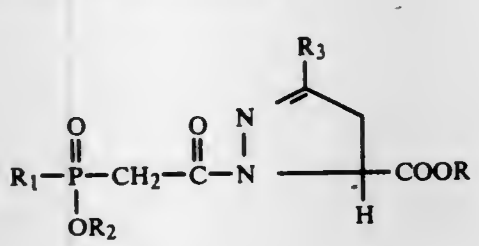

or a basic, physiologically acceptable salt thereof wherein R and R_2 are independently selected from the group consisting of hydrogen, lower alkyl of 1 to 4 carbons, benzyl, and

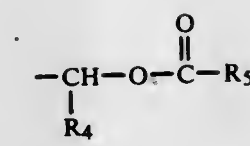

R_3 is hydrogen, alkyl,

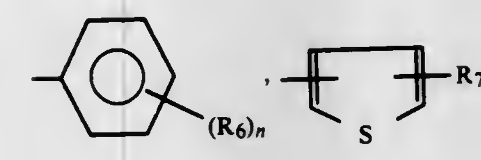

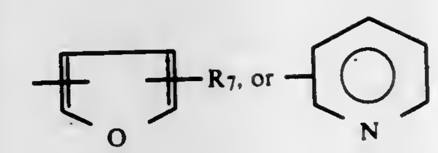

R_1 is alkyl or

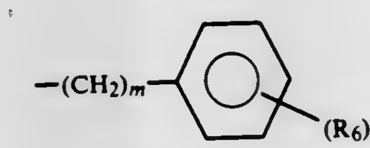

R_4 is hydrogen, lower alkyl of 1 to 4 carbons, phenyl, or

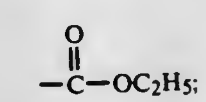

R_5 is hydrogen, lower alkyl of 1 to 4 carbons, lower alkoxy of 1 to 4 carbons, phenyl, or R_4 and R_5 taken together are —$(CH_2)_2$—, —$(CH_2)_3$—, —CH═CH—, or

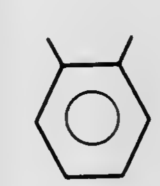

R_6 is hydrogen, lower alkyl of 1 to 4 carbons, lower alkoxy of 1 to 4 carbons, lower alkylthio of 1 to 4 carbons, chloro, bromo, fluoro, trifluoromethyl, or hydroxy;
n is one, two or three provided that n is two or three only if R_6 is hydrogen, methyl, methoxy, chloro, or fluoro;
R_7 is hydrogen, lower alkyl of 1 to 4 carbons, chloro, bromo, or fluoro; and
m is zero or an integer from 1 to 8.

4,371,527

THERAPEUTIC PROCESS WITH DIPHOSPHONATE COMPOUNDS

Craig L. Bentzen, Onex; Lan Nguyen Mong, Nyon, and Eric Niesor, Gland, all of Switzerland, assignors to Symphar S.A., Geneva, Switzerland

Division of Ser. No. 114,423, Jan. 22, 1980, Pat. No. 4,309,364. This application Nov. 18, 1980, Ser. No. 208,008

Claims priority, application United Kingdom, Feb. 13, 1979, 7904992; Sep. 25, 1979, 7933157

Int. Cl.^{3} A61K *31/66*

U.S. Cl. 424—204 **14 Claims**

1. A method of increasing the quantity of circulating high density lipoproteins and clearing cholesterol from various tissues, in humans, comprising administering to a human an amount effective to increase the quantity of circulating high density lipoproteins and to clear cholesterol from various tissues, of a diphosphonate compound of

(I)

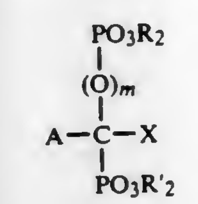

where X is H, OH,

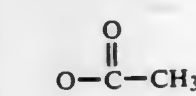

or NH_2; R and R′ identical or different are H, CH_3 or C_2H_5; m is zero or 1; and A is selected from the group consisting of

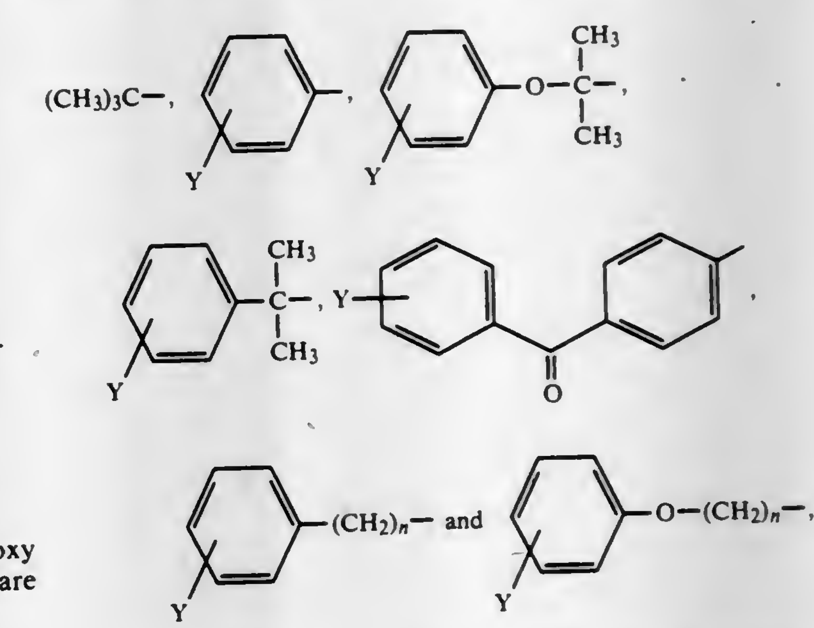

where n is an integer from 1 to 6 and Y is H, CH_3, OCH_3 or Cl.

4,371,528

CONTROLLING MICRO-ORGANISMS

Erwin H. Mosbach, 300 Central Park West, New York, N.Y. 10024; Charles K. McSherry, 10 Nathan D.Perlman Pl., New York, N.Y. 10003, and Phillip B. Hylemon, MCV Station, Richmond, Va. 23298

Filed Mar. 22, 1982, Ser. No. 360,708

Int. Cl.^{3} A61K *31/58*

U.S. Cl. 424—241 **4 Claims**

1. The method of controlling microorganisms, which comprises subjecting said microorganisms to the action of a small but effective amount of a compound of the formula,

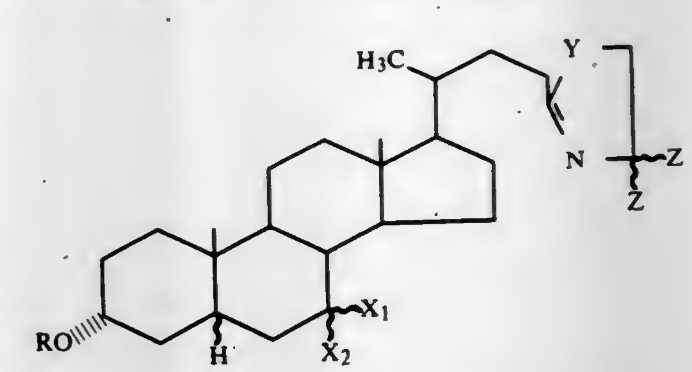

wherein R is H or acyl; Y is N, O or S; each Z is H, lower alkyl, OH, aryl, arakyl, substituted-lower alkyl cycloalkyl or substituted acyl; X_1 is H, OH, acyloxy, alkyl or aryl; X_2 is H, OH, acyloxy, alkyl, aryl, alkoxy, aryloxy, or aralkyl; X_1 and X_2

when taken together is oxo (O=); and the non-toxic, pharmaceutically acceptable salts thereof.

4,371,529

11-METHYLENE-Δ^{15}-STEROIDS, THEIR PREPARATION AND USE IN PHARMACEUTICALS

Helmut Hofmeister; Karl Petzoldt; Klaus Annen; Henry Laurent; Rudolf Wiechert, and Hermann Steinbeck, all of Berlin, Fed. Rep. of Germany, assignors to Schering, Aktiengesellschaft, Berlin and Bergkamen, Fed. Rep. of Germany

Filed Nov. 6, 1981, Ser. No. 318,906

Claims priority, application Fed. Rep. of Germany, Nov. 7, 1980, 3042529

Int. Cl.^{3} A61K *31/56*

U.S. Cl. 424—243 **14 Claims**

1. An 11-Methylene-Δ^{15}-steroid of the formula

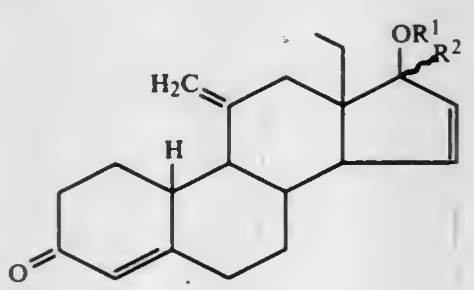

wherein

R^1 is hydrogen or an acyl group of a C_{1-15} hydrocarbon carboxylic acid, and

R^2 is ethynyl, chloroethynyl or propynyl.

13. A method of achieving a progestational effect in a patient in need of such treatment comprising administering to the patient a progestationally effective amount of a compound of claim 1.

4,371,530

AMINOCYCLOPENTANONE AMIDES AND PHARMACEUTICAL FORMULATION

Eric W. Collington, Welwyn; Peter Hallet, Buntingford; Christopher J. Wallis, Royston, and Norman F. Hayes, Hitchin, all of England, assignors to Glaxo Group Limited, London, England

Filed Jul. 2, 1981, Ser. No. 279,825

Claims priority, application United Kingdom, Jul. 4, 1980, 8022048

Int. Cl.^{3} A61K *31/535, 31/55;* **C07D** *295/14*

U.S. Cl. 424—244 **9 Claims**

1. Compounds of the general formula (1)

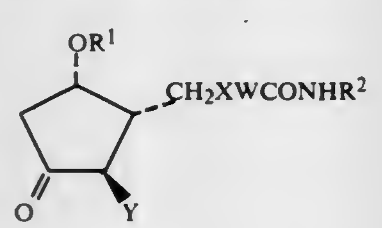

(1)

wherein

R^1 is (i) straight or branched C_{1-5} alkyl substituted by (a) phenyl optionally substituted by C_{1-6} alkyl, C_{5-7} cycloalkyl, phenylalkyl having a C_{1-3} alkyl portion, thienyl or phenyl (optionally substituted by C_{1-4} alkyl, C_{1-4} alkoxy or phenyl), (b) thienyl optionally substituted by C_{1-6} alkyl, C_{1-6} alkoxy, C_{5-7} cycloalkyl or phenyl (optionally substituted by C_{1-3} alkyl, C_{1-3} alkoxy or halogen), or (c) naphthyl (optionally substituted by C_{1-4} alkyl or C_{1-4} alkoxy), or (ii) cinnamyl;

R^2 is a hydrogen atom, a methyl group, $-(CH_2)_nOR^3$ (where n is 2-5 and R^3 is C_{1-4} alkyl) or $-CHR^4(CH_2)_mCOOH$ (where R^4 is a hydrogen atom or a methyl group and m is 0-2);

W is straight or branched C_{1-7} alkylene;

X is cis or trans —CH=CH or $-CH_2CH_2-$;

Y is a saturated heterocyclic amino group (attached to the cyclopentane ring via the nitrogen atom) which has 5-8 ring members and (a) optionally contains in the ring —O—, —S—, $-SO_2-$, or $-NR^5$ (where R^5 is a hydrogen atom, C_{1-7} alkyl or aralkyl having a C_{1-4} alkyl portion); or (b) is optionally substituted by one or more C_{1-4} alkyl groups;

and the physiologically acceptable salts and solvates thereof.

9. A pharmaceutical composition comprising a compound as claimed in claim **1** and one or more pharmaceutical carriers.

4,371,531

CEPHALOSPORIN COMPOUNDS

Takao Takaya, Sakai; Takashi Masugi, Toyonaka; Takashi Ogino, Kobe, and Kiyoshi Tsuji, Osaka, all of Japan, assignors to Fujisawa Pharmaceutical Company, Ltd., Osaka, Japan

Division of Ser. No. 916,858, Jun. 19, 1978, Pat. No. 4,242,510, which is a continuation-in-part of Ser. No. 863,923, Dec. 23, 1977, abandoned. This application Aug. 18, 1980, Ser. No. 178,898

Claims priority, application Japan, Dec. 27, 1976, 51-160698; Dec. 5, 1977, 52-146327

Int. Cl.^{3} A61K *31/545*

U.S. Cl. 424—246 **30 Claims**

1. A compound of the formula:

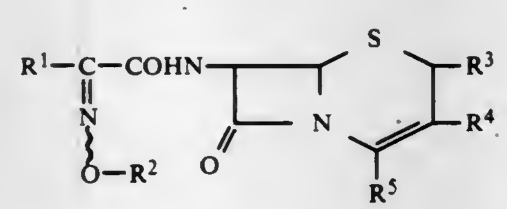

wherein R^1 is a group of the formula:

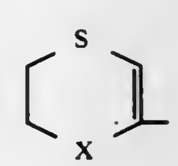

in which

X is sulfur, oxygen, imino or lower alkanoyl-substituted imino,

R^2 is hydrogen, lower alkyl or lower alkenyl,

R^3 is hydrogen or lower alkyl,

R^4 is hydrogen, halogen, lower alkyl, carbamoyloxymethyl or lower alkanoyloxymethyl, and

R^5 is carboxy or its ester, and a non-toxic, pharmaceutically acceptable salt thereof.

30. A pharmaceutical composition which comprises an effective amount of a compound according to claim **1** as an active ingredient and pharmaceutically acceptable, nontoxic carrier(s).

4,371,532

MALONAMIDOOXADETHIACEPHEM COMPOUNDS

Masayuki Narisada, Ibaraki, and Tetsuo Okada, Sakai, both of Japan, assignors to Shionogi & Co., Ltd., Osaka, Japan

Filed Jan. 22, 1981, Ser. No. 227,202

Claims priority, application Japan, Jan. 22, 1980, 55-5313

Int. Cl.^{3} C07D *413/14, 498/04;* **A61K** *31/535, 31/425*

U.S. Cl. 424—248.51 **15 Claims**

1. A compound of the following formula

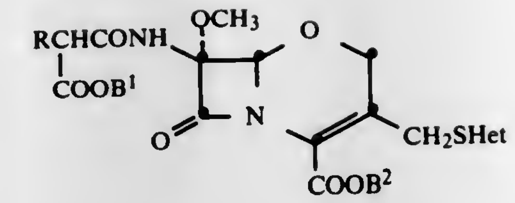

wherein

R is C_1 to C_6-alkyl, C_2 to C_5-alkenyl, C_2 to C_5-alkynyl or C_1 to C_2-alkylthio-C_1 to C_2-alkyl;

Het is a member selected from the group consisting of 2-methyl-1,3,4-thiadiazol-5-yl, 1-methyl-5-tetrazolyl, and 2-thiadiazolyl; and

B^1 and B^2 each is (1) a hydrogen atom, (2) an ester protecting group selected from the group consisting of mono- or di-cyclic aralkyl, C_4 to C_{10}-tertiary alkyl, C_1 to C_{10}-β-haloalkyl and C_3 to C_8-β-alkylsulfonylalkyl, (3) a pharmaceutically acceptable ester selected from the group consisting of straight or branched chain C_3 to C_{19}-alkanoyloxyalkyl, C_3 to C_6-alkoxycarbonyloxyalkyl, C_4 to C_6-tertiary alkyl, C_7 to C_{13}-aralkyl and C_7 to C_9-aryl, and (4) a pharmaceutically acceptable salt forming atom or group.

14. An antibacterial composition comprising an antibacterially effective amount of a compound according to claim **1** as an active ingredient and a pharmaceutically acceptable carrier therefor.

4,371,533

4,5-DEOXYMAYTANSINOIDS, THEIR USE AND PHARMACEUTICAL COMPOSITIONS THEREOF

Hiroshi Akimoto, and Akiyoshi Kawai, both of Kobe, Japan, assignors to Takeda Chemical Industries, Ltd., Osaka, Japan

Filed Sep. 29, 1981, Ser. No. 306,776

Claims priority, application Japan, Oct. 8, 1980, PCT/JP80/00240

Int. Cl.^{3} C07D *498/16;* **A61K** *31/535*

U.S. Cl. 424—248.54 **12 Claims**

1. A compound of the formula:

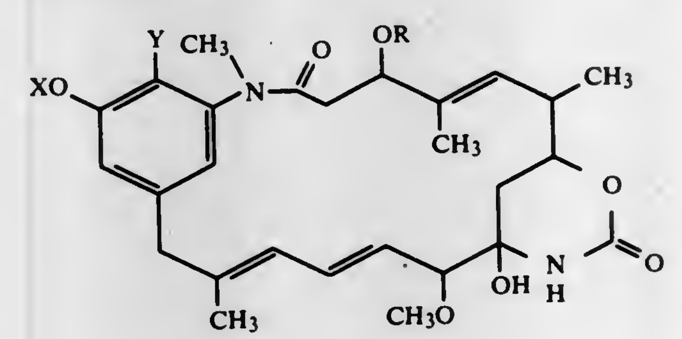

wherein

X is hydrogen, C_{1-8}alkyl which is unsubstituted or substituted with halogen, carboxyl, C_{2-5} alkoxycarbonyl, phenoxycarbonyl, C_{1-4} alkoxy, benzyloxy, C_{1-4} alkylthio, benzylthio, phenylthio, C_{1-4} alkylsulfinyl, benzylsulfinyl, phenylsulfinyl, C_{1-4} alkylsulfonyl, benzylsulfonyl, phenylsulfonyl, C_{1-5} alkanoyloxy, benzoyloxy, phenylacetyloxy, cyano, di(C_{1-4}alkyl)amino, oxo, (C_{1-4})-1-alkylidene, phenyl, α- or β-naphthyl, vinyl, ethynyl, C_{3-6} cycloalkyl, pyridyl, pyrimidyl, pyrazinyl, pyridazinyl, triazinyl, piperidinyl, piperazinyl, pyrrolyl, pyrrolidinyl, pyrrolinyl, imidazolyl, pyrazolyl, triazolyl, tetrazolyl, imidazolinyl, pyrazolidinyl, imidazolidinyl, triazolidinyl, furyl, furanyl, tetrahydrofuryl, thienyl, morpholino, oxazolyl, oxazolinyl, thiazolyl, thiazolinyl, oxadiazolyl, thiadiazolyl, oxiranyl, dioxolanyl or/and dithiolanyl,

or X is acyl derived from a C_{1-20} carboxylic acid of the formula:

$-COR^1$

wherein R^1 is hydrogen, C_{1-18} alkyl, C_{2-10} alkenyl, C_{3-10} cycloalkyl, C_{3-10} cycloalkenyl, phenyl, naphthyl, any of said groups being unsubstituted or substituted by C_{1-4} alkoxy, C_{2-4} alkanoyl, C_{2-4} alkanoyloxy, C_{2-4} alkoxycarbonyl, halogen, hydroxyl, nitro, cyano, trifluoromethyl, amino, mono(C_{1-4} alkyl)amino, di(C_{1-4} alkyl)amino, C_{1-4} alkylthio, C_{1-4} alkylsulfinyl, C_{1-4} alkanesulfonyl, oxo, thioxo or C_{1-4} alkanoylamino, and said cycloalkyl, cycloalkenyl, phenyl and naphthyl being attached, directly or through C_{1-4} alkylene, to the carbonyl radical in the acyl group,

or X is of the formula:

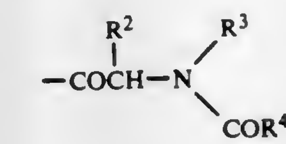

wherein

R^2 is hydrogen, C_{1-18} alkyl, C_{3-10} cycloalkyl, phenyl or naphthyl,

R^3 is hydrogen, C_{1-18} alkyl, C_{3-10} cycloalkyl, phenyl or naphthyl, and

R^4 is hydrogen, C_{1-18} alkyl, C_{2-10} alkenyl, C_{3-10} cycloalkyl, phenyl or naphthyl, any of said groups in R^2, R^3 and R^4 being unsubstituted or substituted by C_{1-4} alkoxy, C_{2-4} alkanoyl, C_{2-4} alkanoyloxy, C_{2-4} alkoxycarbonyl, halogen, hydroxyl, nitro, cyano, trifluoromethyl, amino, mono(C_{1-4} alkyl) amino, di(C_{1-4} alkyl) amino, C_{1-4} alkylthio, C_{1-4} alkylsulfinyl, C_{1-4} alkanesulfonyl, oxo, thioxo or C_{1-4} alkanoylamino, and said cycloalkyl, cycloalkenyl, phenyl and naphthyl in R^2, R^3 and R^4 being attached, directly or through C_{1-4} alkylene, to the α-carbon atom, N-atom or the carbonyl group on the N-atom,

or wherein X is acyl derived from an organic sulfonic acid of the formula:

$-SO_2R^5$

wherein

R^5 is C_{1-4} alkyl or C_{7-9} aralkyl or acyl derived from carbamic acid of the formula:

$-CONR^6R^7$

wherein

R^6 and R^7 are the same or different and each is hydrogen, C_{1-6} alkyl, C_{3-6} cycloalkyl, benzyl, phenethyl, phenyl or α- or β-naphthyl;

Y is hydrogen or chlorine; and

R is hydrogen or acyl derived from C_{1-20} carboxylic acid of the formula:

$-COR^1$

wherein R^1 is the same as defined above, or R is of the formula:

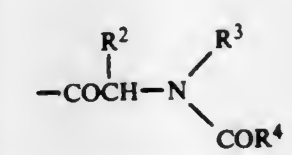

wherein R^2, R^3 and R^4 are the same as defined above.

12. A method for inhibiting the growth of tumor cells and prolonging the survival time of a warm-blooded animal, which comprises administering to said animal an effective amount of a compound of claim **4, 5, 6, 7, 8, 9, 10, 1, 2** or **3**.

4,371,534

N4-SUBSTITUTED TETRAHYDRO-1,2,4-OXADIAZIN-5-ONE DERIVATIVES HAVING ANTICONVULSIVE ACTIVITY AND PHARMACEUTICAL COMPOSITIONS CONTAINING THEM

Laszlo Ürogdi; Agnes Patthy nee Lukats; Lajos Kisfaludy; Ernö Moravcsik; Helga Tüdos nee Feur; László Ötvös; Zsuzsanna Tegyei; Eva Pálosi; Ádám Sarkadi; László Szporny, all of Budapest, Hungary

Filed Dec. 29, 1981, Ser. No. 335,342

Claims priority, application Hungary, Dec. 31, 1980, 3165/80

Int. Cl.[3] A61K *31/535;* C07D *273/04*

U.S. Cl. 424—248.55 5 Claims

1. A tetrahydro-1,2,4-oxadiazin-5-one of the formula (1)

(1)

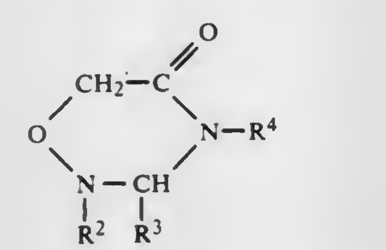

wherein

R^2 is benzyloxycarbonyl or alkylcarbonyl containing 1 to 4 carbon atoms in the alkyl moiety;

R^3 is phenyl optionally substituted by 1 to 3 lower alkoxy groups;

R^4 is an aliphatic or cyclic alkyl group having 1 to 11 carbon atoms, hydroxymethyl, halogenmethyl or acyloxymethyl.

5. A anticonvulsive composition which comprises as active ingredient a pharmaceutically effective amount of a compound of formula (1), in which R^2, R^3 and R^4 are as defined in claim 1, in association with at least one pharmaceutically inert carrier or diluent.

4,371,535

METHOD OF AND COMPOSITION FOR DELIVERING 5-FLUOROURACIL TO TUMORS

Norio Unemi; Kenji Kitazato, and Setsuro Fujii, all of Tokushima, Japan, assignors to Taiho Pharmaceutical Company Limited, Tokyo, Japan

Continuation-in-part of Ser. No. 902,505, May 3, 1978, abandoned, which is a continuation of Ser. No. 735,019, Oct. 22, 1976, abandoned. This application Nov. 5, 1979, Ser. No. 91,530

Claims priority, application United Kingdom, Jan. 7, 1976, 0040776

Int. Cl.[3] A61K *31/505*

U.S. Cl. 424—251 12 Claims

1. A method of delivering 5-fluorouracil to a cancer in a patient, wherein the cancer is sensitive to 5-fluorouracil therapy, said method comprising administering to said patient an amount of 1,3-bis(2-tetrahydrofuryl)-5-fluorouracil which is effective to deliver an anti-cancer effective amount of 5-fluorouracil to said cancer.

4,371,536

β-CARBOLIN-3-CARBOXYLIC ACID DERIVATIVES

Claus T. Braestrup, Gentofte; Mogens C. Nielsen, Roskilde; Joergen A. Christensen, Virum; Mogens Engelstoft, Vaerloese; Henning Schou, Copenhagen, all of Denmark; Ulrich Eder, Berlin, Fed. Rep. of Germany; Günter Neef, Berlin, Fed. Rep. of Germany; Andreas Huth, Berlin, Fed. Rep. of Germany; Dieter Rahtz, Berlin, Fed. Rep. of Germany, and Ralph Schmiechen, Berlin, Fed. Rep. of Germany, assignors to A/S Ferrosan, Soeborg, Denmark and Scherling AG, Berlin, Fed. Rep. of Germany

Filed Aug. 28, 1980, Ser. No. 182,244

Claims priority, application Denmark, Aug. 29, 1979, 3622/79; Sep. 29, 1980, 889/80; Fed. Rep. of Germany, Apr. 22, 1980, 3015816; Jun. 20, 1980, 3023567

Int. Cl.[3] A61K *31/435;* C07D *487/14*

U.S. Cl. 424—256 6 Claims

1. A β-carbolin-3-carboxylic acid derivative of the formula

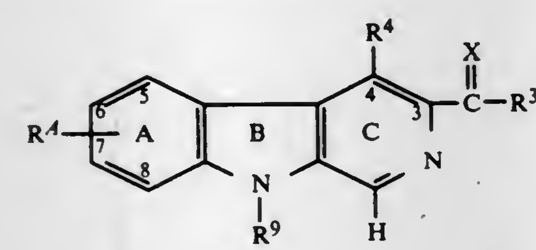

wherein:

X is oxygen or sulfur;

R^3 is C_{1-10}-alkoxy, propenyloxy, benzyloxy, trifluoromethylmethoxy or C_{1-6}-hydroxyalkoxy;

R^4 is H, C_{1-5}-alkyl, cyclopentyl, cyclohexyl, phenyl, or p-methoxyphenyl;

R^A is nitro, SCH_3, or $NR^{13}R^{14}$, wherein R^{14} is hydrogen or C_{1-6}-alkyl; and

R^9 is hydrogen.

4,371,537

SULFUR-SUBSTITUTED PHENOXYPYRIDINES HAVING ANTIVIRAL ACTIVITY

Lowell D. Markley, Midland, Mich.; Yulan C. Tong, Walnut Creek, Calif., and Steven G. Wood, Orem, Utah, assignors to The Dow Chemical Company, Midland, Mich.

Filed Aug. 13, 1981, Ser. No. 292,467

Int. Cl.[3] A61K *31/44;* C07D *212/63*

U.S. Cl. 424—263 67 Claims

1. An antiviral compound corresponding to the formula:

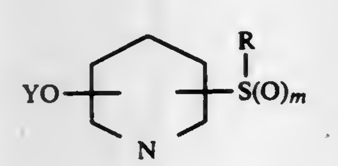

wherein m represents the integer 0, 1 or 2; R represents an alkyl group of from 1 to 7 carbon atoms, inclusive, a cycloalkyl group of 5 or 6 carbon atoms, or a Ar-$(CH_2)_q$- group wherein q represents the integer 0, 1, 2 or 3 and Ar represents an aryl group of from 6 to 10 carbon atoms, inclusive, which aryl group is optionally substituted with 1 to 3 substituents each independently selected from bromo, chloro, fluoro, methyl or methoxy; Y represents:

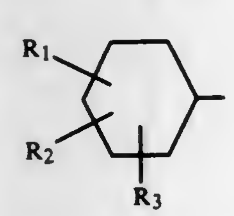

wherein R_1 and R_2 each independently represent hydrogen, bromo, chloro, fluoro, iodo, cyano, nitro, acetyl or the following moieties:

(a) a benzyl, phenoxy or benzoyl group, wherein the benzene ring of the benzyl, phenoxy or benzoyl group is optionally substituted with 1 to 3 substituents each independently selected from bromo, chloro, fluoro, methyl or methoxy;

(b) an alkyl group of 1 to 4 carbon atoms, inclusive, optionally substituted with 1 to 4 substituents each independently selected from bromo, chloro or fluoro;

(c) R_4X-, wherein X represents an oxygen or sulfur atom; and R_4 represents an alkyl group of from 1 to 3 carbon atoms, inclusive, the alkyl portion optionally substituted with 1 to 4 substituents each independently selected from bromo, chloro or fluoro; or

(d) alternatively R_1 and R_2 taken together represent methylenedioxy; and

R_3 represents hydrogen, bromo, chloro, fluoro or iodo; provided that:

(1) in those situations where the —OY radical is attached to the pyridine ring at the 3 position then the

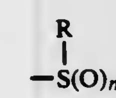

radical is attached at the 5 position;

(2) in those situations where the —OY radical is attached to the pyridine ring at the 4 position then the

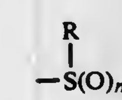

radical is attached at the 2 position;

(3) in those situations where m represents the integer 0 or 1; then:

(i) the radical —OY must be attached to the pyridine ring at the 2 position and the:

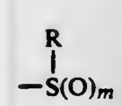

radical at either the 3 or 5 positions; or

(ii) the radical —OY must be attached to the pyridine ring at the 3 position and the:

radical at the 5 position; and

(4) in those situations where R is Ar-$(CH_2)_q$- or optionally substituted Ar-$(CH_2)_q$- and R_2 and R_3 are both hydrogen, then R_1 is a substituent other than hydrogen.

4,371,538

SPIRO DERIVATIVES, PROCESS FOR THEIR PREPARATION AND MEDICATIONS CONTAINING SAME

Georges Tsatsas, Athens; Evan E. Costakis, Paraskevi Attikis, and Georges V. Foscolos, Piraeus, all of Greece, assignors to Etablissements Nativelle S.A., Paris, France

Filed Oct. 9, 1980, Ser. No. 195,692

Claims priority, application France, Oct. 9, 1979, 79 25041

Int. Cl.[3] A61K *31/445;* C07D *307/94*

U.S. Cl. 424—267 8 Claims

1. Spiro derivatives of the general formula (I):

(I)

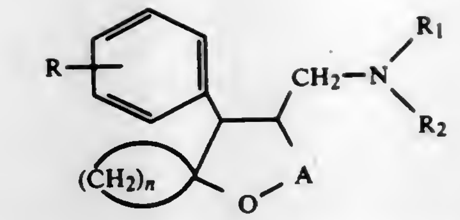

wherein R is a hydrogen atom, a halogen atom, an alkyl group or an alkoxy group; R_1 and R_2, which may be the same or different, represent a hydrogen atom, an alkyl group or together form a nitrogen-containing 5- or 6-membered heterocyclic ring in which the remaining atoms of said ring are carbon atoms; A represents a $>CH_2$ group or a $>CO$ group; and n is 4 or 5 and the pharmaceutically acceptable acid addition salts thereof.

4,371,539

CNS STIMULANTS

Reinhardt P. Stein, Audubon, Pa., assignor to American Home Products Corporation, New York, N.Y.

Filed Apr. 27, 1981, Ser. No. 257,827

Int. Cl.[3] C07D *271/04;* A61K *31/42*

U.S. Cl. 424—272 2 Claims

1. The compound which is 3-[Methyl(phenylmethyl)amino]-N-[(phenylamino)carbonyl]sydnone imine or a pharmaceutically acceptable salt thereof.

2. A method for treating anergia which comprises administering 3-[methyl(phenylmethyl)amino]-N-[(phenylamino)carbonyl]sydnone imine or a pharmaceutically acceptable salt thereof, to a warm blooded animal in need thereof, orally or parenterally, in an amount sufficient to stimulate the central nervous system.

4,371,540

NITROIMIDAZOLES OF LOW TOXICITY AND HIGH ACTIVITY AS RADIOSENSITIZERS OF HYPOXIC TUMOR CELLS

William W. Lee, Palo Alto; J. Martin Brown, Stanford; Abelardo P. Martinez, San Jose, all of Calif., and Michael J. Cory, Chapel Hill, N.C., assignors to The United States of America as represented by the Secretary of the Department of Health and Human Services, Washington, D.C.

Continuation-in-part of Ser. No. 75,603, Sep. 14, 1979, abandoned. This application Aug. 22, 1980, Ser. No. 180,373

Int. Cl.[3] A61K *31/415*

U.S. Cl. 424—273 R 6 Claims

1. Method of radiosensitizing hypoxic tumor cells in a warm-blooded animal with reduced neurotoxic side effects comprising administering a compound of the formula

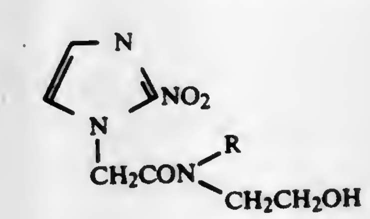

wherein R is hydrogen or a 2-hydroxyethyl radical to the animal systemically at a dosage level that radiosensitizes said cells.

4,371,541
ANTIINFLAMMATORY AND/OR ANALGESIC 3,4-DIHYDRO-(OR 1,4-DIHYDRO)-4-ARYL-2-((SUBSTITUTED)THIO)-(1)-BENZOPYRANO(3,4-D)IMIDAZOLES AND THEIR CORRESPONDING SULFOXIDES AND SULFONES

Michael Finizio, Wilmington, Del., assignor to E. I. Du Pont de Nemours and Company, Wilmington, Del.

Continuation-in-part of Ser. No. 248,009, Mar. 26, 1981, abandoned. This application Jan. 7, 1982, Ser. No. 336,822
Int. Cl.[3] A61K *31/415;* C07D *491/052*
U.S. Cl. 424—273 R 13 Claims

1. A compound of the formula:

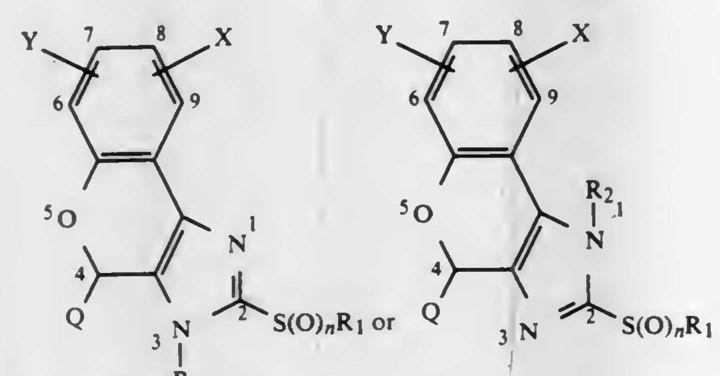

(Ia) (Ib)

wherein

Q is 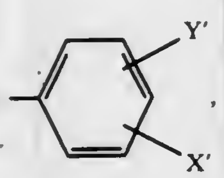

pyridyl or thienyl;
n is 0, 1 or 2;
R_1 is alkyl of 1 or 2 carbon atoms, or mono- or polyhaloalkyl of 1 or 2 carbon atoms;
R_2 is H, C_1-C_6 alkyl,

$$-\underset{R_3}{\underset{|}{\text{CHOR}_4}},$$

2-tetrahydropyranyl,
2-tetrahydrofuranyl, 4-nitrobenzyl,
$-COOR_5$, $-COR_5$, $-COAr$ or $-SO_2Ar$
where
R_3 is H or methyl;
R_4 is alkyl of 1 to 3 carbon atoms, benzyl, $-CH_2CH_2OCH_3$ or $-COR_5$;
R_5 is alkyl of 1–4 carbon atoms, or benzyl;

Ar is 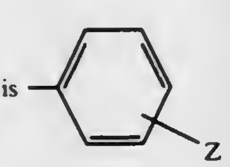

where
Z is H, F, Cl, Br, alkyl of 1–4 carbon atoms, alkoxy of 1–4 carbon atoms or nitro; with the proviso that when R_2 is 4-nitrobenzyl, n is 2 and when R_2 is $-COOR_5$, $-COR_5$, $-COAr$ or $-SO_2Ar$, n is 0;
X, Y, X′ and Y′ are independently H, F, Cl, Br, NO_2, alkoxy of 1 or 2 carbon atoms, $-N(C_{1-2}\ \text{alkyl})_2$, alkyl of 1 or 2 carbon atoms, $-S(O)_mC_{1-2}$ alkyl where m is 0, 1 or 2; with the proviso that when X, Y, X′ or Y′ are H and R_1 is CH_3 then n cannot be 0; or
a pharmaceutically suitable acid addition salt thereof when n is 0 or when X, Y, X′ or Y′ is $-N(C_{1-2}\ \text{alkyl})_2$ or when Q is pyridyl; or
a pharmaceutically suitable metal salt thereof when n is 1 or 2 and R_2=H.

13. A method of treating inflammation, pain or both in a mammal which comprises administering to the mammal an effective antiinflammatory or analgesic amount of at least one compound of claim 1 or claim 2 or claim 3 or claim 4 or claim 5 or claim 6 or claim 7 or claim 8 or claim 9 or claim 10 or claim 11.

4,371,542
HETERO-IMINO-PROSTACYCLINS

Gerhard Beck, Frankfurt am Main; Jochen Knolle, Kriftel; Richard H. Rupp, Frankfurt am Main, and Bernward Schölkens, Kelkheim, all of Fed. Rep. of Germany, assignors to Hoechst Aktiengesellschaft, Frankfurt am Main, Fed. Rep. of Germany

Filed Feb. 20, 1981, Ser. No. 236,634
Claims priority, application Fed. Rep. of Germany, Feb. 23, 1980, 3006865
Int. Cl.[3] C07D *209/52;* A61K *31/40*
U.S. Cl. 424—274 9 Claims

1. A compound of the formula

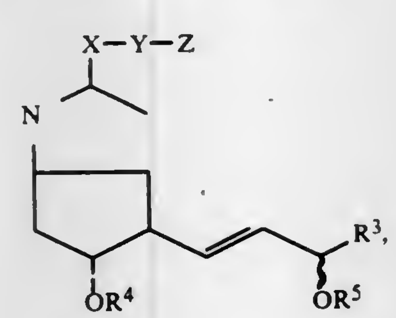

wherein
X is oxygen, sulfur, or —NH—;
Y is linear or branched alkylene having up to 8 carbon atoms, linear or branched alkenylene having 3 to 8 carbon atoms, phenylene, or is cycloaliphatic having 3 to 6 carbon atoms;
Z is $-CO_2R^1$, $-CH_2OH$, or $-CH_2(R^2)_2$,
wherein
R^1 is hydrogen, linear or branched alkyl having up to 8 carbon atoms, linear or branched unsaturated aliphatic hydrocarbon having 3 to 6 carbon atoms, cycloaliphatic hydrocarbon having 3 to 7 carbon atoms, araliphatic hydrocarbon having 7 to 9 carbon atoms, a physiologically acceptable metal ion, NH_4^+, or is a monoalkyl-, dialkyl-, trialkyl-, tetraalkyl-, or cycloalkyl-ammonium ion;
R^2 is hydrogen or is linear or branched aliphatic hydrocarbon having up to 5 carbon atoms, or the two R^2 groups taken together are $-(CH_2)_n-$ wherein n is an integer from 3 to 6 inclusive;
R^3 is phenyl or is phenyl mono-, di-, or tri-substituted by at least one member selected from the group consisting of halogen, trifluoromethyl, alkyl having 1 to 6 carbon atoms, and alkoxy having 1 to 6 carbon atoms, or R^3 is cycloaliphatic having 3 to 8 carbon atoms, or is linear or branched alkyl having up to 8 carbon atoms, or is linear or branched unsaturated aliphatic hydrocarbon having 3 to 8 carbon atoms, or is such cycloaliphatic, alkyl, or unsaturated aliphatic hydrocarbon substituted by
(a) linear or branched alkoxy having up to 6 carbon atoms or linear or branched alkenyloxy or alkynyloxy having 3 to 6 carbon atoms,
(b) halogen, phenyl, α- or β-thienyl, or α- or β-furyl, or such phenyl, thienyl, or furyl mono-, di-, or tri-substituted by halogen, trifluoromethyl, alkyl having 1 to 6 carbon atoms, or alkoxy having 1 to 6 carbon atoms, or
(c) phenoxy, α- or β-thienyloxy, or cycloalkoxy having 3 to 7 carbon atoms, or such phenoxy, thienyloxy, or cycloalkoxy mono-, di-, or tri-substituted by halogen, trifluoromethyl, alkyl having 1 to 6 carbon atoms, or alkoxy having 1 to 6 carbon atoms; and
R^4 and R^5 are each hydrogen or an hydroxy-protective group which can readily be eliminated under neutral or basic conditions.

4,371,543
BIS-AMIDINE INDENE KETONES, COMPOSITIONS CONTAINING SAME AND METHOD OF USE

George C. Rovnyak, Hopewell, N.J., assignor to E. R. Squibb & Sons, Inc., Princeton, N.J.

Filed Jun. 5, 1981, Ser. No. 270,775
Int. Cl.[3] A61K *31/155, 31/195;* C07C *123/00*
U.S. Cl. 424—319 8 Claims

1. A compound of the structure

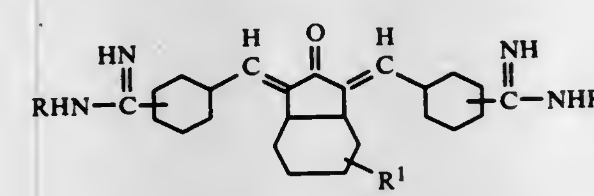

wherein R is H, lower alkyl or phenyl or phenyl substituted with a lower alkyl, lower alkoxy, halogen or a trifluoromethyl group, and R^1 is H, lower alkyl, halogen, carboxy, trifluoromethyl, lower alkyl, hydroxy, lower alkanoyl, or benzoyl or benzoyl substituted with a lower alkyl, lower alkoxy, halogen or a trifluoromethyl group, or acid-addition salts thereof.

7. An anti-inflammatory composition comprising a therapeutically effective amount of a compound as defined in claim 1 in a physiologically acceptable carrier therefor.

8. A method for treating an inflammatory condition in a mammalian host, which comprises administering an effective amount of the composition as defined in claim 7.

4,371,544
PHARMACEUTICAL COMPOSITION CONTAINING 1,1,3,5-SUBSTITUTED BIURET COMPOUND

Hajime Fujimura, Kyoto; Yasuzo Hiramatsu, Otsu; Takahiro Yabuuchi, Takarazuka; Masakatu Hisaki, Hikone; Katsuo Takikawa, Naruto; Takaji Honna, Tokushima; Hidekazu Miyake, Tokushima, and Makoto Kajitani, Tokushima, all of Japan, assignors to Taiho Pharmaceutical Company Limited, Tokyo, Japan

Division of Ser. No. 134,555, Mar. 27, 1980, Pat. No. 4,278,672. This application Apr. 24, 1981, Ser. No. 257,418
Claims priority, application Japan, Mar. 31, 1979, 54/38792; Mar. 31, 1979, 54/38794
Int. Cl.[3] A61K *31/17*
U.S. Cl. 424—322 2 Claims

1. An analgesic, anti-inflammatory or anti-pyretic composition in the form of a tablet, capsule, granules, powder, injection preparation, suppository preparations, topical ointment or cream or per oral syrup, elixir or oily suspension containing as the active ingredient an effective amount of 1,1,3,5-substituted biuret compound of the formula (1),

$$R^1-\overset{R^2}{\overset{|}{N}}-\underset{O}{\underset{\|}{C}}-\overset{R^3}{\overset{|}{N}}-\underset{O}{\underset{\|}{C}}-NH-R^4 \quad (1)$$

wherein R^1 is a lower alkyl group or a phenyl group; R^2 is a lower alkyl group, a phenyl group or a substituted phenyl group having chlorine atom(s), methyl group(s) or methoxy group(s) as the substituent(s), further R^1 and R^2 may form a single ring containing one or two hetero atoms including the adjacent nitrogen atom; R^3 is a hydrogen atom, a lower alkyl group or a phenyl group; R^4 is a substituted phenyl group having at least one acetyl group as a substituent thereon; with a pharmaceutically acceptable carrier.

4,371,545
ISOPROPYL AMINE COMPOUNDS

Wilhelm Kunz, Wachtberg-Villiprott, and Klaus Gruber, Bonn, both of Fed. Rep. of Germany, assignors to Dolorgiet Beteiligungs GmbH, Fed. Rep. of Germany

Continuation-in-part of Ser. No. 73,369, Sep. 7, 1979, abandoned. This application Mar. 17, 1981, Ser. No. 244,823
Claims priority, application Fed. Rep. of Germany, Sep. 11, 1978, 2839475
Int. Cl.[3] C07C *93/02;* A61K *31/135*
U.S. Cl. 424—330 3 Claims

1. The compound 1-(5-methyl-2-nitrophenoxy)-2-hydroxy-3-isopropylaminopropane or a physiologically acceptable salt thereof.

2. A pharmaceutical preparation comprising the compound according to claim 1 or a physiological salt thereof and a pharmaceutically acceptable carrier or diluent.

4,371,546
BENZOPHENONE DERIVATIVES

Jacob J. Plattner, Libertyville; Andre G. Pernet, Evanston, and Anthony K. Fung, Waukegan, all of Ill., assignors to Abbott Laboratories, North Chicago, Ill.

Filed Oct. 9, 1981, Ser. No. 310,165
Int. Cl.[3] A61K *31/135;* C07C *97/10*
U.S. Cl. 424—330 15 Claims

1. A compound of the formula

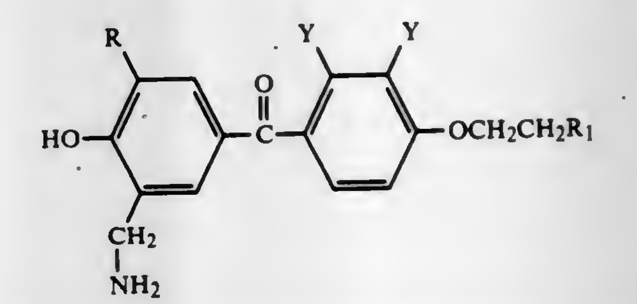

wherein R is hydrogen, loweralkyl, aminomethyl or halo, R_1 is hydroxy or NHX wherein X is hydrogen, loweralkyl, phenyl, acetyl, or benzyl, and Y may be the same or different and is hydrogen, loweralkyl, or halo, and pharmaceutically acceptable salts thereof.

6. A method of increasing the urinary excretion of a patient comprising administering to a patient in need of such treatment a therapeutically effective amount of a diuretic agent of the formula

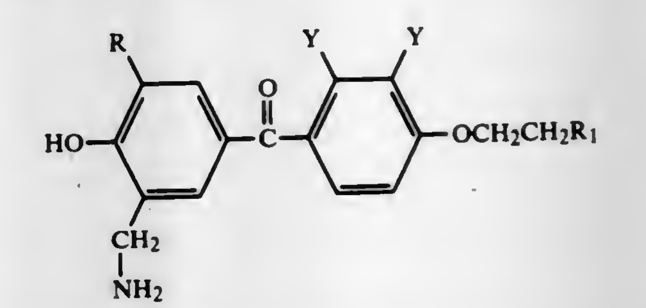

wherein R is hydrogen, loweralkyl, aminomethyl or halo, R_1 is hydroxy or NHX wherein X is hydrogen, loweralkyl, phenyl, acetyl, or benzyl, and Y may be the same or different and is hydrogen, loweralkyl or halo, and pharmaceutically acceptable salts thereof.

11. A pharmaceutical composition useful as a diuretic which comprises a therapeutically effective amount of a compound of the formula

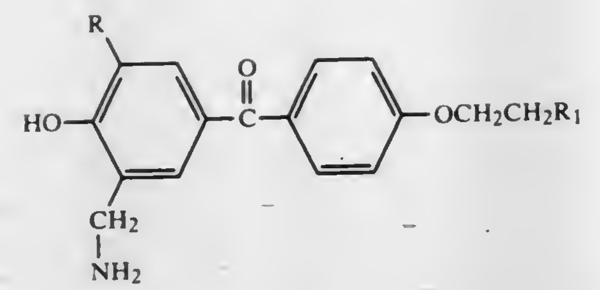

wherein R is hydrogen, loweralkyl, aminomethyl or halo, R_1 is hydroxy or NHX wherein X is hydrogen, loweralkyl, phenyl, acetyl, or benzyl, and Y may be the same or different and is hydrogen, loweralkyl, or halo, and pharmaceutically acceptable salts thereof, and a pharmaceutically acceptable carrier.

4,371,547

2-BENZYLIDENEGLUTARALDEHYDES USEFUL AS DISINFECTANTS

Wolfgang Münzenmaier, Wennigsen; Heinz Eggensperger, Hamburg; Helmut H. Ehlers, Hamburg; Wolfgang Beilfuss, Hamburg; Lothar Bücklers, Norderstedt, and Hans-Peter Harke, Hamburg, all of Fed. Rep. of Germany, assignors to Sterling Drug Inc., New York, N.Y.

Filed Aug. 21, 1981, Ser. No. 294,890

Claims priority, application Fed. Rep. of Germany, Aug. 30, 1980, 3032794

Int. Cl.[3] C07C *47/548;* A61K *31/11;* C07C *143/38, 143/44*

U.S. Cl. 424—333 23 Claims

1. A 2-benzylideneglutaraldehyde represented by the formula

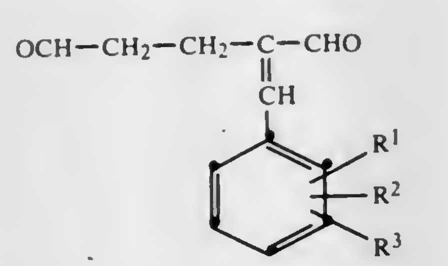

where R^1, R^2 and R^3 independently are hydrogen or a substituent selected from the group consisting of halo, lower-alkyl, phenyl, carboxy, lower-alkoxycarbonyl, phenoxycarbonyl, aminocarbonyl, hydroxysulfonyl, nitro, cyano, hydroxy, lower-alkoxy and phenoxy.

17. A method for disinfecting an inanimate surface contaminated with deleterious microorganisms which comprises contacting said surface with an amount effective for disinfection thereof of a 2-benzylideneglutaraldehyde represented by the formula

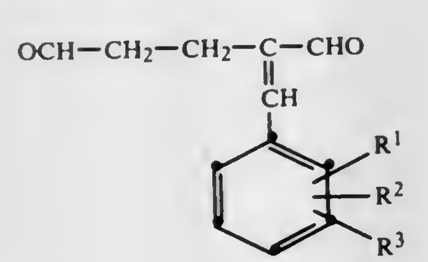

where R^1, R^2 and R^3 independently are hydrogen or a substituent selected from the group consisting of halo, lower-alkyl, phenyl, carboxy, lower-alkoxycarbonyl, phenoxycarbonyl, aminocarbonyl, hydroxysulfonyl, nitro, cyano, hydroxy, lower-alkoxy and phenoxy.

4,371,548

DETERGENT-OIL BATH ADDITIVES

Claus Hermann, Baden-Baden, and Helmut Krings, Achern-Oensbach, both of Fed. Rep. of Germany, assignors to Lingner and Fischer GmbH, Fed. Rep. of Germany

Filed Sep. 17, 1980, Ser. No. 188,066

Claims priority, application Fed. Rep. of Germany, Sep. 22, 1979, 7932944

Int. Cl.[3] A61K *7/00*

U.S. Cl. 424—365 9 Claims

1. A homogeneous, detergent-oil skin-care bathing composition having foaming and oil-deposition properties, which comprises;

(i) from 20 to 70% by weight of the composition of a detergent blend consisting of:

(a) from 10 to 90% by weight of the blend of at least one amine C_{8-18} fatty alcohol sulphate optionally ethoxylated in the C_{8-18} fatty alcohol sulphate anion, and

(b) from 90 to 10% by weight of the blend of a metal ethoxylated C_{8-18} fatty alcohol sulphate or ammonium ethoxylated C_{8-18} fatty alcohol sulphate; and

(ii) from 20 to 60% by weight of the composition of a cosmetically acceptable oil.

4,371,549

STABLE LIQUID RED BEET COLOR AND CHEWING GUM CONTAINING SAME

Subraman R. Cherukuri; Dominick R. Friello, both of Danbury, Conn.; Ellery Parker, Johnstown, N.Y.; Walter Hopkins, Greenwich, Conn., and Donald A. M. Mackay, Pleasantville, N.Y., assignors to Nabisco Brands, Inc., New York, N.Y.

Filed Jun. 1, 1981, Ser. No. 268,945

Int. Cl.[3] A23G *3/30;* A23L *1/275*

U.S. Cl. 426—3 8 Claims

1. A stable liquid red beet color composition consisting essentially of spray-dried liquid red beet color, said spray-dried red beet color being deposited on particles of gum arabic or malto dextrin and dispersed in liquid medium which is an animal or vegetable food grade fatty acid or oil, propylene glycol or glycerine, in an amount such that said spray-dried liquid red beet color is present within the range of from about 30 to about 70% by weight and said liquid medium is present in an amount within the range from about 30 to 70% by weight based on the weight of said stable liquid red beet color composition.

4,371,550

PROCESS FOR BREWING BEER

Yoshiaki Nagashima, Mitaka; Yoshiomi Kimura, Yokohama, and Naoki Hashimoto, Takasaki, all of Japan, assignors to Kirin Beer Kabushiki Kaisha, Tokyo, Japan

Filed Feb. 13, 1981, Ser. No. 234,138

Claims priority, application Japan, Feb. 20, 1980, 55-19881

Int. Cl.[3] C12C *9/00, 11/04*

U.S. Cl. 426—16 7 Claims

1. A beer brewing process which comprises mixing one part by volume of a high-gravity liquor comprising a fermenting wort of an original gravity of 14 to 21 degrees Plato which has passed through the high kraeusen period and two to five parts by volume of a low-gravity liquor comprising a fermenting wort or wort of an original gravity of 3 to 6 degrees Plato and subjecting the resulting mixture to fermentation thereby to obtain a beer of an original gravity of 6 to 9 degrees Plato, the wort to provide the high-gravity liquor and the low-gravity liquor being obtained from a mash comprising a mixture of malt and 0 to 50 percent of the weight of the malt of an adjunct on the basis of the two liquors after mixing thereof, and the total nitrogen content of the low-gravity liquor being at least 30 mg./100 g.

4,371,551

MALT-LIKE FLAVOR FROM CEREAL GRAIN ROOT CULTURES

Charles V. Fulger, Millwood; Gerhard J. Haas, Woodcliff Lake; Edwin B. Herman, Mohegan Lake, and Charles R. Lazarus, Ossining, all of N.Y., assignors to General Foods Corporation, White Plains, N.Y.

Filed Mar. 20, 1981, Ser. No. 245,804

Int. Cl.[3] A23L *1/185*

U.S. Cl. 426—28 7 Claims

1. A process for the preparation of a composition possessing a malt-like flavor from buckwheat which comprises:

(a) germinating a buckwheat seed until sprouted roots develop therefrom;

(b) explanting said sprouted roots from the cereal grain seed and placing them onto a nutrient medium;

(c) culturing the roots until they have matured sufficiently by harvesting;

(d) harvesting the cultured roots prior to production of necrotic material; and

(e) heating the harvested cultured roots until a malt-like flavor is developed.

4,371,552

PRUNE JUICE PRODUCTION USING CELLULASE

Laurence H. Posorske, Bethel, Conn., assignor to Novo Industri A/S, Denmark

Continuation of Ser. No. 121,146, Feb. 13, 1980, abandoned. This application Sep. 8, 1981, Ser. No. 300,322

Int. Cl.[3] A23L *1/28, 2/04*

U.S. Cl. 426—50 8 Claims

1. A method for obtaining prune juice of viscosity 7–15 cps and exceeding 18.5° Brix which comprises cooking dried prunes until substantial disintegration of the prunes has taken place, then treating the cooked mixture with cellulase for ½–6 hours at a concentration of 100 to 7500 units/kg prune slurry, and with pectinase at a concentration of 10 to 200 units/kg prune slurry and separating the prune juice from the solid prune waste.

4,371,553

PACKAGE INCLUDING PRODUCT SUPPORT INSERT

Donald A. Gilling, Neenah, Wis., and Albert G. McCaskill, Minneapolis, Minn., assignors to James River-Dixie/Northern, Inc., Greenwich, Conn.

Filed Aug. 1, 1980, Ser. No. 174,557

Int. Cl.[3] B65D *85/62, 81/20, 77/24, 75/38*

U.S. Cl. 426—124 7 Claims

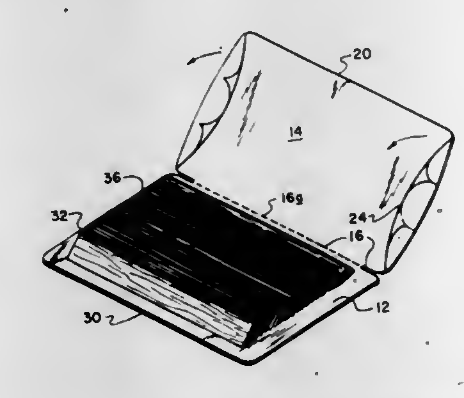

1. Paperboard and plastic film packaging including an element adapted to support and retain sliced product in a shingled array, and to facilitate substantially smooth disposition thereabout of the plastic film and subsequent sealing thereof to form a unitary film enclosure for said element and said product, said packaging comprising:

a supporting panel and a retaining panel, said supporting and retaining panels each being generally rectangular, having two longer sides and side edges defining the length of each panel and two shorter ends and end edges defining the width of each panel, and being joined together by a hinge line along common side edges, such that said retaining panel may be rotated about said hinge line and over said supporting panel;

said retaining panel having, on each end thereof, a transverse line of weak bending resistance extending in a continuous arc, from the vicinity of the intersections of said common side edge and said end edges, inwardly of said end edges, across the width of said retaining panel, to the adjoining intersection of the same respective end edges and the opposite side edge, said lines of weak bending resistance and their respective end edges defining cover flaps on the ends of said retaining panel;

each said cover flap having segmental lines of weak bending resistance extending from the corresponding end edge substantially to the corresponding transverse line of weak bending resistance and back to the corresponding end edge; and

said supporting panel having sides and ends corresponding to the sides and ends of said retaining panel respectively when said retaining panel overlies said supporting panel, and each said cover flap being bendable about said lines of weak bending resistance to engage the corresponding end of said retaining panel with the corresponding end of said support panel, said ends of said supporting panel being devoid of lines of weak bending resistance corresponding to both said transverse and said segmental lines of weak bending resistance on said cover flaps, wherein disposition of the plastic film wrapped about said packaging element and its supported and retained sliced product and subjection to evacuation and a sealing force is effective to urge said panels against said product and to collapse said cover flaps about said lines of weak bending resistance to urge the collapsed cover flaps against said product and the corresponding end of said supporting panel to provide a smooth surface of the collapsed cover flaps over which cover flaps the plastic film conforms.

4,371,554

METHOD OF MAKING SKINLESS SAUSAGE USING REUSABLE POROUS POLYTETRAFLUOROETHYLENE CASING

Heinz Becker, Zurich, Switzerland, assignor to Ashland Food Technology Holdings S.A., Luxembourg

Filed Oct. 27, 1980, Ser. No. 201,155

Claims priority, application Switzerland, Nov. 9, 1979, 10067/79

Int. Cl.[3] A22C *11/00, 13/00;* A23L *1/31*

U.S. Cl. 426—243 7 Claims

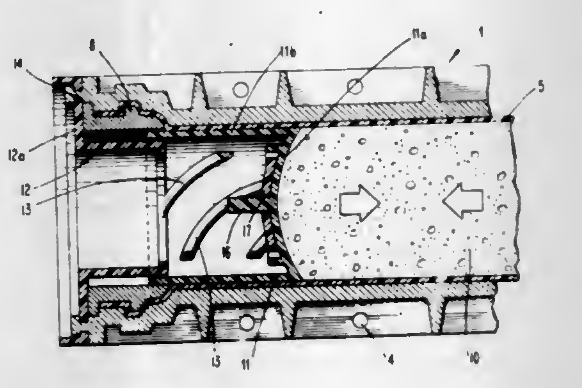

1. A process for the production of caseless sausages, the process comprising the steps of inserting pliable, reusable porous casings into casing support structures, the pliable casings conforming to the internal cross-sectional shape of the support structures, the reusable tubular casings being formed of a vapor-permeable highly porous polytetrafluoroethylene membrane having a microstructure of nodes interconnected by fibrils, said membrane being heat stable, and non-adherent to bulk sausage; filling the reusable casings with unprocessed sausage material; reddening the sausage material to a desired

degree of redness by heating the filled casings; coagulating the bulk sausage material by continued heating of the sausage material, said reddening and coagulating steps including the concurrent steps of venting radially through the porous casing excess steam, water vapor, and other gaseous constituents released by the sausage material during said reddening and coagulating steps; ejecting the coagulated sausage material from the porous casings, the integrity of the membrane being maintained during said ejection step, and the external surface of the ejected sausage being smooth and its integrity being maintained during the ejection step; cleaning said reusable casings for subsequent refill with unprocessed sausage material; and refilling the reusable casings.

4,371,555

METHOD FOR DYEING EGGS

Paul R. Tully, 42 Windward Rd., Lowell, Mass. 01852

Filed Oct. 22, 1981, Ser. No. 313,834

Int. Cl.[3] A23L *1/275, 1/321*

U.S. Cl. 426—250 **10 Claims**

1. A process for preparing a colored avian egg having a mottled decorative appearance which comprises:

applying a thin coating of a comestible oil onto the eggshell;

temporarily adhering a hydrophobic water-insoluble granular solid to the oil-coated eggshell;

dyeing the grain-coated egg by applying thereto an aqueous dyestuff; and

removing the temporarily adhered granular solid from the dyed egg.

4,371,556

SOY-CONTAINING DOG FOOD

Esra Pitchon, Flushing, N.Y.; Robert E. Schara, Norwalk, Conn.; William P. Citarella, Port Chester, N.Y.; Joseph Giacone, Purdy's, N.Y., and Frederick A. Zobel, Bedford Hills, N.Y., assignors to General Foods Corporation, White Plains, N.Y.

Filed Sep. 30, 1980, Ser. No. 192,267

Int. Cl.[3] A23K *1/18*

U.S. Cl. 426—311 **1 Claim**

1. In a process for preparing a soy-containing dog food wherein fat, protein, carbohydrate, vitamins and minerals are admixed in amounts effective to provide a nutritionally-balanced formulation and wherein the ingredients are mixed with sufficient water to provide a plastic mixture, which mixture is agitated under conditions of heat and pressure in a screw-fed extruder from a zone of high pressure to a zone of reduced pressure to effect expansion of the mixture, and then dried to a moisture content of less than 15% the improvement comprising, roasting whole soybeans at a temperature of from 100° C. to 130° C. and for a time effective to improve the palatability of a dog food which contains from 10 to 25% by weight of said roasted soy, surface coating the roasted soybeans with soybean oil in an amount of from 2 to 20% by weight of the beans, while the beans are still hot, grinding the heated oil-coated beans and thereafter admixing the ground soybeans with the remainder of the dog food formulation so that ground soybeans are present at a level of from 10 to 25% by weight of the dog food.

4,371,557

MAINTENANCE OF PROTEIN QUALITY IN FOODS CONTAINING REDUCING SUGARS

Maureen A. Oppy, Bourbonnais, and Dayle A. S. Nelson, New Lenox, both of Ill., assignors to General Foods Corporation, White Plains, N.Y.

Filed Jan. 21, 1981, Ser. No. 226,671

Int. Cl.[3] A23K *1/00, 1/10*

U.S. Cl. 426—321 **3 Claims**

1. An improved proteinaceous, nutritionally-balanced pet food composition containing a protein content of from 15 to 25% by weight, at least about 8% by weight reducing sugar and from 15% to 50% by weight of moisture, said reducing sugar and moisture being present in amounts normally susceptible to causing the loss of protein quality and further containing glycine or a soluble salt thereof in an amount of from about 0.25% to 1% by weight and effective to stabilize the protein quality.

4,371,558

SEMI-MOIST DOG FOOD PREPARATION

John A. Siregar, Reading, and John Arkoudilos, Allentown, both of Pa., assignors to Liggett Group Inc., Montvale, N.J.

Filed Feb. 11, 1981, Ser. No. 233,455

Int. Cl.[3] A23K *1/10, 1/18*

U.S. Cl. 426—332 **7 Claims**

1. The process of preparing a cooked semi-moist pet food product comprising the steps of:

(a) admixing and cooking ground meat or meat by-products with water, propylene glycol, phosphoric acid and one or more acids selected from the group consisting of fumaric acid and succinic acid, said cooking step being carried out at a temperature in the range of between about 180° F. and 210° F. for times corresponding to about 30–10 minutes, and said cooked admixture being a substantially soupy consistency; and,

(b) further admixing and cooking therewith non-gellatinous water absorbent ingredients in sufficient proportion to render the admixture a free-flowing semi-moist relatively solid mass, and said cooling step being carried out at a temperature in the range of between about 180° F. and 210° F. for times corresponding to about 30–10 minutes;

and wherein the proportion of water in said product is between about 38% and 52% by weight.

4,371,559

PROCESS FOR LOWERING THE FREEZING POINT OF ANISE ESSENCES AND ANETHOLE BY NATURAL PRODUCTS

Max Voisin, 23, Rue Fourcroy, 75017 Paris, France

Filed May 21, 1981, Ser. No. 265,942

Claims priority, application Luxembourg, May 22, 1980, 82480

Int. Cl.[3] A23L *1/22, 1/226*

U.S. Cl. 426—538 **4 Claims**

1. A process for lowering the freezing point of anise essense or anethole which comprises adding thereto an amount of an orange terpene, a limonene or mixture thereof sufficient to lower the freezing point of said anise essence or anethole to between about −4° and −6° C., said orange terpene, limonene or mixture thereof being soluble and miscible with said anise essence or anethole and an alcohol acceptable in foodstuffs and having been deodorized with activated vegetable carbon and dewaxed.

4,371,560

SEAFOOD PRODUCT AND METHOD OF PRODUCING SAME

Arthur Hochhauser, Allentown, Pa., and Richard B. Jackson, Brooklyn, N.Y., assignors to DCA Food Industries, New York, N.Y.

Continuation of Ser. No. 138,137, Apr. 7, 1980, abandoned. This application Nov. 5, 1981, Ser. No. 318,388

Int. Cl.[3] A22C *25/00, 29/02*

U.S. Cl. 426—643 **8 Claims**

1. A method of producing a seafood product which comprises the steps of providing pieces of a natural seafood, mechanically working the natural seafood pieces for a time and at an energy rate sufficient to at least partially break up muscle fiber present in the natural seafood pieces and to produce a coherent mass of protein as a homogeneous pulp, said mechanically working is carried out while applying a vacuum, said vacuum being in the range of 25 to 30 inches of mercury, and forming said pulp into a shaped product.

4,371,561

STEAROYL LACTYLATE SALT COMPOSITION HAVING IMPROVED PHYSICAL PROPERTIES AND METHOD OF PRODUCTION

Curtis J. Forsythe, Raytown, Mo., assignor to Top-Scor Products, Inc., Kansas City, Kans.

Continuation of Ser. No. 888,224, Mar. 20, 1978, Pat. No. 4,264,639. This application Feb. 9, 1981, Ser. No. 232,735

Int. Cl.[3] A21D *2/16*

U.S. Cl. 426—653 **24 Claims**

1. A composition of reduced hygroscopicity and increased melting point consisting essentially of:

(a) a stearoyl lactylate salt selected from the group consising of sodium stearoyl lactylate, calcium stearoyl lactylate, potassium stearoyl lactylate, and mixtures thereof and being within a range of about 98% to about 70% (by weight) of said composition; and

(b) an hydrogenated stearin within a range of about 2% to about 30% (by weight) of said composition; said stearin having an iodine value of less than about 7 and all fatty acid radicals on said stearin are in a range of about 50% to 100% (by weight of fatty acid) of at least C_{18} fatty acid; and wherein

(c) said stearin and said salt are mixed while said salt is in molten state.

14. A process for production of low hygroscopicity and high melting point stearoyl lactylate salt compositions consisting essentially of the steps of:

(a) manufacturing a stearoyl lactylate salt selected from the group consisting of sodium stearoyl lactylate, calcium stearoyl lactylate and mixtures thereof;

(b) adding hydrogenated stearin with an iodine value of less than about 7 to said salt, such that from about 2 to about 30 parts by weight of said stearin are added for each 70 to 98 parts by weight of said salt; wherein all fatty acid radicals on said stearin are in the range of 50% to 100% (by weight of fatty acid) of at least C_{18} fatty acid; and

(c) mixing together said stearin and said salt while said salt is in a molten state.

4,371,562

METHOD FOR IMPROVING THE FUNCTIONALITY OF PROTEIN MATERIALS

Herman H. Friedman, Forest Hills; Joseph Giacone, Purdy's; Charles J. Cante, Pleasantville, and John R. Frost, Beacon, all of N.Y., assignors to General Foods Corporation, White Plains, N.Y.

Continuation-in-part of Ser. No. 85,183, Oct. 16, 1979, abandoned. This application Jun. 8, 1981, Ser. No. 271,158

Int. Cl.[3] A23K *1/00*

U.S. Cl. 426—656 **8 Claims**

1. A method for improving the functionality of a protein material comprising the steps of:

(a) forming a non-solubilized, mixable, aqueous protein slurry composed of helical protein molecules, said slurry having greater than 20% solids concentration;

(b) mixing polyvinylpyrrolidone with said slurry, said mixing being effective to cause complete dispersion of said polyvinylpyrrolidone in said slurry;

(c) raising the pH of the slurry to within the alkaline range of from about 8 to about 14 and maintaining contact between the protein and the polyvinylpyrrolidone for a period of time effective to allow ingress of the polyvinylpyrrolidone internally in the helical protein molecules, and thereafter;

(d) reducing the pH of the slurry to the range of from about pH 5 to less than pH 8 in order to entrap a portion of the polyvinylpyrrolidone within the helical protein molecules.

4,371,563

FINE PARTICLE FILTER SYSTEM HAVING LOW PRESSURE DROP FOR GASEOUS FLOW SYSTEMS

Erich Muehlberger, San Clemente, Calif., assignor to Electro-Plasma, Inc., Irvine, Calif.

Continuation of Ser. No. 134,526, Mar. 27, 1980, abandoned. This application Jun. 24, 1981, Ser. No. 277,020

Int. Cl.[3] B05D *1/08*

U.S. Cl. 427—34 **15 Claims**

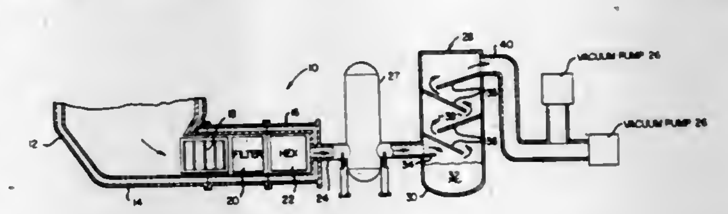

1. The method of separating a fine particulate from a gaseous flow stream comprising the steps of:

providing a gaseous flow stream having a fine particulate;

directing the gaseous flow stream onto the surface of an oil bath at a supersonic speed and in an environment having a pressure no greater than 0.6 atmospheres to introduce oil vapor and droplets into the flow stream and at the same time deposit some of the fine particulate in the oil bath; and

directing the flow stream containing particulate and oil vapor and droplets through a tortuous path having multiple stagnation regions such that the oil wets surfaces of the multiple stagnation regions along the path and the particulate is adherent to the oil that wets the surfaces when impinging thereon.

4,371,564

PRODUCTION OF POROUS DIAPHRAGM FOR ELECTROLYTIC CELL

John F. Cairns, Frodsham, England, assignor to Imperial Chemical Industries Limited, London, England

Filed May 19, 1981, Ser. No. 265,221

Claims priority, application United Kingdom, May 30, 1980, 8017687

Int. Cl.[3] B05D *3/06*

U.S. Cl. 427—35 **14 Claims**

1. A process for the production of a porous diaphragm suitable for use in an electrolytic cell characterised in that the process comprises irradiating a porous shaped article of an organic polymeric material with high energy radiation, the irradiation being effected in the presence of, or the irradiated shaped article being subsequently contacted with, a reactant selected from ammonia, carbon monoxide or phosgene.

4,371,565

PROCESS FOR ADHERING AN ORGANIC RESIN TO A SUBSTRATE BY MEANS OF PLASMA POLYMERIZED PHOSPHINES

Arnold I. Baise, Poughkeepsie, N.Y.; John M. Burns, Menlo Park, Calif., and Harbans S. Sachdev, Wappingers Falls, N.Y., assignors to International Business Machines Corporation, Armonk, N.Y.

Filed Sep. 4, 1981, Ser. No. 299,273

Int. Cl.[3] B05D *3/06*

U.S. Cl. 427—41 **5 Claims**

1. A process for increasing the adhesion of an organic resin material to a metal or silicon containing substrate, said process comprising the steps of:

(1) providing a vapor of an unsaturated organophosphine,

(2) introducing said organophosphine vapor into a reaction chamber,

(3) subjecting said organophosphine vapor to radio energy discharge, so as to deposit a film of polymerized organophosphine on said substrate, and

(4) applying a coating of an organic resin on top of said film of polymerized organophosphine.

4,371,566
ABRASION RESISTANT COATING COMPOSITION
Raymond J. Russell, Lincoln Park, N.J., assignor to Panelgraphic Corporation, West Caldwell, N.J.
Filed Sep. 10, 1980, Ser. No. 185,670
Int. Cl.^{3} B05D *3/06*
U.S. Cl. 427—53.1 **73 Claims**

1. A composition curable by actinic radiation to form an abrasion-resistant product comprising a pentaerythritol-based polyacrylate or polymethacrylate, a vinyl chloride-vinyl acetate containing polymer and a photoinitiator, wherein the weight ratio of said polyacrylate or polymethacrylate to said vinyl chloride-vinyl acetate containing polymer is from about 5 to 1 to about 20 to 1.

38. A method of providing an abrasion resistant coating on a substrate comprising:
(a) forming a composition curable by actinic radiation comprising a pentaerythritol-based polyacrylate or polymethacrylate, a vinyl chloride-vinyl acetate containing polymer and a photoinitiator wherein the weight ratio of said pentaerythritol-based polyacrylate or polymethacrylate to said vinyl chloride-vinyl acetate containing polymer is formed about 5 to 1 to about 20 to 1;
(b) applying said composition to said substrate; and
(c) irradiating said composition with actinic radiation to effect curing thereof.

4,371,567
HIGH COERCIVITY, COBALT-DOPED FERRIMAGNETIC IRON OXIDE PARTICULATES
Alex Chamard, La Courneuve; Patrick Dougier, Andresy, and Jean-Bruno Monteil, Paris, all of France, assignors to Rhone-Poulenc Industries, Paris, France
Filed Apr. 7, 1981, Ser. No. 251,770
Claims priority, application France, Apr. 28, 1980, 80 09498
Int. Cl.^{3} C01G *49/02*
U.S. Cl. 427—130 **8 Claims**

1. A process for the preparation of high coercivity, cobalt-doped ferrimagnetic iron oxide particulates, said particulates comprising ferrous iron, and which process comprises (i) thermally decomposing a β-diketone complex of cobalt having a decomposition temperature in the range of 300° to 500° C., and a sublimation point therebelow, onto fluidized iron oxide particles having the formula $(FeO)_xFe_2O_3$, wherein $0 \leq x \leq 1.5$, (ii) next, in an inert atmosphere, annealing the particulates which result at a temperature ranging from about 300° to 500° C. and then (iii) permitting the same to cool, while at the same time sweeping the cooling zone with an inert gas, and thence (iv) controllably re-oxidizing the annealed, cooled particles to effect formation of cobalt ferrite thereon, the cobalt being present in the form of Co^{+2}.

4,371,568
METHOD AND MEANS TO FILL OUT UNEVEN SURFACES, FOR EXAMPLE IN BLOCK BOARDS
Björn R. L. von Tell, Bergstigen 14, S-138 00 Älta, Sweden
Filed May 14, 1981, Ser. No. 263,771
Claims priority, application Sweden, May 23, 1980, 8003880
Int. Cl.^{3} B32B *35/00;* B05D *3/02, 3/12, 1/02*
U.S. Cl. 427—140 **11 Claims**

1. A method of filling cavities in an uneven surface of a wooden article to smooth said surface, which comprises the steps of
(a) applying a curtain of a fusible powder to said surface from an applicator in an amount in excess of the amount required to fill the cavities while vibrating the applicator at a relatively high frequency and subjecting the wooden article to vibration at a relatively low frequency,
(b) scraping the excess amount of the fusible powder from the surface to remove said excess amount of powder therefrom,
(c) supplying heat to the fusible powder remaining in the cavities until the powder has melted therein to form a molten filling thereof, and

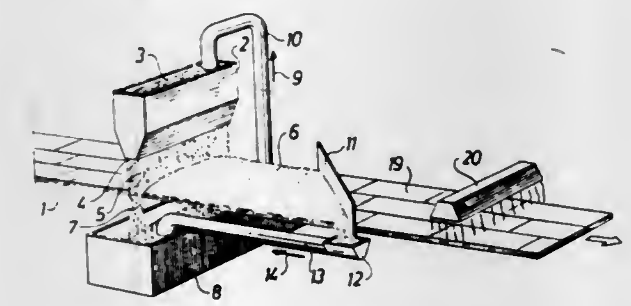

(d) discontinuing the supply of heat and permitting the molten filling to harden in the cavities whereby the cavities are permanently filled.

4,371,569
METHOD FOR REINFORCING AND REPAIRING PIPING
Natsuo Muta, Fukuoka-Ken, and Toshihisa Kanamaru, Fukuoka-Ken, both of Japan, assignors to Saibu Gas Co. Ltd. and Kabushiki Kaisha Kankyo Kaihatsu, both of Fukuoka, Japan
Division of Ser. No. 125,772, Feb. 29, 1980, Pat. No. 4,308,824. This application Sep. 29, 1981, Ser. No. 306,753
Claims priority, application Japan, Nov. 22, 1979, 54-151727
Int. Cl.^{3} B05L *7/08;* B05D *1/26*
U.S. Cl. 427—230 **3 Claims**

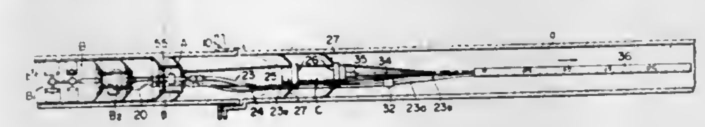

1. A method for reinforcing and repairing a pipe line, using a film forming device, a film adjusting device, and means for inspecting the inner surface of the pipe line, said method comprising:
(a) inserting said film forming device, said inspecting means, and said film adjusting device into a pipe line in spaced-apart relation;
(b) moving said film forming device, said pipe line inspecting device, and said film adjusting device through said pipe line along a predetermined direction of movement, whereby said inspecting means are disposed forwardly of said film forming means and said film adjusting means, as viewed in said direction of movement; said inspecting means thereby having a viewing angle directed rearwardly towards said film forming means;
(c) applying said film forming material to the inner surface of said pipe line;
(d) inspecting said inner surface to locate possible leakage portions of said pipe line while moving said devices by directing said inspection means rearwardly with respect to said direction of movement;
(e) stopping all of said devices when said film forming device is positioned adjacent one of said portions; and
(f) applying said material to said area to completely and securely seal such portions while said devices are stopped.

4,371,570
HOT CORROSION RESISTANT COATINGS
Joseph A. Goebel, Rocky Hill; Richard H. Barkalow, and Nicholas E. Ulion, both of Marlborough, all of Conn., assignors to United Technologies Corporation, Hartford, Conn.
Division of Ser. No. 120,248, Feb. 11, 1980, Pat. No. 4,326,011. This application Feb. 1, 1982, Ser. No. 344,412
Int. Cl.^{3} C23C *11/00*
U.S. Cl. 427—248.1 **4 Claims**

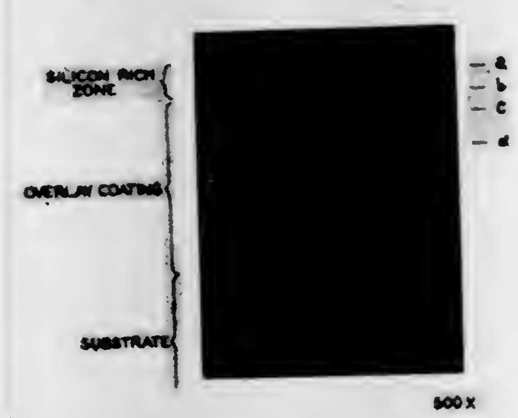

1. A method for providing a superalloy article with enhanced resistance to hot corrosion including the steps of:
a. providing the article with an overlay coating of a material selected from the group consisting of MCr, MCrAl, MCrAlY and MCrAlHf, where "M" is selected from the group consisting of Fe, Ni, Co, and mixtures thereof:
b. diffusing silicon into the overlay coating surface to produce a silicon rich surface zone having a thickness of from about 10 to about 40% of the total coating thickness which contains from about 20 to about 40% Si.

4,371,571
WIDE-BAND AND CONTINUOUS LINE ADHESIVE APPLICATOR AND METHOD FOR CIGARETTE FILTER ATTACHMENT AND THE LIKE
Donald B. McIntyre, and Frederic S. McIntyre, both of Wellesley, Mass., assignors to Acumeter Laboratories, Inc., Marlborough, Mass.
Division of Ser. No. 69,973, Aug. 27, 1979, Pat. No. 4,277,301. This application Oct. 20, 1980, Ser. No. 198,614
Int. Cl.^{3} B05D *1/42, 5/10*
U.S. Cl. 427—285 **3 Claims**

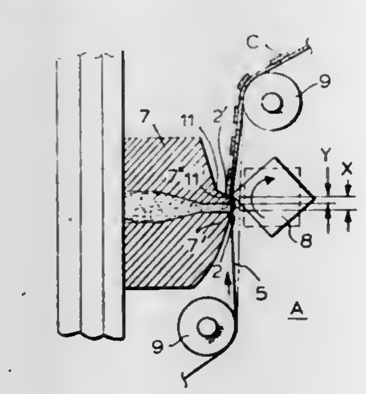

1. A method of fluid adhesive application, that comprises, extruding at a predetermined region a plurality of in-line closely spaced parallel beads of such adhesive transversely onto a web as the web is longitudinally drawn through said region; moving the extruded beads on the web to a shear edge spaced longitudinally from said region; periodically bumping the beads of said parallel-bead-coated web against said edge; and controlling the size of the beads and location of bumping relative to the speed of drawing of the web to cause the beads at said edge to spread into longitudinally intermittent bands of adhesive ranging from bands of parallel stripes to merged-uniform continuous coating bands.

4,371,572
PROCESS FOR THE TREATMENT OF WOOD
Bror O. Hager, Forsetevagen 5, S-182 63 Djursholm, Sweden
Filed Feb. 18, 1981, Ser. No. 235,753
Claims priority, application Sweden, Oct. 10, 1979, 7908379
Int. Cl.^{3} B05D *3/00, 3/02, 3/12*
U.S. Cl. 427—298 **11 Claims**

1. In a process for the coloring of untreated wood wherein said wood is contacted with a heated pigment-containing drying/coloring oil, the improvement comprising providing untreated wood wherein at least the outer surface layer of the wood has a moisture content in excess of the fiber saturation point of the wood and contacting the wood with a heated pigment-containing drying/coloring oil under temperature and pressure conditions sufficient to remove at least a portion of the moisture from said wood and cause said wood to become pigmented, said contacting being conducted for a period of time sufficient for the moisture content of all parts of said outer surface layer of the wood to decrease below the fiber saturation point of the wood; and removing the treated wood from contact with said oil.

2. The process of claim 1 wherein said contacting step occurs under a vacuum.

4,371,573
ELECTROLESS DEPOSITION OF NICKEL COATINGS AND DEPOSITING BATHS THEREFOR
Herbert Januschkowetz, and Hans Laub, both of Nuremberg, Fed. Rep. of Germany, assignors to Siemens Aktiengesellschaft, Munich, Fed. Rep. of Germany
Filed Nov. 18, 1981, Ser. No. 322,547
Claims priority, application Fed. Rep. of Germany, Dec. 30, 1980, 3049417
Int. Cl.^{3} C23C *3/02*
U.S. Cl. 427—438 **5 Claims**

1. A depositing bath for the electroless deposition of nickel on surfaces of metal and metal alloys comprising an aqueous solution containing (a) from about 10 to about 50 g/l of a flourine-containing nickel compound; (b) from about 40 to about 200 g/l diammonium hydrogen citrate; (c) from about 20 to about 100 g/l ammonium hydrogen difluoride; (d) from about 5 to about 50 g/l 2-hydroxy-4-methyl-benzoic acid; (e) from about 0.0005 to about 0.05 g/l copper salt; and (f) from about 10 to about 100 g/l sodium hypophosphite.

4,371,574
ENCLOSURE MEMBER SUBSTANTIALLY IMPERMEABLE TO THE TRANSMISSION OF SOLVENTS AND FUELS
Roger A. Shefford, Aldershot, Great Britain, assignor to Koninklijke Emballage Industrie Van Leer B.V., Amstelveen, Netherlands
Filed Dec. 5, 1980, Ser. No. 213,668
Claims priority, application United Kingdom, Feb. 12, 1980, 8004570
Int. Cl.^{3} B65D *23/00;* B05D *3/00*
U.S. Cl. 428—35 **5 Claims**

1. An enclosure member consisting essentially of solid, non-aromatic polymers that have a linear carbon to carbon backbone structure and have a plurality of free hydrogen atoms attached to the carbon atoms with a permeability to wet solvents and fuels of less than 1/50 of the permeability of untreated enclosure members having a thickness of 1 mm, the enclosure having an inner and outer surface, at least the inner surface having a portion of the hydrogen atoms replaced by

sulphonic acid or sulphonate groups and being coated with a cured layer having a thickness of from 2 to 50 micrometers of

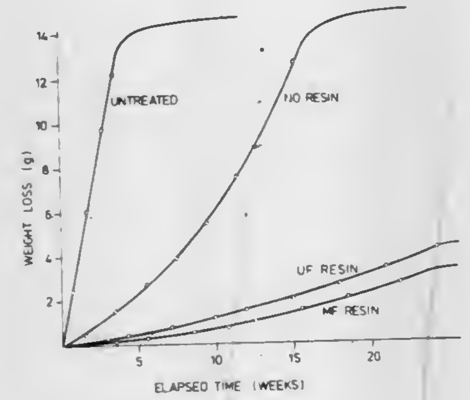

condensation products selected from the group consisting of formaldehyde and melamine or formaldehyde and urea.

4,371,575

RIGID, ONE-PIECE, BIAXIALLY STRETCHED SHAPED BODY OF SYNTHETIC RESIN AND METHOD FOR MAKING THE SAME

Klaus Kerk, Griesheim; Dieter Mueller, Pfungstadt, and Bernd Oleiko, Duisberg-Baerl, all of Fed. Rep. of Germany, assignors to Röhm GmbH, Darmstadt, Fed. Rep. of Germany

PCT No. PCT/EP80/00125, § 371 Date May 18, 1981, § 102(e) Date May 18, 1981, PCT Pub. No. WO81/01304, PCT Pub. Date May 14, 1981

PCT Filed Nov. 4, 1980, Ser. No. 264,300

Claims priority, application Fed. Rep. of Germany, Nov. 5, 1979, 7931201[U]

Int. Cl.³ B29C *17/04, 25/00*

U.S. Cl. 428—81 **8 Claims**

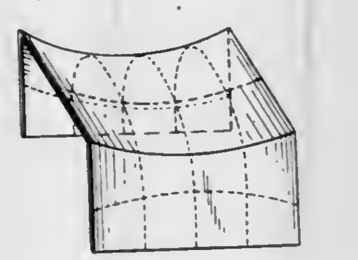

1. A method for making a rigid one-piece shaped body of biaxially stretched synthetic resin in the form of a sheet having a thickness of at least 1 millimeter, said body having an edge which does not lie in one plane and having a surface smaller than the imagined flat initial surface enclosed by said edge, which method comprises deforming a sheet of biaxially stretched synthetic resin at least 1 millimeter thick by elastic bending at a temperature below the softening point of the resin into a configuration in which the edge of the sheet does not lie in a single plane, rigidly fixing the edge of the sheet, and heating said sheet without touching the surface thereof and with equal gas pressure on both sides of the sheet until said synthetic resin is in the thermoelastic state, whereby the surface of the sheet enclosed by the edge shrinks back partially but shrinkage of the edge of the sheet is not permitted, and subsequently cooling the sheet below the softening temperature of the synthetic resin.

4,371,576

HOT MELT ADHESIVE BONDED PILE FABRICS

Greville Machell, Spartanburg, S.C., assignor to Milliken Research Corporation, Spartanburg, S.C.

Filed Sep. 22, 1981, Ser. No. 304,486

Int. Cl.³ D04H *11/08*

U.S. Cl. 428—92 **5 Claims**

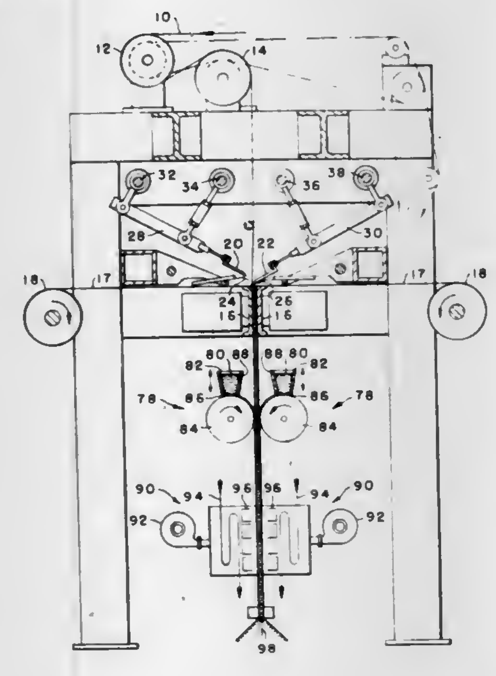

1. A hot melt adhesive bonded pile fabric which comprises a liquid-permeable base layer, a pile forming yarn adjacent to but not tufted through the base layer in pile forming fashion, the pile forming yarn having been bonded to the base layer by means of a hot melt adhesive applied to the back of said base layer and forced through the base layer into contact with said pile forming yarn.

4,371,577

ANTIMICROBIAL CARPET CONTAINING AMINO ACID TYPE SURFACTANT

Minoru Sato, Gifu; Yoshiteru Hirose, Kamakura, and Shigeshi Toyoshima, Funabashi, all of Japan, assignors to Mitsubishi Burlington Co., Ltd.; Ajinomoto Co., Ltd. and Mitsui & Co., Ltd., all of Tokyo, Japan

Filed Apr. 27, 1982, Ser. No. 372,139

Claims priority, application Japan, May 22, 1981, 56-76755

Int. Cl.³ B32B *3/02, 33/00*

U.S. Cl. 428—96 **11 Claims**

1. An antimicrobial carpet, comprising an amino acid type surfactant represented by the formula:

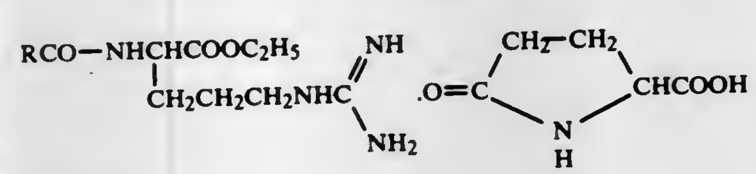

wherein RCO is a C_8–C_{16} fatty acid residue, attached on a fibrous material constituting said carpet.

4,371,578

HEAT SHRINKABLE MATERIAL FOR WRAPPING AROUND A PIPE, CABLE OR THE LIKE

Roy F. Thompson, Farnborough Park, England, assignor to A. C. Egerton Limited, Kent, England

Filed Jul. 25, 1980, Ser. No. 172,457

Claims priority, application United Kingdom, Jul. 27, 1979, 7926219; Dec. 7, 1979, 7942237; May 2, 1980, 8014718

Int. Cl.³ B32B *3/02;* **F16L** *55/16*

U.S. Cl. 428—192 **14 Claims**

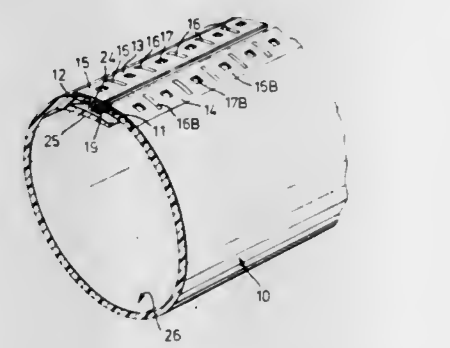

1. Material for wrapping around a pipe, cable or the like, comprising a flexible sheet of material, first and second opposite edges of said material, said material being heat-shrinkable in a direction between first and second opposite edges, a first clip element secured on said first edge and a second clip element secured on said second edge, the first and second clip elements each comprising a body portion secured to the flexible sheet and a hook member extending from said body portion away from the associated edge, the hook members of the two clip elements being bent in opposite senses and being inclined towards the associated body portion, whereby the hook elements are inter-engageable to hold said first and second edges in proximity and means to maintain said clip elements in inter-engagement.

4,371,579

FIRE-RESISTANT FILLER SHEET LAMINATES

Harold O. McCaskey, Allendale, and Melvin E. Benson, Varnville, both of S.C., assignors to Westinghouse Electric Corp., Pittsburgh, Pa.

Filed Oct. 9, 1980, Ser. No. 195,550

Int. Cl.³ B32B *5/16, 5/28, 5/30*

U.S. Cl. 428—204 **7 Claims**

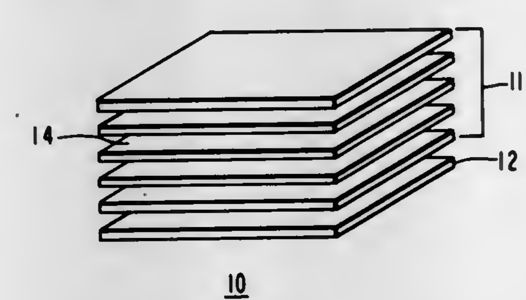

1. A fire-resistant laminate comprising a plurality of thermoset resin impregnated filler sheets, the filler sheets before resin impregnation consisting of from about 60 wt. % to about 90 wt. % inorganic filler selected from the group consisting of aluminum trihydrate, magnesium silicate, magnesium hydroxide, magnesium carbonate, calcium silicate, calcium carbonate, mica, silica, and mixtures thereof, from about 5% up to about 25 wt. % cellulose fibers and from about 0.5 wt. % to about 20 wt. % resinous binder, the plurality of thermoset resin impregnated filler sheets being heat and pressure consolidated and bonded together into a unitary member, and having a resin ratio of from about 1.20 to about 4.0.

4,371,580

THREE-PLY BELTING MATERIAL

Donald Morrison, Harper, and William T. Muma, Jr., Anthony, both of Kans., assignors to Morrison Company, Inc., Anthony, Kans.

Filed Jan. 26, 1982, Ser. No. 342,812

Int. Cl.³ B32B *7/00*

U.S. Cl. 428—250 **13 Claims**

1. Three-ply belting material, comprising:

a center ply comprising a first synthetic fabric;

first and second outer plies which are disposed in spaced relationship to the center ply on opposite sides of the center ply, each outer ply comprising a second synthetic fabric, the second synthetic fabric having a flex fatique life and a modulus which are respectively greater than the flex fatique life and modulus of the first synthetic fabric;

a first rubber skim, which is interposed between the center ply and the first outer ply and which is bonded to the center ply and the first outer ply;

a second rubber skim which is interposed between the center ply and the second outer ply and which is bonded to the center ply and the second outer ply, the thicknesses of the first and second rubber skims being substantially the same; and

first and second rubber covers which are bonded to the first and second outer plies, respectively.

4,371,581

SOUND ABSORBER

Fusaoki Uchikawa, Kamakura; Hideharu Tanaka; Mutsuo Sekiya, both of Amagasaki, and Yasufumi Ohata, Tokyo, all of Japan, assignors to Mitsubishi Denki Kabushiki Kaisha, Tokyo, Japan

Filed Sep. 9, 1981, Ser. No. 300,519

Claims priority, application Japan, Mar. 17, 1981, 56-41386; Mar. 24, 1981, 56-43455

Int. Cl.³ B32B *5/16*

U.S. Cl. 428—304.4 **9 Claims**

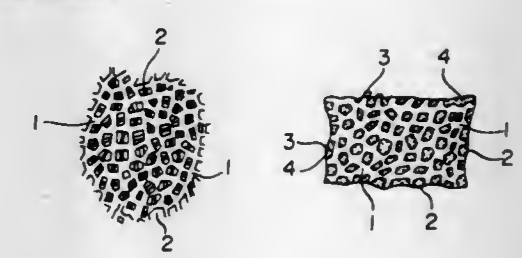

1. A sound absorber which comprises a layer of a composition of a heat resistant binder and a low temperature oxidizing catalyst which is coated on a porous metal substrate in the hardened form.

4,371,582
INK JET RECORDING SHEET

Masatoshi Sugiyama; Ichiro Nakanishi; Akira Ogawa, all of Minami-ashigara, and Masakazu Maekawa, Fujinomiya, all of Japan, assignors to Fuji Photo Film Co., Ltd., Kanagawa, Japan

Filed Aug. 12, 1981, Ser. No. 292,068
Claims priority, application Japan, Aug. 14, 1980, 55/112083
Int. Cl.³ B32B *27/10;* **G01D** *15/34*
U.S. Cl. 428—341 **13 Claims**

1. An ink jet recording sheet for forming a recorded image by jetting thereonto an aqueous ink containing as a water-soluble dye a direct dye or acid dye having an anionic dissociable group, comprising at least one water insoluble basic latex polymer incorporated in or on a base support.

8. An ink jet recording sheet as in claim 1, 2, or 3, wherein the content of the water insoluble basic latex polymer is from 0.1 to 20 g/m² of the support.

4,371,583
MODIFIED IONOMER BLEND AND LAMINATED ARTICLE

Wayne F. Nelson, Akron, Ohio, assignor to A. Schulman, Inc., Akron, Ohio

Filed May 4, 1981, Ser. No. 260,180
Int. Cl.³ B32B *15/08, 27/20, 27/28*
U.S. Cl. 428—358 **10 Claims**

1. A metal trim having a tough, non-glossy adherent coating comprised of a modified ionomer blend of (1) about 20 to 60 percent of an ethylene-propylene rubber, in which ethylene is the predominant component, (2) about 40 to 80 percent of a copolymer containing ethylene units and carboxylic acid containing units, said copolymer containing between about 25 and 98.5 percent ethylene units and between about 1.5 and 30 percent carboxylic acid containing units, and said carboxylic acid units being from 10 to 100 percent neutralized with metallic ions, and (3) an effective amount up to about 10 percent of an ultraviolet stabilizing coloring material selected from the group consisting of

(1) carbon black, and
(2) a pigment plus an ultraviolet stabilizer, with or without an antioxidant, said coating and said trim having substantial area of flat surface-to-surface contact and said coating being adhered thereto by the inherent adhesive character of said blend.

4,371,584
AQUEOUS TREATING COMPOSITION FOR GLASS FIBER YARNS AND TREATED YARNS

Dennis M. Fahey, Lexington, N.C., assignor to PPG Industries, Inc., Pittsburgh, Pa.

Filed Dec. 4, 1980, Ser. No. 212,913
Int. Cl.³ B32B *9/00;* **D02G** *3/00*
U.S. Cl. 428—392 **11 Claims**

1. Bulked glass fiber strand yarn, wherein the glass fiber strands have the dried residue of a film former and lubricant, where the yarn additionally has the dried residue of an aqueous treating composition, comprising:

a. solid, thermoplastic, alkali soluble, carboxylated, polymer selected from acrylics, polyesters, polyvinylacetates, polyvinylesters, and their copolymers and styrene butadiene, where the polymers and copolymers have carboxylation in an amount at least about 3 weight percent of the polymer and copolymer and where the polymer and copolymer is present in the aqueous composition in an amount in the range of about 1 to about 15 weight percent of the aqueous treating composition,
b. plasticizing material selected from internal, external and polymeric plasticizers in an amount in the range of about 0 to 10 weight percent of the aqueous treating composition,
c. alkali material selected from ammonia, alkali metal and alkaline earth metal hydroxides, amides and amines in an amount to give a pH of the aqueous treating composition in the range of about 7 to about 10 to solubilize the alkali soluble thermoplastic polymer,
d. liquid lubricating materials selected from the group consisting of polyalkylene polyols, polyalkoxylated fatty acids, polyalkoxylated fatty acid esters and mixtures thereof having a viscosity of at least 100 centistokes present in an amount in the range of about 0.5 to about 4 weight percent of the aqueous treating composition, and
e. water in an amount to give a percent total solids for the composition in the range of about 1 to about 25 weight percent.

4,371,585
PROCESS FOR APPLYING A SILICONE OR SILOXANE-BASED ABRASION RESISTANT COATING TO A POLYCARBONATE SUBSTRATE, AND COATED ARTICLES

Nazir A. Memon, Fallsington, Pa., assignor to Rohm and Haas Company, Philadelphia, Pa.

Continuation of Ser. No. 822,763, Aug. 8, 1977, abandoned. This application Aug. 13, 1979, Ser. No. 65,795
Int. Cl.³ A02B *1/10, 1/04;* **B05B** *1/38;* **B32B** *27/08*
U.S. Cl. 428—412 **4 Claims**

1. A process for applying and adhering a silicone or siloxane based abrasion-resistant coating to a polycarbonate substrate comprising applying a tie coating composition comprising a thermoplastic polymer of an alkyl methacrylate or a thermoplastic copolymer polymerized from a monomer mixture consisting essentially of at least 50 weight percent of at least one alkyl methacrylate or a mixture of such polymers and a flow improver dissolved in one or more organic solvents and drying at a temperature of about 20° to 30° C. prior to applying said abrasion-resistant coating.

4,371,586
PLASTICIZERS FOR POLYVINYL BUTYRAL

Daniel Dages, Les Mureaux, France, assignor to Saint-Gobain Vitrage, Neuilly sur Seine, France

Filed Aug. 19, 1981, Ser. No. 294,415
Claims priority, application France, Sep. 1, 1980, 80 18862
Int. Cl.³ B32B *17/10, 27/42*
U.S. Cl. 428—437 **19 Claims**

1. A method for plasticizing polyvinyl butyral which comprises admixing polyvinyl butyral with a plasticizer mixture of:

(a) at least one alkyl alkylaryl adipate having the general formula:

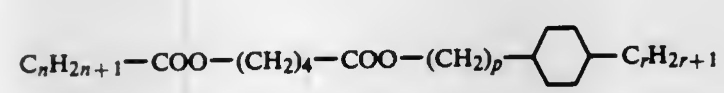

wherein n is greater than or equal to 1 and the sum of p+r is greater than or equal to 1; and
(b) at least one dialkyl adipate in which the alkyl group contains from 3 to 8 carbon atoms,

wherein the alkyl alkylaryl adipate comprises between about 50 and 80% by weight of the total plasticizer mixture.

4,371,587
LOW TEMPERATURE PROCESS FOR DEPOSITING OXIDE LAYERS BY PHOTOCHEMICAL VAPOR DEPOSITION

John W. Peters, Malibu, Calif., assignor to Hughes Aircraft Company, Culver City, Calif.

Continuation of Ser. No. 104,323, Dec. 17, 1979, abandoned. This application Mar. 26, 1981, Ser. No. 247,571
Int. Cl.³ B32B *9/04, 13/04*
U.S. Cl. 428—446 **39 Claims**

6. A process for depositing a layer of an oxide of a chosen

material on the surface of a selected substrate by chemical vapor deposition comprising the steps of:

(a) providing said substrate; and
(b) exposing said substrate to a selected vapor phase reactant in the presence of photochemically generated neutral oxygen atoms, said neutral oxygen atoms being formed by the mercury photosensitized dissociation of a chosen

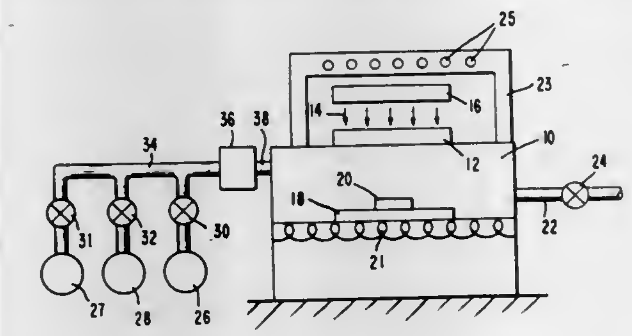

chemically unreactive oxygen-containing precursor, whereby said neutral oxygen atoms react with said vapor phase reactant to form said oxide which deposits as said layer on said substrate and said neutral oxygen atoms are formed in a manner which avoids damage to said substrate due to charge bombardment or radiation bombardment of said substrate.

4,371,588
ELECTRICAL INSULATING MATERIAL WITH HERMETIC SEAL

James C. Kyle, 24372 Via San Clemente, Mission Viejo, Calif. 92692

Filed Dec. 8, 1980, Ser. No. 214,256
Int. Cl.³ B32B *9/04*
U.S. Cl. 428—448 **22 Claims**

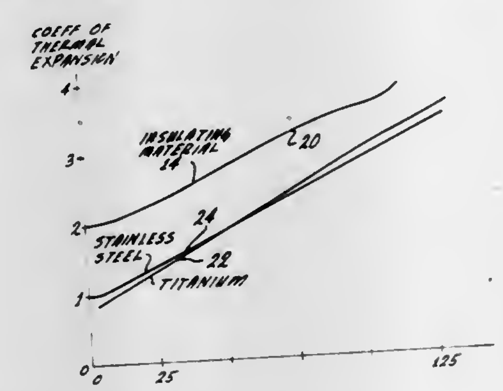

1. In combination for providing a hermetic seal,

a member made from a material selected from titanium alloys, titanium, Inconel and stainless steel in the 300 series and having a coefficient of thermal expansion which changes at a particular rate with changes in temperature from ambient temperatures to a temperature of approximately 1500° F.,

a ceramic material hermetically sealed to the member throughout the range of temperatures between ambient temperatures and temperatures of approximately 1500° F. and having insulating properties throughout the range of temperatures between ambient temperatures and temperatures of approximately 1500° F. and having a coefficient of thermal expansion which changes throughout an extended range of temperatures from ambient temperatures to a temperature of approximately 1500° F. at a rate substantially corresponding to the changes in the coefficient of thermal expansion of the member throughout such range.

4,371,589
PROCESS FOR DEPOSITING PROTECTIVE COATING AND ARTICLES PRODUCED

Joshua B. Warner, Spartanburg, and James S. Wolf, Clemson, both of S.C., assignors to Warner London Inc., Spartanburg, S.C.

Continuation of Ser. No. 717,394, Aug. 24, 1976, abandoned. This application Apr. 20, 1979, Ser. No. 31,797
Int. Cl.³ B22F *7/04*
U.S. Cl. 428—553 **30 Claims**

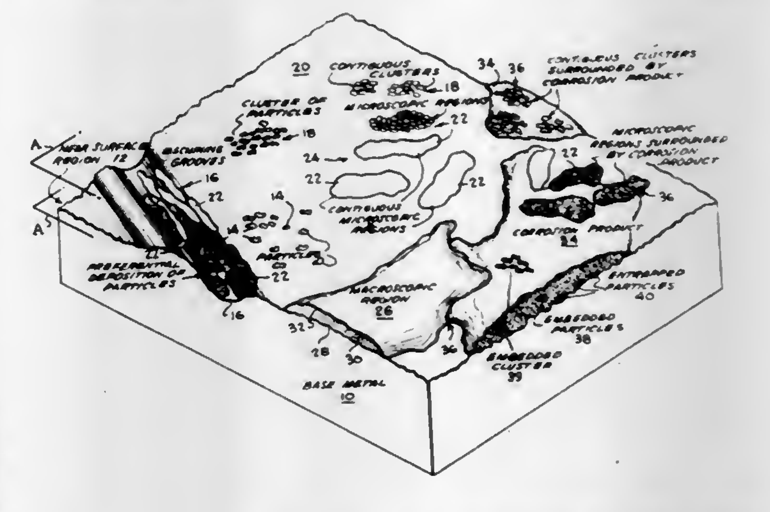

1. An article of relatively low wear-resistant base metal coated with a refractory metal comprising:

a base metal of relatively low wear resistance,
a near-surface region of said base metal,
a refractory metal having a melting point of at least 1490° C. deposited within said near-surface region and being adherent to said base metal,
said refractory metal being deposited as discrete particles,
a plurality of said particles being contiguous to form clusters and,
said clusters of said particles of refractory metal being spaced from each other to form an adherent wear-resistant discontinuous coating of said discrete particles of refractory metal on said base metal.

4,371,590
MAGNETIC RECORDING MEDIUM WITH STEPWISE ORIENTATION OF DEPOSITED METALLIC PARTICLES

Toshiaki Izumi; Seitoku Saito; Fumio Maruta, and Minoru Kameya, all of Tokyo, Japan, assignors to TDK Electronics Co., Ltd., Tokyo, Japan

Filed Dec. 5, 1980, Ser. No. 213,357
Claims priority, application Japan, Mar. 25, 1980, 55-38585
Int. Cl.³ B32B *15/18;* **H01F** *1/16*
U.S. Cl. 428—555 **5 Claims**

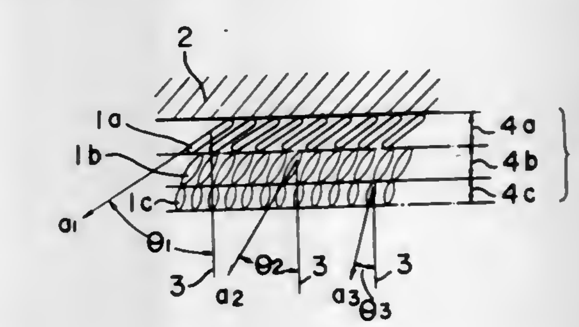

1. A magnetic recording medium comprising two or more thin metallic layers on a substrate, said layers having deposited thereon metallic particles whose angle of orientation varies stepwise between said layers to provide a substantially constant coercive force while residual magnetic flux increases in substantial proportion to the number of said thin metallic layers.

4,371,591
MANIFOLD VENTED BATTERY COVER
Terry R. Oxenreider, Wernersville, and Herbert A. Bush, Jr., Kenhorst, both of Pa., assignors to General Battery Corporation, Reading, Pa.
Continuation of Ser. No. 146,577, May 5, 1980, Pat. No. 4,278,742. This application Dec. 29, 1980, Ser. No. 221,088
The portion of the term of this patent subsequent to Jul. 14, 1998, has been disclaimed.
Int. Cl.³ H01M *2/12*
U.S. Cl. 429—88 **3 Claims**

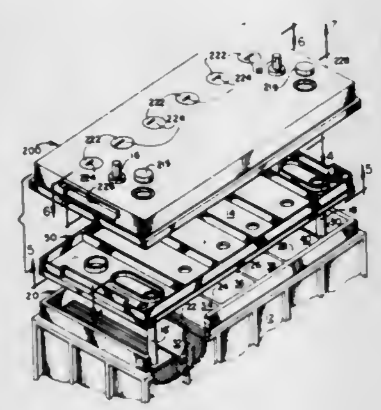

1. A manifold cover for use with a battery case having upstanding partitions forming a plurality of cell compartments and an equal plurality of plate packets one in each of said cell compartments to provide a lead acid storage battery, said manifold cover comprising:
- an inner member for engaging said battery case and said upstanding partitions to define a plurality of substantially closed cells, each of said cells having a vent port which depends from said inner member into said cell,
- electrical terminals, each of said terminals comprising a male portion, an intermediate portion and a female portion, said female portion dimensioned to receive a terminal post normally associated with the end cell battery plate packets, and
- an outer member dimensioned to fit over and about said inner member and assembled thereto to define a manifold portion therebetween, said outer member having an electrolyte fill port for each of the respective cells, said electrolyte fill port extending from the upper surface of said outer member through said manifold portion and said lower member and into said cell, said outer member having one of said electrical terminals positioned at each of the end cells of said battery case, said male portion of said terminal extending through said outer member, said intermediate portion of said terminal and said female portions positioned within said manifold portion.

4,371,592
PRIMARY CELL OF HIGH ENERGY DENSITY IN WHICH THE ANODE ACTIVE MATERIAL IS AN ALKALI METAL
Jean-Paul Gabano, Poitiers, France, assignor to Gipelec, Levallois-Perret, France
Filed Mar. 16, 1981, Ser. No. 243,796
Claims priority, application France, Mar. 28, 1980, 80 07077; Dec. 30, 1980, 80 27802
Int. Cl.³ H01M *4/58*
U.S. Cl. 429—91 **9 Claims**

1. A cell of high specific energy in which the anode active material is an alkali metal and the cathode active material is sulphur oxychloride which simultaneously acts as an electrolyte solvent, said electrolyte further containing a dissolved salt and a co-solvent whose reduction potential relative to said alkali metal is less than the reduction potential of sulphur dioxide, wherein the proportions (by volume) of the co-solvent relative to the solvent and co-solvent mixture lie between 32% and 43%, so as to obtain, in the discharge curves (voltage as a function of the discharge capacity) a second perceptible dis-

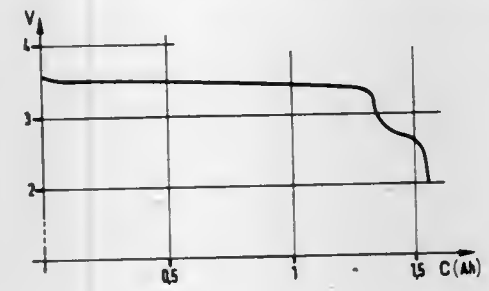

charge plateau at the level of the reduction potential of sulphur dioxide.

4,371,593
PRESSURE ENERGIZED PORTABLE POWER SOURCE, AND APPARATUS INCORPORATING SAME
Carol Ramey, 6536 Vista Del Mar, Playa del Rey, Calif. 90291
Filed May 29, 1981, Ser. No. 268,277
Int. Cl.³ H01M *2/10*
U.S. Cl. 429—97 **15 Claims**

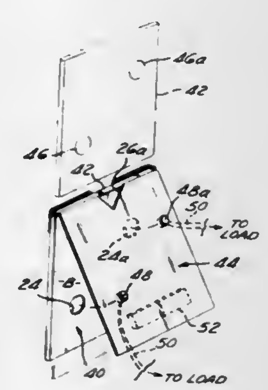

1. In combination, a battery holder and pressure-sensitive switch plate which comprises:
- a battery holder formed from an initially flat, thin, flexibly resilient, unitary sheet of electrically non-conductive material, provided with a first set of foldline means which when bent along said fold lines in a predetermined manner and affixed in place, forms said battery holder;
- a flexibly resilient tab member, formed from said initially flat, thin, unitary sheet of non-conductive material, and integrally affixed to said battery holder;
- a second foldline means, said tab member when bent about said second foldline means in a predetermined manner, forming an integrally hinged, flexibly resilient, switch plate;
- a third electrical interconnection means provided in said unitary sheet defining said battery holder, said third means permiting electrically interconnection of the positive and negative terminals of a battery adapted to be mounted within said battery holder; and
- electrically conductive terminal means provided on said integrally hinged switch plate, said terminal means being adapted to electrically contact at least one of said positive and negative terminals of the said battery when said switch plate and said battery holder are placed under relative compressive force, the said electrically conductive terminal means on said integrally hinged switch plate being normally spaced from at least one of said positive and negative terminals of said battery.

4,371,594
BATTERY ACCOMMODATING DEVICE
Tsunemasa Ohara, Tokyo, and Masayoshi Yamamichi, Kawasaki, both of Japan, assignors to Canon Kabushiki Kaisha, Tokyo, Japan
Filed Sep. 29, 1981, Ser. No. 306,770
Claims priority, application Japan, Oct. 3, 1980, 55-141809[U]; Oct. 3, 1980, 55-141810[U]
Int. Cl.³ H01M *2/10*
U.S. Cl. 429—97 **5 Claims**

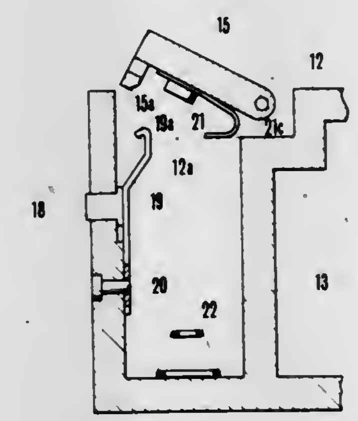

1. In a battery accommodating device having a chamber in which a plurality of cylindrical batteries are positioned in side-by-side relation to each other and a cover pivotally supported and arranged to close an opening portion of said chamber, the improvement comprising:
- (a) a lock member for locking said cover in the closed position, said lock member being provided in a space surrounded by the side walls of the cylindrical batteries when loaded in said chamber and an inside wall of said chamber; and
- (b) an operating member for operating said lock member from the outside of said battery chamber.

4,371,595
BATTERY CONTAINING MECHANISM OF A COMPACT ELECTRONIC INSTRUMENT
Kaname Suwa, Yokohama, Japan, assignor to Canon Kabushiki Kaisha, Tokyo, Japan
Filed Dec. 11, 1981, Ser. No. 330,016
Claims priority, application Japan, Dec. 19, 1980, 55/180237
Int. Cl.³ H01M *2/10*
U.S. Cl. 429—98 **10 Claims**

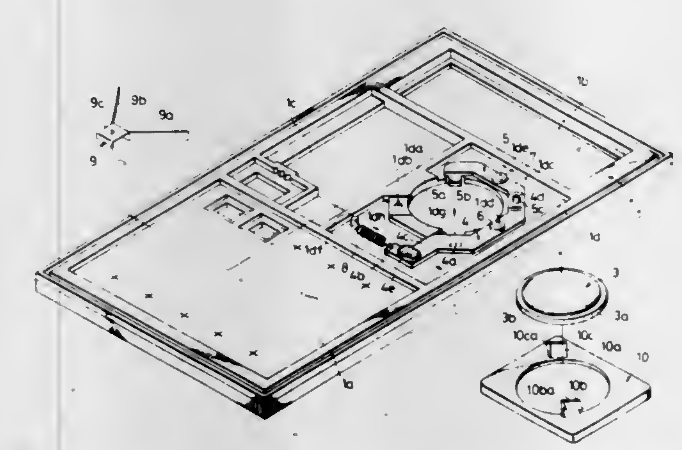

1. A battery containing mechanism of a compact electronic instrument comprising:
- a battery containing chamber provided with an opening for inserting a battery therethrough and provided with a contact for connection with an electrode of the battery;
- a pivotable member pivotably held on a side of the opening of said battery containing chamber and biased in a predetermined direction by a spring member; and
- a battery lid restrained by said pivotable member to close the opening of said battery containing chamber and to fix the battery in said battery containing chamber.

4,371,596
ADVANCED INORGANIC SEPARATORS FOR ALKALINE BATTERIES AND METHOD OF MAKING THE SAME
Dean W. Sheibley, Sandusky, Ohio, assignor to The United States of America as represented by the Administrator of the National Aeronautics and Space Administration, Washington, D.C.
Division of Ser. No. 238,790, Feb. 27, 1981, Pat. No. 4,331,746. This application Dec. 22, 1981, Ser. No. 333,537
Int. Cl.³ H01M *2/16*
U.S. Cl. 429—144 **8 Claims**

1. A method of making a flexible, porous separator for an alkaline EMF cell comprising mixing a binder, a polar organic plasticizer, polar filler particles, and an organic solvent to coat the filler particles with said plasticizer so that there is substantially no particle-to-particle contact, wherein said binder is a non-polar thermoplastic rubber-based resin which is soluble in said organic solvent but which is insoluble and unreactive in the alkaline electrolyte, said plasticizer is reactive with the alkaline electrolyte to produce a reaction product which contains a hydroxyl group and/or a carboxylic group, and said filler particles are unreactive with said electrolyte and consist essentially of between about 5% to 15% by weight of at least one first filler material having a surface area of greater than 25 meters²/gram, between about 60% to 95% by weight of at least one second filler material having a surface area of 10 to 25 meters²/gram, and between 0% to 23% by weight of at least one third filler material having a surface area of less than 10 meters²/gram, said weight percentages being based upon the total weight of the fillers and the weight percentages adding up to 100%, coating said mixture on a porous flexible non-metallic substrate and drying said coating.

8. The separator formed by the method of claim 1.

4,371,597
LAYER-BUILT CELL
Hironosuke Ikeda, Hirakata; Satoshi Narukawa, and Shigehiro Nakaido, both of Kobe, all of Japan, assignors to Sanyo Electric Co., Ltd., Moriguchi, Japan
Filed Jan. 26, 1981, Ser. No. 228,685
Claims priority, application Japan, Jan. 31, 1980, 55-11073
Int. Cl.³ H01M *2/24*
U.S. Cl. 429—153 **4 Claims**

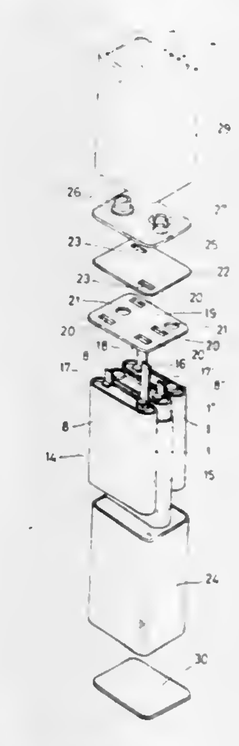

1. A layer-built cell comprising:

a cell assembly formed by putting together a plurality of elemental cells each having thereon a positive terminal and a negative terminal such that said terminals of said plurality of elemental cells are located on the same plane;
a first insulating plate disposed on said cell assembly and having therein a plurality of through-bores;
connecting pieces passing through said through-bores of said first insulating plate and over the surface thereof to connect the positive and negative terminals of said plurality of elemental cells electrically in series;
a second insulating plate disposed above said connecting pieces and having two through-bores;
a positive and a negative lead piece each connected to and extending from a respective positive and negative terminal of a cell of the assembly and passing through said through-bores in said first insulating plate and said through-bores in said second insulating plate; and
a terminal plate disposed above said second insulating plate and having thereon a positive external terminal connected to said positive lead piece and a negative external terminal connected to said negative lead piece.

4,371,598
METHOD FOR FABRICATING ALIGNED PATTERNS ON THE OPPOSED SURFACES OF A TRANSPARENT SUBSTRATE

John W. Medernach, Albuquerque, N. Mex.; Ivan A. Novak, Glen Ellyn, and Harry D. Bush, Palatine, both of Ill., assignors to Motorola, Inc., Schaumburg, Ill.

Filed Jul. 6, 1981, Ser. No. 280,593
Int. Cl.³ C03C *5/00*

U.S. Cl. 430—22 **4 Claims**

1. A method for fabricating selected aligned metallic electrode patterns on the upper and lower surfaces of a substantially transparent substrate comprising the steps of:
A. Situating an opaque metallic electrode material having a selected pattern on the upper surface of said substrate;
B. Coating the lower surface of said substrate with photoresist;
C. Exposing the upper surface of said substrate to collimated light so as to expose through said substrate the portions of the photoresist on the lower surface which remained unshielded by said opaque metallic electrode material on said upper surface;
D. Removing the portions of the photoresist on said lower surface which was unexposed to light through the substrate;
E. Coating said lower surface with a layer of selected metallic electrode material, and
F. Removing the remaining portions of photoresist on said lower surface to form a selected pattern of selected metallic electrode material on said lower surface substantially vertically aligned with the selected pattern of opaque metallic electrode material on said upper surface.

4,371,599
PROCESS FOR THE PREPARATION OF PRINTING FORMS AND/OR METALLIZED IMAGES

Erwin Lind, Auringen, and Ilse Bader, Wiesbaden, both of Fed. Rep. of Germany, assignors to Hoechst Aktiengesellschaft, Fed. Rep. of Germany

Filed Dec. 14, 1976, Ser. No. 750,434
Claims priority, application Fed. Rep. of Germany, Dec. 15, 1975, 2556386
Int. Cl.³ G03F *7/10;* **G03G** *13/32*

U.S. Cl. 430—49 **6 Claims**

1. In the process for the preparation of printing forms and/or metalized images by electrostatic charging, exposing, and treating with a toner of a photoconductor layer applied to an electrically conductive support material, and removing the photoconductor layer in the non-image areas, said toner having no adhesive properties or only slight adhesive properties relative to a receiving material, the improvement which comprises effecting removal of the toner-free photoconductor layer only by transferring it, under pressure, in the absence of a solvent and at a temperature in the range of about 50° to 250° C. to a receiving material which has a greater surface adhesion to the photoconductor layer than does the electrically conductive support material.

4,371,600
RELEASE OVERCOAT FOR PHOTORESPONSIVE DEVICE

Richard L. Schank, Webster, and Dana G. Marsh, Rochester, both of N.Y., assignors to Xerox Corporation, Stamford, Conn.

Filed Jun. 26, 1981, Ser. No. 278,512
Int. Cl.³ G03G *5/04, 5/07*

U.S. Cl. 430—56 **9 Claims**

1. An overcoated photoresponsive device comprised of a substrate, overcoated with a transport layer, which in turn is overcoated with a photogenerating layer containing therein as a release material a cross-linked silicone polymer of the formula:

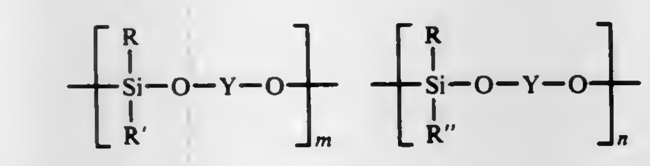

wherein R and R′ are independently selected from the group consisting of alkyl, substituted alkyl, aryl, and substituted aryl, R″ is selected from the group consisting of alkenes and substituted alkenes, Y is a dihydroxy radical, and m and n are numbers of sufficient value so as to result in a polymer having a molecular weight of from about 2,000 to about 250,000.

4,371,601
POSITIVELY CHARGED DEVELOPER COMPOSITIONS CONTAINING TELOMERIC AMINES

Roger N. Ciccarelli, Rochester, N.Y., assignor to Xerox Corporation, Stamford, Conn.

Filed May 1, 1981, Ser. No. 259,640
Int. Cl.³ G03G *9/16*

U.S. Cl. 430—110 **16 Claims**

1. A positively charged dry developer composition comprised of resin particles, pigment particles, carrier particles, and a telomeric amine charge enhancing additive of the formula:

$[A_xB_y]Z$

wherein A is a segment that is soluble/dispersible in the resin particles, B is an amine segment, x and y are numbers representing mole fractions of A and B, the sum of x and y being equal to 1, and Z represents the degree of polymerization, wherein there results a telomeric amine having a number average molecular weight of from about 1,000 to about 10,000.

4,371,602
PHOTOSENSITIVE PRINTING PLATE

Hidenori Iwasaki, 905, Ichinomiya, Samukawa-machi, Koza-gun, Kanagawa 253-01; Junichi Igarashi, 11-17, Denenchofu 2 chome, Ohta-ku, Tokyo 145, and Shunichi Kasukawa, 3768, Fujisawa, Fujisawa-shi, Kanagawa 251, all of Japan

PCT No. PCT/JP79/00060, § 371 Date Nov. 13, 1979, § 102(e) Date Nov. 13, 1979, PCT Pub. No. WO79/00748, PCT Pub. Date Oct. 4, 1979
PCT Filed Mar. 9, 1979, Ser. No. 170,670
Claims priority, application Japan, Mar. 13, 1978, 53-27614
Int. Cl.³ G03C *1/60, 1/71;* **G03F** *7/08*

U.S. Cl. 430—175 **4 Claims**

1. A photosensitive printing plate comprising a support and a photosensitive layer coated thereon, the photosensitive layer having a roughened surface especially suitable for vacuum contact of a negative thereon, the layer comprising a photosensitive composition containing a photosensitive resin and one or more organic foaming agents in an amount of approximately 3 to 30% by weight based on the photosensitive resin and wherein said organic foaming agent is thermally decomposed prior to exposure to light to produce a gas, thereby roughening the surface of said photosensitive layer;
said resin is selected from the group consisting of polyvinyl cinnamate, derivatives of polyvinyl cinnamate, partially saponified polyvinyl acetate, diazo resin with acrylic copolymer, diazo resin and shellac mixture, condensates of diethyl-p-phenylene diacrylate, condensates of 1,4-di-β-hydroxyethyl-cyclohexane, and o-naphtho-quinonediazide; and
said organic foaming agent is selected from the group consisting of dinitrosopentamethylenetetramine, N,N′-dimethyl-N,N′-dinitrosoterephthalamine, trinitrosotrimethylenetriamine, p-toluenesulfonylhydrazine, benzenesulfonylhydrazine, p,p′-oxybis (benzenesulfonylhydrazine), benzene-1,3-disulfonylhydrazine, 3,3′-disulfonylhydrazinephenylsulfone, toluene-2,4-disulfonylhydrazine, p,p′-thiobis(benzenesulfonylhydrazine), azobisisobutyronitrile, azodicarboneamide(azobisformamide), azoaminobenzene, azocarboxylic acid diethylester (diethylazocarboxylate), hydrazodicarbonamide, N,N′-dibenzoyl-hydrazine, β-acetylphenylhydrazine, biurea, and 1,1-diphenylhydrazine.

4,371,603
AMINO HYDROXY CYCLOHEXENONE DEVELOPING AGENTS

James R. Bartels-Keith, Lexington, and Eva R. Karger, Arlington, both of Mass., assignors to Polaroid Corporation, Cambridge, Mass.

Filed Dec. 30, 1980, Ser. No. 221,291
Int. Cl.³ G03C *1/42, 1/48*

U.S. Cl. 430—218 **18 Claims**

1. A photographic product comprising a support, a silver halide emulsion carried on said support and a developing agent of the formula

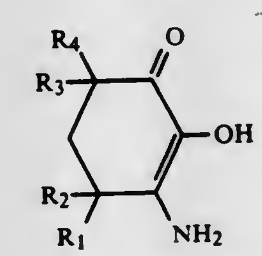

wherein R_1, R_2, R_3 and R_4 each are alkyl, said developing agent being carried in a layer on the same side of the support as said emulsion.

4,371,604
PHOTOGRAPHIC MATERIAL SUITED FOR USE IN DIFFUSION TRANSFER PHOTOGRAPHY

Christian C. Van de Sande, Belsele; Wilhelmus Janssens, Aarschot, both of Belgium; Wolfgang Lässig, and Ernst Meier, both of Munich, Fed. Rep. of Germany, assignors to Agfa-Gevaert, N.V., Mortsel, Belgium

Filed Mar. 31, 1981, Ser. No. 249,508
Claims priority, application United Kingdom, Apr. 14, 1980, 8012242
Int. Cl.³ G03C *1/40, 7/00, 1/10*

U.S. Cl. 430—223 **12 Claims**

1. A photographic silver halide material comprising a support carrying at least one unexposed alkali-permeable silver halide hydrophilic colloid emulsion layer which contains therein a quinonoid compound having a para- or ortho-quinonoid nucleus and which compound is immobile in an alkali-permeable colloid medium when contacted with an alkaline liquid and which contains a photographically useful group and a ballast group, wherein said compound is capable of being reduced by a silver halide developing agent at a rate slower than that of image-wise developable silver halide in the photographic material and in reduced state is capable of releasing said photographically useful group under alkaline conditions, characterized in that said quinonoid compound corresponds to one of the following formulae (A) or (B):

(A)

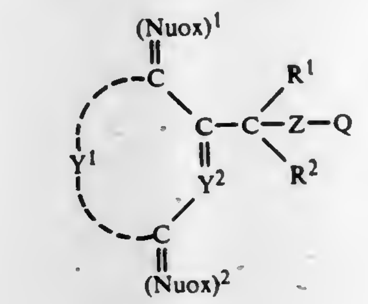

(B)

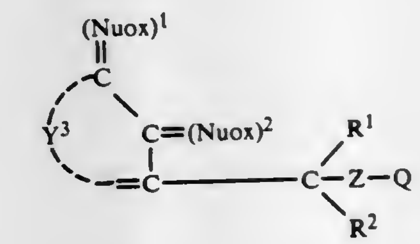

wherein:
each of $(Nuox)^1$ and $(Nuox)^2$ (same or different) represents an oxidized nucleophilic group,
Z represents a bivalent atom or a bivalent atomic group, which is electro-negative with respect to the carbon atom carrying R^1 and R^2,
Q together with the group Z represents a releasable photographically useful group,
Y^1 and Y^2 together represent the necessary atoms to close a p-quinonoid ring substituted with (a) directly linked monovalent organic ring or ring system substituent(s) having aromatic character,
Y^3 represents the necessary atoms to close an o-quinonoid ring substituted with (a) directly linked monovalent organic ring or ring system substituent(s) having aromatic character, and
each of R^1 and R^2 (same or different) represents hydrogen or a hydrocarbon group, at least R^1, R^2 or a substituent on the quinonoid ring being or containing a ballasting group X of sufficient size to keep said compound immobile in an alkali-permeable layer of the photographic material when said layer is contacted with an alkaline liquid, the monovalent organic ring or ring system substituent having aromatic character being a monovalent organic substituent derived from an organic substance having only carbon atoms or carbon atoms and (a) heteroatom(s) linked to each other forming a ring or ring system stabilized by resonance due to overlapping π-orbitals of alternating double bonds or of double bonds and (a) lone pair p-orbital(s) of (a) hetero atom(s), whereby the Hückel rule is obeyed, said rule stating that $(4n+2)$ electrons should be present in the overlapping orbitals, n being any positive integer here not including zero.

12. A photographic material according to claim 1, characterized in that the material is a film unit that is adapted to be processed by passing said unit between a pair of juxtaposed pressure-applying members, said unit comprising (1) a photosensitive element, which contains a silver halide emulsion layer having associated therewith said quinonoid compound that is initially immobile in an alkali-permeable colloid medium and wherefrom through the reducing action of a silver halide developing agent and alkalinity a dye is split off in diffusible state, (2) an image dye-receiving layer, (3) means for discharging an alkaline processing composition within the film unit, said means being a rupturable container, which is adapted to be

positioned during processing of the film so that a compressive force applied to the container by the pressure-applying members will effect a discharge of the container's contents within the film, and (4) a silver halide developing agent, which is soluble in an alkaline processing composition locatedwithin said film unit.

4,371,605

PHOTOPOLYMERIZABLE COMPOSITIONS CONTAINING N-HYDROXYAMIDE AND N-HYDROXYIMIDE SULFONATES

Carl A. Renner, Wilmington, Del., assignor to E. I. Du Pont de Nemours and Company, Wilmington, Del.

Filed Dec. 9, 1980, Ser. No. 214,960

Int. Cl.[3] G03C *1/68*

U.S. Cl. 430—280 **26 Claims**

1. The cationically photopolymerizable composition consisting essentially of

(A) a cationically polymerizable organic composition; and

(B) a photoinitiator which is a photosensitive sulfonic acid ester of a N-hydroxyamide or N-hydroxyimide,

wherein the cationically polymerizable organic composition (A) is a monomeric or prepolymeric epoxide; the photoinitiator (B) is of the formula

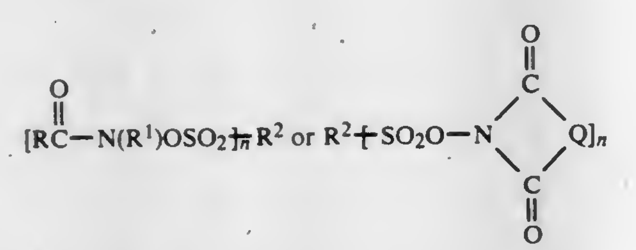

wherein R^2 is a monovalent or divalent organic group selected from aliphatic, cycloaliphatic, and aromatic groups; R is a monovalent organic group selected from aliphatic, cycloaliphatic, and aromatic groups; R^1 is H, a monovalent aliphatic or cycloaliphatic organic group or

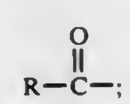

Q is the divalent group which when combined with

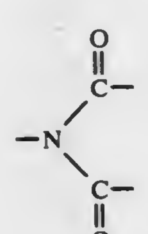

forms a 5-7 membered ring; and n is 1 or 2; and

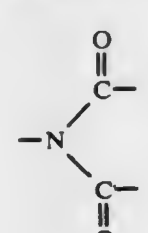

which contains, in addition to the essential components, (A) and (B), at least one nonessential additive which is a photosensitizing compound.

4,371,606

2-(HALOGENOMETHYL-PHENYL)-4-HALOGENO-OXAXOLE DERIVATIVES, A PROCESS FOR THE PREPARATION THEREOF, AND RADIATION-SENSITIVE COMPOSITIONS CONTAINING THESE DERIVATIVES

Reinhard Dönges, Bad Soden, Fed. Rep. of Germany, assignor to Hoechst Aktiengesellschaft, Fed. Rep. of Germany

Filed Jun. 9, 1981, Ser. No. 272,049

Claims priority, application Fed. Rep. of Germany, Jun. 9, 1980, 3021599

Int. Cl.[3] G03C *1/72*

U.S. Cl. 430—281 **11 Claims**

1. 2-(halogenomethyl-phenyl)-4-halogeno-oxazole derivatives of the general formula I

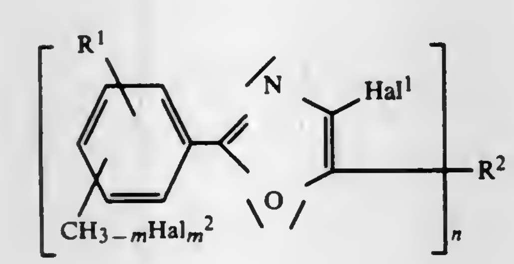

I

wherein

Hal^1 is a halogen atom,

Hal^2 is a chlorine or bromine atom,

m is an integer from 1 to 3,

n is an integer from 1 to 4,

R^1 is a hydrogen atom or a further $CH_{3-m}Hal^2_m$ group, and

R^2 is an n-valent, unsaturated organic radical.

6. A radiation-sensitive composition as claimed in claim 1 which additionally comprises an ethylenically unsaturated compound which is capable of undergoing a polymerization reaction initiated by free radicals.

4,371,607

4-HALOGENO-5-(HALOGENOMETHYL-PHENYL)-OXAZOLE DERIVATIVES, A PROCESS FOR THE PREPARATION THEREOF, AND RADIATION-SENSITIVE COMPOSITIONS CONTAINING THESE DERIVATIVES

Reinhard Dönges, Bad Soden, Fed. Rep. of Germany, assignor to Hoechst Aktiengesellschaft, Fed. Rep. of Germany

Filed Jun. 9, 1981, Ser. No. 272,050

Claims priority, application Fed. Rep. of Germany, Jun. 9, 1980, 3021590

Int. Cl.[3] G03C *1/72*

U.S. Cl. 430—281 **10 Claims**

1. 4-halogeno-5-(halogenomethyl-phenyl)-oxazole derivatives of the general formula I

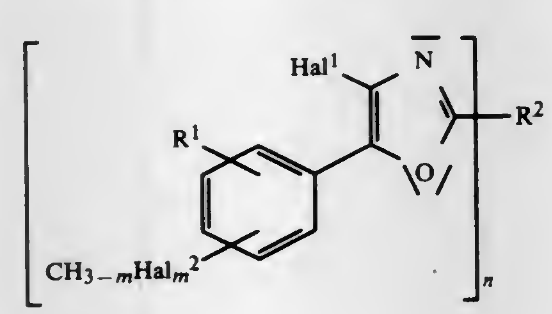

I

wherein

Hal^1 is a halogen atom,

Hal^2 is a chlorine or bromine atom,

m is an integer from 1 to 3,

n is an integer from 1 to 4,

R^1 is a hydrogen atom or a further $CH_{3-m}Hal^2_m$ group, and

R^2 is a n-valent, unsaturated organic radical.

5. A radiation-sensitive composition as claimed in claim 1, which additionally comprises an ethylenically unsaturated compound which is capable of undergoing a polymerization reaction initiated by free radicals.

4,371,608

RESIST SYSTEM HAVING INCREASED LIGHT RESPONSE

Amitabha Das, Cambridge, Mass., assignor to Ionomet Company, Brighton, Mass.

Filed Jun. 22, 1981, Ser. No. 275,816

Int. Cl.[3] G03C *5/00, 1/76*

U.S. Cl. 430—315 **8 Claims**

1. A process of microlithography for preparing an element useful in the production of semiconductor devices comprising

coating a thin layer of silver on a chalcogenide surface on a semiconductor element substrate,

exposing the silver-coated chalcogenide layer to activating radiation in a pattern corresponding to the desired semiconductor device pattern on the substrate in a radiation time and intensity of about 5 milliJoules per square centimeter to form a weak silver image insufficient to form a fully etchable chalcogenide,

removing silver from the background areas of the chalcogenide surface,

treating the chalcogenide surface with a desensitizing agent to neutralize the chalcogenide surface against the subsequent silver deposition thereon from a silver-containing agent,

intensifying the silver image pattern on the chalcogenide with an intensifying agent containing depositable silver to deposit additional silver material on the silver image areas on the chalcogenide, and

driving the silver image into the chalcogenide by suitable radiation to form an etch resistant cap on the chalcogenide in the image areas, whereby there is formed an etchable image on the chalcogenide surface corresponding to a desired semiconductor device pattern.

4,371,609

FORMING METHOD OF A DYE IMAGE

Makoto Kajiwara; Akihiko Miyamoto, both of Odawara; Keiji Ohbayashi, Sagamihara, and Masaru Iwagaki, Odawara, all of Japan, assignors to Konishiroku Photo Industry Co., Ltd., Japan

Filed Jul. 16, 1981, Ser. No. 283,911

Claims priority, application Japan, Jul. 19, 1980, 55/98175

Int. Cl.[3] G03C *7/00, 5/32*

U.S. Cl. 430—373 **6 Claims**

1. A method for the formation of a dye image which comprises processing a photographic material comprising imagewise distributed catalyzer substance in the presence of hydrogen peroxide, a coupler and an aromatic primary amine compound selected from the compounds represented by the general formulas [I], [II] and [III] below;

[I]

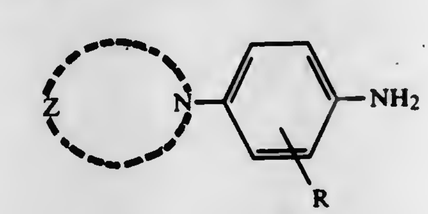

[wherein, R represents hydrogen atom, an alkyl group, an alkoxy group and a halogen atom and Z represents non-metallic atom group necessary for the formation of a nitrogen containing 5 to 7 membered saturated hetero ring],

[II]

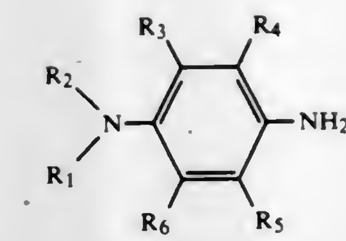

[wherein, R_1 and R_2 independently represent a substituted or unsubstituted alkyl group, R_3, R_4, R_5 and R_6 independently represent hydrogen atom, substituted or unsubstituted alkyl group, alkoxy group or halogen atom provided that at least one of R_3, R_4, R_5 and R_6 is a halogen atom],

[III]

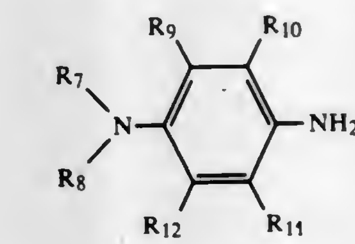

[wherein, R_7 and R_8 independently represent a substituted or unsubstituted alkyl group, R_9, R_{10}, R_{11} and R_{12} independently represent a hydrogen atom, a substituted or unsubstituted alkyl group, alkoxy group or amino group provided that at least one of R_9 and R_{12} is a substituted or unsubstituted alkyl group, alkoxy group or amino group].

4,371,610

PROCESS FOR DEVELOPMENT-PROCESSING SILVER HALIDE LIGHT-SENSITIVE MATERIAL

Takashi Toyoda; Isamu Itoh, and Minoru Yamada, all of Minami-ashigara, Japan, assignors to Fuji Photo Film Co., Ltd., Kanagawa, Japan

Filed Jul. 24, 1981, Ser. No. 286,482

Claims priority, application Japan, Jul. 24, 1980, 55-101739

Int. Cl.[3] G03C *5/30*

U.S. Cl. 430—445 **8 Claims**

1. A method for processing a silver halide black and white light-sensitive material comprising treating said material imagewise exposed with a developing solution which contains 0.1 mole/l or more of sulfite and at least one compound represented by the following general formula (I)

(I)

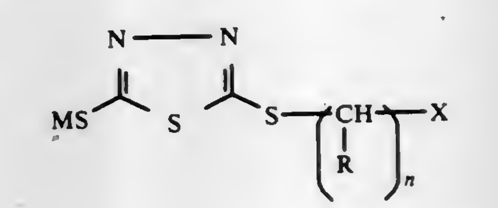

wherein M represents a hydrogen atom, an alkali metal atom or an ammonium group; R represents a hydrogen atom or an alkyl group having 1 to 4 carbon atoms; n represents an integer of 1 to 8; and X represents a sulfonic acid group, a sulfonate group, a carboxylic acid group or a carboxylate group.

4,371,611

ENZYMATIC DIAGNOSTIC COMPOSITION

Murray C. Fusee, Ellicott City, Md., assignor to W. R. Grace & Co., New York, N.Y.

Continuation-in-part of Ser. No. 931,334, Aug. 7, 1978, Pat. No. 4,226,935. This application Sep. 23, 1980, Ser. No. 189,994

The portion of the term of this patent subsequent to Oct. 7, 1997, has been disclaimed.

Int. Cl.[3] C12Q *1/00, 1/50;* **C12N** *11/06*

U.S. Cl. 435—14 **34 Claims**

1. A diagnostic composition comprising a mixture of hexoki-

nase and glucose-6-phosphate dehydrogenase bound in biologically-active form to a carboxylated poly(urea-urethane) polymer matrix having oxyalkylene backbone segments wherein at least 60 mole percent of the oxyalkylene units are oxyethylene,

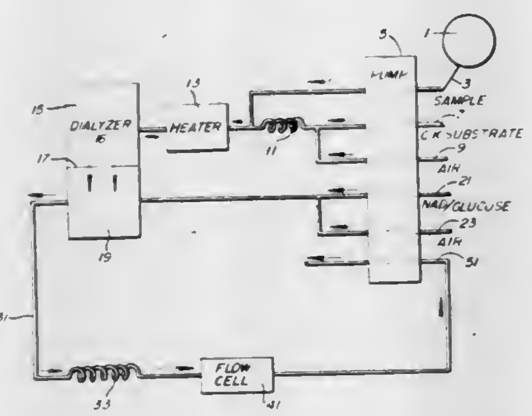

said carboxylated polymer prepared by reacting an excess of a polyoxyalkylene urethane prepolymer with a polymeric amino acid and wherein said enzymes are bonded to at least one exterior surface of said polymer matrix.

4,371,612
IMMOBILIZATION OF BIOLOGICAL MATERIAL WITH AN ACRYLONITRILE POLYMER
Kunio Matsumoto, Mishima; Rokuro Izumi, Shizuoka; Hideji Seijo, Shizuoka, and Hiroyuki Mizuguchi, Shizuoka, all of Japan, assignors to Toyo Jozo Company, Ltd., Japan
Continuation of Ser. No. 10,997, Feb. 9, 1979, abandoned. This application Dec. 1, 1980, Ser. No. 211,807
Claims priority, application Japan, Feb. 17, 1978, 53-18001
Int. Cl.[3] C12P *37/06;* **C12N** *11/08, 11/06;* **C12P** *35/00*
U.S. Cl. 435—44 **71 Claims**

1. An immobilized material comprising a biologically active enzyme bound by covalent bonding with a crosslinking agent or condensing agent onto a carrier which is a water-insoluble acrylonitrile polymer containing from 20 μM to 1000 μM of amino groups per gram of the polymer and having a porous structure containing a number of micro-pores with an average size of from 40 to 9000 A, said acrylonitrile polymer being produced by effecting reduction of an acrylonitrile polymer having said porous structure in an inert non-solvent with lithium aluminum hydride.

4,371,613
METHOD FOR PRODUCING PURINE ARABINOSIDES
Takashi Utagawa, Kawasaki; Takeshi Miyoshi, Fijisawa; Hirokazu Morisawa, Kawasaki; Akihiro Yamazaki, Yokosuka; Fumihiro Yoshinaga, Fujisawa, and Koji Mitsugi, Yokohama, all of Japan, assignors to Ajinomoto Company Incorporated, Tokyo, Japan
Filed Aug. 1, 1978, Ser. No. 930,046
Claims priority, application Japan, Aug. 10, 1977, 52/95766; Dec. 28, 1977, 52/158738; Jan. 11, 1978, 53/1802; Jul. 11, 1978, 53/84196; Jul. 18, 1978, 53/87288
Int. Cl.[3] C12P *19/40, 19/32*
U.S. Cl. 435—88 **12 Claims**

1. A method for producing purine arabinoside, which comprises:

(a) holding at a temperature in the range from 40° C. to 70° C. in an aqueous medium in arabinose donor selected from the group consisting of D-arabinofuranose-1-phosphate, the compound of formula I and the phosphate of said compound, and a purine source selected from the group consisting of unsubstituted or 2,6 and/or 8-substituted purine and its ribofuranoside, ribofuranotide, deoxyribofuranoside or deoxyribofuranotide in the presence of an effective amount of enzyme produced by a bacterium and capable of transarabinosylation from the arabinose donor to the unsubstituted or 2,6 and/or 8-substituted purine of the purine source, whereby β-D-arabinofuranosyl radical is attached to the 9-position of the unsubstituted or 2,6 and/or 8-substituted purine; and

(b) recovering the produced 9-(β-D-arabinofuranosyl)-unsubstituted or 2,6 and/or 8-substituted purine

Formula I:

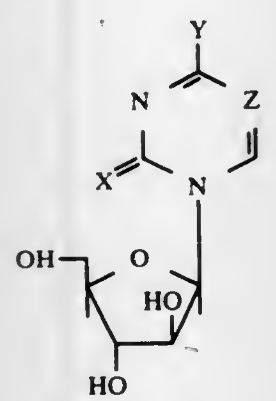

X represents O, S or NH;
Y represents OH, NH_2, SH or SR (R is a lower alkyl group); and
Z represents H, halogen, NO_2, CH_3 or CH_2OH.

4,371,614
***E.COLI* BACTERIA CARRYING RECOMBINANT PLASMIDS AND THEIR USE IN THE FERMENTATIVE PRODUCTION OF L-TRYPTOPHAN**
David M. Anderson, Rockville, Md.; Klaus M. Herrmann, and Ronald L. Somerville, both of West Lafayette, Ind., assignors to Ajinomoto Co., Inc., Tokyo, Japan
Filed Aug. 22, 1980, Ser. No. 180,296
Int. Cl.[3] C12N *1/00;* **C12R** *1/19;* **C12N** *9/00;* **C12P** *13/22, 21/00;* **C12N** *15/00, 1/20*
U.S. Cl. 435—108 **34 Claims**

18. A method of producing L-tryptophan by fermentation which comprises:

growing a bacterium which comprises a host of the genus Escherichia deficient in the enzyme tryptophanase, carrying a plasmid with genetic information to control tryptophan production in an appropriate growth medium, and collecting tryptophan from said medium;

wherein said host is resistant to a tryptophan analog.

4,371,615
METHOD FOR STABILIZING THE CHARACTERISTICS OF MICROORGANISM CONTAINING A PLASMID
Kiyoshi Miwa, Matsudo, and Haruo Momose, Kamakura, both of Japan, assignors to Ajinomoto Company Incorporated, Tokyo, Japan
Filed May 23, 1980, Ser. No. 152,633
Claims priority, application Japan, May 23, 1979, 54-63467
Int. Cl.[3] C12P *13/08;* **C12N** *15/00;* **C12R** *1/85, 1/19*
U.S. Cl. 435—115 **8 Claims**

1. A method for stabilizing the characteristics of a microorganism containing a plasmid, which comprises:

introducing a plasmid obtained from a microorganism of the genus Escherichia into a mutant of the genus Escherichia, said plasmid having incorporated therein a chromosomal DNA fragment expressing independence of streptomycin, and the growth of said mutant being dependent on streptomycin; and

cultivating and maintaining the stability of said plasmid containing microorganism in a growth medium free of streptomycin.

8. A method for stabilizing the characteristics of a microorganism containing a plasmid, which comprises:

introducing a plasmid obtained from a microorganism of the genus Escherichia into a mutant of the genus Escherichia, said plasmid having incorporated therein a chromosomal DNA fragment expressing independence of streptomycin and a chromosomal DNA fragment expressing threonine

production, and the growth of said mutant being dependent on streptomycin; and

cultivating and maintaining the stability of said plasmid containing microorganism in a growth medium free of streptomycin.

4,371,616
PROCESS FOR PRODUCING L-SUGARS
Derk T. A. Huibers, Pennington, N.J., assignor to Hydrocarbon Research, Inc., Lawrenceville, N.J.
Filed Aug. 26, 1981, Ser. No. 296,094
Int. Cl.[3] C12P *19/02;* **C07H** *1/00, 1/06*
U.S. Cl. 435—105 **23 Claims**

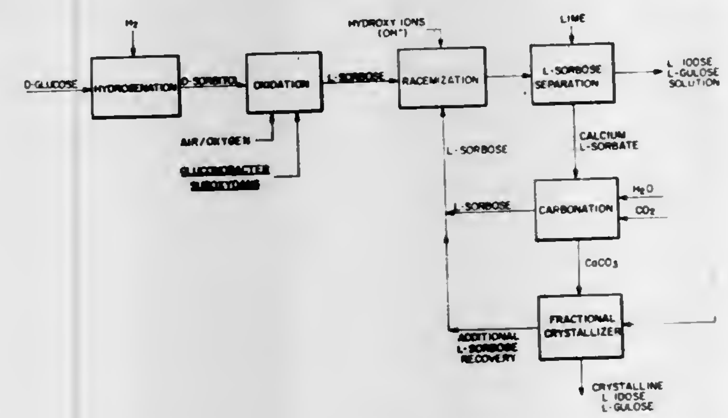

1. A method of producing L-sugars including L-idose and L-gulose from D-glucose, which comprises the steps of:

(a) hydrogenating D-glucose to provide D-sorbitol;
(b) oxidizing said D-sorbitol to provide L-sorbose;
(c) racemizing said L-sorbose to provide a mixture of L-sorbose, L-idose and L-gulose; and
(d) precipitating the unracemized L-sorbose under cooling with lime from a dilute solution.

4,371,617
PROCESS FOR PREPARING THIENAMYCIN
Kentaro Tanaka, Suita; Naoki Tsuji, Ashiya; Eiji Kondo, Ikeda, and Yoshimi Kawamura, Mino, all of Japan, assignors to Shionogi & Co., Ltd., Osaka, Japan
Filed Mar. 18, 1981, Ser. No. 244,857
Claims priority, application Japan, Apr. 17, 1980, 55/51007
Int. Cl.[3] C12P *17/18;* **C12R** *1/465*
U.S. Cl. 435—119 **4 Claims**

1. A process for preparing thienamycin which comprises cultivating a thienamycin-producing strain of *Streptomyces penemifaciens* sp. nov. or a mutant thereof in a medium under aerobic conditions, and isolating the accumulated thienamycin from the cultured broth.

4,371,618
PROCESS FOR ENZYMATICALLY PRODUCING L-CARNITINE
Claudio Cavazza, Rome, Italy, assignor to Sigma-Tau Industrie Farmaceutiche Riunite S.p.A., Rome, Italy
Filed Jun. 24, 1981, Ser. No. 277,008
Claims priority, application Italy, Jun. 24, 1980, 86253 A/80
Int. Cl.[3] C12P *13/00;* **C12R** *1/645*
U.S. Cl. 435—128 **9 Claims**

1. A process for the preparation of L-carnitine which comprises contacting γ-butyrobetaine in the presence of sodium 2-oxoglutarate, a reducing agent, a source of ferrous ions and a hydroxyl group donor solvent, with a source of the hydroxylase enzyme released from the spores of *Neurospora crassa.*

4,371,619
ACETIC ACID BY FERMENTATION
Robert D. Schwartz, Concord, Calif., and Frederick A. Keller, Jr., Naperville, Ill., assignors to Union Carbide Corporation, Danbury, Conn.
Filed Jun. 23, 1980, Ser. No. 162,254
Int. Cl.[3] C12P *7/54*
U.S. Cl. 435—140 **10 Claims**

1. The method of preparing biologically pure culture of a variant strain of the microorganism *Clostridium thermoaceticum* 99-78-22, accession number ATC 31490, which comprises the steps of:

(1) carrying out a series of fermentations at about 58° C. starting with an acetate tolerant strain of *Clostridium thermoaceticum* which grows in an aqueous nutrient medium containing assimilable sources of carbon, nitrogen and inorganic substances, at a pH of 6 and allowing batch growth to proceed under anaerobic conditions until about 15.0 grams of acetic acid per liter of nutrient medium is produced;
(2) transferring an aliquot of the growing culture to a second batch of the same nutrient as in step (1) but with a pH of 5.5 and allowing growth to continue until 16.0 grams of acetic acid per liter of nutrient is produced; and
(3) continuing successive transfers of aliquots of the growing culture medium until about 4.5 grams of acetic acid per liter of nutrient are produced having a pH of 4.5 and a redox potential E, measured with an Ingold Argenthal/Pt electrode of about −220 millivolts.

4,371,620
PROCESS FOR PRODUCING ACYL-COENZYME A OXIDASE
Toshiro Kikuchi; Masaru Ogawa, and Makoto Ando, all of Tsuruga, Japan, assignors to Toyo Boseki Kabushiki Kaisha, Osaka, Japan
Continuation of Ser. No. 127,536, Mar. 3, 1980, abandoned. This application Mar. 26, 1982, Ser. No. 362,133
Claims priority, application Japan, Mar. 1, 1979, 54-24232
Int. Cl.[3] C12N *9/02;* **C12Q** *1/26;* **C12R** *1/745*
U.S. Cl. 435—189 **2 Claims**

1. A method for the preparation of acyl-coenzyme A oxidase which comprises cultivating an acyl-coenzyme A oxidase-producing microorganism belonging to the genus Candida in a nutrient medium containing a long-chain fatty acid having 10 to 18 carbon atoms, thereby accumulating an amount of acyl-coenzyme A oxidase in yeast cells and recovering the acyl-coenzyme A oxidase from said cells.

4,371,621
MICROBIAL POLYAMINE OXIDASE AT-1
Hideaki Yamada; Yoshiki Tani, and Kimiyasu Isobe, all of Kyoto, Japan, assignors to Amano Pharmaceutical Co., Ltd., Nagoya, Japan
Filed Dec. 12, 1980, Ser. No. 216,301
Claims priority, application Japan, Dec. 24, 1979, 54-166952
Int. Cl.[3] C12R *1/82, 1/66, 21/00*
U.S. Cl. 435—191 **1 Claim**

1. Microbial polyamine oxidase AT-1 having the following physicochemical properties:

(1) Reactivity:
it reacts with spermidine to form 1 mol of putrescine, 1 mol of 3-aminopropionaldehyde and 1 mol of hydrogen peroxide from 1 mol of spermidine and it reacts with spermine to form 1 mol of putrescine, 2 mol of 3-aminopropionaldehyde and 2 mol of hydrogen peroxide from 1 mol of spermine;
(2) Substrate specificity:
it oxidizes spermidine and spermine at a rate of 2:1, but it does not substantially react with other amines;
(3) Optimum pH value:
the optimum pH value is about 6.5;

(4) pH Stability:
when it is treated at 30° C. for 30 minutes, the residual ratio of the activity at a pH value from 5.2 to 6.5 is higher than 90%;
(5) Optimum temperature:
the optimum temperature is about 50° C. at a pH value of 6.5 and the optimum temperature is about 45° C. at a pH value of 7.0;
(6) Temperature stability:
when it is treated at 30° C. for 10 minutes at a pH value of 6.5, the residual ratio of the activity is higher than 90%;
(7) Absorption spectrum:
from the fact that maximum absorptions are observed at 375 nm and 460 nm in the absorption spectrum, it is confirmed that the oxidase is a flavin protein;
(8) Influences of inhibitors and metal ions:
the activity is strongly inhibited by metal ions such as a silver ion and a mercury ion;
(9) Isoelectric point:
the isoelectric point is 5.0 to 5.25;
(10) Molecular weight:
the molecular weight is 130,000 as determined according to the gel filtration method using Sephadex G-200;
(11) Molecular weight of subunit:
the molecular weight of the subunit is 65,000 as determined according to the SDS disc electrophoresis method;
(12) Crystal form:
it takes the form of a needle crystal.

4,371,622
MICROMONOSPORA CULTURE

Miklos Jarai; Sandor Piukovich, both of Budapest; Sandor Istvan, Szentendre; Istvan Gado, Budapest; Valeria Szell, Budapest, and Istvan Barta, Budapest, all of Hungary, assignors to CHINOIN Gyogyszer es Vegyeszeti Termekek Gyara R.T., Budapest, Hungary
Filed Jan. 30, 1980, Ser. No. 116,916
Claims priority, application Hungary, Jan. 2, 1979, CI 1906
Int. Cl.³ C12N *1/20;* C12R *1/29*
U.S. Cl. 435—253 **2 Claims**

1. A substantially biologically pure culture of the actinomyces species *Micromonospora danubiensis* having the capability of producing sisomicin upon cultivation in an aqueous nutrient medium.

4,371,623
SOLAR STILL

G. Brandt Taylor, Berlin, Mass., assignor to William N. Durkin, Boston, Mass., a part interest
Filed Feb. 9, 1981, Ser. No. 233,031
Int. Cl.³ C07C *29/80;* C12M *1/38;* C12P *7/14*
U.S. Cl. 435—290 **11 Claims**

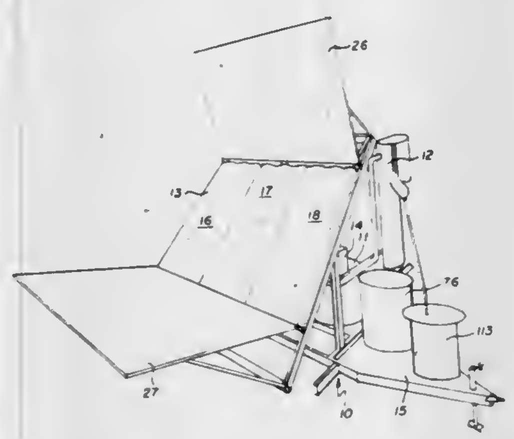

1. A solar still for producing alcohol, comprised of:
(a) at least one fermenting tank adapted to produce a beer by fermentation,
(b) a heat exchanger,
(c) a solar collector adapted to absorb energy from the sun and use that energy to heat a working fluid,
(d) a working fluid conveying system adapted to circulate the working fluid through the solar collector and through the heat exchanger,
(e) a distillation unit comprising:
(1) a stripping fractioning column,
(2) a rectification fractioning column, and
(3) a transfer conduit operatively connecting the top of the stripping column to the bottom of the rectification column,
(f) transferring means adapted to convey the beer from the fermenting tank to the heat exchanger, wherein energy from the working fluid is transferred to the beer, the beer and the working fluid flowing in separate conduits so that the beer and working fluid never mix, and
(g) means for conveying the beer from the heat exchanger to the top of the stripping column where the beer is divided into an alcohol rich vapor phase stream which passes through the transfer conduit to the rectification column where it moves up the rectification column and an alcohol weak stream which flows downwardly through the stripping column, whereby beer in the vapor phase from the alcohol weak stream moves up the stripping column, through the transfer conduit to the bottom of the rectification column and up the rectification column.

4,371,624
APPARATUS AND TESTING REACTIONS

Rolf Saxholm, Box 3, 1362 Billingstad, Norway
Division of Ser. No. 716,684, Aug. 23, 1976, Pat. No. 4,213,825, which is a continuation-in-part of Ser. No. 502,107, Aug. 30, 1974, Pat. No. 3,981,776, which is a continuation-in-part of Ser. No. 156,738, Jun. 25, 1971, Pat. No. 3,843,450, which is a continuation-in-part of Ser. No. 705,539, Feb. 14, 1968, abandoned. This application Jan. 15, 1980, Ser. No. 112,407
Int. Cl.³ C12M *1/34, 1/16;* C12Q *1/18, 1/00*
U.S. Cl. 435—291 **8 Claims**

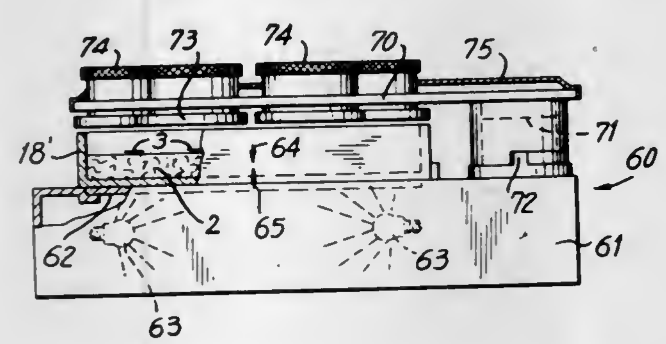

1. A reader device adapted for the detection of results of a reaction on a substrate due to application thereon of an article operatively combined with magnetically responsive means and adapted for containing an active constituent, said reader device comprising means for producing a magnetic field for acting on the magnetically responsive means combined with said article to hold the article in operative position with the substrate, viewer means for viewing the substrate and the article applied thereto, measuring means operatively associated with said viewer means for determining the magnitude of any result due to reaction, first electrical means coupled to the measuring means for producing in response thereto, a first electrical signal for each article indicative of the magnitude of the result thereof, second electrical means for producing a second electrical signal for identifying said article, and third electrical means for correlating the first and second electrical signals for said article.

4,371,625
VECTORS FOR THE INSERTION THEREIN OF FOREIGN DNA FRAGMENTS, ACCORDING TO ANY TRANSLATION PHASE

Pierre Tiollais, Paris, France, assignor to Institut Pasteur and Inst. Nat'l de la Sante et Recherche, both of Paris, France
Filed Nov. 13, 1979, Ser. No. 93,270
Claims priority, application France, Nov. 13, 1978, 78 32041
Int. Cl.³ C12N *1/00, 15/00*
U.S. Cl. 435—317 **24 Claims**

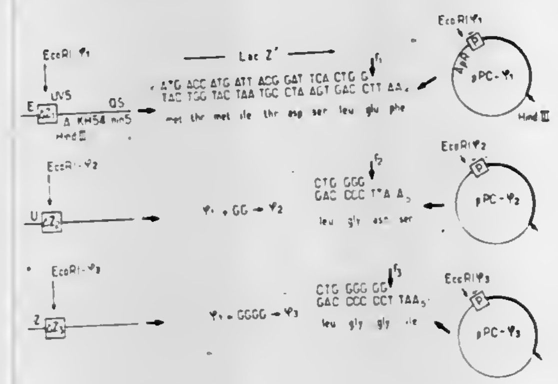

1. A composition of matter for the introduction of foreign DNA into a host whereby the expression of a protein having a desired amino acid sequence is provided, said composition of matter comprising the following three structurally interrelated vectors:
(A) a first vector which comprises:
(i) a preselected bacterial promoter in association with a preselected bacterial gene or part thereof, said preselected bacterial gene or part thereof comprising a translation initiation point,
(ii) a single recognition site for a preselected restriction endonuclease, said site being in association with the preselected bacterial gene or part thereof, and
(iii) a plurality of nucleotide base pair triplets between the translation initiation point of the gene or part thereof and the single restriction endonuclease recognition site associated with the gene or part thereof, wherein the plurality of nucleotide base pair triplets does not contain a nonsense codon, and
(B) a second vector which comprises
(i) (A) (i),
(ii) (A) (ii) and
(iii) the plurality of nucleotide base pair triplets plus two additional nucleotide base pairs between the translation initiation point of the gene or part thereof and the single restriction endonuclease recognition site associated with the gene or part thereof, wherein the plurality of nucleotide base pair triplets does not contain a nonsense codon, and
(C) a third vector which comprises:
(i) (A) (i),
(ii) (A) (ii) and
(iii) the plurality of nucleotide base pair triplets plus 1 or 4 additional nucleotide base pairs between the translation initiation point of the gene or part thereof and the single restriction endonuclease recognition site associated with the gene or part thereof, wherein the plurality of nucleotide base pair triplets does not contain a nonsense codon.

4,371,626
METHOD OF UPGRADING CRUDE SODIUM BENTONITE

Donald A. Hentz, Spearfish, S. Dak., assignor to Aurora Industries, Inc., Montgomery, Ill.
Filed Apr. 13, 1981, Ser. No. 253,787
Int. Cl.³ C09C *1/28, 1/42*
U.S. Cl. 501—145 **6 Claims**

1. A method of upgrading crude sodium bentonite to improve its fluid loss properties, said method comprising subjecting the crude bentonite to shearing forces that are sufficient to increase the methylene blue uptake by the bentonite, and then drying and pulverizing the bentonite.

4,371,627
PROCESS FOR THE CATALYTIC SYNTHESIS OF METHANE BY REACTING HYDROGEN WITH CARBON MONOXIDE

Yves Chauvin, Le Pecq; Dominique Commereuc, Meudon, and Andre Sugier, Rueil-Malmaison, all of France, assignors to Institut Francais du Petrole, Rueil-Malmaison, France
Filed Sep. 30, 1981, Ser. No. 307,150
Claims priority, application France, Sep. 30, 1980, 80 21000
Int. Cl.³ C07C *1/04*
U.S. Cl. 518—700 **14 Claims**

1. In a process for manufacturing methane by reacting hydrogen with carbon monoxide in an inert liquid hydrocarbon medium, in the presence of a catalyst manufactured by reacting at least one nickel compound with at least one reducing aluminum compound in an inert liquid hydrocarbon medium,
the improvement wherein said catalyst is the product obtained by reacting said nickel compound with said reducing aluminum compound in the presence of at least one hydrocarbon-soluble titanium compound in a non-oxidizing atmosphere; wherein the amount by weight of titanium relative to the aggregate (nickel+titanium), expressed as the metals, is from 1 to 50%; and wherein the atomic ratio of aluminum/(nickel+titanium) is from 1/1 to 20/1.

4,371,628
PROCESS FOR THE PREPARATION OF AROMATIC HYDROCARBONS USING CRYSTALLINE SILICATES AS CATALYST

Johannes M. Nanne, and Martin F. M. Post, both of Amsterdam, Netherlands, assignors to Shell Oil Company, Houston, Tex.
Filed Jul. 28, 1980, Ser. No. 172,734
Claims priority, application Netherlands, Aug. 2, 1979, 7905941
Int. Cl.³ C07C *1/04*
U.S. Cl. 518—713 **11 Claims**

1. A process for the preparation of an aromatic hydrocarbon mixture which comprises contacting at an elevated temperature and reaction conditions an H_2/CO mixture having an H_2/CO molar ratio below 1.0, with a mixture of two catalysts of which one has the capability of catalyzing the conversion of an H_2/CO mixture into acyclic oxygen-containing hydrocarbons and the other is a crystalline iron silicate having the following properties:
(a) thermally stable up to a temperature above 600° C.,
(b) an X-ray powder diffraction pattern having, inter alia, the reflections given in Table A of the specification,
(c) the composition of the silicate, expressed in moles of the oxides, includes oxides of hydrogen, alkali metal and silicon, and iron and has an Fe_2O_3/SiO_2 molar ratio (m) less than 0.1, said crystalline iron silicate having been prepared by a process comprising maintaining at an elevated temperature an aqueous mixture containing: at least one compound of an alkali metal (M), at least one quaternary alkylammonium compound (R_4NX), at least one silicon compound and at least one iron compound, in which mixture the compounds are present in the following ratios, expressed in moles of the oxides:
M_2O: $(R_4N)_2O$=0.4–1.0,
$[M_2O+(R_4N)_2O]$:SiO_2=0.24–0.40,
SiO_2:Fe_2O_3>10, and
H_2O:SiO_2=5–50,
until the crystalline silicate has formed, and separating the silicate from the mother liquor; and separating an aromatic hydrocarbon mixture from the reaction product.

4,371,629

PREPARATION OF A SEMIFLEXIBLE ENERGY MANAGEMENT POLYETHER POLYURETHANE FOAM USING AS A CROSSLINKER-SURFACTANT AN ETHYLENE OXIDE ADDUCT OF A MANNICH CONDENSATE PREPARED FROM THE REACTION OF NONYL PHENOL, DIETHANOLAMINE AND FORMALDEHYDE

Thomas H. Austin, Austin, Tex., assignor to Texaco Inc., White Plains, N.Y.

Continuation-in-part of Ser. No. 191,976, Sep. 29, 1980, abandoned. This application Sep. 17, 1981, Ser. No. 303,259

Int. Cl.[3] C08G *18/14*

U.S. Cl. 521—115 15 Claims

1. In a method for preparing a molded flexible polyurethane product wherein a polyol, a polyisocyanate, water and a crosslinker are reacted in a closable mold to form the polyurethane product the improvement which comprises

using a crosslinker comprising an ethylene oxide adduct of a Mannich condensate prepared from the reaction of nonyl phenol, diethanolamine and formaldehyde.

4,371,630

SOLUTION OF A POLYURETHANE IN A POLYOL AND A PROCESS FOR USING SUCH A SOLUTION IN THE PRODUCTION OF POLYURETHANE PLASTICS

Klaus König, Leverkusen; Hans-Walter Illger, Rösrath; Peter Seifert, Bergisch-Gladbach, and Holger Meyborg, Odenthal, all of Fed. Rep. of Germany, assignors to Bayer Aktiengesellschaft, Leverkusen, Fed. Rep. of Germany

Filed Feb. 23, 1981, Ser. No. 236,949

Claims priority, application Fed. Rep. of Germany, Mar. 6, 1980, 3008590

Int. Cl.[3] C08G *18/14, 18/32, 18/42*

U.S. Cl. 521—173 20 Claims

1. A solution of a polyurethane in a polyol comprising:

(a) the reaction product of a polyisocyanate with a diprimary diol, said diprimary diol having a molecular weight of from 90 to 800 and a structure at both hydroxyl groups corresponding to the general formula:

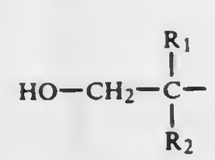

in which

R_1 represents chlorine or an alkyl, cycloalkyl, aralkyl or aryl radical having from 1 to 10 carbon atoms, which radical may be substituted or interrupted by chlorine, ester groups, ether groups, amide groups, urethane groups or nitrile groups, and

R_2 represents hydrogen or a radical within the definition of R_1; and

(b) a polyether with an average molecular weight of from 500 to 12,000 having at least two hydroxyl groups, in which at least 80% of the hydroxyl groups are secondary;

with the reaction product (a) comprising from 3 to 60 wt. % of the solution.

15. A process for the production of polyurethane flexible foamed plastics comprising reacting polyisocyanates with high molecular weight compounds having at least two hydroxyl groups and water, characterized in that the higher molecular weight compound having at least two hydroxyl groups is a solution comprising:

(a) the reaction product of a polyisocyanate and a diprimary diol, said diol having a molecular weight of from 90 to 800 and a structure at both hydroxyl groups corresponding to the formula:

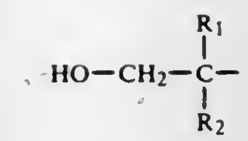

wherein

R_1 represents chlorine, an alkyl, cycloalkyl, aralkyl or aryl radical having from 1 to 10 carbon atoms, which carbon atoms may be substituted or interrupted by chlorine, ester groups, ether groups, amide groups, urethane groups, nitrile groups or a combination of such groups, and

R_2 represents hydrogen or a radical within the definition of R_1; and

(b) a polyether with an average molecular weight of from 500 to 12,000, said polyether having at least two hydroxyl groups with at least 80% of said hydroxyl groups being secondary hydroxyl groups.

4,371,631

BACKING PLATE COMPOSITION FOR BRAKE SHOES

Walter B. Peters, Englewood, Colo., assignor to Manville Service Corporation, Denver, Colo.

Filed Aug. 3, 1981, Ser. No. 289,142

Int. Cl.[3] C08J *5/14;* **C08L** *7/00, 9/00, 61/10*

U.S. Cl. 523—153 6 Claims

1. An asbestos-free sound attenuating backer plate composition capable of being directly molded between the metal backer plate and the friction material of tread-type railroad brake shoe and providing adhesion therebetween comprising by volume;

between 35–45% of organic fiber reinforced rubber tire friction stock, wherein said tire friction stock contains about 40% by weight of rayon, nylon or polyester fibers, and said tire friction stock is present in a size which facilitates blending with the other components of said backer plate composition;

between 5–25% additional chopped or shredded reinforcing fiber comprising fiber glass or mineral wool or cotton linters;

between 15–25% rubber makers hard clay;

between 15–25% anhydrous alumino silicate;

between 5–10% phenolic resin with the balance comprising rubber curing accelerators; zinc oxide and carbon black and wherein the rubber curing component and the additional reinforcing fiber are present in sufficient amounts to provide adequate shear strength for use as backer plate having a density in the finished product of from between 1.6 to 1.9 gm/cc at 25 degree C.

4,371,632

COMPOSITIONS, PROCESSES, AND WRITING ELEMENTS EMPLOYING RESINS OF THE THERMOSETTING TYPE

Harold Grossman, Silver Spring, Md.; Richard E. Merrill, Wakefield, and Paul B. Monaghan, Lexington, both of Mass., assignors to Empire Enterprises, Inc., Shelbyville, Tenn.

Filed Apr. 24, 1981, Ser. No. 257,246

Int. Cl.[3] C08K *3/04;* **C09D** *13/00*

U.S. Cl. 523—164 31 Claims

1. A composition for the manufacture of a cured extruded pencil core, comprising a blended extrudable mixture of a marking material, a phenolic novolac resin, a resin hardener, a plasticizer, and a lubricant, and wherein the ingredients of the composition have the following approximate proportions, by weight:

Ingredient	Percentage
Marking Material	55–75%
Resin (including hardener)	10–28%
Plasticizer	2–12%
Lubricant	4–22%

4,371,633

COATING COMPOSITION FOR ROADS AND OTHER SURFACES COMPRISING CHLORINATED RUBBER, CHLORINATED PARAFFIN AND AMORPHOUS SILICA

Alex N. Soltysyk, 1111 Woodlawn Dr., Newcastle, Ind. 47362

Filed Apr. 30, 1981, Ser. No. 258,903

Int. Cl.[3] C08K *5/01;* **H02G** *15/00;* **C08K** *3/36*

U.S. Cl. 523—172 2 Claims

1. A coating composition adapted for application to the surface of a road or driveway comprising about 10 to 25 weight percent chlorinated rubber, 8 to 20 weight percent solid chlorinated paraffin, 2 to 5 weight percent liquid chlorinated paraffin, 2 to 15 weight percent powdered amorphous silica, 20 to 50 weight percent chlorinated hydrocarbon solvent and 20 to 50 weight percent non-chlorinated solvent.

4,371,634

MICROCAPSULE-CONTAINING WAX COMPOSITION

Dietrich Hoffman, Roedersheim-Gronau, and Wolfgang Sliwka, Weinheim, both of Fed. Rep. of Germany, assignors to BASF Aktiengesellschaft, Rheinland-Pfalz, Fed. Rep. of Germany

Filed Nov. 16, 1981, Ser. No. 321,709

Claims priority, application Fed. Rep. of Germany, Nov. 24, 1980, 3044113

Int. Cl.[3] C08L *61/28*

U.S. Cl. 523—208 9 Claims

1. A microcapsule-containing wax composition which contains—based on (a+b+c):

(a) from 20 to 55% by weight of microcapsules,

(b) from 79 to 30% by weight of wax or of a mixture of different waxes, of melting point from about 50° to 140° C.,

(c) from 1 to 10% by weight of at least one non-ionic emulsifier, at least one alkali metal salt of a montan wax acid or a mixture of (α) at least one non-ionic emulsifier and (β) at least one alkali metal salt of a montan wax acid or alkali metal C_{10}–C_{20}-fatty alcohol-sulfate and/or alkali metal C_{10}–C_{20}-alkanesulfonate, or a mixture of these,

(d) from 0 to 20% by weight of one or more pigments, one or more fillers or a mixture of these and

(e) from 0 to 60% by weight of volatile constituents, the wall material of the microcapsules (a) being a polymeric melamine-formaldehyde condensate which is obtained by condensing melamine with formaldehyde or condensing methylolmelamines and/or their methyl ethers, using a ratio of melamine to formaldehyde of from 1:2 to 1:6, at a pH of from 3.5 to 5.5 and at from 60° to 100° C., and then hardening for from 2 to 10 hours at from 60° to 100° C., the ratio of core material to wall material in the capsules being from 1:15 to 1:2 and the microcapsules having a diameter of from 2 to 10 μm.

4,371,635

FILLED HIGH VINYL POLYBUTADIENE THERMOSETTING COMPOSITIONS CONTAINING A MALEIC ANHYDRIDE-POLYBUTADIENE ADDUCT

Guy Senatore, Bartlesville, Okla., assignor to Phillips Petroleum Company, Bartlesville, Okla.

Filed Mar. 11, 1982, Ser. No. 357,119

Int. Cl.[3] C08K *3/40, 3/22, 5/14*

U.S. Cl. 523—219 23 Claims

1. A composition comprising an admixture of:

(a) a high vinyl alkadiene polymer, having at least 50 percent of the alkadiene units bonded together in the 1, 2 mode of addition;

(b) organic peroxide;

(c) an adduct of an alkadiene polymer with an anhydride of a mono- or dicarboxylic acid, and

(d) an inorganic filler.

4,371,636

PREPARATION OF COPOLYMER DISPERSIONS HAVING A NARROW PARTICLE SIZE DISTRIBUTION, AND EXHIBITING DILATANT FLOW OVER A BROAD RANGE OF CONCENTRATIONS

Dieter Distler, Mutterstadt; Hans Wolf, Ludwigshafen, and Gerhard Welzel, Mannheim, all of Fed. Rep. of Germany, assignors to BASF Aktiengesellschaft, Ludwigshafen, Fed. Rep. of Germany

Filed Jul. 1, 1981, Ser. No. 279,548

Claims priority, application Fed. Rep. of Germany, Jul. 5, 1980, 3025562

Int. Cl.[3] C08L *35/06*

U.S. Cl. 523—223 6 Claims

1. A process for the preparation of copolymer dispersions having a narrow particle size distribution, and exhibiting dilatant flow over a broad range of concentrations, which comprises emulsion copolymerization of (a) from 2 to 10% by weight, based on total monomers, of a,b-monoolefinically unsaturated monocarboxylic acids or dicarboxylic acids (b) from 0 to 98% by weight of acrylic acid esters or methacrylic acid esters of alkanols of 1 to 4 carbon atoms, (c) from 0 to 98% by weight of styrene or methyl methacrylate; and (d) from 0 to 3% by weight of polyolefinically unsaturated monomers; the amount of the monomers (b) and (c) together being from 90 to 98% by weight, at 60°–95° C., in the presence of from 0 to 0.5% by weight of an anionic emulsifier and from 0 to 1% by weight of a non-ionic emulsifier, the percentages being based on the weight of monomers, with simultaneous agglomeration but only partial fusion of the initially formed polymer particles, which have a diameter of from 5 to 200 nm, at a temperature of ±10° C. of the glass transition temperature of the copolymer formed, and thereafter adjusting the copolymer content of the aqueous copolymer dispersion formed to 35–55% by weight and the pH to 3.8–5.0, unless these values already obtain.

4,371,637

MIXTURES OF REACTION PRODUCTS BASED ON EPOXIDES, PRIMARY AMINES AND FATTY ACIDS AND OF AMINOPLAST PRECONDENSATES, THEIR PREPARATION AND THEIR USE AS LEATHER DRESSINGS

Rosemarie Topfl, Dornach, Switzerland, assignor to Ciba-Geigy Corporation, Ardsley, N.Y.

Filed Jul. 2, 1981, Ser. No. 279,508

Claims priority, application Switzerland, Jul. 11, 1980, 5350/80

Int. Cl.[3] C08G *8/32, 59/00;* **C08L** *61/26, 63/02*

U.S. Cl. 523—416 27 Claims

1. A mixture of a reaction product (1) and an aminoplast precondensate (2), which mixture contains (1) a reaction product obtained from the following reactants: (a) an epoxide having at least two epoxy groups per molecule, (b) a primary amine having 2 to 8 carbon atoms and (c) a polymerised fatty acid which is derived from monomeric, unsaturated fatty acids having 16 to 22 carbon atoms, and (2) as the second component of the mixture, an aminoplast precondensate etherified by alkyl having 1 to 6 carbon atoms.

4,371,638

BINDER COMPOSITIONS FOR POWDER COATINGS FROM MIXED SATURATED RESINS

Daniel Bernelin, Ris Orangis, and Jacques Meyer, Paris, both of France, assignors to Rhone-Poulenc Industries, Paris, France

Continuation of Ser. No. 12,020, Feb. 14, 1979, abandoned. This application Aug. 20, 1981, Ser. No. 294,521

Claims priority, application France, Feb. 20, 1978, 78 04685

Int. Cl.^{3} C08L *67/02, 63/00, 63/02*

U.S. Cl. 523—427 **31 Claims**

1. A binder composition for use in powder coatings comprising

at least two saturated cross-linking resins wherein said at least two saturated cross-linking resins comprise resins selected from the group consisting of saturated polyester and epoxy resins, and

a cross-linking agent,

said resins exhibiting different reactivities with respect to said cross-linking agent such that a system comprising the most highly reactive resin and the cross-linking agent, with said system having a weight ratio of cross-linking agent/resin such that there is stoichiometric equilibrium, exhibits a curve on a mechanical spectrometer in an isothermal enclosure at 200° C. having a slope, in its rectilinear part, that is between 0.5×10^5 and 10^6 dynes/cm^2/minute, and that a system comprising the lesser reactive resin and the cross-linking agent, same having a weight ratio of cross-linking agent/resin such that the ratio of the reactive functions of the cross-linking agent to those of the resin is between about 1.5 and 4 times the stoichiometric ratio, exhibits a curve on a mechanical spectrometer in an isothermal enclosure at 200° C. which has a slope, in its rectilinear part, that is between about 10^3 and 6×10^3 dynes/cm^2/minute.

4,371,639

POLYESTER POLYMER CONCRETE COMPOSITIONS

Larry C. Muszynski, Houston, Tex., assignor to Shell Oil Company, Houston, Tex.

Filed Apr. 3, 1981, Ser. No. 250,990

Int. Cl.^{3} C08K *3/34;* **C08L** *67/06*

U.S. Cl. 523—512 **13 Claims**

1. A curable polymer concrete composition, suitable for articles of construction, comprising:

(1) from about 3% to about 15% by weight of a polyester composition,

(2) from about 85% to about 97% by weight of an aggregate composition comprising

(a) from about 50% to about 95% by weight of sand, and

(b) from about 5% to about 50% by weight of fly ash, and

(3) a free-radical initiator.

4,371,640

HOT MELT ADHESIVE COMPOSITIONS

Pawan K. Agarwal, Westfield, and Henry S. Makowski, Scotch Plains, both of N.J., assignors to Exxon Research and Engineering Co., Florham Park, N.J.

Filed Aug. 12, 1981, Ser. No. 292,191

Int. Cl.^{3} C08L *95/00*

U.S. Cl. 524—66 **13 Claims**

1. A hot melt adhesive composition which comprises:

(a) an amine terminated polyalkylene oxide neutralized sulfonated thermoplastic resin, said neutralized sulfonated thermoplastic resin having about 5 to about 250 meq. of neutralized sulfonated groups per 100 grams of said amine terminated polyalkylene oxide neutralized sulfonated thermoplastic resin; and

(b) about 25 to about 200 parts by weight of a hydrocarbon tackifying resin consisting of a petroleum or coal tar distillate per 100 parts by weight of said amine terminated polyalkylene oxide neutralized sulfonated thermoplastic resin.

8. A composition according to claim 1 wherein said composition is extended with a filler or oil or mixture thereof, wherein said filler is selected from the group consisiting of talcs, calcium carbonates, delaminated calcined and hydrated clays, silicas and carbon blacks and mixtures thereof and said oil is selected from the group consisting of naphthenic, aromatic and paraffin petroleum oils.

4,371,641

BITUMEN-CONTAINING EXTENDED COMPOSITIONS

Gerard A. M. Boyer, Notre Dame de Bondeville, France; Ilan Duvdevani, Leonia, N.J., and Jean-Marie A. Muller, Bihorel, France, assignors to Exxon Research and Engineering Co., Florham Park, N.J.

Filed Dec. 21, 1981, Ser. No. 333,127

Int. Cl.^{3} C08L *95/00*

U.S. Cl. 524—70 **11 Claims**

1. A bitumen-containing composition which comprises:

(a) bitumen;

(b) about 5 to about 25 parts by weight of a neutralized sulfonated polymer per 100 parts by weight of the bitumen; and

(c) about 0 to about 100 parts by weight of a filler per 100 parts by weight of the bitumen.

4,371,642

PROCESS FOR PREPARING POLYOLEFIN RESIN EXTENDED PIGMENTS

Edward E. Jaffe, Wilmington, Del., assignor to E. I. Du Pont de Nemours and Company, Wilmington, Del.

Filed Jul. 7, 1981, Ser. No. 281,195

Int. Cl.^{3} C08K *5/56;* **C09B** *48/00, 47/04;* **C08K** *5/34*

U.S. Cl. 524—88 **8 Claims**

1. A process comprising dry premilling a crude organic pigment followed by milling the premilled pigment with shot and from 10 to 75 percent by weight, based on the amount of pigment and resin present of a thermoplastic resin in an organic liquid in which said resin is soluble to an extent of less than 5 g per liter at 30° C. and which wets the surface of the pigment particles and can improve their crystallinity while maintaining said pigment and said resin in a finely divided solid state, and recovering a resin extended pigment of pigmentary particle size.

4,371,643

PARTICLE SIZE REDUCTION OF PIGMENTS BY NON-SALT MILLING

Daniel W. Thomas, Bridgewater, N.J., assignor to American Cyanamid Co., Stamford, Conn.

Continuation-in-part of Ser. No. 174,397, Jul. 31, 1980, abandoned. This application Aug. 31, 1981, Ser. No. 297,584

Int. Cl.^{3} C08L *39/04*

U.S. Cl. 524—88 **5 Claims**

1. A process for the reduction of the particle size of a quinacridone pigment or a phthalocyanine pigment containing statistically up to about one substituent per molecule which comprises dry milling one hundred parts by weight of a crude dry pigment in an apparatus having attrition and shearing action with (a) from about 1.5 to 10 parts by weight of a hydroxylic solvent and (b) from about 2 to 20 parts by weight of a polar polymer, for a period of time sufficient to reduce the particle size of said crude pigment to one micron or less and recovering from said apparatus a dry, free-flowing pigment composition.

4,371,644

PIPERIDINE DERIVATIVES AND THEIR USE AS POLYMER STABILIZERS

Nobuo Soma; Syoji Moromura; Takao Yoshioka, and Tomoyuki Kurumada, all of Hiromachi, Japan, assignors to Sankyo Company Ltd., Tokyo, Japan

Division of Ser. No. 866,957, Jan. 5, 1978, abandoned. This application Jul. 10, 1980, Ser. No. 168,271

Claims priority, application Japan, Jan. 14, 1977, 52-3285

Int. Cl.^{3} C08K *5/34*

U.S. Cl. 524—102 **4 Claims**

1. A stabilized polymer composition comprising a polymer which does not react with hydroxy groups having incorporated therein, in an amount to stabilize it against thermal- and/or photo-deterioration, a piperidine derivative of formula (I):

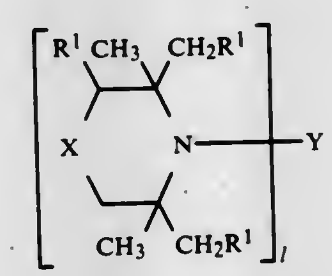

(I)

wherein:

R^1 represents a hydrogen atom or a methyl group;

X represents one of the groups of formula —CH_2—,

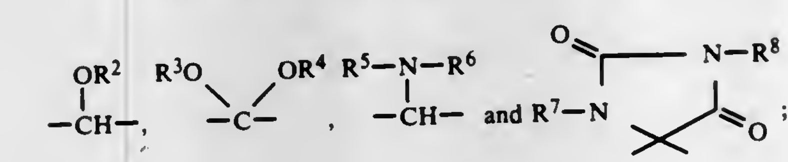

wherein:

R^2 represents a hydrogen atom, an alkyl group having from 1 to 18 carbon atoms, an allyl group, a benzyl group, an aliphatic, aromatic, araliphatic or alicyclic acyl group having up to 18 carbon atoms, wherein the aromatic moiety is unsubstituted or substituted by one or more C_1–C_4 alkyl and/or hydroxy groups, or one of the groups of formula

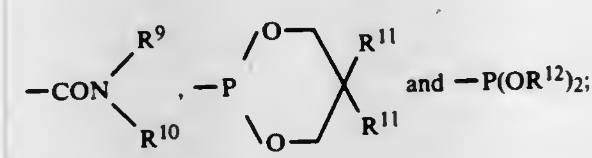

wherein:

R^9 represents a hydrogen atom or an alkyl group having from 1 to 4 carbon atoms;

R^{10} represents an alkyl group having from 1 to 18 carbon atoms, a phenyl group which is optionally substituted by one or more methyl and/or chlorine substituents, a naphthyl group or a cyclohexyl group;

R^{11} represents a hydrogen atom or an alkyl group having from 1 to 4 carbon atoms; and

R^{12} represents an alkyl group having from 1 to 4 carbon atoms, a phenyl group or a group of formula

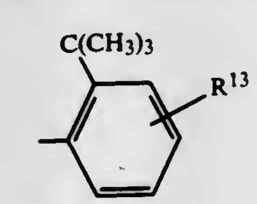

in which R^{13} represents a hydrogen atom or an alkyl group having from 1 to 4 carbon atoms; R^3 and R^4 are the same or different and each represents an alkyl group having from 1 to 4 carbon atoms, or R^3 and R^4 together represent one of the groups of formula

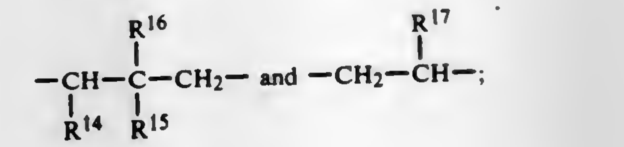

in which:

R^{14} and R^{15} are the same or different and each represents a hydrogen atom or an alkyl group having from 1 to 3 carbon atoms; and

R^{16} and R^{17} are the same or different and each represents a hydrogen atom, an alkyl group having from 1 to 3 carbon atoms or a group of formula —CH_2OR^{18};

in which R^{18} represents a hydrogen atom, an alkyl group having from 1 to 4 carbon atoms, an aliphatic, aromatic, araliphatic or alicyclic acyl group having up to 18 carbon atoms, wherein the aryl moiety is optionally substituted by one or more C_1-C_4 alkyl and/or hydroxy groups, or a group of formula

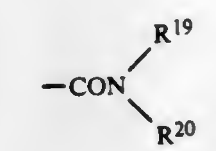

in which R^{19} is any one of the groups hereinbefore defined for R^9 and R^{20} is any one of the groups hereinbefore defined for R^{10};

R^5 represents an alkyl group having from 1 to 18 carbon atoms, a phenyl group which is optionally substituted by one or more C_1-C_4 alkyl and/or alkoxy substituents, a benzyl group or a cyclohexyl group;

R^6 represents an alkyl group having from 1 to 18 carbon atoms, a benzyl group or an aliphatic, aromatic, araliphatic or alicyclic acyl group having up to 18 carbon atoms, in which the aryl moiety optionally has one or more C_1-C_4 alkyl and/or hydroxy substituents; or R^5 and R^6 together represent a tetramethylene group, a pentamethylene group or a group of formula —$(CH_2)_2$—O—$(CH_2)_2$—;

R^7 represents a hydrogen atom, an alkyl group having from 1 to 18 carbon atoms, an allyl group, an acetyl group or a benzyl group; and

R^8 represents an alkyl group having from 1 to 18 carbon atoms, an alkenyl group having 3 or 4 carbon atoms, a benzyl group or a group of formula

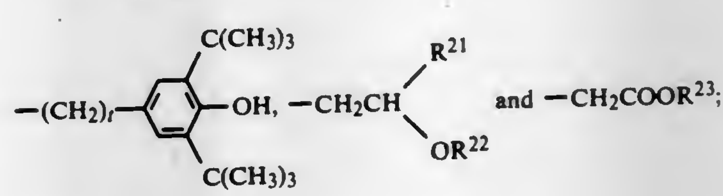

in which:

t represents 1, 2 or 3;

R^{21} represents a hydrogen atom, a methyl group or a phenyl group;

R^{22} represents a hydrogen atom, an alkyl group having from 1 to 8 carbon atoms, an allyl group, a benzyl group or an aliphatic, aromatic, araliphatic or alicyclic acyl group having up to 18 carbon atoms, wherein the aryl moiety optionally has one or more C_1-C_4 alkyl and/or hydroxy substituents; and

R^{23} represents an alkyl group having from 1 to 18 carbon atoms, an alkenyl group having 3 or 4 carbon atoms or a phenyl group;

l represents 2 or 3; and

when l=2:

Y represents one of the groups of formula —CH_2C-

$H(OZ)CH_2\text{-}[OCH_2CH(OZ)CH_2]_2—$, $—CH_2C\text{-}$
$H(OZ)CH_2\text{-}[OCH_2CH(R^{24})]_m—OCH_2CH(OZ)CH_2—$
and $—CH_2CH(OZ)CH_2\text{-}[OWO—CH_2CH(OZ)CH_2]_n—$;
wherein:
m and n each represent integers of from 1 to 10;
R^{24} represents a hydrogen atom or a methyl group;
W represents one of the groups of formulae

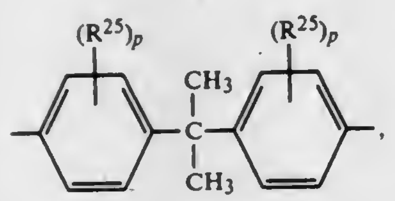

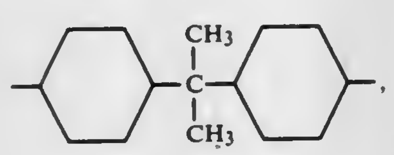

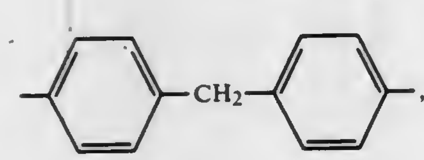 , $—CO—(CH_2)_q—CO—$,

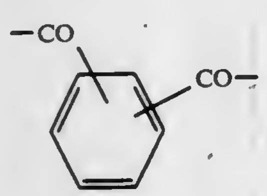 and 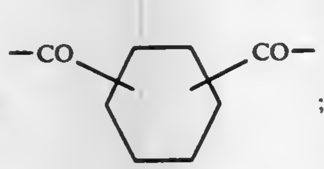 ;

wherein:
p represents 0, 1 or 2;
R^{25} represents a halogen atom; and
q represents an integer of from 1 to 10; and
Z represents any one of the groups defined for R^2;
when l=3:
Y represents one of the groups of formula

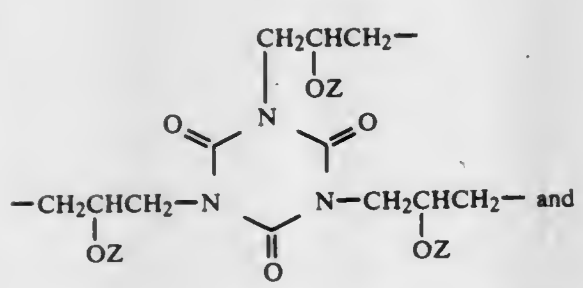 and

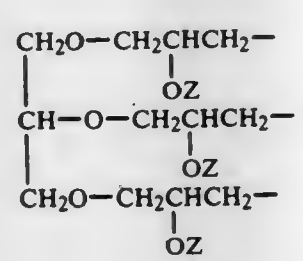 ; in which

in which
Z is as defined above;
or an acid addition salt thereof.

4,371,645
POLYOLEFIN PLASTIC COMPOSITIONS COMPRISING META- OR PAPA-DERIVATIVES (CHORO- OR BROMO-) OF DI-BENZYUIDENE SORBITOL
Robert L. Mahaffey, Jr., Inman, S.C., assignor to Milliken Research Corporation, Spartanburg, S.C.
Continuation of Ser. No. 143,258, Apr. 24, 1980, abandoned. This application Jul. 29, 1981, Ser. No. 288,082
Int. Cl.³ C08L *23/02, 23/04, 23/18;* **C08K** *5/06*
U.S. Cl. 524—108 **9 Claims**
1. A polyolefin plastic composition having improved transparency, which comprises a polymer selected from aliphatic polyolefins and copolymers containing at least one aliphatic olefin and one or more ethylenically unsaturated aliphatic comonomers and at least one di-acetal of sorbitol; said di-acetal of sorbitol having the structure:

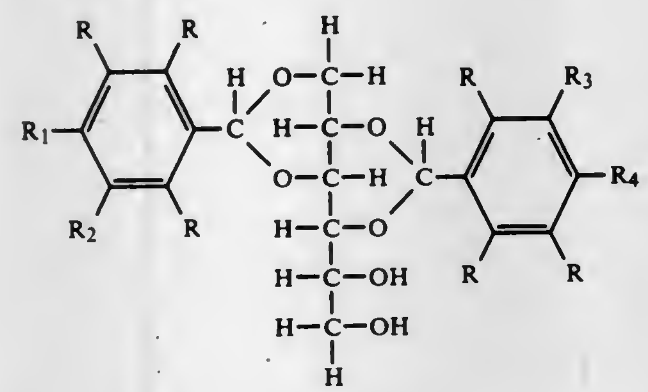

wherein R, R_1, R_2, R_3 and R_4 are selected from hydrogen, lower alkyl, hydroxy, methoxy, mono- and di-alkylamino, amino, nitro and halogen, with the proviso that at least one of R_1, R_2, R_3 and R_4 is chlorine or bromine.

4,371,646
2,6-DI-TERTIARY BUTYL PHENYL PHOSPHITES AND SYNTHETIC RESIN COMPOSITIONS HAVING ENHANCED STABILITY TO HEAT AND LIGHT
Motonobu Minagawa, Kosigaya, and Yutaka Nakahara, Iwatsuki, both of Japan, assignors to Adeka Argus Chemical Co. Ltd., Urawa, Japan
Filed Dec. 29, 1980, Ser. No. 220,405
Claims priority, application Japan, Dec. 26, 1979, 54-170097
Int. Cl.³ C07F *9/145, 9/15;* **C08K** *5/52*
U.S. Cl. 524—119 **30 Claims**
1. 2,6-Di-tertiary butyl phenyl phosphites having the structure:

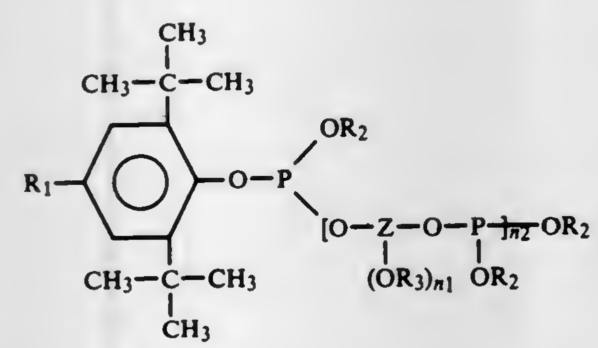

wherein:
R_1 is selected from the group consisting of hydrogen, methyl, ethyl, and $(CH_2)_mCOOR$, where R is selected from the group consisting of alkyl having from one up to about ten carbon atoms; cycloalkyl having from three up to about twelve carbon atoms; alkaryl and aryl having from six to about twelve carbon atoms; and m is a number within the range from 0 to 5;
R_2 is selected from the group consisting of hydrogen, alkyl having from one to about twenty-two carbon atoms; cycloalkyl having from three up to about twelve carbon atoms; alkaryl and aryl having from six to about eighteen

carbon atoms; the residue of a polyhydric alcohol having from two to about eighteen carbon atoms, and from two to three hydroxyl groups; and the residue of a polyphenol having from six to about eighteen carbon atoms and from two to about ten phenolic hydroxyl groups;
R_3 is selected from the group consisting of hydrogen and $P(OR_2)_2$;
Z is the bivalent to tetravalent residue of a polyhydric alcohol having from two to about eighteen carbon atoms, and from two to five hydroxyl groups; or of a polyphenol having from six to about eighteen carbon atoms and from two to about ten phenolic hydroxyl groups;
n_1 is 0 or 1; and n_2 is a number from 1 to 5.

21. A polyvinyl chloride resin composition having improved resistance to deterioration when heated at 350° F., comprising a polyvinyl chloride resin formed at least in part of the recurring group:

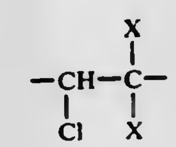

and having a chlorine content in excess of 40%, where X is either hydrogen or chlorine; and a phosphite in accordance with claim **1**.

4,371,647
2,6-DI-TERTIARY BUTYL PHENYL PENTAERYTHRITOL SPIRO BIS-PHOSPHITES ENHANCING THE STABILITY TO HEAT AND LIGHT OF SYNTHETIC RESIN
Motonobu Minagawa, Kosigaya; Yutaka Nakahara, Iwatsuki, and Etsuo Tobita, Tokyo, all of Japan, assignors to Adeka Argus Chemical Co. Ltd., Urawa, Japan
Filed Jan. 7, 1981, Ser. No. 223,051
Claims priority, application Japan, Apr. 28, 1980, 55-56594
Int. Cl.³ C07F *9/15;* **C08K** *5/52;* **C09K** *15/32*
U.S. Cl. 524—120 **51 Claims**
1. 2,6-Di-tertiary butyl phenyl pentaerythritol spiro bis-phosphites having the structure:

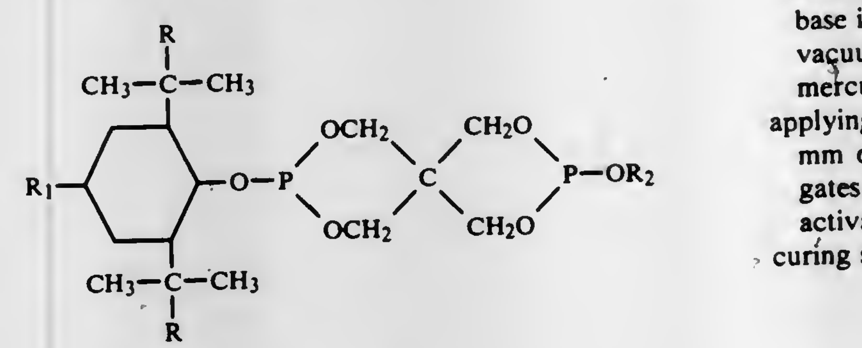

wherein:
R is alkyl having from one to six carbon atoms;
R_1 is methyl or ethyl; and
R_2 is selected from the group consisting of alkyl having from one up to about eighteen carbon atoms; cycloalkyl having from three up to about twelve carbon atoms; and alkaryl and aryl having from six to about thirty carbon atoms; such groups substituted with from one to about four oxy ether-O- and/or carboxylic ester-COO-groups; the residue of a polyhydric alcohol having from two to about eighteen carbon atoms, and from two to about ten hydroxyl groups; and the residue of a polyphenol having from six to about eighteen carbon atoms and from two to about ten phenolic hydroxyl groups.

30. A polyvinyl chloride resin composition having improved resistance to deterioration when heated at 350° F., comprising a polyvinyl chloride resin formed at least in part of the recurring group

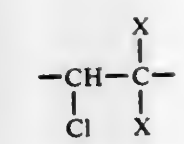

and having a chlorine content in excess of 40%, where X is either hydrogen or chlorine; and a phosphite in accordance with claim **1**.

4,371,648
COMPOSITION CONTAINING FURFURYL ALCOHOL AND USE THEREOF IN FOUNDRY BINDERS
John J. Gardikes, Worthington, and Young D. Kim, Columbus, both of Ohio, assignors to Ashland Oil, Inc., Ashland, Ky.
Filed May 12, 1980, Ser. No. 148,887
Int. Cl.³ B28B *7/34*
U.S. Cl. 523—144 **23 Claims**
1. A composition containing a binder component comprising at least about 20 weight % furfuryl alcohol and an ester of a polyol and a resin acid in an amount of at least about 5% by weight based upon the total of said binder component and ester and a modifying agent for the furfuryl alcohol selected from the group of furan polymers, urea-formaldehyde polymers, or mixtures thereof.

4,371,649
PROCESS FOR BINDING AGGREGATES WITH A VACUUM-ACTIVATED CATALYST
Eduardo Iglesias Hernandez, Carretera Navarra Epele, 39, Hernani (Guipuzcoa), Spain
Filed Jul. 16, 1981, Ser. No. 283,943
Claims priority, application Spain, Jul. 22, 1980, 493.602
Int. Cl.³ C08L *61/14, 61/10*
U.S. Cl. 523—145 **5 Claims**
1. A process of binding aggregates, which comprises:
mixing the aggregates with a resin binder for said aggregates and a vacuum-activated catalyst for curing said binder, said catalyst being an acid neutralized with a base, which base is capable of being eliminated under application of a vacuum to a maximum residual pressure of 300 mm of mercury;
applying a vacuum, to a maximum residual pressure of 300 mm of mercury, to the mixture comprising said aggregates, binder and catalyst, to eliminate said base and thus activate said catalyst; and
curing said binder at a temperature of 50° to 100° C.

4,371,650
FLAME RETARDANT POLYCARBONATES
Niles R. Rosenquist, Evansville, and John A. Tyrell, Mt. Vernon, both of Ind., assignors to General Electric Company, Mt. Vernon, Ind.
Filed Mar. 26, 1981, Ser. No. 247,941
Int. Cl.³ C08K *5/42*
U.S. Cl. 524—162 **10 Claims**
1. A composition which comprises a polymer having a repeating unit

$$\left[Ar-O-\overset{O}{\overset{\|}{C}}-O \right]$$

wherein Ar is an aromatic group, in admixture with a flame retardant effective amount of a mixture of compounds, said mixture comprising at least 2 compounds of the formula

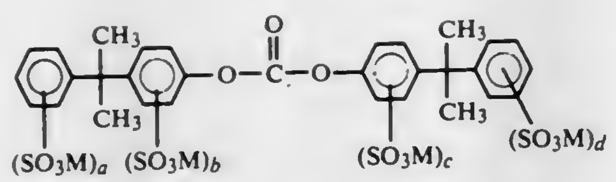

wherein M is an alkali or alkaline earth metal, and a, b, c and d are the same or different and are 0, 1 or 2 with the proviso that at least one of a, b, c or d is 1 or 2.

4,371,651

STABILIZER COMPOSITIONS AND POLYVINYL HALIDE RESIN COMPOSITIONS CONTAINING 1,3-DICARBONYL COMPOUNDS

William E. Leistner, Atlantic Beach, N.Y.; Motonobu Minagawa, Kosigaya, Japan; Kouji Tsuruga, Omiya, Japan, and Masashi Harada, Yokohama, Japan, assignors to Phoenix Chemical Corporation, Atlantic Beach, N.Y.

Filed Jan. 21, 1981, Ser. No. 226,582

Claims priority, application Japan, Aug. 14, 1980, 55-112303

Int. Cl.³ C08K *5/07;* **C09K** *15/06*

U.S. Cl. 524—178 **6 Claims**

1. A polyvinyl halide resin composition having improved resistance to deterioration when heated at 350° F., comprising a polyvinyl halide resin formed at least in part of the recurring group:

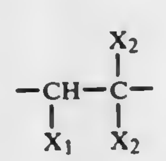

and having a halogen content in excess of 40%, where X_1 is halogen and X_2 is either hydrogen or halogen, and a 1,3-dicarbonyl compound having the formula:

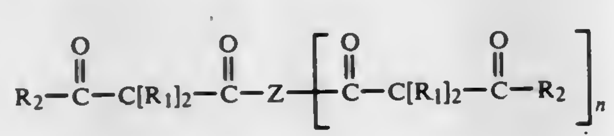

wherein:

R_1 is selected from the group consisting of hydrogen, hydrocarbon groups having from one to about eighteen carbon atoms and such groups substituted with one or more groups selected from the group consisting of halogen, hydroxy, alkoxy OR_1, ester $COOR_1$, alkyl and alkoxycarbonyl alkyl having from one to about eighteen carbon atoms, and

$$-\underset{\underset{O}{\parallel}}{C}R_2;$$

R_2 is selected from the group consisting of hydrocarbon having from one to about eighteen carbon atoms and such groups substituted with one or more groups selected from the group consisting of halogen, hydroxy, alkoxy OR_1, ester $COOR_1$, alkyl and alkoxycarbonyl alkyl having from one to about eighteen carbon atoms;

one R_1 and R_2 may be linked together as an alkylene group to form a cyclic or ring structure;

n is a number from 1 to 3; and

Z is a polyvalent linking radical selected from the group consisting of a direct linkage between the

$$-\underset{\underset{O}{\parallel}}{C}- \text{ groups;}$$

polyvalent hydrocarbon R_3;

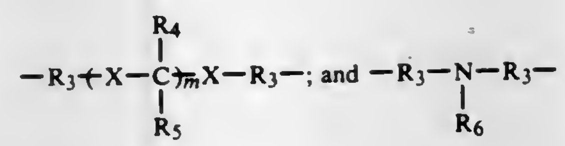

wherein:

R_3 is a polyvalent hydrocarbon group having from one to about eighteen carbon atoms;

R_4 and R_5 are selected from the group consisting of hydrogen and hydrocarbon groups having from one to about eighteen carbon atoms; and R_4 and R_5 may be linked together as an alkylene to form a cyclic or ring structure;

X is —O— or —S—;

m is 0 or 1; and

R_6 is selected from the group consisting of hydrogen, hydrocarbon having from one to about eighteen carbon atoms, and $—R_3—$; or metal and organotin enolate salts of said 1,3-dicarbonyl compounds.

4,371,652

BLEND COMPOUNDS OF SULFONATED POLYMERS AND COMPOSITIONS THEREOF

Pawan K. Agarwal, Westfield, N.J., assignor to Exxon Research and Engineering Co., Florham Park, N.J.

Filed Dec. 21, 1981, Ser. No. 333,128

Int. Cl.³ C08L *23/32*

U.S. Cl. 524—216 **15 Claims**

1. A blend compound which comprises a blend of:

(a) A sulfonated polymer which has about 10 to about 200 meq. of sulfonate groups per 100 grams of said sulfonated polymer, said sulfonate groups being neutralized with a polycaprolactone polymer having the formula:

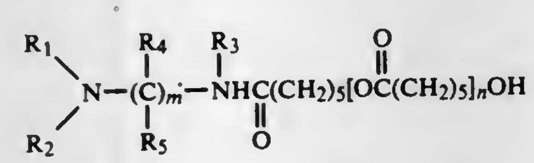

wherein R_1 or R_2 is an alkyl, cycloalkyl or aryl group, R_3, R_4 and R_5 are a hydrogen or alkyl, cycloalkyl, or aryl groups, m equals 1 to 20 and n equals about 1 to about 500; and

(b) acrylate or methacrylate polymer.

4,371,653

METHOD OF IMPROVING THE ELECTRICAL PROPERTIES OF POLYMERIC INSULATIONS CONTAINING POLAR ADDITIVES, AND THE IMPROVED POLYMERIC INSULATION PRODUCT THEREOF

Joseph E. Betts, Westport, Conn., and Fred F. Holub, Schenectady, N.Y., assignors to General Electric Company, New York, N.Y.

Division of Ser. No. 6,713, Jan. 26, 1979, Pat. No. 4,209,566, which is a continuation-in-part of Ser. No. 816,855, Jul. 18, 1977, abandoned. This application Aug. 13, 1979, Ser. No. 66,202

Int. Cl.³ C08K *5/02*

U.S. Cl. 524—268 **2 Claims**

1. A halogen-containing flame retardant comprising the heat reaction product of a halogen-containing organic flame retardant and a heat reactive, liquid silicone polymer comprising the product of a combination of a major amount of difunctional $(CH_3)_2SiO$ monomer units and a minor amount of trifunctional $CH_3SiO_{1.5}$ monomer units.

4,371,654

MOLDING COMPOSITIONS BASED ON ESTER-COMPATIBLE THERMOPLASTIC AND/OR ELASTOMERIC SYNTHETIC RESINS

Paul Spielau, Troisdorf-Eschmar; Horst Vohwinkel, Troisdorf-Eschmar, and Werner Kuhnel, Neunkirchen-Schoneshof, all of Fed. Rep. of Germany, assignors to Dynamit Nobel Aktiengesellschaft, Troisdorf, Fed. Rep. of Germany

Filed Jun. 15, 1981, Ser. No. 273,504

Claims priority, application Fed. Rep. of Germany, Jun. 14, 1980, 3022468

Int. Cl.³ C08K *5/12*

U.S. Cl. 524—296 **17 Claims**

1. A molding composition containing an ester-compatible, vinyl resin and/or elastomeric synthetic resin and characterized in that the molding composition further contains DMT distillation residue formed during the manufacture of dimethyl terephthalate by the Witten process.

4,371,655

POLYMER COMPOSITIONS CONTAINING SULFATE GLASSES OR GLASS-CERAMICS

William J. Kroenke, Brecksville, Ohio, assignor to The B. F. Goodrich Company, Akron, Ohio

Filed Dec. 30, 1981, Ser. No. 335,937

Int. Cl.³ C08L *27/06, 27/08, 33/20*

U.S. Cl. 524—423 **8 Claims**

1. A smoke retared composition comprising:

(A) a smoke retardant amount of finely-divided sulfate glass or sulfate glass-ceramic material or mixture thereof, the said sulfate glass or sulfate glass-ceramic material being comprised of potassium sulfate and zinc sulfate which together form at least 50 mol percent of the glass or glass-ceramic composition, and

(B) at least one polymer selected from the group consisting of vinyl chloride and vinylidene chloride polymers, polychloroprenes, poly(vinyl acetates), and polymers of acrylonitrile alone or with styrene, or mixtures thereof.

4,371,656

METAL SUBSTITUTED ZEOLITES AS STABILIZERS FOR HALOGEN-CONTAINING RESINS

Kohji Kashiwase, Funabashi; Yasuo Machino, Ichikawa; Muneo Mita, Chiba; Tsunenosuke Hiramatsu, Hatogaya; Toshihiko Morishita, Tokyo, and Mitsuo Taniguchi, Funabashi, all of Japan, assignors to Nippon Chemical Industrial Co., Ltd. and Kosei Co., Ltd., both of Tokyo, Japan

Filed Dec. 8, 1980, Ser. No. 214,165

Claims priority, application Japan, Jul. 23, 1980, 55-99835

Int. Cl.³ C08K *3/34;* **C09K** *15/02*

U.S. Cl. 524—443 **17 Claims**

11. A stabilized halogen-containing resin composition comprising a halogen-containing resin and a stabilizer which is a zeolite A substituted with ions of a metallic element belonging to Group II except for zinc or Group IVA of the Periodic Table for Group I (M) metal ion contained in said aluminosilicate and containing 10% by weight or less, as M_2O, of residual Group I metal ions.

4,371,657

CRATER RESISTANT ACRYLIC ENAMEL

David C. Chang, Birmingham, Mich., assignor to E. I. Du Pont de Nemours and Company, Wilmington, Del.

Filed Mar. 4, 1981, Ser. No. 240,573

Int. Cl.³ C08L *61/26*

U.S. Cl. 524—512 **11 Claims**

1. A coating composition comprising about 25–80% by weight of a binder and 20–75% by weight of an organic liquid; wherein the binder comprises

(A) about 40–90% by weight, based on the weight of the binder, of an acrylic polymer having a hydroxyl content about 0.5 to 10% by weight, and consists essentially of an alkyl methacrylate having 1–18 carbon atoms in the alkyl group, an alkyl acrylate having 2–18 carbon atoms in the alkyl group, a hydroxyalkyl acrylate or a hydroxy alkyl methacrylate having 2–4 carbon atoms in the alkyl group up to 5% by weight of an α-β ethylenically unsaturated acid, and contains about 0.5–5% by weight based on the weight of the acrylic polymer, of polymerized perfluorocarbon constituent of the formula

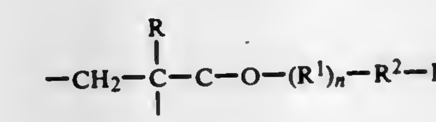

where

R is H or CH_3,

R^1 is an alkyl group containing 2–8 carbon atoms,

n is 0 or 1 and

R^2 is a perfluoroalkyl group containing 4–20 carbon atoms and the polymer has a weight average molecular weight of about 2000–50,000 determined by gel permeation chromatography; and

(B) about 10–60% by weight, based on the weight of the binder, of an alkylated melamine formaldehyde resin.

4,371,658

POLYAMIDE YARN SPIN FINISH CONTAINING A GLYCERIDE AND OXIDIZED POLYETHYLENE

Robert M. Marshall, Chester, and Kimon C. Dardoufas, Richmond, both of Va., assignors to Allied Corporation, Morris Township, Morris County, N.J.

Continuation-in-part of Ser. No. 146,588, May 5, 1980, Pat. No. 4,293,460. This application Mar. 2, 1981, Ser. No. 239,835

The portion of the term of this patent subsequent to Oct. 6, 1998, has been disclaimed.

Int. Cl.³ D06M *13/10, 16/00*

U.S. Cl. 524—585 **46 Claims**

1. A spin finish for application to polyamide yarn, the spin finish having a pH of about 7 to 12 and being an oil in water emulsion, the oil portion of which comprises:

about 24.7 to 65 weight percent of a glyceride having an average molecular weight of between about 600 to about 1,000, having a freezing point of between about −6.7° C. to 23.9° C. and being non-resin forming when exposed to temperatures of up to 210° C. for up to 90 seconds; about 5 to 30 weight percent of ethoxylated oleyl alcohol; about 1 to 10 weight percent of ethoxylated nonyl phenol; about 5 to 30 weight percent of ethoxylated castor oil; about 1 to 7.4 weight percent of an oxidized polyethylene; about 0.2 to 2.0 weight percent of a non-nitrogen nonionic emulsifier for the oxidized polyethylene; and about 0.04 to 0.3 weight percent of an alkali hydroxide.

4,371,659

PREPARATION OF AQUEOUS POLYMER DISPERSIONS HAVING A POLYMER CONTENT OF UP TO 75% BY WEIGHT

Wolfgang Druschke, Dirmstein; Albrecht Kerckow, Wachenheim, and Bernd Stanger, Dudenhofen, all of Fed. Rep. of Germany, assignors to Basf Aktiengesellschaft, Ludwigshafen, Fed. Rep. of Germany

Filed Mar. 20, 1981, Ser. No. 246,058

Claims priority, application Fed. Rep. of Germany, Apr. 10, 1980, 3013812

Int. Cl.³ C08L *35/06*

U.S. Cl. 524—599 **7 Claims**

1. In a process for the preparation of aqueous polymer dis-

persions containing up to 75% by weight of polymer by emulsion copolymerization in the presence of conventional anionic emulsifiers, polymerization initiators and small amounts of polymerization inhibitors at conventional polymerization temperatures, the improvement comprising:

copolymerizing a monomer combination selected from the group consisting of vinyl acetate/styrene, methyl methacrylate/vinyl acetate, vinyl chloride/butadiene, vinyl chloride/styrene, methyl methacrylate/vinyl propionate, vinylidene chloride/butadiene, vinylidene chloride/vinyl acetate and vinylidene chloride/methyl methacrylate mixed with from 60 to 95% by weight, based on the total monomers, of at least one monomer B which is copolymerizable with said monomer combination, in the presence of a polymerization initiator, by the emulsion feed process, under conditions such that (a) the initial aqueous phase at the initiation of monomer emulsion feeding contains from 0.01 to 0.5% by weight, based on the initial charge, of anionic emulsifier and from 1 to 7% by weight, based on the initial charge, of water soluble salts, (b) the monomer emulsion contains from 50 to 500 ppm, based on the total monomers, of polymerization inhibitor, (c) from 1 to 10% by weight of the monomer emulsion is added, within the first ½ hour from initiation of emulsion feeding, at an increasing rate of the initial charge, and thereafter (d) the remaining monomer emulsion is added at a rate sufficient to control the rate of reaction.

4,371,660

ANISOTROPIC MELT PHASE FORMING POLY(ESTER-CARBONATE) DERIVED FROM 6-HYDROXY-2-NAPTHOIC ACID, AROMATIC DIOL, ORGANIC COMPOUND CAPABLE OF FORMING A CARBONATE LINKAGE, AND, OPTIONALLY, OTHER AROMATIC HYDROXY-ACID AND CARBOCYCLIC DICARBOXYLIC ACID

Gordon W. Calundann, North Plainfield, and Anthony J. East, Madison, both of N.J., assignors to Celanese Corporation, New York, N.Y.

Filed Nov. 6, 1981, Ser. No. 319,024
Int. Cl.³ C08G *63/64*
U.S. Cl. 524—601 **43 Claims**

1. A melt-processable poly(ester-carbonate) capable of forming an anisotropic melt phase at a temperature below approximately 400° C. consisting essentially of recurring moieties I, II, III, and, optionally, IV and V wherein:

I is

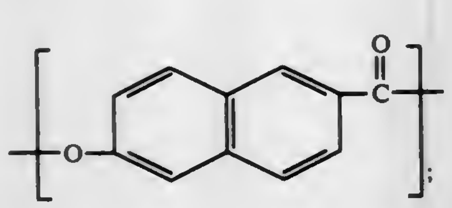

II is O—Ar—O, where Ar is a divalent radical comprising at least one aromatic ring;

III is

$$\left[-\overset{\displaystyle O}{\overset{\|}{C}}-\right];$$

IV is

$$+O-Ar'-\overset{\displaystyle O}{\overset{\|}{C}}+,$$

where Ar′ is a divalent radical comprising at least one aromatic ring, other than 2,6-naphthylene; and

V is

$$\left[-\overset{\displaystyle O}{\overset{\|}{C}}-A-\overset{\displaystyle O}{\overset{\|}{C}}-\right],$$

where A is a divalent carbocyclic radical, wherein at least some of the hydrogen atoms present upon the rings optionally may be replaced by substitution selected from the group consisting of an alkyl group of 1 to 4 carbon atoms, an alkoxy group of 1 to 4 carbon atoms, halogen, phenyl, and mixtures thereof, and wherein moiety I is present in the polymer in a concentration of at lesast approximately 20 mole percent, moiety IV is present in the polymer in a concentration within the range of approximately 0 to 60 mole percent, with the total molar concentration of moieties I and IV in the polymer being within the range of approximately 20 to 80 mole percent, moiety II is present in the polymer in a concentration within the range of approximately 10 to 40 mole percent, moiety III is present in the polymer in a concentration within the range of approximately 10 to 40 mole percent, and moiety V is present in the polymer in a concentration within the range of approximately 0 to 30 mole percent, with the molar concentration of moiety II being substantially equal to the sum of the molar concentrations of moieties III and V.

4,371,661

SEMI-CONTINUOUS PROCESS FOR MAKING STAR-BLOCK COPOLYMERS

Harold L. Nicholson, West Chester, Pa., assignor to Atlantic Richfield Company, Los Angeles, Calif.

Continuation-in-part of Ser. No. 235,243, Feb. 17, 1982, abandoned. This application Mar. 26, 1982, Ser. No. 362,188
Int. Cl.³ C08F *297/04*
U.S. Cl. 525—53 **3 Claims**

1. A semi-continuous process for preparing star-block copolymers of a monovinyl aromatic compound and a conjugated diene in an inert hydrocarbon solvent using an anionic initiator consisting essentially of:

a. charging a first reactor with the solvent and all of the initiator and heating to 70° to 85° C. followed by the addition of, in 3 equal portions, over a period of from 6 to 15 minutes, all of the monovinyl aromatic compound while maintaining the reactor at polymerization temperature to insure complete polymerization of the monovinyl aromatic compound to form blocks of formula A—Li where A is a block of polyvinyl aromatic compound;
b. transferring the contents to a second reactor and charging all of the conjugated diene in 3 equal portions over a period of 27 to 55 minutes while maintaining said second reactor at a temperature of from 65° to 80° C. to insure complete polymerization of the diene to form chains of formula A-B-Li where B is a block of polydiene;
c. transferring the contents of said second reactor to a third reactor and charging 0.6 to 3.5 parts by weight of coupling agent per 100 parts by weight of total monomer and allowing to couple at 70°-80° C. for 30 to 60 minutes to form star-block copolymer having formula $(A—B)_m—X$ where A and B are block segments, as above, m is an integer between 3 and 20, and X is the radical of a polyfunctional coupling agent;
d. transferring the contents of said third reactor to a fourth reactor, terminating the polymerization by the addition of methanol, adding stabilizers and recovering the polymer by extrusion into polymer pellets; and
e. repeating steps a–d as soon as each reactor is emptied into the succeeding reactor.

4,371,662

THREE-COMPONENT RESIN COMPOSITIONS HAVING IMPROVED COATING PROPERTIES

Fumihiro Tone, and Toshihiko Fujishima, both of Sodegaura, Japan, assignors to Idemitsu Petrochemical Co., Ltd., Tokyo, Japan

Filed Aug. 19, 1981, Ser. No. 294,399
Claims priority, application Japan, Sep. 1, 1980, 55/119696; Sep. 13, 1980, 55/127539; Sep. 13, 1980, 55/127540
Int. Cl.³ C08L *23/16, 53/02, 53/00*
U.S. Cl. 525—89 **7 Claims**

1. A resin composition having improved coating properties which comprises (A) 67 to 91% by weight of an ethylene-propylene block copolymer, (B) 33 to 9% by weight of an ethylene-propylene rubber having a Mooney viscosity (ML_{1+4}, 100° C.) of 18 to 34, and (C) 3 to 15 parts by weight of a styrene-based elastomer selected from the group consisting of styrene-butadiene-styrene block copolymers, styrene-isoprene-styrene block copolymers, and styrene-ethylene-butylene-styrene block copolymers, per 100 parts by weight of the total of Components (A) and (B).

4,371,663

PHYSICALLY-AMELIORATED STYRENE POLYMER/THERMOPLASTIC ELASTOMER POLYBLENDS

Robert J. Russell, Midland, Mich., assignor to The Dow Chemical Company, Midland, Mich.

Filed Nov. 30, 1979, Ser. No. 99,177
Int. Cl.³ C08L *53/00*
U.S. Cl. 525—95 **25 Claims**

1. A polyblended composition or polyblend particularly well characterized in having outstanding environmental stress crack resistance comprising, in intimate admixture:

(a) a styrene polymer containing polymerized therein at least about 60 percent by weight, of at least one alkenyl aromatic monomer of the Formula:

$$CH_2{=}CGAr, \qquad \text{(I)}$$

wherein G is selected from the group consisting of hydrogen and methyl and Ar is an aromatic radical, selected from the group consisting of benzene alkyl, and halo-ring-substituted aromatic units of from 6 to about 10 carbon atoms, with any balance of unsaturated material copolymerized with the Formula (I) monomer is said styrene polymer being at least one other ethylenically-unsaturated material that is copolymerizable with styrene; and

(b) a thermoplastic rubbery elastomer block copolymer which is comprised of:
at least one elastomer block of synthetic rubber connected to
at least one styrene polymer block, the styrene polymer of said block being hereinbefore defined;
said thermoplastic rubbery elastomer block copolymer being comprised of at least about 20 weight percent of said elastomer block with the balance being said styrene polymer block;
the styrene polymer and the elastomer block copolymer together containing at least about 40 weight percent of the styrene polymer therein with the balance being said thermoplastic elastomer block copolymer;

(c) between about 50 and about 1,000 parts per million by weight based on total polyblend composition weight of a thermally-activatable, peroxy oxygen-containing organic peroxide which is miscible in and with said styrene polymer and block copolymer which has in its general structure at least one of the characterizing linkage units of the Formula:

$$—O—O—, \qquad \text{(III)}$$

wherein the entire organic peroxide contains from 2 to about 30 carbon atoms in its general structure and is thermally decomposable at a temperature in the range that is greater than about 100° C. less than that at which thermal degradation of the involved styrene polymer block copolymer occurs, the peroxy oxygen containing organic peroxide being present in a crosslink promoting effectively reactive quantity

(d) at least one material that is inter-reactive with the rubber elastomer constituent in said styrene polymer block copolymer polyblends under influence of said peroxide, which material is selected from the group consisting of:

(d.1) an alkenyl aromatic monomer of Formula (I) and mixtures thereof incorporated in the polyblend composition in an amount between about 0.5 and about 3 weight percent.

4,371,664

VINYL RESIN COMPOSITION CONTAINING SILYL GROUPS

Yasushi Kato, and Hisao Furukawa, both of Kobe, Japan, assignors to Kanegafuchi Kagaku Kogyo Kabushiki Kaisha, Osaka, Japan

Filed Sep. 16, 1981, Ser. No. 302,546
Claims priority, application Japan, Sep. 19, 1980, 55-131146
Int. Cl.³ C08F *8/00*
U.S. Cl. 525—100 **18 Claims**

1. A composition comprising 100 parts by weight of a vinyl resin having a backbone chain composed substantially of a vinyl polymer, including in each molecule at least one silyl group of which silicon links to a hydrolyzable group or groups, and containing 0.1 to 20% by weight of a carboxylic acid amide having a polymerizable group as a component of the polymer and 0.01 to 10 parts by weight of a curing catalyst.

4,371,665

MODIFIED EPOXY RESIN COMPOSITION

Minoru Hino, Takatsuki, and Takao Oshima, Otsu, both of Japan, assignors to Sumitomo Chemical Company, Limited, Osaka and Tohto Kasei Co., Ltd., Tokyo, both of, Japan

Filed Dec. 22, 1981, Ser. No. 333,454
Claims priority, application Japan, Dec. 29, 1980, 55-185573
Int. Cl.³ C08L *63/00*
U.S. Cl. 525—109 **6 Claims**

1. A modified epoxy resin composition, which comprises an epoxy resin and a modified adduct [D] of a conjugated diene polymer or copolymer which has an imido bond and/or amido bond and a semi-ester structure and has an acid value owing to a free carboxyl group of 5 to 100, said modified adduct being obtained by reacting an adduct [A] of a polymer of a conjugated diene having a number average molecular weight of 300 to 20,000 or a copolymer of the conjugated diene and vinyl monomer with an α,β-unsaturated dicarboxylic acid or its anhydride, with a compound [B] of the formula:

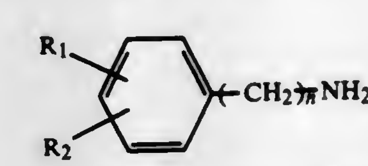

[I]

wherein R_1 and R_2 are the same or different and are each hydrogen, an alkyl having 1 to 5 carbon atoms, a halogen, cyano, hydroxy, thiol, methoxy, $—CONH_2$, $—COCH_3$, $—COOCH_3$, or $—N(CH_3)_2$, and n is an integer of 0 to 3, and a compound [C] of the formula:

$$R_3{+}CH_2{+}_mOH \qquad \text{[II]}$$

wherein R_3 is a saturated or unsaturated hydrocarbon group having 1 to 18 carbon atoms; a saturated or unsaturated hydrocarbon having 1 to 12 carbon atoms and containing cyano, a halogen, an ether bond, an ester bond or a hydroxy group which bonds to a secondary or tertiary carbon; a saturated

alcohol residue having 1 to 8 carbon atoms; acrylic acid residue; and m is an integer of from 0 to 3.

4,371,666
COMPATIBLE BLENDS OF CHLORINATED POLYVINYL CHLORIDE RESINS AND STYRENE-MALEIC ANHYDRIDE RESINS

Larry G. Bourland, Downington, Pa., assignor to Atlantic Richfield Company, Los Angeles, Calif.
Filed Aug. 17, 1981, Ser. No. 293,562
Int. Cl.³ C08L *25/08, 27/24*
U.S. Cl. 525—207 **11 Claims**

1. A compatible blend of thermoplastic polymers consisting assentially of: (a) from 1-99 percent by weight of a chlorinated polyvinyl chloride resin; and (b) from 1-99 percent by weight of a copolymer consisting of a vinyl aromatic monomer and an ethylenically unsaturated dicarboxylic acid monomer; said blend having a heat distortion temperature in excesss of 200° F., and a single glass transition property.

4,371,667
BAKING LACQUER

Dieter Möller, Ascheberg, and Ulrich Poth, Münster, both of Fed. Rep. of Germany, assignors to BASF Farben & Fasern AG, Hamburg, Fed. Rep. of Germany
Filed Jun. 2, 1981, Ser. No. 269,531
Claims priority, application Fed. Rep. of Germany, Jun. 20, 1980, 3022996
Int. Cl.³ C08L *37/00, 41/00*
U.S. Cl. 525—208 **6 Claims**

1. In a liquid coating composition having as the essential organic film-forming component thereof, a heat-curable mixture of:

A. an organic solvent-soluble acidic copolymer of a plurality of polymerizable alpha,beta-monoethylenically unsaturated monomers consisting essentially of
 (1) at least one member selected from the group consisting of alpha,beta-monoethylenically unsaturated hydrocarbons;
 (2) alkanol esters of alpha,beta-monoethylenically unsaturated monocarboxylic acids; and
 (3) an alpha,beta-monoethylenically unsaturated carboxylic acid having from one to two—COOH moieties per molecule in a proportion sufficient to provide said acidic polymer with a carboxylic acid number in the range of 10 to 150; and

B. an organic solvent-soluble epoxy functional copolymer of a plurality of polymerizable alpha,beta-monoethylenically unsaturated monomers;

the improvement comprising:
 (1) said acidic copolymer (A), wherein 1000 g thereof contain 0.5 to 3 moles of alpha,beta-monoethylenically unsaturated carboxylic acid and 0.6 to 2 moles of alpha,beta-monoethylenically unsaturated carboxylic acid monomer units esterified with a structure selected from the group consisting of:

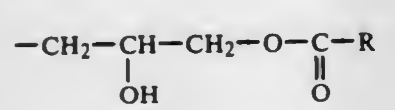

or

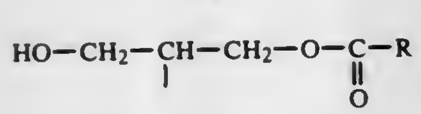

wherein R is a saturated or unsaturated aliphatic hydrocarbon radical having 1 to 26 carbon atoms, or a branched chain of the formula

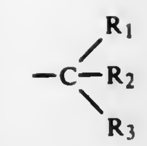

where R_1, R_2 and R_3 are an H atom or saturated or unsaturated aliphatic hydrocarbon radicals having a straight chain of 1 to 12 carbon atoms; and
 (2) said epoxy functional polymer (B) is a copolymer of at least one member selected from the group consisting of alpha,beta-monoethylenically unsaturated hydrocarbons, alkanol esters of alpha,beta-monoethylenically unsaturated monocarboxylic acids, and glycidyl esters of alpha,-beta-monoethylenically unsaturated monocarboxylic acids in sufficient proportion to provide said epoxy copolymer with an epoxy equivalent weight of from 120 to 2000; and
 (3) the relative proportions of said acidic copolymer (A) and said epoxy copolymer (B) are 0.5 to 1.5 carboxylic groups of the copolymer (A) per epoxy group of the copolymer (B); and
 (4) said heat-curable mixture is in solution in a volatile liquid comprising an organic solvent therefor.

4,371,668
RUBBER COMPOUND CAPABLE OF GIVING A VULCANIZED RUBBER HAVING A HIGH MODULUS OF ELASTICITY

Hiroharu Ikeda, Machida, and Yasuyuki Shimozato, Yokohama, both of Japan, assignors to Japan Synthetic Rubber Co., Ltd., Tokyo, Japan
Division of Ser. No. 37,778, May 10, 1979, Pat. No. 4,281,085. This application Mar. 9, 1981, Ser. No. 242,031
Claims priority, application Japan, May 12, 1978, 53-55526; Feb. 14, 1979, 54-14958
Int. Cl.³ C08F *126/00, 126/06*
U.S. Cl. 525—133 **17 Claims**

1. A rubber compound, which comprises:
(I) 100 parts by weight of a rubber component,
(II) 0.1-15 parts by weight of an amine salt of a carboxylic acid, and
(III) 0-7 parts by weight of sulfur; said rubber component (I) comprising:
 (A) at least 40% by weight of an elastomeric copolymer composed of from 80-99.5% by weight of a monomer mixture of a C_4 or C_5 conjugated diene and styrene and from 0.5-20% by weight of a glycidyl group containing monomer, with the total amount of the conjugated diene in said copolymer being at least 50% by weight; and
 (B) 60% by weight or less of a vulcanizable rubber selected from the group consisting of natural rubber, polyisoprene, polybutadiene, styrene-butadiene rubber, ethylene-propylene rubber, butyl rubber, chloroprene rubber and nitrile rubber.

4,371,669
POLYMERS HAVING IMPROVED WATER RESISTANCE AND MONOMERS FOR SAME

Stamatios G. Mylonakis, Barrington, and Anthony J. Tortorello, Elmhurst, both of Ill., assignors to DeSoto, Inc., Des Plaines, Ill.
Division of Ser. No. 11,701, Feb. 12, 1979, Pat. No. 4,275,229. This application Dec. 29, 1980, Ser. No. 220,268
Int. Cl.³ C08F *16/36*
U.S. Cl. 526—311 **10 Claims**

1. A carboxy functional, addition copolymer prepared from a first monoethylenically unsaturated monomer having the formula:

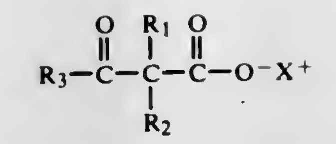

wherein R_1 is selected from the group consisting of hydrogen and C_1-C_8 alkyl;
R_2 is selected from the group consisting of hydrogen, C_1-C_8 alkyl and a vinyl-containing radical;
R_3 is selected from the group consisting of C_1-C_8 alkyl; a vinyl containing radical; O-R_4 where R_4 is hydrogen, C_1-C_8 alkyl or X^+; and NR_5R_6 where R_5 and R_6, are hydrogen or C_1-C_8 alkyl; and one of R_2 or R_3 is a vinyl containing radical; and
X^+ is selected from the group consisting of the proton, protonated ammonia, protonated amines, and mixtures thereof; and
at least a second monethylenically unsaturated monomer copolymerizable therewith, the vinyl containing radical referred to for components R_2 and R_3 being selected from the group consisting of vinyl benzyl, allyl, allyl derivatives of allyl alcohol or allylamines, vinyl, acrylyloxy and methacrylyloxy.

4,371,670
COPOLYMERS HAVING A BACKBONE OF ALTERNATING POLYMER BLOCKS AND SILICON UNITS

Le-Khac Bi, West Chester, Pa., assignor to Atlantic Richfield Company, Los Angeles, Calif.
Filed Feb. 26, 1981, Ser. No. 238,297
Int. Cl.³ C08L *83/00*
U.S. Cl. 525—342 **9 Claims**

1. An alternating copolymer having the formula

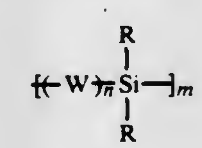

wherein each R separately represents hydrogen, a (C_1 to C_4) alkyl group or a phenyl group; W represents at least one monomer selected from the group consisting of dienes, styrenes, vinylidene chloride, vinyl esters, acrylic and methacrylic esters and acrylonitrile; n represents an integer from 2 to 300; and, m represents an integer from 2 to 50 and wherein said copolymer is solid.

4,371,671
CONTROLLED, ELEVATED PRESSURE DEHYDRATION OF POLY(ARYLENE SULFIDE) PREPOLYMERIZATION MIXTURE

Kenneth L. Anderson, Bartlesville, Okla., assignor to Phillips Petroleum Company, Bartlesville, Okla.
Filed Sep. 1, 1981, Ser. No. 298,441
Int. Cl.³ C08G *75/14*
U.S. Cl. 528—388 **12 Claims**

1. A method in the preparation of poly(arylene sulfide) for dehydrating pre-polymerization mixtures comprising a reaction mixture of a sulfur source and an organic amide, said method comprising:
 (a) contacting a reaction mixture comprising a sulfur source and an organic amide at an essentially constant pressure within a range of about 4 psig to about 40 psig and a first temperature in the range of about 300° F. to about 400° F. for a time sufficient for formation of a complex of the reactants, and subsequently
 (b) maintaining the essentially constant pressure while over a period of time raising the temperature to a second temperature, at which, at said essentially constant pressure, essentially all water is removed from the mixture.

4,371,672
THERMOPLASTIC MOLDING COMPOSITION

Usama E. Younes, West Chester, Pa., assignor to Atlantic Richfield Company, Los Angeles, Calif.
Filed Dec. 10, 1981, Ser. No. 329,158
Int. Cl.³ C08G *65/48;* **C08L** *71/04*
U.S. Cl. 525—391 **2 Claims**

1. A thermoplastic molding composition comprising two thermoplastic polymers which are at least partially miscible in one another, one polymer being polyphenylene oxide and the other polymer being an alternating copolymer having the formula:

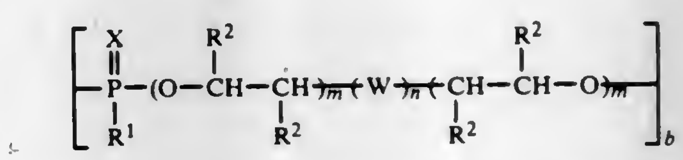

wherein R^1 represents a halogen, a (C_1 to C_{10}) alkyl or halogenated (C_1 to C_{10}) alkyl group, hydroxy, a (C_1 to C_{10}) alkoxy or halogenated (C_1 to C_{10}) alkoxy group, an aryl or halogenated aryl group, and an aryloxy or halogenated aryloxy group; X may or may not be present and represents oxygen or sulfur; W represents at least one monomer selected from the group consisting of dienes, styrenes, vinylidene chloride, vinyl esters, and acrylonitrile; each R^2 separately represents hydrogen, a (C_1 to C_4) alkyl group, or an aryl group; n represents an integer equal to or greater than 2; each m separately represents an integer from 1 to 20, and b represents an integer from 2 to 1000.

4,371,673
WATER SOLUBLE FORMS OF RETINOIDS

Josef Pitha, Baltimore, Md., assignor to The United States of America as represented by the Secretary of the Department of Health and Human Services, Washington, D.C.
Filed Jul. 21, 1980, Ser. No. 170,570
Int. Cl.³ C08G *69/48;* **C08B** *37/16*
U.S. Cl. 525—426 **21 Claims**

1. A water soluble material comprising a cyclodextrin complex of the product formed by the reaction of a polymer and a retinoid, wherein said polymer contains polar or ionic functional groups.

4,371,674
WATER SOLUBLE CROSSLINKED ETHYLENEIMINE GRAFTED POLYAMIDOAMINE

Otto Hertel, 68 Koenigsbacher Strasse; Emil Scharf, 51 Mohnstrasse; Jaroslav Melzer, 116 Kirchenstrasse, and Rolf Fikentscher, 27 Von-Stephan-Strasse, all of 6700 Ludwigshafen, Fed. Rep. of Germany
Filed Jul. 30, 1980, Ser. No. 173,479
Claims priority, application Fed. Rep. of Germany, Aug. 29, 1979, 2934854
Int. Cl.³ C08G *69/48*
U.S. Cl. 525—435 **2 Claims**

1. An improved process for the preparation of a water-soluble papermaking auxiliary, to be used as a drainage aid, flocculant, or retention aid, comprising reacting
 (a) 1 part by weight of a polyamidoamine, obtained by condensing 1 mole of a dicarboxylic acid of 4 to 10 carbon atoms with 0.8-1.4 moles of a polyalkylenepolyamine having 3-10 alkyleneimine units to give a primary product followed by grafting from 2 to 8 ethyleneimine units per basic nitrogen of the primary product onto the primary product in the presence of a catalyst selected from the group consisting of acids, Lewis acids, and compounds which generate an acid during said grafting, with

(b) 0.1–4 parts by weight of a crosslinking agent at above 20° C. in aqueous solution or in a water-soluble organic solvent to give said auxiliary, the reaction being continued until the viscosity of an aqueous solution containing 20% by weight of the auxiliary is from 300 to 2,500 milliPascal seconds,

wherein the crosslinking agent is an α,ω-dichloropolyalkylene oxide obtained by reacting a polyalkylene oxide containing 8–100 alkylene oxide units with a compound selected from the group consisting of thionyl chloride and phosgene to give a reaction product and then cleaving the reaction product by heating the reaction product at from 70° to 150° C. in the presence of a tertiary amine catalyst.

4,371,675

PROCESS FOR PREPARATION OF MODIFIED AROMATIC HYDROCARBON RESIN

Akira Miyamoto, Hiratsuka; Masayoshi Maeda, Nishinomiya, and Yoshitaka Yamagishi, Hiratsuka, all of Japan, assignors to Mitsubishi Gas Chemical Company, Inc., Tokyo, Japan

Filed Apr. 21, 1981, Ser. No. 256,136
Claims priority, application Japan, Apr. 28, 1980, 55/56743
Int. Cl.³ C08G *10/04;* **C08J** *3/00*
U.S. Cl. 525—472 **8 Claims**

1. In a process for the preparation of a modified aromatic hydrocarbon resin by reacting an aromatic hydrocarbon-formaldehyde resin with an unsaturated polybasic acid or an anhydride thereof, optionally together with a saturated polybasic acid or an anhydride thereof, the improvement which comprises reacting 10 to 35 parts by weight of an unsaturated polybasic acid or an anhydride thereof with 100 parts by weight of an aromatic hydrocarbon-formaldehyde resin in the presence of 5 to 50 parts by weight of water or water and aliphatic alcohol per 100 parts by weight of the aromatic hydrocarbon-formaldehyde resin, while removing formaldehyde solution formed by the reaction to the outside of the reaction system during the reaction by raising the temperature to 190° to 220° C. for at least one hour.

4,371,676

PREPARATION OF CYCLOPENTADIENE/ACETYLENICALLY UNSATURATED COMPOUND COPOLYMERS

Richard Hoene, Heidelberg, Fed. Rep. of Germany, assignor to BASF Aktiengesellschaft, Fed. Rep. of Germany

Filed Apr. 7, 1981, Ser. No. 251,920
Claims priority, application Fed. Rep. of Germany, May 8, 1980, 3017619
Int. Cl.³ C08F *38/00, 36/00*
U.S. Cl. 526—76 **3 Claims**

1. A process for the preparation of a cyclopentadiene copolymer which comprises: polymerizing

(a) from 10 to 99% by weight of cyclopentadiene, dicyclopentadiene, tricyclopentadiene, their C_1–C_3-alkyl derivatives or co-dimers of cyclopentadiene with a diene of 4 or 5 carbon atoms,

(b) from 1 to 50% by weight of at least one acetylenically unsaturated compound which in addition to one or more alkynyl groups contains one or more hydroxyl, amino, carboxyl, aldehyde, alkyl, aryl or aralkyl groups or halogen atoms and

(c) from 0 to 40% by weight of other copolymerizable olefinically unsaturated monomers,

at a temperature of from 200° to 320° C., either thermally or with addition of a source of free radicals, the sum of the percentages (a), (b) and (c) being 100.

4,371,677

PROCESS FOR MAKING DISPERSION COPOLYMERS THROUGH MONOMER METERING

Marion G. Morningstar, Avon Lake, and Thomas J. Doyle, Lorain, both of Ohio, assignors to The B.F. Goodrich Company, Akron, Ohio

Filed Sep. 14, 1981, Ser. No. 301,618
Int. Cl.³ C08K *5/05*
U.S. Cl. 526—80 **20 Claims**

1. A process for producing vinyl dispersion copolymers of vinyl and vinylidene halides with a comonomer selected from the group consisting of acrylic acid, methacrylic acid, esters of acrylic acid, and esters of methacrylic acid, comprising forming a monomer premix containing a vinyl or vinylidene halide, the aqueous reaction medium, from about 0.02% to about 0.4% by weight of a free radical yielding initiator(s) based on the weight of 100 parts of monomer being copolymerized, at least one emulsifier, and at least one long straight chain saturated alcohol containing from 8 to 24 carbon atoms, the ratio of alcohol to emulsifier being in the range of about 0.25 to about 2.5, homogenizing said premix below the reactivity of the catalyst(s) employed, passing said homogenized premix to a reaction zone, emulsion polymerizing said homogenized premix in said zone at a temperature in the range of about 35° C. to about 60° C., metering said comonomer into said reaction zone during the polymerization reaction, said metering being substantially stopped prior to about 2 hours prior to the completion of the reaction, and thereafter recovering the copolymer.

4,371,678

PROCESS FOR RAPIDLY TERMINATING THE POLYMERIZATION OF VINYL CHLORIDE IN AQUEOUS SUSPENSION

Stephane Noël, Grimbergen, Belgium, assignor to Solvay & Cie., Brussels, Belgium

Filed Jun. 4, 1981, Ser. No. 270,581
Claims priority, application France, Jun. 5, 1980, 80 12724
Int. Cl.³ C08F *2/42, 2/20*
U.S. Cl. 526—83 **5 Claims**

1. Process for rapidly terminating the polymerisation of vinyl chloride in aqueous suspension in the presence of a lower dialkyl peroxydicarbonate, comprising introducing into the aqueous suspension amounts of ammonium hydroxide and a thiosulfate of an alkali of metal or ammonium sufficient to effectively terminate the polymerisation.

4,371,679

PROCESS FOR PREPARING POLYOLEFINS

Nobuyuki Kuroda, Yokohama; Akira Sano, Kawasaki; Toru Nakamura, Kawasaki; Kazuo Matsuura, Kawasaki, and Mituji Miyoshi, Kanagawa, all of Japan, assignors to Nippon Oil Company, Ltd., Tokyo, Japan

Continuation of Ser. No. 45,859, Jun. 6, 1979, abandoned. This application Jan. 28, 1981, Ser. No. 229,167
Claims priority, application Japan, Jun. 21, 1978, 53-74171
Int. Cl.³ C08F *4/02, 4/64, 4/58*
U.S. Cl. 526—116 **15 Claims**

1. A process for the preparation of polyolefins by polymerizing olefins using a titanium containing solid component together with an organometallic compound, said solid component comprising a substance obtained by copulverizing (1) magnesium halide, maganese halide or mixtures thereof, (2) an organic halide compound which is a saturated or unsaturated aliphatic or aromatic hydrocarbon in which at least one of the hydrogens is substituted with halogen, (3) a chain or cyclic silicone compound with recurring structural units represented by the general formula:

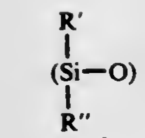

wherein R′ and R″ respectively represent hydrogen, alkyl, aryl, alkoxy, or hydroxyl groups and (4) a tetravalent or trivalent titanium compound or mixtures thereof; the weight ratio of magnesium halide, maganese halide or mixtures thereof to organic halide being from 0.5:0.01 to 1:0.01; the weight ratio of magnesium halide, manganese halide or mixtures thereof to silicone compound being from 1:0.5 to 1:0.005; the amount of titanium compound in the solid component being from 0.5 to 10% by weight; said organometallic compound being selected from the group consisting of organoaluminum compounds of the general formulae R_3Al, R_2AlX, $RAlX_2$, R_2AlOR, $RAl(OR)X$ and $R_3Al_2X_3$ wherein R which may be the same or different in a specific compound is an alkyl or aryl group and X is a halogen atom, and organozinc compounds of the general formula R_2Zn wherein R which may be the same or different in a specific compound is an alkyl group.

4,371,680

POLYMER COMPOSITION

Warren N. Baxter, Orange, Tex.; Nicholas G. Merckling, deceased, late of Wilmington, Del.; by Noelle K. Masukawa, administratrix, Wauwatosa, Wis.; Ivan M. Robinson, Wilmington, and Gelu S. Stamatoff, Newark, both of Del., assignors to E. I. Du Pont de Nemours & Company, Wilmington, Del.

Division of Ser. No. 556,548, Dec. 30, 1955, abandoned, Continuation-in-part of Ser. No. 451,064, Aug. 19, 1954, abandoned, and Ser. No. 517,398, Jun. 22, 1955, abandoned. This application Jan. 22, 1968, Ser. No. 708,718
Int. Cl.³ C08F *4/64, 4/68, 210/02*
U.S. Cl. 526—159 **3 Claims**

1. A process which comprises interpolymerizing monomers comprising ethylene and propylene in the presence of a polymerization catalyst formed by mixing an organometal compound consisting of a metal alkyl or metal aryl of a metal selected from the group consisting of metals of Groups II and III of the Periodic System; zinc metal or metals above zinc in the electromotive series with a compound, other than the oxide, of a metal selected from the group consisting of titanium, zirconium, vanadium, tantalum, chromium, molybdenum, and tungsten, and recovering the solid polymer formed.

4,371,681

BROMINE CONTAINING ALLYLCARBONATES

Aaron Liebersohn, Derech Mazada 95, Beer Sheva, Israel

Filed Oct. 29, 1981, Ser. No. 316,412
Claims priority, application Israel, Nov. 21, 1980, 61529
Int. Cl.³ C08L *85/00, 69/00*
U.S. Cl. 526—295 **7 Claims**

1. Compounds of the formula

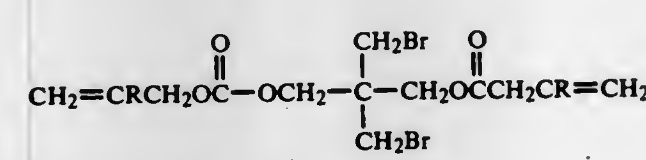

wherein R is —H or —CH_3.

4,371,682

ROOM TEMPERATURE CURABLE POLYORGANOSILOXANE COMPOSITION AND METHOD

Mitsuyoshi Hashimoto, Ojima, Japan, assignor to Toshiba Silicones, Ltd., Japan

Filed Jun. 17, 1981, Ser. No. 274,617
Claims priority, application Japan, Jun. 17, 1980, 55-81999
Int. Cl.³ C08G *77/04*
U.S. Cl. 528—34 **22 Claims**

1. A room temperature curing polyorganosiloxane composition comprising: (A) 100 parts by weight of a silanol-terminated polydiorganosiloxane having a viscosity of 500 to 200,000 centistokes at 25° C., (B) 0.5–25 parts by weight of an oxime radical-methoxyl radical exchange reaction product obtained from:

(1) an oxime radical-containing organosilicon compound selected from the group consisting of oxime radical-containing silanes of the general formula:

$R_a^1Si(ON{=}Q)_{4-a}$

wherein R^1 represents a substituted or unsubstituted monovalent hydrocarbon radical, =Q represents a bivalent radical of the formula:

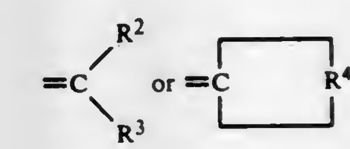

R^2 and R^3 respectively represent a monovalent radical selected from the group consisting of hydrogen atoms and substituted or unsubstituted monovalent hydrocarbon radicals, R^4 represents an alkylene radical of 4 to 6 carbon atoms, and a represents a number of 0 or 1 and partially hydrolyzed condensates thereof, and (2) a methoxyl radical-containing organosilicon compound selected from the group consisting of methoxyl radical-containing silanes of the general formula:

$R_b^5Si(OCH_3)_{4-b}$

wherein R^5 represents a substituted or unsubstituted monovalent hydrocarbon radical, and b represents a number of 0 or 1 and partially hydrolyzed condensates thereof, in such amounts that a molar ratio of the oxime radical bonded with the silicon atom will be 1:(0.2–2.0); and

(C) 0.01 to 10 parts by weight of a catalyst for promoting the reaction of (A) and (B).

4,371,683

HARDENABLE ADHESIVE

Jürgen Fock, Düsseldorf; Dietmar Schedlitzki, Essen; Ulrich Holtschmidt, Essen, and Wilhelm Ahrens, Essen, all of Fed. Rep. of Germany, assignors to Th. Goldschmidt AG, Essen, Fed. Rep. of Germany

Filed Mar. 10, 1982, Ser. No. 356,292
Claims priority, application Fed. Rep. of Germany, Apr. 1, 1981, 3113014
Int. Cl.³ C08G *18/48*
U.S. Cl. 528—60 **11 Claims**

1. A hardenable adhesive comprising at least one polyol, one polyisocyanate or their prepolymers wherein the polyol is the reaction product of a novolak of average molecular weight from 300 to 1200 with an oxirane having the general formula

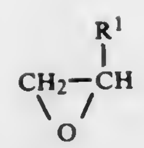

in which R^1 is hydrogen, a halogenated hydrocarbon group with 1 to 4 carbon atoms or the $—CH_2OR^2$ group, in which R^2 represents an alkyl or an alkenyl group, the R^1 group within the polymeric molecule being the same or different,

and having on the average 1 to 7 moles of the oxirane per hydroxyl group of the novolak,

the polyol and the polyisocyanate being present in such a ratio that 0.95 to 1.25 isocyanate groups of the polyisocyanate correspond to one hydroxyl group of the polyol.

4,371,684

THERMOPLASTIC POLYURETHANES FOR PROCESSING IN EXTRUDERS AND/OR ON CALENDERS

Bernd Quiring, Leverkusen; Georg Niederdellmann, Dormagen; Wilhelm Goyert, Cologne, and Hans Wagner, Dormagen, all of Fed. Rep. of Germany, assignors to Bayer Aktiengesellschaft, Leverkusen, Fed. Rep. of Germany

Continuation of Ser. No. 140,074, Apr. 14, 1980, abandoned, which is a continuation of Ser. No. 29,958, Apr. 13, 1979, abandoned. This application May 29, 1981, Ser. No. 271,308

Claims priority, application Fed. Rep. of Germany, Apr. 21, 1978, 2817457

Int. Cl.[3] **C08G** *18/42*

U.S. Cl. 528—65 **7 Claims**

1. In the processing of thermoplastic polyurethanes in extruders and/or melt roll calenders, the improvement wherein the polyurethanes used are synthesized from

(A) one or more relatively high molecular weight substantially linear polyols having molecular weights in the range from 400 to 10,000 selected from the group consisting of hydroxyl-group-containing polyesters of glycols and adipic acid, phthalic and/or terephthalic acid and their hydrogenation products, hydroxyl polycarbonates, polycaprolactones, polyethylene oxide and polypropylene oxide started with glycols, amines and/or water and polytetrahydrofuran,

(B) diphenyl methane diisocyanate and/or hexamethylene diisocyanate and

(C) a mixture of 85 to 99% by weight of 1,4-butane diol and 1 to 15% by weight of at least one co-extender selected from the group consisting of ethylene glycol, diethylene glycol, triethylene glycol, diethylene-1,2-propane diol, 1,3-butane diol, 1,6-hexane diol, 2-ethyl-1,3-hexane diol, 2,2-dimethyl-1,3-propane diol, 1,4-bis-hydroxymethyl cyclohexane, hydroquinone-bis-hydroxyethyl ether, and mixtures thereof, the equivalent ratio of

NCO groups in component (B) to the Zerewitinoff-active hydrogen atoms in components (A) and (C) being from 0.9:1 to 1.2:1 and the molar ratio of component (A) to (C) being from 1:20 to 5:1.

4,371,685

RADIATION-REACTIVE PRECURSOR STAGES OF HIGHLY HEAT-RESISTANT POLYMERS

Hellmut Ahne, Röttenbach; Eberhard Kühn, Hemhofen, and Roland Rubner, Röttenbach, all of Fed. Rep. of Germany, assignors to Siemens Aktiengesellschaft, Munich, Fed. Rep. of Germany

Filed Jun. 4, 1981, Ser. No. 270,637

Claims priority, application Fed. Rep. of Germany, Jun. 10, 1980, 3021748

Int. Cl.[3] **G03C** *1/68*

U.S. Cl. 528—73 **17 Claims**

1. A radiation-reactive oligomeric and/or polymeric compound which is a precursor of a heterocyclic-based polymer and which is capable of being converted by radiation to said heterocyclic-based polymer, said oligomeric and/or polymeric compound consisting of the addition product of (a) a cyclic carboxylic acid anhydride and (b) a hydroxyl group-containing compound, said hydroxyl group-containing compound itself being an oligomeric and/or polymeric radiation-reactive precursor and consisting of an addition product of (a) an olefinically unsaturated monoepoxide and (b) a member selected from the group consisting of:

(1) a carboxyl group-containing polyaddition product of (i) an aromatic and/or heterocyclic tetracarboxylic acid dianhydride and (ii) a diamino compound or a diamino compound with at least one ortho-position amido group;

(2) a carboxyl group-containing polyaddition product of (i) a member selected from an aromatic and/or heterocyclic dihydroxydicarboxylic acid or an aromatic and/or heterocyclic diaminodicarboxylic acid and (ii) a diisocyanate;

(3) an amino group-containing polycondensation product of (i) an aromatic and/or heterocyclic tetraamino compound and (ii) a dicarboxylic acid chloride ester;

(4) an amino group-containing polyaddition product of (i) an aromatic and/or heterocyclic tetraamino compound and (ii) a tetracarboxylic acid dianhydride; and

(5) a hydroxyl group-containing polycondensation product of (i) an aromatic and/or heterocyclic dihydroxydiamino compound and (ii) a dicarboxylic acid chloride or ester.

4,371,686

ANTITHROMBOGENIC, HIGHLY ELASTIC POLYURETHANE COMPOUND

Noboru Yamamoto, Ikeda, and Iwao Yamashita, Kawanishi, both of Japan, assignors to Agency of Industrial Science & Technology Ministry of International Trade & Industry, Tokyo, Japan

Filed Sep. 14, 1981, Ser. No. 302,119

Claims priority, application Japan, Sep. 12, 1980, 55-127837

Int. Cl.[3] **C08G** *18/32, 18/48*

U.S. Cl. 528—76 **9 Claims**

1. An antithrombogenic, highly elastic, uncrosslinked polyurethane compound produced by the reaction of a polyether diol of the general formula:

$$HO\text{+}CH_2-CH_2O)_a\text{+}CH(CH_3)-CH_2O)_b\text{+}CH_2-CH_2O)_c H$$

wherein, a, b, and c each denote a positive integer, having a polyoxyethylene content in the range of from 10 to 50 weight percent and an average molecular weight in the range of from 500 to 5,000, with 1.5 to 4 mols of a diisocyanate per mol of said polyether diol to give a prepolymer followed by reacting said prepolymer with 0.5 to 3 mols of a diamine per mol of said polyether diol to give said uncrosslinked polyurethane.

8. A method for the manufacture of an antithrombogenic film to be deposited as a coating on the surface of a device, which comprises dissolving in a solvent an antithrombogenic, highly elastic, uncrosslinked polyurethane compound produced by the reaction of a polyether diol of the general formula:

$$HO\text{+}CH_2-CH_2O)_a\text{+}CH(CH_3)-CH_2O)_b\text{+}CH_2-CH_2O)_c H$$

wherein, a, b, and c each denote a positive integer, having a polyoxyethylene content in the range of from 10 to 50 weight percent and an average molecular weight in the range of from 500 to 5,000, with 1.5 to 4 mols of a diisocyanate per mol of said polyether diol to give a prepolymer followed by reacting said prepolymer with 0.5 to 3 mols of a diamine per mol of said polyether diol to give uncrosslinked polyurethane, and applying the resultant solution to the surface of a device.

4,371,687

SULFUR-MODIFIED POLYTETRAMETHYLENE ETHER GLYCOLS, A METHOD FOR PREPARING THEM, AND POLYURETHANES PREPARED THEREFROM

Ivan M. Robinson, Wilmington, Del., assignor to E. I. Du Pont de Nemours and Company, Wilmington, Del.

Filed Jul. 7, 1981, Ser. No. 281,198

Int. Cl.[3] **C08G** *18/52;* **C09K** *3/00*

U.S. Cl. 528—79 **8 Claims**

1. Polytetramethylene ether glycol modified so that it contains in its chain 1-25%, by weight, of moieties represented by the structure

$$-O-\underset{}{CH(R)}-CH_2-S-CH_2-CH(R)-$$

where R is hydrogen, an alkyl radical of 1-3 carbon atoms or phenyl, and the oxygen atom is linked to a hydrogen atom or a carbon atom;

the modified polytetramethylene ether glycol having an oxygen/sulfur atom ratio of 3/1 or greater.

7. A polyurethane which is the reaction product of

(a) the polytetramethylene ether glycol of claims 1, 2 or 3;

(b) an organic polyisocyanate; and

(c) a chain extender.

4,371,688

SUBSTITUTED CYCLOHEXANE-1,2-DICARBOXYLIC ANHYDRIDES AND EPOXY RESINS CONTAINING SAME

Patrick D. Moore, Spartanburg, S.C., assignor to Milliken Research Corporation, Spartanburg, S.C.

Continuation-in-part of Ser. No. 180,300, Aug. 22, 1980, abandoned. This application Nov. 19, 1981, Ser. No. 323,142

Int. Cl.[3] **C08G** *59/42*

U.S. Cl. 528—112 **16 Claims**

1. A substituted CHDA having the structural formula:

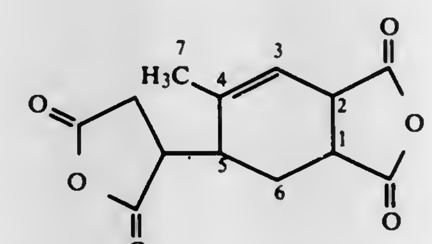

2. A substituted CHDA composition which comprises a predominant amount of a compound of the formula:

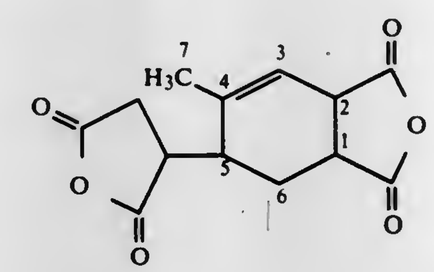

and a minor amount of a compound of the formula:

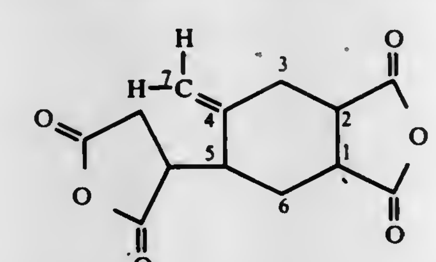

4. A curable epoxy resin composition comprising an epoxy resin and an epoxy resin curing agent, wherein the epoxy resin curing agent is represented by the formula:

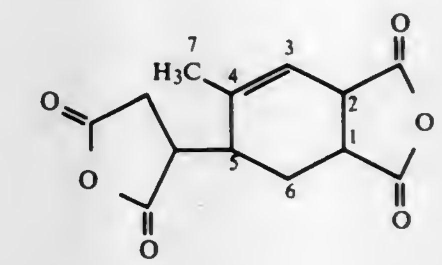

4,371,689

CURABLE RESIN COMPOSITION COMPRISING CYANATE ESTER AND ACRYLIC ALKENYL ESTER

Morio Gaku, Showamachi, and Nobuyuki Ikeguchi, Tokyo, both of Japan, assignors to Mitsubishi Gas Chemical Company, Inc., Tokyo, Japan

Filed Aug. 5, 1980, Ser. No. 175,508

Claims priority, application Japan, Aug. 8, 1979, 54/100927

Int. Cl.[3] **C08G** *83/00, 73/10*

U.S. Cl. 528—162 **10 Claims**

1. A curable resin composition comprising:

(a) at least one cyanate ester compound selected from the group consisting of:

(1) a polyfunctional aromatic cyanate ester monomer having the formula:

$$R-O-C\equiv N)_m$$

wherein m is 2 to 5 and R is an aromatic organic group, the cyanate groups being bonded to an aromatic ring of said aromatic organic group,

(2) a homoprepolymer of one or more cyanate ester monomers of (1), and

(3) a coprepolymer of (1) and an amine; and

(b) at least one compound selected from the group consisting of:

(1) an alkenyl acrylic ester,

(2) an alkenyl methacrylic ester,

(3) a homoprepolymer of one or more alkenyl acrylic esters of (1),

(4) a homoprepolymer of one or more alkenyl methacrylic esters of (2),

(5) a coprepolymer of (1) and (2); said composition including a mixture of components (a) and (b), a preliminary reaction product of components (a) and (b), or the combination of said mixture and said preliminary reaction product.

4,371,690

HEAT-RESISTANT RIGID POLYMERS FROM DIFUNCTIONAL 9,10-DIHYDRO-9,10-ETHANOANTHRACENES

Burton C. Anderson, and August H. Frazer, both of Wilmington, Del., assignors to E. I. Du Pont de Nemours and Company, Wilmington, Del.

Division of Ser. No. 57,113, Jul. 12, 1979, Pat. No. 4,281,106. This application Feb. 9, 1981, Ser. No. 232,566

Int. Cl.[3] **C08G** *69/26, 63/12, 18/00*

U.S. Cl. 528—190 **16 Claims**

1. A tractable polymer containing repeating units of the structure

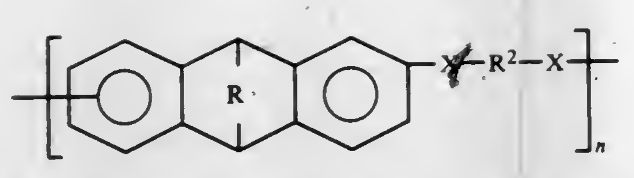

wherein —R— is $—CR'_2CHR'—$ and —R' is —H or $—CH_3$; and $—R^2—$ is, independently, an alkylene group containing 2 to 14 carbon atoms, an arylene group containing 6 to 14 carbon atoms, an alkyl-substituted or chloro-substituted arylene group containing 6 to 14 carbon atoms, a cycloalkylene group containing 4 to 14 carbon atoms, or

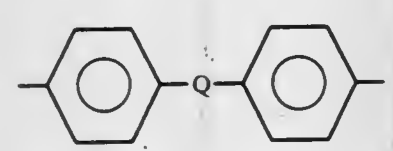

where

$$-Q- \text{ is } -O-,\ -OCH_2CH_2O-,\ -\overset{O}{\overset{\|}{C}}-,\ -(CH_2)_m-$$

where m is 1 to 10,

$$-\underset{CH_3}{\overset{CH_3}{C}}-,\ -(CF_2)_o-$$

where o is 1 to 8,

$$-\underset{CF_3}{\overset{CF_3}{C}}-,\ -NR^3-$$

where R^3 is an alkyl group containing 1 to 6 carbon atoms or an aryl group containing 6 to 12 carbon atoms,

$$-S-,\ -\underset{O}{\overset{O}{S}}- \text{ or } -\overset{O}{\overset{\|}{C}}-R^2-\overset{O}{\overset{\|}{C}}-;\ -X- \text{ is } -O\overset{O}{\overset{\|}{C}}-,\ -\overset{O}{\overset{\|}{C}}O-,$$

$$-O\overset{O}{\overset{\|}{C}}NH-,\ -NH\overset{O}{\overset{\|}{C}}O-,\ -O\overset{O}{\overset{\|}{C}}O-,\ -\overset{O}{\overset{\|}{C}}NH-,\ -NH\overset{O}{\overset{\|}{C}}-,$$

$$-NH\overset{O}{\overset{\|}{C}}NH-,\ -\overset{O}{\overset{\|}{C}}NHNH\overset{O}{\overset{\|}{C}}-,$$

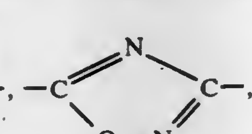

, or

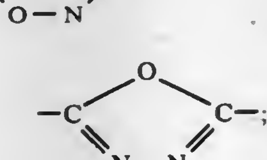

and n is at least 10.

4,371,691
PREPARATION OF POLYCARBONATE FROM SPECIFIC CRUDE BISPHENOLS

Gerhard Friedhofen; Volker Serini; Rainer Neumann; Dieter Freitag, and Hans-Helmut Schwarz, all of Krefeld, Fed. Rep. of Germany, assignors to Bayer Aktiengesellschaft, Leverkusen, Fed. Rep. of Germany
Filed Jul. 9, 1980, Ser. No. 167,269
Claims priority, application Fed. Rep. of Germany, Jul. 13, 1979, 2928464
Int. Cl.³ C08G *63/62*
U.S. Cl. 528—196 **6 Claims**

1. In the process for the preparation of a thermoplastic, aromatic, high-molecular weight polycarbonate from at least one crude bisphenol, the improvement comprising:
   (i) separating said at least one crude bisphenol, immediately after its preparation, from excess of at least one phenol and low boiling substance, in an evaporator at a temperature between 100° and 300° C., and under a pressure of between 0.05 and 1000 millibars, and
   (ii) subjecting said crude bisphenol to desorption using an inert gas to attain a presence therein of monophenols of less than 2.5 percent by weight.

4,371,692
ELASTOMERIC POLYETHERESTERIMIDES

James R. Wolfe, Jr., Wilmington, DE, assignor to E. I. Du Pont de Nemours and Company, Wilmington, Del.
Filed Oct. 2, 1981, Ser. No. 308,130
Int. Cl.³ C08G *69/44, 73/16*
U.S. Cl. 528—289 **7 Claims**

1. A thermoplastic elastomeric polyetheresterimide comprising a multiplicity of long chain esterimide units being represented by the formula

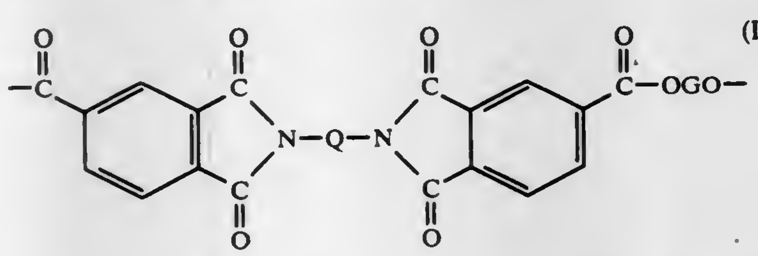

(I)

and short chain esterimide units being represented by the formula

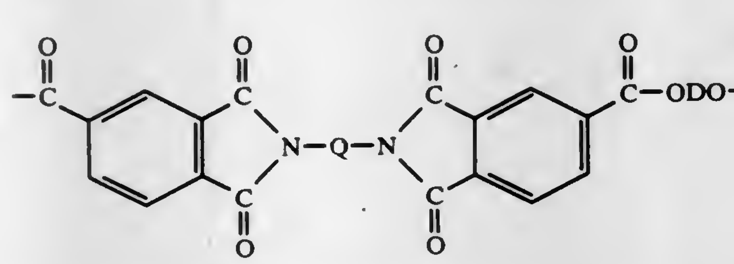

(II)

where G is a divalent radical remaining after the removal of terminal hydroxyl groups from a poly(alkylene oxide)glycol having a number average molecular weight of about 400–4000; D is a divalent radical remaining after removal of hydroxyl groups from a diol having a molecular weight less than about 300 and Q is a divalent radical remaining after removal of amino groups from an aliphatic primary diamine having a molecular weight of less than 350; with the provisos that from about 0.5 to 5 of said short chain esterimide units are present for each of said long chain esterimide units and that said polyetheresterimide has a softening point of at least 160° C.

7. Process for the preparation of the polyetheresterimide of claims 1 or 2 by melt condensation of a mixture of trimellitic anhydride, a primary aliphatic diamine, a poly(alkylene oxide) glycol and a molar excess of a low molecular weight diol, said trimellitic anhydride and said diamine being present in a molar ratio of 2.0:0.85 to 2.0:1.15.

4,371,693
THERMOPLASTIC ELASTOMERIC POLYETHERESTERIMIDES

James R. Wolfe, Jr., Wilmington, Del., assignor to E. I. Du Pont de Nemours and Company, Wilmington, Del.
Filed Oct. 2, 1981, Ser. No. 308,131
Int. Cl.³ C08G *69/08, 69/44*
U.S. Cl. 528—292 **6 Claims**

1. A thermoplastic elastomeric polyetheresterimide comprising a multiplicity of long chain esterimide units being represented by the formula

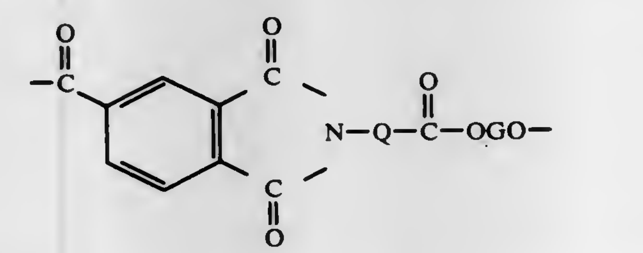

(I)

and short chain esterimide units being represented by the formula

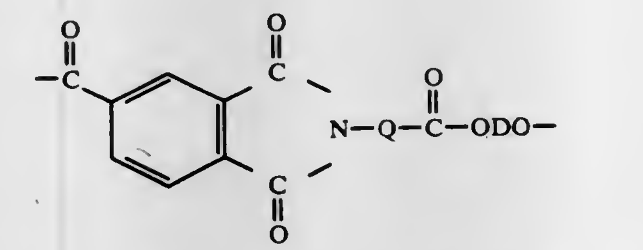

(II)

where G is a divalent radical remaining after the removal of terminal hydroxyl groups from a poly(alkylene oxide)glycol having a number average molecular weight of about 400–4000; D is a divalent radical remaining after removal of hydroxyl groups from a diol having a molecular weight less than about 300 and Q is a divalent radical remaining after removal of an amino group and a carboxyl group from an aliphatic primary amino acid having a molecular weight of less than 250; with the proviso that from about 2 to 10 of said short chain esterimide units are present for each of said long chain esterimide units.

5. A polyetheresterimide of claim 1 wherein the divalent radical Q is derived from glycine, the divalent radical D is derived from ethylene glycol and the divalent radical G is derived from poly(tetramethylene oxide) glycol having a number molecular weight of 600–2200.

4,371,694
AROMATIC COMPOUNDS AND THEIR MANUFACTURE

Michael S. Alexiou, Uxbridge; Philip I. Brittain, Bray, and John H. P. Tyman, Uxbridge, all of England, assignors to Brent Chemicals International Limited, Iver, England
PCT No. PCT/GB79/00183, § 371 Date Jul. 1, 1980, § 102(e) Date Jul. 1, 1980, PCT Pub. No. WO80/00963, PCT Pub. Date May 15, 1980
PCT Filed Nov. 7, 1979, Ser. No. 197,772
Claims priority, application United Kingdom, Nov. 7, 1978, 43411/78
Int. Cl.³ C07D *221/14, 311/06;* **C07C** *101/66*
U.S. Cl. 546—100 **11 Claims**

1. A process for producing a compound of Formula I

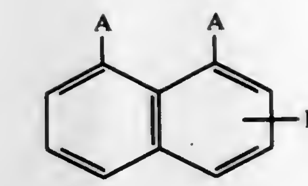

I

from a compound of formula Ia

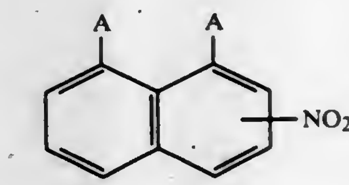

Ia

wherein, in each of Formula I and Formula Ia, each substituent A contains a carbonyl group substituted direct into the ring and the two substituents A may be linked to form a cyclic group with the carbon atoms to which they are attached and the groups B and NO_2 are each in the same position and are in a position selected from the 2 and 4 positions and, in Formula I, B is selected from secondary and tertiary amino groups, the process comprising reacting the compound of Formula Ia in a substantially anhydrous reaction medium containing a solvent with at least a stoichiometric amount of a reagent selected from organic primary and secondary amines.

4,371,695
STABILIZERS FOR POLYMERS AND POLYMERS STABILIZED THEREBY

Piero Di Battista, and Francesco Gratani, both of Milan, Italy, assignors to Montedison S.p.A., Milan, Italy
Division of Ser. No. 116,850, Jan. 30, 1980, Pat. No. 4,317,767. This application Jun. 3, 1981, Ser. No. 269,847
Claims priority, application Italy, Feb. 1, 1979, 19761 A/79
Int. Cl.³ C07D *401/12*
U.S. Cl. 546—190 **2 Claims**

1. N-alkyl-piperidine derivatives of hydroxy-benzyl-malonic acid having the formula:

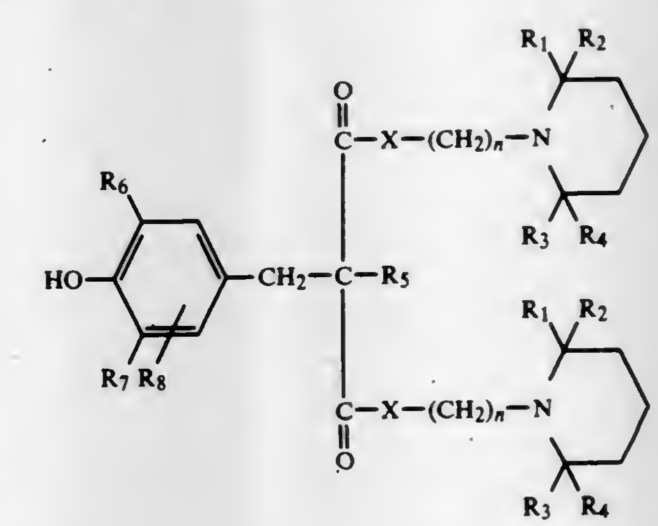

(I)

wherein each of

R_1, R_2, R_3 and R_4, which may be the same or different, is an alkyl radical having 1 to 6 carbon atoms or R_1 and R_2 together and R_3 and R_4 together form a cycloalkyl radical having 5 to 8 carbon atoms; R_5 is hydrogen, an alkyl radical having 1 to 18 carbon atoms or a 4-hydroxy-benzyl group of the formula:

(II)

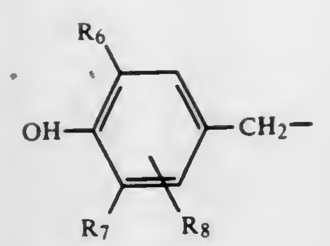

each of R_6 and R_7, which may be the same or different, is hydrogen, an alkyl radical having 1 to 6 carbon atoms, an aralkyl radical having 7 to 9 carbon atoms or a cyclo-alkyl radical having 5 to 8 carbon atoms; R_8 is hydrogen or an alkyl radical having 1 to 6 carbon atoms; n is an integer comprised between 1 and 12, and X is oxygen or

$$\begin{array}{c} R_9 \\ | \\ -N- \end{array} \text{ group,}$$

wherein R_9 is hydrogen, an alkyl radical having 1 to 18 carbon atoms, an alkenyl radical having 3 to 4 carbon atoms, a cyclo-alkyl radical having 4 to 12 carbon atoms, an aryl radical having 6 to 12 carbon atoms or an aralkyl radical having 7 to 9 carbon atoms.

2. N-alkyl-piperidine derivatives of hydroxy-benzyl-malonic acid according to claim 1, in which, in formula (I), each of R_1 R_2, R_3 and R_4 is methyl; R_5 is butyl or hydroxy-benzyl of general formula:

(II)

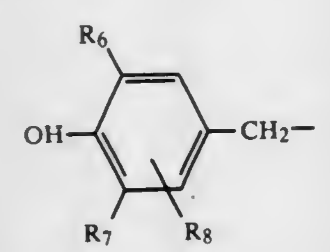

R_6 and R_7 are each tert.butyl, R_8 is hydrogen, X is oxygen and n is an integer from 2 to 6.

4,371,696

CERTAIN PYRIDINE METHYLTHIO ACETALDEHYDE DERIVATIVES AND NON-CYCLIC AND CYCLIC ACETALS THEREOF

Joseph G. Lombardino, Niantic, and Charles A. Harbert, Waterford, both of Conn., assignors to Pfizer Inc., New York, N.Y.

Continuation-in-part of Ser. No. 168,127, Jul. 14, 1980, abandoned, which is a division of Ser. No. 85,011, Oct. 15, 1979, Pat. No. 4,246,263. This application Jun. 26, 1981, Ser. No. 276,242

Int. Cl.³ C07D *407/12, 213/48, 213/51*

U.S. Cl. 546—283 **6 Claims**

1. A compound of the formula

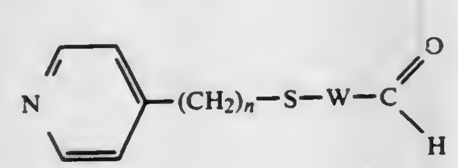

or

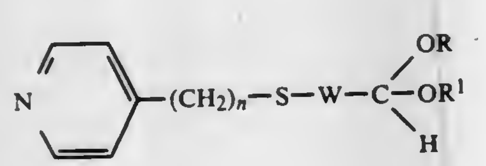

wherein

n is 1 or 2;

W is methylene, unsubstituted or substituted with either methyl or phenyl;

R and R^1 when taken separately are the same and are each (C_1-C_4)alkyl; and

R and R^1 when taken together are ethano or propano;

or a pharmaceutically-acceptable acid addition salt thereof.

4,371,697

3-[1-(HYDROXYMETHYL)-2-PHENYLETHYL]-N-[(PHENYLAMINO)-CARBONYL]SYDNONE IMINE

Reinhardt P. Stein, Audubon, Pa., assignor to American Home Products Corporation, New York, N.Y.

Filed Oct. 6, 1980, Ser. No. 194,702

Int. Cl.³ C07D *271/04;* **A61K** *31/42*

U.S. Cl. 548—125 **7 Claims**

1. A compound of the formula:

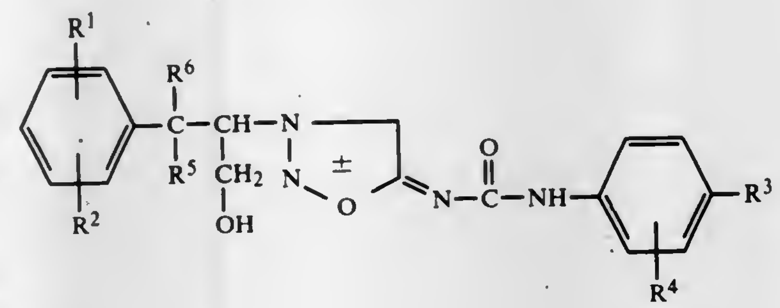

in which

R^1 and R^2 are, independently, hydrogen, alkyl of 1 to 6 carbon atoms, alkoxy of 1 to 6 carbon atoms, halo, perfluoroalkyl of 1 to 3 carbon atoms, nitro, alkanoyl of 2 to 4 carton atoms or alkoxycarbonyl of 2 to 4 carbon atoms;

R^3 is hydrogen, halo, nitro or alkanoyl of 2 to 4 carbon atoms;

R^4 is hydrogen, halo, nitro or perfluoroalkyl of 1 to 3 carbon atoms;

R^5 and R^6 are, independently, hydrogen, methyl or ethyl;

or a non-toxic acid addition salt thereof.

4,371,698

PROCESS FOR THE PURIFICATION OF MERCAPTOBENZOTHIAZOLE

Michel J. C. Alicot, La Barthe De Neste, and Adrien P. N. Tignol, Montrejeau, both of France, assignors to P C U K Produits Chimiques Ugine Kuhlmann, Courbevoie, France

Filed Feb. 14, 1980, Ser. No. 121,570

Claims priority, application France, Mar. 6, 1979, 79 05710

Int. Cl.³ C07D *277/72*

U.S. Cl. 548—177 **7 Claims**

1. Process for the purification of mercaptobenzothiazole which comprises the steps of adding aniline to the crude product resulting from the reaction of aniline, sulfur and carbon disulfide in the reactor where the synthesis took place, at a temperature between 170° and 300° C., the amount of aniline being sufficient to solubilize the impurities in said crude product, cooling the resultant mixture to ambient temperature, filtering and washing with aniline the precipitated mercaptobenzothiazole which is thus obtained as a purified product.

6. Process for the purification of mercaptobenzothiazole which comprises the steps of releasing the crude product to atmospheric pressure in the reactor where the synthesis took place, removing the gaseous by-product from said crude product resulting from the reaction of aniline, sulfur and carbon dioxide, mixing the degassified product, at a temperature between 15° C. and 184° C., with aniline in sufficient amount to solubilize the impurities in said crude product, cooling the resultant mixture to ambient temperature, filtering and washing with aniline the precipitated mercaptobenzothiazole which is thus obtained as a purified product.

4,371,699

PROCESS FOR PREPARATION OF OPTICALLY ACTIVE N-MERCAPTOALKANOYLAMINO ACIDS

Takehisa Ohashi, Kobe; Masami Shimazaki, Takasago; Kazunori Kan, Kobe; Hideo Kondo, Takasago, and Kiyoshi Watanabe, Akashi, all of Japan, assignors to Kanegafuchi Chemical Industry Co., Ltd., Osaka, Japan

Filed Dec. 9, 1980, Ser. No. 214,780

Claims priority, application Japan, Dec. 13, 1979, 54-162377; Dec. 13, 1979, 54-162378; Dec. 28, 1979, 54-171904; Mar. 8, 1980, 55-29430

Int. Cl.³ C07D *207/16, 211/60, 277/06*

U.S. Cl. 548—201 **17 Claims**

1. A process for the preparation of an optically active N-mercaptoalkanoylamino acid represented by formula (I):

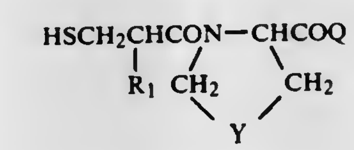

(I)

wherein R_1 is lower alkyl having from 1 to 4 carbon atoms, Y is $(CH_2)_n$, n being 1 or 2, or sulfur, and Q is hydroxy or the residual part of an amino acid represented by formula (II):

$$\begin{array}{c} -HNCHCO_2H \\ | \\ R_2 \end{array} \qquad (II)$$

wherein R_2 is lower alkyl having from 1 to 4 carbon atoms or benzyl, which comprises

(1) reacting an optically active β-hydroxyalkanoic acid represented by formula (III):

$$\begin{array}{c} HOCH_2CHCO_2H \\ | \\ R_1 \end{array} \qquad (III)$$

wherein R_1 is the same as defined above, with thionyl chloride or thionyl bromide in the presence of a catalyst by keeping the temperature of the reaction mixture at not more than 25° C. when said thionyl chloride or thionyl bromide is mixed with the compound (III) and then raising the temperature of the reaction mixture up to from about 30° C. to about 100° C. to prepare an optically active β-haloalkanoyl halide represented by formula (IV):

$$\begin{array}{c} XCH_2CHCOX \\ | \\ R_1 \end{array} \qquad (IV)$$

wherein X is chlorine or bromine and R_1 is the same as defined above;

(2) reacting the β-haloalkanoyl halide with an amino acid represented by formula (V):

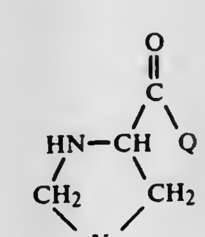

(V)

wherein Y and Q are the same as defined above, to produce an optically active N-β-haloalkanoylamino acid represented by formula (VI):

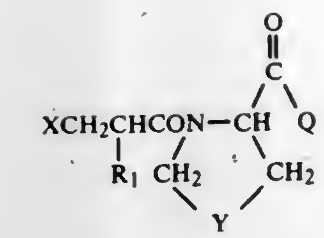

(VI)

wherein X, R_1, Y and Q are the same as defined above; and

(3) reacting the N-β-haloalkanoylamino acid with an alkali metal salt of hydrogen sulfide or ammonium hydrosulfide, of which the molar ratio to the compound (VI) is from about 2 to about 10, in water or a polar aprotic solvent at a temperature of from about 60° C. to about 90° C., the configuration of the formulas (II), (III), (IV), (V), and (VI) being retained in all the optically active compounds throughout the process to prepare the compound represented by formula (I).

4,371,700

PREPARATION OF 1-AZOLYL-3,3-DIMETHYL-1-PHENOXY-BUTAN-2-OLS

Eckart Kranz, Wuppertal, Fed. Rep. of Germany, assignor to Bayer Aktiengesellschaft, Leverkusen, Fed. Rep. of Germany

Filed Feb. 9, 1981, Ser. No. 232,461

Claims priority, application Fed. Rep. of Germany, Feb. 26, 1980, 3007079

Int. Cl.³ C07D *249/08, 233/60*

U.S. Cl. 548—262 **5 Claims**

1. A process for the preparation of a 1-azolyl-3,3-dimethyl-1-phenoxy-butan-2-ol of the formula

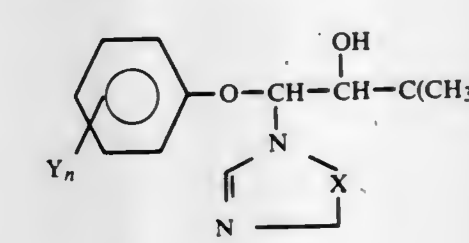

in which

X is a nitrogen atom or a CH group,

Y each independently is halogen, phenyl, phenoxy, nitro, alkyl, alkoxy or cycloalkyl, and

n is 0, 1, 2 or 3,

comprising reacting a 1-azolyl-3,3-dimethyl-1-phenoxybutan-2-one of the formula

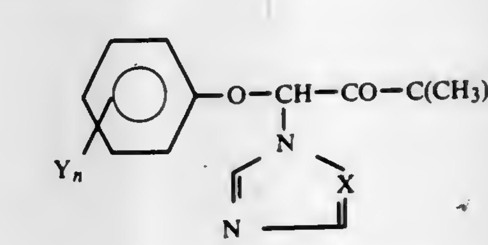

with formic acid/triethylamine in the form of a 5:2 addition compound of the formula

$5HCOOHx2N(C_2H_5)_3$,

about 1 to 4 mols of the addition compound being employed per mol of 1-azolyl-3,3-dimethyl-1-phenoxy-butan-2-one.

4,371,701
ADDUCTS OF 1-CYCLOHEXENE-1,2-DICARBOXYLIC ANHYDRIDE WITH OLEFINS
Ellis K. Fields, River Forest, and Tayseer S. Nimry, Wheaton, both of Ill., assignors to Standard Oil Company (Indiana), Chicago, Ill.
Filed Dec. 14, 1981, Ser. No. 330,154
Int. Cl.[3] C07D *307/89*
U.S. Cl. 549—235 **7 Claims**

1. A bicyclo [4.2.0] octane-1,6-dicarboxylic acid compound which comprises the adduct of 1-cyclohexene-1,2-decarboxylic acid anhydride and an olefinically unsaturated compound selected from the group consisting of an aliphatic olefin, a cycloaliphatic olefin and allyl ethers.

4,371,702
VAPOR PHASE OXIDATION OF N-BUTANE TO MALEIC ANHYDRIDE
Tom A. Bither, Jr., Wilmington, Del., assignor to E. I. Du Pont de Nemours and Company, Wilmington, Del.
Filed Feb. 16, 1982, Ser. No. 349,305
Int. Cl.[3] C07D *307/60*
U.S. Cl. 549—260 **11 Claims**

1. Improved catalytic process for the oxidation of n-butane to maleic anhydride using a vanadium/phosphorus oxide catalyst, the improvement consisting of using a vanadium/phosphorus oxide catalyst containing the promoter comprising silicon and at least one of indium, antimony and tantalum, the Si/V atom ratio being in the range 0.02–3.0:1.0, the (In+Sb+Ta)/V atom ratio being in the range 0.005–0.2:1.0, and the P/V atom ratio being in the range 0.9–1.3:1.0, said catalyst being prepared in an aqueous or organic liquid medium by the procedure wherein the appropriate vanadium species substantially of valence +4 is first contacted with the promoter or promoter precursors and thereafter with the appropriate phosphorus species.

4,371,703
PROCESS FOR THE PRODUCTION OF ISOSORBIDE-5-NITRATE
Peter Stoss, Illertissen, Fed. Rep. of Germany, assignor to Heinrich Mack Nachf. Chem-Parm. Fabrik, Illertissen, Fed. Rep. of Germany
Filed Jan. 7, 1982, Ser. No. 337,903
Claims priority, application Fed. Rep. of Germany, Jan. 29, 1981, 3102947
Int. Cl.[3] C07D *493/04*
U.S. Cl. 549—464 **4 Claims**

1. A process for the preparation of isosorbide-5-nitrate comprising
(a) heating an acylation mixture of isosorbide, said mixture containing varying proportions of isosorbide, isosorbide-2-acylate, isosorbide-5-acylate and/or isosorbide-2,5-diacylate, or pure isosorbide-5-acylate or an equimolar mixture of isosorbide-2,5-diacylate and isosorbide, in the presence of a transacylation catalyst and separating isosorbide-2-acylate from said mixture by fractional distillation;
(b) esterifying said isosorbide-2-acylate with nitric acid to form isosorbide-2-acylate-5-nitrate; and
(c) Partially hydrolysing said isosorbide-2-acylate-5-nitrate to form isosorbide-5-nitrate.

4,371,704
SUBSTITUTED ALKYLENE OXIDES FROM SUBSTITUTED ALKYLENE CARBONATES
Edward E. McEntire, and Robert M. Gipson, both of Austin, Tex., assignors to Texaco Development Corporation, White Plains, N.Y.
Continuation-in-part of Ser. No. 920,908, Jun. 29, 1978, abandoned. This application Nov. 13, 1979, Ser. No. 93,319
Int. Cl.[3] C07D *317/36*
U.S. Cl. 549—518 **6 Claims**

1. A process for the preparation of a substituted ethylene epoxide of the formula

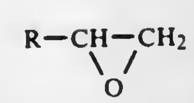

wherein R is alkyl, aryl, substituted alkyl or substituted aryl which comprises heating the corresponding substituted ethylene carbonate having the formula

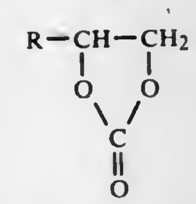

wherein R is defined as above in the presence of a catalytic amount of a catalyst which is selected from the group of alkali metal fluorides consisting of lithium fluoride, sodium fluoride, and potassium fluoride.

4,371,705
SYNTHESIS OF ALPHA-AMINO ACIDS
Jefferson W. Davis, Jr., San Francisco, Calif., assignor to The United States of America as represented by the United States Department of Energy, Washington, D.C.
Division of Ser. No. 77,811, Sep. 21, 1979, abandoned. This application Jun. 29, 1981, Ser. No. 278,104
Int. Cl.[3] C07C *99/10*
U.S. Cl. 562—444 **6 Claims**

1. An improved process for synthesizing an alpha-amino acid comprising:
reacting a metal cyanide with an aldehyde or a ketone in the absence of water to form a corresponding cyanohydrin of the formula:

$R_1R_2C(OH)CN$

wherein R_1 and R_2 represent hydrogen, alkyl radicals of 1 to 10 carbon atoms, alkenyl radicals of 2 to 4 carbon atoms, aryl radicals of 6 to 12 carbon atoms, alkaryl radicals of 7 to 8 carbon atoms, aralkyl radicals of 7 to 8 carbon atoms, and p-hydroxyphenyl radicals,
reacting said cyanohydrin with thionyl chloride to form a chloronitrile of the formula:

$R_1R_2C(Cl)CN,$

reacting said chloronitrile with ammonia to form an amino nitrile of the formula:

$R_1R_2C(NH_2)CH$; and,

hydrolyzing said amino nitrile to the alpha-amino acid.

4,371,706
PREPARATION OF ALKALI METAL AMINOALKANOATES
James T. Edmonds, Jr., and Lacey E. Scoggins, both of Bartlesville, Okla., assignors to Phillips Petroleum Company, Bartlesville, Okla.
Division of Ser. No. 147,407, May 6, 1980, Pat. No. 4,324,886. This application Oct. 22, 1981, Ser. No. 315,072
Int. Cl.[3] C07C *99/06*
U.S. Cl. 562—553 **4 Claims**

1. A method for preparing alkali metal aminoalkanoate represented by the formula $RNH(CR_2)_nCO_2M$ where each R is selected from among hydrogen, and hydrocarbyl radicals selected from alkyl, cycloalkyl, aryl, and combinations in which the number of carbon atoms in each of the radicals ranges from 1 to about 12, M is an alkali metal selected from sodium, potassium, rubidium, and cesium, n is an integer of 1 to about 12, and the total number of carbon atoms in each molecule of the alkali metal aminoalkanoate is 3 to about 24, by contacting in the presence of an alkali metal carboxylate represented by the formula $R_3CO_2M_1$ where R_3 is a hydrocarbyl radical selected from among alkyl, cycloalkyl, aryl, and combinations thereof, said radicals having from 1 to about 20 carbon atoms, and M_1 is an alkali metal selected from lithium, sodium, potassium, rubidium, and cesium, a reaction mixture comprising:
(a) at least one alkali metal hydroxide;
(b) water, and
(c) at least one lactam.

4,371,707
PROCESS FOR THE CONVERSION OF BORON TRIFLUORIDE DIMETHYL ETHER COMPLEX TO THE BORON TRIFLUORIDE DIALKYL ETHER COMPLEX
Richard E. Eibeck, Orchard Park; Martin A. Robinson, East Amherst; Francis E. Evans, and Eugene B. Recla, both of Hamburg, all of N.Y., assignors to Allied Corporation, Morris Township, Morris County, N.J.
Filed Dec. 15, 1980, Ser. No. 216,045
Int. Cl.[3] C07F *5/02*
U.S. Cl. 568—6 **11 Claims**

1. A process for the conversion of boron trifluoride-dimethyl ether complex into boron trifluoride-dialkyl ether complex substantially free of dimethyl ether impurities, which comprises:
(a) contacting the boron trifluoride diemthyl ether complex essentially free of boron trifluoride, in the liquid phase, with an effective amount of dialkyl ether wherein at least one alkyl group contains at least two carbon atoms in a reaction zone to form a liquid reaction mixture comprising boron trifluoride dialkyl ether complex and residual dimethyl ether and excess diethyl ether;
(b) restricting vapor equilibrium region above the liquid reaction mixture in the reaction zone, while heating the liquid reaction mixture for a time and at a temperature sufficient to remove the residual dimethyl ether and to form boron trifluoride dialkyl ether complex substantially free of dimethyl ether impurities; and
(c) recovering boron trifluoride dialkyl ether complex substantially free of dimethyl ether impurities.

4,371,708
4-SUBSTITUTED 3,3-DIMETHYL-BUTAN-2-ONES, PROCESSES FOR THEIR PREPARATION AND THEIR USE AS INTERMEDIATE PRODUCTS
Wolfgang Krämer, and Hans-Ludwig Elbe, both of Wuppertal, Fed. Rep. of Germany, assignors to Bayer Aktiengesellschaft, Leverkusen, Fed. Rep. of Germany
Filed May 20, 1981, Ser. No. 265,269
Claims priority, application Fed. Rep. of Germany, Jun. 7, 1980, 3021516
Int. Cl.[3] C07C *151/00*
U.S. Cl. 568—31 **7 Claims**

1. A 4-substituted 3,3-dimethyl-butan-2-one of the formula

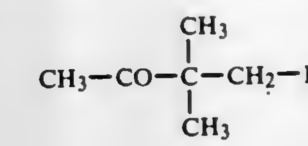

in which
R represents cyano or the grouping —X—R^1,
wherein
R^1 represents n-alkyl with 1 to 4 carbon atoms, isopropyl, isobutyl, sec.-butyl, alkenyl with 3 to 4 carbon atoms, alkynyl with 3 to 4 carbon atoms, optionally substituted aryl or substituted aralkyl, or represents cyano provided that X represents —O— or —S—, and
X represents —O—, —S—, —SO—, or —SO_2—.

4,371,709
METHOD OF PREPARING OLIGOMERIC BROMINOUS XYLYLENE BISPHENOL ETHERS
Klaus-Dieter Steffen, Hennef, and Manfred Thallmeier, Troisdorf-Eschmar, both of Fed. Rep. of Germany, assignors to Dynamit Nobel AG, Troisdorf, Fed. Rep. of Germany
Filed Jul. 11, 1980, Ser. No. 167,555
Claims priority, application Fed. Rep. of Germany, Jul. 24, 1979, 2929914
Int. Cl.[3] C07C *148/00, 41/16*
U.S. Cl. 568—33 **15 Claims**

1. In a method of preparing an oligomeric-bromine-containing xylylene phenol ether, containing structural units of the formula

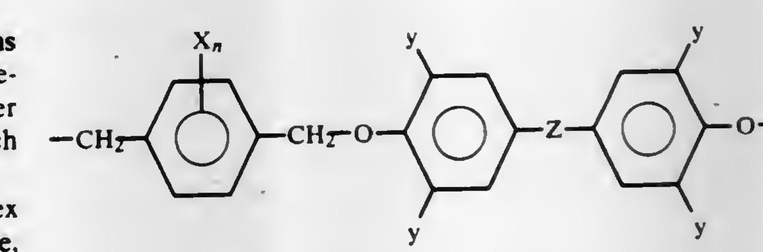

wherein
X-Br, Cl or H, n=1 to 4 and y is Br, Cl or H, independently of one another, at least two bromines being contained in the sum X+Y, and Z representing a direct bond, an alkylene moiety of 1–6 carbon atoms in the chain, or a —SO_2— group by contacting a p-xylylene dichloride and/or dibromide with a phenol, bisphenol or bis (hydroxyphenyl) sulphone in the presence of an alkaline compound in the form of an alkali metal salt at 85° to 160° C., the improvement wherein the process is carried out in the presence of a ketone solvent, said ketone being an aliphatic or cyclic ketone of 3 to 10 carbon atoms.

4,371,710

PERFLUOROALKYL COMPOUNDS AND PROCESS FOR PREPARING THE SAME

Teruo Umemoto, Sagamihara, Japan, assignor to Sagami Chemical Research Center, Tokyo, Japan

Continuation of Ser. No. 156,951, Jun. 6, 1980, Pat. No. 4,324,741. This application Sep. 17, 1981, Ser. No. 303,322

Claims priority, application Japan, Jun. 6, 1979, 54-69979

Int. Cl.³ C07C *143/00;* A61K *31/185*

U.S. Cl. 568—35 **1 Claim**

1. Perfluoroalkyl compounds represented by the formula (I):

$$R_f{-}I^{\oplus}O^{\ominus}SO_2A \quad (\text{with Ar on I}) \qquad (I)$$

wherein R_f represents a perfluoroalkyl group having 1 to 20 carbon atoms, Ar represents a substituted or unsubstituted phenyl group wherein the substituent is an alkyl group having 1 to 4 carbon atoms or a halogen atom, I represents an iodine atom, and A represents a hydroxy group or a halogen atom.

4,371,711

PROCESS FOR PRODUCING 4-HYDROXYCYCLOPENTENONES

Kenji Saito, Toyonaka, and Hiroshi Yamachika, Ibaraki, both of Japan, assignors to Sumitomo Chemical Company, Limited, Osaka, Japan

Filed May 20, 1980, Ser. No. 151,603

Claims priority, application Japan, May 30, 1979, 54-67689; May 30, 1979, 54-67690; May 30, 1979, 54-67691; May 31, 1979, 54-68495

Int. Cl.³ C07C *45/29, 45/45, 45/59, 45/67*

U.S. Cl. 568—310 **3 Claims**

1. A method of producing a 4-hydroxycyclopentenone represented by the formula

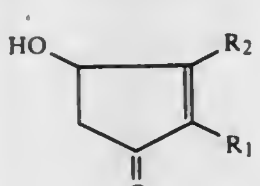

wherein R_1 is an alkyl, alkenyl, alkynyl, cycloalkyl, thienyl, phenyl, p-methylbenzyl or benzyl group and R_2 is an alkyl, alkenyl or alkynyl group having 6 or less carbon atoms, which comprises reacting a cyclopentendione compound of the formula,

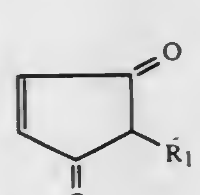

wherein R_1 is as defined above, with a Grignard reagent of the formula,

R_2MgX

wherein R_2 is as defined above and X is chlorine, bromine or iodine, to obtain an oxocyclopentene compound of the formula

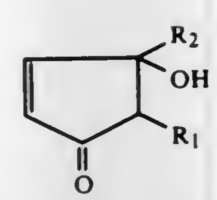

wherein R_1 and R_2 are as defined above; and reacting the oxocyclopentene compound in the presence of a base selected from the group consisting of hydroxides, carbonates, bicarbonates and acetates of sodium and potassium; basic salts of hydroxides, carbonates, bicarbonates and acetates of calcium and barium; triethylamine or pyridine; and basic ion exchange resins; in an amount of from 0.01 to 10 moles per mole of the oxocyclopentene compound at 0° to 200° C., or in the presence of alumina in an amount of from 0.5 to 30 times the weight of the oxocyclopentene compound at 0° to 150° C.

4,371,712

ALKYLSALICYLALDEHYDE PREPARATION

Richard J. Lee, Downers Grove, and Leonard J. Baranowski, Winfield, both of Ill., assignors to Standard Oil Company (Indiana), Chicago, Ill.

Filed Oct. 22, 1981, Ser. No. 313,798

Int. Cl.³ C07C *45/00*

U.S. Cl. 568—430 **13 Claims**

1. A method of preparing an alkylsalicylaldehyde whose alkyl-substituent contains at least 6 carbon atoms which method comprises reacting an alkylphenol whose alkyl-substituent contains at least 6 carbon atoms with a dialkoxymethane in the presence of a peroxide and in the presence of a free radical forming ionic manganese catalyst at a temperature of about the peroxides decomposition.

4,371,713

PROCESS FOR THE PREPARATION OF POLYETHER GLYCOL

Shuichi Matsumoto; Kenji Yasuda; Masayuki Endoh, all of Yokohama, and Kunihiro Harada, Machida, all of Japan, assignors to Japan Synthetic Rubber Co., Ltd., Tokyo, Japan

Filed Oct. 29, 1981, Ser. No. 316,287

Claims priority, application Japan, Nov. 4, 1980, 55-153781; Nov. 6, 1980, 55-155184; May 29, 1981, 56-80997

Int. Cl.³ C07C *41/02*

U.S. Cl. 568—614 **14 Claims**

1. A process for preparing polyether glycol, comprising (A) polymerizing tetrahydrofuran or a mixture of tetrahydrofuran and other copolymerizable cyclic ether(s) in the presence of a ring-opening polymerization catalyst comprising as principal components fuming sulfuric acid and/or fluorosulfuric acid, (B) adding water or an aqueous alkali solution to the polymerization product, hydrolyzing the said product under the strongly acidic condition, and (C) washing the hydrolysis product, characterized in that the polymerization of tetrahydrofuran or a mixture of tetrahydrofuran and other copolymerizable cyclic ether(s) is conducted by (1) contacting the monomer with the ring-opening polymerization catalyst at a temperature within the range of −30° C. to 10° C. at the first stage and (2) elevating the reaction temperature, when the conversion of said monomer into the polymer has reached 5% or more, to a temperature which falls within the range of 0° C. to 40° C. and is at least 10° C. higher than the reaction temperature at the first stage and continuing the polymerization reaction at the elevated temperature.

4,371,714

PREPARATION OF 4-ALKYLANISOLES AND PHENOLS

Lewis B. Young, Skillman, N.J., assignor to Mobil Oil Corporation, New York, N.Y.

Filed Dec. 30, 1980, Ser. No. 221,237

Int. Cl.³ C07C *41/30*

U.S. Cl. 568—628 **15 Claims**

1. A process for the selective production of 4-alkylanisole comprising:

contacting an alkylating agent with anisole, in the presence of a crystalline zeolite having a constraint index of within the approximate range of 1 to 12 and a silica to alumina mole ratio of at least 12, at a temperature of 100° C. to 600° C. and a pressure of between 10^4 Pa and 10^7 Pa, whereby said alkylating agent is reacted with said anisole to yield a product enriched in 4-alkylanisole.

4,371,715

PROCESS FOR PREPARING CYCLOHEXYL PHENETHYLETHER DERIVATIVES

Jacob Kiwala, Brooklyn, N.Y.; Richard J. Tokarzewski, Keyport, N.J.; Frederick L. Schmitt, Holmdel, N.J., and Mark A. Sprecker, Sea Bright, N.J., assignors to International Flavors & Fragrances Inc., New York, N.Y.

Division of Ser. No. 235,844, Feb. 19, 1981, Pat. No. 4,324,923, which is a continuation-in-part of Ser. No. 192,238, Sep. 30, 1980, Pat. No. 4,306,096. This application Sep. 25, 1981, Ser. No. 305,535

Int. Cl.³ C07C *41/06*

U.S. Cl. 568—659 **5 Claims**

1. A process for preparing a cyclohexyl phenethylether derivative defined according to the structure:

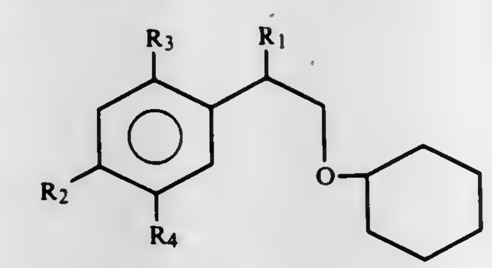

wherein R_1, R_2, R_3 and R_4 are the same or different and each represents methyl or hydrogen comprising the steps of intimately admixing cyclohexene having the structure:

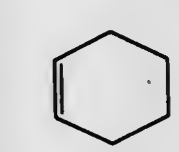

with a phenylethyl alcohol derivative having the structure:

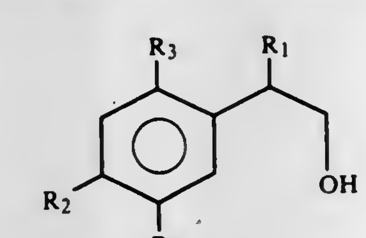

in the presence of an Amberlyst ® 15 sulfonated copolymer of styrene and divinyl benzene catalyst, wherein the temperature of reaction is 110° C.; wherein the pressure of reaction is 1 atmosphere; wherein the mole ratio of phenylethyl alcohol derivative:cyclohexene is 1:1; and wherein the weight ratio of catalyst:phenylethyl alcohol derivative is from about 2:100 up to about 20:100; the reaction being carried out by addition of the cyclohexene to the phenylethyl alcohol derivative during which addition, residual water is removed by azeotropic distillation; neutralizing the resulting reaction mass with base; and fractionally distilling the cyclohexyl phenethylether derivative from the reaction mass.

4,371,716

β-(SEC-ALKOXY) ETHANOL PROCESS

Timm E. Paxson; Leo Kim, both of Houston, Tex., and Andre B. Van Aken, Amsterdam, Netherlands, assignors to Shell Oil Company, Houston, Tex.

Continuation of Ser. No. 71,895, Sep. 4, 1979, abandoned. This application Jul. 17, 1981, Ser. No. 284,267

Int. Cl.³ C07C *41/06*

U.S. Cl. 568—678 **2 Claims**

1. A process for preparing β-(sec-alkoxy) ethanol which comprises (a) reacting an olefin having from about 8 to about 22 carbon atoms with ethylene glycol at a temperature ranging from about 80° to about 180° in the presence of an acid catalyst selected from the group consisting of sulfuric acid and benzenesulfonic acid and sufficient solvent to provide a one phase reaction medium with the solvent consisting essentially of a substance selected from the group consisting of, 2,4-dimethylsulfolane, 3,4-dimethylsulfolane, and mixtures thereof, (b) extracting the reaction product with an alkane having a carbon number ranging from about 5 to about 20 and (c) recovering the β-(sec-alkoxy) ethanol product from the alkane product.

4,371,717

PROCESS FOR THE IN-SOLVENT, IN-SITU GENERATION OF HALOALKYL ALKYL ETHERS

Gerhard H. Alt, University City, and John P. Chupp, Kirkwood, both of Mo., assignors to Monsanto Company, St. Louis, Mo.

Division of Ser. No. 133,720, Mar. 25, 1980, Pat. No. 4,284,564. This application Feb. 3, 1981, Ser. No. 230,996

Int. Cl.³ C07C *41/01*

U.S. Cl. 568—681 **9 Claims**

1. A process for preparing haloalkyl ethers having the formula

$$R_1\underset{\substack{|\\ X}}{C}HOR \qquad (I)$$

where R_1 is alkyl containing 1 to 4 carbon atoms; X is chloro, bromo or iodo; R is alkyl containing 1 to 10 carbon atoms, alkenyl containing 3 to 10 carbon atoms, cycloalkyl containing 3 to 10 carbon atoms, alkynyl containing 3 to 10 carbon atoms, (C_{1-5}) alkoxy (C_{2-5}) alkyl, mono-halo (C_{2-5}) alkyl, mono-halo (C_{3-5}) alkenyl or

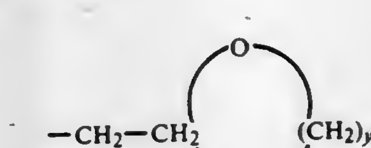

y is the integer 2, 3, or 4, with the proviso that when R is alkenyl or alkynyl the carbon atom attached to the oxygen may not share a double or triple bond with an adjacent carbon atom;

which comprises reacting an alcohol of the formula

$$ROH \qquad (II)$$

(where R is as defined in Formula I);

with an aldehyde of formula

$$R_1{-}\overset{\overset{\large O}{\|}}{C}{-}H \qquad (III)$$

(where R_1 is as defined in Formula I);

in the presence of a solvent and in the presence of a halide liberating ion compound of the formula

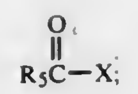

where X is as defined in Formula I and where R_5 is C_{1-5} alkyl, phenyl or benzyl; the temperature of said reaction being from about −20° C. to 100° C.

4,371,718

USING BUTENES TO FRACTIONATE METHANOL FROM METHYL-TERTIARY-BUTYL ETHER

Thomas Hutson, Jr., Bartlesville, Okla., assignor to Phillips Petroleum Company, Bartlesville, Okla.

Filed Jul. 2, 1981, Ser. No. 279,916

Int. Cl.³ B01D *3/36;* **C07C** *41/42*

U.S. Cl. 568—697 **7 Claims**

1. A process for the production of a substantially pure MTBE stream which comprises:

(a) feeding methanol and isobutene to an MTBE reactor means,

(b) reacting in said MTBE reactor means methanol with isobutene under reaction conditions under liquid phase conditions employing an ion exchange resin catalyst, thereby producing a reaction stream comprising unreacted methanol, unreacted isobutene, and MTBE,

(c) feeding added n-butenes to a fractionation means,

(d) feeding said reaction stream to said fractionation means,

(e) fractionating in fractionating means said reaction stream with said added n-butenes, and taking an overhead vapor stream comprising unreacted isobutene and an azeotrope of said n-butenes with said unreacted methanol, wherein said n-butenes are present in an amount effective to take unreacted methanol overhead as an azeotrope, thereby producing substantially pure MTBE as liquid bottoms,

(f) withdrawing a sample stream from said fractionation means said sample stream taken from said fractionation means below the input of said reaction stream and above the outlet of said bottoms stream,

(g) monitoring the methanol content of said sample stream and generating a signal in response to the methanol content thereof,

(h) controlling the addition of said added n-butenes in said step (c) to said fractionation means in response to said signal, whereby said signal controls the increase or decrease of addition of said added n-butenes, thereby maintaining an effective level of said n-butenes in said fractionation means to maintain substantially methanol-free bottoms.

4,371,719

CURABLE MIXTURES BASED ON MALEIMIDES AND PROPENYL-SUBSTITUTED PHENOLS, AND THE USE THEREOF

Abdul-Cader Zahir, Oberwil, and Siegfried Wyler, Dornach, both of Switzerland, assignors to Ciba-Geigy Corporation, Ardsley, N.Y.

Division of Ser. No. 104,593, Dec. 17, 1979, Pat. No. 4,288,583. This application Feb. 23, 1981, Ser. No. 237,237

Claims priority, application Switzerland, Dec. 29, 1978, 13279/78

Int. Cl.³ C07C *39/16*

U.S. Cl. 568—723 **2 Claims**

1. A polyvalent phenol of the formula III

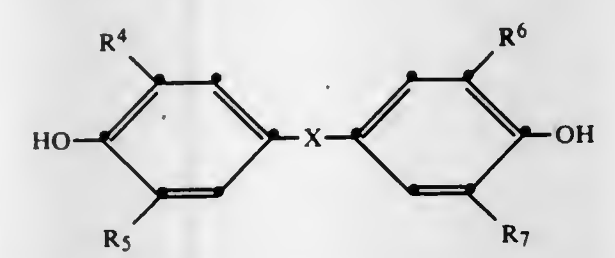

(III)

where R^4, R^5, R^6 and R^7 are each a hydrogen atom, or an allyl or propenyl group, with at least one of the substituents R^4 to R^7 being the propenyl group, and X is isopropylidene or methylene or of the formula IV

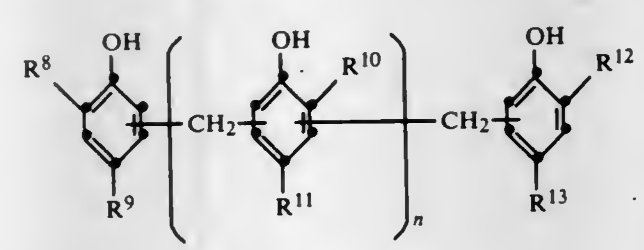

(IV)

wherein R^8, R^9, R^{10}, R^{11}, R^{12}, R^{13} are each a hydrogen atom, alkyl having 1 to 4 C atoms, allyl or propenyl, with at least one of the substituents R^8 to R^{13} being the propenyl group, and n denotes a value from 0 to 10 inclusive, which contains in the molecule at least one 1-propenyl group in the ortho- or para-position with respect to the hydroxyl group, or an isomeric mixture of said polyvalent phenols which are propenyl-substituted in the ortho- or para-position and polyvalent phenols which are allyl-substituted in the ortho- or para-position, the proportion of propenyl groups in the isomeric mixture having to be at least 5 equivalent-%, relative to the sum of the equivalents of propenyl and allyl groups.

4,371,720

2-HYDROXY-4-(SUBSTITUTED) PHENYL CYCLOALKANES AND DERIVATIVES

Michael R. Johnson, Gales Ferry, and Lawrence S. Melvin, Jr., Ledyard, both of Conn., assignors to Pfizer Inc., New York, N.Y.

Continuation-in-part of Ser. No. 188,795, Sep. 19, 1980, abandoned. This application Jul. 28, 1981, Ser. No. 286,661

Int. Cl.³ C07C *39/11*

U.S. Cl. 568—731 **10 Claims**

1. A compound having the formula

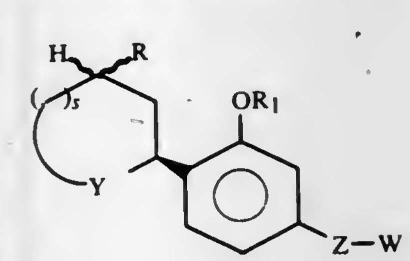

wherein

R is hydroxy, mandeloyloxy or alkanoyloxy having from one to five carbon atoms; carbon atoms;

s is an integer of 1 or 2;

Y is $—CH(R_2'')CH(R_2)—$ or $—CH(R_3)CH_2—$;

R_2'' is hydrogen or methyl;

R_2 is X-substituted alkyl having from one to six carbon atoms;

R_3 is X-substituted alkyl having from one to three carbon atoms;

X is $—OR_6$;

R_6 is hydrogen, alkyl having from one to six carbon atoms or acetyl;

W is hydrogen; and Z is

(a) alkylene having from five to thirteen carbon atoms; or

(b) $-(alk_1)_m$-O-$(alk_2)_n$- wherein each of (alk_1) and (alk_2) is alkylene having from one to thirteen carbon atoms; each of m and n is 0 or 1; with the provisos that the summation of carbon atoms in (alk_1) plus (alk_2) is not less than five or greater than thirteen.

4,371,721

SELECTIVE CRACKING OF DISUBSTITUTED BENZENES HAVING POLAR SUBSTITUENTS

Margaret May-Som Wu, Belle Mead, N.J., assignor to Mobil Oil Corporation, New York, N.Y.

Continuation-in-part of Ser. No. 969,745, Dec. 14, 1978, abandoned. This application Sep. 25, 1981, Ser. No. 305,570

Int. Cl.³ C07C *37/86, 17/38, 45/85, 85/26*

U.S. Cl. 568—750 **20 Claims**

1. A process for selective cracking of a 1,4-disubstituted benzene compound having a polar first substituent selected from hydroxy, formyl, halo and amino and a second substituent selected from halo and alkyl, in an isomeric mixture containing one or more additional isomers of said disubstituted benzene compound, said process comprising contacting said mixture with a crystalline zeolite catalyst at a temperature of between about 300° C. and about 450° C. and a pressure between about 10^4 N/m² and about 10^6 N/m², said catalyst being characterized by a silica to alumina ratio of at least 12 and a constraint index within the approximate range of 1 to 12.

20. A process according to claim 1, 2, 3, 4, 6, 7, 8, 9, 10, 11, 12, 13, 14, 15, 16, 17 or 18 wherein said disubstituted benzene compound has an alkyl non-polar substituent thereon and a hydroxy polar substituent thereon.

4,371,722

CYCLIC TERPENOID AMINES, THEIR PREPARATION AND USES

Bernard J. Kane, Atlantic Beach, and Richard A. Von Genk, Jacksonville, both of Fla., assignors to SCM Corporation, New York, N.Y.

Division of Ser. No. 130,374, Mar. 14, 1980, Pat. No. 4,307,255, which is a division of Ser. No. 860,284, Dec. 14, 1977, Pat. No. 4,244,890. This application Jun. 26, 1981, Ser. No. 277,815

Int. Cl.³ C07C *35/08*

U.S. Cl. 568—828 **8 Claims**

1. A process for making 1,3,3-trimethyl-2-methylene-cyclohexan-1-ol which comprises maintaining an acidic aqueous solution of an acyclic terpenoid group-containing amine represented by

$T_ANR_1R_2$

where T_A is a neryl group or a geranyl group, R_1 is a C_1–C_4 aliphatic group, R_2 is a monovalent organic group, or R_1 and R_2 are joined together and with N as a cyclic group, at a temperature of at least about 80° C., until said acyclic terpenoid group cyclizes, there being at least about 1.1 equivalents of acid per equivalent of said amine in said solution; recovering a mixture of alpha-, beta-, and gamma-cyclogeranylamines, reacting said mixture of amines with a carboxylic acid anhydride at about 70° C. to 250° C. to selectively form a beta-cyclogeranyl ester of a carboxylic acid and, as a by-product formed during said reaction, the cyclolinalyl ester of a carboxylic acid, recovering separately said beta-cyclogeranyl ester of a carboxylic acid, unreacted alpha-, and gamma-cyclogeranyl amines, and the cyclolinalyl ester of said carboxylic acid, and hydrolyzing the recovered cyclolinalyl ester by heating in the presence of an aqueous solution of an acid or a base to form 1,3,3-trimethyl-2-methylene-cyclohexan-1-ol.

4,371,723

PROCESS OF PRODUCING A DISTILLED BUTANEDIOL PRODUCT OF HIGH QUALITY IN HIGH YIELD

Max E. Chiddix, League City, Tex., assignor to GAF Corporation, New York, N.Y.

Continuation of Ser. No. 140,926, Apr. 16, 1980, abandoned, which is a continuation of Ser. No. 812,615, Jul. 5, 1977, abandoned, which is a continuation-in-part of Ser. No. 675,686, Apr. 9, 1976, abandoned. This application Aug. 6, 1981, Ser. No. 290,548

Int. Cl.³ C07C *31/20*

U.S. Cl. 568—861 **15 Claims**

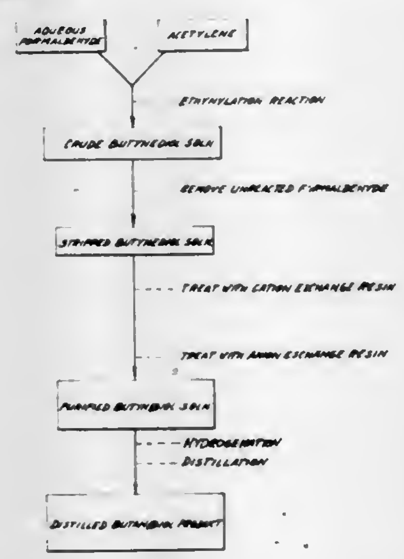

1. In the process of producing distilled butanediol product from an aqueous butynediol solution which contains metallic and formate ions, which process comprises hydrogenating said butynediol to butanediol and distilling said butanediol, the improvement which is characterized by:

treating said butynediol solution prior to said hydrogenation treatment with a cationic exchange resin to remove said metallic ion, and an anionic resin to remove formate ion, then hydrogenating and distilling the butanediol at about 160°–200° C. to obtain a distilled butanediol product having a purity of at least 99.7%, in a yield of at least 93%, and a residue which is fluid and pumpable at the distillation temperature for recycling or disposal thereof.

4,371,724

ETHANOL SYNTHESIS BY HOMOLOGATION OF METHANOL

Jiang-Jen Lin, and John F. Knifton, both of Austin, Tex., assignors to Texaco Inc., White Plains, N.Y.

Filed Jan. 8, 1981, Ser. No. 224,199

Int. Cl.³ C07C *27/00*

U.S. Cl. 568—902 **23 Claims**

1. A process for preparing ethanol which comprises contacting a mixture of carbon monoxide, hydrogen and methanol with a catalyst system comprising a ruthenium compound, a quaternary phosphonium or ammonium base or salt and a cobalt compound selected from the group consisting of cobalt(II) iodide, cobalt(II) bromide and cobalt(II) chloride, in the presence of an inert liquid oxygenated hydrocarbon solvent and at a pressure of 500 psi or greater and at a temperature of at least 150° C.

4,371,725
PROCESS FOR THE PREPARATION OF TERTIARY OLEFINS AND N-ALKANOLS
Jens Herwig, Cologne; Bernhard Schleppinghoff, and Hans-Volker Scheef, both of Dormagen, all of Fed. Rep. of Germany, assignors to EC Erdolchemie GmbH, Cologne, Fed. Rep. of Germany
Filed Dec. 2, 1981, Ser. No. 326,646
Claims priority, application Fed. Rep. of Germany, Dec. 19, 1980, 3048084
Int. Cl.³ C07C *29/00, 1/20*
U.S. Cl. 568—907 **12 Claims**

1. A process for preparing a tertiary olefin from the corresponding n-alkyl ether thereof which comprises contacting said n-alkyl ether with hydrogen in the presence of an acidic molecular sieve at a temperature from 100° to 300° C. and simultaneously removing the n-alkanol which forms.

4,371,726
COMPOSITION SUITABLE FOR MECHANICAL POWER TRANSMISSION AND PROCESS FOR OPERATING TRACTION DRIVES
Yoshiharu Horita, Tokyo; Kenichi Fujimoto, Kanda; Michio Hoshino, Yokohama; Tetsuo Takito, Kawasaki, and Masayoshi Muraki, Yokohama, all of Japan, assignors to Nippon Steel Chemical Co., Ltd. and Mitsubishi Oil Co., Ltd., both of Tokyo, Japan
Filed Jul. 16, 1981, Ser. No. 283,967
Claims priority, application Japan, Feb. 13, 1981, 56/18990; Feb. 13, 1981, 56/18991
Int. Cl.³ C10M *1/16, 1/20*
U.S. Cl. 585—3 **21 Claims**

1. A composition, suitable for use in mechanical power transmission units, consisting essentially of a minor amount of an antioxident in admixture with a hydrocarbon oil which has from 19 through 30 carbon atoms and three six-membered carbocyclic rings and consists of a mixture of compounds having the following formula:

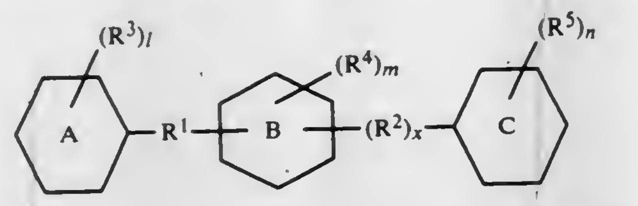

(I)

wherein R^1 is a divalent straight or branched chain radical C_yH_{2y} where y is an integer of 1 through 3; R^2 is a straight chain radical C_zH_{2z} where z is an integer of 1 through 3; R^3, R^4, and R^5 are the same or different alkyl groups having from 1 through 4 carbon atoms; l, m, and n each is an integer from zero through 3; and x is zero or 1; and wherein rings A and B are hydrogenated benzene rings and ring C is a hydrogenated benzene ring when x is 1 and a hydrogenated benzene ring or a cyclohexane ring when x is zero said hydrogenated benzene rings being saturated with hydrogen to the extent of at least 80% but less than 100% of the theoretical and said hydrocarbon oil being otherwise unsaturated.

4,371,727
FUEL OILS FROM COAL
Derek G. Gavin, Longhope, England, assignor to Coal Industry (Patents) Limited, London, England
Filed Oct. 7, 1980, Ser. No. 194,798
Claims priority, application United Kingdom, Oct. 19, 1979, 7936411
Int. Cl.³ C10L *1/08*
U.S. Cl. 585—14 **5 Claims**

1. A process for the production of Diesel fuel suitable for high speed engines, comprising hydrogenating over a hydrogenation catalyst at a temperature of 350° to 450° C. and a hydrogen pressure of 50 to 750 bars a fraction of a hydrocracked coal extract boiling in the range of 170° to 350° C., which fraction contains at least 90% of polycyclic hydrocarbons, contains a major proportion of naphthenes and does not contain any significant amount of mineral matter or paraffinic material, and fractionating the product hydrogenated oil using cut points within the range of 170° to 350° C. to yield a gas oil.

4,371,728
SELECTIVE REMOVAL OF OLEFINS OVER ZINC TITANATE PROMOTED WITH SELECTED METALS
Floyd E. Farha, Jr., and Lloyd E. Gardner, both of Bartlesville, Okla., assignors to Phillips Petroleum Company, Bartlesville, Okla.
Division of Ser. No. 190,004, Sep. 23, 1980, Pat. No. 4,313,820, which is a continuation-in-part of Ser. No. 125,438, Feb. 28, 1980, abandoned. This application Dec. 2, 1981, Ser. No. 326,776
Int. Cl.³ C07C *7/163*
U.S. Cl. 585—258 **15 Claims**

1. A process for hydrogenating olefin contaminants contained in a fluid stream comprising the step of contacting said fluid stream under suitable hydrogenation conditions with a catalyst composition comprising zinc titanate and at least one promoter selected from the group consisting of vanadium, chromium, manganese, iron, cobalt, nickel, molybdenum, rhenium, and compounds thereof, wherein the concentration by weight of said at least one promoter in said catalyst composition is less than the total concentration by weight of said zinc titanate in said catalyst composition.

4,371,729
METHOD FOR THE PREPARATION OF ETHYLBENZENE
Kazuo Shimizu, Yatabe, Japan, assignor to Agency of Industrial Science and Technology, Tokyo, Japan
Filed Jan. 6, 1982, Ser. No. 337,456
Claims priority, application Japan, Feb. 17, 1981, 56-22624
Int. Cl.³ C07C *2/64*
U.S. Cl. 585—453 **5 Claims**

1. A method for the preparation of ethylbenzene by the reaction of methyl alcohol and toluene which comprises bringing a gaseous mixture of methyl alcohol and toluene into contact with a catalyst composed of a carrier of activated carbon or alumina supporting potassium and either one or both of zinc and copper.

4,371,730
DEHYDROGENATION OF ORGANIC COMPOUNDS WITH A ZINC SILICATE CATALYST
Alan D. Eastman, Bartlesville, Okla., assignor to Phillips Petroleum Company, Bartlesville, Okla.
Filed Jun. 5, 1981, Ser. No. 270,697
Int. Cl.³ C07C *5/333, 5/367*
U.S. Cl. 585—627 **10 Claims**

1. A process for the catalytic dehydrogenation of at least one dehydrogenatable organic compound which has at least one

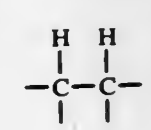

grouping comprising the step of contacting said at least one dehydrogenatable organic compound, under suitable dehydrogenation conditions in the substantial absence of free oxygen with a catalyst composition comprising zinc silicate.

4,371,731
ALKYLATION PROCESS
Stone P. Washer, Bartlesville, Okla., assignor to Phillips Petroleum Company, Bartlesville, Okla.
Filed Sep. 4, 1981, Ser. No. 299,427
Int. Cl.³ C07C *2/56*
U.S. Cl. 585—716 **9 Claims**

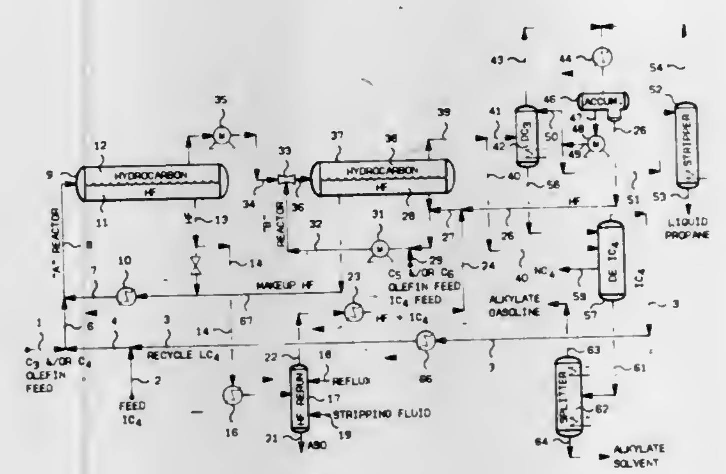

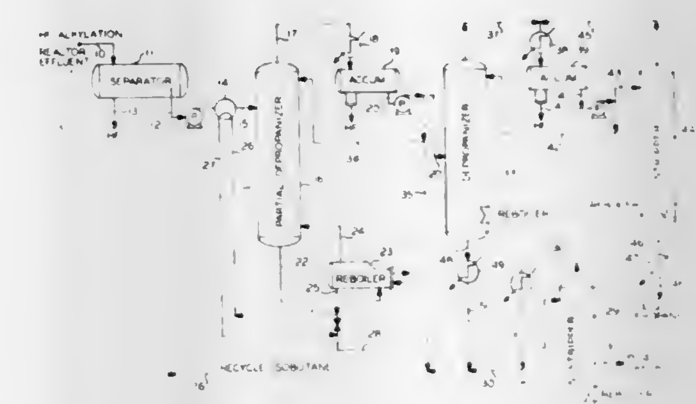

1. A combination process for production of motor fuel alkylate and solvent alkylate without detriment to motor fuel alkylate quality or quantity which comprises

(a) contacting an isoparaffin with an olefin comprising C_3 and/or C_4 olefins in the presence of an HF acid catalyst in a first alkylation zone under alkylation conditions which produce a motor fuel alkylate,

(b) separating the effluent product of (a) into an HF acid phase containing absorbed isoparaffin and a hydrocarbon phase comprising unreacted isoparaffin, light hydrocarbons, including normal paraffins, motor fuel alkylate, organic fluorides and HF,

(c) regenerating at least a portion of said HF acid phase in (b) in the presence of an isoparaffin under conditions which produce regenerated HF acid containing isoparaffins,

(d) contacting at least a portion of said regenerated HF acid containing isoparaffin with an olefin comprising C_5 and/or C_6 olefins in a second alkylation zone under alkylation conditions which produce solvent alkylate,

(e) mixing said solvent alkylate with said hydrocarbon phase in (b) in a mixing zone under conditions which produce an effluent reduced in said organic fluorides and containing additional alkylate,

(f) separating said effluent in (e) into an HF acid phase and a hydrocarbon phase, and

(g) subjecting said hydrocarbon phase in (f) to fractionation to separately recover alkylate products, isoparaffin, normal paraffins, and HF acid.

4,371,732
ALKYLATION PROCESS
Joe Van Pool, Bartlesville, Okla., assignor to Phillips Petroleum Company, Bartlesville, Okla.
Filed Aug. 28, 1981, Ser. No. 297,450
Int. Cl.³ C07C *2/58*
U.S. Cl. 585—723 **6 Claims**

1. An alkylation process comprising the steps of
contacting an olefin stream comprising butylenes containing C_3 hydrocarbons and an isoparaffin comprising isobutane with an HF acid alkylation catalyst under alkylation conditions to form an alkylate-containing alkylation effluent,
passing said effluent to a phase separation zone and allowing said effluent to separate into a hydrocarbon phase and an HF acid catalyst phase,
passing said hydrocarbon phase to a partial depropanizing zone wherein the hydrocarbon phase is separated into an overhead stream comprising propane, HF, and some isoparaffin, and a bottoms stream substantially free of HF comprising isoparaffin, normal paraffin, and alkylate,
condensing said overhead stream and passing at least a portion of the hydrocarbon condensate formed to a depropanizing zone operated under conditions to recover separately propane, HF, and isoparaffin for recycle to the alkylation,
passing another portion of said condensate as reflux to said partial depropanizer, and
passing the remainder of said condensate as at least a portion of the isoparaffin recycle to said alkylation.

4,371,733
Patent Not Issued For This Number

4,371,734
PREPARATION OF THIAZOLE DERIVATIVES
Guenther Seybold, Ludwigshafen, Fed. Rep. of Germany, assignor to BASF Aktiengesellschaft, Fed. Rep. of Germany
Continuation-in-part of Ser. No. 1,832, Jan. 8, 1980, abandoned. This application May 1, 1980, Ser. No. 145,790
Claims priority, application Fed. Rep. of Germany, Jan. 17, 1978, 2801794
Int. Cl.³ C07D *277/20*
U.S. Cl. 544—300 **4 Claims**

1. A process for the preparation of a thiazole derivative of the general formula

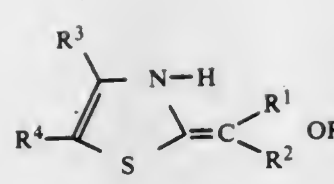

IA

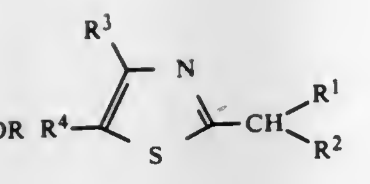

IB

where

R^1 and R^2 are cyano; formyl; nitro; C_1-C_8 alkanoyl, which is unsubstituted or substituted by chlorine, bromine or C_1-C_4-alkoxy; benzoyl which is unsubstituted or substituted by chlorine, bromine, methyl, ethyl, methoxy, ethoxy or cyano; naphthoyl; carboxylic acid ester groups derived from C_1-C_8-alkanols, C_2- to C_8-glycols, C_2-C_8-glycol ethers or phenols; carbamyl or sulfamoyl which is unsubstituted or substituted by C_1-C_8-alkyl, C_1-C_8-alkoxyalkyl, cyclohexyl or phenyl; C_1-C_4-alkylsulfonyl; C_1-C_8-alkylsulfinyl; phenylsulfonyl or phenylsulfinyl;

R^1 and R^2 may also together be a cyclic radical selected from the group consisting of

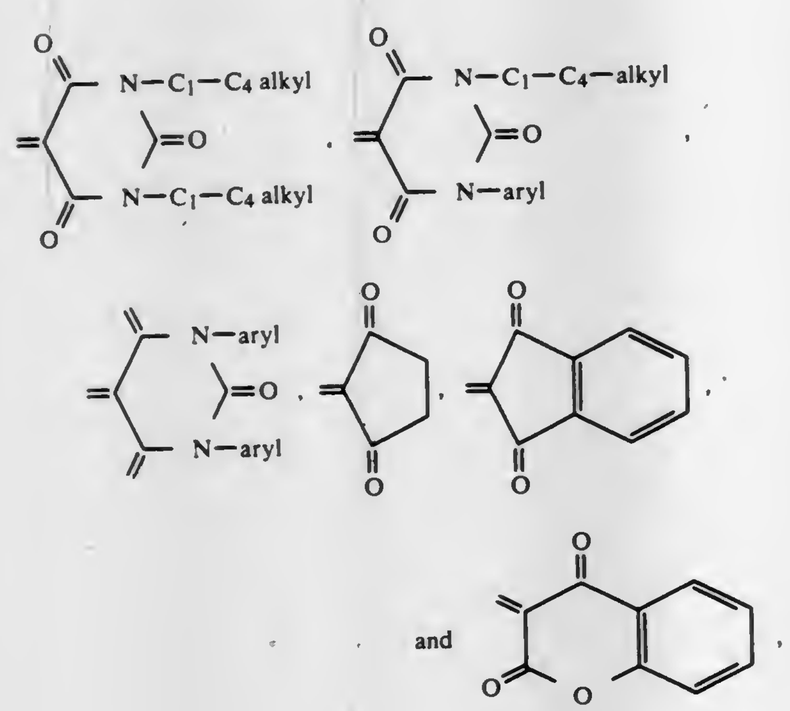

where aryl is phenyl which is unsubstituted or substituted by chlorine, bromine, methyl, ethyl, methoxy or ethoxy; and

R^2 may also be O_2N—C_6H_4, NC—C_6H_4, $CH_3COC_6H_4$,

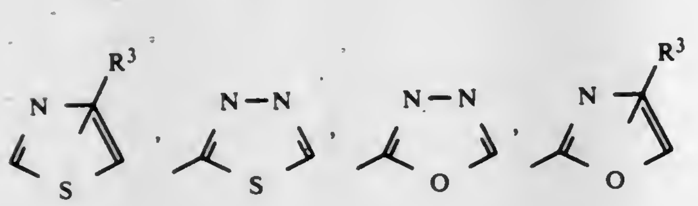

-continued

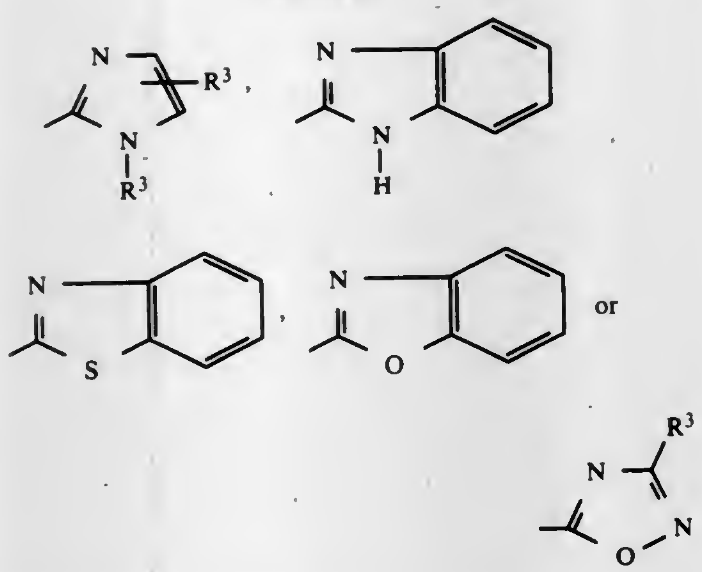

R^3 and R^4 are hydrogen, CH_3, C_2H_5, C_3H_7, C_4H_9, C_5H_{11}, C_6H_5, C_6H_{13}, C_7H_{15}, C_1-bis C_4-alkyl-OC_6H_4, (C_1-C_4-alkyl)$_2OC_6H_3$, Cl-$C_6H_4CL_2C_6H_3$, BrC_6H_4, $Br_2C_6H_3$, C_1-C_4-alkyl-S-C_6H_4, H_5C_6S-C_6H_4, C_1-C_4-alkyl-$CONHC_6H_4$, $COOCH_3$, $COOC_2H_5$, $COOC_3H_7$, $COOC_4H_9$, COC_6H_5, $COCH_3$ or CH_2-COO-C_1-C_4-alkyl; and

R^3 and R^4 may also together be a cyclic radical selected from the group consisting of

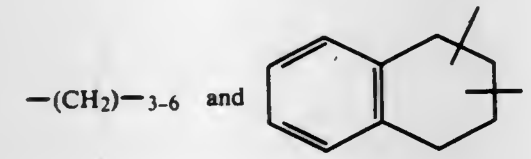

wherein a compound of the formula II

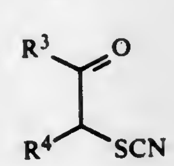

II

is reacted with a compound of the formula III

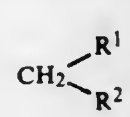

III

in the presence of a base selected from the group consisting of alkali metal compounds, alkaline earth metal compounds and amines.

4,371,735

PREPARATION OF PIGMENTS HAVING IMPROVED TECHNOLOGICAL PROPERTIES

Hans Scherer, Weisenheim; Wolfgang Lotsch, Beindersheim, and Gustav Bock, Neustadt, all of Fed. Rep. of Germany, assignors to BASF Aktiengesellschaft, Rheinland-Pfalz, Fed. Rep. of Germany

Continuation of Ser. No. 971,061, Dec. 19, 1978, abandoned. This application Jun. 6, 1980, Ser. No. 157,168

Claims priority, application Fed. Rep. of Germany, Dec. 24, 1977, 2757982

Int. Cl.³ C09B *57/04*

U.S. Cl. 544—300 **18 Claims**

1. Easily dispersible pigment with high tinctorial strength, of the formula

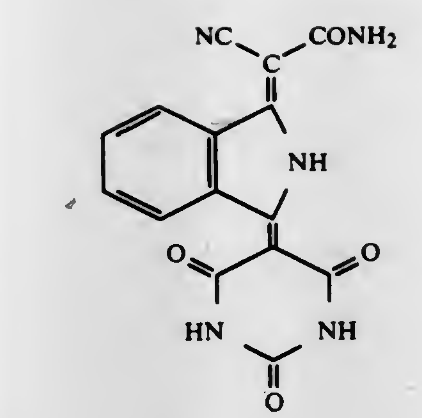

obtained by condensing 1-amino-3-imino-isoindoline with cyanoacetamide at pH >7 and then with barbituric acid at a pH of from 1.5 to 3.5 at from 20° to 150° C., wherein the condensation occurs in the presence of water or in water, and is carried out in the presence of from 5 to 400% by weight based on the barbituric acid, of a surfactant.

4,371,736

HERBICIDAL PYRIDINYLOXY(PYRIMIDINYLOXY)BENZENES

Thomas P. Selby, Hockessin, Del., assignor to E. I. Du Pont de Nemours and Company, Wilmington, Del.

Filed Mar. 27, 1981, Ser. No. 248,345

Int. Cl.³ C07D *239/32;* **A01N** *43/40*

U.S. Cl. 544—316 **8 Claims**

1. A compound of the formula:

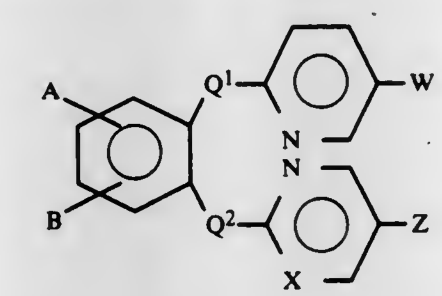

wherein

A is H, NO_2, F, Cl or Br;

B is H, C_1-C_4 alkyl, C_3-C_6 alkenyl, halogen, NO_2, CN, CHO, OR^1, COR^1, CO_2R^1 or SCN;

Q^1 is O or S;

Q^2 is O or S;

X is N or CH;

W is H, C_1-C_4 alkyl, C_3-C_4 alkenyl, F, Cl, Br, NO_2, CN, CF_3 or CO_2R^2;

Z is H, C_1-C_4 alkyl, C_3-C_4 alkenyl, F, Cl, Br, NO_2, CN, CO_2R^3 or CF_3; and

R^1, R^2 and R^3 are independently C_1-C_4 alkyl.

4,371,737

5-AMINOMETHYL-2,3-DIHYDRO-2-OXO-1H-IMIDAZOLE-4-CARBOXYLIC ACID DERIVATIVES

J. Martin Grisar; Richard A. Schnettler, and Richard C. Dage, all of Cincinnati, Ohio, assignors to Merrell Dow Pharmaceuticals Inc., Cincinnati, Ohio

Filed May 4, 1981, Ser. No. 260,445

Int. Cl.³ C07D *241/04, 233/04*

U.S. Cl. 544—370 **5 Claims**

1. A compound of the formula:

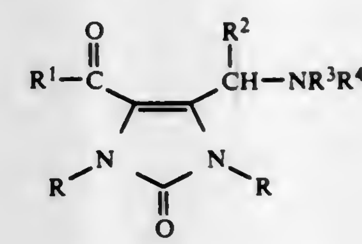

wherein R is hydrogen, lower alkyl of 1-4 C, lower alkanoyl of 2-4 C, or benzoyl; R^1 is hydroxy, lower alkoxy of 1-4 C, amino, (lower alkyl)amino, (lower alkyl)$_2$amino or —NHR_5 wherein R_5 is phenyl, methylphenyl, dimethylphenyl or methoxyphenyl; R^2 is hydrogen or lower alkyl of 1-4 C; and —NR^3R^4 is

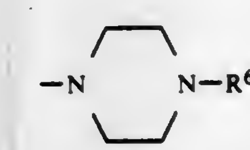

wherein R^6 is lower alkyl of 1-4 C, phenyl, halophenyl, methylphenyl, methoxyphenyl or trifluoromethylphenyl; and the pharmaceutically acceptable acid addition salts and the lower alkyl quaternary ammonium salts of the aforesaid compounds.

4,371,738

METHOD OF RESTORING DEGRADED SOLAR CELLS

David L. Staebler, Lawrenceville, N.J., assignor to RCA Corporation, New York, N.Y.

Filed May 4, 1981, Ser. No. 260,170

Int. Cl.³ H01L *31/18*

U.S. Cl. 136—243 **2 Claims**

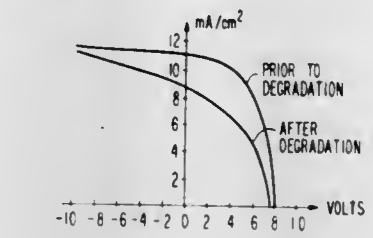

1. A process for restoring the efficiency of an amorphous silicon solar cell, said process comprising annealing the solar cell, whose efficiency has been degraded by long exposure to light, in air at a temperature greater than 100° C.

4,371,739

TERMINAL ASSEMBLY FOR SOLAR PANELS

Kathy Lewis, Canoga Park, and James E. Avery, Burbank, both of Calif., assignors to Atlantic Richfield Company, Los Angeles, Calif.

Filed Oct. 16, 1981, Ser. No. 311,816

Int. Cl.³ H01L *31/04*

U.S. Cl. 136—251 **27 Claims**

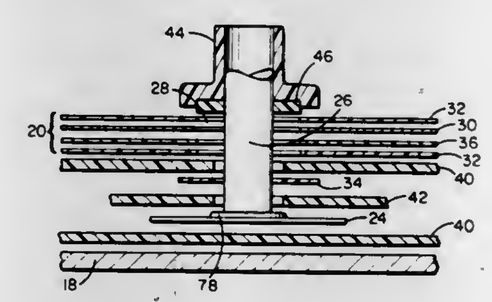

1. A solar panel comprising:
at least one solar cell;
an electrically conductive layer located behind the cell and defining an opening through the layer;
a terminal arrangement for establishing external electrical connection to the solar cell, including a substantially flat conductive portion electrically connected to the cell and located between the cell and the conductive layer at a location at least partially overlapping said opening, and a connector portion extending rearwardly from the flat portion through the opening; and
an insulating member of high dielectric strength positioned behind the flat portion and extending about the connector portion to electrically isolate the flat portion from the conductive layer.

4,371,740

CONDUCTIVE ELEMENTS FOR PHOTOVOLTAIC CELLS

Katherine V. Clem, Pittsford, N.Y., assignor to Eastman Kodak Company, Rochester, N.Y.

Continuation of Ser. No. 171,576, Jul. 23, 1980, abandoned. This application Feb. 16, 1982, Ser. No. 349,351

Int. Cl.³ H01L *31/06;* **B32B** *17/06*

U.S. Cl. 136—256 **7 Claims**

1. A conductive element comprising a soda-lime glass support having directly thereon a layer containing polycrystalline SnO_2 and from about 0.001 to about 5 weight percent of a fluorine-containing dopant, said conductive element being substantially haze-free and having a total transmittance to radiation between 400 and 800 nm greater than 70% and an electrical resistance less than 30 ohm/square.

5. A photovoltaic cell comprising contiguous crystalline semiconductive layers and the conductive element of claim 1 in operative, low-impedance contact with at least part of one of said layers.

4,371,741

COMPOSITE SUPERCONDUCTORS

Toshinari Ando; Masataka Nishi; Susumu Shimamoto, all of Tokaimura; Hiromichi Yoshida, Hitachi; Takashi Suzumura, Hitachi; Kimio Kakizaki, Hitachi; Ryozo Yamagishi, Hitachi, and Hisanao Ogata, Shimoinayoshi, Japan, assignors to Japan Atomic Energy Research Institute and Hitachi Cable, Ltd., both of Tokyo, Japan

Filed Feb. 10, 1981, Ser. No. 233,282

Claims priority, application Japan, Feb. 12, 1980, 55-14788

Int. Cl.³ H01B *7/34, 12/00*

U.S. Cl. 174—15 S **9 Claims**

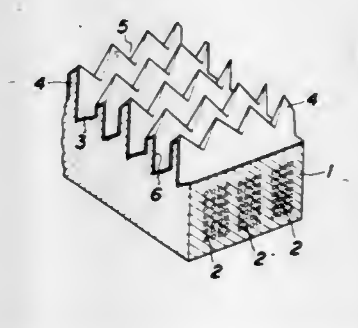

1. A composite superconductor including super-conducting material embedded in normal conducting material and having a surface adapted to be contacted by a refrigerant to cool said composite superconductor, said composite super-conductor further comprising:
a plurality of closely spaced grooves formed in said surface;
a plurality of ridges spaced from each other and defined by said grooves, each said ridge having an outer, acutely tapered end portion;
at least said acutely tapered end portion of each of said ridges having formed therein a plurality of closely spaced notches; and
at least a portion of the surfaces of said grooves, said ridges and said notches being coated with a thin film of metal or metallic compound having a higher heat resistance than that of said normal conducting material.

4,371,742

EMI-SUPPRESSION FROM TRANSMISSION LINES

William A. Manly, Arlington, Tex., assignor to Graham Magnetics, Inc., North Richland Hills, Tex.

Continuation of Ser. No. 862,342, Dec. 20, 1977, abandoned. This application Jul. 19, 1979, Ser. No. 59,047

Int. Cl.³ H01B *11/06*

U.S. Cl. 174—36 **48 Claims**

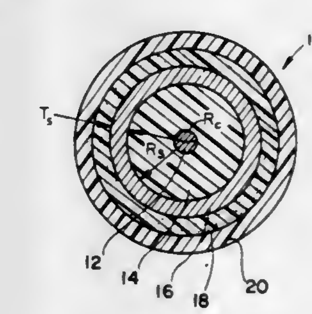

1. A flexible transmission line of the type utilized to transmit

electric current in the frequency range of 10^6 to 10^{10} hertz and comprising

(a) an electrical conductor

(b) electrical insulation around said conductor

(c) a metallic sheathing around said electrical insulation

and a coating means placed around said sheathing to absorb electromagnetic radiation emanating from said line, in the range of 10^6 to 10^{10} hertz, said means being formed of a shielding composition comprising ferromagnetic particles of above 20 microns in average maximum dimension in a resin matrix and said coating means being of such thickness that it has no substantial interference with the flexibility of said transmission line.

4,371,743

HINGED PULL-DOWN FUSE BLOCK ASSEMBLY

Earl L. Decker, Youngstown, Ohio, assignor to General Motors Corporation, Detroit, Mich.

Filed Mar. 27, 1981, Ser. No. 248,578

Int. Cl.³ B60K *37/00*

U.S. Cl. 174—52 R **5 Claims**

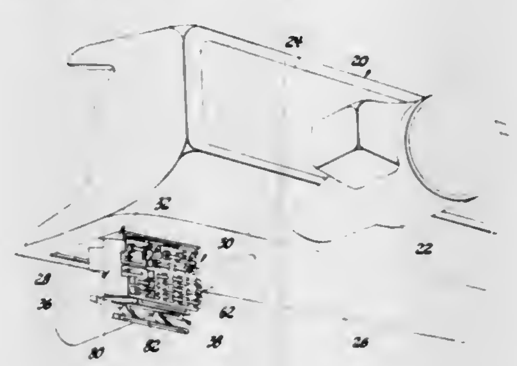

1. A fuse block assembly for an automotive vehicle having an instrument panel which projects toward the driver and has a generally vertical front wall,

said fuse block assembly comprising;

a bracket having a front wall and spaced side walls, said bracket being adapted to be attached to the vehicle behind the front wall of the instrument panel in a generally horizontal position,

a fuse block having one end hinged to the front wall of the bracket for movement about a horizontal axis between a generally horizontal position where the fuse block is stored between the side walls and a generally vertical position where the fuse block hangs below the instrument panel for easy access to replace the fuses and the like carried thereby, and

a manually releasable latch comprising a latch member for holding the fuse block in the stored position and a handle for operating the latch member,

said latch member being attached at the opposite end of the fuse block by a flex arm and engaging the bracket to hold the fuse block in the stored position, and

said handle being attached to the latch member by a rigid spar whereby the latch member moves away from the fuse block to release the latch member from the bracket and permit the fuse block to move to a generally vertical position.

4,371,744

SUBSTRATE FOR INTERCONNECTING ELECTRONIC INTEGRATED CIRCUIT COMPONENTS HAVING A REPAIR ARRANGEMENT ENABLING MODIFICATION OF CONNECTIONS TO A MOUNTED CHIP DEVICE

Bernard Badet, Belfort, and Karel Kurzweil, Eaubonne, both of France, assignors to Compagnie Internationale pour l'Informatique CII-Honeywell Bull (Societe Anonyme), Paris, France

Continuation of Ser. No. 948,110, Oct. 3, 1978, abandoned. This application Aug. 27, 1981, Ser. No. 296,835

Claims priority, application France, Oct. 3, 1977, 77 29687

Int. Cl.³ H05K *1/18*

U.S. Cl. 174—68.5 **5 Claims**

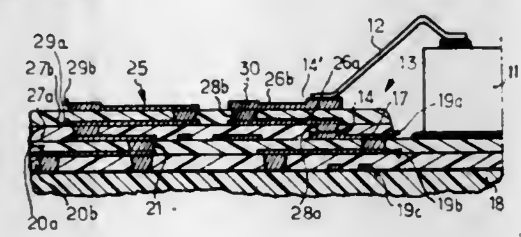

1. A substrate for interconnecting electronic integrated circuit components including a repair arrangement enabling modification of a connection to a mounted circuit component without removal thereof comprises:

an insulating layer **(18)**,

a first set of alternating, superimposed conductive and insulating layers **(*19a, 20a, 19b, 20b, 19c*)** overlying said base, said first set of layers including an uppermost first insulating layer **(*20a*)** adapted to have mounted thereon an integrated circuit component **(11)** having a plurality of finger-like conductors **(12)** and an uppermost first conductive layer **(19)** having a plurality of contacts **(14)** thereon defining a site location within which the circuit component is mounted,

at least one first interval through connection **(17)** within said site location and associated with at least a predetermined one of said contacts and being interconnected to said predetermined contact via said first conductive layer,

a second set of alternating superimposed conductive and insulating layers **(*29a, 27a, 29b, 27b*)** overlying said first set, said second set including an uppermost second insulating layer **(*27b*)** and an uppermost second conductive layer **(*29b*)**, a plurality of contacts **(14')** on said second conductive layer each adapted to be connected to an associated finger-like conductor **(12)**, conductor means for connecting one of said last named contacts **(14')** to said predetermined contact, said means including at least one second through connection **(*28a, 28b*)** in each insulating layer of the second set connected between the uppermost second conductive layer **(*29b*)** and an internal conductive layer **(*29a*)** of the second set, said second through connection having a part external of the site and accessible from the exterior of the substrate whereby the connection between the predetermined contact and the associated finger-like conductor may be modified without removing the mounted circuit component.

4,371,745

SHIELDED WIRE

Masao Sakashita, Kitamoto, Japan, assignor to Kabushiki Kaisha Kawai Gakki Seisakusho, Hamamatsu, Japan

Filed Nov. 7, 1980, Ser. No. 204,994

Claims priority, application Japan, Nov. 15, 1979, 54-157547[U]

Int. Cl.³ H01B *9/00*

U.S. Cl. 174—115 **4 Claims**

1. A shielded wire suitable for use with a pressure clip connector, said wire consisting of a first wire having an electrical insulation layer thereon, a ground wire, an electrically-conductive high molecular material layer covering said ground wire, an electrically-conductive material layer covering both said first wire with electrical insulation layer and said ground wire with electrically-conductive high molecular material layer; and an outer electrically-insulating layer covering said electrically-conductive material layer; said electrically-conductive

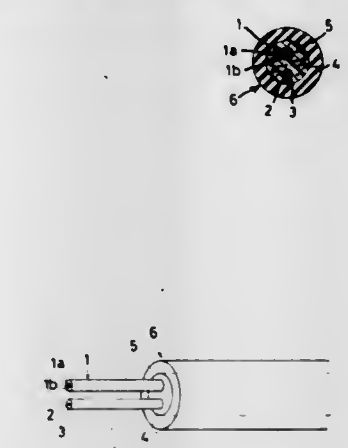

high molecular layer and said electrically-conductive material layer being in mutual contact so that they are mechanically separable from each other and are electrically connected to each other; said electrical-insulation layer and said electrically conductive high molecular material layer being substantially equal in thickness and diameter to each other.

4,371,746

EDGE TERMINATIONS FOR IMPEDANCE PLANES

William Pepper, Jr., Bethesda, Md., assignor to Peptek, Incorporated, Bethesda, Md.

Continuation-in-part of Ser. No. 867,256, Jan. 5, 1978, Pat. No. 4,198,539, which is a continuation-in-part of Ser. No. 759,931, Jan. 17, 1977, abandoned, which is a continuation-in-part of Ser. No. 14,450, Feb. 23, 1979, Pat. No. 4,293,734. This application Feb. 12, 1980, Ser. No. 120,605

Int. Cl.³ G08C *21/00*

U.S. Cl. 178—18 **9 Claims**

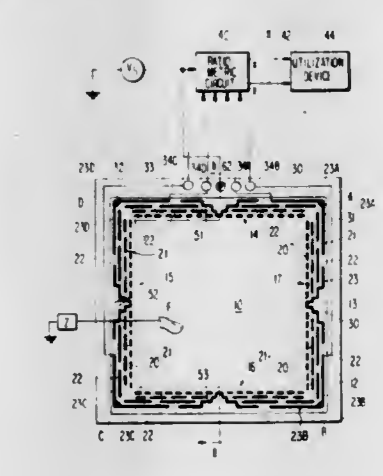

1. In a polygonal impedance surface for converting physical position information on said impedance surface to electrical signals, improvement in edge terminations for said polygonal surface comprising;

a plurality of parallel rows of conductive segments on each edge, respectively, of said polygonal impedance surface, with at least one outermost row conductor segment of adjacent edges being conductively connected together, and a connector terminal for connecting said at least one outermost row conductor of adjacent edges to an external electrical circuit.

4,371,747

AM STEREOPHONIC DECODER

Francis H. Hilbert, Addison, Ill., assignor to Motorola, Inc., Schaumburg, Ill.

Filed Mar. 24, 1980, Ser. No. 133,189

Int. Cl.³ H04H *5/00*

U.S. Cl. 179—1 GS **7 Claims**

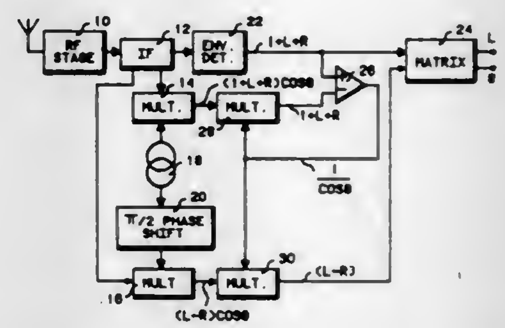

1. A receiver for receiving AM stereophonic signals of the form $(1+L+R)\cos(\omega_c t+\phi)$ where L and R are information signals, $\omega_c t$ is a carrier frequency, and ϕ is arc tan $\{(L-R)/)1+L+R)\}$, and comprising:

means for selectively receiving said stereophonic signals;

means coupled to the selective receiving means for detecting the amplitude modulation on the received signal;

means for providing two carrier signals in quadrature;

multiplier means coupled to the selective receiving means and to the carrier signal means;

amplifier means coupled to the amplitude detection means and the multiplier means for providing a correcting signal proportional to the inverse of cosine ϕ, said correcting signal being coupled back to the multiplier means for providing a pair of multiplier output signals which are substantially equal to $1+L+R$ and $L-R$; and

matrixing means coupled to receive the signals $(1+L+R)$ and $(L-R)$ and to provide output signals substantially equal to L and R.

4,371,748

DEVICE FOR ARTIFICIAL REVERBERATION

Eise C. Dijkmans, and Kornelis A. Immink, both of Eindhoven, Netherlands, assignors to U.S. Philips Corporation, New York, N.Y.

Filed Apr. 14, 1980, Ser. No. 140,269

Claims priority, application Netherlands, Apr. 24, 1979, 7903196

Int. Cl.³ G10K *11/00*

U.S. Cl. 179—1 J **17 Claims**

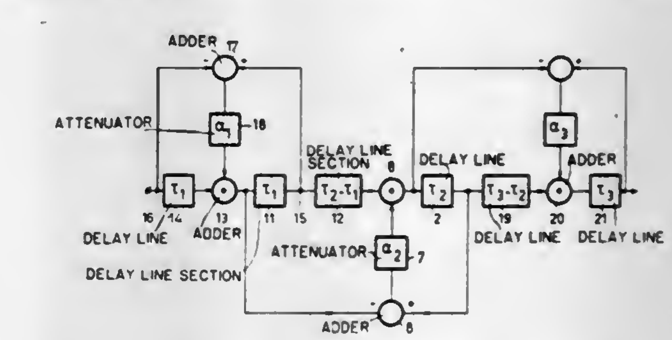

1. Artificial reverberation apparatus comprising first delay means, a first feedback circuit coupling an output of said first delay means to an input thereof to give a feedback factor of less than 1, second delay means having the same delay as does said first delay means and which couples a first circuit point to the input of said first delay means, a first transmission path coupling said first circuit point to the input of said first delay means so as to circumvent said second delay means, the ratio of the transmission factor of the signal path from said first circuit point to the input of said first delay means via said first transmission path to the transmission factor of the signal path from said first circuit point to the input of said first delay means via

said second delay means being equal but opposite to said feedback factor, third delay means comprising an input portion of the second delay means, a second feedback circuit coupling an output of said third delay means to an input thereof to give a second feedback factor of less than 1, fourth delay means having the same delay as does said third delay means and which couples a second circuit point to the input of said third delay means, and a second transmission path which couples said second circuit point to the input of said third delay means so as to circumvent said fourth delay means, the ratio of the transmission factor of the signal path from said second circuit point to the input of said third delay means via said second transmission path to the transmission factor of the signal path from said second circuit point to the input of said third delay means via said fourth delay means being equal but opposite to the second feedback factor.

4,371,749
CIRCUIT FOR PROCESSING ANGLE MODULATED BROADCAST SIGNALS
Laurel R. Lind, Auburn, Ind., assignor to Magnavox Consumer Electronics Co., Fort Wayne, Ind.
Filed Jun. 13, 1980, Ser. No. 159,360
Int. Cl.^{3} H04H *5/00;* **H04B** *1/10*
U.S. Cl. 179—1 GS **7 Claims**

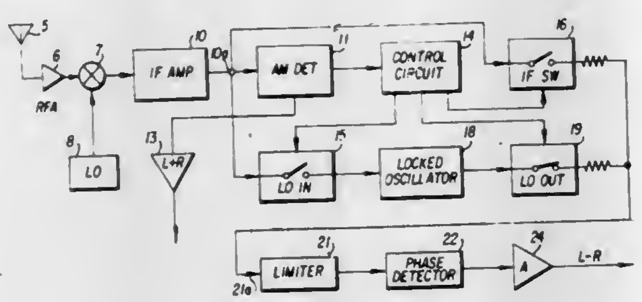

1. In a receiver for demodulating angle modulated signals, said receiver having a limiter means for removing amplitude excursions of said modulated signals, a circuit for maintaining said limiter with a signal during negative peak amplitude excursions of said angle modulated signals comprising:
- means for detecting a temporary loss in signal during said negative amplitude excursions to said limiter; and
- means for generating a substitute input signal having a frequency at substantially the frequency of said modulated signals for said limiter in response to the detection of said temporary loss in signal whereby said limiter supplies an amplitude limited substitute signal during said peak negative amplitude excursions.

4,371,750
MICROPHONE AND REMOTE CONTROL SYSTEM
John B. Markley, 2503 Valley Ave., Marion, Ind. 46952
Filed Jul. 24, 1980, Ser. No. 171,741
Int. Cl.^{3} G11B *19/16*
U.S. Cl. 179—1 VL **8 Claims**

1. An electrical control apparatus comprising a public address system having a microphone circuit, an amplifier and a speaker for audibly reproducing signals from said amplifier; a first gain control coupled between the microphone circuit and amplifier for controlling the amplitude of microphone signals from said microphone circuit; audio reproduction apparatus selectively connected to said amplifier for generating signals reproducible by said amplifier and speaker concurrently with said microphone signals; a first control function means for controlling the operation of said audio reproduction apparatus; said first control function means including a first switch and a second gain control; a hand-held accessory unit carrying said first gain control and said first control function means, said unit being remotely located with respect to said amplifier, speaker and audio reproduction apparatus; a connecting accessory also remotely located and carrying one or more electrical connecting devices each composed of male and female connectors, said connectors each including conductive contacts, said first gain control and said first control function means including first electrical leads connected between said hand-held unit and predetermined ones of said connecting devices whereby the microphone circuit and said audio reproduction apparatus may be controlled in reproducing audio signals from both concurrently,

said connecting devices further being connected between
- (a) said first gain control and said amplifier, speaker and audio reproduction apparatus,
- (b) between said first control function means and said amplifier, speaker, and audio reproduction apparatus, and between
- (c) said audio reproduction apparatus and said amplifier.

4,371,751
AUTOMATIC TELEPHONIC USER EMERGENCY MESSAGE TRANSMITTING APPARATUS
William R. Hilligoss, Jr., and Lawrence O. Hilligoss, both of Los Angeles, Calif., assignors to Newart Electronic Sciences, Inc., Minneapolis, Minn.
Filed Apr. 7, 1980, Ser. No. 138,129
Int. Cl.^{3} H04M *11/04*
U.S. Cl. 179—5 R **9 Claims**

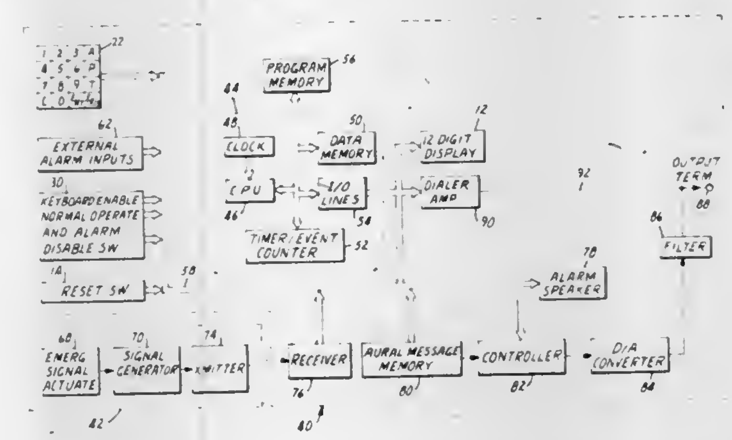

1. Apparatus for automatically transmitting over a telephone line aural messages humanly intelligible as spoken words and indicative of a user emergency, comprising a base station including
- (i) solid-state message storage means having digitally preencoded therein at least one aural message;
- (ii) converter means for providing an analog signal capable of generating an aural presentation of said message;
- (iii) keyboard means for inputting digital data representing at least one telephone number;
- (iv) signal processing means including
  - (a) solid-state digital data storage means;
  - (b) a clock means for providing an alarm-time-signal at a selected alarm time;
  - (c) means for generating a user-disabled-signal a given length of time after the occurrence of said alarm-time-signal;
  - (d) control means responsive to said user-disabled-signal for activating said data storage means to provide on an output terminal a signal train capable of initiating automatic dialing of at least one telephone number and for activating said message storage means to transmit on said output terminal said analog signal;
- (v) switch means activatable by a user for preventing the generation of said user-disabled-signal; and
- (vi) an alphanumeric display coupled to said keyboard means and to said signal processing means for enabling verification of keyboard entered data.

4,371,752
ELECTRONIC AUDIO COMMUNICATION SYSTEM
Gordon H. Matthews, Plano; Thomas B. Tansil, and Michael L. Fannin, both of Dallas, all of Tex., assignors to ECS Telecommunications, Inc., Dallas, Tex.
Filed Nov. 26, 1979, Ser. No. 97,240
Int. Cl.^{3} H04M *1/66, 3/42, 15/04*
U.S. Cl. 179—7.1 TP **51 Claims**

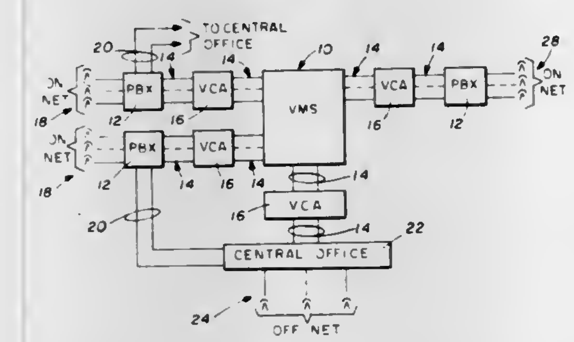

1. An electronic communication message system for being coupled to any private branch exchange or central office for receiving, storing and forwarding audio messages from users' telephone facilities, comprising:
- electronic digital signal processing means for controlling the operation of the message system;
- digital memory means controlled by said electronic digital signal processing means for storing digital representations of the audio messages;
- means for enabling an originator to access the message system through signals transmitted from a telephone station;
- means for controlling unauthorized user access to the message system;
- means for storing in said memory means digital representations of audio messages from the telephone station of the originator;
- said electronic digital signal processing means including means for timing a predetermined period of time so that the originator may generate an audio message and store digital representations of said audio message in said memory means;
- means for storing selected recipient telephone station addresses for digital representations of audio messages stored in said memory means;
- means for accessing said stored digital representations associated with particular telephone station addresses;
- means for reproducing the audio messages from the stored digital representations; and
- means for sequentially transmitting the reproduced audio messages to said selected recipient telephone stations.

42. An electronic communication message system for storing and forwarding audio messages via telephones comprising:
- a plurality of ports for being coupled to any private branch exchange or central office to receive audio messages and address signals which represent plural desired recipients from various telephone stations;
- means associated with said ports for converting said audio messages and address signals into digital signals;
- digital storage means for storing said digital signals representing audio messages and said address signals from each of said ports;
- means for accessing all digital signals representing audio messages stored in said storage means and associated with each address signal;
- electronic digital signal processing means for controlling the operation of said storage means and said accessing means;
- means for converting said access digital signals into audio messages; and
- means for sequentially transmitting all audio messages associated with an address signal through said ports to each of said plural desired recipients.

4,371,753
MINIATURE FLUID-CONTROLLED SWITCH
Ronald E. Graf, Rte. 3, Box 520, Crozet, Va. 22932
Continuation of Ser. No. 752,983, Dec. 21, 1976, abandoned. This application Nov. 27, 1978, Ser. No. 963,893
Int. Cl.^{3} F15C *1/16;* **H01H** *35/26;* **H04Q** *3/42*
U.S. Cl. 179—18 GF **15 Claims**

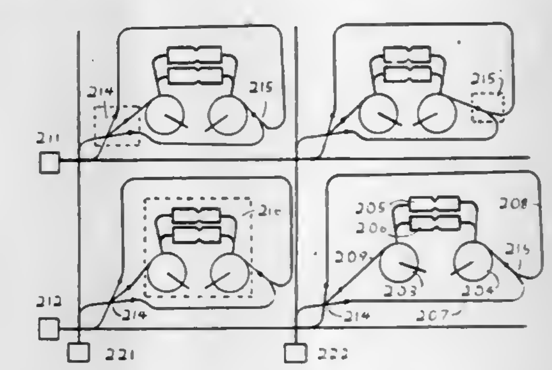

12. A switching system comprising units, a unit being a group of two or more transmission lines, for example a pair of electrically conducting lines which could cooperate to carry a telephone conversation, some of the units being members of a first set and the rest of the units being members of a second set with no unit being a member of both sets,
- a switch associated with each possible special pair of units, a special pair of units being one unit taken from said first set and one unit taken from said second set, the switches and the special pairs being in a one to one correspondence, each switch associated with a given special pair of units connecting one of the units in the pair to the other unit in the pair at all times when the switch is set, and being capable of disconnecting the one unit of the pair from the other unit of the pair when the switch is reset if additionally each unit of the pair is not connected to mutually connected units outside of the pair, the word "connect" meaning enable transmission between, and "the connecting of two units" meaning the connecting of the corresponding transmission lines within one unit to the corresponding transmission lines within the other unit, the switch being either set or reset at all times except during transition between the set and reset states, which states will be further defined later, the said switch associated with a given special pair of units being incapable working alone of connecting any pair of units other than its associated special pair,
- the switching system further comprising fluid carrying control lines in a one to one correspondence with the said units, which units are defined above,
- and a number of fluid logical devices, one and only one being associated with each switch, so that each said fluid logical device can be thought of as a part of the switch with which it is associated, each fluid carrying control line which corresponds to a given said unit communicating in a fluid sense with each and only those fluid logical devices associated with those switches which are capable acting alone of connecting that given unit with some other said unit, so that for each switch the two control lines, one

corresponding to each unit of the pair of units with which the switch is associated, both communicate directly in a fluid sense with the fluid logical device associated with that switch and those two control lines do not both communicate directly with the logical device associated with any other switch, the word "directly" meaning without both entering and leaving, i.e. flowing through, another of said fluid logical devices,

any given switch being set to connect the one unit in the associated special pair of units to the other whenever both fluid control lines entering the fluid logical device associated with the switch are activated for a sufficient time with fluid energy, any given switch being reset to disconnect the associated special pair of units whenever one but not the other fluid control line entering the logical device associated with the switch is activated for a sufficient time, with fluid energy, unless the said pair of units is also connected by means other than the given switch.

4,371,754
AUTOMATIC FAULT RECOVERY SYSTEM FOR A MULTIPLE PROCESSOR TELECOMMUNICATIONS SWITCHING CONTROL
Bimal B. De, Naperville; Lawrence G. Gierut, Lockport; Herbert B. Krakau, Elmhurst; Kirit Naik, Hanover Park, and Eddie Tan-Atichat, Westmont, all of Ill., assignors to Rockwell International Corporation, El Segundo, Calif.
Filed Nov. 19, 1980, Ser. No. 208,360
Int. Cl.³ G06F *11/20;* **H04M** *3/08*
U.S. Cl. 179—18 EE **29 Claims**

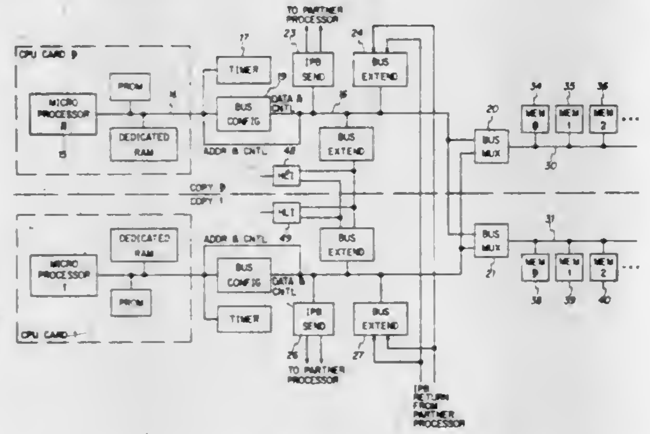

3. In a call switching system control complex, which includes multiple processors each having a processing unit and a memory unit, with at least one of said memory units having an active and a standby copy thereof, a fault recovery system comprising:

means, responsive to the processing unit in one of said processors reading data from a selected location in the active copy of an associated memory unit, for generating a return data parity error indication when the data read contains a parity error;

means for reading standby data from a location, in the standby copy of the associated memory unit, corresponding to said selected location in the active copy and writing the standby data into said selected active copy location; and

means upon a subsequent return data parity error indication in said one processor for switching the standby copy of the memory unit thereof, as available, to active status and the active copy thereof to standby status.

4. In a call switching system control complex, which includes a processor having a processing unit and a memory unit, with said memory unit having an active and a standby copy thereof, each with stored contents, a fault recovery system assuring that said standby copy is in condition to become active when required, comprising:

means, operational in the presence of ongoing call switching by said system, upon determination that call switching activities are presently not required of the processor, for initiating reading and storing a multiple byte portion of the contents of said standby copy;

means for comparing said portion read and stored with the contents of the comparable portion of said active copy; and

means, in the event said portions do not compare, for correcting the standby copy by writing contents of the active copy to the standby copy.

4,371,755
BRIDGE LIFTER CIRCUIT
Stephen J. Brolin, Livingston, N.J., assignor to Bell Telephone Laboratories, Incorporated, Murray Hill, N.J.
Filed Jan. 9, 1981, Ser. No. 223,904
Int. Cl.³ H04M *13/00*
U.S. Cl. 179—35 **7 Claims**

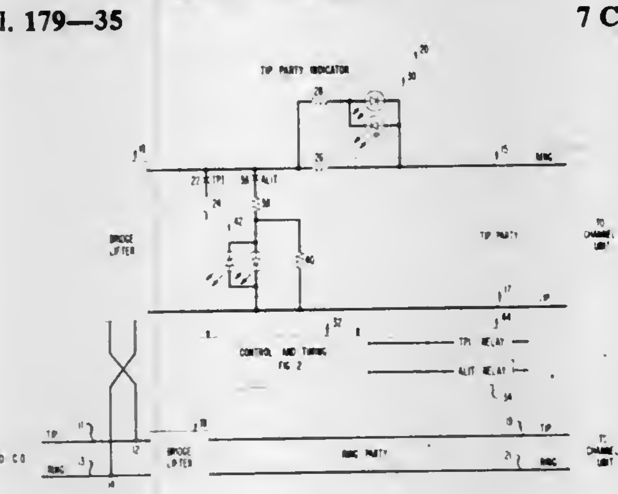

1. A two-party telephone circuit for subscriber loop carrier systems comprising

a shared pair of conductors **(11,13)**,

a pair of ring party conductors **(19,21)**,

a pair of tip party conductors **(15,17)**,

a first bridge lifter circuit **(18)** connecting said shared pair of conductors **(11,13)** directly to said pair of ring party conductors **(19,21)**,

a second bridge lifter circuit **(16)** connecting inverted shared pair of conductors to said pair of tip party conductors **(15,17)**,

automatic number identification circuit means **(20)** connected to said tip party conductors **(15,17)**, and

single-party channel means in said subscriber loop carrier system connected to each said ring party and said tip party conductors.

4,371,756
BRIDGE LIFTER MODULE
Michael C. Fasano, Syosset, N.Y., assignor to Porta Systems Corp., Syosset, N.Y.
Filed Feb. 27, 1981, Ser. No. 238,924
Int. Cl.³ H04M *13/00*
U.S. Cl. 179—35 **2 Claims**

1. A bridge lifter module for use in conjunction with a telephone connector block having exposed wire wrap pins for each of the tip and ring circuits of an individual subscriber pair, and a generally elongated projection on said block for each pair adjacent said wire wrap pins, said module, upon installation, being placed in series with said tip and ring circuits, comprising: a molded insulative housing element, said housing element having means for detachably engaging said projection on said block; said housing having a first recess, and an encapsulated bridge lifter circuit element secured within said recess; said housing having second and third recesses, each communicating with said first recess, there being first and second bores in said housing communicating with an outer surface of said housing and said second and third recesses; first and second elongated contact members disposed respectively in said second and third recesses, and positioned adjacent the inner ends of said first and second bores to selectively establish electrical communication between said contact members and said wire wrap pins on said block upon engagement therewith, said contact members also electrically communicating with said bridge lifter circuit element; said housing having third and fourth bores extending from outer surfaces of said housing to

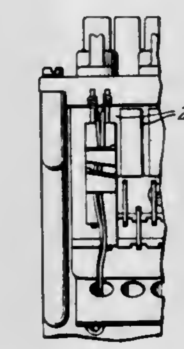

said first recess, and first and second wire wrap pins extending through said first and second bores to establish communication with said bridge lifter circuit element; said module, upon installation, engaging said pair of wire wrap pins on said connector block relating to an individual subscriber circuit in said first and second bores, conductors which normally would be engaging said wire wrap pins being in lieu thereof interconnected to said first and second wire wrap pins on said module.

4,371,757
ENCLOSURE FOR OUTDOOR CROSS-CONNECT SYSTEM FOR TELECOMMUNICATIONS
George Debortoli, Ottawa; Michael V. Meyerstein, Kanata, and Benne Velsher, Nepean, all of Canada, assignors to Northern Telecom Limited, Montreal, Canada
Filed Aug. 21, 1981, Ser. No. 294,838
Int. Cl.³ H04Q *1/14*
U.S. Cl. 179—98 **20 Claims**

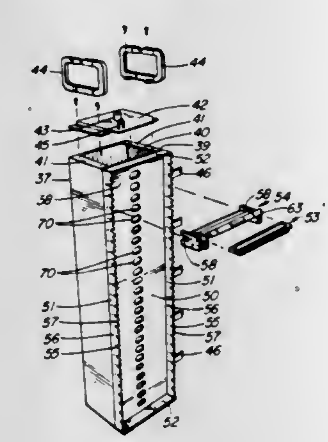

1. An enclosure for outdoor cross-connect apparatus, for telecommunications systems, said enclosure comprising:

a front, back and sides forming a rectangular housing, and a top on said housing;

at least one column in the housing;

cable entry and exit means to said housing; and a door in at least said front of said housing;

said column having a channel shaped back member and a mounting member hingedly attached to the front of the back member;

said mounting member having a back panel and forward extending side walls, each side wall having a plurality of slots extending part way from a front edge, and an aperture in each side wall inward of and aligned with each said slot, the slots in each side wall aligned in pairs to position connectors extending across the mounting member, a connector at each pair.

4,371,758
DEFECTIVE SHORT HOLDING-TIME TRUNK IDENTIFYING METHOD
Werner Ulrich, Glen Ellyn, Ill., assignor to Bell Telephone Laboratories, Incorporated, Murray Hill, N.J.
Filed Jun. 8, 1981, Ser. No. 271,366
Int. Cl.³ H04M *3/22, 3/36, 15/00, 15/38*
U.S. Cl. 179—175.2 C **30 Claims**

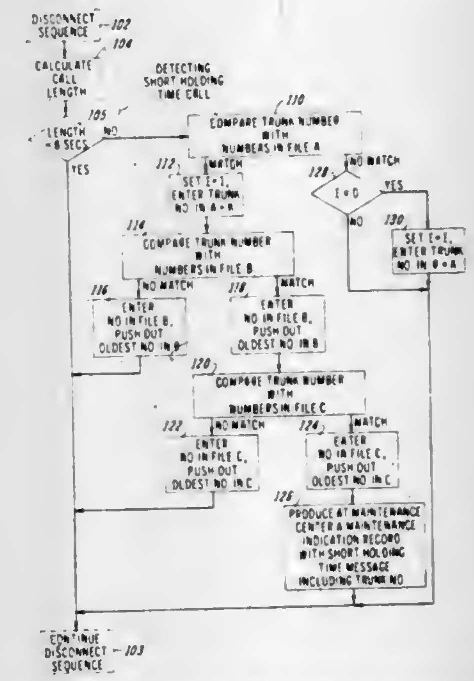

2. A method of automatically identifying a functional circuit recurrently engaged on short-duration communication calls comprising:

detecting communications of less than a prescribed duration served by said circuit, said detecting step comprising the steps of

calculating in response to a receipt of a call disconnect signal the elapsed time between the occurrence of a call answer signal and said disconnect signal, and

signifying when the calculated elapsed time is less than said prescribed duration;

processing the identity of said circuit through memory in response to the detected communications; and

producing a maintenance indication signifying the processed circuit identity involved in a predetermined plurality of said detected communications less than said prescribed duration.

4,371,759
ENCODING SWITCH
John T. Clark, Jr., Zion, Ill., assignor to Cherry Electrical Products Corporation, Waukegan, Ill.
Filed Jan. 7, 1981, Ser. No. 223,116
Int. Cl.³ H01H *9/26*
U.S. Cl. 200—5 R **18 Claims**

1. An encoding switch for generating signals corresponding to the binary bits of a code word, comprising:

base means for supporting a plurality of pairs of terminals, each pair of terminals including

a conducting stationary terminal and

a conducting movable terminal positioned adjacent said stationary terminal for deflecting to conductively contact the stationary terminal; and

encoding means for slidingly engaging said base means to generate said signals for a particular code word, the encoding means including a plurality of selectively detach-

able tabs, each tab for pressing a corresponding movable terminal into conductive contact with its associated adja-

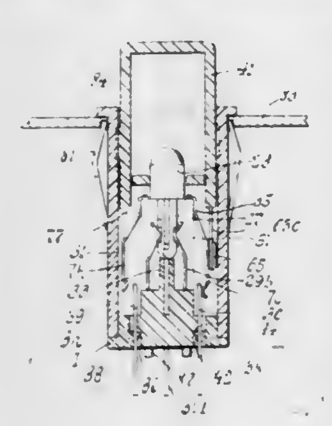

cent stationary terminal when the encoding means is slidingly engaged with the base means.

4,371,760
KEYBOARD SWITCH HAVING COMBINED ACTUATOR AND JUMPER CONTACT STRUCTURE

Michael Muller, Newport Beach, Calif., assignor to Apple Computer, Inc., Cupertino, Calif.
Filed Mar. 5, 1981, Ser. No. 240,926
Int. Cl.³ H01H *13/70*
U.S. Cl. 200—5 A 15 Claims

1. In a sandwich type keyboard switch assembly including a printed circuit board with printed circuit conductors thereon, an apertured separator overlying said printed circuit board, a contactor assembly overlying said separator, and a cover layer and indicia member overlying said contactor assembly, an improved contactor assembly comprising:

a plurality of actuators each of which is provided with at least two depending contact fingers, the free ends of which are bent such that they are at least in part substantially parallel to the surface of a printed circuit conductor therebeneath, with the larger portion of the length of said contact fingers disposed at an angle with the plane of said actuator, whereby depression of said actuator will cause said fingers to pass through an aperture in said separator and make electrical contact with the same circuit conductor on said printed circuit board, and further depressing of said actuator will cause the free end of said contact fingers to move laterally across the surface of said circuit conductor;

contact jumper means integrally formed with said plurality of actuators for selectively electrically coupling circuit conductors disposed on said printed circuit board;

each of said actuators being integrally formed with and electrically connected to a bus.

4,371,761
ELECTRIC DISPATCHERS

David Volcovici, 65-45 Yellowstone Blvd., #1B/T2, Forest Hills, N.Y. 11375
Continuation-in-part of Ser. No. 925,986, Jul. 19, 1978, abandoned, which is a continuation of Ser. No. 780,057, Mar. 22, 1977, abandoned. This application Mar. 16, 1981, Ser. No. 244,279
Int. Cl.³ H01H *7/00, 19/00, 43/00*
U.S. Cl. 200—27 BA 6 Claims

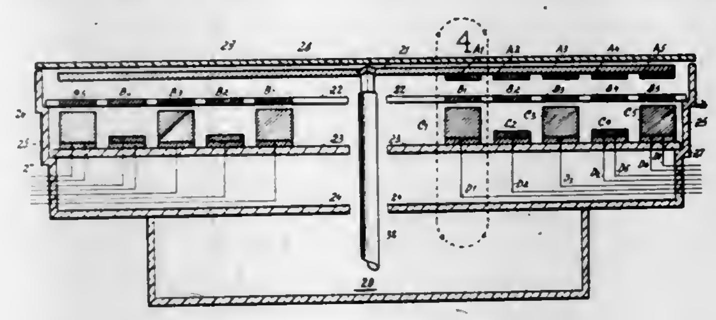

1. An Electric Dispatcher or Electric Kaleidoscope switching assembly with magnets for controlling the timing of one minute luminous advertising, luminous displays or other electrically actuated apparatus, the settable and resettable one minute switching system comprising:

a source of electric energy,

a programmable electric clock means for connecting said source to the displays and for controlling the operation of the displays or of other electrically actuated apparatus, the programmable electric clock means further comprising:

(a) a housing means having a clock box compartment and electric program timing connector means compartments disposed in three levels,

(b) said electric program timing connector means compartments having two ledges on said housing means,

(c) a rotatable commutator arm connector activating means detachably mounted to a clockshaft above an electric grate means,

(d) an electric grate means connected to said source of energy supported by the upper ledge of the housing means and consisting of concentric metal rings united by transversal bars, and a sectorized time unit cylindrical plate supporting connector timing means,

(e) said connector timing means mounted in concentric circles on said sectorized time unit plate, said connector timing means consisting of an unmovable part screwed to the underlying plate, and a movable part attached by a hinge to the unmovable part and lying reversed over the unmovable part,

(f) rotation of said rotatable commutator arm connector activating means across any sector of the concentric circles of connector means causing the energizing of unbarred electrical connector means with said grate means, thereby activating desired displays or the like.

4,371,762
CONTACTLESS PRESSURE SENSITIVE SWITCH

John A. Diamond, Glenview, Ill., assignor to Vapor Corporation, Chicago, Ill.
Filed Jul. 26, 1979, Ser. No. 60,924
Int. Cl.³ H01H *3/16, 9/00;* E05F *15/02*
U.S. Cl. 200—61.43 8 Claims

7. The combination comprising

a door including a sensitive edge,

said sensitive edge including a resilient, deformable body defining an interior fluid filled chamber,

a communicating conduit extending from said chamber,

a switch for recycling said door in fluid communication with said conduit,

said switch including a housing defined by upper and lower housing portions,

a diaphragm mounted in said housing defining first and second chambers in said housing, said first and second chambers being ported to the atmosphere,

a first magnet secured to said diaphragm,

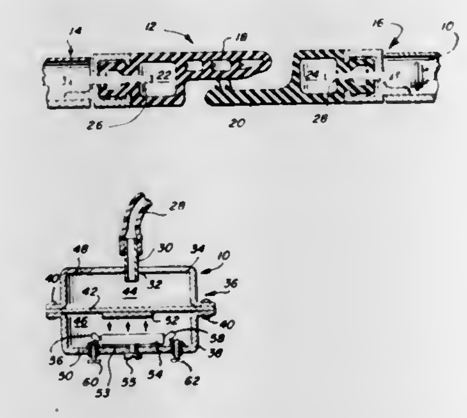

a switching module generating an electrical current pulse actuated by the flux of said first magnet secured in said housing, a second magnet mounted adjacent said module, said second magnet is of a lesser strength than said first magnet.

4,371,763
INERITA SWITCH DEVICE

Peter R. Jackman, Basingstoke, and David W. Crick, Addlestone, both of United Kingdom, assignors to First Inertia Switch Limited, England
PCT No. PCT/GB80/00117, § 371 Date Mar. 13, 1981, § 102(e) Date Feb. 23, 1981, PCT Pub. No. WO81/00325, PCT Pub. Date Feb. 5, 1981
PCT Filed Jul. 10, 1980, Ser. No. 243,911
Claims priority, application United Kingdom, Jul. 13, 1979, 7924490
Int. Cl.³ H01H *35/02*
U.S. Cl. 200—61.45 R 17 Claims

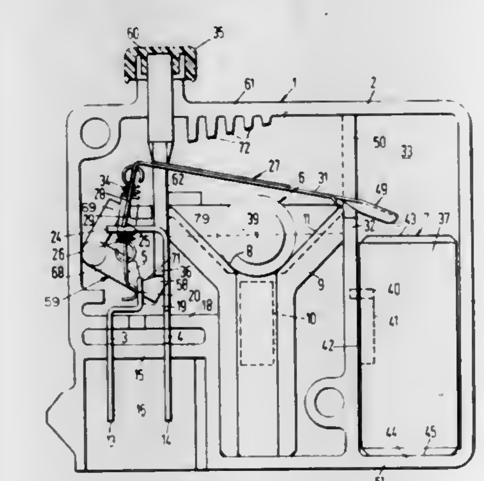

1. An inertia switch device comprising:

(a) an inertia mass which is movable from a rest position when the device is subjected to an applied acceleration or deceleration in a horizontal plane;

(b) means for retaining the inertia mass in the rest position until the applied acceleration or deceleration in a horizontal plane exceeds a threshold value;

(c) a first electrical contact movable between a first stable position in which it engages a second electrical contact and a second stable position in which it no longer engages the second electrical contact;

(d) support means having a bifurcated portion on which is pivotally mounted a bifurcated portion of the first electrical contact;

(e) operating means engageable by the inertia mass on movement of the inertia mass as a result of the applied acceleration or deceleration exceeding the threshold value, to move the first electrical contact from the first to the second stable position, or vice versa;

(f) the operating means comprising a first limb which is struck by the inertia mass when the threshold value is exceeded and a second limb having bifurcated portion which is pivotally mounted on the support means but on the opposite side to the first electrical contact;

(g) resilient biassing means which lies within the bifurcated portions and extends between the first electrical contact and the second limb and can be moved over center so as to bias the first electrical contact towards the first or second stable position depending on the position of the second limb; and

(h) resetting means comprising an operating member arranged to actuate a linkage which engages the resilient biassing means intermediate its ends to push the resilient biassing means over center and thereby return the first electrical contact to its original stable position.

4,371,764
IGNITION CIRCUIT DEENERGIZING SPRING FOR GAS APPLIANCE VALVE-SWITCH

Cleaston L. Runion, Cleveland, Tenn., assignor to Brown Stove Works, Inc., Cleveland, Tenn.
Filed May 28, 1981, Ser. No. 267,747
Int. Cl.³ H01H *9/06*
U.S. Cl. 200—61.86 10 Claims

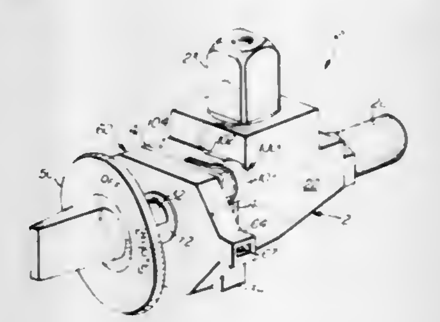

1. In a valve-switch assembly for igniting and controlling the flow of gas to a gas appliance or the like, said valve means including a valve body having an inlet, an outlet, and a valve member rotatably mounted in said body, said valve member being adapted to be manually rotated in opposite directions by a user between a position wherein said valve means is closed and a predetermined position wherein said valve means is substantially fully open, said valve member also having an abutment rotatable therewith, said assembly also including electrical switch means disposed at one end of said valve body and having an operating member rotatable with said valve member, and said electrical switch means also having contact means adapted to be connected to an associated electrical circuit for energizing said circuit and igniting gas being supplied to said gas appliance, the improvement comprising spring means carried by said valve-switch assembly and having an end adapted to be engaged by said abutment when said operating member and valve member are rotated to said predetermined, substantially fully open position, said operating member and valve member also being rotatable to an ignition position beyond said predetermined, substantially fully open position whereat the contacts of said switch are closed, said associated electric circuit is energized, and the flow of gas to said appliance is ignited, said spring means also having a resilient portion adapted to resist rotation of said operating member and said valve member beyond said predetermined, substantially fully open position, and said resilient portion of said spring means also being adapted to automatically rotate said operating member and said valve member from said ignition position to said predetermined, substantially fully open position whenever the torque applied to said valve member by a user to overcome the force of the resilient portion of said spring means is released.

4,371,765
ELECTRICAL SWITCH FOR LARGE CURRENTS
Klaus Ragaller, Neuenhof, Switzerland, assignor to BBC Brown, Boveri & Company, Ltd., Baden, Switzerland
Filed May 21, 1980, Ser. No. 151,874
Claims priority, application Switzerland, May 25, 1979, 4877/79
Int. Cl.³ H01N *33/18*
U.S. Cl. 200—147 R **7 Claims**

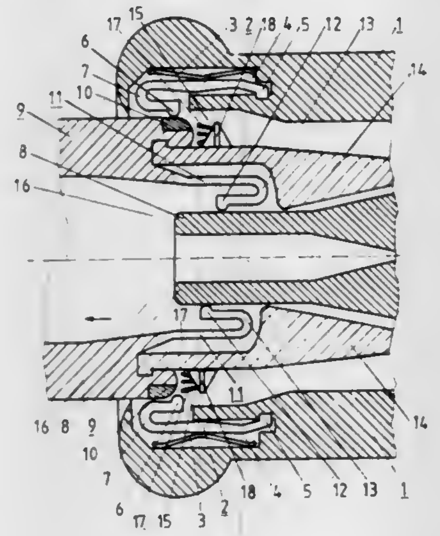

1. An electrical switch particularly adapted for conducting and breaking large currents, comprising:
a first rotationally symmetric contact piece having an annular recess therein;
a first plurality of contact elements disposed within said annular recess and extending in the axial direction of said first contact piece, each of said contact elements including one end in mechanical and electrical connection with said first contact piece, a contact surface at the other end thereof, and a loop-shaped region between said two ends;
a spring element respectively associated with each of said contact elements for urging said contact element in a radial direction;
a second rotationally symmetric contact piece that is selectively movable relative to said first contact piece from a first position, in which said second contact piece is in mechanical and electrical contact with the contact surface at said other end of said contact elements, to a second position in which said second contact piece is disconnected from said contact elements, whereby an electric arc that is generated during such movement is exposed to the blow-out effect of a magnetic field generated by the flow of current in said loop-shaped regions in said contact elements;
a third rotationally symmetric contact piece that is movable relative to said second contact piece as said second contact piece moves relative to said first contact piece, between said first and second positions;
a second plurality of contact elements each having one end connected to one of said second and third contact pieces, a contact surface at the other end thereof that is in mechanical and electrical contact with the other of said second and third contact pieces when the contact pieces are in said first relative position, and a looped shaped region between said two ends through which current flows to generate an arc-extinguishing magnetic field, said points of contact of the other ends of said second plurality of contact elements being displaced relative to those of said first plurality of contact elements such that two-stage commutation occurs during said relative movement from said first to said second position; and
means for quenching an arc disposed in an arc space adjacent the other end of at least one of said pluralities of contact elements.

4,371,766
PUFFER INTERRUPTER WITH TWO-PIECE INTERRUPTER CONTACT
Guido Huser, Birmenstorf, Switzerland, assignor to BBC Brown, Boveri & Company Limited, Switzerland
Filed Oct. 23, 1980, Ser. No. 199,740
Claims priority, application Switzerland, Oct. 25, 1979, 9576/79
Int. Cl.³ H01H *33/88*
U.S. Cl. 200—148 A **5 Claims**

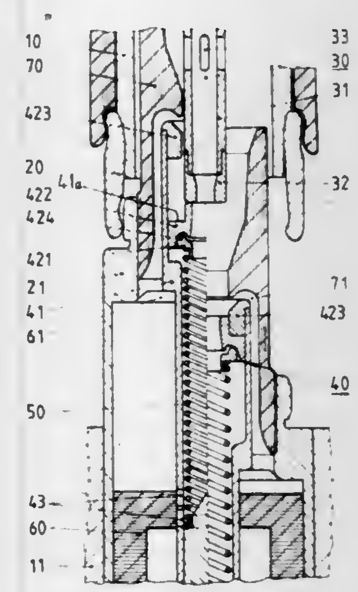

1. A puffer interrupter comprising, in combination: an elongated stationary arcing contact, a movable arcing contact assembly including first and second relatively movable members and a lost motion connection for connecting said first and second relatively movable members together, and an operating mechanism connected to said first relatively movable member and moving said first member toward and away from said stationary arcing contact; said first and second members slidably electrically connected to one another; said first member moving said second member into engagement with said stationary arcing contact through said lost motion connection whereby, after said second member impacts said stationary arcing contact, said first member continues to travel relative to said stationary arcing contact; said first member including an arcing ring which is spaced from said stationary arcing contact and which arcs to said stationary arcing contact during closing and before said second member impacts with said stationary arcing contact, whereby the mass of the portion of said movable arcing contact assembly which impacts with said stationary arcing contact during closing is reduced to the mass of only said second member to reduce contact closing bounce.

4,371,767
SMALL-SIZED SWITCH
Shigeo Ohashi, and Hiroyuki Suga, both of Tokyo, Japan, assignors to Nihon Kaiheiki Kogyo Kabushiki Kaisha, Tokyo, Japan
Filed Dec. 23, 1980, Ser. No. 219,774
Claims priority, application Japan, Dec. 31, 1979, 54-182245[U]
Int. Cl.³ H01H *21/12, 21/30*
U.S. Cl. 200—335 **3 Claims**

1. A small-sized switch comprising:
a switch body having a main hollow side portion and an upper portion,
a converter disposed within said switch body at its hollow side portion and slidably engaged with the inner surface of said upper portion of said switch body, said converter provided with a clip-shaped moving contact of an inverted U-shaped form and a spring biased slider,
a knob removaly connected to said converter through the opening of said upper portion of said switch body so that said converter is operable by said knob, and
a base plate adapted to be fitted in said switch body at its hollow side portion, said base plate being integrally provided with a cam plate for engaging with said slider to spring bias said converter toward said inner surface of said

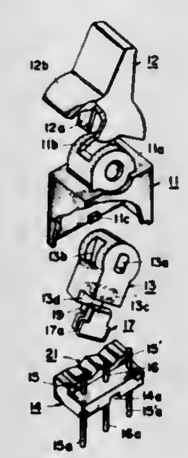

upper portion and having a plurality of fixed contacts each made of a wire in a round cross section anchored,
said moving contact adapted to be selectively and simultaneously brought into sliding contact with at least two adjacent fixed contacts of said plurality of fixed contacts to thereby effect switching operations.

4,371,768
ARRANGEMENT FOR THE SEALING OF THERMOPLASTIC-COATED PACKING MATERIAL
Laszlo Pozna, Malmö, Sweden, assignor to Tetra Pak International AB, Lund, Sweden
Filed Oct. 22, 1980, Ser. No. 199,504
Claims priority, application Sweden, Oct. 23, 1979, 7908752
Int. Cl.³ H05B *6/44, 6/14*
U.S. Cl. 219—10.53 **7 Claims**

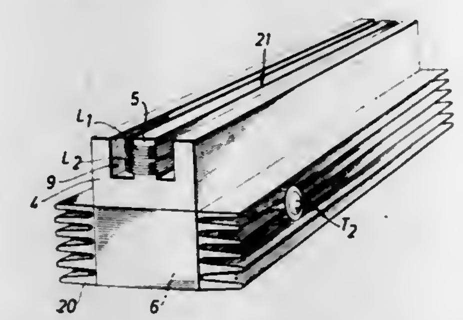

1. Apparatus for sealing thermoplastic packing material having an electrically conducting layer, comprising:
a sealing jaw including a magnetically conductive core having an E-shaped cross-section providing a middle limb which terminates at a surface that defines a sealing plane and a recess in said surface on either side of said middle limb that opens into said sealing plane; and
a parallel resonant oscillator circuit comprising a first winding and a capacitor connected in parallel, and further including a second winding inductively coupled to said first winding for controlling the flow of current through said first winding, both said windings being disposed around said middle limb and within the recess in said core adjacent said sealing plane and being substantially entirely surrounded by core structure except for the opening to said sealing plane.

4,371,769
MICROWAVE HEATING APPARATUS
Hirofumi Yoshimura, Nara; Junzo Tanaka, Fujiidera, and Nobuo Ikeda, Nara, all of Japan, assignors to Matsushita Electric Industrial Co., Ltd., Kadoma, Japan
Continuation of Ser. No. 47,997, Jun. 13, 1979, abandoned. This application Jul. 30, 1979, Ser. No. 62,243
Claims priority, application Japan, Jun. 13, 1978, 53/71697
Int. Cl.³ H05B *6/70*
U.S. Cl. 219—10.55 F **5 Claims**

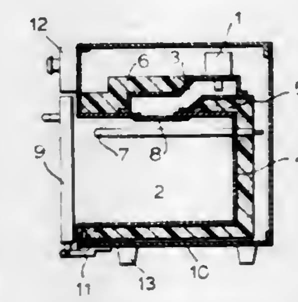

1. A microwave heating apparatus comprising:
a heating chamber in which an object to be heated is dielectrically heated by microwaves and having an opening in the top thereof for admission of microwaves;
a microwave generator for generating microwaves which are to be propagated to said heating chamber and disposed above said heating chamber;
a radiant energy heater located within said heating chamber for heating the object to be heated; and
a rectangular wave guide between said generator and said opening for guiding said microwaves generated by said generator into said heating chamber from above, said wave guide being bent generally in the shape of the letter Z and having two bends, said two bends being identical and the distance between said two bends within said wave guide being an odd number multiple of one-quarter of the wave-length of the microwaves within the wave guide and the portion of said wave guide other than the portion adjacent the opening into said heating chamber being spaced from the walls of said heating chamber.

4,371,770
ADJUSTABLE MICROWAVE OVEN DOOR SEAL
Charles L. Gilliatt, Lawrence, Mass., assignor to Raytheon Company, Lexington, Mass.
Filed Oct. 27, 1980, Ser. No. 201,668
Int. Cl.³ H05B *6/76*
U.S. Cl. 219—10.55 D **11 Claims**

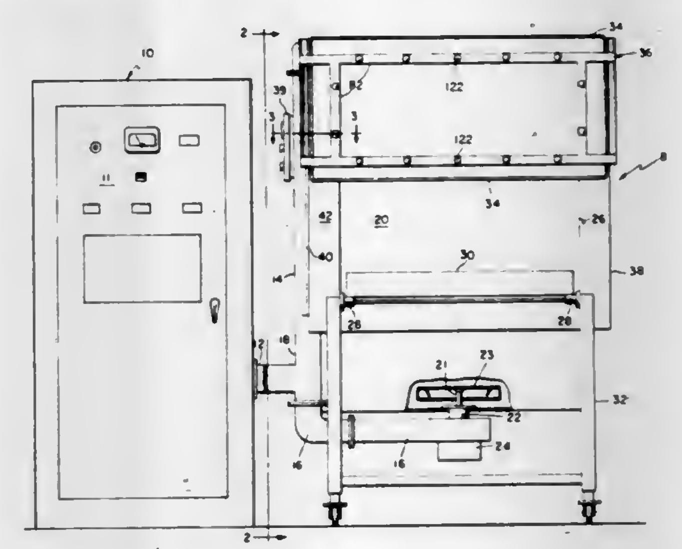

1. A microwave oven comprising:
a conductive cavity having an access aperture surrounded by a substantially planar conductive band;
a door covering said access aperture, a region of said door

overlapping said band, said region and said band having spatial separation defining a gap therebetween;
means for energizing said cavity with microwave energy;
a quarter-wavelength choke communicating with said gap wherein the entrance to said coke is substantially perpendicular to said band; and
means for independently adjusting the distance of said gap at a plurality of locations around said band.

4,371,771
CUTTING TORCH AND METHOD
Ernest C. Faccini, Marbury, Md., and Thomas E. Wergen, Granby, Conn., assignors to The United States of America as represented by the Secretary of the Navy, Washington, D.C.
Filed Nov. 10, 1980, Ser. No. 205,540
Int. Cl.[3] B23K *9/00*
U.S. Cl. 219—70 **12 Claims**

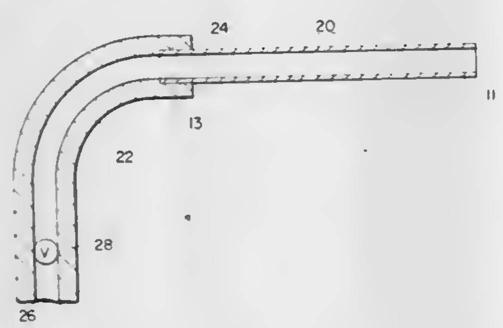

1. In a cutting torch in which a high-velocity flow of a reactive gas is used to promote combustion of a material and thereby removing a portion of said material, the improvement which comprises a barrel comprising an elongated hollow shell; and a single metal selected from the group consisting of aluminum and an aluminum alloy having at least 75 weight percent aluminum contained within said barrel, said aluminum or aluminum alloy having a surface area of at least about 80 sq. cm.

5. In a method for cutting or removing a metal which comprises raising the temperature of a portion of the surface of said metal to at least about 370° C. and impinging upon said portion a high-velocity stream of a reactive gas from a cutting torch wherein said high-velocity flow of a reactive gas promotes combustion of said metal, thereby removing a portion of said metal, the improvement which comprises selecting for said cutting torch a cutting torch which comprises a barrel comprising an elongated hollow shell and a single reactant metal selected from the group consisting of aluminum and an aluminum alloy having at least about 75 weight percent aluminum contained within said barrel, said reactant metal having a surface area of at least 80 sq. cm.

4,371,772
PLURAL SHAFT ELECTRODE SUPPORT FOR FUSING MACHINE
Charles F. Szantho, Roselle Park, and Edward D. Riordan, S. Somerville, both of N.J., assignors to Joyal Products, Inc., Linden, N.J.
Filed Nov. 3, 1980, Ser. No. 203,446
Int. Cl.[3] B23K *9/28*
U.S. Cl. 219—89 **18 Claims**

1. A fusing machine, comprising a frame; a fusing electrode assembly mounted for reciprocating movement relative to said frame in a first direction, in which said fusing electrode assembly moves towards a workpiece, and a second direction opposite to said first direction, said fusing electrode assembly including a first fusing electrode shaft, having an open end, a second fusing electrode shaft mounted for reciprocating movement relative to said first electrode shaft in said open end thereof, urging means removably positioned in said open end of said first fusing electrode shaft and interposed between said first fusing electrode shaft and said second fusing electrode shaft for urging said first and second fusing electrode shafts away from each other, holding means attached to said first fusing electrode shaft for holding a fusing electrode, and a stop member adjustably attached to said second fusing electrode shaft, said stop member cooperating with said frame in re-

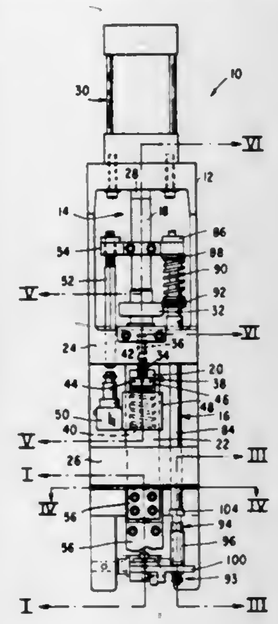

sponse to the reciprocating movement of said fusing electrode assembly in said first direction to limit the movement of said second fusing electrode shaft in said first direction; and moving means for moving said fusing electrode assembly in said first and second directions.

4,371,773
STUD WELDING DEVICE
Yoshiteru Kondo, Toyohashi, Japan, assignor to USM Corporation, Farmington, Conn.
Continuation of Ser. No. 54,707, Jul. 5, 1979, abandoned. This application Mar. 31, 1981, Ser. No. 249,376
Int. Cl.[3] B23K *9/20*
U.S. Cl. 219—98 **3 Claims**

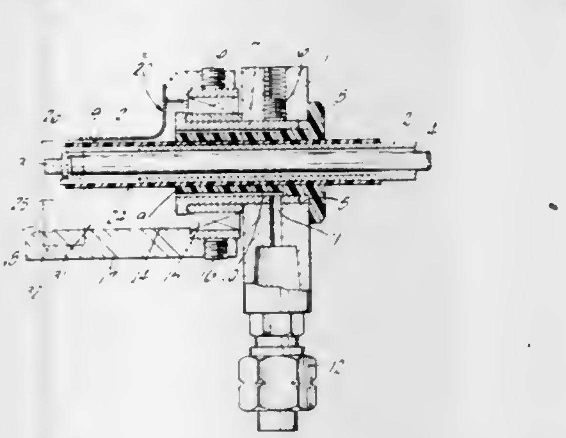

1. A stud welding device comprising a collet having a forward end portion with a tip adapted to hold a stud at the tip of the forward end portion thereof, a rotatable bearing assembly disposed about said forward end portion of said collet spaced from said tip, and a cylindrical welding guide disposed around said forward end portion of said collet and mounted on said bearing assembly for rotation about said collet, said welding guide having a cut-off adjacent its forward end to form a step in said guide, with an opening and an L-shaped cover plate disposed in said cut-off having one leg providing a surface adjacent to and substantially parallel with said collet to form a positioning surface and a second leg providing a surface normal to said positioning surface for covering the opening formed by said step.

4,371,774
HIGH POWER LINEAR PULSED BEAM ANNEALER
Michael D. Strathman, Concord; Devendra K. Sadana, Berkeley, and Richard B. True, Sunnyvale, all of Calif., assignors to The United States of America as represented by the United States Department of Energy, Washington, D.C.
Filed Nov. 26, 1980, Ser. No. 210,488
Int. Cl.[3] B23K *15/00;* **H05H** *7/06*
U.S. Cl. 219—121 EA **11 Claims**

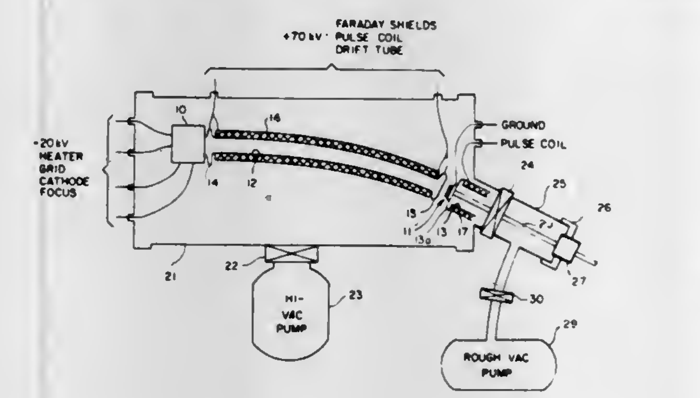

1. A high power pulsed electron beam system for annealing semiconductor surfaces to a predetermined depth comprising
an electron gun having a hot cathode and a control grid for producing a beam of electrons in response to a control pulse,
an extractor at the output of said gun maintained at a high voltage with respect to said cathode for accelerating electrons,
a first drift tube having an input end and an exit end, said input end for receiving said accelerated electrons, and a first coil surrounding said tube to focus the electrons about the axis of the tube in response to a dc current pulse applied to said first coil for a time spanning said control pulse, said drift tube and coil being maintained at the same voltage as said extractor,
a second drift tube axially aligned with the exit end of said first drift tube for receiving said accelerated and focused electrons, said second tube being spaced a predetermined distance from said first tube, and a second coil surrounding said tube to focus the electrons about the axis of the tube in response to a dc current pulse applied to said second coil for a time spanning said control pulse, the current of said second coil producing a magnetic field greater than the magnetic field produced by current through said first field, said second tube and coil being maintained at a reference voltage between the voltage of said cathode and said extractor,
means for holding a semiconductor to be annealed with its surface positioned in the deceleration region, and within the magnetic field of said second tube, said holding means being maintained at said reference, and
wherein said first drift tube is curved so that the exit end is off axis from the input end thereof, whereby said holding means positions a semiconductor to be annealed out of the line of sight of said cathode.

4,371,775
METHOD AND APPARATUS FOR PLASMA WELDING
Takao Mihara, Matsubara; Toshiaki Morichika, Hirakata, and Shigenori Sone, Nara, all of Japan, assignors to Kubota, Ltd., Osaka, Japan
Filed Apr. 6, 1981, Ser. No. 251,058
Claims priority, application Japan, Apr. 23, 1980, 55-54802
Int. Cl.[3] B23K *9/10*
U.S. Cl. 219—121 PK **4 Claims**

1. Method for plasma welding comprising the steps of forming a keyhole in the base metals being welded by a plasma arc produced from a plasma welding torch wherein the temperature of the cooling water to be passed into the plasma welding torch at the inlet side of the cooling system is controlled at a set temperature of more than 4° C. and less than 18° C., starting the plasma arc when the cooling temperature reaches the set

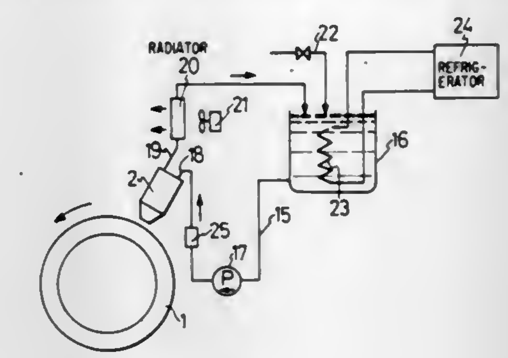

temperature, and starting the relative movement of the base metals and torch upon lapse of a specified time to form a keyhole after starting the plasma arc.

4,371,776
WELDING POWER SUPPLY
Jackie L. Winn, Florence, S.C., assignor to Union Carbide Corporation, Danbury, Conn.
Filed Jun. 26, 1981, Ser. No. 277,729
Int. Cl.[3] B23K *9/09*
U.S. Cl. 219—130.51 **9 Claims**

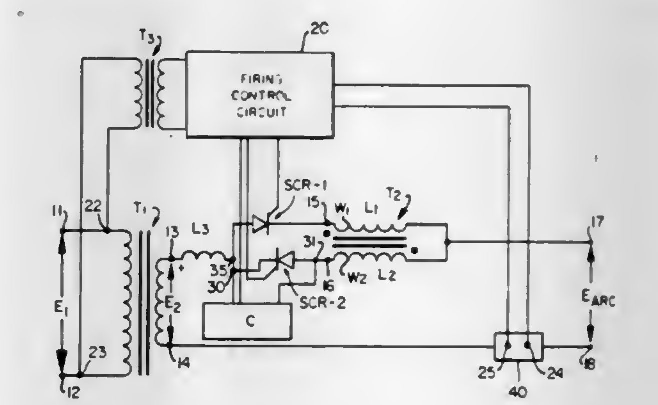

5. In a controllable power supply for supplying quasi square waves of alternating current to a welding arc between an electrode and a workpiece comprising:
a transformer including a primary winding for receiving a single phase A.C. current from a single phase A.C. power source and at least one secondary winding;
a first welding current path established between opposite ends of said secondary winding including at least one thyristor oriented in said first current path for preventing current flow from said workpiece to said electrode and for selectively rendering said first current path conductive for current flow from said electrode to said workpiece;
a second welding current path established between opposite ends of said secondary winding including at least one thyristor oriented in said second current path for preventing current flow from said electrode to said workpiece and for selectively rendering said second current path conductive for current flow from said workpiece to said electrode;
control means for firing said first current path thyristor for said rendering of said first current path conductive at a selected non-zero value of a positive polarity half cycle of the source voltage when said welding current is flowing from said workpiece to said electrode in said second current path and said first current path is nonconductive;
control means for firing said second current path thyristor for said rendering of said second current path conductive at a selected non-zero value of a negative polarity half cycle of the source voltage when said welding current is

flowing from said electrode to said workpiece in said first current path and said second current path is nonconductive whereby the non-zero value of negative polarity voltage across opposite ends of said first current path secondary winding renders said first current path thyristor nonconductive and the non-zero value of negative polarity voltage across opposite ends of said second current path secondary winding establishes current flow from said workpiece to said electrode;

wherein said control means renders said first and second current paths alternately conducting at each adjacent positive and negative polarity half cycle of the source voltage for supplying current in respectively opposite and mutually exclusive polarities to said arc;

inductor means connected in said first and second current paths such that when current is flowing from said electrode to said workpiece in said first current path said inductor means accumulates energy when the voltage across said opposite ends of said first current path secondary winding is greater than the welding arc voltage and dissipates accumulated energy when the voltage across said opposite ends of said first current path secondary winding is less than the welding arc voltage for self-inducing voltage to maintain current flow from said electrode to said workpiece and when current is flowing from said workpiece to said electrode in said second current path said inductor means accumulates energy when the voltage across said opposite ends of said second current path secondary winding is greater than the welding arc voltage and dissipates accumulated energy when the voltage across said opposite ends of said second current path secondary winding is less than the welding arc voltage for self-inducing voltage to maintain current flow from said workpiece to said electrode;

wherein the energy accumulated by said inductor means substantially equals the energy dissipated by said inductor means over a 360° cycle of said source voltage;

the improvement which comprises:

commutating means connected across said second current path thyristor cathode to anode for selectively rendering said second current path thyristor and thereby said second current path nonconductive whereby said inductor means accumulated energy provides a voltage across said electrode and said workpiece sufficient for reestablishing current flow from said electrode to said workpiece; and

control means for initiating said selective operation of said commutating means substantially simultaneously with said selective firing of said first current path thyristor.

4,371,777

CONTINUOUS FLOW ELECTRIC WATER HEATER

Hanno Roller, Kandel, and Karl-Heinz Nauerth, Erlenbach, both of Fed. Rep. of Germany, assignors to Fritz Eichenauer GmbH and Co. KG, Kandel, Fed. Rep. of Germany

Filed Dec. 3, 1980, Ser. No. 212,451

Claims priority, application Fed. Rep. of Germany, Dec. 3, 1979, 2948591

Int. Cl.^{3} F24H *1/12;* **H05B** *3/02*

U.S. Cl. 219—298 **14 Claims**

1. A continuous flow heater having a compound heating structure made up of at least two elongated generally parallelpiped-like shaped bodies of material with a high thermal conductivity, each such body having at least one heat input face and a fluidway running through it for fluid to be continuously heated, the bodies being positioned side-by-side with a heat input face of each body facing a heat input face of the next adjacent body and with the fluidways parallel to each other, at least one heating element positioned between each pair of facing heat input faces, and a casing forcing the bodies together with the heating element therebetween, wherein said casing is made up to two elongated channel-like casing halves, each half being U-shaped in cross section and having two side flanges running out from a floor part along the length of said bodies, the flanges of one casing half being permanently fixedly joined with those of the other casing half along substantially the entire length of the flanges so that the bodies and the heating element

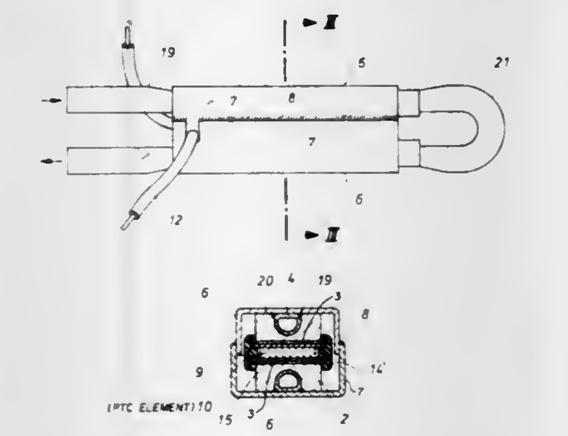

within the casing are acted upon by a force, transmitted by said casing through said bodies, normal to said facing heat input faces.

4,371,778

ELECTRIC HEATING DEVICE EMPLOYING PTC HEATING ELEMENT FOR PREHEATING OF HEATING OIL

Hans Meixner, Haar, and Andreas Schebler, Wuerzburg, both of Fed. Rep. of Germany, assignors to Siemens Aktiengesellschaft, Berlin & Munich, Fed. Rep. of Germany

Filed Sep. 4, 1979, Ser. No. 72,285

Claims priority, application Fed. Rep. of Germany, Sep. 15, 1978, 2840242

Int. Cl.^{3} F02M *31/12;* **H05B** *1/02, 3/14*

U.S. Cl. 219—302 **3 Claims**

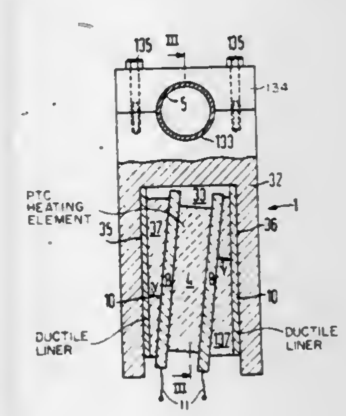

1. A heating device for the preheating of heating oil in a range from 0.3 to 2.5 liters/hour which comprises:

a heat conduction body having portions defining an interspace within said body;

a plate-shaped ceramic PTC resistance heating element received in said interspace and providing good heat conduction from both planar surfaces of said heating element, said ceramic PTC conductor heating element having a thickness of between 0.5 and 2 mm, a Curie temperature of between 120° and 220° C., and consisting of material having a specific resistance, ρ, of 430 to 5,000 ohm-cm, as measured at a voltage between 110 and 220 volts and at the Curie temperature of said material;

means for attaching said heat conduction body in heat exchange-relationship to a pipe conveying the oil to be heated; and

means for connecting said element to an electrical power source having a voltage between 110 and 220 volts,

whereby said heating device may be used to heat heating oil flowing in the pipe such that the maximum temperature attained by said heating element over a range of heat transfer rates from said heat conduction body is relatively constant and is determined by the resistivity and Curie temperature of the ceramic material and not by the rate of heat transfer.

4,371,779

ENERGY SAVING WATER HEATER CONTROL CIRCUIT

Arthur D. Maynard, P.O. Box 95, and Joseph L. Abrams, 960 Apple La., both of Altamonte Springs, Fla. 32701

Filed Sep. 19, 1980, Ser. No. 188,975

Int. Cl.^{3} H05B *1/02;* **F24H** *9/20*

U.S. Cl. 219—328 **4 Claims**

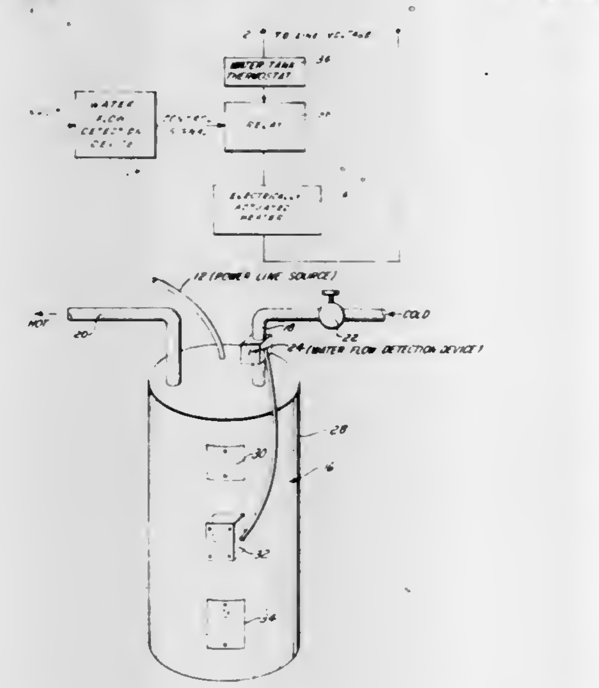

1. In a hot water heater having a tank provided with a cold water inlet and a hot water outlet and electrically operated heating means for heating water in said tank, the improvement comprising a control circuit for controlling operation of said heating means in response to water usage, said control circuit comprising a detection means for sensing water flow in one of the cold or hot water lines, thermostat means responsive to the temperature of the water in the tank for controlling operation of said heating means to heat said water to a predetermined temperature and thereafter deactivating said heating means, said control circuit including an electrically operated relay in circuit with said heating means and energized by said detection means to energize said heating means upon detection by said detection means of water flow indicative of the withdrawal of hot water from said tank, holding circuit means simultaneously energized with said relay by said detection means for maintaining said relay and heating means energized even should the flow of water stop, said thermostat means being in series with said relay and said holding circuit means and arranged to permit energization of said relay and holding circuit means only if the water in said tank is below the said predetermined temperature.

4,371,780

MULTI-ELEMENT COOKING UNIT WITH CONTROL DEVICE

Gerhard Gossler, Oberderdingen; Heinz Petri, Bretten, and Hans Mayer, Kurnbach, all of Fed. Rep. of Germany, assignors to E.G.O. Elektro-Berate Blanc u. Fischer, Fed. Rep. of Germany

Filed Oct. 23, 1980, Ser. No. 199,948

Claims priority, application Fed. Rep. of Germany, Oct. 27, 1979, 2943477; May 14, 1980, 3018416

Int. Cl.^{3} H05B *1/02*

U.S. Cl. 219—446 **8 Claims**

1. A glass ceramic cooking unit, comprising:

a glass ceramic hob having a substantially circular main heating element and at least one additional heating element arranged adjacent the main heating element, the main and the at least one additional heating elements together forming an elongated rectangular configuration;

a rotatably mounted setting shaft, rotatable over an angular range for regulating the heating elements;

a cam fixed on the setting shaft for rotation therewith, the cam having a shoulder extending therefrom;

a cam plate rotatably mounted on the setting shaft, the cam plate having an arcuate slot, defining the angular range, for slidably receiving the shoulder of the cam, the cam plate being rotatably driven by the cam whenever the shoulder engages either end of the arcuate slot, the cam and cam plate being otherwise relatively rotatable; and,

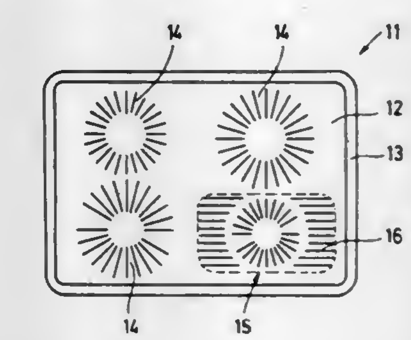

switching means having contacts operable in response to rotation of the cam plate into contact therewith, the setting shaft, cam, cam plate and switching means together forming a control device for the main and at least one additional heating elements, rotation of the setting shaft in the angular range regulating the main heating element, rotation beyond the angular range activating the at least one additional heating element, and further rotation thereafter in the angular range regulating both the main and at least one heating elements together.

4,371,781

APPARATUS FOR INTERCONNECTING AN ACTUATOR AND A POSTAGE METER

Charles M. Weimer, Norwalk, Conn., assignor to Pitney Bowes Inc., Stamford, Conn.

Filed Jul. 11, 1980, Ser. No. 167,518

Int. Cl.^{3} G07G *1/00;* **B23Q** *17/00*

U.S. Cl. 235—101 **5 Claims**

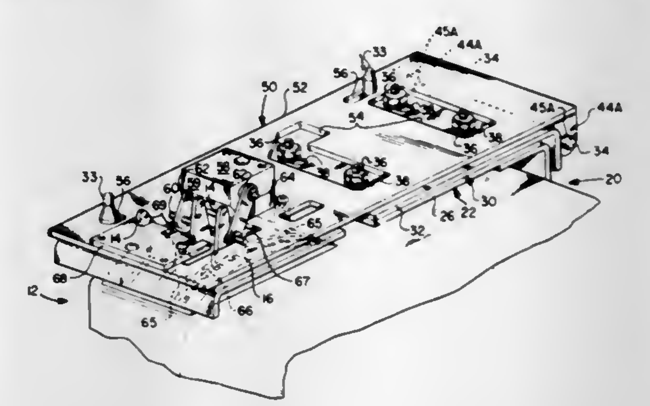

1. Apparatus for interconnecting a postage meter and means for operating the postage meter, wherein said postage meter includes a lever which is positionable in a plurality of postage value selecting positions, said meter operating means includes a support, and said meter operating means includes means removably attachable to said support for positioning said postage meter lever, said apparatus comprising:

a. means for adjusting the spatial relationship between said postage meter and said meter operating means, and

b. means for fixing the spatial relationship between said postage meter lever and said lever positioning means, said fixing means including lever extension means fixedly attachable to said postage meter lever, and said lever exten-

sion means including slidable means locatable in a predetermined position with respect to said adjusting means.

4,371,782
OPTICAL PATTERN TRACING SYSTEM WITH REMOTELY CONTROLLED KERF AND FORWARD OFFSETS
Frans Brouwer, 410 Greenwood Ave., Glencoe, Ill. 60022
Filed Dec. 31, 1979, Ser. No. 108,549
Int. Cl.^{3} G05B *1/00*
U.S. Cl. 250—202 **24 Claims**

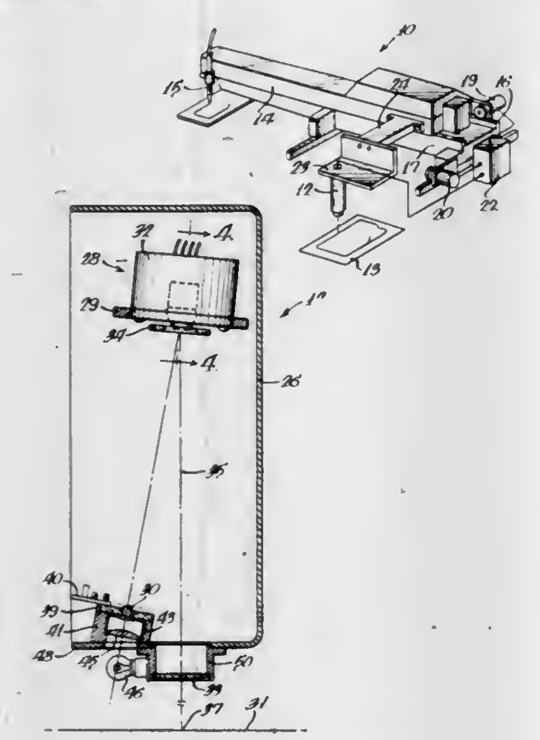

20. An optical pattern tracer, comprising; a frame mounted for movement along two coordinates, power operated means for moving the frame along the two coordinates, an optical scanning assembly for scanning the pattern and providing control signals for the power operated means, said scanning assembly including an optical deflector having pure nutating motion without rotation for projecting a scan spot in a circular path on the pattern.

4,371,783
MULTICHANNEL FIBER OPTIC LIGHT GUIDE FOR CAPSULE INSPECTION
William C. Grimmell, Lake Hiawatha, and Gilbert C. Kaetzel, Wayne, both of N.J., assignors to Hoffmann-La Roche Inc., Nutley, N.J.
Filed Nov. 3, 1980, Ser. No. 203,290
Int. Cl.^{3} G02B *5/14*
U.S. Cl. 250—227 **5 Claims**

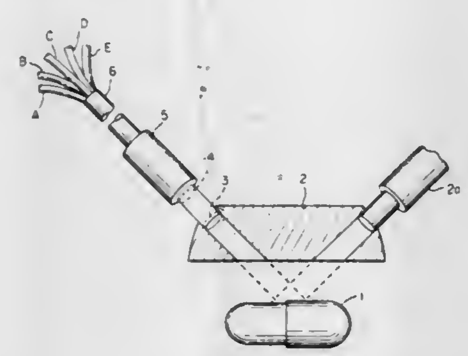

1. A fiber optic arrangement for detecting certain properties of a capsule by utilizing focussed light reflected from the capsule comprising:
(a) a fiber optic guide having a plurality of channels of optical fibers joined together at an end to form a common end and the other end of each channel being free, said common end being positioned to receive the focussed reflected light from the capsule, and the optical fibers of each channel being substantially evenly distributed over the common end;
(b) mask means covering the common end of the channels for masking a portion of the light reflected from the capsule and having a first aperature with a curved configuration located and dimensioned to permit only light reflected from a predetermined section of the capsule to pass to the channels;
(c) detecting means associated with the free end of the channels for obtaining a plurality of electrical signals from the light passing through channels and detecting the color of the capsule, the signals representing the response of the capsule to the light.

4,371,784
THIN FILM PLANE-POLARIZED INTENSITY PICKOFF
Aubrey Rodgers, Huntsville, Ala., assignor to The United States of America as represented by the Secretary of the Army, Washington, D.C.
Filed Oct. 30, 1980, Ser. No. 202,261
Int. Cl.^{3} G01C *19/28;* **G02B** *5/30, 27/28*
U.S. Cl. 250—231 GY **3 Claims**

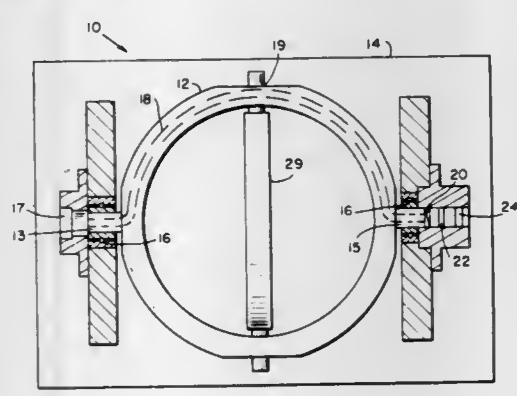

1. A thin film plane-polarized intensity pickoff assembly comprising:
a. a housing;
b. an outer stablized gimbal having a first pair of hollow shafts secured thereto and to said housing;
c. an inner gimbal having a second pair of shafts secured thereto and to said outer gimbal;
d. fiber optic means carried in the first of said hollow shafts, extending through said outer gimbal and into the second of said hollow shafts;
e. light emitting means mounted on said housing adjacent said first hollow shaft for directing unpolarized radiant energy through said fiber optic means;
f. polarizer means mounted on the end of the second of said hollow shafts for receiving said source of unpolarized radiant energy for polarization thereof;
g. analyzer means for receiving and directing said polarized energy from said polarizer whereby the intensity of said polarized energy directed through said analyzer means varies with the angle of rotation of said hollow shafts; and
h. detector means for receiving said polarized energy for said analyzer.

4,371,785
METHOD AND APPARATUS FOR DETECTION AND ANALYSIS OF FLUIDS
Norman E. Pedersen, Wilmington, Mass., assignor to Panametrics, Inc., Waltham, Mass.
Filed Aug. 14, 1980, Ser. No. 178,190
Int. Cl.^{3} G01N *21/26*
U.S. Cl. 250—343 **26 Claims**

1. A photometric analysis apparatus for analyzing a fluid medium having at least one sample component having a characteristic absorption wavelength of interest, comprising:
a beam source of electromagnetic radiation including radiation at least at said one characteristic wavelength and at a reference wavelength,
a fluid sample chamber having an optical path passing therethrough,
means for positioning said chamber in the path of said beam for passing said beam through said chamber along said optical path,
means for modulating said beam exiting said chamber for

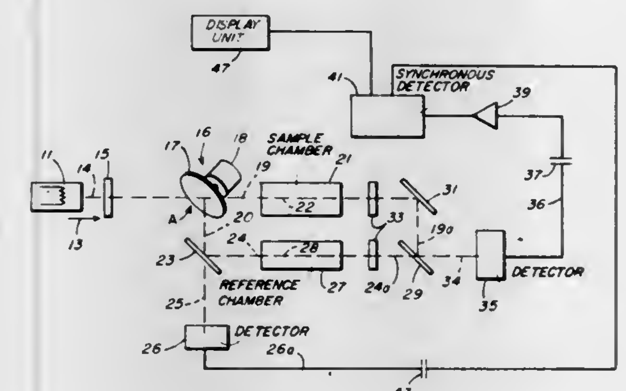

forming at least first and second time-varying component beams,
first filter means in the path of the first component beam for passing substantially only radiation of said characteristic wavelength,
second filter means in the path of the second component beam for passing radiation at at least said reference wavelength and not including said characteristic wavelength,
means for combining said first and second wavelength component beams exiting said respective filter means, and
means for measuring selected characteristics of said combined beam.

4,371,786
METHOD AND APPARATUS FOR DETECTING BUBBLES IN A LIQUID
Donald L. Kramer, Indian Harbor Springs, Fla., assignor to Miles Laboratories, Inc., Elkhart, Ind.
Filed Oct. 29, 1980, Ser. No. 201,736
Int. Cl.^{3} A61M *5/16*
U.S. Cl. 250—343 **28 Claims**

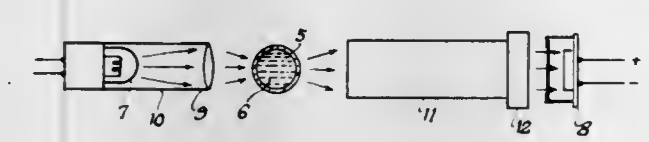

1. In the method of detecting the presence of bubbles in a liquid by sensing the effect of absorption by the liquid of radiation directed therethrough, the improvement which markedly increases the differential between the amount of radiation transmitted along a radiation path through the liquid when a bubble is not present in the radiation path and a greater amount of radiation transmitted through a bubble in the liquid present in the radiation path, comprising directing along said radiation path radiation having wavelength greater than 1.0 micrometer, and detecting the radiation having a wavelength greater than 1.0 micrometer which has traversed said radiation path.

4,371,787
ION-NITRIDING APPARATUS
Akio Tanaka, Ono; Mizuo Edamura, Kobe; Satoshi Furuitsu, Kakogawa, and Satoru Kunise, Akashi, all of Japan, assignors to Kawasaki Jukogyo Kabushiki Kaisha, Kobe, Japan
Continuation of Ser. No. 751,328, Dec. 16, 1976, abandoned. This application Jan. 18, 1979, Ser. No. 4,613
Claims priority, application Japan, Dec. 19, 1975, 50-158107; Jan. 14, 1976, 51-3471; Feb. 16, 1976, 51-16379; Mar. 1, 1976, 51-22382; Mar. 1, 1976, 51-22383; Mar. 19, 1976, 51-30381; Jun. 1, 1976, 51-64370; Jun. 1, 1976, 51-64371; Jun. 1, 1976, 51-71326
Int. Cl.^{3} C23C *11/14*
U.S. Cl. 422—186.06 **2 Claims**

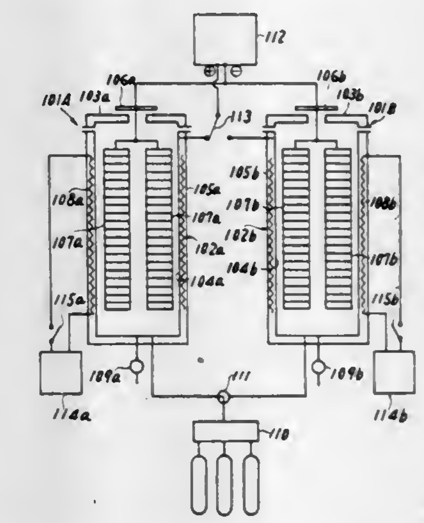

1. An ion-nitriding apparatus comprising:
(a) a plurality of separate vacuum reacting furnaces, each of which is separately provided with both glow discharge means and heating means;
(b) a power source device for heating, separately provided for each heating means of each vacuum reacting furnace, whereby each heating means is able to generate heat independently of each other heating means; and
(c) a DC source device for discharge which is provided in common to each glow discharge means of each vacuum reacting furnace, said single power source device working on a continuous basis to alternatively operate each glow discharge means to cause discharge means to generate glow discharge.

4,371,788
ENERGY DEVICE POWERED BY THE MOTION OF WATER BENEATH WAVES
E. Quimby Smith, Jr., Graeagle, Calif., assignor to Q Corporation, Troy, Mich.
Continuation-in-part of Ser. No. 56,186, Jul. 13, 1979, which is a continuation-in-part of Ser. No. 861,967, Dec. 19, 1977, Pat. No. 4,170,738. This application Jun. 26, 1980, Ser. No. 163,033
The portion of the term of this patent subsequent to Oct. 9, 1996, has been disclaimed.
Int. Cl.^{3} F03B *13/12*
U.S. Cl. 290—42 **29 Claims**

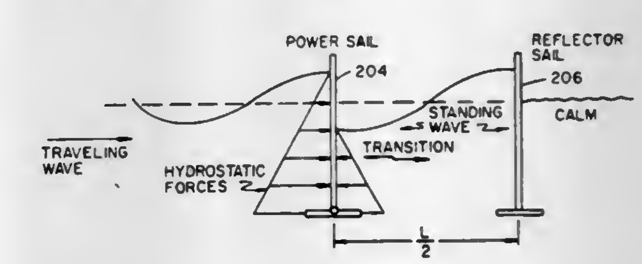

1. Apparatus for extracting energy from the motion of water beneath a traveling wave in a body of water comprising a power member capable of being moved by the water, means for supporting said power member in said body of water with

at least a substantial portion thereof beneath the surface of the waves in a manner such that said power member can be moved back and forth by the movement of water beneath the waves, means operatively connecting said power member to a conversion device to transfer the energy extracted by said power member to said conversion device, a secondary member, and means supporting said secondary member in said body of water with at least a substantial portion thereof beneath the surface of the waves at the leeward side of said power member and spaced therefrom a distance such that it receives energy transmitted through said power member and returns some of the received energy back to said power member to work in conjunction with said power member as a unit.

4,371,789

POWER CONTROL ARRANGEMENT

I-Heng Chen, Naperville, and Warren A. Liss, Aurora, both of Ill., assignors to Bell Telephone Laboratories, Incorporated, Murray Hill, N.J.

Filed Jun. 2, 1981, Ser. No. 269,573

Int. Cl.³ G05B *9/02;* **H02H** *7/00*

U.S. Cl. 307—38 **14 Claims**

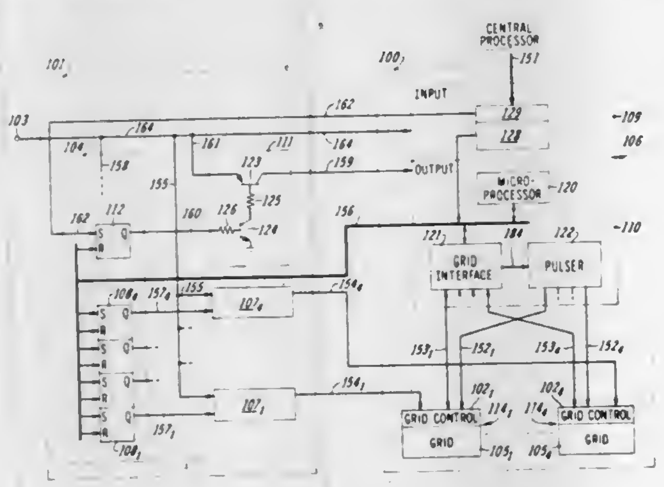

1. A power control arrangement for use in a processor-controlled switching system having a central processor for generating peripheral unit control signals, a plurality of peripheral units operative in response to said peripheral unit control signals to perform operations defined by said control signals, and a power source terminal;

said power control arrangement comprising:

a plurality of power switches operative to connect said power source terminal to said peripheral units; and

power control means responsive to said peripheral unit control signals for selectively operating said plurality of power switches to connect said power source terminal only to those of said peripheral units designated to be operated by said control signals.

4,371,790

FLUID MEASURING SYSTEM

John J. Manning; Robert E. Rosin, both of San Jose, Calif., and Ralph M. Richart, Tenafly, N.J., assignors to RMR Systems, Inc., Santa Clara, Calif.

Filed Sep. 19, 1980, Ser. No. 188,929

Int. Cl.³ H01H *35/18;* **G01F** *23/22*

U.S. Cl. 307—118 **2 Claims**

1. An apparatus for indicating the level of an electrically-conductive liquid, said apparatus comprising a carrier member, a reference contact attached to a reference position at substantially the lowermost part of said carrier member and connected to a reference potential, said carrier member being adapted to be placed in the liquid whose level is to be determined to an extent that at least said reference contact is below the surface of the liquid, a plurality of sensors attached to said carrier and positioned above said reference position of said reference contact, said sensors being vertically spaced on said carrier member and normally electrically insulated from one another and from said reference contact, the liquid into which said carrier member is placed being effective when the liquid extends between said reference position and the level of one or more of said sensors to effect electrical connection between said reference contact and said one or more of said sensors, thereby to operatively connect said one or more of said sensors to said first reference contact and thereby to said reference potential, a plurality of indicating means, and logic means interposed between said indicating means and said plurality of sensors and effective to selectively actuate at least the one of

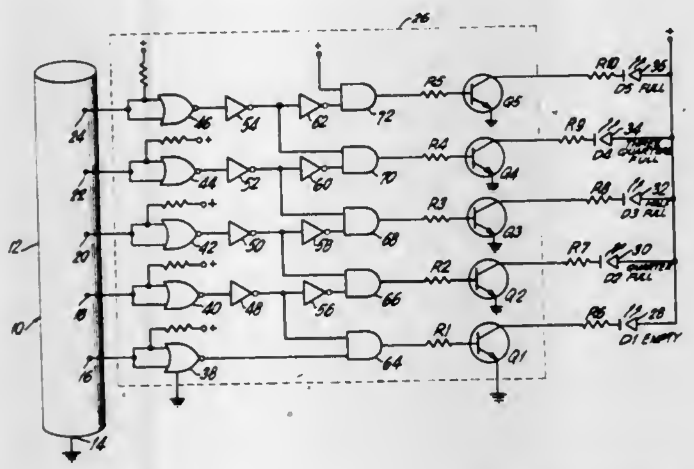

said indicating means which is operatively connected to the upper most of said plurality of sensors that is below the surface of the liquid, said logic means comprising a plurality of switching means respectively connected to said indicating means and effective when it receives a drive signal to cause the actuation of the corresponding one of said indicating means, and a plurality of logic gates operatively respectively interposed between said plurality of sensors and said switching means and effective to provide a drive signal to a selected one of said switching means corresponding to the uppermost one of said plurality of sensors below the liquid.

4,371,791

TIME DELAY SWITCH

Olivier Mercier, Ennetbaden, Switzerland, assignor to BBC Brown, Boveri & Company, Limited, Baden, Switzerland

Filed Jul. 6, 1981, Ser. No. 280,487

Claims priority, application Switzerland, Jul. 8, 1980, 5206/80

Int. Cl.³ H01H *7/00*

U.S. Cl. 307—141 **1 Claim**

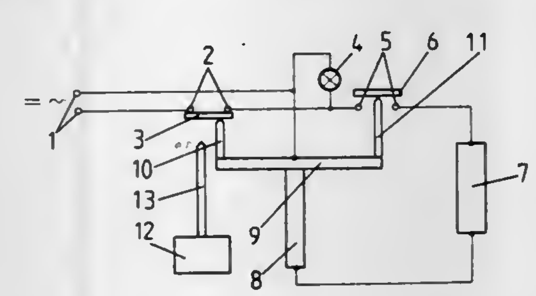

1. A time delay switch capable of connecting for a predetermined time period a consuming device to a power source via a first current path, comprising:

a first normally open circuit breaker including stationary and movable contacts adapted to be connected in series with said consuming device and said power source in said first current path;

an auxiliary normally closed circuit breaker having stationary and movable contacts connected in series with said first circuit breaker and said power source in a second current path;

a thermal element made of a memory alloy characterized by a two way temperature sensitive shape changing characteristic and having a predetermined thermal capacity;

a resistor electrically connected in series with said thermal element and thermally coupled thereto, said thermal element and said resistor connected in series with said first and second circuit breakers and said power source in said second current path, said thermal element having respective tripping pins mechanically coupled to the movable contacts of said first and second circuit breakers; and

a push button activator coupled to the movable contact of said first circuit breaker and having a tripping pin capable of being manually translated to make a temporary electrical connection between the stationary and movable contacts of said first circuit breaker;

whereby when said push button activator makes said temporary electrical connection between the stationary and movable contacts of said first circuit breaker, a current is generated in said first and second current paths producing a heating of said thermal element and a corresponding shape change thereof such that the tripping elements of said thermal element move to maintain the electrical connection of the movable and stationary contacts of the said first circuit breaker and disconnect the stationary and movable contacts of said second circuit breaker such that the current in said second current path is interrupted, whereupon heating of said thermal element ceases and said thermal element returns to its shape prior to heating thereof after a predetermined time period whereupon the first circuit breaker returns to its normally open state and the second circuit breaker returns to its normally closed state.

4,371,792

HIGH GAIN COMPOSITE TRANSISTOR

Robert C. Dobkin, Hillsborough, Calif., assignor to National Semiconductor Corporation, Santa Clara, Calif.

Filed Jul. 24, 1980, Ser. No. 171,778

Int. Cl.³ H03K *17/60, 3/26;* **H01L** *27/02*

U.S. Cl. 307—255 **11 Claims**

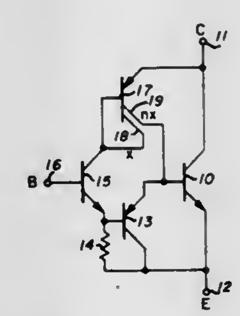

1. An integrated circuit for providing a composite transistor action, said composite performing as a single three terminal transistor that displays high gain, low leakage, and stable operation over a wide frequency band, said circuit comprising:

first, second, and third circuit terminals representing respectively the collector, emitter, and base of said composite transistor;

a first transistor of a first conductivity having its emitter-collector circuit coupled in series between said first and said second terminals and a base;

a second transistor of complementary conductivity having a collector returned to said second terminal, an emitter coupled to drive said base of said first transistor, and a base;

a third transistor of said first conductivity having an emitter coupled to drive said base of said second transistor, a base connected to said third terminal and a collector; and

a fourth transistor of said complementary conductivity having an emitter returned to said first terminal, a base coupled to be driven by said collector of said third transistor, and a collector coupled to drive said base of said first transistor.

4,371,793

DUAL-MODE CONTROL SIGNAL GENERATING APPARATUS

Mark B. Knight, Somerville, N.J., assignor to RCA Corporation, New York, N.Y.

Filed Apr. 24, 1981, Ser. No. 257,104

Int. Cl.³ H03K *3/023*

U.S. Cl. 307—260 **7 Claims**

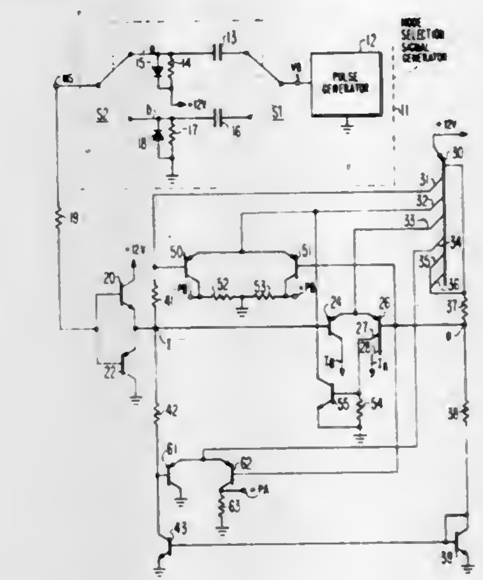

1. Dual-mode control signal generating apparatus for (1) supplying to a plurality of outputs a first array of control signals in response to delivery to an input terminal of an input pulse train accompanied by a DC component of a first magnitude, and (2) supplying to said outputs a different array of control signals in response to delivery to said input terminal of said input pulse train accompanied by a DC component of a second magnitude; said apparatus comprising:

a reference current path including a first resistor in series with a second resistor;

means for supplying a reference current to said reference current path;

first, second, third and fourth transistors, each having base, emitter and collector electrodes;

means for interconnecting the emitter electrodes of said first and second transistors;

a first control current path connected to a collector electrode of said first transistor;

a second control current path connected to a collector electrode of said second transistor;

means for supplying a first energizing current to said interconnected emitter electrodes of said first and second transistors;

means for (1) causing flow of a substantially unvarying control current in one of said control current paths to the exclusion of the other in the presence of input pulse train accompaniment by a DC component of said first magnitude, and for (2) causing flow of a substantially unvarying control current in said other of said control current paths to the exclusion of said one in the presence of input pulse train accompaniment by a DC component of said second magnitude; said flow causing means comprising means for rendering the potential at the base electrode of said first transistor responsive to the potential at said input terminal, and means for rendering the potential at the base electrode of said second transistor responsive to the potential at the junction of said first and second resistors;

means for interconnecting the emitter electrodes of said third and fourth transistors;

means for supplying a second energizing current to said interconnected emitter electrodes of said third and fourth transistors;

a load impedance coupled to a collector electrode of said fourth transistor; and

means for causing output pulse train development across said load impedance only in the presence of input pulse

train accompaniment by a DC component of said second magnitude; said output pulse train development causing means comprising:
means for rendering the potential at the base electrode of one of said third and fourth transistors responsive to the potential at the junction of said first and second resistors;
a third resistor;
current mirror means responsive to said reference current for causing flow of a translating current, proportional to said reference current, through said third resistor; and
means for connecting said third resistor between said input terminal and the base electrodes of the other of said third and fourth transistors.

4,371,794
MONOLITHIC INTEGRATED CIRCUIT
Wolfgang Gollinger, Gundelfingen, Fed. Rep. of Germany, assignor to ITT Industries, Inc., New York, N.Y.
Filed Oct. 2, 1980, Ser. No. 193,070
Int. Cl.³ H03K *5/13, 3/335*
U.S. Cl. 307—269 **5 Claims**

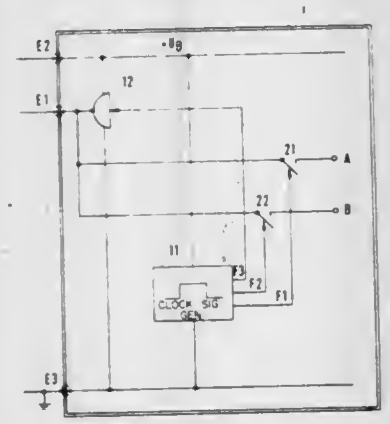

1. A circuit, comprising:
a clock signal generator with at least one outer terminal, to which may be applied one of several potentials selectable by way of outside connections, the outer terminal (E1) is applied optionally to one of four potentials of which the first one is that of the supply voltage source U_B, of which the second one is that of the zero point of the circuit, of which the third one is that of the outer terminal (E1) itself without any outside connections, and of which the fourth one is that of the output of a square-wave signal generator (4), the clock signal generator (11) produces at least three square-wave clock signals (F1, F2, F3) of equal frequency of which the first and second ones each have a pulse-interval ratio smaller than unity and which are phase-shifted with respect to one another by 180°, while the pulse duration (t3) of the third one is longer than that of the first one and overlaps it, the outer terminal (E1) is applied to the output of an inverter (12) to the input of which there is fed the third clock signal (F3) and, moreover, via a first electronic make contact (21) to the control input of which there is fed the first clock signal (F1) to a first circuit point (A) and, via a second electronic make contact (22) to the control input of which there is fed the second clock signal (F2) to a second circuit point (B), and the output resistance of the inverter (12), in the two switching states thereof is high with respect to the internal resistance of the square-wave signal generator (4).

4,371,795
DYNAMIC MOS-LOGIC INTEGRATED CIRCUIT COMPRISING A SEPARATE ARRANGEMENT OF COMBINATORY AND SEQUENTIAL LOGIC ELEMENTS
Cornelis Mulder; Leendert Nederlof; Cornelis Niessen; Rene M. G. Wijnhoven, all of Eindhoven, Netherlands, and Roelof H. W. Salters, Sunnyvale, Calif., assignors to U.S. Philips Corporation, New York, N.Y.
Filed Sep. 7, 1979, Ser. No. 73,571
Claims priority, application Netherlands, Sep. 15, 1978, 7809397
Int. Cl.³ H03K *19/08, 19/12*
U.S. Cl. 307—440 **6 Claims**

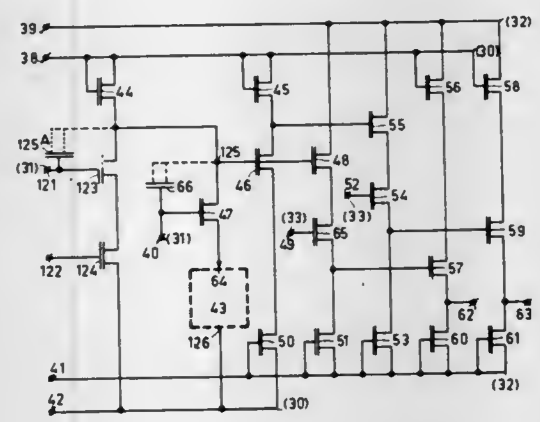

1. An integrated circuit in dynamic MOS technology, comprising:
clock input means for receiving repetitive clock cycle signals, each cycle having a succession of first, second and third clock phase signals; a plurality of single bit hold circuits (DFF), each having:
a first data input;
an input gate fed by said first data input and having first control means for being rendered transmitting by a first clock phase signal;
an intermediate gate fed by said input gate and having second control means for being rendered transmitting by a second clock phase signal next to said first clock phase signal;
at least a first output gate fed by said intermediate gate and having third control means for being rendered transmitting by a third clock phase signal next to said second clock phase signal and having a first data output;
a set of logic gates having second inputs for receiving a second plurality of binary signals as generated on said first data outputs and therefrom producing by combinatory logic means a third plurality of binary signals on second data outputs coupled to respective first data inputs while being enabled by said first clock phase signal in coincidence with said input gate of said single bit hold circuits; having a succession of first, second, third and fourth clock phase signals;
at least one of said single bit hold circuits having a second output gate fed by said intermediate gate and having fourth control means for being rendered transmitting by a fourth clock phase signal next to said third clock phase signal and having a third data output connected to a further one of said second input, wherein the signals on the first and third data outputs of a same single bit hold circuit are mutually inverse.

4,371,796
JOSEPHSON LOGIC GATE DEVICE
Susumu Takada, Musashi-Murayama, Japan, assignor to Agency of Industrial Science & Technology and Ministry of International Trade & Industry, both of Tokyo, Japan
Filed Aug. 27, 1980, Ser. No. 181,855
Claims priority, application Japan, Aug. 27, 1979, 54/108129
Int. Cl.³ H03K *19/195, 17/92*
U.S. Cl. 307—476 **4 Claims**

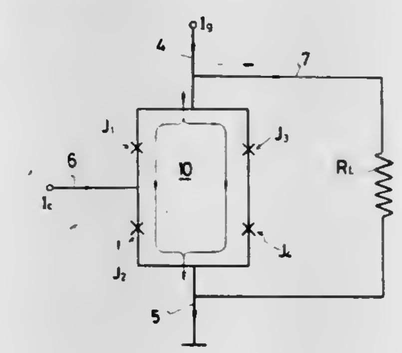

1. A Josephson logic gate device comprising;
four superconductor lines (1)
four insulating films (2) connecting said four superconductor lines with each other at their ends (E_1–E_8) to form four Josephson junctions (J_1–J_4), said four superconductor lines (1) and said four insulating films (2) together constituting a closed loop provided with said Josephson junctions (J_1–J_4),
a gate line (4) connected to a first one (1*a*) of said superconductor lines,
a control line (6) connected to a second (1*b*) or fourth one (1*d*) of said superconductor lines, one end (E_3, E_8) of each of said second and said fourth superconductor lines (1*b*, 1*d*) being connected via said insulating film to said first superconductor line (1*a*), and
a ground line (5) connected to a third one (1*c*) of said superconductor lines, both ends (E_5, E_6) of which are connected via said insulating film to the other ends (E_4, E_7) of said second and fourth superconductor lines (1*b*, 1*d*), whereby the device acts as a switching gate in which a gate current fed to said gate line is steered to a load connected to said gate line (4) and said ground line (5) by using the zero-voltage/voltage state-transition of said four Josephson junctions (J_1–J_4) when a control current is injected into said control line (6) as an input signal.

4,371,797
CIRCUIT FOR DECREASING THE EFFECT OF PARASITIC CAPACITANCES IN FIELD EFFECT TRANSISTORS USED IN COUPLING NETWORKS
Dieter Frank, Darmstadt-Eberstadt, Fed. Rep. of Germany, assignor to Robert Bosch GmbH, Stuttgart, Fed. Rep. of Germany
Filed Apr. 30, 1980, Ser. No. 145,318
Claims priority, application Fed. Rep. of Germany, May 4, 1979, 2917989
Int. Cl.³ H03K *17/16, 17/693;* **H04N** *5/21;* **H04Q** *3/52*
U.S. Cl. 307—577 **7 Claims**

1. In a network for selectively coupling each of a plurality of input lines (E1 . . . En) to a plurality of output lines (A1 . . . Am), said coupling network comprising a plurality of field effect transistors each having a source-drain circuit connected between one of said input lines and one of said output lines, a gate terminal and a bulk terminal, said source-drain circuit switching to the conductive state in response to a control signal applied at said gate terminal, thereby providing an output signal on the associated one of said output lines in response to an input signal on the associated one of said input lines, the said output signal being derived from the signal transmitted across the respective source-drain circuit of the FET from the input line to the output line when the said FET is activated by said gate control signal, the improvement comprising means (RV1 . . . RVm) connected to said bulk terminals and at least one of said output lines for applying a compensation signal to said bulk terminals of at least selected ones of said field effect

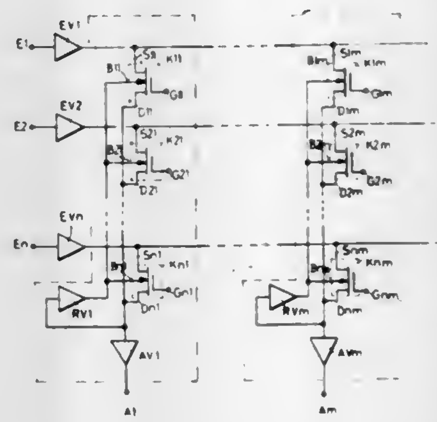

transistors, said compensation signal being derived from said output signal on said at least one output line, and being applied in a form compensating and substantially reducing the effect of parasitic capacitance between said source-drain circuit and said bulk terminals of said field effect transistors.

4,371,798
MAGNETIC CYLINDER
Takeshi Kuroda, 7-12, Higashishioya-cho, Kure-shi, Hiroshima-ken, Japan
Filed Mar. 18, 1980, Ser. No. 131,469
Claims priority, application Japan, Mar. 26, 1979, 54-36136; Jun. 30, 1979, 54-90443[U]
Int. Cl.³ H02K *7/06*
U.S. Cl. 310—80 **7 Claims**

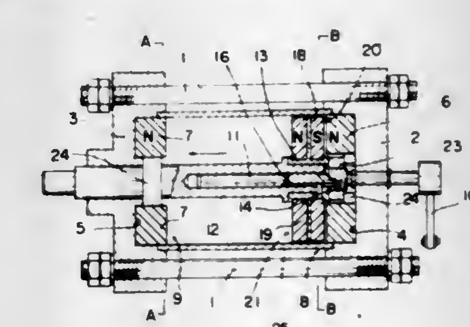

1. A piston assembly comprising:
a slidably mounted piston rod;
a first magnetic unit mounted to said piston rod so as to be axially movable therewith, said magnetic unit including a plurality of segments of alternating polarity in the direction of rotation about the axis of said piston rod;
means for rotationally moving said first magnetic unit with respect to the axis of said piston rod; and
a second fixedly mounted magnetic unit, said second magnetic unit opposing said first magnetic unit and including a plurality of segments of alternating polarity in the direction of rotation about the axis of said piston rod, said first and second magnetic units disposed such that they will attract or repel each other, thereby causing linear movement of said piston rod, when said first magnetic unit is rotated into a selected position.

4,371,799
PERMANENT MAGNET FIELD POLE FOR A DIRECT CURRENT DYNAMOELECTRIC MACHINE
Frank T. De Wolf, and Dan W. Kimberlin, both of Erie, Pa., assignors to General Electric Company, Schenectady, N.Y.
Division of Ser. No. 845,457, Oct. 25, 1977, Pat. No. 4,141,137. This application Feb. 9, 1979, Ser. No. 10,580
Int. Cl.[3] H02K *21/26*
U.S. Cl. 310—154 **6 Claims**

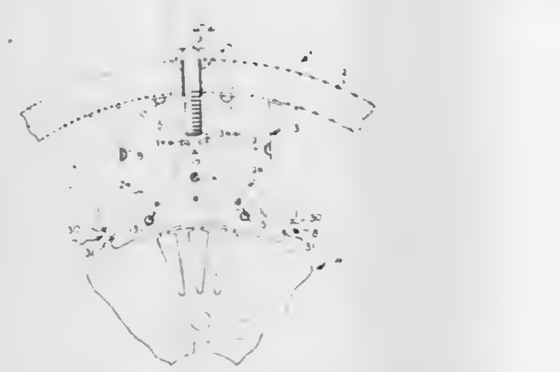

1. In a dynamoelectric machine comprising a flux conducting stator, a plurality of salient field poles mounted on said stator, and a rotor concentrically mounted between said poles for rotation relative thereto, the improvement wherein each of said field poles comprises a rigid laminated base member, a relatively more flexible laminated face member wherein the laminations are held together by, and are individually pivotable about, a plurality of rods extending through spaced apertures through the face member, and one or more rare earth magnet sub-assemblies mounted between the base member and the face member and secured between said members by mounting means.

4,371,800
VIBRATING LINEAR MOTOR FOR ELECTROMAGNETIC FEEDERS AND SIMILAR MACHINES
James E. Brander, Strathfield, Australia, assignor to International Combusion Australia Limited, Australia
Continuation of Ser. No. 950,988, Oct. 13, 1978, abandoned, which is a continuation-in-part of Ser. No. 736,319, Oct. 28, 1976. This application Jun. 17, 1981, Ser. No. 274,509
Claims priority, application Australia, Mar. 11, 1975, PC3816
Int. Cl.[3] H02K *33/00*
U.S. Cl. 310—15 **6 Claims**

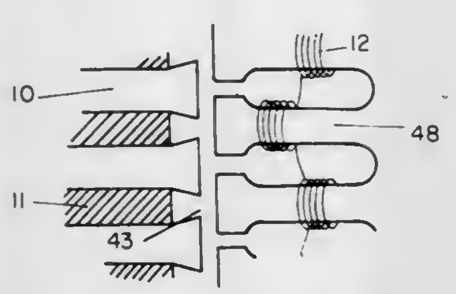

1. An electromagnetic vibratory motor comprising:
an armature having a plurality of magnetic poles spaced apart along the direction of action of the motor, said poles having flat pole faces generally parallel to said direction of action forming a plane and having gaps therebetween which are smaller than the width of the pole faces;
a spring means attached to said armature;
a stator having a plurality of magnetic poles spaced apart along the direction of action of said motor, the shapes of both said armature and said stator poles being substantially identical, each being symmetrical about an axis drawn through its face normal to said direction of action of said motor, the pole pitch of said stator poles being the same as that of said armature poles, said armature and said stator poles being closely adjacent relative to the distance between the axis of symmetry of adjacent ones of said armature and said stator poles with said stator poles arranged symmetrically about the centres of respective ones of said armature poles in the rest position wherein the centres of gaps between adjacent ones of said stator poles are located opposite the centres of respective ones of said armature poles;
said armature and stator pole arrangement being such that the respective gaps on either side of the motor between the plane of the armature pole faces and the plane of the opposed stator pole faces remain of substantially constant width during translation of the armature;
means to energize said stator poles; and
means to energize said armature poles.

4,371,801
METHOD AND APPARATUS FOR OUTPUT REGULATION OF MULTIPLE DISK PERMANENT MAGNET MACHINES
Eike Richter, Scotia, N.Y., assignor to General Electric Company, Schenectady, N.Y.
Continuation-in-part of Ser. No. 950,317, Oct. 11, 1978, abandoned. This application Jan. 12, 1981, Ser. No. 223,962
Int. Cl.[3] H02K *19/26*
U.S. Cl. 310—156 **15 Claims**

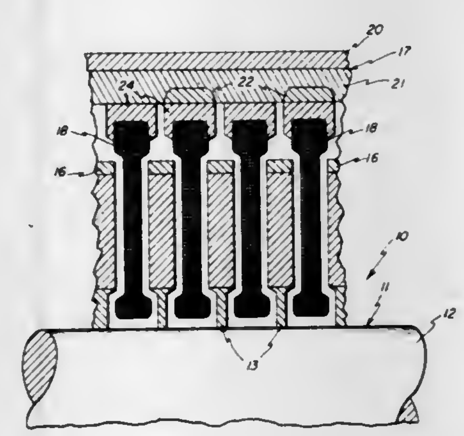

1. In a permanent magnet excited disk-type synchronous generator having a plurality of stator winding disks with distributed multiphase, multiturn windings thereon, and a plurality of rotor disks rotatable about an axis having permanent magnets mounted thereon and oriented in such a fashion that the magnetic flux is directed axially through the mahcine, the improvement comprising:
means for controllably rotating alternate ones of said stator winding disks about said axis with respect to adjacent stationary stator winding disks to place distributed windings in the rotated stator disks in a preselected angular orientation relative to the distributed windings in said stationary stator winding disks to control the field flux density of the generator to control the generator output voltage.

4,371,802
HALF-PITCH CAPACITOR INDUCTION MOTOR
Wayne J. Morrill, 3448 S. Washington Rd., Fort Wayne, Ind. 46804
Continuation-in-part of Ser. No. 155,104, Jun. 12, 1980, abandoned, which is a continuation of Ser. No. 934,902, Aug. 18, 1978, abandoned. This application Jun. 8, 1981, Ser. No. 271,667
Int. Cl.[3] H02K *17/00*
U.S. Cl. 310—166 **12 Claims**

1. In a single phase, permanent split capacitor induction motor including a stator core member having a plurality of substantially equally angularly spaced, radially inwardly extending teeth respectively defining winding slots therebetween, said teeth having inner ends defining a bore, a rotor member in said bore having a peripheral surface defining air gaps with said inner end of said teeth and having generally axially extending slots formed therein, a squirrel cage winding in said rotor member slots extending between the ends of said rotor member, a main field winding on said stator core member, said main winding forming a predetermined even number of magnetic poles, an auxiliary field winding on said stator core member mechanically angularly displaced from said main field winding and forming the same number of magnetic poles, means for coupling said windings for energization by a single phase source of alternating current, and a phase-displacing capacitor coupled in circuit with one of said field windings thereby providing a two-phase motor: the improvement

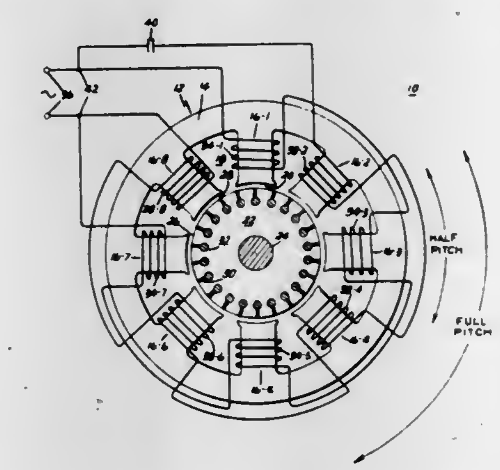

wherein said inner ends of said teeth have equal angular extent and said teeth are equal in number to twice the number of said poles, said main field winding comprising a plurality of coils equal in number to the number of said poles, said main field winding coils respectively embracing alternate consecutive ones of said teeth, said auxiliary field winding comprising a plurality of coils equal in number to the number of said poles, said auxiliary field winding coils respectively embracing consecutive alternate teeth respectively intermediate said first-named alternate teeth, there being one coil only on each said tooth thereby providing a half-pitch winding for said motor, said main and auxiliary field windings having substantially equal ampere turns and substantially equal pitch thereby providing a balanced two-phase winding.

4,371,803
COMMUTATOR BRUSH HOLDER QUADRATURE SPRING
Arnold Schindel, Fairlawn, and John A. Caspar, Verona, both of N.J., assignors to The Singer Company, Little Falls, N.J.
Filed Sep. 29, 1980, Ser. No. 191,896
Int. Cl.[3] H02K *13/10*
U.S. Cl. 310—242 **7 Claims**

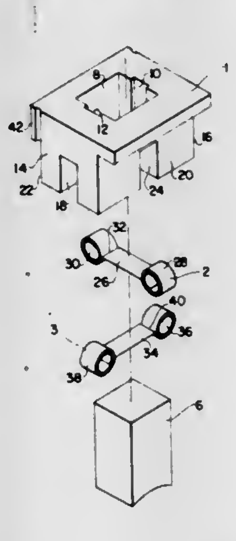

1. A motor commutator brush holder assembly comprising:
means for retaining a single brush therein;
at least first and second biasing means mounted in the brush retaining means and disposed in right angled overlying relation to each other, the biasing means contacting a brush end opposite the end adapted for contacting a commutator,
thereby urging the brush into full contact with the commutator during motor operation.

4,371,804
PIEZOELECTRIC KNOCK SENSOR
Yuchi P. Peng, Noblesville; Gerald O. Huntzinger, Anderson, and Melvin H. Hallmann, Middletown, all of Ind., assignors to General Motors Corporation, Detroit, Mich.
Filed Jul. 31, 1981, Ser. No. 288,910
Int. Cl.[3] H01L *41/10*
U.S. Cl. 310—321 **5 Claims**

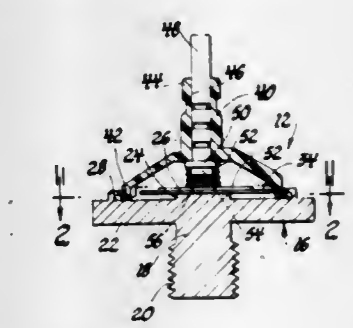

1. A broadly tuned knock sensor for an internal combustion engine subject to knock-induced vibrations within an engine determined frequency band, the sensor comprising, in combination:
mounting means defining a peripherally bounded surface having an axis, said surface, with the mounting means affixed to the engine, partaking of the knock induced vibrations; and
a piezoelectric element affixed to the surface, the element comprising a resilient vibratable portion extending radially outward from the surface by different distances when measured in two non-parallel radial directions in the plane of the surface so that the element exhibits resonant vibrations in a plurality of modes having resonant frequencies relatively closely spaced within the engine determined frequency band to substantially span said band, the element further comprising piezoelectric voltage generating means effective to generate an electrical voltage signal representation of said vibrations.

4,371,805
ULTRASONIC TRANSDUCER ARRANGEMENT AND METHOD FOR FABRICATING SAME
Heinrich Diepers, Höchstadt, and Bertram Sachs, Erlangen-Büchenbach, both of Fed. Rep. of Germany, assignors to Siemens Aktiengesellschaft, Munich, Fed. Rep. of Germany
Filed Jul. 10, 1980, Ser. No. 168,243
Claims priority, application Fed. Rep. of Germany, Jul. 20, 1979, 2929541
Int. Cl.[3] H04R *17/06;* **G01S** *15/00*
U.S. Cl. 310—334 **5 Claims**

1. In a ultrasonic transducer arrangement with a plurality of ultrasonic oscillators, each formed by a plurality of transducer elements which are mechanically separated from each other by fine division and are electrically controlled together, the improvement comprising:
a. the ultrasonic oscillators each including a matrix of column-like transducer elements which are arranged in columns one behind the other and in rows side by side;
b. the oscillators arranged in columns and rows;
c. a common electrical connecting lead connected to one end face of all transducer elements, the other end face of the transducer elements of each individual ultrasonic oscillator provided with a common electrical connection

which is connected to a connecting lead, one lead thereby being provided for each individual ultrasonic oscillator; and

d. said common electrical connection for each individual oscillator comprising a metal coating on a plastic covering which covers the free end faces of the transducer ele-

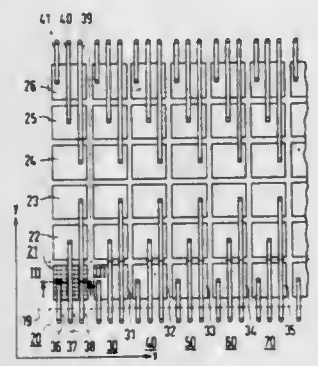

ments, one of said metal coatings formed in the area of the matrix of each individual ultrasonic oscillator, said covering having an opening for each oscillator, and each connecting lead comprising a conductor run on top of said plastic cover and extending through the opening for an associated oscillator into contact with said metal coating.

4,371,806

LUMINESCENT SCREEN WITH GRID STRUCTURE FOR X-RAY IMAGE INTENSIFIER

Werner Bintig, Erlangen, and Hermann Christgau, Fuerth, both of Fed. Rep. of Germany, assignors to Siemens Aktiengesellschaft, Berlin & Munich, Fed. Rep. of Germany

Filed Jul. 18, 1980, Ser. No. 170,091

Claims priority, application Fed. Rep. of Germany, Jul. 23, 1979, 2229745

Int. Cl.³ H01J *40/00;* **G01T** *1/20*

U.S. Cl. 313—101 **8 Claims**

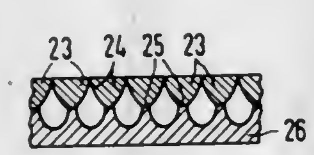

1. In an X-ray image intensifier,
a luminescent input screen arranged for receiving an X-ray image, and
utilization means coupled with said luminescent input screen for producing an intensified image in accordance with the X-ray energy absorbed by the input screen,
said luminescent input screen comprising an X-ray permeable carrier for transmitting an X-ray image from a first side thereof to a second side thereof, and having a grid structure at the second side thereof, and
a luminescent layer vacuum deposited onto the grid structure to exhibit a grid pattern and having a thickness dimension in the direction of the incident X-ray image for absorbing X-ray energy after transmission through the carrier,
characterized in that
said grid structure comprises point regions arranged in a grid configuration with interstices surrounding each of the point regions,
said interstices being etched into the material of said carrier, and said luminescent layer being vacuum deposited onto the point regions so as to form columns extending from the respective point regions a distance representing the thickness dimension of the luminescent layer.

4,371,807

INCANDESCENT LAMP WITH MECHANICALLY ATTACHED BASE

Frizt Eckhardt, Herbrechtingen-Bolheim, Fed. Rep. of Germany, assignor to Patent-Treuhand-Gesellschaft fur Elektrische Glühlampen mbH, Munich, Fed. Rep. of Germany

Filed Sep. 2, 1980, Ser. No. 183,349

Claims priority, application Fed. Rep. of Germany, Sep. 21, 1979, 2938189

Int. Cl.³ H01J *5/48, 5/50.*

U.S. Cl. 313—318 **4 Claims**

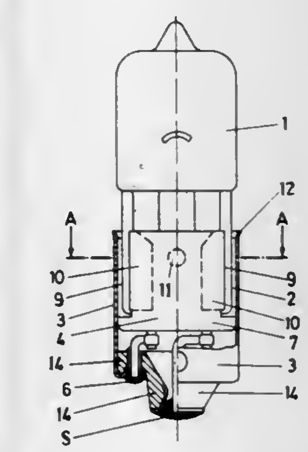

1. Incandescent lamp having a lamp bulb (1) and a press seal (2) joined to the lamp bulb;
a tubular base shell (3) of essentially circular cross section;
and means for securing the lamp bulb in the base shell comprising
a sleeve-like insert (4) snugly matching the inner diameter of the base shell (3) said insert including
an annular bottom (7) fitted within the base shell;
the sleeve-like insert being diametrically severed to form diametrically opposite sleeve portions defining upstanding flaps (9) having part-cylindrical portions extending along the side walls of the base shell, the end portions of said upstanding flaps being bent inwardly of the sleeve-like insert, to form inwardly facing wings (10),
said wings resiliently abutting and being pressed against the press seal;
and an interlocking projection and recess means formed in one of the flap (9) and in the base shell to lock said sleeve-like insert (4) and said base shell (3) together and to prevent rotation of the sleeve like insert relative to the base shell.

4,371,808

ONE-GUN TWO-BEAM CATHODE RAY TUBE

Tadao Urano, Hachioji, and Isamu Kaneko, Sagamihara, both of Japan, assignors to Iwatsu Electric Co., Ltd., Tokyo, Japan

Filed Nov. 24, 1980, Ser. No. 209,484

Claims priority, application Japan, Dec. 7, 1979, 54-159008

Int. Cl.³ H01J *29/50*

U.S. Cl. 313—411 **5 Claims**

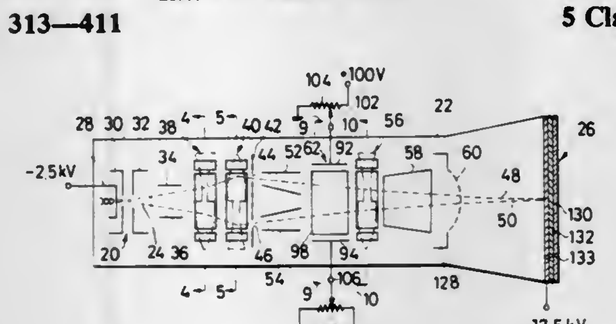

1. A one-gun two-beam cathode ray tube comprising:
(a) an envelope having a target screen;

(b) an electron gun for producing an electron beam directed toward the target screen;
(c) a first quadrupolar electron lens disposed along the path of the beam for diverging the beam in a first direction and for converging the beam in a second direction, the first and the second directions being at right angles with each other;
(d) a second quadrupolar electron lens disposed along the path of the beam from the first electron lens for converging the beam in the first direction and for diverging the beam in the second direction;
(e) beam separator means disposed across the path of the beam from the second electron lens and defining a pair of apertures equidistantly spaced from, and aligned in the first direction with, the geometrical center of the cross section of the incident beam, whereby two separate fractions of the incident beam are admitted through the apertures to provide first and second display beams of smaller cross sectional size;
(f) a first pair of deflection plates for deflecting the first display beam from the beam separator means in the first direction;
(g) a second pair of deflection plates for deflecting the second display beam from the beam separator means in the first direction;
(h) focus corrector means disposed along the paths of the first and the second display beams from the first and the second pairs of deflection plates, the focus corrector means comprising first and second opposed pairs of electrodes which are arranged in generally boxlike configuration and which are separated from one another, the first opposed pair of electrodes being spaced from each other in the first direction and so positioned that the first and the second display beams pass the opposite sides of the midpoint between the first pair of electrodes, the second opposed pair of electrodes being spaced from each other in the second direction to an extent necessary for the passage of each display beam, the first pair of electrodes being set at a potential higher than the potential of the second pair of electrodes, whereby the first and the second display beams are diverged in the first direction to a greater extent as the display beams pass closer to the respective electrodes of the first pair;
(i) a third quadrupolar electron lens for diverging the first and the second display beams from the focus corrector means in the first direction and for converging the first and the second display beams in the second direction; and
(j) a third pair of deflection plates for deflecting the first and the second display beams from the third electron lens in the second direction.

4,371,809

INTEGRAL-SHADOW-GRID CONTROLLED-POROSITY DISPENSER CATHODE

Richard E. Thomas, Riverdale, Md.; George A. Haas, Alexandria, Va., and Richard F. Greene, Bethesda, Md., assignors to The United States of America as represented by the Secretary of the Navy, Washington, D.C.

Filed Jun. 19, 1980, Ser. No. 161,183

The portion of the term of this patent subsequent to Mar. 3, 1998, has been disclaimed.

Int. Cl.³ H01J *29/46, 19/42*

U.S. Cl. 313—449 **5 Claims**

1. In a controlled-porosity-dispenser cathode of the type having a foil with a plurality of holes placed on the surface of a reservoir of electron-emitting material so that electron-emitting material is dispensed through the holes to the electron-emitting surface of the foil over a small area surrounding the holes and electrons are emitted from the holes and said small area surrounding the holes, and having a control grid spaced from the foil to control the emission of electrons, the improvement comprising:
an integral shadow grid formed upon the surface of the foil, the grid configuration being such that no holes in the foil are covered by the shadow grid and such that the control grid will be in substantially exact alignment with the

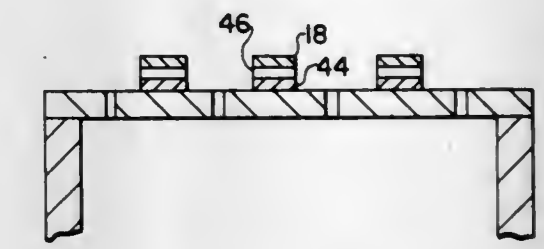

shadow grid, the shadow grid material being of a type which does not emit electrons at the operating temperature of the cathode.

4,371,810

PLANT GROWTH TYPE FLUORESCENT LAMP

Richard Corth, Nutley, N.J., assignor to Westinghouse Electric Corp., Pittsburgh, Pa.

Filed May 5, 1980, Ser. No. 146,888

Int. Cl.³ H01J *1/62, 63/04*

U.S. Cl. 313—487 **5 Claims**

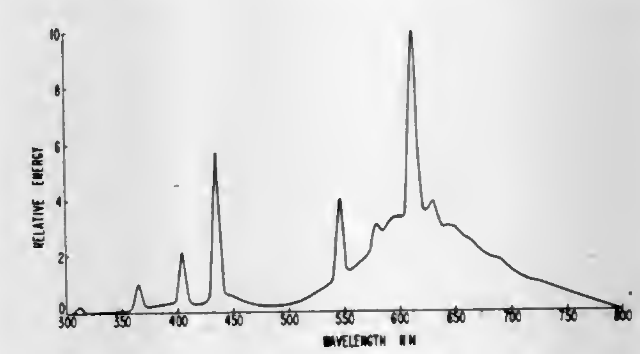

1. A luminescent discharge lamp to efficiently stimulate balanced plant growth, said lamp comprising an elongated light-transmitting envelope, phosphor means as the primary light-generating media coated on the interior surface of said envelope, and means for producing a low-pressure mercury discharge within said envelope to energize said phosphor means to a light-generating condition, said phosphor means when energized exhibiting a predetermined emission spectrum, and the combined emissions of said phoshor means and the visible emissions from said discharge which pass through said envelope having a spectral energy distribution such that the emission energies are principally confined to the 400–500 nm, 590–640 nm, 640–690 nm, and 690–800 nm bands and within these bands are at least within about 15% of being within the proportions of 1:2.6:1.3:1.2 which can also be expressed as in the following table:

Wavelengths	Ratio	Equivalent Percentages	Plus or Minus 15%
400–500 nm	1	16.4	13.9 to 18.9%
590–640 nm	2.6	42.6	36.2 to 50%
640–690 nm	1.3	21.3	18.1 to 24.5%
690–800 nm	1.2	19.7	16.7 to 22.7%
	6.1	100.0	

4,371,811
ELECTRONIC FLASH GUN STRUCTURE
Udo M. Geissler, Munich, Fed. Rep. of Germany, assignor to Patent-Treuhand-Gesellschaft fuer elektrische Glühlampen mbH, Munich, Fed. Rep. of Germany
Filed Feb. 2, 1981, Ser. No. 230,904
Claims priority, application Fed. Rep. of Germany, Feb. 11, 1980, 8003592[U]
Int. Cl.³ H05B *41/32*
U.S. Cl. 315—241 P 2 Claims

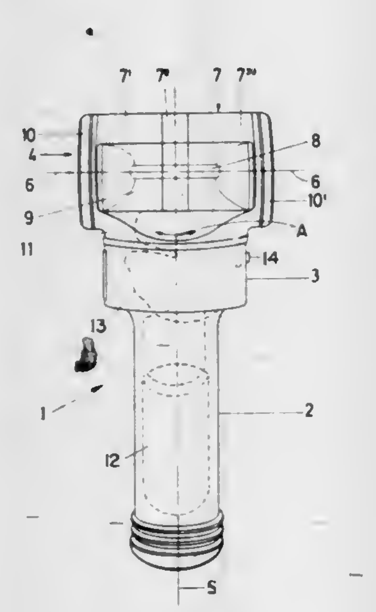

1. Electronic flash gun structure having an essentially linear flash tube (8);
a reflector (7) having sectional portions (7′,7″, 7‴) of which at least some are rotatable about an axis coincident with the central axis (6) of the flash tube;
a cylindrical housing (4) surrounding and retaining in position said flash tube (8) and said reflector (7), and formed with a transparent window portion (9) for transmission of light flashes from the tube;
and a support and apparatus chamber structure supporting said cylindrical housing and retaining electrical apparatus components for operation of the flash tube (8),
wherein said support and apparatus chamber structure comprises
a tube (2) closed at one end and defining a tube axis (5);
a flange-like cylindrical head portion (3) formed at the other end defining a support platform, and extending transversely to the axis (5) of the tube;
and said cylindrical housing (4) comprises
an attachment flange (11) defining an attachment plane positioned parallel to said central axis (6) and perpendicular to said tube axis (5), integral with said housing (4) and of cylindrical shape which matches and fits on the cylindrical head portion (3) of said tube (2);
said flange-like head portion (3) and the attachment flange (11) being rotatably joined to place the support platform and the attachment plane in parallel position and relatively rotatable about said axis (5) of the tube;
and wherein the central axis (6) of the flash tube, about which some of the sectional reflector portions are rotatable, and the tube axis (5) of the tube (2) have a common intersection to position the cylindrical housing (4) symmetrical with respect to the tube axis (5) of the tube.

4,371,812
LIGHT REGULATION SYSTEM
Don F. Widmayer, Bethesda, Md., assignor to Controlled Environment Systems, Inc., Rockville, Md.
Continuation-in-part of Ser. No. 27,740, Apr. 6, 1979, Pat. No. 4,234,820, and a continuation-in-part of Ser. No. 945,842, Sep. 26, 1978, abandoned. This application Jun. 22, 1979, Ser. No. 51,136
Int. Cl.³ H05B *41/392*
U.S. Cl. 315—291 9 Claims

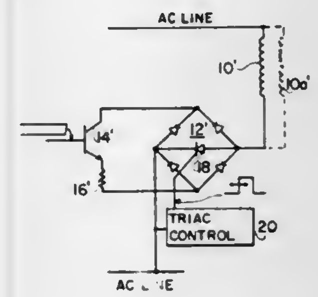

1. A light regulating system comprising:
at least one gas discharge lamp operating in the arc discharge region thereof,
a ballast connected from an AC supply line to said at least one lamp, and
a transistor control unit for controlling the current flow through said ballast, said transistor control unit including a control transistor and control means for controlling said transistor so as to provide operation of said transistor in the linear region thereof such that the waveform of the current supplied to said ballast during each half cycle comprises a first, low amplitude component corresponding to the minimum arc current for said at least one lamp and for additionally providing that said waveform of said current includes a second, variable duration component corresponding to maximum arc current, the duration of the second current component being a function of the controlled lighting in the area in which said at least one lamp is located.

4,371,813
CIRCUIT ARRANGEMENT FOR MOVING A MARKER OVER THE PICTURE SCREEN
Jürgen Dollheimer, and Klaus Knoll, both of Karlsruhe, Fed. Rep. of Germany, assignors to Siemens Aktiengesellschaft, Munich, Fed. Rep. of Germany
Filed Jul. 29, 1980, Ser. No. 173,361
Claims priority, application Fed. Rep. of Germany, Aug. 10, 1979, 2932564
Int. Cl.³ H01J *29/70*
U.S. Cl. 315—377 13 Claims

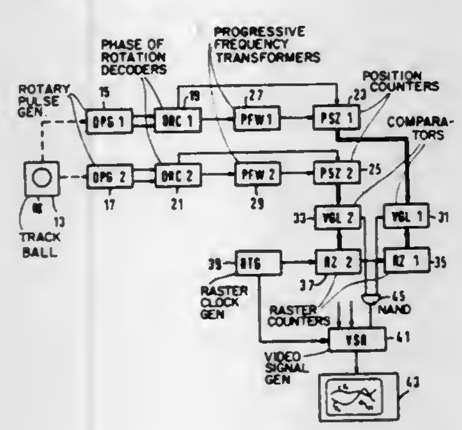

1. In a circuit arrangement for moving a marker over the picture screen of a display device including:
(a) a positioning transmitter;
(b) a pulse generator mechanically coupled to said positioning transmitter such that, upon actuation of said positioning transmitter pulses of switchable frequency are generated;
(c) a position counter for each coordinate in which the marker is moveable, the stored value of which corresponds to the position of the marker on the picture screen and the counting direction of which is controllable according to the desired displacement direction on the coordinate, coupled to receive pulses from said position transmitter, the improvement comprising:
(d) the pulse generator being a rotary pulse generator, one being provided for each coordinate and mechanically coupled to the positioning transmitter, said rotary pulse generator providing output pulses; and
(e) a progressive frequency transformer for each coordinate which delivers a number of output pulses for each input pulse, said number increasing with the frequency of the input pulses, said progressive frequency transformer having the output pulses of an associated rotary pulse generator as an input and providing its output to the position counter for that coordinate.

4,371,814
INFRARED TRANSMITTER AND CONTROL CIRCUIT
James R. Hannas, Thiensville, Wis., assignor to Silent Running Corporation, Clearwater, Fla.
Filed Sep. 9, 1981, Ser. No. 300,498
Int. Cl.³ H04R *7/02*
U.S. Cl. 318—16 7 Claims

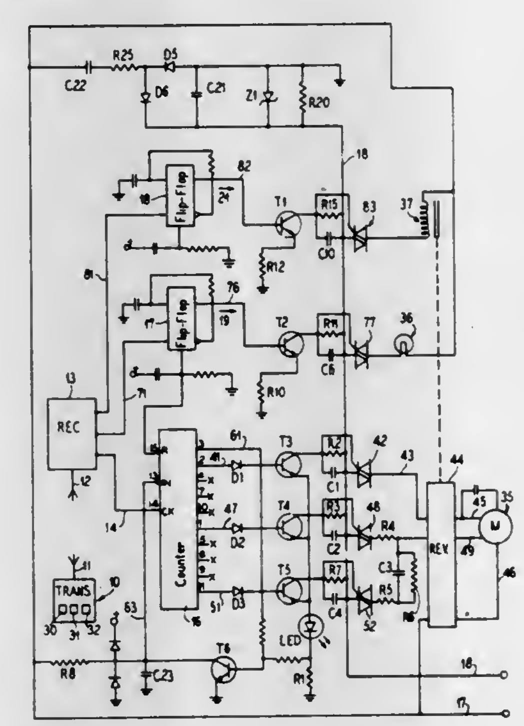

1. An infrared control system for a ceiling fan motor or other load comprising, an infrared transmitter with keying switches for transmitting directional infrared energy, an infrared receiver and decoder for receiving and decoding the output of said transmitter, a counter connected to receive an output of said receiver and decoder, a first transistor connected between a first output of said counter and a second input of said counter, a second transistor connected to a second output of said counter, a first TRIAC with its gate connected to an output of said second transistor and supplying an output to a first input lead of said fan motor, a third transistor connected to a third output of said counter, and a second TRIAC with its gate connected to an output of said third transistor and supplying an output to a second input lead of said fan motor.

4,371,815
WATERBED VIBRATOR
Johnny O. Jones, Jr., No. 1 Cross Creek, Irvine, Calif. 92714, and Charles C. White, Jr., 8952 Sailport Dr., Huntington Beach, Calif. 92646
Division of Ser. No. 800,588, May 25, 1977. This application Mar. 31, 1980, Ser. No. 136,176
Int. Cl.³ H02K *33/00*
U.S. Cl. 318—114 2 Claims

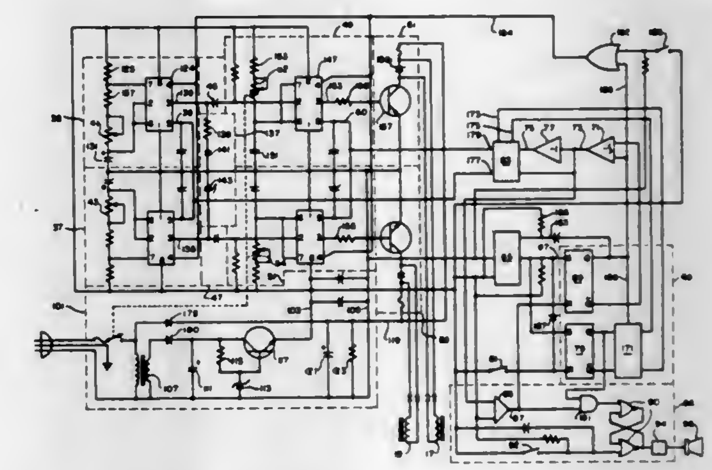

1. A vibrator for furniture, comprising.
a pair of transducers for producing mechanical vibration, said transducers mounted at spaced locations on said furniture;
means for producing an electrical driving signal for driving said pair of transducers at different vibration frequencies; and
signal means responsive to said driving signal producing means for indicating the difference frequency between said different vibration frequencies, said signal means comprising a light connected to said driving signal producing means and pulsating at said difference frequency.

4,371,816
CONTROL CIRCUIT FOR AN ULTRASONIC DENTAL SCALER
Alfred Wieser, Usingerstrasse 33, 6391 Usingen 2, Fed. Rep. of Germany
Filed Dec. 27, 1976, Ser. No. 754,886
Claims priority, application Fed. Rep. of Germany, Dec. 30, 1975, 2559198; Jan. 12, 1976, 2600877
Int. Cl.³ H01V *9/00*
U.S. Cl. 318—116 6 Claims

1. In a control circuit for an ultrasonic dental scaler including: a work tool; a transducer connected to said work tool for imparting vibratory motion thereto and forming a vibratory system therewith having a resonant frequency, said resonant frequency varying in response to variation of the contact pressure of said work tool against a tooth; an oscillator for driving said transducer; and said control circuit connected to said transducer and said oscillator for continuously readjusting the frequency of said oscillator to substantially the instantaneous resonant frequency of said vibrating system to thereby maintain substantially constant power output from said transducer, the improvement comprising:
(a) sensing means connected to said control circuit for sensing a measured value indicative of the contact pressure of said work tool against said tooth; and
(b) said sensing means being operative to reduce the output

power of said transducer when a selected maximum contact pressure of said work tool against said tooth is

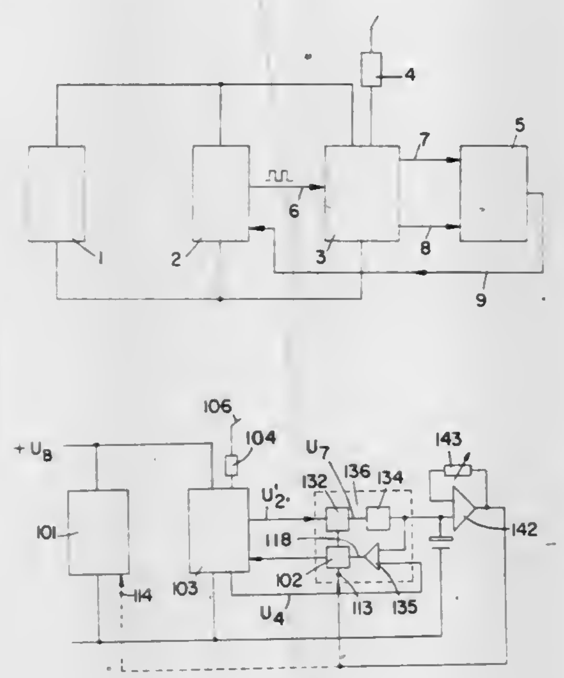

exceeded by effecting in the frequency of said oscillator a change from said instantaneous resonant frequency.

4,371,817

BRUSHLESS, PERMANENT MAGNET D-C PULSE CURRENT CONTROLLED, ESSENTIALLY UNIFORM TORQUE DYNAMO ELECTRIC MACHINE, PARTICULARLY MOTOR

Rolf Müller, St. Georgen, Fed. Rep. of Germany, assignor to Papst-Motoren KG, St. Georgen, Fed. Rep. of Germany

Continuation of Ser. No. 127,641, Mar. 6, 1980, abandoned, which is a division of Ser. No. 919,702, Jun. 27, 1978, Pat. No. 4,211,963. This application Dec. 3, 1980, Ser. No. 212,502

Claims priority, application Fed. Rep. of Germany, Jul. 4, 1977, 2730142

The portion of the term of this patent subsequent to Jul. 8, 1999, has been disclaimed.

Int. Cl.³ H02P *7/36*

U.S. Cl. 318—254 35 Claims

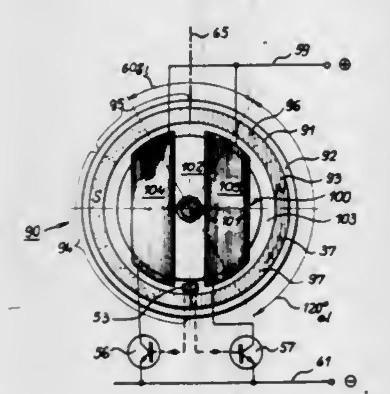

1. Brushless d-c motor comprising
a stator support;
a permanent magnet rotor having first and second essentially annular magnetic regions,
wherein the first region defines n poles of alternating polarity, and the second region defines 2n poles of alternating polarity,
wherein n is an even number;
magnetically-actuable rotor position sensing means (**53**) supported on the stator support and arranged to be magnetically actuated by the first magnetic region to provide, as a consequence of said actuation, rotor position information, including information relating to the position of one of said magnetic regions of the rotor to the sensing means;
stator pole means located on said stator support and positioned for electromagnetic coupling and interaction with the rotor, including two winding means,
wherein the stator pole means extends over at least a part of the first and second magnetic regions of the rotor and has an angular extent, in the direction of rotation, over both the first and second regions of approximately two-thirds, or integral multiples thereof, of one pole pitch of the first magnetic region;
and controlled switching means, selectively connecting a selected one of said winding means to a source of electrical power in dependence on said rotor position information to provide, in operation, controlled current flow through the selected one of the windings for effecting electromagnetic interaction with the magnetic regions of the rotor.

4,371,818

SPINDLE MOTOR CONTROL SYSTEM

Martyn A. Lewis, Pacific Palisades, Calif., assignor to Minnesota Mining and Manufacturing Company, St. Paul, Minn.

Filed Oct. 15, 1980, Ser. No. 197,185

Int. Cl.³ H02P *1/02*

U.S. Cl. 318—313 29 Claims

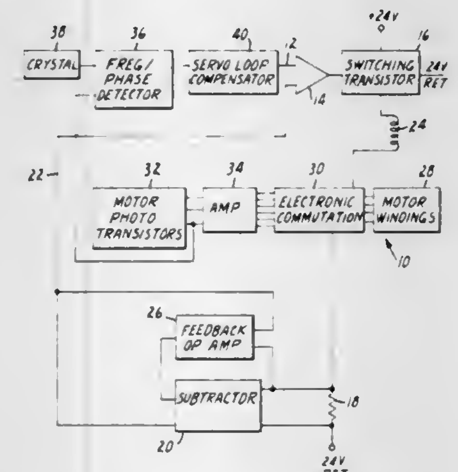

1. A motor control system for controlling an electric motor of the type having a rotor and a plurality of windings, having electronic commutation for said plurality of windings, and having a linear speed control feedback loop for said windings utilizing a velocity feedback sensor comprising:
a current sensor coupled to said plurality of said windings for producing a current feedback signal indicative of the amount of the current flowing through said electric motor;
a comparator coupled in said linear speed control feedback loop and coupled to said current feedback signal of said current sensor for providing a comparison output responsive to the result of a comparison between said linear speed control feedback loop and said current feedback signal, said comparison output indicative of the error in the desired position of said rotor in said electric motor and of said current feedback signals;
a transistor circuit coupled to said comparison output, said transistor circuit providing linear closed loop speed control feedback to said electronic commutation when said current feedback signal does not exceed a predetermined value and said switching transistor providing an oscillating pulse width modulation control of said electronic commutation when said current feedback signal exceeds said predetermined value.

4,371,819

PULSE WIDTH MODULATION SPEED CONTROL

Kenneth M. Kaufmann, Minneapolis, Minn., assignor to Pako Corporation, Minneapolis, Minn.

Filed Dec. 11, 1980, Ser. No. 215,441

Int. Cl.³ H02P *5/06*

U.S. Cl. 318—341 5 Claims

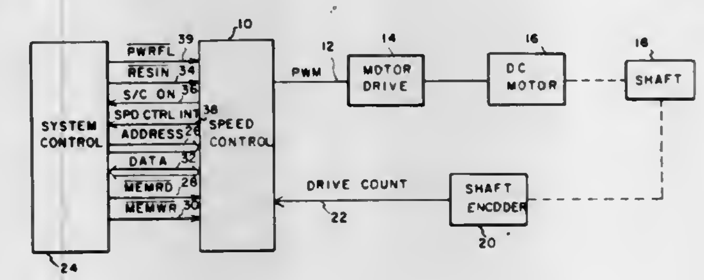

1. A drive system comprising:
a DC electric motor;
a drive shaft driven by the DC electric motor;
encoder means for providing encoder pulses in response to incremental rotation of the drive shaft;
means for sensing time periods between selected encoder pulses and providing first digital values representative of the sensed time periods;
means for storing a second digital value representative of a desired time period corresponding to a desired speed;
means for comparing sensed and desired time periods and providing a third digital value which is a function of the comparison of the sensed and desired time periods; wherein the means for comparing compares the second digital value representative of the desired time period with an average of a plurality of first digital values representative of consecutive sensed time periods; and wherein the means for comparing compares the plurality of first digital values representative of consecutive sensed time periods with one another and permits a change in the third digital value only if the first digital values representative of consecutive sensed time periods are within a predetermined range of one another; and
means for energizing the DC electric motor for a time interval which is a function of the third digital value.

4,371,820

ROTARY LINE TRANSFER SWITCH

Johann Kruger, San Carlos, Calif., assignor to Electro-Motion, Inc., Redwood City, Calif.

Filed Aug. 17, 1981, Ser. No. 293,347

Int. Cl.³ G05B *5/00*

U.S. Cl. 318—468 6 Claims

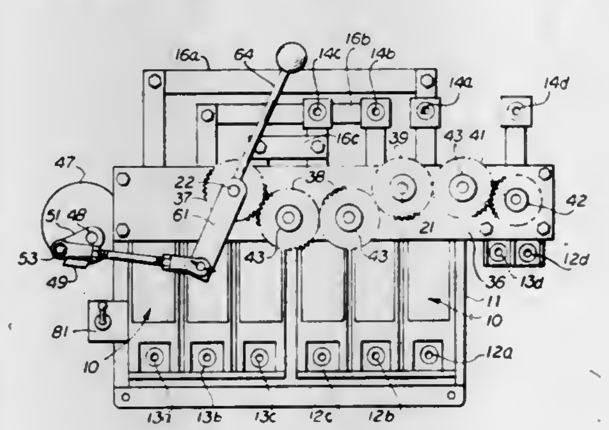

1. An oscillatory line transfer switch comprising a first oscillatory switch having a first casing and a first shaft extending externally of a first end of said first casing, a second oscillatory switch having a second casing and a second shaft extending externally of a first end of said second casing, a frame securing said casings together in side-by-side position, first means external of said casings for turning said first and second shafts together, at least two separate normal power input terminals for said first switch, at least two emergency power input terminals for said second switch, each said switch having at least two power output terminals, the corresponding power output terminals of said two switches being electrically connected together, second means sensing decline in voltage at said normal power input terminals below a pre-selected voltage, third means sensing frequency at said emergency power input terminals above a pre-selected frequency, a motor, a third shaft driven by said motor, fourth means for energizing said motor for rotation of said third shaft through one cycle of rotation upon energization of either said second or third means and fifth means mechanically connecting said third shaft to first shaft to oscillate said first and second shafts, said fifth means including a first crank fixed to said third shaft, an arm loose on said third shaft positioned to be turned by said first crank as said third shaft turns, a connecting rod, a pin pivotally connecting a first end of said connecting rod to said arm, a second crank fixed to said first shaft, the second end of said connecting rod being pivotally connected to said second crank, and manual means for oscillating said one of said first and second shafts independently of rotation of said third shaft.

4,371,821

ELECTROMAGNETIC MOTOR ROTATABLE IN EITHER DIRECTION

Claude Laesser, La Chaux-de-Fonds; Roberto Zafferri, Lugano, and Jean Depery, Neuchtel, all of Switzerland, assignors to Ebauches S.A., Neuchatel, Switzerland

Filed Jul. 3, 1980, Ser. No. 165,563

Int. Cl.³ G05B *19/40*

U.S. Cl. 318—696 17 Claims

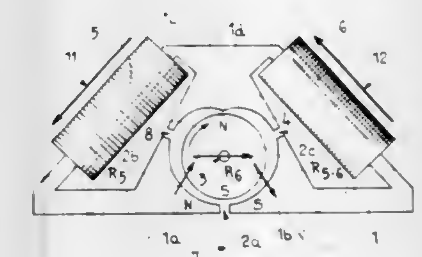

1. A bidirectional stepping motor comprising:
a rotor constituted by a permanent magnet mounted for rotation about an axis and providing a permanent magnetic field;
a stator including two and only two electrical coils, an armature including three and only three pole faces, said pole faces consisting of first, second and third pole faces arranged around said rotor, means for providing a first magnetic path connecting the first pole face to the second pole face and for mounting one of said two coils, and means for providing a second magnetic path connecting the first pole face to the third pole face and for mounting the other of said two coils; and
means for applying electrical pulses independently to each coil while controlling the polarity of said pulses, the polarity of said pulse determining the sense of the magnetic fields for reversibly controlling said rotor.

4,371,822

CONTROL DEVICE FOR PULSE MOTORS, HAVING A FAIL SAFE FUNCTION

Kazuo Otsuka, Higashikurume; Shin Narasaka, Yono, and Shumpei Hasegawa, Niiza, all of Japan, assignors to Honda Motor Co., Ltd., Tokyo, Japan

Filed Aug. 25, 1981, Ser. No. 296,015

Claims priority, application Japan, Aug. 29, 1980, 55-120144

Int. Cl.[3] H02K *29/04*

U.S. Cl. 318—696 8 Claims

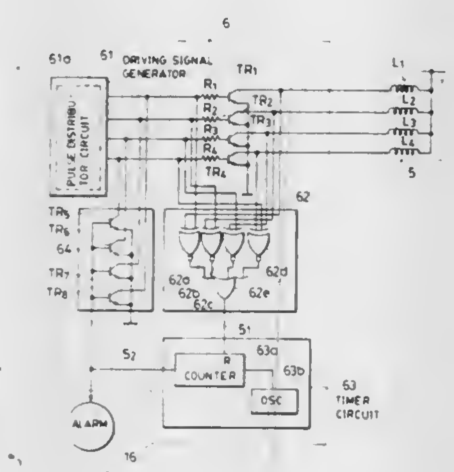

1. A control device for driving a pulse motor having a stator and a plurality of stator coils wound on said stator in a polyphase arrangement, said control device comprising:

a driving circuit comprising:

generator means having a plurality of output terminals and adapted to generate driving pulses at said output terminals in a predetermined sequence, and

a plurality of power transistors, each having (i) an input terminal coupled to a corresponding one of said output terminals of said generator means, and (ii) an output terminal at which the power transistor is adapted to generate an output signal having a level which is in a predetermined relationship with the level of an input signal applied to the input terminal thereof,

the output terminal of each power transistor being coupled to a corresponding one of said stator coils of said pulse motor,

said power transistors being sequentially energized by said driving pulses generated by said generator means in said predetermined sequence to sequentially energize said stator coils;

an abnormality detecting circuit for (i) comparing the level of the input signal applied to the input terminal of each of said power transistors with the level of the output signal at the output terminal thereof and (ii) generating a malfunction indicating signal when said two levels are out of said predetermined relationship; and

a timer circuit coupled to said abnormality detecting circuit for generating a warning signal when said malfunction indicating signal is continuously generated over a predetermined period of time.

4,371,823

APPARATUS AND METHOD FOR STARTING TEXTILE WINDER SYNCHRONOUS MOTOR DRIVES

Hans Lohest, Remscheid, Fed. Rep. of Germany, assignor to Barmag Barmer Maschinenfabrik AG, Remscheid, Fed. Rep. of Germany

Continuation of Ser. No. 20,539, Mar. 14, 1979, abandoned. This application Dec. 24, 1980, Ser. No. 219,966

Claims priority, application Fed. Rep. of Germany, Mar. 15, 1978, 2811123

Int. Cl.[3] H02P *1/04*

U.S. Cl. 318—705 11 Claims

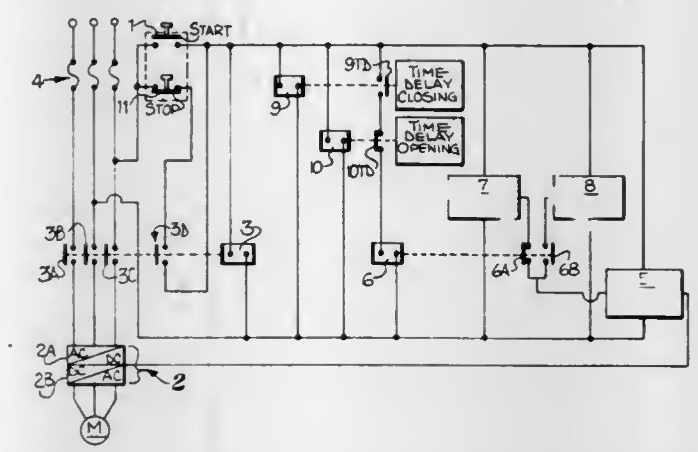

1. A method for accelerating a synchronous motor for standstill to rated synchronous running speed, comprising:

coupling a synchronous motor to a variable frequency source of alternating current;

accelerating said motor asynchronously to a first predetermined intermediate speed lower than rated running speed by increasing the frequency of said current according to a first predetermined function; then

decelerating said motor to a second predetermined intermediate speed lower than said first intermediate speed by decreasing the frequency of said current according to a second predetermined function, thereby synchronizing said motor at said second intermediate speed; and then

accelerating said motor synchronously from said second intermediate speed to the rated running speed by increasing the frequency of said current according to a gradual third predetermined function; while thereby maintaining the magnitude of the current drawn by the motor from said source at levels not exceeding a predetermined amount.

4,371,824

BASE DRIVE AND OVERLAP PROTECTION CIRCUIT

David J. Gritter, Southfield, Mich., assignor to Eaton Corporation, Cleveland, Ohio

Filed Jul. 5, 1979, Ser. No. 55,139

Int. Cl.[3] H02P *7/58*

U.S. Cl. 318—722 30 Claims

1. A base drive and overlap protection circuit comprising:

power switching means;

means operative to monitor current flow through said power switching means and to generate a negative current signal as a function thereof; and

gating means operative to receive said negative current signal, switch command signals from a control circuit and an enable

signal from an enabling circuit, and to generate a switching signal in response thereto, said power switching means being

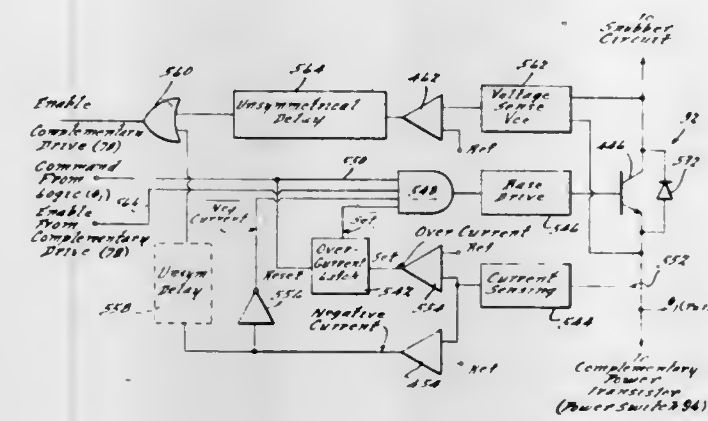

operative to switch from a first state to a second state in response to said switching signal.

4,371,825

METHOD OF MINIMIZING THE EFFECTS OF PARASITIC CURRENTS

Michael C. Chi, Cerritos, Calif., and Peter Carr, Utica, Mich., assignors to Energy Development Associates, Inc., Madison Heights, Mich.

Filed Jun. 4, 1981, Ser. No. 270,481

Int. Cl.[3] H01M *10/44*

U.S. Cl. 320—5 24 Claims

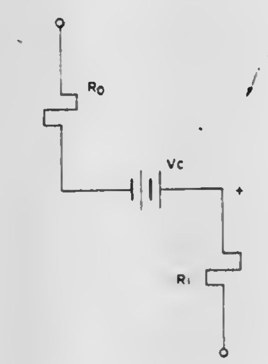

1. A method of minimizing cell imbalances due to parasitic currents in a secondary electrochemical energy storage device having a plurality of cells formed in two groups with said cells in each of said groups connected electrically in series, and a common electrolyte in communication with each of said cells in said groups of cells, comprising the steps of:

charging said energy storage device with said groups of cells connected electrically in series; and

discharging said energy storage device with said groups of cells reconnected electrically in series in an inverted sequence.

4,371,826

NON-DISSIPATIVE BATTERY CHARGE CIRCUIT

Randolph D. W. Shelly, Rosemere, Canada, assignor to Sperry Corporation, New York, N.Y.

Filed Jan. 16, 1981, Ser. No. 225,768

Int. Cl.[3] H02J *7/04*

U.S. Cl. 320—21 9 Claims

1. A battery charging system for charging a battery from an unregulated voltage source by delivering fixed maximum amplitude pulse width modulated constant current charging signals comprising:

input means for coupling to a source of charging voltage;

battery voltage level determining means for determining when the battery is fully charged and for providing a charge disabling signal when the battery is fully charged;

charging current switch means coupled to said input means, and including control means, said charging current switch means for causing conducting of charging current when said control means is activated;

charging current sensing means coupled to said charging current switch means for sensing the levels of said charging current and for providing current level indicating signals in response to said levels;

charging current comparison means coupled to said charging current sensing means for comparing said charging current to a predetermined reference for providing reset signals when a predetermined current level comparison is sensed;

non-dissipative impedance means coupled to said charging current sensing means for providing said charging current to the battery being charged;

charge cycle control means coupled to said battery voltage level determining means and said charging current comparison means for sequentially providing activating signals for successive charge cycles until said battery voltage level determining means indicates the battery is fully charged, wherein said charge cycle control means includes

clock means for providing clocking signals at a predetermined frequency;

flip-flop means having output means for providing signals indicative of its state, set input means coupled to said clock means for causing said flip-flop means to exhibit a first state in response to said clocking signals, and reset input means coupled to said charging current comparison means for

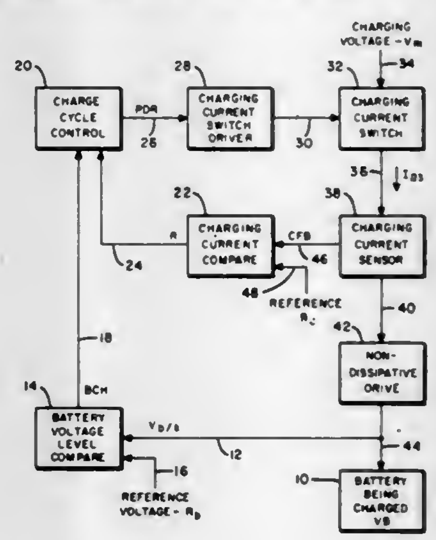

causing said flip-flop means to exhibit a second state in response to said reset signals;

logic means responsively coupled to said battery voltage level determining means, said clock means, and said flip-flop means for providing said activating signals to said charging current switch driver means for controlling activation of said charging current switch means to provide said charging current; and

wherein said logic means includes

gating means for controlling termination of the charging of the battery, said gating means having first gate input means coupled to said battery voltage level determining means, second gate input means, and gate output means for providing a disabling signal when the battery is fully charged;

enabling means for controlling activation of said charging current switch driver means, said enabling means having first enable input means coupled to said gate output means, second enable input means coupled to said clock means, third enable input means coupled to said flip-flop means, and enable output means coupled to said second gate input means and to said current switch driver means for providing said activating signals to said charging current switch driver means when signals received on said first, second and third enable input means have a predetermined relationship; and

charging current switch driver means coupled intermediate said charge cycle control means and said charging current switch means for providing drive signals for activating said control means and causing said charging current switch

means to provide charging current in response to each of said activating signals.

4,371,827

BATTERY CHARGER WITH INDICATOR FOR INDICATING FULL CHARGE OF SECONDARY CELLS OR BATTERY THEREOF

Ferdinand H. Mullersman, and Clifford L. Scholefield, both of Gainesville, Fla., assignors to General Electric Company, Gainesville, Fla.

Filed Aug. 22, 1980, Ser. No. 180,196

Int. Cl.^{3} H02J *7/00;* G01K *11/12*

U.S. Cl. 320—48 **7 Claims**

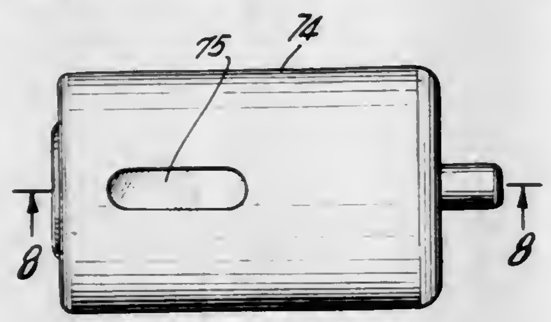

1. An improved battery charger having a housing and electrical contact means for coupling a charging power supply to cells or batteries to be charged, wherein the improvement comprises a full charge indicator mounted to the housing adjacent each charge location in the housing for indicating when a cell or battery in the adjacent charge location has reached essentially full charge, each said indicator comprising heat sensitive means adapted to display a change in some perceivable characteristic when subjected to a rise in temperature, a first element of said heat sensitive means being thermally coupled to the battery or cell so that said element is maintained at substantially the same temperature as the battery or cell, and a second element of said heat sensitive means being thermally isolated from the battery or cell so that it remains substantially at ambient temperature; such that once the battery or cell has reached essentially full charge, further charging causes said first element to undergo a change in said perceivable characteristic as a result of the change in temperature of the battery or cell, while the perceivable characteristic of said second element remains essentially unchanged, with the relative difference in the perceivable characteristic of the two elements being observable.

4,371,828

AUTONOMOUS ELECTRICAL POWER GENERATOR

Giovanni Tornatore, San Benigno Canavese, and Lorenzo Bogetti, Piobesi Torinese, both of Italy, assignors to Fiat Auto S.p.A., Turin, Italy

Filed Apr. 28, 1981, Ser. No. 257,843

Claims priority, application Italy, May 5, 1980, 67698 A/80

Int. Cl.^{3} H02K *11/00;* H02P *9/04*

U.S. Cl. 322—32 **5 Claims**

1. An autonomous electrical power generator comprising
a prime mover,
a three-phase asynchronous electrical machine coupled to said prime mover and acting, in use, as a generator,
at least one set of three delta-connected capacitors, the vertices of this delta-connection each being connected to a respective phase of the said electrical machine; the capacitance values of said capacitors being such that, in operation, the said capacitors constitute together with the said windings of the electrical machine, three circuits resonating at a frequency corresponding to the speed of rotation of the machine,
respective inductors connected in series with the capacitors of the said at least one set of capacitors so as to form therewith at least one set of three L-C series resonators; the inductance values of said inductors being such that the resonant frequency of the resonators of each of the said at least one set of resonators is substantially equal to a corresponding predetermined odd harmonic of the frequency of the voltage supplied, in use, by the said electrical machine, and,

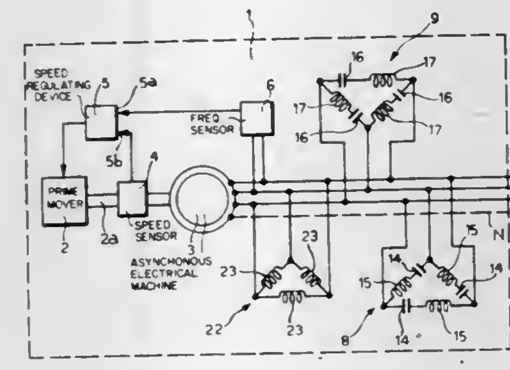

a set of three delta-connected saturable reactors, the vertices of this delta-connection each being connected to a respective phase of said electrical machine.

4,371,829

CAPACITOR UNIT WITH A DISCHARGE RESISTOR SWITCH

Seymour Salowe, Murrysville, and Thomas C. Zinchuk, Level Green, both of Pa., assignors to Westinghouse Electric Corp., Pittsburgh, Pa.

Filed Nov. 13, 1981, Ser. No. 321,159

Int. Cl.^{3} H02J *3/18*

U.S. Cl. 323—209 **10 Claims**

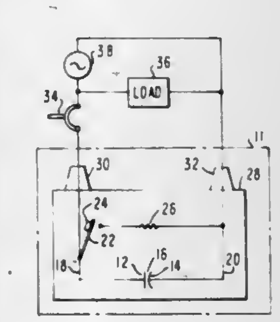

1. A capacitor unit comprising:
two capacitor electrodes separated by dielectric material;
two conductive leads each electrically connected to one of said capacitor electrodes;
a branch circuit connected between said conductive leads;
said branch circuit including a resistor and a switch in series with said resistor; and
said switch including means responsive to power frequency current flowing in the conductive leads for opening said circuit branch when power frequency current is flowing in the capacitor unit, and for maintaining said circuit branch closed when power frequency current is not flowing in the capacitor unit to discharge residual charge from said capacitor electrodes.

4,371,830

HIGH VOLTAGE CHARGE-REGULATING POWER SUPPLY FOR A PULSED LOAD

Richard S. Loucks, Northridge, Calif., assignor to International Telephone and Telegraph Corporation, New York, N.Y.

Filed May 21, 1981, Ser. No. 265,958

Int. Cl.^{3} G05F *1/44*

U.S. Cl. 323—265 **8 Claims**

1. A high voltage dc power supply for a load which draws current during recurrent pulse times and substantially no current between pulses, comprising:
a first capacitor, a source of current at high voltage and a first diode connected between said capacitor and said source to provide charging of said capacitor;
a ground potential return circuit between said source and said first capacitor and a second diode connected in series in said return circuit, said second diode being polarized so as to pass current during discharge but not during charging of said capacitor, the grounded terminal of said second diode and the junction of said first diode and said capacitor providing the terminals for connecting said load;
a high voltage threshold sensing circuit connected to measure

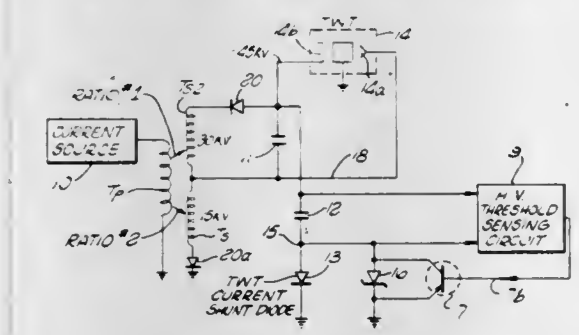

the voltage across said capacitor and to generate a switching signal in a first condition when said capacitor charges to a predetermined voltage and in a second condition whenever said capacitor voltage has an absolute value less than said predetermined voltage; and
control means responsive to said switching signal and connected in parallel with said second diode for clamping the junction of said capacitor and said second diode to ground during said switching signal second condition and for providing a voltage pedestal at said capacitor and second diode junction during said first switching signal condition.

4,371,831

MONITORING DEVICE FOR DISTINGUISHING THE OPERATING STATE OF A LOAD

Rainer Boschulte; Heinrich Koehnecke, and Siegfried Muecke, all of Brunswick, Fed. Rep. of Germany, assignors to Siemens Aktiengesellschaft, Berlin & Munich, Fed. Rep. of Germany

Filed Nov. 24, 1980, Ser. No. 209,483

Claims priority, application Fed. Rep. of Germany, Dec. 27, 1979, 2952462

Int. Cl.^{3} G05F *1/00*

U.S. Cl. 323—284 **3 Claims**

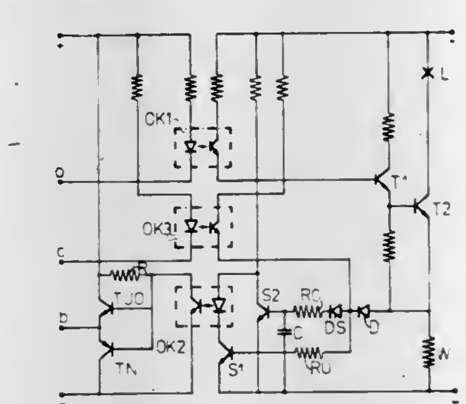

1. A device for checking at least a first threshold switch in a monitoring device for distinguishing the operating states of a load, comprising:
said first threshold switch;
a second threshold switch connected to said first threshold switch and operable in response to a control potential above a predetermined maximum value to drive said first threshold switch into a first state, said first threshold switch operable in response to a control potential above a predetermined minimum value to switch from the first state to a second state;
a precision resistor connected in series with the load for providing a control potential representing the current through the load, said precision resistor connected to control said second threshold switch; and
check means including a check signal input for receiving a check signal, said check means connected to said load, said precision resistor and said second threshold switch and operable in response to a control potential above a predetermined maximum value to operate said second threshold switch in response to receipt of a check signal and a control potential above a predetermined minimum value.

4,371,832

DC GROUND FAULT DETECTOR WHEREIN FAULT IS SENSED BY NOTING IMBALANCE OF MAGNETIC FLUX IN A MAGNETIC CORE

Gerald L. Wilson, 29 Highgate Rd., Wayland, Mass. 01778, and David Otten, 50 Playstead Rd., Newton, Mass. 02158

Filed May 27, 1980, Ser. No. 153,710

Int. Cl.^{3} G01R *31/02, 19/10, 33/00*

U.S. Cl. 324—51 **24 Claims**

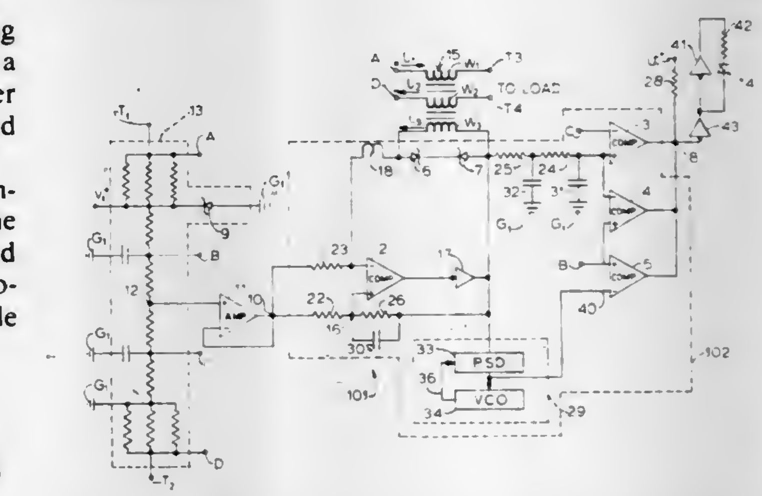

1. A dc ground fault detector that comprises a high permeability toroidal core having a square hysteresis loop; three windings wound about the toroid in a solenoidal configuration, two of the windings having an equal number of turns; means for introducing an electric current into one of the two windings, which current, in a normally operating detector, flows through to a load whose ground condition is to be sensed and then to the other of the two windings, the current in one of the two windings being caused to flow in a direction that produces a magnetomotive force opposite to the direction of the magnetomotive force of the other winding of the two windings; sensing means operable to determine any difference between the currents in the two windings, which difference drives the core into saturation, said sensing means comprising a voltage source and series resistor connected across the third of the three windings, said sensing means further including means to reverse the polarity of the voltage applied by the voltage source every time current through the third winding reaches a predetermined value, there being an increase in the frequency of the voltage as the core becomes more saturated; and measuring means connected to the voltage surce and operable to measure the frequency of the voltage applied to the third winding and operable to relate the frequency to the presence or absence of ground fault.

4,371,833

SPEED SWITCH

William J. Roberts, Toledo, Ohio, assignor to Eltra Corporation, Toledo, Ohio

Filed Jun. 11, 1980, Ser. No. 158,658

Int. Cl.^{3} G01P *3/56*

U.S. Cl. 324—161 **16 Claims**

1. A speed limiting indicating device for an internal combustion engine having:

(a) an engine speed sensor providing a first signal indicative of engine speed;
(b) means responsive to said first signal for providing a speed limit signal indicative of said engine speed exceeding a predetermined speed limit;
(c) said speed limit signal means including logic gate means having its input connected to said first terminal for providing said speed limit signal at said predetermined limit speed;

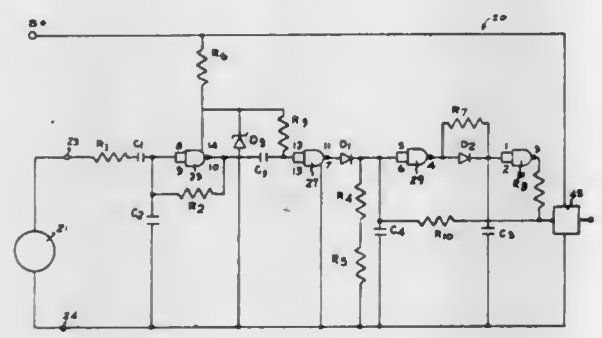

said logic gate means including at least first and second gates and first and second timing circuits;
said first gate having its input connected to said first signal and to said first timing circuit and a second gate having its input connected to said second timing circuit and the input of said first gate and providing said speed limit signal at its output.

4,371,834
DEVICE FOR MEASURING THE FREQUENCY OF AN ELECTRICAL CURRENT REPRESENTATIVE OF A VARIABLE QUANTITY
Jean-Jacques Bezard, La Garenne Colombes, and Bernard A. Delevallee, Argenteuil, both of France, assignors to Jaeger, Levallois-Perret, France
Filed May 18, 1981, Ser. No. 264,396
Claims priority, application France, May 14, 1980, 80 10911
Int. Cl.³ G01P *3/48, 3/54*
U.S. Cl. 324—167 8 Claims

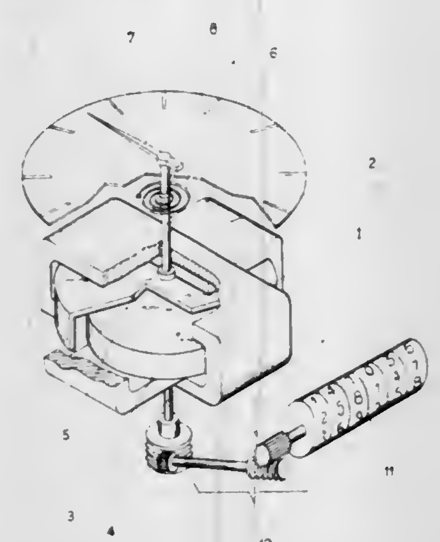

1. A device responsive to a variable quantity, comprising:
means sensitive to said variable quantity for producing and transmitting a signal composed of pulses having a frequency proportional to said variable quantity;
a permanent magnet integral with a first spindle, said first spindle having an axis of rotation, said magnet being arranged transversely with respect to said axis of the first spindle and mounted to rotate freely about the axis of said first spindle;
a cup-shaped rotor of conducting material disposed in the vicinity of and covering said permanent magnet, said rotor being integral with a second spindle, said second spindle having an axis which is aligned with the axis of the first spindle, said rotor being mounted to pivot about the axis of said second spindle;
a return spring acting upon said second spindle and mounted to exert a torque opposing the rotation of the rotor;
an indicator needle supported by said second spindle transversely to its axis for indicating the position of the rotor;
at least two coils offset angularly to each other and surrounding said permanent magnet and said cup-shaped rotor; and
a receiver device which receives said pulses and supplies said two coils with square wave signals produced from said pulses in order to produce a transverse magnetic field with respect to the axis of the first spindle, said transverse magnetic field having a rotary nature about said axis of the first spindle, so as to produce a rotation of said permanent magnet at a speed proportional to said variable quantity, whereby the cup-shaped rotor is subjected to a driving torque due to the production of eddy currents generated when the permanent magnet rotates and to an opposing torque due to the return spring, the cup-shaped rotor being immobilized in a predetermined position representative of said variable quantity when the opposing torque equals said driving torque.

4,371,835
RPM DETECTION SYSTEM FOR INTERNAL COMBUSTION ENGINE
Yoshiyuki Kago; Sigeyuki Akita, both of Okazaki, and Katsuhisa Fujikawa, Toyota, all of Japan, assignors to Nippon Soken, Inc., Nishio, Japan
Filed Sep. 29, 1980, Ser. No. 191,682
Claims priority, application Japan, Oct. 2, 1979, 54-136884[U]
Int. Cl.³ G01P *3/48*
U.S. Cl. 324—174 8 Claims

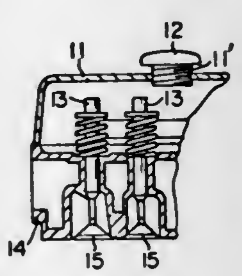

1. In an internal combustion engine having a cylinder head cover provided with an oil inlet and a valve drive mechanism disposed within said cylinder head cover, an rpm detection system for detecting the number of revolutions of the engine, comprising:
a pre-magnetized valve operating member constituting a component element of said valve drive mechanism and located in the neighborhood of said oil inlet;
a magnetic sensor removably mounted in said oil inlet for detecting the changes of the magnetic field in said magnetized valve operating member accompanying the motion thereof; and
a processing circuit means for converting the detection signal from said magnetic sensor into a pulse signal having a frequency proportional to the engine rpm.

4,371,836
DEVICE FOR MEASURING THE LOCATION, ATTITUDE AND/OR CHANGE OF LOCATION OR, RESPECTIVELY ATTITUDE OF A RIGID BODY IN SPACE UTILIZING TWO SETS OF FOUR PARALLEL ANTENNAS FOR CONCENTRATING THE FIELD LINES
Bernd Nickel, Lorsch, and Wolfgang Schorr, Lautertal, both of Fed. Rep. of Germany, assignors to Siemens Aktiengesellschaft, Berlin & Munich, Fed. Rep. of Germany
Filed Dec. 4, 1979, Ser. No. 100,146
Claims priority, application Fed. Rep. of Germany, Dec. 6, 1978, 2852764
Int. Cl.³ G01B *7/14;* A61B *5/10*
U.S. Cl. 324—207 9 Claims

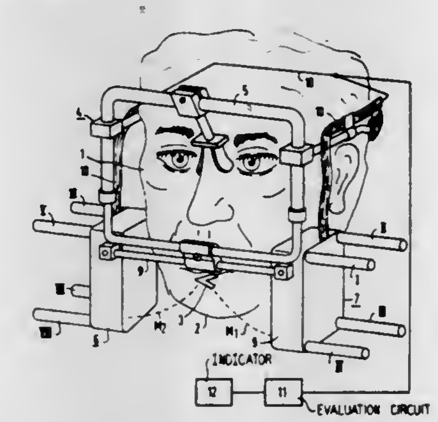

1. A measuring device for operative association with a rigid body for sensing movement thereof in space, said measuring device comprising a field generator attached to said body for generating a defined irregular field, pickups having field-flux-dependent sensor elements for sensing movement of the field generator relative thereto when the field generator and pickups are mounted for relative movement in accordance with the movement of a rigid body in space during a measurement operation, and an electronic circuit connected to the pickups for obtaining and evaluating electric signals arising from movement of the field generator relative to the field-flux-dependent sensor elements, the sensor elements (13) of the pickups (I through VIII) having respective elongated antennae (14, 15) concentrating the field lines at the respective sensor elements and having respective ends closest to the field generator (3) forming eight corner points (A through H) of a cuboid (25) with the field generator (3) arranged within the space determined by the eight corner points (A through H) of the cuboid, the sensor elements (13) having respective effective surfaces (24) which are perpendicular to the longitudinal axes of the respective elongated antennae (14, 15), said antennae being arranged in two sets of four elongated antennae, each set of four elongated antennae being arranged with the antennae thereof parallel to one another and the two sets arranged at respective opposite sides of the field generator (3).

4,371,837
TEMPERATURE COMPENSATED INPUT POWER AND OUTPUT OFFSET CIRCUITS FOR A HALL EFFECT TRANSDUCER
Walter J. Sieverin, McHenry, Ill., assignor to American Can Company, Greenwich, Conn.
Filed Nov. 13, 1979, Ser. No. 93,885
Int. Cl.³ G01R *33/06;* G01N *27/72;* H03K *17/90, 19/08*
U.S. Cl. 324—225 5 Claims

1. A temperature and offset voltage compensating circuit for a Hall effect transducer comprising:
a supply circuit means connected between a power source and the power supply input of a Hall effect transducer including a constant current source and a load responsive voltage reference source for adjusting the overall current available to said transducer in accordance with changes in gain and input power resistance as a result of temperature change while being responsive to small changes in magnetic field, where said supply circuit means being responsive to resistance changes of said transducer as a function of temperature to vary and adjust input power to said transducer in accordance with changes in resistance thereof and to prevent any changes in signal output gain due to transducer resistance fluctuations; and
an output circuit means connected to the output of said Hall effect transducer and having a temperature responsive thermistor as part of a control system for feeding a differ-

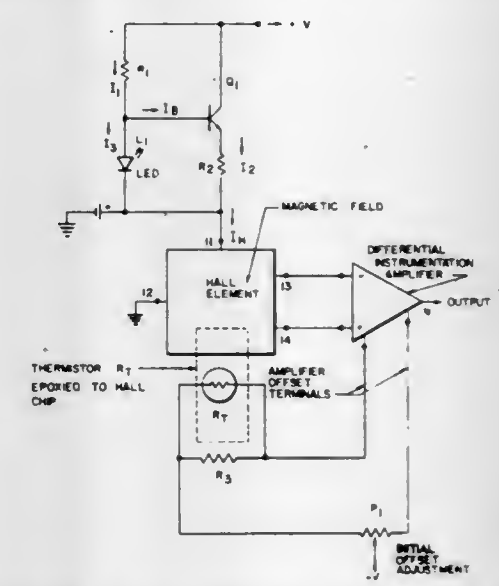

ential amplifier in said system and connected to the output of said transducer and a thermistor adjacent said transducer in circuit with an adjustable resistance for zeroing the initial offset of said transducer and linearizing the signal of said thermistor to provide a controlling input from said thermistor to said amplifier for correcting said Hall effect output in accordance with ambient temperature changes at said transducer.

4,371,838
OPTICAL FIBER WAVEGUIDE FOR MEASURING MAGNETIC FIELDS
David L. Griscom, Alexandria, Va., assignor to The United States of America as represented by the Secretary of the Navy, Washington, D.C.
Filed Sep. 24, 1980, Ser. No. 190,298
Int. Cl.³ G01R *33/00*
U.S. Cl. 324—244 17 Claims

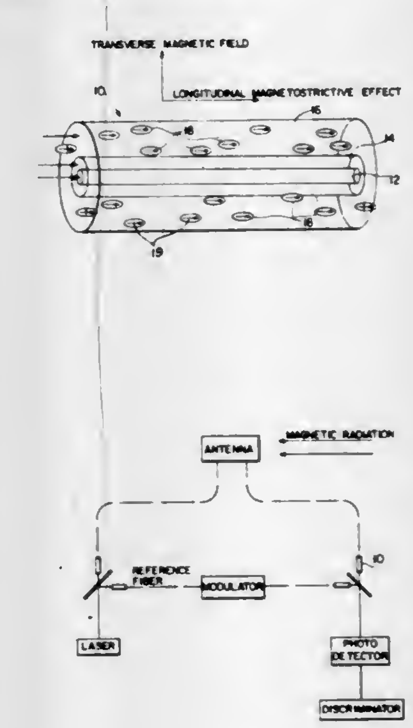

1. An optical fiber waveguide for use in the detection of a

magnetic field or magnetic radiation accompanying an electro-magnetic signal comprising:
- an optical fiber waveguide including numerous discrete elongate single-domain magnetized particles;
- said particles having their longitudinal axes and magnetization vectors disposed generally parallel with the longitudinal axis of the waveguide;
- a laser with its beam directed into one end of said waveguide;
- interferometric means for sensing phase shifts in the light of said laser passing through said waveguide; and
- means for subjecting said waveguide to a tranverse magnetic field;
- whereby, said transverse magnetic field causes the elongate particles to undergo linear dimension change due to the magnetostrictive effect and to cause linear dimension changes in the optical fiber waveguide so that a laser beam light passing therethrough undergoes phase shifts detectable with interferometry.

4,371,839
DIFFERENTIALLY COHERENT SIGNAL DETECTOR
Michael D. Rubin, Saratoga, Calif., assignor to Ford Aerospace & Communications Corporation, Detroit, Mich.
Filed Apr. 3, 1980, Ser. No. 136,866
Int. Cl.³ H04L *27/22*
U.S. Cl. 329—104 **1 Claim**

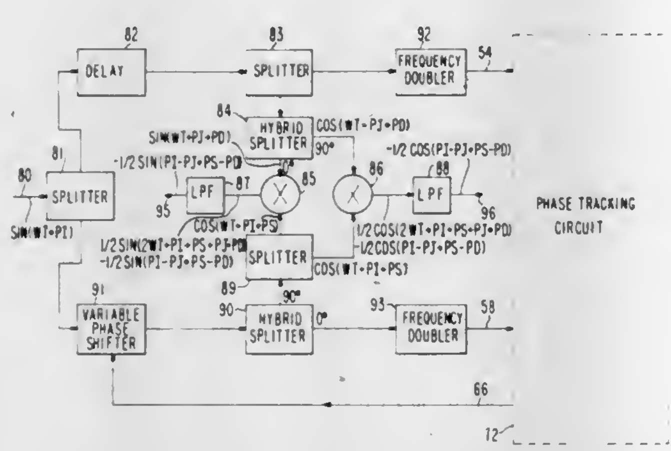

1. A differentially coherent signal detector comprising:
- a first splitter having as an input the signals to be demodulated;
- a delay means having an input connected to a first output of the first splitter;
- a second splitter having an input connected to an output of the delay means;
- a variable phase shifter having a first input connected to a second output of the first splitter;
- a third splitter having an input connected to an output of the variable phase shifter;
- a first mixer having a first input connected to a first output of the second splitter and having a second input connected to a quadrature output of the third splitter;
- a first low pass filter having an input connected to an output of the first mixer and having as an output the demodulated signals;
- a fourth splitter having an input connected to a second output of the second splitter;
- a fifth splitter having an input connected to an inphase output of the third splitter;
- a second mixer having a first input connected to a first output of the fourth splitter and having a second input connected to a quadrature output of the fifth splitter;
- a third mixer having a first input connected to a second output of the fourth splitter and having a second input connected to an inphase output of the fifth splitter;
- a second low pass filter having an input connected to an output of the second mixer;
- a third low pass filter having an input connected to an output of the third mixer;
- a multiplier having a first input connected to an output of the second low pass filter and having a second input connected to an output of the third low pass filter;
- a conditioning amplifier having an input connected to an output of the multiplier and having an output connected to a second input of the variable phase shifter;
- a sixth splitter connected between said second splitter and said first mixer;
- a seventh splitter connected between said third splitter and said first mixer;
- a fourth mixer connected between said sixth splitter and said seventh splitter;
- a fourth low pass filter connected to said fourth mixer;
- a first frequency doubler connected between said second splitter and said fourth splitter; and
- a second frequency doubler connected between said third splitter and said fifth splitter.

4,371,840
GAIN CONTROL CIRCUIT FOR PULSE WIDTH MODULATION AMPLIFIER
Kenji Yokoyama, Hamamatsu, Japan, assignor to Nippon Gakki Seizo Kabushiki Kaisha, Japan
Filed Jul. 14, 1980, Ser. No. 168,726
Claims priority, application Japan, Aug. 8, 1979, 54-109327
Int. Cl.³ H03F *3/38*
U.S. Cl. 330—10 **8 Claims**

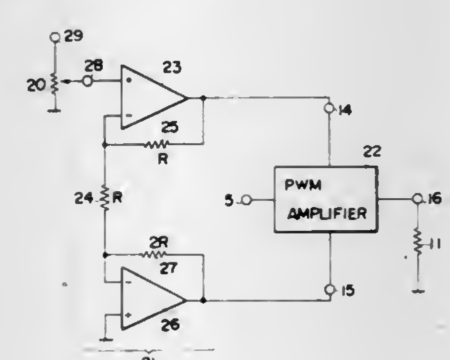

1. In a gain control circuit for a pulse width modulation amplifier comprising a pulse width modulation circuit which modulates a carrier signal by an input signal applied to said pulse width modulation amplifier to make a pulse width modulated signal, a pulse amplification circuit for amplifying said pulse width modulated signal to generate an amplified pulse width modulated signal, said pulse amplification circuit having two power supply terminals and said amplified pulse width modulated signal having an amplitude of a same value as a value of the voltage supplied to said two power supply terminals, and a low-pass filter circuit adapted for use in obtaining an output signal having the same waveform as said input signal from said amplified pulse width modulated signal, said gain control circuit comprising,
- variable voltage supplying means capable of supplying a variable voltage to said two power supply terminals of said pulse amplification circuit, said amplitude of said amplified pulse width modulated signal being varied by varying the voltage supplied to said two power supply terminals of said pulse amplification circuit, so that an amplitude of said output signal derived from said low-pass filter circuit being varied, whereby the gain of the pulse width modulation amplifier is controlled in accordance with the supply voltage applied to the pulse amplification circuit.

4,371,841
CIRCUIT ARRANGEMENT FOR ELIMINATING TURN-ON AND TURN-OFF CLICKS IN AN AMPLIFIER
Wolfgang Eckert, Reinfeld; Bernd Holtkamp, and Ernst A. Kilian, both of Hamburg, all of Fed. Rep. of Germany, assignors to U.S. Philips Corporation, New York, N.Y.
Filed Jul. 24, 1980, Ser. No. 171,691
Claims priority, application Fed. Rep. of Germany, Aug. 1, 1979, 2931144
Int. Cl.³ H03F *1/14*
U.S. Cl. 330—51 **7 Claims**

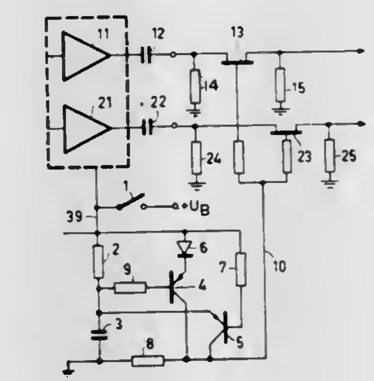

1. A circuit arrangement for eliminating turn-on and turn-off clicks in an amplifier comprising:
- an amplifier,
- a controllable switching device for interrupting the signal path of said amplifier included in the signal path after said amplifier,
- a supply voltage,
- a series connection of a capacitor and a resistor said supply voltage connected to said amplifier through said capacitor and resistor,
- two transistors the base-emitters of said transistors being connected in parallel with said resistor, a first one of said transistors being arranged such that it is turned on by the voltage drop produced across said resistor by the charging current of said capacitor and the second transistor being arranged such, that it is turned on by the voltage drop produced across said resistor by the discharge current of said capacitor, and the collector currents of said transistors serving to control said switching device.

4,371,842
SELF-ADJUSTING DUAL MODE AUTOMATIC GAIN CONTROL CIRCUIT
Patrick S. Lee, Campbell, Calif., assignor to Sperry Corporation, New York, N.Y.
Filed Oct. 24, 1980, Ser. No. 200,364
Int. Cl.³ H03G *3/30*
U.S. Cl. 330—141 **7 Claims**

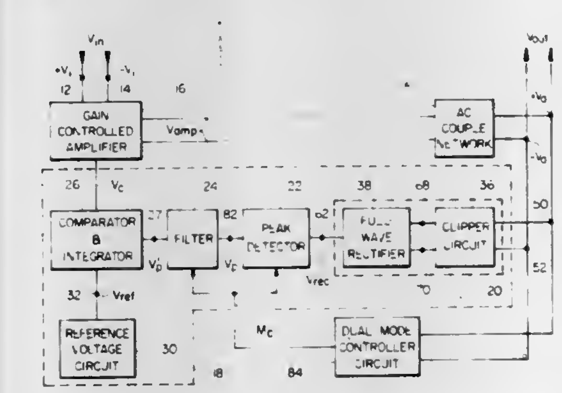

1. A dual mode automatic gain control circuit for generating control signals to a gain controlled amplifier for producing substantially constant amplitude pulse-type output data signals from said amplifier from variable amplitude pulse-type input data signals subjected to having relatively long data gaps therein, said automatic gain control circuit including:
- a voltage limiter coupled to the output of the gain controlled amplifier for clipping those output data signals having amplitudes above a predetermined level and for rectifying said output signals into D.C. signals of corresponding amplitudes;
- peak detector circuitry coupled to said voltage limiter, said detector circuitry including a capacitor in parallel with discharge circuitry having component values that discharge said capacitor slower than the rate said capacitor is charged by said D.C. signals;
- filter circuitry coupled to said peak detector;
- comparator circuitry coupled to the output of said filter circuitry for comparing the output signal from said filter circuitry with a fixed reference voltage, and for generating the control signals for said gain controlled amplifier; and
- mode controlling means within said automatic gain control circuit and coupled to said peak detector and to said filter circuitry, said mode controlling means responsive to the output data signals from said gain controlled amplifier for generating a first and a second mode signal to said peak detector circuitry and to said filter circuitry for altering component values in said circuitries, said first mode signal representing a fast mode for producing a control signal for a continuous train of pulse-type input data signals, said second mode signal representing a slow mode for producing control signals for gaps in said input data signals.

4,371,843
SEMICONDUCTOR DIFFERENTIAL AMPLIFIER CIRCUIT WITH FEEDBACK BIAS CONTROL
San-Chin Fang, New York, N.Y., and Donald L. Fraser, Jr., Warren Township, Somerset County, N.J., assignors to Bell Telephone Laboratories, Incorporated, Murray Hill, N.J.
Filed Jul. 7, 1980, Ser. No. 166,486
Int. Cl.³ H03F *3/45, 3/16*
U.S. Cl. 330—253 **13 Claims**

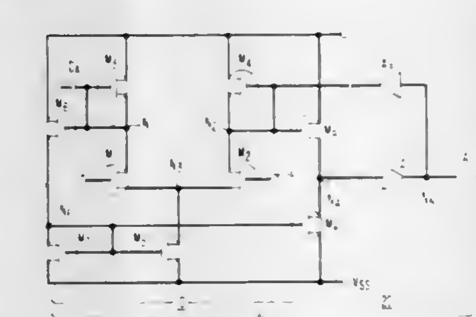

1. Semiconductor apparatus in MOS technology comprising a differential amplifier input stage (10) including a pair of substantially identical first and second mutually parallel branches (M_1M_3 and M_2M_4) having, respectively, first and second output nodes (N_1, N_2), said branches being connected through a common third node (N_3) to a controlled terminal of a common current-source transistor (M_5) for supplying current to both said branches, CHARACTERIZED IN THAT the first output node (N_1) of the first branch is directly connected to the gate electrode of a first auxiliary transistor (M_6) having one of its controlled terminals connected to a feedback node (N_F) which is connected both to the gate electrode of a first intermediate amplifier transistor (M_8) and to the gate electrode of said current-source transistor (M_5).

4,371,844
DIFFERENTIAL LOAD CIRCUIT EQUIPPED WITH FIELD-EFFECT TRANSISTORS
Wouter M. Boeke, Nijmegen, Netherlands, assignor to U.S. Philips Corporation, New York, N.Y.
Filed Feb. 5, 1981, Ser. No. 231,652
Claims priority, application Netherlands, Feb. 25, 1980, 8001120
Int. Cl.³ H03F *3/45*
U.S. Cl. 330—253 **16 Claims**

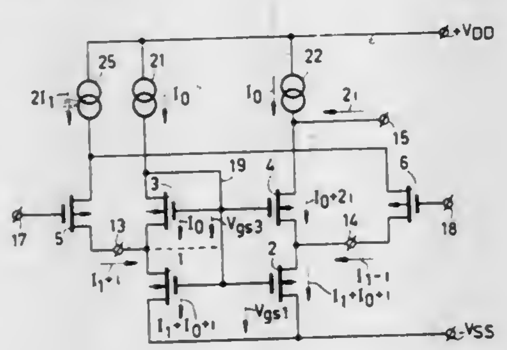

1. A differential load circuit equipped with field-effect transistors of the enhancement type comprises, first and second input terminals and a common terminal, a first and a second field-effect transistor of a first conductivity type having source electrodes connected to the common terminal, gate electrodes interconnected and drain electrodes connected to the first and second input terminals, respectively, a third and a fourth field effect transistor with interconnected gate electrodes, a first and a second current source circuit feeding quiescent currents to the third and the fourth transistor by connecting the drain electrodes of the third and the fourth transistor to the first and the second current source circuit, respectively, means connecting the source electrode of the third and the fourth transistor to the drain electrode of the first and the second transistor, respectively, and means connecting the gate electrodes of the third and fourth transistors to the gate electrodes of the first and the second transistor, at least one first output terminal connected to the drain electrode of the fourth transistor, and biasing means for biasing the gate electrodes of the first, second, third and fourth transistors to a potential such that the third and the fourth transistors carry the quiescent currents supplied by the current source circuits.

4,371,845
MODULAR MICROWAVE POWER DIVIDER-AMPLIFIER-COMBINER
Octavius Pitzalis, Jr., Pacific Palisades, Calif., assignor to Hughes Aircraft Company, Culver City, Calif.
Continuation-in-part of Ser. No. 152,470, May 23, 1980, abandoned. This application Jun. 15, 1981, Ser. No. 274,004
Int. Cl.³ H03F *3/16;* **H01P** *5/12*
U.S. Cl. 330—277 **25 Claims**

1. A power divider/combiner comprising:
(a) a power input/output port having first and second ends and including one or more coaxial transmission line impedance transforming sections;
(b) a microwave energy radial divider/combiner section comprising a plurality of microwave energy transmission lines connected to and symmetrically radiating from the second end of the power input/output port to the outer edge of the divider/combiner section, each microwave transmission line comprising a microstrip conductor extending from the second end of the the power input/output port to the outer edge of the divider/combiner section; and
(c) means for transmitting microwave energy between the first end of the power input/output port and the ends of the transmission lines at the outer edge of the divider/-combiner section, characterized in that the radial divider/combiner section includes an electrically conductive base surface, facing and fixably separated from the microstrip conductors, thereby forming a space between the microstrip conductors and the base surface, the space being filled with a dielectric medium, the distance of separation between the microstrip conductors and the base surface varying along the length of the transmission lines, such that an increasing impedance is attained from

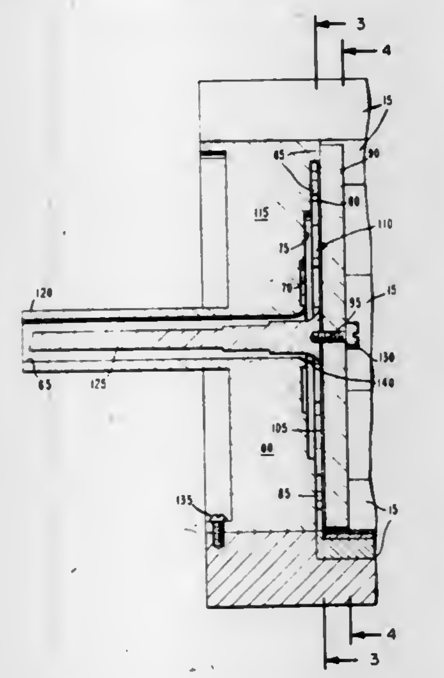

the outer edge to the second end of the power input/output port, and that the value of this increasing impedance, in conjunction with the value of the coaxial impedance transforming sections, is used to optimally match the impedance at the first end of the power input/output port with that at the ends of the transmission lines at the outer edge of the divider/combiner section.

4,371,846
BANDWIDTH CONTROL CIRCUITRY FOR RADAR I-F AMPLIFIER
Edward B. Gamble, Granada Hills, Calif., assignor to Sperry Corporation, New York, N.Y.
Filed Oct. 29, 1980, Ser. No. 201,825
Int. Cl.³ H03H *3/68;* **H03G** *3/30*
U.S. Cl. 330—278 **7 Claims**

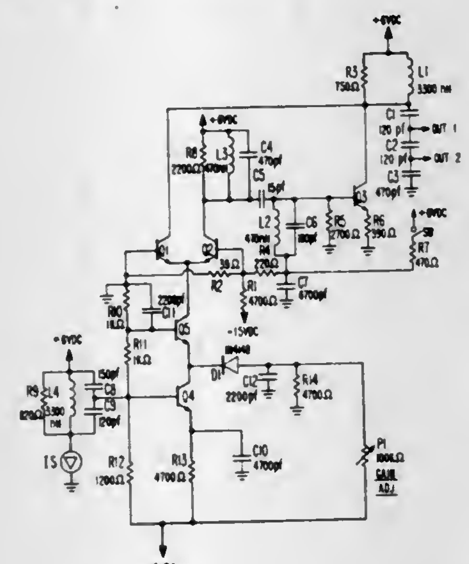

1. In a radar receiver intermediate-frequency amplifier a bandwidth control circuit comprising:
first and second transistors, each having base and emitter and collector electrodes;
a node at which the emitter electrodes of said first and second transistors connect;
means for applying a reference potential to the base electrode of one of said first and second transistors;
means for selectively applying one of first and second quiescent potentials to the base electrode of the other of said first and second transistors, said first and second quiescent potentials being of opposite polarities to each other as referred to said reference potential, for selecting the conduction of said first transistor for obtaining relatively wideband operation or for selecting conduction of said second transistor for obtaining relatively narrowband operation;
means for applying a unidirectional current with signal variations to said node, said unidirectional current of a polarity for implementing conduction by the selected one of said first and second transistors;
narrow-bandwidth filter means for receiving the collector current of said second transistor to respond with a narrow-bandwidth signal;
amplifier means for supplying from an output circuit thereof an output current exhibiting variations applied to an input circuit thereof responsive to said narrow-band signal; and
wide-bandwidth filter means for receiving whichever of the collector current of said first transistor and the output current of said amplifier means is supplied, to respond with a bandwidth-controlled output signal.

4,371,847
DATA TRANSMISSION LINK
James R. Biard, Richardson, and Ben R. Elmer, Plano, both of Tex., assignors to Spectronics, Inc., Richardson, Tex.
Division of Ser. No. 20,204, Mar. 13, 1979. This application Oct. 6, 1980, Ser. No. 194,124
Int. Cl.³ H03F *3/14*
U.S. Cl. 330—307 **3 Claims**

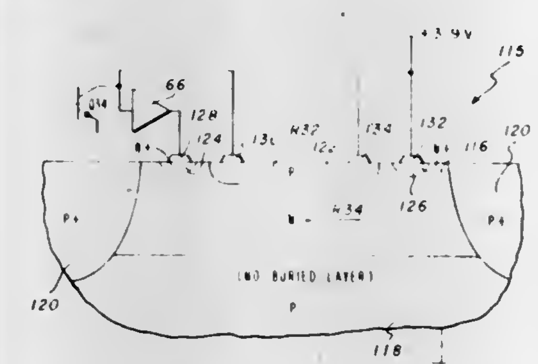

1. A method of altering the apparent electrical characteristics of a distributed electrical component in an integrated circuit, comprising in combination:
sinking the distributed electrical component into a second distributed electrical component which is substantially parallel to the distributed electrical component wherein the mutual distributed capacitance between the distributed electrical component and the parallel distributed electrical component is substantially greater than the distributed capacitance between the distributed electrical component and any other electrical component; and
driving the voltage across the parallel distributed electrical component by the voltage across the distributed electrical component by means of a follower circuit.

4,371,848
MAGNETRON HAVING A FILTER ON THE OUTPUT PROBE
Egbert B. G. W. Gotje, and Franciscus N. A. Kerstens, both of Eindhoven, Netherlands, assignors to U.S. Philips Corporation, New York, N.Y.
Filed Sep. 29, 1980, Ser. No. 191,541
Claims priority, application Netherlands, Oct. 15, 1979, 7907593
Int. Cl.³ H01J *23/32;* **H03B** *9/10*
U.S. Cl. 331—91 **5 Claims**

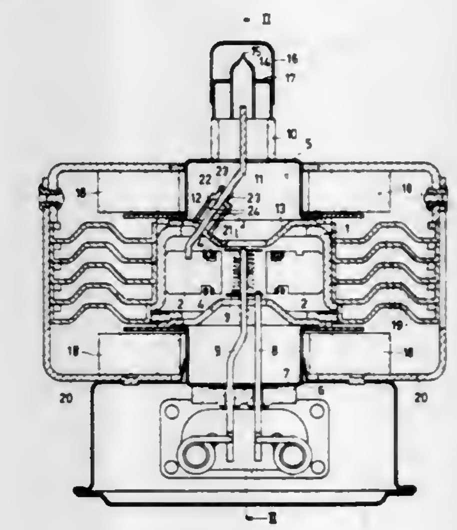

1. A magnetron comprising:
(a) an anode housing having vanes extending internally from an inner wall of the housing;
(b) a cathode;
(c) an output portion; and
(d) a probe connected to at least one of the anode vanes and extending into the output portion,
said probe including a filter for attenuating a frequency other than the fundamental frequency of the magnetron, said filter comprising at least one stub extending along one side of the probe and forming a slot having an effective length of approximately one quarter of the wavelength associated with frequency to be attenuated by the filter.

4,371,849
EVANESCENT-MODE MICROWAVE OSCILLATOR
Stuart R. Longley, Limpsfield, England, assignor to U.S. Philips Corporation, New York, N.Y.
Filed Mar. 19, 1980, Ser. No. 131,346
Claims priority, application United Kingdom, Mar. 19, 1979, 7909487
Int. Cl.³ H03B *5/18*
U.S. Cl. 331—96 **9 Claims**

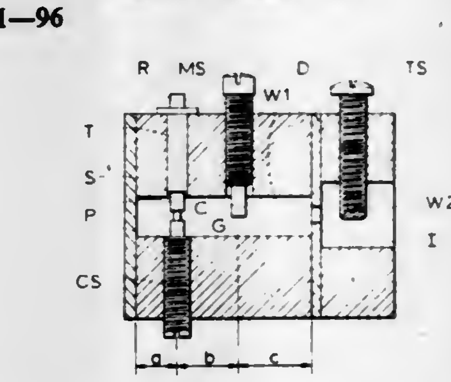

1. A microwave evanescent-mode oscillator comprising a length of rectangular waveguide having a cut-off frequency higher than the working frequency of the oscillator together with a Gunn element disposed within the waveguide characterised in that the oscillator comprises, spaced in sequence along the longitudinal axis of the waveguide, the Gunn element post-coupled into the waveguide and spaced from a first end of the waveguide, a capacitive member and at the opposite end of

the waveguide an end wall perpendicular to said longitudinal axis having therein an output aperture for coupling out energy at said working frequency from the waveguide.

4,371,850
HIGH ACCURACY DELTA MODULATOR
Stefan H. Klement, White Plains, N.Y., assignor to Honeywell Inc., Minneapolis, Minn.
Filed Dec. 12, 1980, Ser. No. 216,028
Int. Cl.[3] H03K *13/22*
U.S. Cl. 332—11 D **10 Claims**

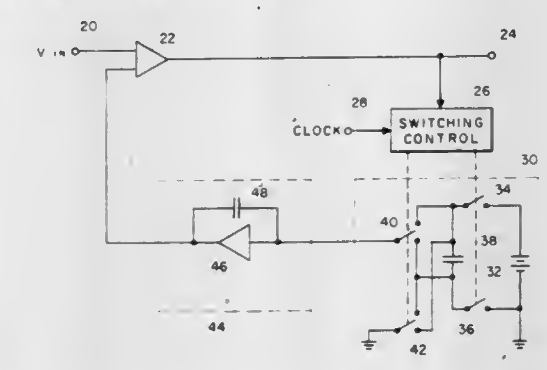

1. In a delta modulator having a comparator with a first and a second input terminal and an output terminal, an input signal applied to said first input terminal being compared with a quantized reference signal applied to said second input terminal to provide a digitized output signal on said output terminal, means for producing said quantized reference signal comprising:
a reference voltage source means;
a charge storage means selectively connected to said reference voltage source means to periodically charge said storage means;
a memory means;
means for periodically connecting said memory means to said charge storage means selectively in an additive or subtractive mode to algebraically sum the charge on said charge storage means with a charge on said memory means to provide said quantized reference signal at an output of said memory means;
control means connected between said output terminal of said comparator means and said charge storage means and said means for periodically connecting for operating said charge storage means and said means for periodically connecting in response to said digitized output signal; and
means connecting said output of said memory means to said second input terminal of said comparator.

4,371,851
RECEIVER PROTECTOR WITH MULTI-LEVEL STC ATTENUATION
Edward C. Niehenke, Elkridge; Gerald I. Klein, Baltimore, and Aldo E. Linsenbardt, Catonsville, all of Md., assignors to Westinghouse Electric Corp., Pittsburgh, Pa.
Filed Apr. 27, 1981, Ser. No. 258,094
Int. Cl.[3] H01P *1/22;* **G01S** *13/00*
U.S. Cl. 333—17 L **16 Claims**

1. A receiver protector stage of a radar for attenuating high power input signals, said stage including:
a semiconductor diode package having a base and a lid enclosure, said lid enclosure containing at least one semiconductor diode chip therein, a cathode of said diode being coupled electrically to said base and an anode of said diode being coupled electrically to said lid enclosure with a metallic conductor which exhibits significant inductive impedance at the microwave frequencies of the high power input signals being attenuated;
a metallic ground plane substrate having a well section contoured for supporting said semiconductor diode package substantially upright with base down within said substrate and with the top surface of said lid enclosure close to the level of the plane of the top surface of said substrate;
at least two dielectric microstrip transmission lines disposed on the top surface of said substrate and extending in different circuit paths from said well section;
a chip capacitor having one and another surfaces oppositely

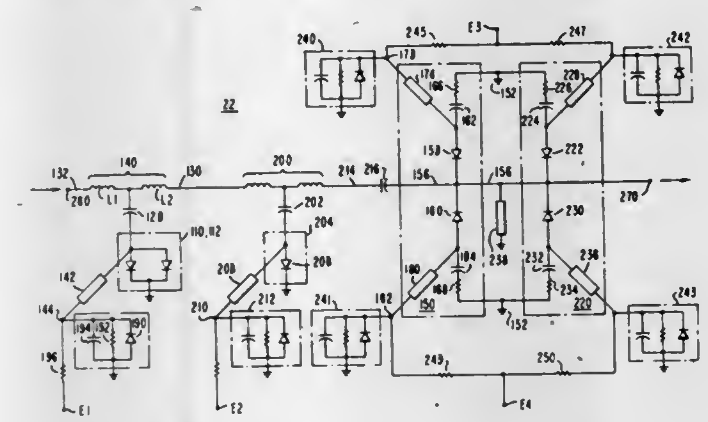

disposed, said chip capacitor being seated on the top surface of said lid enclosure with one surface of said chip capacitor in electrical contact with said lid enclosure top surface; and
a conductor section bridging said well section to make electrical contact between the another surface of said chip capacitor and said dielectric microstrip transmission paths extending from said well section.

4,371,852
VARIABLE PITCH DELAY LINE FOR TRAVELLING-WAVE TUBE AND TRAVELLING-WAVE TUBE EQUIPPED WITH SUCH A LINE
Christian Deville, and Philippe Lafuma, both of Paris, France, assignors to Thomson-CSF, Paris, France
Filed Jun. 27, 1980, Ser. No. 163,541
Claims priority, application France, Jul. 3, 1979, 79 17201
Int. Cl.[3] H01P *9/00;* **H01J** *23/24*
U.S. Cl. 333—157 **9 Claims**

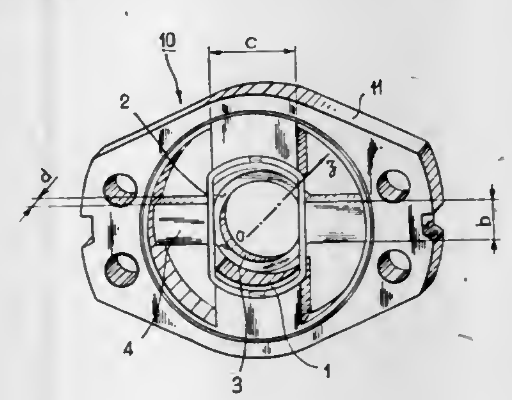

1. A variable pitch delay line for travelling wave tube constituted by cells each of which comprises the following arrangement of elements:
a metal waveguide portion having a hollow cross-section with an axis orthogonally directed with regard to the planes limiting said portion on either side and comprising tops or teeth which project from the periphery of the cross-section towards the centre of the same;
spaced from the tops, a coaxial metal ring fixed to the periphery of the cross-section by supporting rods facing the free spaces between the rods;
a conducting loop in contact with the tops and causing them to be short-circuited, said cells being stacked so as to constitute a wave guide of uniform cross-section in which the tops on the one hand and the supporting rods on the other hand are aligned with one another, an electron beam propagating in operation along the axis of the wave guide, wherein, for a given cross-section, the cells are varied along said axis by varying at least one of the dimensions in said arrangement, whereby the pitch, that is the distance between homologous points of two consecutive cells, is allowed to vary along said delay line.

4,371,853
STRIP-LINE RESONATOR AND A BAND PASS FILTER HAVING THE SAME
Mitsuo Makimoto, Yokohama, and Sadahiko Yamashita, Sagamihara, both of Japan, assignors to Matsushita Electric Industrial Company, Limited, Japan
Filed Oct. 29, 1980, Ser. No. 201,541
Claims priority, application Japan, Oct. 30, 1979, 54-140958; Dec. 17, 1979, 54-164428
Int. Cl.[3] H01P *1/203, 1/212, 7/08*
U.S. Cl. 333—204 **18 Claims**

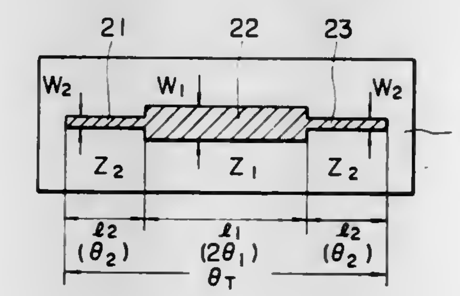

1. A strip-line resonator comprising:
(a) a substrate made of a dielectric;
(b) a ground-plane conductor attached to one surface of said substrate; and
(c) a strip-line conductor placed on the other surface of said substrate, said strip-line conductor being formed of first and second open-ended conductors and a center conductor interposed between said first and second open-ended conductors, the impedance of said center conductor being lower than the impedances of said first and second open-ended conductors.

4,371,854
BROADBAND HIGH-POWER MICROWAVE WINDOW ASSEMBLY
Seymour B. Cohn, Los Angeles; Arthur Karp, Palo Alto, and David S. Stone, Los Altos, all of Calif., assignors to Varian Associates, Inc., Palo Alto, Calif.
Filed Apr. 27, 1981, Ser. No. 258,065
Int. Cl.[3] H01P *1/08*
U.S. Cl. 333—252 **27 Claims**

1. A window assembly for a microwave waveguide including a hollow cross-section, comprising:
a plate of dielectric material of first refractive index n_1 extending across an interior hollow section of said waveguide and sealed to the interior of said section, said plate defining two opposed faces;
a fluid of second refractive index n_2 within a region of said waveguide interior on one side of said plate and in contact with one of said faces;
at least said one face having a pattern of corrugations across the area of said face, said corrugations each projecting an axial height h into said fluid, said height h being proportional to the geometric mean of the inverse of the product of the refractive indices n_1 and n_2;

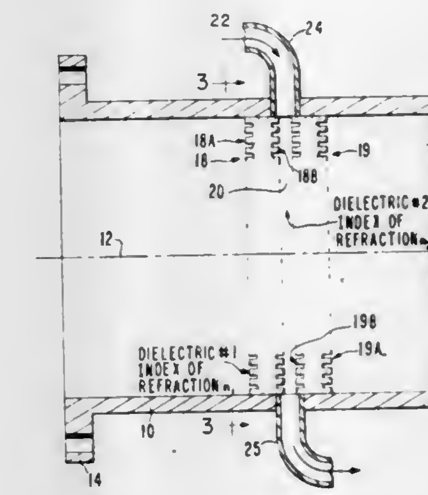

and means for circulating said fluid over said one face so as to cool said plate.

4,371,855
ELECTRICAL CONTACTOR
Richard S. Lenzing, Farmington, Conn., assignor to General Electric Company, New York, N.Y.
Filed Jan. 30, 1981, Ser. No. 230,166
Int. Cl.[3] H01H *50/02*
U.S. Cl. 335—132 **10 Claims**

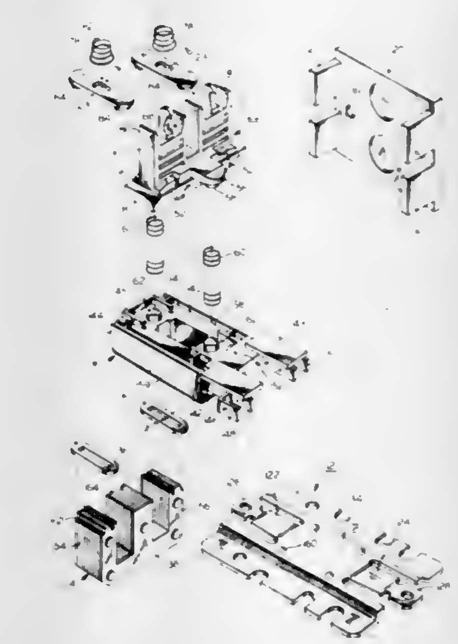

1. A contactor comprising in combination,
(a) a moveable contact carrier;
(b) an insulating member extending about said moveable contact carrier and comprising base portions and means for guiding longitudinal movement of said contact carrier;
(c) stationary contact means fixed on said insulating member;
(d) moveable contact means spring mounted at one end of said contact carrier and extending therefrom so as to be in juxtaposition with respective ones of said stationary contact means;
(e) armature means secured to the other end of said contact carrier and having a planar bottom surface;
(f) a stationary magnet member comprising leg members having a planar surface confronting said armature means;
(g) an operating coil retained on said magnet member;
(h) pole shading means seated on a plurality of said leg members so as to have flange portions extending transversely from said leg members;
(i) said insulating member comprising wall surfaces adapted

to abut against the flange portions of the pole shading means;

(j) a support member comprising a support surface for said stationary magnet member and resilient arms extending therefrom;

(k) means for fastening said resilient arm members to said base portions so that pressure exerted by said support member on said stationary magnet member clamps the flange portions of said pole shading means against the wall surfaces of the insulating member to rigidly retain said stationary magnet member, operating coil and pole shading means between said support member and said insulating member.

4,371,856

SWITCH ASSEMBLY INCLUDING CIRCUIT TEST POINTS

Thomas J. Holce, Portland, and Charles M. Huckins, Tigard, both of Oreg., assignors to Sentrol, Inc., Portland, Oreg.

Filed Sep. 22, 1980, Ser. No. 189,664

Int. Cl.³ H01H *9/02*

U.S. Cl. 335—202 **10 Claims**

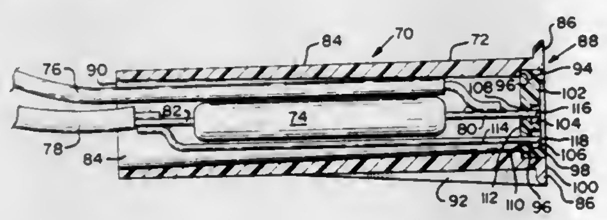

1. A housing for recessed mounting of an electrical circuit component such as an encapsulated magnetic reed switch, comprising:

(a) a tubular barrel having a first end adapted to be exposed flush with a mounting surface when said housing is mounted in a recessed position relative to said mounting surface and a second end adapted to be inserted into an opening through a surface with respect to which said housing is mounted in a recessed position;

(b) end closing means for closing said first end, said end closing means having an outer side and an inner side, said outer side thereof being aligned flush with said first end of said tubular barrel and including a recessed central portion;

(c) at least one orifice extending through said recessed central portion from said inner side to said outer side;

(d) a separate well defined within said recessed central portion surrounding each said orifice, each said well defining a space surrounding the respective orifice permitting insertion of an electrical test probe at least partially within said well; and

(e) said second end of said barrel being open.

4,371,857

ELECTROMAGNETICALLY OPERABLE RAM ACTUATOR IN PARTICULAR FOR IMPACT PRINTERS

Armin Bohg, Weil im Schönbuch, and Kurt Hartmann, Calw-Heumaden, both of Fed. Rep. of Germany, assignors to International Business Machines Corporation, Armonk, N.Y.

Filed May 7, 1981, Ser. No. 261,312

Claims priority, application Fed. Rep. of Germany, May 14, 1980, 3018407

Int. Cl.³ H01F *3/00, 7/08*

U.S. Cl. 335—259 **5 Claims**

1. An electromagnetic actuator unit assembly comprising a thin, flat, rectangular frame having a central recess,

a ram actuator carried by said frame comprising

a cylindrical ram shaft slidably supported within guide holes through opposite sides of said frame,

said ram shaft having a central portion within said recess with opposite end portions extending beyond said opposite sides of said frame, and

a ram head fixed to one of said end portions outside of said frame,

said ram shaft having a plurality of longitudinally separated magnetic armature disks in said central portion, and

electromagnetic operating means supported by said frame within said recess for actuating said ram actuator in an axial direction,

said operating means comprising upper and lower co-acting electromagnetic stator members,

said stator members comprising magnetic core means having

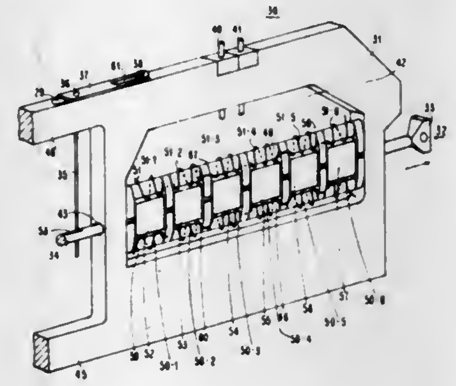

a plurality of longitudinally spaced magnetic pole pieces and an excitation winding on at least one of said core means,

said magnetic pole pieces of said stator members having opposite pole faces aligned and shaped to form a plurality of longitudinally separated circular operating gaps for receiving one each of said armature disks in said central portion of said actuator shaft, and means supported by said frame member for biasing said ram actuator to a starting position whereby in the non-energized state of said excitation winding said armature disks are positioned in front of their operating gaps and are pulled into said operating gaps upon energization of said winding.

4,371,858

STATIC INDUCTION APPARATUS

Minoru Kanoi, Tokai, and Yasuro Hori, Ibaraki, both of Japan, assignors to Hitachi, Ltd., Tokyo, Japan

Filed Dec. 18, 1980, Ser. No. 217,772

Claims priority, application Japan, Dec. 18, 1979, 54-163476

Int. Cl.³ H01F *15/00*

U.S. Cl. 336—100 **13 Claims**

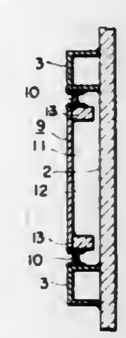

1. A static induction apparatus having:

(a) an oil tank which receives therein a main device of the static induction apparatus,

(b) a plurality of reinforcing channels which are disposed on a side plate of the oil tank, and

(c) a sound insulation panel which is carried on the reinforcing channels by a respective elastic body which is mounted to the periphery of the panel, characterized by comprising:

(d) a looped weight beam which is disposed only near the periphery of said sound insulation panel to which each elastic body is mounted so that the portion of said panel near the periphery is made greater in weight than the weight of the remaining portion of said sound insulation panel located centrally thereof.

4,371,859

COIL SPRING BIASED CURRENT LIMITER

Mitsuo Sorimachi, Isesaki, Japan, assignor to Hosiden Electronics Co., Ltd., Osaka, Japan

Filed Jul. 8, 1981, Ser. No. 281,431

Claims priority, application Japan, Aug. 22, 1980, 55-118850[U]

Int. Cl.³ H01H *37/54, 37/74*

U.S. Cl. 337—365 **9 Claims**

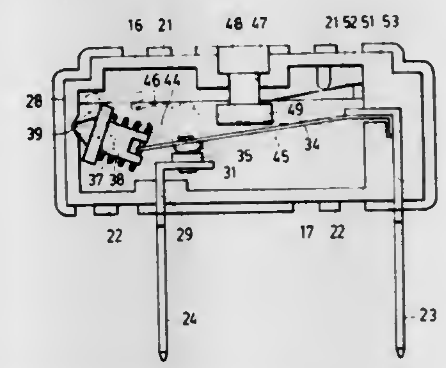

1. A current limiter comprising:

(a) a casing made of an insulating material;

(b) a first fixed terminal mounted in said casing and having one end projecting out of the casing;

(c) a plate-like bimetal housed in said casing and having one end secured to said first fixed terminal, said bimetal supporting a movable contact;

(d) a coil spring having one end held in engagement with the distal end of said bimetal and positioned substantially in alignment with the bimetal, said distal end of the bimetal having an engagement tongue of a reduced width with shoulders on each side thereof, said engagement tongue being inserted in said coil spring with said shoulders held against said one end of the coil spring;

(e) a pivotable lever pivotably supported in said casing and disposed in said coil spring in engagement with the other end of the coil spring, said pivotable lever being fitted substantially in said coil spring to prevent the axis of the coil spring from becoming deflected, said coil spring urging said bimetal toward said one end thereof and said pivotable lever against said casing; and

(f) a second fixed terminal mounted in said casing and having one end projecting out of the casing, said second fixed terminal supporting a fixed contact, said movable contact on the bimetal being normally held against said fixed contact on the second fixed terminal under the bias of said coil spring.

4,371,860

SOLDERABLE VARISTOR

John E. May, Skaneateles, and Steven R. Zohler, North Syracuse, both of N.Y., assignors to General Electric Company, Syracuse, N.Y.

Continuation of Ser. No. 49,223, Jun. 18, 1979, abandoned. This application Dec. 28, 1981, Ser. No. 334,627

Int. Cl.³ H01C *7/12*

U.S. Cl. 338—21 **1 Claim**

1. A metal oxide varistor having low leakage comprising:

a body consisting essentially of metal oxide and at least one additive;

first and second spaced apart electrodes applied directly to said body;

a protective layer of polyimide silicone on the surface of said body between said electrodes and covering the edges of said electrodes, said layer being resistant to solder and solder-borne contaminants and having respective openings therein exposing and defining a solder attachment region on the surface of each of said electrodes;

each of said electrodes having on its exposed surface a respective layer of solder;

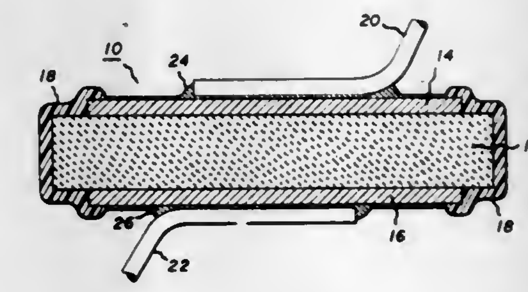

and first and second electrically conductive leads connected respectively to said first and second electrodes by said respective layers of solder.

4,371,861

NI-FE THIN-FILM TEMPERATURE SENSOR

Mona Abdelrahman, Minnetonka; Ralph W. Fuchs, Cold Spring; James O. Holman, Minnetonka; Robert G. Johnson, Minnetonka, and M. Walter Scott, Minnetonka, all of Minn., assignors to Honeywell Inc., Minneapolis, Minn.

Filed Dec. 11, 1980, Ser. No. 215,216

Int. Cl.³ H01C *3/04*

U.S. Cl. 338—25 **12 Claims**

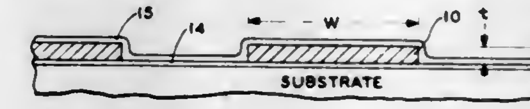

1. A temperature sensing element comprising:

an insulating substrate;

an isolating layer on the surface of said substrate;

a long narrow thin film resistive path of NiFe deposited on the surface of said isolating layer, said resistive path having a narrow width of less than about 15 μm and said resistive path having a thickness in excess of about 400 A°, said NiFe path having a desired temperature coefficient of resistance and by reason of said narrow width and said deposition thickness being relatively insensitive to magnetic field intensity; and,

a passivating layer overlaying the resistive material.

4,371,862

VARIABLE RESISTANCE CONTROL

Ellis P. Lipp, and Jay Utken, both of Frankfort, Ind., assignors to Emhart Industries, Inc., Indianapolis, Ind.

Filed Aug. 3, 1981, Ser. No. 289,251

Int. Cl.³ H01C *10/34*

U.S. Cl. 338—174 **10 Claims**

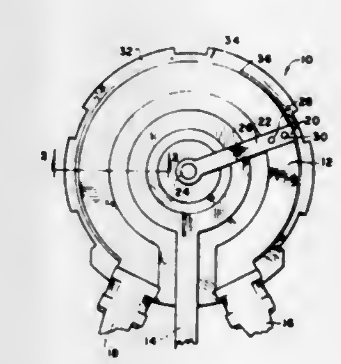

1. In a variable resistance control wherein there is an electri-

cal resistance path and an electrical conductive strip and wherein movable electrical contact means electrically bridge the resistance path and the electrical conductive strip, the improvement comprising:

providing a backing means for said resistance path, said backing means consisting essentially of a porcelain enamel metal strip.

4,371,863

TRAFFIC-ACTUATED CONTROL SYSTEMS PROVIDING AN ADVANCE SIGNAL TO INDICATE WHEN THE DIRECTION OF TRAFFIC WILL CHANGE

George H. Fritzinger, 15 Standish Ave., West Orange, N.J. 07052

Continuation-in-part of Ser. No. 905,350, May 12, 1978, Pat. No. 4,200,860, which is a continuation-in-part of Ser. No. 681,539, Apr. 29, 1976, abandoned. This application Oct. 22, 1979, Ser. No. 87,583

Int. Cl.³ G08G *1/096, 1/07*

U.S. Cl. 340—43 7 Claims

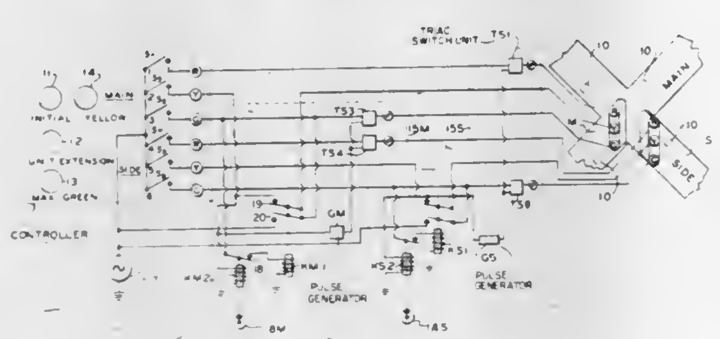

1. The method of controlling the green and red traffic lights of a traffic system having a traffic-actuated controller and red, green and yellow lights on each roadway of an intersection, to provide an advance signal at a predetermined fixed interval before the direction of traffic will change, which comprises momentarily blinking the red and green lights on the respective roadways at the same instant and concurrently cutting off the traffic actuation of said controller at the start of said interval while continuing the green and red lights on said roadways, terminating the green light at a preset time after the blinking signal and concurrently starting the yellow light on the same roadway, and restoring traffic actuation to said controller when the yellow light times out.

4,371,864

DIGITAL DISPLAY DEVICE OF VEHICLE USE

Teruo Kawasaki, Yokohama; Hiroyuki Nomura, Fujisawa, and Mikio Takeuchi, Yokohama, all of Japan, assignors to Nissan Motor Co., Ltd., Yokohama, Japan

Filed Aug. 14, 1980, Ser. No. 178,007

Claims priority, application Japan, Aug. 24, 1979, 54-107182

Int. Cl.³ B60Q *1/54;* B60R *21/00*

U.S. Cl. 340—62 8 Claims

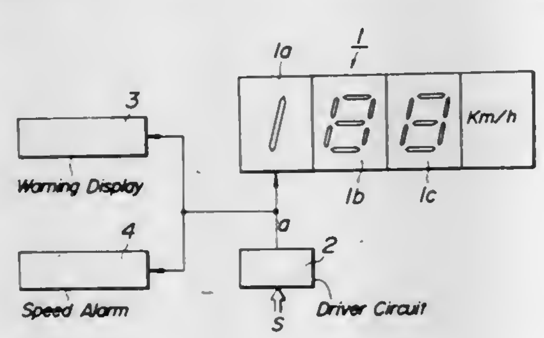

1. A digital device for a vehicle for indicating basic information related to the vehicle, including indicating the speed of the vehicle, and provided with a function to control vehicle mounted electrical devices including a speed alarm based on said basic information of the vehicle, the device comprising in combination:

a digital speedometer having indicating portions for respective decimal digits of which each indicating portion comprises at least one segment for visually defining the shape of one or more decimal numbers in a decimal digit, and

a driver circuit associated with each of said indicating portions for sending control signals for turning on the respective segments to provide a digital display of the speed of the vehicle, said driver circuit including means supplying on one control wire leading from said driver circuit a unitary control signal to a particular segment to turn on said particular segment when the speed of said vehicle exceeds a certain limit, and including circuit means branching said unitary control signal and supplying the branched unitary control signal to said speed alarm to activate said speed alarm whenever said unitary control signal is supplied on said one wire to turn on said particular segment.

4,371,865

METHOD FOR ANALYZING STORED IMAGE DETAILS

Clifford H. Moulton, Portland, Oreg., assignor to Palmguard, Inc., Beaverton, Oreg.

Filed Jul. 3, 1980, Ser. No. 165,603

Int. Cl.³ G06K *9/46*

U.S. Cl. 340—146.3 MA 9 Claims

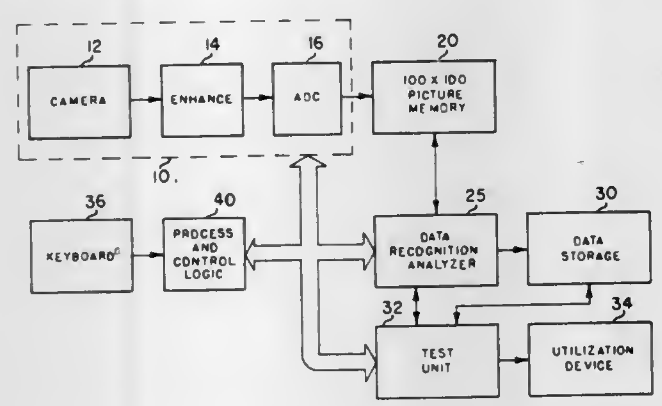

1. A method of recognizing an image to provide identification thereof, comprising the steps of:

storing said image in a picture storage device comprising an array of addressable picture elements each containing numerical data corresponding to levels of light;

electronically selecting one or more three-dimensional slopes between selected pairs of addressable fixed locations by subtracting numerical data stored in one or more picture elements at a first fixed location from numerical data stored in one or more picture elements at a second fixed location;

comparing said selected slopes with stored slopes previously selected from substantially the same locations of a prior image to determine a correlation therebetween; and

providing an identification of recognition based upon the degree of correlation between said selected slopes and said stored slopes.

4,371,866

REAL-TIME TRANSFORMATION OF INCOHERENT LIGHT IMAGES TO EDGE-ENHANCED DARKFIELD REPRESENTATION FOR CROSS-CORRELATION APPLICATIONS

James L. Smith, Grand Prairie, Tex., assignor to The United States of America as represented by the Secretary of the Army, Washington, D.C.

Filed Nov. 21, 1980, Ser. No. 208,961

Int. Cl.³ G06K *9/58*

U.S. Cl. 340—146.3 F 8 Claims

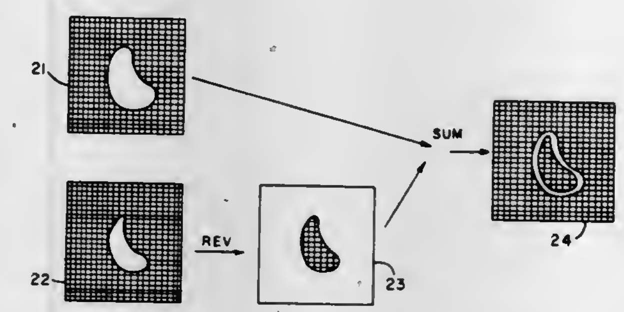

1. A system for providing an edge-enhanced representation of an object comprising a lens means having a focus plane; a recording means located between the focus plane and said lens means so as to receive light reflected from the object and focused through said lens means; a dual-aperture means located between the light from said object and said lens means so as to alternately aperture the lens with a perimeter stop which blocks off the outer lens region and with a central stop which blocks off the central region of said lens means; and said recording means combining the image received from said perimeter stop with an image received from said central stop as to produce an edge-enhanced representation of the object.

4,371,867

TRANSMITTING SIGNALS OVER ALTERNATING CURRENT POWER NETWORKS

Jean-Gabriel Gander, Zug, Switzerland, assignor to LGZ Landis & Gyr Zug AG, Zug, Switzerland

Continuation of Ser. No. 863,468, Dec. 22, 1977, abandoned. This application Oct. 1, 1980, Ser. No. 192,827

Claims priority, application Switzerland, Aug. 25, 1977, 10387/77

Int. Cl.³ H04B *3/54*

U.S. Cl. 340—310 R 14 Claims

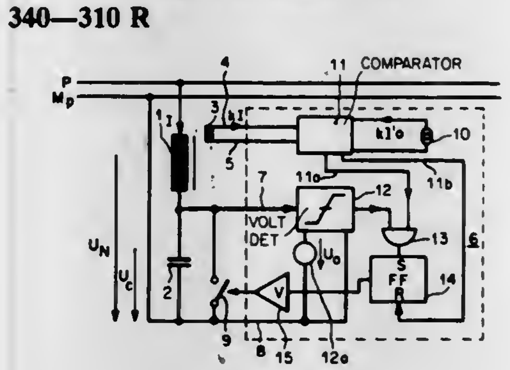

1. A method of producing intelligence signals for transmission over the lines of an alternating current power supply network in response to an input reference signal comprising:

connecting a resonant circuit including a capacitive device to the lines of the power supply network;

controlling the charging and discharging of said capacitive device from the power supply network;

said charging and discharging of said capacitive device being controlled in response to intelligence to be transmitted to periodically charge said capacitive device so that said resonant circuit produces an intelligence signal for transmission over the power supply network; and

wherein said control is effected in dependence on a comparison of the current flowing through said resonant circuit and the reference signal.

4,371,868

METHOD AND DEVICE FOR THE AUTOMATIC CALIBRATION OF AN ANALOG-TO-DIGITAL CONVERTER

Robert E. J. Van de Grift; Rudy J. Van de Plassche, and Eise C. Dijkmans, all of Eindhoven, Netherlands, assignors to U.S. Philips Corporation, New York, N.Y.

Continuation of Ser. No. 954,260, Oct. 24, 1978, abandoned. This application Sep. 2, 1980, Ser. No. 183,523

Claims priority, application Netherlands, Aug. 11, 1977, 7712273

Int. Cl.³ H03K *13/20*

U.S. Cl. 340—347 CC 3 Claims

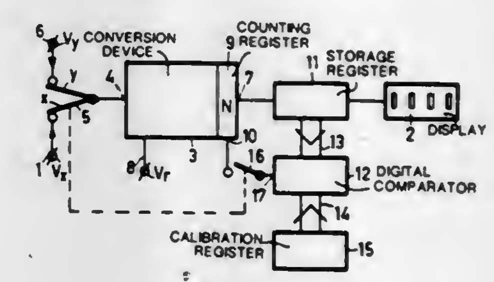

1. An analog-to-digital converter with automatic calibration having an analog frequency converter, a gate circuit, a timer comprising a counting register, a clock, and a pulse counter which supplies the digital output signal after counting the number of pulses from said analog frequency converter during the time interval defined by said timer, characterized in that:

in the calibration mode a digital filter circuit is connected between the output of the frequency converter and the input of the pulse counter of said converter after each calibration measurement the digital difference signal is applied to a buffer register, which is connected to the counting register for adjusting the total counting capacity.

4,371,869

FENCE OR WALL INCORPORATING FIBRE-OPTIC WAVE-GUIDE

Roderick I. Davidson, Paris, France, assignor to Fibun B.V., Netherlands

Continuation of Ser. No. 943,693, Sep. 19, 1978, Pat. No. 4,275,294. This application Jan. 7, 1981, Ser. No. 223,134

Claims priority, application United Kingdom, Sep. 28, 1977, 40412/77; May 31, 1978, 40412/77

The portion of the term of this patent subsequent to Jun. 23, 1998, has been disclaimed.

Int. Cl.³ G08B *13/18*

U.S. Cl. 340—557 6 Claims

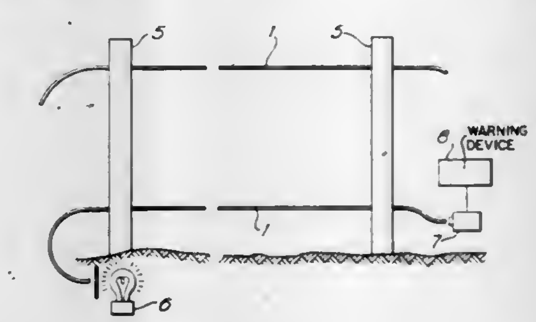

1. A fence or wall comprising a series of supports defining a boundary, a plurality of strands extending between the supports, at least one of the strands containing a fibre-optic wave-guide, means for transmitting light into one end of each fibre-optic wave-guide, means for receiving light emanating from

the other end of each fibre-optic wave-guide, and an alarm device responsive to a change in the light received from any fibre-optic wave-guide.

4,371,870

FAIL TRANSPARENT LCD DISPLAY WITH BACKUP

Michael A. Biferno, Duarte, Calif., assignor to McDonnell Douglas Corporation, Long Beach, Calif.

Filed Sep. 2, 1980, Ser. No. 183,346

Int. Cl.^{3} G09G *3/36*

U.S. Cl. 340—716 **8 Claims**

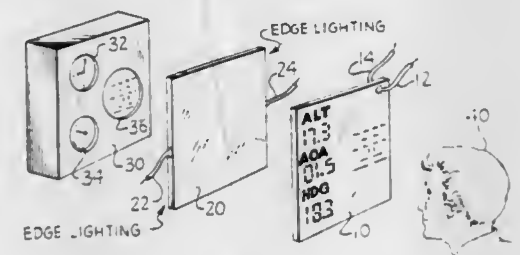

1. A display system comprising:

a primary liquid crystal display comprising a first liquid crystal display means located closest to a viewer wherein information is presented to the viewer within an at least one information location on the first display means, and a second liquid crystal display means located an effective distance behind the first display means wherein substantially all of the second liquid crystal display means operates in a reflective mode; and

a secondary display wherein the secondary display is located directly behind the primary display such that, upon a termination of power to the primary display, the primary display becomes substantially transparent and the secondary display then becomes visible to the viewer.

4,371,871

ALERT MESSAGE COMMUNICATION SYSTEM

John H. Adams, Dorking, England, assignor to Reuters Limited, London, England

Filed Jan. 30, 1981, Ser. No. 230,412

Int. Cl.^{3} G09G *1/00*

U.S. Cl. 340—717 **20 Claims**

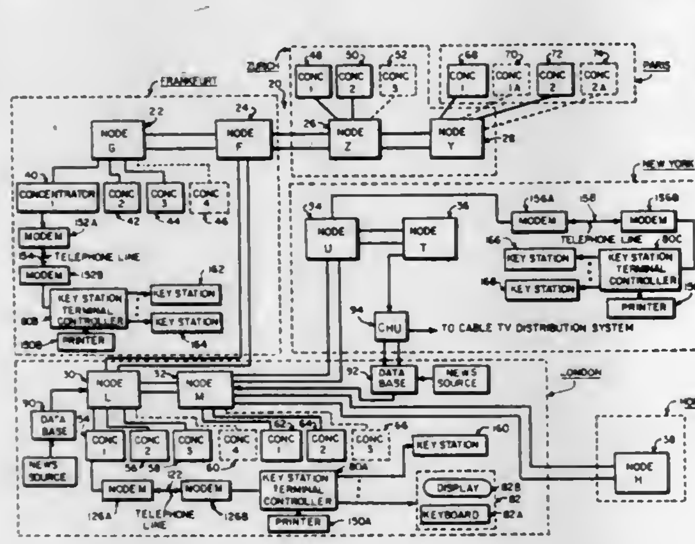

1. In a communication network capable of providing textual data messages to a plurality of subscriber terminals throughout the said network, at least a portion of said plurality of subscriber terminals comprising keystations, each of said keystations comprising a keyboard means for requesting and inputting textual data messages and associated data control signals and display means for providing a textual display of said keyboard generated data input; the improvement comprising a plurality of message switching node interface means operatively connected to each other at different geographic locations throughout the network and a plurality of keystation controller interface means with at least one keystation being operatively connected to one of said keystation controller interface means for each of said message switching node interface means, each of said message switching node interface means comprising message routing logic means and local storage means operatively connected to said message routing local control means for providing message routing logic control signals thereto, each of said keystation controller interface means comprising display control logic means and local display storage means for locally storing textual data to be displayed on said one connected keystation display means, said one connected keystation keyboard means comprising means for inputting a plurality of selectable message routing logic control signals to said node interface local storage means for creating a locally stored alert message routing control page comprising a plurality of different selectable message routing logic control signals, each of said keystation controller interface means having a unique address message code in said network corresponding to a unique logic control signal, each of said different locally stored alert message routing logic control signals comprising at least one of said controller interface unique address code logic control signals, different sets of said controller interface unique address code logic control signals comprising said different selectable message routing logic control signals, each of said one connected keystation keyboard means further comprising means for providing an original textual data alert message and selection control signal to said keystation controller interface means for selecting at least one of said different alert message routing logic control signals for uniquely defining a keystation recipient group for said original input textual data alert message, said keystation controller interface means comprising logic means responsive to said provided textual data alert message and selection control signals for providing said textual data alert message and selection control signal to said node interface means message routing logic means associated with said original message providing keystation, said message switching node interface logic means being responsive to said selection control signal for selecting said at least one corresponding locally stored alert message routing logic signal and for transmitting said one selected alert message routing logic signal and said original textual data alert message to at least a keystation recipient group plurality of node interface means corresponding to said controller interface unique address code logic control signals comprised in said selected alert message routing logic control signal, said keystation recipient group node interface logic means selectively routing said received textual data alert message to said connected keystation controller interface means corresponding to said node interface associated controller interface unique address code logic control signals defined in said keystation recipient group, said associated keystation controller interface means locally storing said received alert message in said local display storage means for providing a display thereof on said one connected keystation display means in said selected keystation recipient group, said message originating keystation keyboard means being capable of varying both the content of said textual data alert message to be transmitted and the recipients for said transmitted alert message by varying either the contents of said locally stored alert message routing control page or the alert message routing logic control signal selected; whereby any of said keystations in the network can rapidly disseminate individually tailored alert messages to individually tailored recipients therefor for display thereof.

4,371,872

FRACTIONAL CLOCK EDGE SMOOTHER FOR A REAL-TIME SIMULATION OF A POLYGON FACE OBJECT SYSTEM

Walter A. Rossman, Cupertino, Calif., assignor to The Singer Company, Binghamton, N.Y.

Filed Jul. 23, 1979, Ser. No. 59,819

Int. Cl.^{3} G09G *1/16*

U.S. Cl. 340—728 **6 Claims**

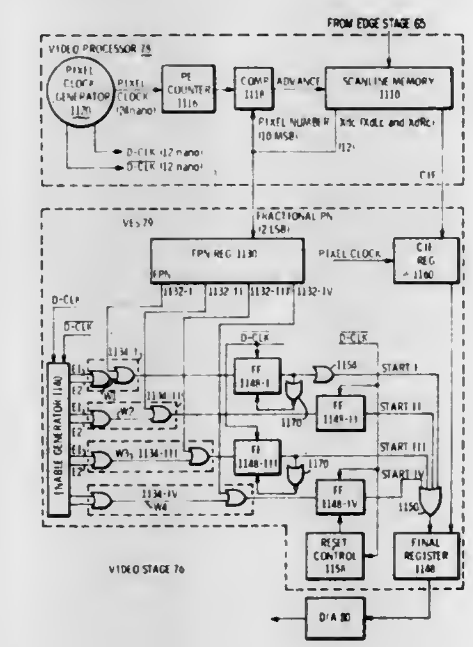

1. An image data system responsive to digital image data including position data which defines the position of the vertices of polygon faces forming the image, and corresponding visual data which defines the visual characteristics of each face, for providing digital display data to a scanline-pixel type display device, comprising:

image processor means for receiving the image position data and providing the display coordinates for each vertex of each polygon face of the image to be displayed on the display device;

means responsive to the display coordinates of each vertex for determining the scanline numbers and pixel numbers within each scanline of the sequence of leading and trailing intersections of the edges of each face with the scanlines, and responsive to the corresponding visual data for providing a video signal to the display device along each scanline between the leading and trailing edge intersections of each face for generating the corresponding visual characteristics for that face on the display device;

scanline memory for receiving each scanline number and the pixel numbers of each intersection within that scanline and the corresponding visual data, and for sequentially providing each intersection pixel number and corresponding data by order of scanline and pixel;

pixel clock for the scanlines;

pixel counter for sequentially incrementing in response to the pixel clock to define the current pixel count as each scanline proceeds;

comparator means for comparing the most significant bit portion of the current intersection pixel number with the current pixel count to advance the corresponding visual data out of the scanline memory;

fractional pixel means responsive to the least significant bit portion of the current intersection pixel number for providing a series of progressively and non-uniformly delayed display start times within the current pixel for controlling the display of the corresponding visual data.

4,371,873

CLUTTER FREE SYNTHETIC APERTURE RADAR CORRELATOR

Robert A. Frosch, Administrator of the National Aeronautics and Space Administration, with respect to an invention of, and Atul Jain, Pasadena, Calif.

Filed Dec. 8, 1977, Ser. No. 858,767

Int. Cl.^{3} G01S *13/89, 13/90*

U.S. Cl. 343—9 PS **6 Claims**

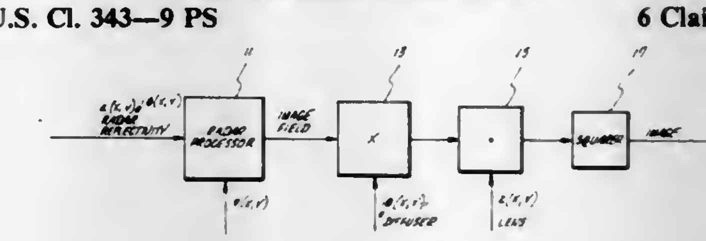

1. A radar processing system supplied with terrain reflectivity and radar impulse response indications comprising:

a radar processor means for providing a radar image field plane;

a moving diffuser located at the image field plane of said radar processor and providing an output image; and

a lens means having an impulse response at least as wide as the impulse response of the radar system, for reimaging said output image.

4,371,874

CHAFF DIPOLE ELEMENTS AND METHOD OF PACKAGING

Richard L. Bloom, Greenbelt, Md., assignor to The United States of America as represented by the Secretary of the Navy, Washington, D.C.

Filed Oct. 5, 1973, Ser. No. 401,933

Int. Cl.^{3} G01S *7/38*

U.S. Cl. 343—18 B **7 Claims**

3. A mixture of a plurality of different type electromagnetic radiation relfective metal, chaff dipole elements for packaging into a dispenser for chaff dispersion;

each different type element formed by a different type of metal with the same length and cross sectional area, but of different weight,

whereby each different type metal dipole element has a different fall rate when simultaneously dispensed.

4,371,875

PROJECTILE ANTENNA

Wolfgang Keydel, Ulm, Fed. Rep. of Germany, assignor to Licentia Patent-Verwaltungs-GmbH, Frankfurt am Main, Fed. Rep. of Germany

Filed Oct. 20, 1975, Ser. No. 623,557

Claims priority, application Fed. Rep. of Germany, Oct. 22, 1974, 2450063

Int. Cl.^{3} H01Q *1/28*

U.S. Cl. 343—708 **5 Claims**

1. An antenna for an electronic projectile detonator, with the antenna producing a desired antenna diagram which is rotationally symmetrical about the longitudinal axis of the projectile, said antenna comprising: a dipole which is fed through a coaxial feeder line and decoupled from said feeder line by means of a $\lambda/4$ wave trap (λ= operating wavelength), said dipole and said wave trap being realized by a frustoconical widened portion of a $\lambda/4$ extension of the inner conductor of the feeder line which coincides, as regards position and direction, with the longitudinal axis of the projectile at the feed point, said widened portion constituting the detonator head in the tip of the projectile, and a $\lambda/4$ conductive sleeve which is

rotationally symmetrical to the longitudinal axis of the projectile and surrounds said coaxial feeder line, and is connected to

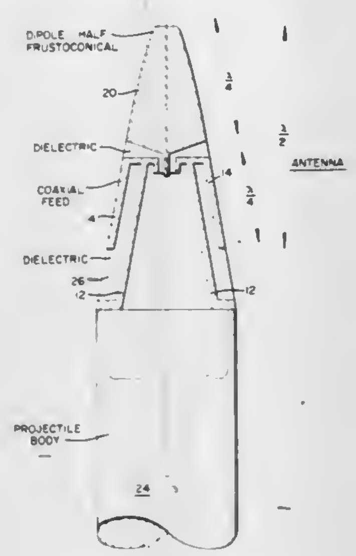

the outer conductor of said coaxial feeder line only at said feed point of said antenna.

4,371,876

SLOT ARRAY ANTENNA HAVING A COMPLEX IMPEDANCE TERMINATION AND METHOD OF FABRICATION

Johnny R. Nash, Phoenix, Ariz., assignor to Motorola Inc., Schaumburg, Ill.

Continuation of Ser. No. 902,629, May 4, 1978, abandoned. This application Jul. 17, 1979, Ser. No. 58,411

Int. Cl.³ H01Q ***13/10***

U.S. Cl. 343—768 **6 Claims**

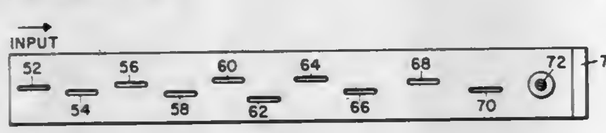

1. A slot array antenna having a predetermined required pattern, comprising:

(a) a portion of a waveguide having an input end and a termination end;

(b) a plurality of slots disposed in said waveguide, each adjacent pair of said slots being longitudinally and variably spaced one from the other by distances responsive to the required array antenna pattern; and

(c) termination means for providing a reflection coefficient of substantially less than unity and substantially greater than zero, said termination means being in said termination end of said waveguide and having a complex impedance equal to a quotient of termination end voltage divided by termination end current as derived from said spacing of said plurality of slots.

4,371,877

THIN-STRUCTURE AERIAL

Michel Doussot, Fontenay Aux Roses, and Christian Courtois, Briis sous Forge, both of France, assignors to U.S. Philips Corporation, New York, N.Y.

Filed Apr. 22, 1981, Ser. No. 256,349

Claims priority, application France, Apr. 23, 1980, 80 09070

Int. Cl.³ H01Q ***13/10***

U.S. Cl. 343—770 **7 Claims**

1. An aerial comprising a sheet of dielectric having front and rear surfaces each covered with a layer of conductive material, the conductive layer on the front surface including:

(a) at least one radiating slot;

(b) at least one feed slot parallel to a radiating slot;

(c) a conductive portion bounded by at least two of the slots in the layer;

(d) a feed point in said conductive portion; and

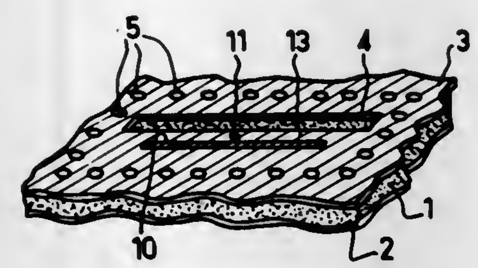

(e) means for defining sidewalls of a cavity which is disposed between said layers of conductive material, said side walls surrounding at least one radiating slot and said parallel feed slot.

4,371,878

DEVICE FOR CORRECTING INK DOT MISPLACEMENT IN INK-JET PRINTING

Koichiro Jinnai, Kawasaki, Japan, assignor to Ricoh Co., Ltd., Tokyo, Japan

Filed Mar. 11, 1981, Ser. No. 242,575

Claims priority, application Japan, Mar. 17, 1980, 55-33789

Int. Cl.³ G01D ***15/18***

U.S. Cl. 346—75 **4 Claims**

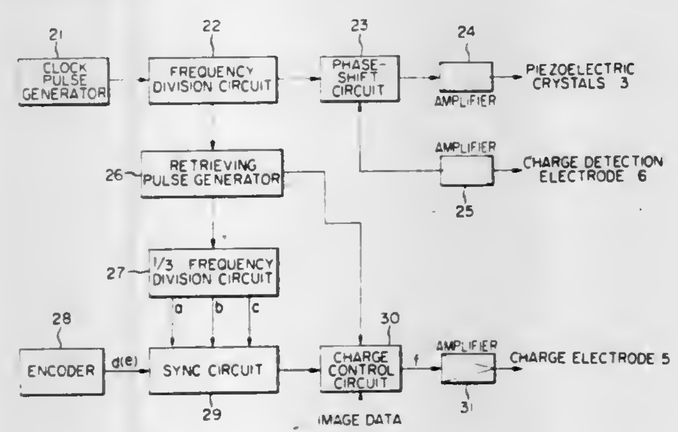

1. An electrostatic type ink-jet printer of the type leaving guard drops between charged drops, comprising:

a rotary drum for supporting a record medium;

an ink jet generator adjacent said drum for providing a stream of ink drops, in response to a corresponding excitation signal;

first pulse generating means for providing said excitation signal at a given frequency;

frequency dividing means for generating polyphase pulse trains synchronous with said excitation signal at a submultiple of said given frequency;

sync pulse generating means coupled to said rotary drum for providing sync pulses at predetermined rotational positions thereof;

a sync circuit responsive to said polyphase pulse trains and said sync pulses for providing charging pulses corresponding to that one of said polyphase pulse trains which contains a pulse coincident with a predetermined part of each of said sync pulses; and

means responsive to said charging pulses for charging corresponding ones of said ink drops in said stream provided by said ink drop generator, to charge each ink drop which immediately succeeds a corresponding one of said sync pulses.

4,371,879

METALIZED RECORDING CARRIER FOR RECORDING INSTRUMENTS, AND METHOD OF ITS MANUFACTURE

Richard Höhn, Stuttgart; Werner Jung, Waiblingen; Gerhard Winter, Remshalden, and Siegfried Woerner, Stuttgart, all of Fed. Rep. of Germany, assignors to Robert Bosch, GmbH, Stuttgart, Fed. Rep. of Germany

Filed May 7, 1981, Ser. No. 261,611

Claims priority, application Fed. Rep. of Germany, May 7, 1980, 3017450

Int. Cl.³ G01D ***15/24***

U.S. Cl. 346—135.1 **19 Claims**

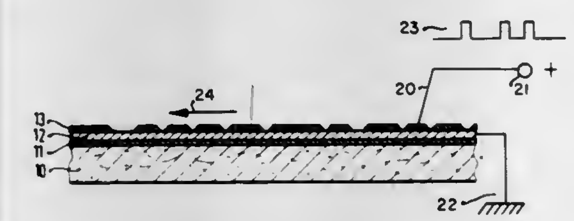

1. Metalized recording medium for recording instruments of the burn-out recording type upon being subjected to an electrical discharge from an electrode (20) having a contacting surface which is being passed over the surface of the medium, comprising

a substrate carrier (10);

a metal layer (12) supported by the carrier and of a thickness permitting burning-off of the metal layer when positioned beneath an energized electrode (20);

and a low-friction surface layer applied over said metal layer,

wherein, in accordance with the invention,

the low-friction slide surface layer (13) is formed, prior to contact with an energized electrode, of discontinuous islands smaller than the contacting surface of the electrode (20) to permit easy gliding of the electrode (20) over the surface of the carrier without marring or scratching or leaving tracks on the carrier upon relative movement between the carrier and the electrode while providing for electrical connection of the electrode with said metal layer (12).

4,371,880

DISPOSABLE STYLUS AND RESERVOIR

Donald A. Peterson, Berwyn, Ill., assignor to Stoelting Co., Chicago, Ill.

Filed Aug. 17, 1981, Ser. No. 293,490

Int. Cl.³ G01D ***15/16***

U.S. Cl. 346—140 R **2 Claims**

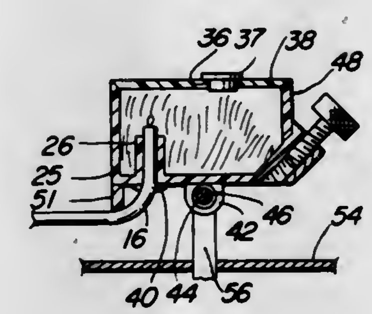

1. A disposable stylus and housing therefor comprising a hollow housing having top, bottom, front and rear end walls, an interiorly threaded hollow portion on said rear wall medially of said side walls and extending angularly upwardly from said bottom wall, a headed screw disposed therein, a cylindrical tube extending upwardly in said housing and integrally formed on said bottom wall adjacent said front end wall, said tube communicating with the interior of said housing and outside of said bottom wall, a horizontally-extending stylus, one end of said stylus bent at right angles upwardly and rigidly seated in said tube, the opposite end of said stylus bent downwardly, a penpoint in said latter end, a wick in said stylus, fibrous material packed in said housing, filling means whereby to supply ink interiorly of said housing and said filling means then being plugged, a pair of ears each extending downwardly from the lower ends of said side walls and containing a perforation in each ear and a pivot pin extending between and through said perforations.

4,371,881

PIVOTABLE INK-REPELLING SCREEN FOR THE WRITING HEAD OF AN INK RECORDING DEVICE

Klaus Bork, and Alfred Rueckerl, both of Munich, Fed. Rep. of Germany, assignors to Siemens Aktiengesellschaft, Berlin & Munich, Fed. Rep. of Germany

Filed Jun. 2, 1981, Ser. No. 269,568

Claims priority, application Fed. Rep. of Germany, Jun. 11, 1980, 3021913

Int. Cl.³ G01D ***15/18***

U.S. Cl. 346—140 R **13 Claims**

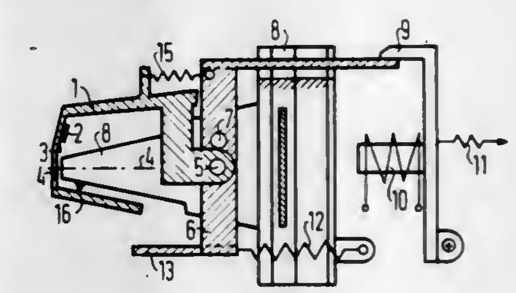

1. Apparatus for shielding and cleaning a writing head for an ink recording device having a plurality of ink dispensing openings comprising a shield member substantially enclosing said writing head adjacent said openings and movable between a position unobstructive to flow from said openings and a position blocking said openings, said shield member having a resilient flap element and a closure portion attached thereto, whereby movement of said shield member to said blocking position causes said flap element to first wipe said openings followed by said closure portion covering said openings.

4,371,882

PROCESS FOR PREPARING ISOLATED JUNCTIONS IN THIN-FILM SEMICONDUCTORS

Hayden Morris, Washington, D.C., and Richard F. Bis, Mount Airy, Md., assignors to The United States of America as represented by the Secretary of the Navy, Washington, D.C.

Filed Jul. 20, 1978, Ser. No. 926,364

Int. Cl.³ H01L ***27/12***

U.S. Cl. 357—4 **8 Claims**

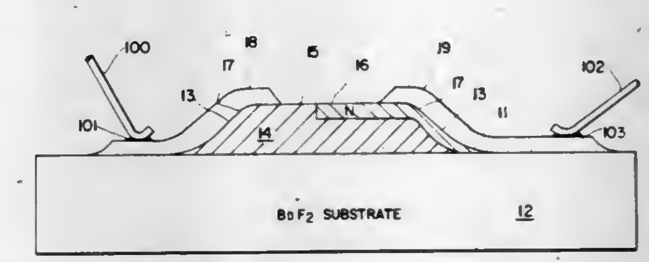

1. A thin-film device, comprising:

an electrically insulating substrate;

a layer of a semiconductor material comprising a plurality of fingers each having a jointed end with a first type conductivity separated by a predominately planar junction from a distal end with a second and opposite type conductivity and a shorting section abutting each joined end;

a plateau central to the layer describing a plane substantially parallel to the surface;

a rounded rim bordering the plateau; and

sloping sides joining the rounded rim with the surface of the substrate.

4,371,883

CURRENT CONTROLLED BISTABLE ELECTRICAL ORGANIC THIN FILM SWITCHING DEVICE

Richard S. Potember; Theodore O. Poehler, Jr., both of Baltimore, and Dwaine O. Cowan, Towson, all of Md., assignors to The Johns Hopkins University, Baltimore, Md.

Filed Mar. 14, 1980, Ser. No. 130,400

Int. Cl.[3] H01L *29/28*

U.S. Cl. 357—8 **27 Claims**

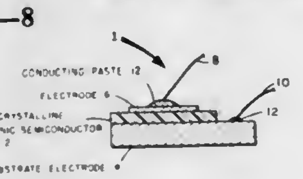

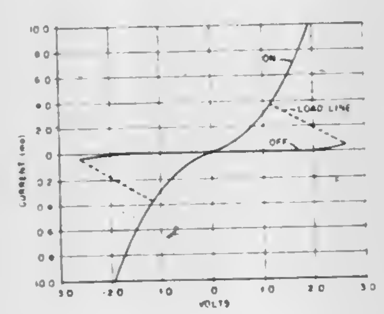

1. An electric, current-controlled device for providing stable, reproducible switching comprising:

a thin film which comprises:

a metal wherein the metal is a material selected from the group consisting of copper and silver, and

an electron acceptor combined with the metal wherein the electron acceptor is a material selected from the group consisting of tetracyanoquinodimethane (TCNQ), tetracyanonapthoquinodimethane (TNAP), and any of the TCNQ derivatives defined by the notation:

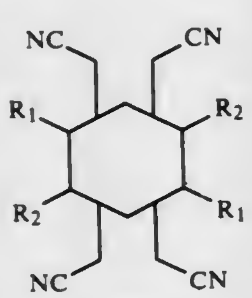

TCNQ

wherein

$R_1=H$, $R_2=—H$;

$R_1=CH_3$, $R_2=—H$;

$R_1=—OCH_3$, $R_2=—H$; or

$R_1=F$, $R_2=—F$; and,

an electric field applied across said film, said applied field being sufficient to induce a solid state reversible electrochemical reaction in said film wherein said electrochemical reaction causes a detectable switching in electrical impedance from a first to a second impedance state in said thin film.

4,371,884

INAS-GASB TUNNEL DIODE

Leo Esaki, Chappaqua, and Chin-An Chang, Peekskill, both of N.Y., assignors to The United States of America as represented by the Secretary of the Army, Washington, D.C.

Filed Jan. 23, 1981, Ser. No. 227,890

Int. Cl.[3] H01L *29/88*

U.S. Cl. 357—12 **15 Claims**

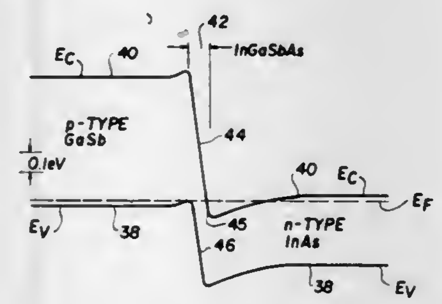

1. A high speed semiconductor device exhibiting a tunneling characteristic, comprising in combination:

first and second semiconductor regions having a mutually different composition and conductivity type separated by a relatively thin interface layer having a composition including the constituent materials of both said first and second semiconductor regions, said first and second semiconductor regions having energy band gaps which are shifted in mutually opposite directions and where said interface layer is sufficiently thin that the mechanism for carrier transfer between said first and second semiconductor regions is tunneling through said interface layer.

4,371,885

CHARGE COUPLED DEVICE IMPROVED MEANDER CHANNEL SERIAL REGISTER

William J. Parrish, Santa Barbara, and James L. Gates, Vista, both of Calif., assignors to Hughes Aircraft Company, Culver City, Calif.

Continuation of Ser. No. 83,422, Oct. 10, 1979, abandoned. This application Jun. 18, 1981, Ser. No. 274,994

Int. Cl.[3] H01L *29/78;* G11C *19/28;* H01L *29/04*

U.S. Cl. 357—24 **14 Claims**

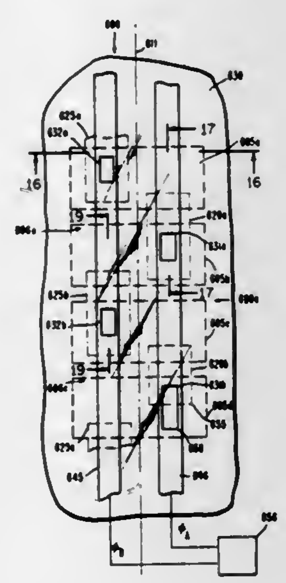

1. A charge coupled device formed on a semiconductor substrate for transferring charge in a meander path having right and left regions extending in a first direction in a plane, comprising:

first insulated electrode means for controlling charge flow having a plurality of conductive portions, each of said portions extending in a second direction at least partially across said right and left regions;

second insulated electrode means extending in said first direction, alternate pairs of adjacent ones of said first electrode means and said second electrode means at least partially overlapping for controlling charge flow in said right region;

third insulated electrode means extending in said first direction, the remaining pairs of adjacent ones of said first electrode means and said third electrode means at least partially overlapping for controlling charge flow in said left region; and

means for applying clock signals to selected ones of said first, second and third electrode means, wherein said second and third electrode means comprise a plurality of discrete electrodes, each of said discrete electrodes overlapping adjacent pairs of said first electrode means.

4,371,886

HIGH VOLTAGE DIELECTRICALLY ISOLATED DUAL GATE SOLID-STATE SWITCH

Adrian R. Hartman, New Providence; Alfred U. MacRae, Berkeley Heights, and Peter W. Shackle, Bridgewater, all of N.J., assignors to Bell Telephone Laboratories, Incorporated, Murray Hill, N.J.

Continuation-in-part of Ser. No. 972,021, Dec. 20, 1978, abandoned. This application Dec. 28, 1979, Ser. No. 107,772

Int. Cl.[3] H01L *29/74*

U.S. Cl. 357—38 **23 Claims**

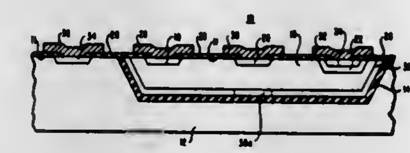

1. A structure comprising a semiconductor body (16) whose bulk is of one conductivity type and which has a major surface (11), a localized first region (18) which is of the one conductivity type, and a localized second region (20) and a localized third region (24) which are both of the opposite conductivity type, each of the localized first (18), second (20), and third (24) regions being of relatively low resistivity as compared to the bulk portion of semiconductor body (16) and being spaced apart from the others, and separate electrodes (28, 30 and 32) being connected to each of the first (18), second (20), and third (24) regions, the localized first (18), second (20), and third (24) regions each having a portion thereof which forms a part of surface (11), the semiconductor body (16) is separated from a semiconductor wafer (substrate) (12) by a dielectric layer (14), the semiconductor wafer (substrate) (12) is adapted to facilitate connection to an electrode (36) and is CHARACTERIZED BY:

a localized fourth layer (38, 38*a*) of the same conductivity type as the third region, the fourth regions being sandwiched between the dielectric layer (14) and the semiconductor body (16).

4,371,887

HIGH VOLTAGE SOLID-STATE SWITCH

Adrian R. Hartman, New Providence; Terence J. Riley, Warren, and Peter W. Shackle, Bridgewater, all of N.J., assignors to Bell Telephone Laboratories, Incorporated, Murray Hill, N.J.

Filed Dec. 28, 1979, Ser. No. 107,775

Int. Cl.[3] H01L *29/74*

U.S. Cl. 357—38 **11 Claims**

1. A switching device comprising a semiconductor body (16), a bulk portion of which is of a first conductivity type, a first region (18) located within the body (16) of a second conductivity type that is opposite that of the first conductivity type, a second region (24) located within the body (16) and being of the first conductivity type, a third region (22) of the second conductivity type, the third region (22) surrounds and contacts the second region, a gate region (20) located within the body (16) and being of the first conductivity type; the first (18), third (22), and gate (20) regions being mutually separated by portions of the bulk of the semiconductor body (16) and being contained on a first major surface of the body (16), the resistivity of the bulk of the body (16) being higher than the resistivity of the first (18), second (24), third (22), and gate (20) regions, the parameters of the device being such that, with a first voltage applied to the gate region, depletion regions are formed in the body (16) and the potential of the portion of the bulk below the gate region (22) and above the dielectric layer (24) is more positive than that of the first, second, and third regions (18, 22, 24) such that current flow between the first and

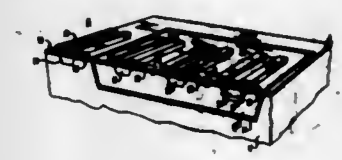

second regions (18, 24) is substantially inhibited, and that, with a second voltage applied to the gate region (20) and with appropriate voltages applied to the first and second regions (18, 24), a relatively low resistance current path is established between the first and second regions (18, 24) by dual carrier injection, characterized in that the gate region (20) is located essentially directly between the first region (18) and the third region (22).

4,371,888

Patent Not Issued For This Number

4,371,889

Patent Not Issued For This Number

4,371,890

TAPERING OF OXIDIZED POLYSILICON ELECTRODES

Constantine N. Anagnostopoulos, Mendon, and Deepak K. Ranadive, Webster, both of N.Y., assignors to Eastman Kodak Company, Rochester, N.Y.

Filed Oct. 29, 1980, Ser. No. 201,957

Int. Cl.[3] H01L *29/04*

U.S. Cl. 357—59 **8 Claims**

1. A thickly oxidized polysilicon electrode structure comprised of a doped polysilicon electrode structure and a layer of silicon dioxide grown from and overlying said polysilicon electrode structure, wherein (1) the thickness t_o of the silicon dioxide layer is about 0.7 microns and the thickness of the underlying polysilicon is about 0.6 microns such that $t_o \leqq 1.5\, t_{ps}$, where t_{ps} is the thickness of the underlying polysilicon, and (2) the profile of the thickly oxidized polysilicon electrode structure at an edge thereof is tapered so as not to have an inward curvature.

4,371,891

CHROMINANCE SIGNAL PROCESSOR

Thomas D. Yost, Indianapolis, Ind., assignor to RCA Corporation, New York, N.Y.

Filed Apr. 10, 1981, Ser. No. 252,818

Int. Cl.[3] H04N *9/535*

U.S. Cl. 358—31 **13 Claims**

1. A color television receiver system for processing a video

signal containing a luminance component, and a chrominance component with a modulated color subcarrier, disposed within a frequency spectrum of said video signal in frequency interleaved relation, including: a source of timing signals; a comb filter responsive to said video signal and to said timing signals for providing at a first output a combed luminance signal with amplitude peaks at integral multiples of an image line scanning frequency and amplitude nulls at odd multiples of one-half said line frequency, and for providing at a second output a signal with amplitude peaks at odd multiples of one-half said line frequency and amplitude nulls at integral multiples of said line frequency; means for demodulating chrominance signals derived from said second output of said comb filter; and signal translating means included in a signal coupling path between said second comb filter output and said demodulating means, and responsive to signals from said second comb filter output

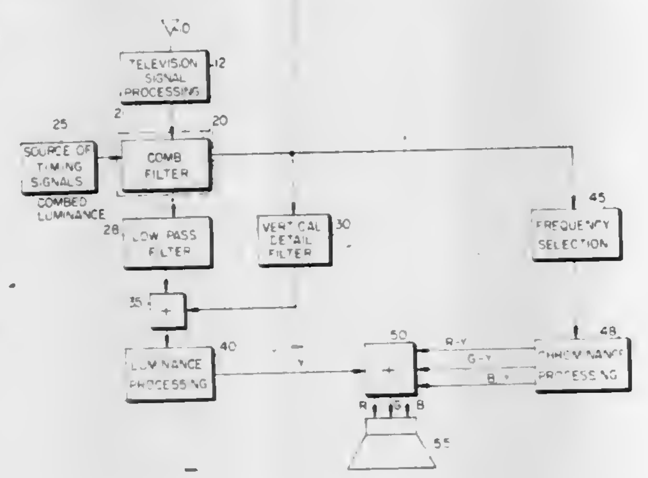

for supplying chrominance signals to said demodulating means with a substantially symmetrical amplitude and linear phase response, said signal translating means comprising:

first bandpass filter means for receiving signals from said second output of said comb filter inclusive of said desired chrominance signals and undesired components at the frequency of said signal, said first filter means comprising first and second cascaded resonant circuits tuned to provide a maximum amplitude response at a frequency greater than the frequency of said color subcarrier; and

second bandpass filter means with an input for receiving filtered signals from said first bandpass filter means, and an output coupled to said demodulating means, said second filter means being tuned to provide a maximum amplitude response at a frequency greater than said color subcarrier frequency.

4,371,892

LIGHT VALVE IMAGING WITH OPTIMIZED ADDRESSING POTENTIAL(S) TO REDUCE INTER-PIXEL NONUNIFORMITY

Jose M. Mir, Rochester, N.Y., assignor to Eastman Kodak Company, Rochester, N.Y.

Filed Jan. 29, 1981, Ser. No. 230,095

Int. Cl.³ H04N *1/46*

U.S. Cl. 358—75 **22 Claims**

1. In electronic imaging apparatus of the type including (1) an electro-optic light valve array which comprises a plurality of discretely addressable elements, (2) means for illuminating elements of said array with light and (3) addressing means for activating said elements between light transmitting and non-transmitting conditions in accordance with image information, the improvement wherein said addressing means is adapted to apply to said elements, during all activating sequences of each activation period, predetermined nominal activating potential(s) of magnitude selected to minimize inter-element light

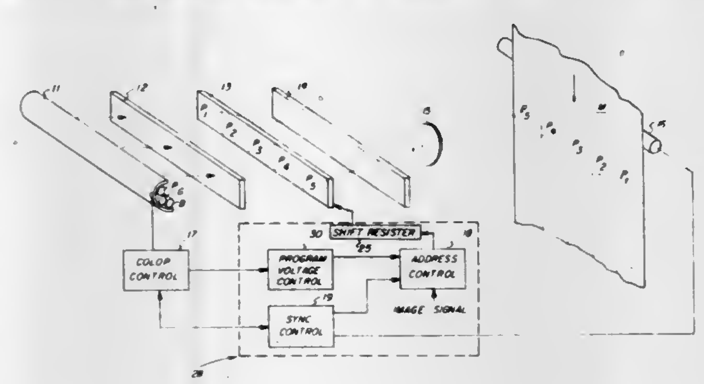

transmission variation, whereby the light transmissions of the elements of said light valve array are rendered more uniform.

4,371,893

VIDEO COMMUNICATION SYSTEM ALLOWING GRAPHIC ADDITIONS TO THE IMAGES COMMUNICATED

Andre J. Rabeisen, 14 rue Philippe le Hardi, 21000 Dijon, France

Filed Sep. 3, 1980, Ser. No. 183,747

Claims priority, application France, Sep. 11, 1979, 79 22653

Int. Cl.³ H04N *5/22*

U.S. Cl. 358—93 **5 Claims**

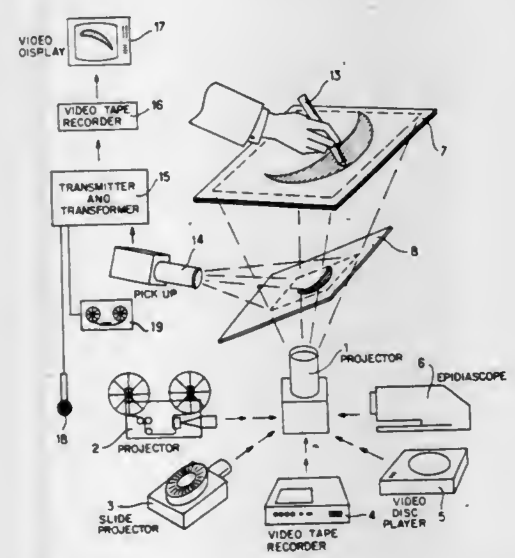

1. A system of video communication, comprising a screen, means for projecting images on the screen from beneath the screen, the screen having one transparent lower surface adapted to transmit the images and one semi-transparent upper surface adapted to receive visible markings thereon with the aid of an implement held by a user of the system, opto-electronic means directed toward said lower surface of said screen to pick up from said screen a composite image comprised by the projected image and the added markings, and means for transmitting said composite image.

4,371,894

VIDEO DISC TRANSDUCER SYSTEM AND METHOD

Marvin Camras, Glencoe, Ill., assignor to IIT Research Institute, Chicago, Ill.

Continuation of Ser. No. 826,054, Aug. 19, 1977, abandoned, which is a continuation-in-part of Ser. No. 519,340, Oct. 30, 1974, abandoned. This application Jan. 11, 1980, Ser. No. 111,461

Int. Cl.³ H04N *5/76*

U.S. Cl. 358—342 **28 Claims**

1. A video transducer system comprising a record disc having a central axis of rotation and having successive radially offset arcuate track sections each extending arcuately about the central axis, said arcuate track sections each having a series of recorded images recorded thereon and each recorded image comprising an ordered plural dimensional spacial distribution of recorded image elements corresponding to a plural dimensional visual image, with the recorded image elements corresponding to a single visual image providing a recorded image frame and the successive recorded images of said arcuate video

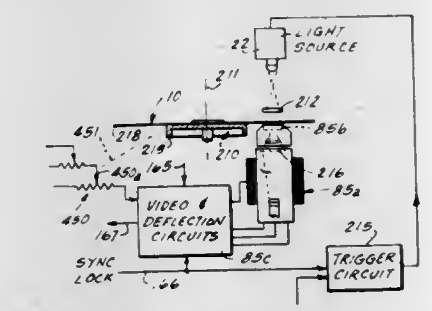

record track presenting a time sequence of said recorded image frames to provide a substantial number of recorded image frames per inch along each arcuate track section of the video record track, means comprising a flashing light source for illuminating said recorded images in sequence, and video camera means for receiving light images of the illuminated recorded images and for transmitting a video signal to electronically reproduce the series of recorded images.

4,371,895

CODED VIDEO SIGNAL TRANSMITTING AND RECEIVING SYSTEM

Toshio Koga, Tokyo, Japan, assignor to Nippon Electric Co., Ltd., Tokyo, Japan

Filed Jan. 15, 1981, Ser. No. 225,401

Claims priority, application Japan, Jan. 18, 1980, 55-4379; Sep. 12, 1980, 55-126125; Sep. 12, 1980, 55-126126; Sep. 12, 1980, 55-126127; Dec. 1, 1980, 55-169407

Int. Cl.³ H04N *7/12*

U.S. Cl. 358—136 **9 Claims**

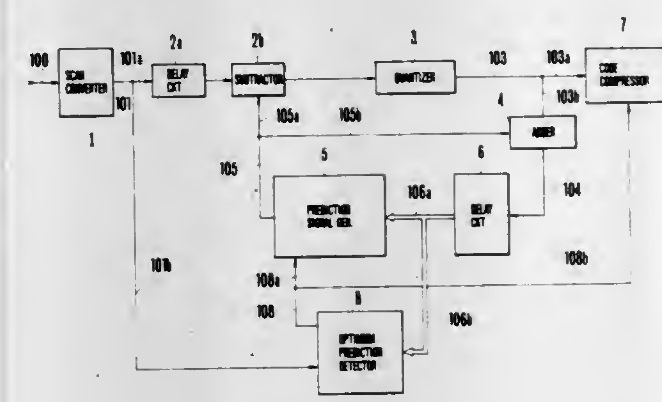

1. A coded video signal transmitting and receiving system comprising in combination a coding apparatus using a plurality of prediction functions and provided for a transmitter, a decoding apparatus provided for a receiver, and coded signal transmission path means, whereby a coded video signal transmitted from the coding apparatus via the transmission path means is received at the decoding apparatus and decoded thereby, said coding apparatus comprising:

scan converter means which forms from, a video signal received in time series two-dimensional blocks each consisting of a plurality of picture elements which extend over a plurality of scanning lines, and outputs the video signal in a different sequence from that of said input time series;

error signal generating means which generates a predictive error value per block with respect to arbitrary one of said plurality of prediction functions associated with each block;

prediction function designation means which designates a prediction function to generate a subsequent prediction error value by use of part or all of prediction error values which have been generated by said error signal generating means;

prediction signal generating means which determines an optimum prediction function selected from prediction functions produced from said prediction function designation means after a predetermined time as elapsed, and generates prediction signals for picture elements in said two-dimensional block sequentially in accordance with said optimum prediction function;

predictive coding means which performs predictive coding by use of said prediction signal and the video signal output from said scan converter means; and

code compressor means which performs compression coding for at least a signal representing said optimum prediction function and the prediction error signal delivered from said predictive coding means, to produce a compressed predictive coding signal,

said decoding apparatus comprising:

means which receives the compressed predictive coding signal sent from the coding apparatus via said transmission path means, for separating said compressed code by expansion into a signal representing said optimum prediction function and a corresponding prediction error signal;

means which receives a supplementary decoded video signal, for generating a prediction signal in accordance with a signal representing a prediction function separated by said separating means;

predictive decoding means which receives an output of said prediction signal generating means and a prediction error signal separated by said separating means, for generating said decoded video signal;

scan inverter means which transforms an output of said prediction decoding means into the video signal in said original time series.

4,371,896

STABILIZED VIDEO SIGNAL CONTROL LOOP

Robert L. Shanley, II, Indianapolis, Ind., and Leopold A. Harwood, Bridgewater, N.J., assignors to RCA Corporation, New York, N.Y.

Filed Aug. 27, 1981, Ser. No. 296,823

Int. Cl.³ H04N *5/18*

U.S. Cl. 358—172 **10 Claims**

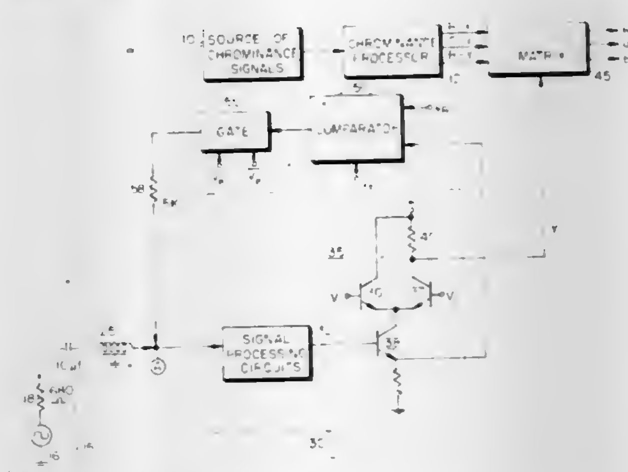

1. In a video signal processing system including a video signal processing channel and a source of image representative video signal having periodically recurring image intervals, and image blanking intervals between adjacent image intervals and comprising a reference interval containing a black reference level, apparatus comprising:

input means, including a first impedance and an AC signal

coupling capacitor, for AC coupling video signals to an input of said video channel;
control means arranged in a control loop with said video signal processing channel for maintaining a desired video signal black reference level, including
means for comparing said black reference level of said video signal with a reference voltage to develop an output control voltage representative of the differences between said black reference level and said reference voltage;
a second impedance; and
keyed gating means operative during said black reference intervals for conducting said control voltage to said input of said video channel via said second impedance;
means for storing said control voltage conducted to said video channel, said storing means consisting essentially of said AC signal coupling capacitor and wherein
said first impedance, said AC signal coupling capacitor, and said second impedance form a voltage divider network during said black level reference intervals for network during said black level reference intervals for reducing the AC signal gain of said control loop to thereby prevent oscillation of said control loop at AC signal frequencies including video signal frequencies during said reference intervals.

4,371,897
FLUORESCENT ACTIVATED, SPATIALLY QUANTITATIVE LIGHT DETECTOR
Charles J. Kramer, Pittsford, N.Y., assignor to Xerox Corporation, Stamford, Conn.
Continuation-in-part of Ser. No. 183,132, Sep. 2, 1980, abandoned. This application Apr. 27, 1981, Ser. No. 257,694
Int. Cl.³ H04N *1/24*
U.S. Cl. 358—294 **39 Claims**

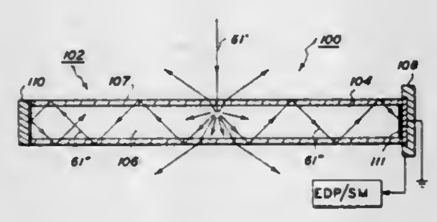

1. A fluorescent-activated spatial quantitative light detector comprising
an elongated rod-like member, said member comprising a fluorescent dye molecularly dispersed throughout a generally transparent solid material, and
at least one photosensor in operative association with said member to detect fluorescent light emitted by said member upon exposure to incident light.

4,371,898
COMPOSITE INFORMATION RECORDING APPARATUS
Hiroya Nakamura, Hachioji, Japan, assignor to Konishiroku Photo Industry Co., Ltd., Tokyo, Japan
Filed May 28, 1980, Ser. No. 154,148
Claims priority, application Japan, May 31, 1979, 54-66854; Oct. 31, 1979, 54-139940
Int. Cl.³ H04N *1/22*
U.S. Cl. 358—300 **4 Claims**

1. In a composite information recording apparatus for recording on a recording sheet a composite image of an original and electric signal information as separate but substantially contiguous portions of the same recording sheet substantially without overlap therebetween, and including a copy board having a portion on which the original is received for electrophotographic copying thereof,
data input means for entering variable information into said apparatus for composite recording with an image of the original and for converting said variable information to electric signal information,
operable means on the copy board adjacent the original receiving portion thereof for indicating the boundaries of the original so as to facilitate placement of the original on the copy board for predetermined placement thereon with respect to the variable information entered into the apparatus for composite recording with an image of the original, and

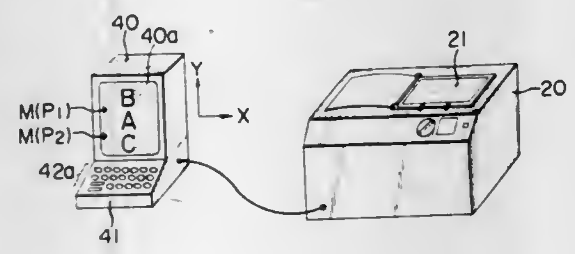

means for communication between said data input means and said operable means on the copy board for providing an automatic determination of proper and permissible positional correlation between the variable electric signal information and the image of the original for composite recording on the same recording sheet,
said operable means comprising at least a row of illuminating elements disposed along an edge of the copy board original receiving portion for providing a visual display of at least a boundary beyond which the original is to be placed on the copy board for reproduction so as to prevent overlapping thereof with variable information previously entered into said apparatus through said data input means.

4,371,899
TIME BASE ERROR CORRECTION SYSTEM FOR PLAYER
Ludwig Ceshkovsky, Fountain Valley, and Wayne R. Dakin, Redondo Beach, both of Calif., assignors to Discovision Associates, Costa Mesa, Calif.
Division of Ser. No. 890,670, Mar. 27, 1978, abandoned. This application Mar. 17, 1980, Ser. No. 130,903
Int. Cl.³ H04N *5/76;* G11B *7/00*
U.S. Cl. 358—315 **22 Claims**

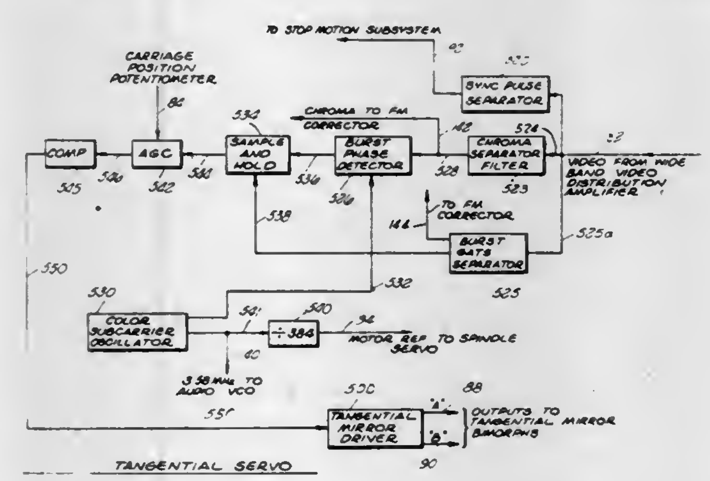

1. A time base error correction system for use in an apparatus for recovering an information signal from an information track recorded on a disc-shaped information bearing surface, wherein the information signal includes a periodic synchronizing signal that defines a time base, and the apparatus includes optical system means for directing a source beam of radiation to follow along the information track and spindle servo means for rotating the information bearing surface relative to the source beam, to produce a modulated beam of radiation containing the information signal, the optical system means further directing the modulated beam to signal recovery means for recovering the information signal from the modulated beam, the time base error correction system comprising:
separation means for separating the synchronizing signal from the information signal recovered from the modulated beam;
reference signal means for generating a reference signal having a prescribed frequency;
phase detection means for detecting the relative phase between the synchronizing signal and the reference signal, and for generating a control signal representative of error in relative phase;
radial location detection means for detecting the radial location of the source beam relative to the disc;
control signal adjusting means for adjusting the control signal as a function of the radial location of the source beam relative to the disc; and
tangential beam steering means responsive to the control signal for steering the source beam tangentially along the information track to vary the rate of relative movement between the source beam and the information bearing surface in a manner correcting for time base errors in the information signal recovered from the modulated beam.

4,371,900
EQUALIZATION OF DC NULL IN REPRODUCING A HIGH DENSITY RECORDING
William D. Huber, San Jose, Calif., assignor to Memorex Corporation, Santa Clara, Calif.
Filed Jan. 23, 1981, Ser. No. 227,612
Int. Cl.³ G11B *5/09, 5/45*
U.S. Cl. 360—40 **10 Claims**

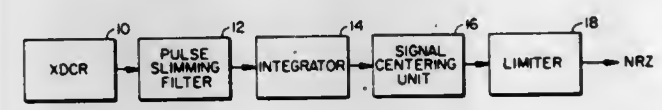

1. A circuit for centering an alternating current input signal about a zero reference voltage level, the circuit comprising
first and second input terminals for receiving the input signal,
first and second output terminals,
first, second, third and fourth resistors, and
first and second diodes, and wherein
the first input terminal is connected through the first capacitor to the anode of the second diode and through the second capacitor to the cathode of the first diode,
the second input terminal is connected through the third capacitor to the anode of the first diode and through the fourth capacitor to the cathode of the second diode,
the first output terminal is connected through the first resistor to the anode of the second diode and through the second resistor to the cathode of the first diode, and
the second output terminal is connected through the third resistor to the anode of the first diode and through the fourth resistor to the cathode of the second diode.

4,371,901
PROGRAMMABLE SIGNAL EQUALIZER
Prabodh L. Shah, Denver, Colo., assignor to Honeywell Inc., Minneapolis, Minn.
Filed Oct. 16, 1980, Ser. No. 197,709
Int. Cl.³ G11B *5/45, 5/02*
U.S. Cl. 360—65 **5 Claims**

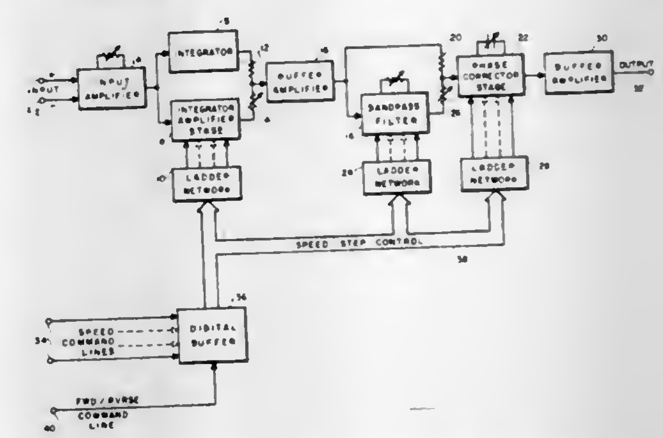

1. An equalizer amplifier for amplifying an output of a reproduce head in a data recorder having a moving recording medium driven past said reproduce head at a selected one of a plurality of recording medium speeds comprising
a plurality of active RC circuits arranged in a serial circuit, said RC circuits including an integrator circuit, a bandpass filter circuit and a phase corrector circuit,
a separate programmable resistor ladder network for each of said RC circuits, said network having digital word selectable switches for altering the equivalent resistance of the ladder network and
means for concurrently applying to all of said ladder networks a digital word arranged to selectively operate said switches in response to a selected one of the recording medium speeds.

4,371,902
DISK INITIALIZATION METHOD
Duane W. Baxter; Joseph L. Evjen, Jr.; William C. Hoveland, all of Rochester; Roy A. Roble, Byron; Donald R. Smith, Rochester, and John H. Wirz, Pine Island, all of Minn., assignors to International Business Machines Corporation, Armonk, N.Y.
Filed Jun. 30, 1980, Ser. No. 164,727
Int. Cl.³ G11B *21/02, 21/10*
U.S. Cl. 360—75 **8 Claims**

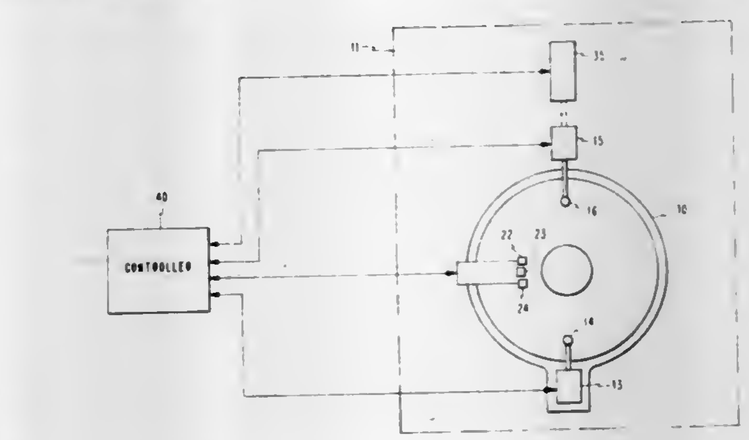

1. The method of initializing sector servo information on the disk storage media of a disk assembly which includes a dedicated transducer subassembly using a servo track writing device comprising:
writing first and second non-adjacent tracks on the surface of said disk storage media using said dedicated transducer subassembly;
measuring the radial position and circumferential timing of

the impulses written relative to the position and timing of said servo track writing device;

determining the radial position and circumferential timing for each pattern to be written; and

successively writing the servo tracks by radially positioning said servo track writing device, circumferentially adjusting the write start timing and writing said servo tracks to provide custom placement of the servo information wherein the location and alignment are tailored to the position and path of travel of the associated dedicated transducer subassembly.

4,371,903
EMERGENCY HEAD RETRACT SYSTEM FOR MAGNETIC DISC DRIVES

Martyn A. Lewis, Pacific Palisades, Calif., assignor to DMA Systems Corporation, Goleta, Calif.
Filed Sep. 28, 1981, Ser. No. 305,941
Int. Cl.^{3} G11B *5/54, 21/02*

U.S. Cl. 360—75 **9 Claims**

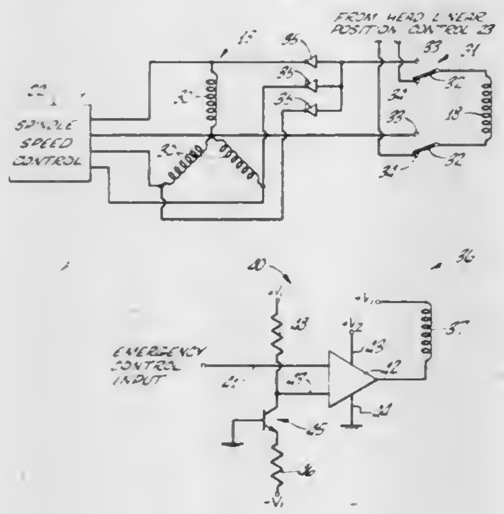

1. In a disc drive including a disc having a magnetic surface and supported for rotation on a spindle, at least one magnetic head movable relative to said disc surface, a spindle motor for driving said spindle, a head support structure coupled to said head, a drive motor having a positioner coil for moving said head support structure so as to move said head along said disc surface, and circuit means responsive to an emergency condition for causing said drive motor positioner coil to retract said head support structure, the improvement wherein said spindle motor is a rotating magnet DC motor and wherein said circuit means comprises:

switch means operatively positioned between the stator windings of said DC motor and said drive motor positioner coil for selectively coupling said coil either to the circuitry which normally drives same or to said stator windings; and

means responsive to said emergency condition for operating said switch means.

4,371,904
FLEXIBLE MAGNETIC DISK SYSTEM

Raymond Brooke, Woodland Hills, Calif., assignor to Pertec Computer Corporation, Los Angeles, Calif.
Filed Aug. 22, 1980, Ser. No. 180,326
Int. Cl.^{3} G11B *21/10*

U.S. Cl. 360—77 **8 Claims**

1. In a flexible disk drive system which includes a rotatable flexible disk and a disk having a read/write head mounted on a carriage to move radially along the rotating disk, the improvement wherein:

said disk defines a plurality of narrow positioning sectors angularly spaced about the disk, and a corresponding plurality of sector-indicating holes in the disk with each hole angularly spaced by the same amount from its corresponding positioning sector, each positioning sector defining a plurality of magnetically recorded positioning tracks;

said disk drive including optical sensor means positioned to detect said holes and head adjustment circuit means responsive to said optical sensor means and the output of said head for generating an error signal indicating the deviation of the head from a positioning track; and motor means responsive to said error signal for adjusting the radial position of said head.

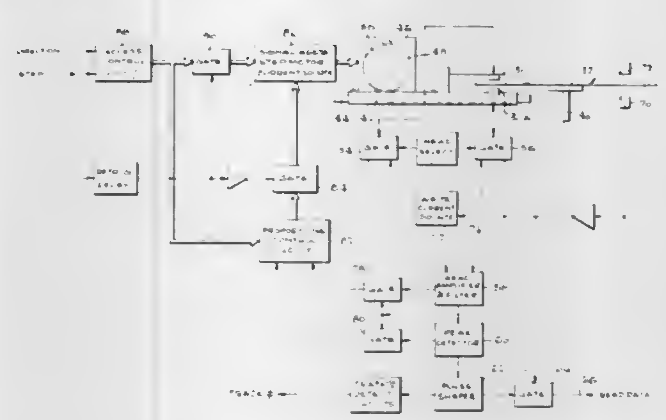

4,371,905
HIGH RESOLUTION HALL EFFECT READ HEAD

Erich P. Valstyn, Santa Barbara, and G. Vinson Kelley, Santa Monica, both of Calif., assignors to Computer & Communications Technology Corporation, Goleta, Calif.
Filed Nov. 13, 1980, Ser. No. 206,461
Int. Cl.^{3} G11B *5/38*

U.S. Cl. 360—112 **8 Claims**

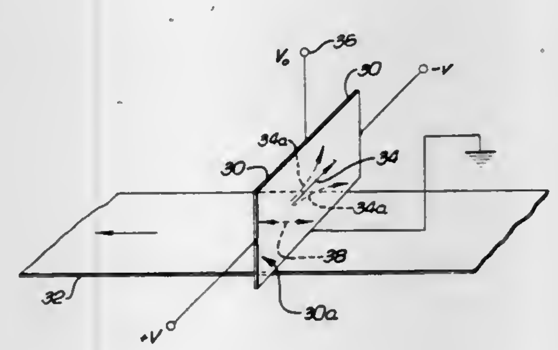

1. A high resolution differential Hall effect head for reading information recorded on a magnetic recording medium, said head including no magnetic core elements and comprising at least one thin film Hall effect element which is oriented so that the film surface is perpendicular to and the film edge is parallel to the surface of the recording medium, means for biasing the Hall effect element so that it senses the component of the magnetic field of the recording medium which is parallel to the surface of the medium, said head including differential means for providing an output signal proportional to the difference between the magnetic field strength of the medium sensed at two points which are spaced a predetermined distance apart in the direction of travel of the medium.

4,371,906
OVERSPEED PROTECTIVE APPARATUS FOR A PORTABLE TOOL

Lorenzo E. Alessio, Lecco, and Giuseppe Cuneo, Caloiziocorte, both of Italy, assignors to Black & Decker Inc., Newark, Del.
Filed Jun. 18, 1980, Ser. No. 160,583
Claims priority, application Italy, Jun. 28, 1979, 23952 79
Int. Cl.^{3} H02H *1/00*

U.S. Cl. 361—51 **17 Claims**

1. A power tool, comprising:

an electric motor having at least one pair of stator windings electrically connected in parallel;

actuating means, coupled to said motor and responsive to the rotational speed thereof, for sensing an overspeed malfunction wherein the motor speed exceeds a predetermined maximum operating speed;

electrical switch means, connected in circuit with said stator windings and responsive to the sensing by said actuating means of an overspeed malfunction, for switching the electrical connection of said pair of stator windings from said parallel connection to a series connection to reduce

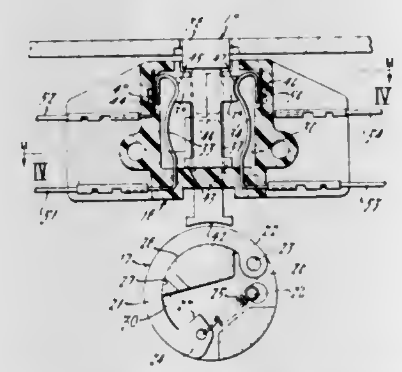

the motor speed to below said predetermined operating speed; and

means, associated with said electrical switch means, for rendering said switch means unactuatable once actuated so as to maintain said series connection of the stator windings until the power tool is dismantled for repair;

whereby the power tool can continue to be used by an operator at said reduced speed after the overspeed malfunction has occurred, but said switch means cannot be simply reset by the operator in disregard of the malfunction.

4,371,907
PROTECTIVE RELAY APPARATUS AND METHODS FOR PROTECTING ELECTRICAL POWER TRANSMISSION LINES

Allan M. Bignell, Mississauga, Canada, assignor to Westinghouse Canada Inc., Hamilton, Canada
Filed Aug. 11, 1981, Ser. No. 291,745
Int. Cl.^{3} H02H *3/40*

U.S. Cl. 361—82 **36 Claims**

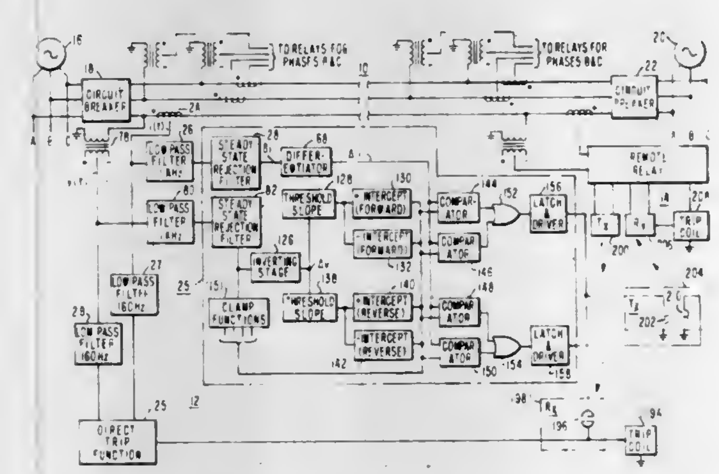

1. A method of determining the direction to a fault from a measuring point on an A.C. electrical power transmission line, comprising the steps of:

providing a current derived signal which is a function of the fault generated current deviation from the steady pre-fault current as a function of time,

providing a voltage derived signal which is a function of the fault generated voltage deviation from the steady pre-fault voltage as a function of time,

transforming at least one of said signals such that the transformation results in the order of differentiation of the current derived signal being one order higher than the voltage derived signal, with the different order voltage and current derived signals being referred to as first and second signals, respectively,

and processing said first and second signals to provide an indication of the direction of the fault relative to the measuring point.

4,371,908
DIGITAL PROTECTIVE RELAYING SYSTEMS

Fumio Andow, Hachioji; Takayuki Kobayashi; Ryotaro Kondow, both of Fuchu, and Yoshiji Nii, Kawaguchi, all of Japan, assignors to Tokyo Shibaura Denki Kabushiki Kaisha, Kawasaki, Japan
Continuation of Ser. No. 75,927, Sep. 17, 1979, abandoned. This application Feb. 3, 1982, Ser. No. 345,356
Int. Cl.^{3} H02H *3/30*

U.S. Cl. 361—83 **5 Claims**

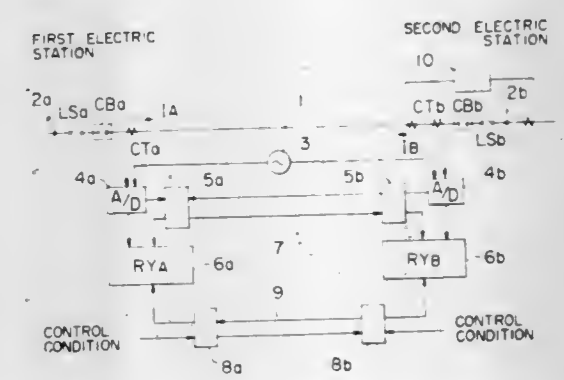

1. In a digital protective relaying device for protecting an electric power transmission system including an electric power transmission line having a first electric station and a second electric station at both ends thereof, each electric station including a circuit breaker, a disconnecting switch, a detector for detecting an electric value related to an input into the electric power transmission line, an A/D converter for converting an output of the detector into a digital value, a data transmitting and receiving terminal connected to receive the output of the A/D converter and to send the same to a data transmitting and receiving terminal in the other electric station through a data transmission line extending between the two data transmitting and receiving terminals, and a current differential protective relay connected to receive outputs of the two A/D converters for carrying out a relaying operation based on a vector sum of the two A/D converter outputs, one directly and the other through said data transmission line, the improvement wherein each current differential protective relay provided in said electric stations including a digital computer which, upon reception of a control condition from the other electric station, changes its data processing steps so as to neglect the output of said A/D converter in the other electric station and to operate the differential protective relay as an over-current protective relay solely according to the output of the A/D converter in the electric station receiving the control condition, said control condition representing one of tripping of the circuit breaker, opening of the disconnecting switch, and locking of the data transmitting and receiving terminal occurring in the other electric station.

4,371,909
HIGH VOLTAGE CONVERTER APPARATUS HAVING OVERVOLTAGE PROTECTION CIRCUITS FOR THYRISTORS

Takashi Kano, Hitachi, Japan, assignor to Hitachi, Ltd., Tokyo, Japan

Filed Dec. 10, 1980, Ser. No. 215,066

Claims priority, application Japan, Dec. 12, 1979, 54-160404

Int. Cl.³ H02H *3/20*

U.S. Cl. 361—91 **4 Claims**

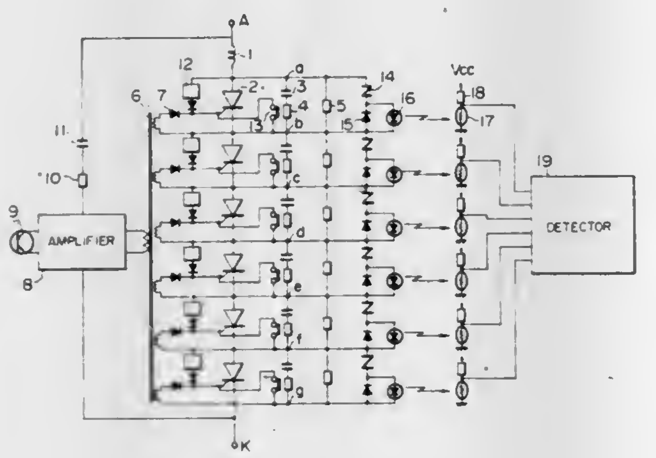

1. In a high voltage converter apparatus including a plurality of tray modules constituting one arm thereof, each tray module comprising:

a plurality of thyristors connected in series;

an ignition circuit for generating an ignition signal for said thyristors;

a pulse transformer having a primary winding and a plurality of secondary windings, said primary winding being connected to said ignition circuit and each of said secondary windings being connected between a gate and a cathode of a corresponding one of said thyristors;

a plurality of voltage dividing circuits, each of said voltage dividing circuits including an impedance element and being connected in parallel with a corresponding one of said thyristors;

a plurality of forward overvoltage protection circuits, each of said forward overvoltage protection circuits being connected between an anode and a gate of a corresponding one of said thyristors;

means, including a plurality of temperature relays each provided in a corresponding one of said voltage dividing circuits, for short-circuiting the gate-cathode path of the associated thyristor when the temperature of the corresponding impedance element included in each of said voltage dividing circuits exceeds a predetermined value;

a plurality of overvoltage detectors, each connected in parallel with a corresponding one of said thyristors and having a detection level which is lower than the operating voltage of said overvoltage protection circuit and higher than the shared voltage of each of said thyristors during its normal operation for detecting an overvoltage condition in the corresponding thyristor; and

high level detector means for generating a stopping instruction signal under such a condition that all of said overvoltage detectors detect simultaneously an overvoltage condition a predetermined number of repetition times.

4,371,910
SAFETY DEVICE FOR ELECTRIC CONSUMERS IN MOTOR VEHICLES

Carsten Bube, Ludwigsburg; Ernst H. Düll, Darmstadt; Gerd Thiele, Stuttgart, and Hans Zeller, Grafenau, all of Fed. Rep. of Germany, assignors to Robert Bosch GmbH, Stuttgart, Fed. Rep. of Germany

Filed Jul. 8, 1980, Ser. No. 166,925

Claims priority, application Fed. Rep. of Germany, Aug. 31, 1979, 2935196

Int. Cl.³ H02H *5/04*

U.S. Cl. 361—106 **4 Claims**

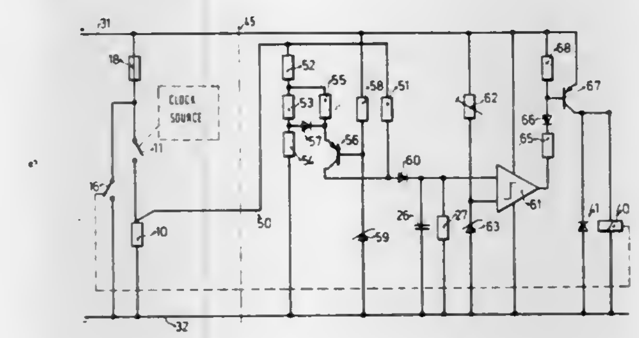

1. Safety apparatus for an electric consumer in a motor vehicle which comprises:

temperature replication means, connected in parallel with the electric consumer, for generating an output signal corresponding to the temperature behavior of the electric consumer as a result of a flow of electric current through the electric consumer, which comprises a resistor-capacitor network;

electric power supply means for supplying current to the electric consumer and the temperature replication circuit;

a threshold switch, connected to receive the temperature replication means output signal, for generating an output signal whenever the temperature means output signal exceeds a maximum predetermined value; and

a switch means, connected in series with the electric consumer and activated to be opened by the threshold switch output signal, for interrupting the flow of current to the electric consumer and the temperature replication circuit from the electric power supply means.

4,371,911
EXCESS VOLTAGE ARRESTERS

Basil O. Baker, Hertfordshire, England, assignor to The M-O Valve Company Limited, London, England

Filed May 8, 1981, Ser. No. 261,946

Claims priority, application United Kingdom, May 16, 1980, 8016345

Int. Cl.³ H02H *7/24*

U.S. Cl. 361—124 **6 Claims**

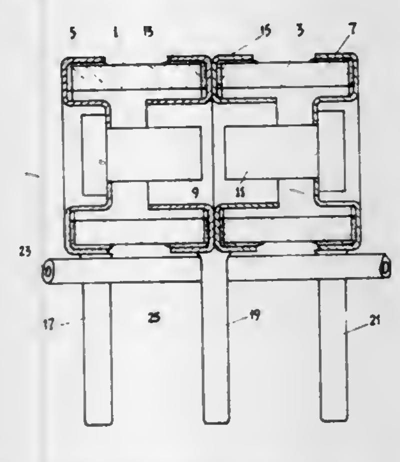

1. An excess voltage arrester comprising: a gas-filled enclosure; a pair of electrodes housed within the enclosure which define between them a discharge gap; respective rigid leads to said electrodes; and an overheating protection device comprising a resilient electrically conductive first member in a flexed condition and a second member of heat softenable electrically insulating material associated with said first member so that on overheating of the arrester the second member softens allowing the first member to move in an attempt to return to its natural shape, and thereby establish an electrically conductive path through itself between the arrester electrodes, said first member being in the form of a length of wire whose natural shape is essentially straight and said second member being in the form of a sleeve on the wire, and said wire in its sleeve being held flexed between said rigid leads to the arrester electrodes so that a portion of said sleeve is trapped between said wire and a said lead, and so that on softening of the said sleeve said wire forces its way through said part of the sleeve into electrical contact with said lead.

4,371,912
METHOD OF MOUNTING INTERRELATED COMPONENTS

Andrzej T. Guzik, Ft. Lauderdale, Fla., assignor to Mótorola, Inc., Schaumburg, Ill.

Filed Oct. 1, 1980, Ser. No. 192,771

Int. Cl.³ H05K *3/34, 1/18*

U.S. Cl. 361—417 **14 Claims**

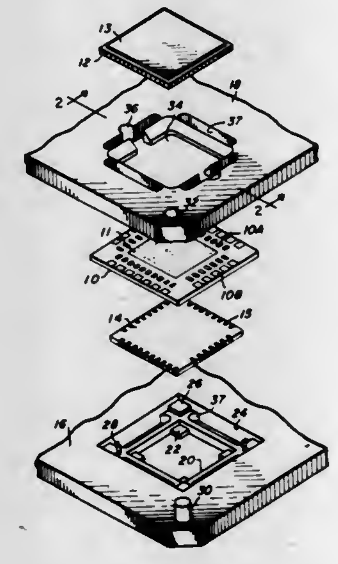

1. A double-sided assembly as for electronic apparatus and comprising:

A single insulating substrate having two surfaces with a plurality of conductive paths on each surface and, in at least a central area, a plurality of through-holes with certain of the conductive paths extending through respectives ones of the holes;

a leadless chip carrier smaller in area than the substrate and having conductive areas on a carrier surface, said conductive areas being removably and conductively fused to certain of the conductive paths on one surface of the substrate;

a first electronic component smaller in area than the substrate and having conductive areas on a first component surface, said conductive areas being removably and conductively fused to conductive paths on the other surface of the substrate, said electronic component substantially overlying said leadless chip carrier; and

a plurality of leads, each conductively affixed to a respective one of the conductive paths on opposite surfaces of said substrate and adjacent at least one edge of the substrate.

11. A method of providing a double-sided assembly as for electronic apparatus including the steps of:

providing an insulating substrate having two surfaces;

providing through-holes in at least the central portion of the substrate;

providing a plurality of conductive paths on each surface of the substrate, including at least some paths on one surface of the substrate which continue through the central holes and onto the other surface of the substrate;

screening solder paste on selected portions of the conductive paths;

providing a first electronic component which is smaller in area than the substrate, and includes conductive paths terminating on a first component surface thereof;

providing a first fixture element having a first cavity for receiving and supporting the first electronic component, and a second cavity above the first cavity for receiving and supporting the substrate;

placing the first electronic component in the first cavity with the first component surface upward;

positioning the substrate in the second cavity;

providing a second electronic component which is smaller in area than the substrate and has conductive paths terminating on a second component surface thereof;

providing a second fixture element having a window therein for receiving the second electronic component;

positioning the second fixture element on the first fixture element;

placing the second electronic component in the window of the second fixture element with second component surface downward, completing a first assembly;

subjecting the completed first assembly to a temperature sufficient to reflow solder the conductive paths of the first and second components to the conductive paths of the substrate;

removing the soldered elements from the fixture;

mechanically attaching at least one lead frame to at least one edge of the substrate and in contact with some of the conductive paths;

providing a third fixture having sections which enclose the portion of the substrate bearing the two electronic components and expose the substrate portion bearing the lead frame;

positioning the reflow soldered assembly in the third fixture element; and

subjecting a portion of the fixture and assembly to flux and molten solder.

4,371,913
REFLECTOR LAMP MODULE FOR PHOTOFLASH ARRAY

David R. Broadt, Lewisburg, Pa., and Emery G. Audesse, Beverly, Mass., assignors to GTE Products Corporation, Stamford, Conn.

Filed Dec. 18, 1980, Ser. No. 217,721

Int. Cl.³ G03B *15/02*

U.S. Cl. 362—17 **15 Claims**

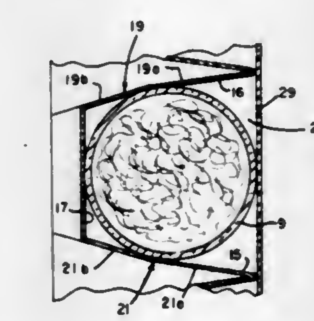

1. In a multilamp photoflash unit, the combination comprising:

a reflector having a plurality of lamp-receiving cavities each having a planar rear wall section joined to a pair of oppositely disposed biplanar sidewall sections defining a front reflector opening width; and

a flashlamp having a tubular envelope disposed within each of said cavities with said envelope contiguous to said planar rear wall section and said oppositely disposed biplanar wall sections and said reflector opening width

with respect to the lamp diameter being in a ratio of less than about 1.2 to 1.

4,371,914

PHOTOFLASH UNIT WITH CIRCUIT BOARD RADIATION SWITCHES FOR SELECTIVE PAIRING OF LAMPS

David R. Broadt, Lewisburg; Donald E. Armstrong, and Carl F. Kackenmeister, both of Williamsport, all of Pa., assignors to GTE Products Corporation, Stamford, Conn.

Filed Dec. 18, 1980, Ser. No. 217,722

Int. Cl.³ G03B *15/02*

U.S. Cl. 362—15 **11 Claims**

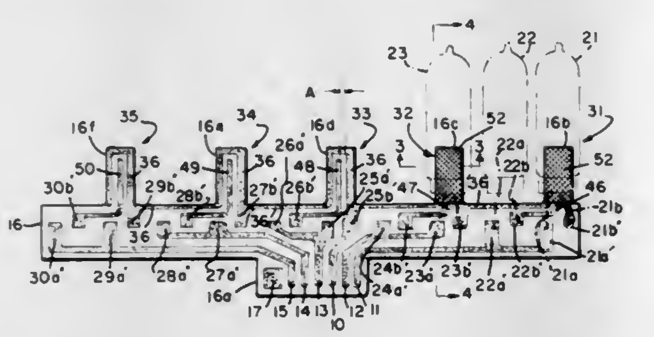

1. A multilamp photoflash unit comprising, in combination:
a printed circuit board having electrically conductive circuit patterns disposed on a surface thereof;
a plurality of 2n flashlamps attached to said circuit board and disposed in a linear array with the longitudinal axes of respective lamps aligned in parallel, each of said lamps being electrically connected to respective portions of said circuit patterns;
said circuit board having a substantially rectangular portion with n spaced apart extensions projecting from a longer side thereof, said extensions being located behind alternate lamps of said linear array;
each of said circuit board extensions containing portions of said conductive circuit patterns spaced apart to form predetermined gaps therebetween; and
a mass of switch material disposed on each of said circuit board extensions and bridging said gaps between circuit patterns, thereby providing a solid state radiation switch on each of said extensions behind and adjacent to a respective lamp for receiving radiant energy emitted by that lamp.

4,371,915

PHOTOFLASH UNIT WITH REFLECTOR RECESSES FOR CIRCUIT BOARD SWITCHES

David R. Broadt, Lewisburg, and Carl F. Kackenmeister, Williamsport, both of Pa., assignors to GTE Products Corporation, Stamford, Conn.

Filed Dec. 18, 1980, Ser. No. 217,723

Int. Cl.³ G03B *15/02*

U.S. Cl. 362—15 **14 Claims**

1. A multilamp photoflash unit comprising, in combination:
a printed circuit board having electrically conductive circuit patterns disposed on a surface thereof;
a plurality of flashlamps attached to said circuit board and electrically connected to respective portions of said circuit patterns, each of said lamps having a tubular envelope;
said circuit board having a substantially rectangular portion with at least one extension projecting from a side thereof, said extension being located behind an associated one of said lamps with the plane of the extension being parallel with the longitudinal axis of the associated lamp;
said circuit board extension containing portions of said conductive circuit patterns spaced apart to form one or more predetermined gaps therebetween and a mass of switch material disposed thereon to bridge said gaps, thereby providing a solid state radiation switch on said extension behind and adjacent to said associated one of the lamps for receiving radiant energy emitted by that lamp;
means containing a plurality of lamp-receiving cavities, each of said cavities being provided with reflective surfaces on the interior thereof which define an opening in the front of the reflective cavity;

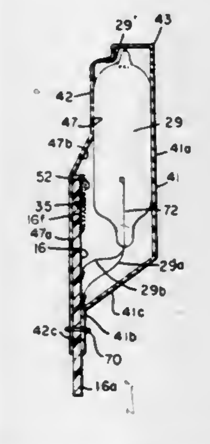

each of said flashlamps being nested in a respective one of said reflective cavities with the longitudinal axis of the lamp parallel to the longitudinal axis of the respective cavity; and
one of said reflective cavities having a rear wall with a recessed portion for accomodating said extension of the circuit board, said circuit board extension being disposed between the lamp associated therewith and the rear wall of said recessed portion of the reflective cavity.

4,371,916

MOTOR-VEHICLE LAMP WITH BASE AREA ILLUMINATION

Ennio De Martino, Turin, Italy, assignor to IAO Industrie Riunite S.p.A., Turin, Italy

Filed Oct. 19, 1979, Ser. No. 86,407

Claims priority, application Italy, Oct. 30, 1978, 69490 A/78

Int. Cl.³ F21V *7/04*

U.S. Cl. 362—31 **1 Claim**

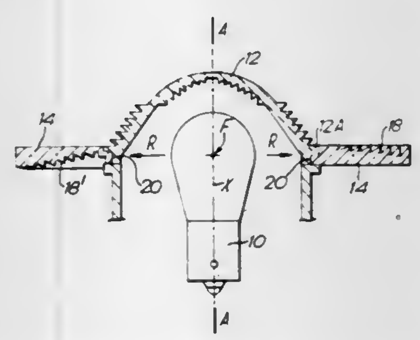

1. In a lamp for a motor vehicle of the type having a lamp bulb having a central axis concentrically surrounded by a convex prismatic cap and wherein the base portion of said cap is substantially coplanar with the central point of the light source within said lamp bulb, the improvement therewith comprising:
a transparent plate having a central circular aperture surrounding and being mechanically and optically coupled to said coplanar base portion of said cap, said plate including a plurality of prismatic elements comprising circular grooves concentrically surrounding said central axis of said lamp bulb wherein the radially directed luminous light flux emanating from said central point of said light source within said lamp bulb is collected and directed toward said prismatic elements in said plate and then directed forwardly away from the surface of said plate in directions which are parallel to the central axis of said lamp bulb, whereby said plate becomes luminous.

4,371,917

VOLTAGE CONVERSION METHOD

Tadeusz Bator, Spanga, Sweden, assignor to Wladimir Wladimiroff, Solna and Hans Andersson, Sandarne, both of, Sweden

PCT No. PCT/SE80/00251, § 371 Date Jun. 16, 1981, § 102(e) Date Jun. 16, 1981, PCT Pub. No. WO81/01224, PCT Pub. Date Apr. 30, 1981

PCT Filed Oct. 15, 1980, Ser. No. 276,384

Claims priority, application Sweden, Oct. 16, 1979, 7908554

Int. Cl.³ H02M *3/22;* **H02P** *13/18*

U.S. Cl. 363—21 **7 Claims**

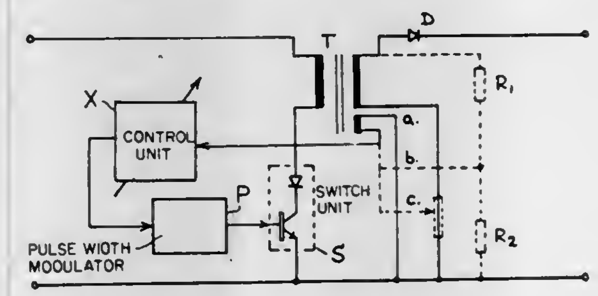

1. A method of converting a d.c. voltage of a first level to another voltage level comprising:
chopping said d.c. voltage level to form a plurality of input voltage pulses with a pulse unit;
applying said plurality of voltage pulses to a primary winding of a transformer, said transformer having a secondary winding for delivering pulses for forming a shifted voltage level;
sensing a cyclical resonance voltage of said transformer windings; and
controlling the off time of said plurality of input voltage pulses to produce a resonance voltage of said transformer windings having a predetermined phase relationship with respect to said plurality of input voltage pulses corresponding to a minimum power loss.

4,371,918

HIGH EFFICIENCY PUSH-PULL SATURATION CONVERTER

Rudolf Schierjott, Munich, Fed. Rep. of Germany, assignor to Siemens Aktiengesellschaft, Berlin & Munich, Fed. Rep. of Germany

Filed Feb. 27, 1981, Ser. No. 238,940

Claims priority, application Fed. Rep. of Germany, Mar. 7, 1980, 3008887

Int. Cl.³ H02M *3/335*

U.S. Cl. 363—22 **4 Claims**

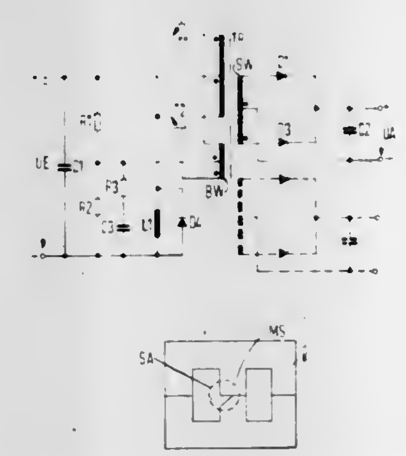

1. A push-pull saturation converter, comprising: a transformer having a primary winding, a base winding, and a secondary winding; two switching transistors connected to alternately charge the primary circuit of the transformer with a DC voltage; bases of said switching transistors being linked via the common base winding of the primary circuit; a choke with a diode connected in parallel being disposed in a common emitter circuit of the switching transistors; and a center leg of a core of the transformer bearing the winding of the transformer having at least one notch-like shaping restricting a cross section of a center leg of the core.

4,371,919

LOAD DISTRIBUTION AMONG PARALLEL DC-DC CONVERTERS

Michael W. Andrews, Whippany, and Carl J. Hoffmann, Morristown, both of N.J., assignors to Bell Telephone Laboratories, Incorporated, Murray Hill, N.J.

Filed Apr. 29, 1981, Ser. No. 258,679

Int. Cl.³ H02M *3/335*

U.S. Cl. 363—65 **8 Claims**

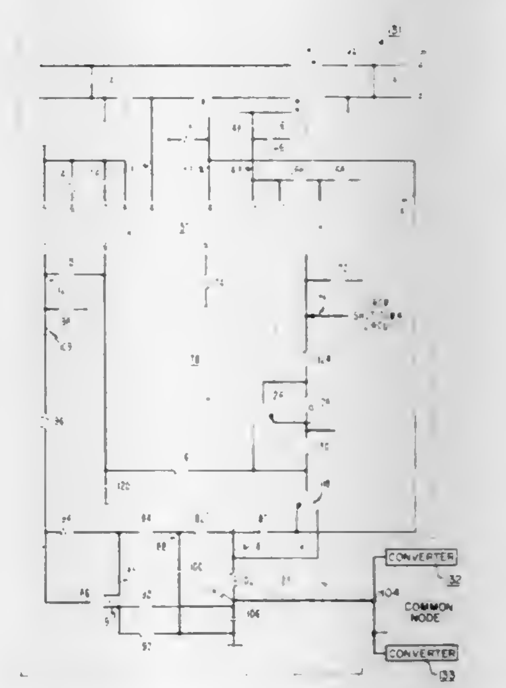

1. Apparatus for distributing load currents evenly among a plurality of parallel converters each of said converters comprising
a primary side comprising a primary winding (26) and a switching transistor (30) said switching transistor being switched on by a variable width drive pulse supplied to the gate of said switching transistor,
a secondary side comprising a secondary winding (34), for generating an output voltage, a load circuit connectable to said secondary winding thereby drawing a load current,
means (36) on said primary side of each of said converters for sensing a voltage representative of said output voltage and said load current, said representative voltage being used to produce said variable width drive pulse,
said load current distributing apparatus
characterized by
means (78) for producing a first average value of said variable width drive pulses for each of said converters,
means (104) for producing a second average value of said first average values from all of said converters,
means (86) for comparing said first and second average values for each of said converters, and
means in each of said converters (50) responsive to said comparison means (50) for varying the width of said drive pulses to said switching transistor (30).

4,371,920
POLYPHASE FREQUENCY CONVERTER WITH INDIVIDUALLY CURRENT-REGULATED OUTPUTS
Theodor Salzmann, Erlangen, Fed. Rep. of Germany, assignor to Siemens Aktiengesellschaft, Munich, Fed. Rep. of Germany
Filed Jul. 20, 1981, Ser. No. 284,997
Claims priority, application Fed. Rep. of Germany, Aug. 1, 1980, 3029320
Int. Cl.³ H02M *5/27*
U.S. Cl. 363—160 **3 Claims**

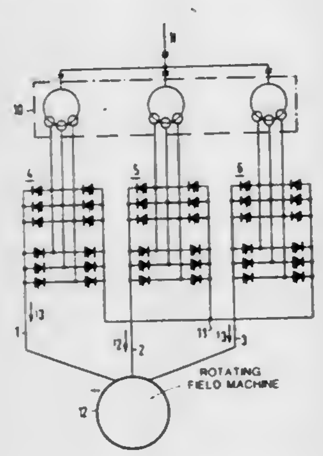

1. A circuit arrangement having a converter for supplying an m-phase load, the converter having *m* subconverters, each such subconverter having first and second AC voltage outputs, the first output of each subconverter being connected to a common converter neutral terminal, the arrangement further having a separate current regulator for impressing an output current with an integral signal component on each subconverter, each current regulator having inputs for respectively receiving a signal corresponding to the differnce between a reference value and an actual value of the subconverter output current, and an additional signal, the arrangement further comprising feedback resistor means for conducting the additional signal from the output of each current regulator to an input of the same current regulator.

4,371,921
INERTIAL INSTRUMENT WITH A TEMPORALLY DIGITIZED REBALANCE NETWORK
Glenn F. Cushman, Norfolk, Mass., assignor to Northrop Corporation, Los Angeles, Calif.
Continuation-in-part of Ser. No. 922,818, Jul. 10, 1978, Pat. No. 4,200,925. This application Apr. 28, 1980, Ser. No. 144,256
The portion of the term of this patent subsequent to Apr. 29, 1997, has been disclaimed.
Int. Cl.³ G06F *15/50*
U.S. Cl. 364—138 **5 Claims**

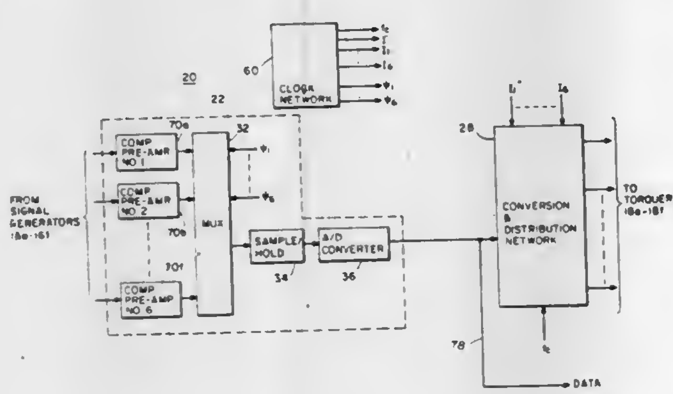

1. In a digital rebalance loop inertial instrument having an inertial sensor for each of at least one rebalance loop, each sensor having an associated means for generating a position signal and having an associated torquer means for applying a torquer to said sensor in response to an applied torquer signal, a rebalance network coupled to each said inertial sensor, said network comprising
digital torque correction means for generating a digital correction signal for each sensor comprising a succession of digital correction words, wherein each digital correction word in said succession is representative of the value of a torque signal to be applied to one of said sensor torquer means,
digital pulse width modulation means responsive to said succession of digital correction words for generating a corresponding succession of pulse width modulated, constant amplitude, digitally controlled, discretely timed torquer signals, and
means for applying said torquer signals to each said respective sensor torquer means.

4,371,922
PROCESS STEPPING SEQUENTIAL CONTROLLER
Teizo Fujita, Ibarakishi; Hidetaka Dohmoto, Suitashi, and Shigeru Toyoda, Ujishi, all of Japan, assignors to Izumi Denki Corporation, Osaka, Japan
Filed Aug. 11, 1980, Ser. No. 177,355
Claims priority, application Japan, Aug. 21, 1979, 54-106872
Int. Cl.³ G06F *15/46, 9/00*
U.S. Cl. 364—144 **6 Claims**

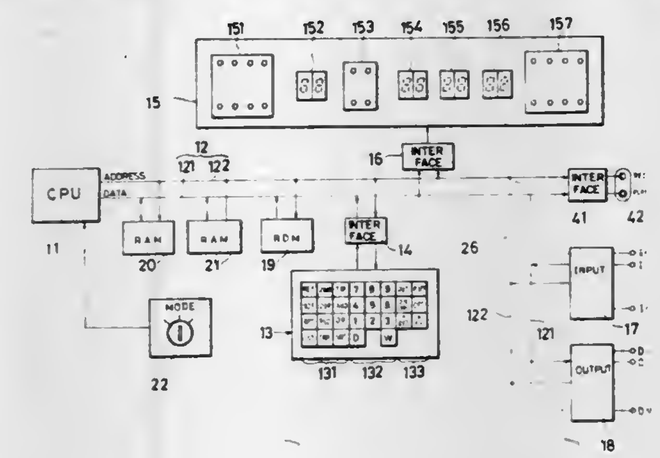

1. A process stepping sequential controller, which comprises:
a memory for programming which allows random writing thereto and reading out therefrom;
a process stepping counter for designating step numbers;
an input key for writing a program to said memory for programming, wherein said input key includes instruction keys, numeric keys and function keys;
a display unit for displaying an input from said input key and the items stored in said memory for programming, wherein said items include step number and the data stored for said step numbers;
said memory for programming including memory areas corresponding to each step of said process stepping counter, wherein each step area stores operation codes, codes representing the stepping condition of each program and output setting codes for commanding control in response to the satisfaction of said stepping condition;
said display unit including a representation of the type of said each operation and the content of data ~~previously~~ set with respect to each operation, wherein said representation is made in contrast; and
said process stepping counter proceeding to a subsequent specified process in response to the satisfaction of each stepping condition.

4,371,923
COMPUTER SYSTEM ARCHITECTURE
Gilbert P. Hyatt, P.O. Box 4584, Anaheim, Calif. 92803
Continuation of Ser. No. 101,881, Dec. 28, 1970, abandoned, which is a continuation-in-part of Ser. No. 879,293, Nov. 24, 1969, abandoned. This application Dec. 14, 1977, Ser. No. 860,257
Int. Cl.³ G06F *9/22*
U.S. Cl. 364—200 **3 Claims**

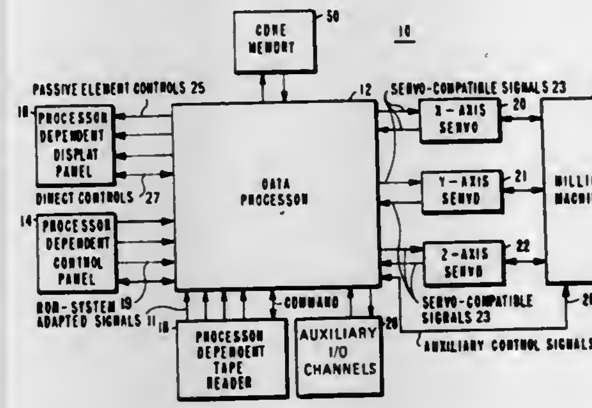

1. An integrated circuit data processor, said data processor including:
an integrated circuit read only main memory for storing a program, said main memory including a plurality of word locations assigned to a plurality of said main memory, each word location storing an instruction of said program
integrated circuit processing logic for processing input data in response to certain of said instructions of the program stored in said integrated circuit read main memory; and
integrated circuit read only main memory paging logic for selecting one of the plurality of pages of said main memory, said one selected page having included therein the word location of a certain instruction used in processing said data.

4,371,924
COMPUTER SYSTEM APPARATUS FOR PREFETCHING DATA REQUESTED BY A PERIPHERAL DEVICE FROM MEMORY
Marcus J. Schaefer, Plano, Tex., and George F. DeTar, Jr., Westminster, Colo., assignors to Rockwell International Corp., El Segundo, Calif.
Filed Nov. 9, 1979, Ser. No. 92,872
Int. Cl.³ G06F *7/00*
U.S. Cl. 364—200 **4 Claims**

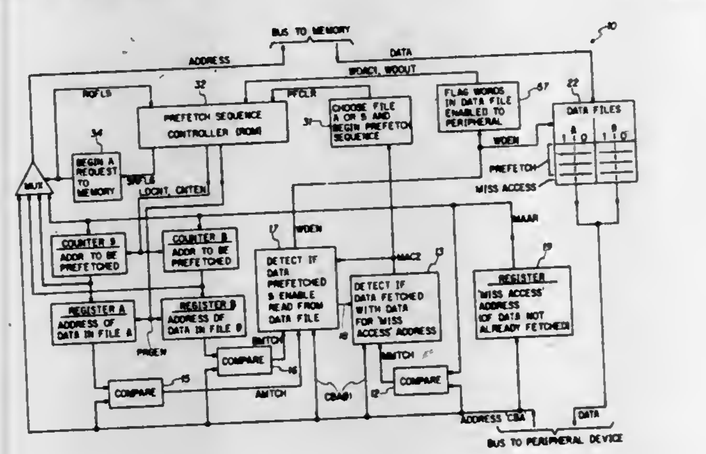

1. In a computer system, wherein a device on a peripheral bus makes requests for data from a memory, the improvement comprising:
means for serially receiving from said bus multiple addresses from which the data is requested by the device;
means for making a determination from said received addresses that a plurality of said addresses received serially from the bus form a subsequence of the sequence of addresses in said memory;
means for requesting and receiving selected data from memory, including means, responsive to said determination, for prefetching data from a memory address anticipated to be received from the bus as an extension of said subsequence, without waiting for said anticipated address to be received from the bus;
a data file;
means for storing data requested and received from said memory in said data file;
means for examining one of said serially received addresses to determine whether data from said examined address has been previously requested from said memory and received;
means responsive to said examining means for transferring, to the bus from the data file, data previously requested and received from the examined address; and
means for determining when sufficient storage space becomes available in the data file to receive a further entry of data from said memory, and thereupon initiating said prefetching of data from said memory to fill the space which has become available.

4,371,925
DATA PROCESSING SYSTEM HAVING UNIQUE BUS CONTROL OPERATION
Richard A. Carberry, Cupertino, Calif.; Michael B. Druke, Chelmsford, and Ronald I. Gusowski, Westboro, both of Mass., assignors to Data General Corporation, Westboro, Mass.
Filed Feb. 11, 1980, Ser. No. 120,271
Int. Cl.³ G06F *13/00, 3/04*
U.S. Cl. 364—200 **17 Claims**

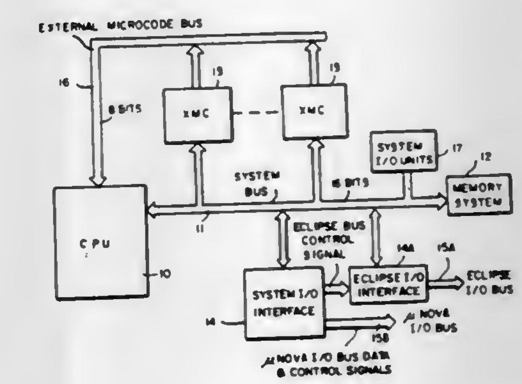

8. In a digital data system having a plurality of system units connected to a common bus, bus means for controlling access to said common bus, comprising:
means for generating two separate bus clock signals identifying a first time phase and a second time phase, respectively, and
bus interface means in each one of said system units, said bus interface means of each one of said system units including means responsive to a bus clock signal during said first time phase for (1) providing on said bus a first word identifying (a) an operation requested by said one of said system units and (b) another one of said system units requested to perform said operation and for (2) generating a first signal indicating that said first word is present on said bus, said first signal generating means, in response to the presence of said second time phase, being inhibited from generating said first signal during said second time phase;
means in other system units responsive to the presence of said first signal for inhibiting the placement of data on said common bus;
means at said one of said system units responsive to a bus clock signal during said second phase, and to a previous said first word requesting said operation to be performed by said another one of said system units, for (1) providing on said bus a second word for controlling the performance

of said operation and for (2) generating a second signal indicating that said second word is present on said bus; and

means in other system units responsive to the presence of said second signal for inhibiting the placement of a said first word on said common bus.

4,371,926

INPUT/OUTPUT INFORMATION INDICATION SYSTEM

Mitsuru Yamaura, Hachioji; Ryotaro Kondow, Tokyo; Junichi Inagaki, Fuchu, and Eiichi Okamoto, Tokyo, all of Japan, assignors to Tokyo Shibaura Denki Kabushiki Kaisha, Kawasaki, Japan

Filed Mar. 6, 1980, Ser. No. 127,844

Claims priority, application Japan, Mar. 9, 1979, 54-26777

Int. Cl.³ G06F *11/32*

U.S. Cl. 364—200 **4 Claims**

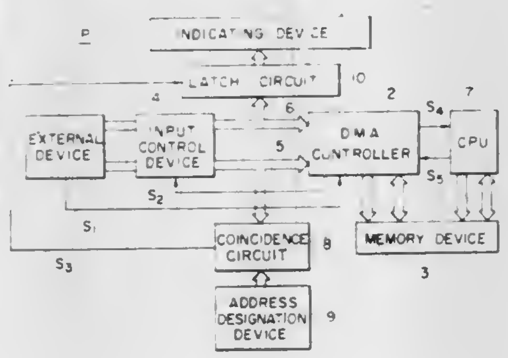

1. An input/output information indication system for a data processing system in which information transfer between an external device and a memory device coupled to a central processing unit is controlled by direct memory access, said data processing system including the central processing unit, the memory device, an input control device, a direct memory access controller for exercising direct memory access control over said memory device, and a bus system coupling the central processing unit and the memory device said bus system further coupling the direct memory access controller and the memory device another bus system including an address bus and a data bus coupling said direct memory access controller and the external device via the input control device, said direct memory access controller in response to a control signal transferring between the direct memory access controller and the central processing unit transferring an address and data, respectively, constituting input/output information between the memory device and the external device via the input control device independently of the operation of the central processing unit when said memory device is under direct memory access control of said direct memory access controller, said input/output information indication system comprising:

an address designation device for designating an address which corresponds to a memory location in the memory device when said memory device is under direct memory access control;

a coincidence circuit coupled to said address designation device for receiving said designated address therefrom and coupled to said address bus for receiving addresses corresponding to memory locations in the memory device appearing on said address bus when the memory device is under direct memory access control, and producing a coincidence signal when the address from said address designation device and an address present on said address bus coincide;

a latch circuit coupled to said coincidence circuit and said data bus for latching the data appearing on said data bus when said latch circuit receives the coincidence signal; and

an indicating device coupled to said latch circuit to receive latched data therefrom and indicate the same.

4,371,927

DATA PROCESSING SYSTEM PROGRAMMABLE PRE-READ CAPABILITY

John E. Wilhite, Glendale; William A. Shelly, and Charles P. Ryan, both of Phoenix, all of Ariz., assignors to Honeywell Information Systems Inc., Waltham, Mass.

Continuation of Ser. No. 853,944, Nov. 22, 1977, abandoned. This application Mar. 20, 1980, Ser. No. 131,739

Int. Cl.³ G06F *9/28*

U.S. Cl. 364—200 **36 Claims**

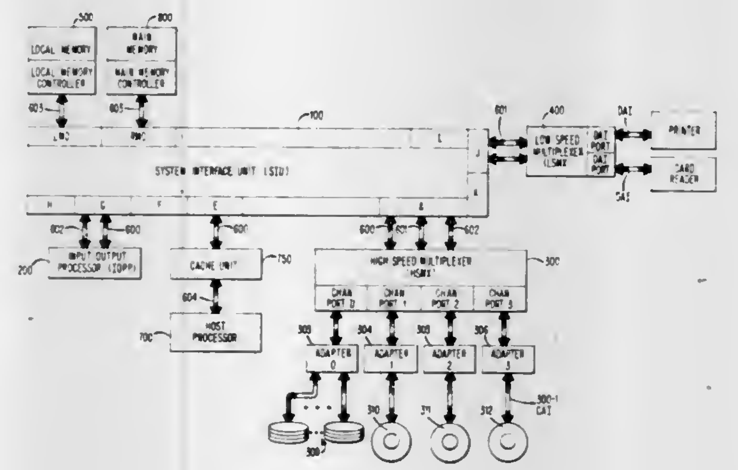

1. A data processing system comprising:

an addressable main store having a plurality of word locations for storing information including data and instructions;

high speed buffer storage means coupled to said main store for providing immediate access to data and instructions fetched from said main store and stored therein, said buffer storage means having a plurality of addressable locations, and said buffer storage means including control means for fetching said information from said main store in response to memory commands; and,

processing means coupled to said high speed buffer storage means, said processing means for processing a normal repertoire of instructions, each instruction including an operation code portion and a plurality of descriptor address portions, said processing means including control means for generating signals including said memory commands required for the execution of said instructions, said control means including decoder circuit means in response to signals indicative of said operation code portion of each type of instruction within said normal repertoire coded to specify an operation involving a plurality of operand data strings specified by said plurality of descriptor address portions which can be processed concurrently, being operation to generate memory command signals accompanied by a set of coded command signals specifying fetching in advance a predetermined segment of data of a first operand string specified by an address developed from a first one of said plurality of instruction descriptor address portions and

said buffer storage control means being operative in response to said set of coded command signals to generate signals for forwarding said memory command to said main store to fetch said segment of data when said predetermined segment specified by said memory command is not stored in said buffer storage means for storage in advance in said buffer storage means and enabling signals for conditioning said processing control means to continue to process another one of said plurality of descriptor address portions of said each type of instruction thereby increasing the efficiency of executing said each predetermined type of instruction.

4,371,928

INTERFACE FOR CONTROLLING INFORMATION TRANSFERS BETWEEN MAIN DATA PROCESSING SYSTEMS UNITS AND A CENTRAL SUBSYSTEM

George J. Barlow, Tewksbury; Philip E. Stanley, Westboro, and Richard P. Brown, Acton, all of Mass., assignors to Honeywell Information Systems Inc., Waltham, Mass.

Filed Apr. 15, 1980, Ser. No. 140,623

Int. Cl.³ G06F *13/00*

U.S. Cl. 364—200 **11 Claims**

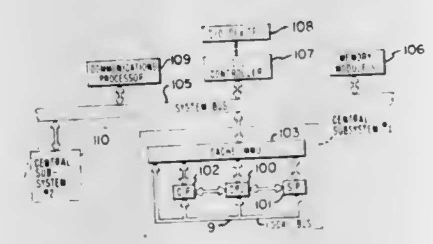

1. A data processing system comprising:

a system bus having a system data transfer path of a first bit width for the bidirectional transfer of data, control signals, and response signals;

a memory module subsystem comprising:

a first memory module having a unique identifier associated therewith and including a data path of said first bit width coupled to said system data transfer path, said first memory module for storing data in a plurality of memory locations, for performing data transfers with said system data transfer path through said first data path, and for generating response signals indicating the performance of a said data transfer by said first memory module;

a second memory module having a unique identifier associated therewith and including a second data path of a second bit width less than said first bit width coupled to said system data transfer path, said second memory module for storing data in a plurality of memory locations, for performing data transfers with said system data transfer path through said second data path, and for generating response signals indicating the performance of a said data transfer said by second memory module;

a central subsystem including subsystem processing means for supplying to said system bus for transmission to said first data path or said second data path original data transfers of said first bit width, each of said original data transfers including said identifier of said first memory module or said identifier of said second memory module; and

interface means for receiving said response signals generated by said memory module associated with said transferred identifier in response to a said original data transfer and for initiating additional data transfers when said received response signals indicate that said original data transfer had been made to said second memory module, said additional data transfers to enable the cumulative transfer of a number of data bits equal to said second bit width from said subsystem processing means to said second memory module.

4,371,929

MULTIPROCESSOR SYSTEM WITH HIGH DENSITY MEMORY SET ARCHITECTURE INCLUDING PARTITIONABLE CACHE STORE INTERFACE TO SHARED DISK DRIVE MEMORY

John J. Brann, Manassas, Va.; Charles S. Freer, Jr., Westminster, Md., and Warren W. Jensen, Warrenton, Va., assignors to IBM Corporation, Armonk, N.Y.

Filed May 5, 1980, Ser. No. 146,897

Int. Cl.³ G06F *13/00, 13/04, 13/08, 9/00*

U.S. Cl. 364—200 **12 Claims**

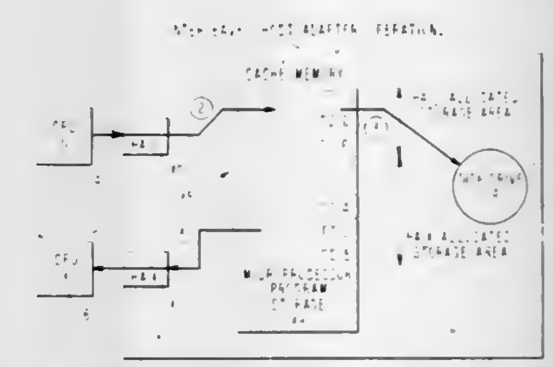

1. In a multiprocessing system, a partitionable cache store interface to a shared disk drive memory, comprising:

a cache storage memory having a data input and output connected to a data bus communicating in common with a plurality of distributed processors and with said disk drive memory, for storing data sets for each of said processors in mutually exclusive partitions;

a direct memory access (DMA) controller having a control line connected to each of said processors and to said disk drive memory, for receiving bus allocation demands from said processors and allocating time divided access for selected ones of said processors to said data bus for transferring data to or from corresponding ones of said partitions in said cache storage memory;

word counter in said DMA controller having an input connected to a selected processor, for counting the quantity of data stored in the corresponding partition of said cache storage memory and initiating a bus allocation demand for said disk drive memory to obtain time divided access to said data bus for transferring data from said corresponding partition to said disk drive memory;

whereby data can be transferred between said plurality of processors and said cache memory and between said cache memory and said disk drive memory on a time divided basis.

4,371,930

APPARATUS FOR DETECTING, CORRECTING AND LOGGING SINGLE BIT MEMORY READ ERRORS

Dongsung R. Kim, Laguna Hills, Calif., assignor to Burroughs Corporation, Detroit, Mich.

Filed Jun. 3, 1980, Ser. No. 156,113

Int. Cl.³ G06F *11/10;* **G11C** *29/00*

U.S. Cl. 364—200 **8 Claims**

1. In a data processing system, the combination comprising:

selectively addressable storage means including a plurality of memories;

addressing means for addressing a said memory to read out selected memory data therefrom, said selected memory data including a plurality of check bits chosen so as to permit determining whether at least a single bit error is present in the selected memory data;

local error detection and correction means, one for each memory, for detecting and correcting single bit memory read errors in selected memory data read from its respective memory in response to said check bits included therein and for automatically restoring corrected memory

data back into the respective memory address whenever a single bit memory read error is detected;

common error detection and correction means to which data read from each memory is applied without correction by its respective local error detection and correction means, said common error detection and correction means being operative in response to the check bits included in each selected memory data applied thereto to detect and correct single bit errors and to provide a single bit error signal each time a single bit error is detected in applied memory

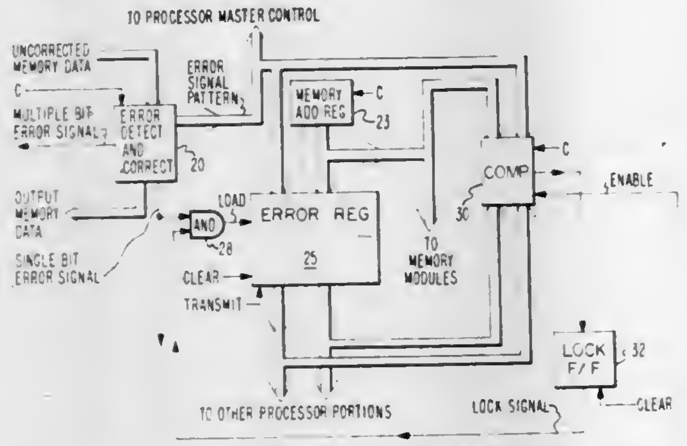

data along with a corresponding error signal pattern indicating the incorrect bit; and

selective error determining means constructed and arranged to operate in response to said single bit error signal, said addressing means, and said error signal pattern for indicating when a detected single bit error in data read from a memory is likely to be hardware related by determining whether this same error has been consecutively detected a predetermined plurality of times for the same memory area.

4,371,931

LINEAR MICRO-SEQUENCER FOR MICRO-PROCESSOR SYSTEM UTILIZING SPECIALIZED INSTRUCTION FORMAT

Robert D. Catiller, Garden Grove, and Brian K. Forbes, Huntington Beach, both of Calif., assignors to Burroughs Corporation, Detroit, Mich.

Continuation-in-part of Ser. No. 52,350, Jun. 27, 1979, Pat. No. 4,291,372. This application Mar. 5, 1981, Ser. No. 240,880

Int. Cl.[3] G06F *3/04, 9/30, 13/00, 9/00*

U.S. Cl. 364—200 **9 Claims**

1. A universal-type microprocessor system which cooperates with an application-dependent logic module to form a peripheral-controller capable of handling data transfers between main memory of a host computer and a plurality of peripheral terminal units which can be either "word-oriented" or "byte-oriented", and wherein said application-dependent logic module provides external register means having bus connections to said plurality of peripheral terminal units and to said host computer, and wherein said application-dependent logic module further includes an external memory for storage of programs related to control of said peripheral terminal units and for temporary storage of data undergoing transfer, and wherein said application-dependent logic module further includes control logic means for communicating with and controlling said external register means, said external memory and communicating with a decoder-controller in said microprocessor system, the said microprocessor system comprising:

(a) data processing means including:

(a1) an Arithmetic Logic Unit providing an output to a shift logic circuit and to a byte-swap circuit;

(a2) said shift logic circuit providing output to an I/O bus, said shift logic circuit functioning to rotate one or more bits of a word being processed to the right or to the left;

(a3) said byte-swap circuit providing output to said I/O bus, said byte-swap circuit functioning to exchange the sequential positions of the higher order byte and the lower order byte of a received two-byte word;

(b) said I/O bus providing connection lines from said data processing means to said external register means, to said external memory, to an accumulator register means, and to an addressing means;

(c) said addressing means receiving input data from said I/O bus and storing addresses useful for accessing data from an internal memory or said external memory, said addressing means including:

(c1) a program counter storing consecutive addresses of data located in said internal program memory;

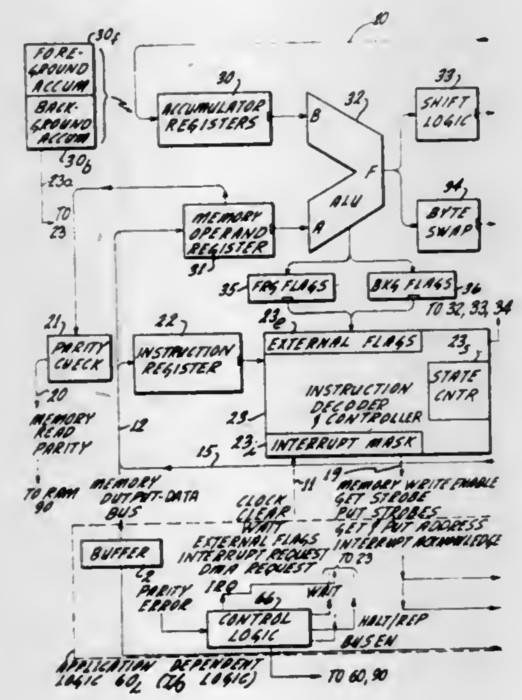

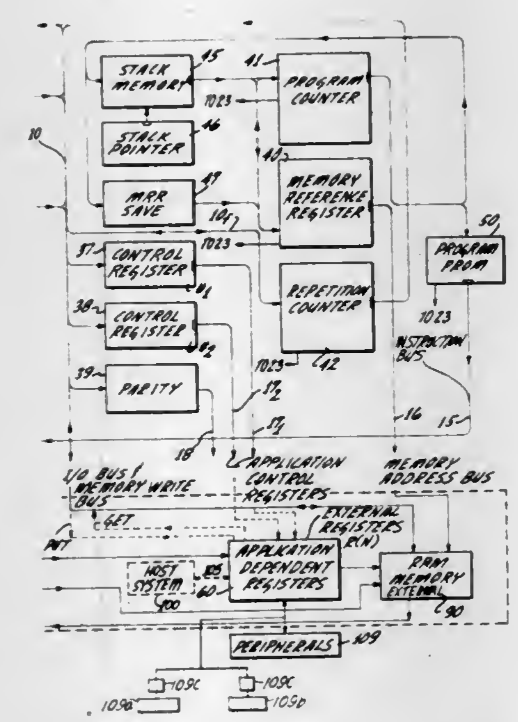

(c2) a memory reference register connected to said decoder-controller for storing addresses of data located in said external memory, and including:

(c2-1) a memory address bus which connects to the said external memory;

(c2-2) and wherein a dedicated nonaddress bit (byte-select bit) in said memory reference register being set to signal said decoder-controller to initiate a byte-swap operation in said byte-swap circuit, or when not-set, to pass data without a byte-swap operation;

(c2-3) a bus connection from said memory reference register to said decoder-controller;

(c3) an address register in said decoder-controller connecting by means of an address bus to an accumulator register means, which include a plurality of accumulator registers, for selection of an addressed accumulator register as a destination or as a source of data;

(d) said internal program memory for storing program instructions and data words, said internal memory being addressed from said program counter and providing instruction words and data, via an instruction bus, to an instruction register and memory operand register;

(e) register means for temporary storage of data, said register means including:

(e1) said plurality of addressable accumulator registers which provide an output to the input of said Arithmetic Logic Unit, said accumulator registers receiving input data words from said I/O bus;

(e2) said memory operand register for receiving operand data from said internal program memory via said instruction bus or from said external memory via an external memory data bus;

(e3) said instruction register for receiving instruction words from said internal program memory via said instruction bus and providing instruction words to said decoder-controller;

(f) said instruction decoder-controller receiving instruction signals from said instruction register and including incoming and outgoing control signal lines connected to said data processing means, to said addressing means, to said register means, to said internal and external memory means, to said external registers and said control logic means;

(f1) and wherein said decoder-controller further includes:

(f1o) linear sequencing means for selecting microinstructions for execution in a predetermined sequence said sequencing means including a microinstruction memory for storing microinstructions, said linear sequencing means including:

(f1o-1) a state counter connected to said microcode instruction memory for receiving count control signals from said microcode instruction memory, and for providing a first portion of address signals to said microcode instruction memory;

(f1o-2) input control lines from said instruction register to provide a second portion of address signals to said microcode instruction memory;

(f1o-3) and wherein said microcode instruction memory provides said microcode instructions for the output lines of said decoder-controller in response to said first and second address portions;

(f1a) connection means for receiving control signals from said control logic in said application-dependent logic module;

(f1b) address lines to said external register means for selecting a specific register;

(f1c) control lines for strobing address signals to said external register means;

(f1d) circuitry responsive to each data field of an instruction for executing the requirements of each of said data fields;

(g) said external memory data bus for carrying data from said external memory to said instruction register and said memory operand register;

(h) an instruction word format in said internal program memory which includes:

(h1) a basic function instruction field for initiating transfer of the contents of a selected register to another selected register or for selecting an Arithmetic Logic Unit operator or a program stack operator;

(h2) a variant function field for initiating selection of:

(i) an addressed external register for a GET operation or a PUT operation;

(ii) a particular function to be performed by said Arithmetic Logic Unit;

(iii) a condition test or program stack operator;

(h3) a destination field for:

(i) placement of data resulting from GET and Arithmetic Logic Unit operators;

(ii) placement of data resulting from PUT and Program Stack operators;

(h4) a source field for initiating selection of data for:

(i) an Arithmetic Logic Unit or PUT operation;

(ii) a GET operation;

(iii) a Program Stack operation;

(h5) a bit field for parity information;

(h6) a single bit field "M" for signaling said decoder-controller to select either said program counter or said memory reference register as an address source for operands of the current instruction;

(h7) a single bit field "C" for signaling said decoder-controller to initiate or not initiate the said Arithmetic Logic Unit to copy its output into said memory reference register.

4,371,932

I/O CONTROLLER FOR TRANSFERRING DATA BETWEEN A HOST PROCESSOR AND MULTIPLE I/O UNITS

John M. Dinwiddie, Jr., Loxahatchee; Bobby J. Freeman, Boynton Beach; Timothy Jackson, Coral Springs, all of Fla., and William L. Zipoy, Austin, Tex., assignors to International Business Machines Corp., Armonk, N.Y.

Continuation of Ser. No. 62,263, Jul. 30, 1979, abandoned. This application Nov. 25, 1981, Ser. No. 325,151

Int. Cl.[3] G06F *13/00*

U.S. Cl. 364—200 **12 Claims**

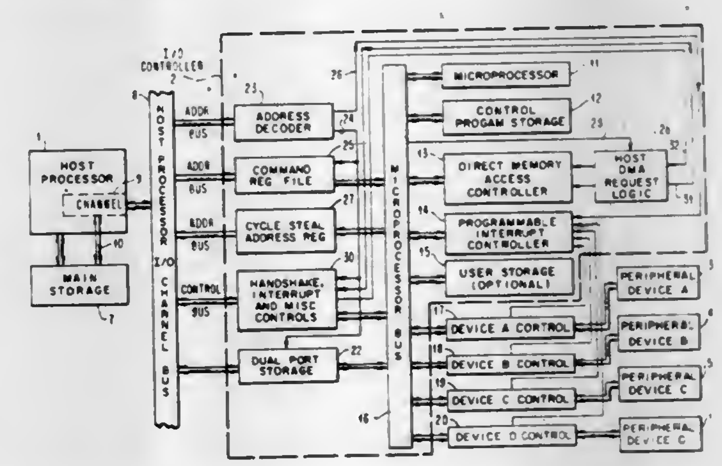

1. An I/O controller for transferring data between an I/O unit and a host processor having a main storage unit and comprising:

a random access controller storage unit located in the I/O controller for storing data;

first selectively operable data transfer circuitry for providing a data transfer path between the host processor and the controller storage unit;

second selectively operable data transfer circuitry for providing a data transfer path between the controller storage unit and the I/O unit;

first storage accessing circuitry for supplying addresses to the controller storage unit and selection signals to the second data transfer circuitry for enabling the transfer of data between the controller storage unit and the I/O unit;

cycle steal storage accessing circuitry for supplying host processor main storage addresses to the host processor, controller storage addresses to the controller storage unit and selection signals to the first data transfer circuitry for enabling the transfer of data words between the host processor and the controller storage unit in a cycle steal data transfer mode wherein a plurality of data words are automatically transferred by the I/O controller without need for individual word I/O commands from the host processor;

direct command storage accessing circuitry responsive to

addresses received from the host processor for supplying addresses to the controller storage unit and selection signals to the first data transfer circuitry for enabling the transfer of data words between the host processor and the controller storage unit in a direct command data transfer mode wherein one data word is transferred for each I/O command issued by the host processor;

and interleaving control circuitry coupled to the second and third storage accessing circuitry for enabling the transfer of a data word to be transferred in the direct command data transfer mode to be interleaved between the transfer of two data words being transferred in the cycle steal data transfer mode.

4,371,933

BI-DIRECTIONAL DISPLAY OF CIRCULAR ARCS

Jack E. Bresenham, Chapel Hill, N.C.; Donald G. Grice, Kingston, and Shing-Chou Pi, Poughkeepsie, both of N.Y., assignors to International Business Machines Corporation, Armonk, N.Y.

Filed Oct. 6, 1980, Ser. No. 194,522

Int. Cl.³ G06F *15/31, 3/153*

U.S. Cl. 364—300 **6 Claims**

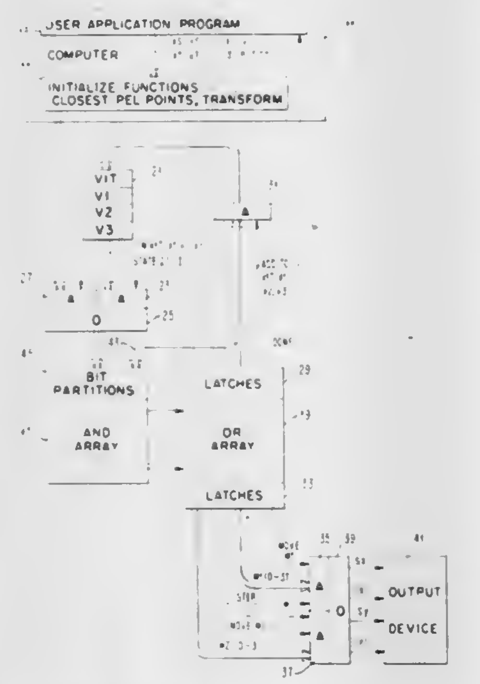

1. A graphic output system for creating a portion of a circular arc on an incremental Cartesian coordinate output device comprising:

a computer for establishing initialization parameters from specifications of a circular arc supplied by a graphic application program;

logic for testing an octant transition count for a termination octant;

logic for testing for an end point in said termination octant;

logic for testing for an octant boundary;

logic to reinitialize at least some of said intial parameters at each octant boundary;

logic for selecting a unit direction for an incremental output movement;

logic for modifying at least some of said initial parameters;

and output means for moving in said selected unit direction.

4,371,934

VEHICLE TRIP COMPUTER

Josef Wahl, Stuttgart; Peter-Jürgen Schmidt, Schwieberdingen; Jörg Birmelin, Bretten; Ferdinand Grob, Besigheim; Rolf Kohler, Trossingen; Erich Zabler, Karlsruhe; Frieder Heintz, Stutensee; Wolfgang Bremer; Viktor Köpernick, both of Ettlingen; Robert Hugel, Stutensee-Friedrichsthal; Andreas Weigl, Ettlingen, and Günther Baumann, Stuttgart, all of Fed. Rep. of Germany, assignors to Robert Bosch GmbH, Stuttgart, Fed. Rep. of Germany

Filed Apr. 16, 1980, Ser. No. 140,797

Claims priority, application Fed. Rep. of Germany, May 4, 1979, 2917957; Jan. 17, 1980, 3001470

Int. Cl.³ G06F *3/14*

U.S. Cl. 364—424 **25 Claims**

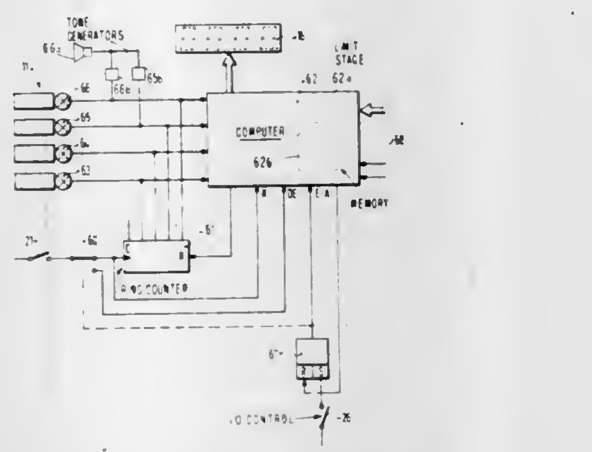

1. In combination with an automotive vehicle,

a vehicle trip computer having

an optical display device (**10, 41**) for indicating and presenting data, including

a numerical display device (**16**) for the display of numerical values and

a plurality of display fields, each characterizing and identifying the significance or import of the displayed numerical value, on said numerical display device;

an operating component (**20, 50**) for entry and/or retrieval of data including a plurality of keys (**20–25**);

a data supply computer (**62**) furnishing a plurality of numerical values, representative of operating parameters and information data relative to at least the then existing operation of the vehicle;

the display fields being adjacently positioned and located in groups or sets (**11–15; 42–45**);

one key (**21–25**), each, being assigned to each group or set;

counter means (**61**) connected to the keys and counting the number of times a key is operated, each key operation being associated with a selected operating parameter relative to at least the then existing operation of the vehicle, or a selected significant information item;

signal transmission link means connecting respective ones of the count output of the counter means to

(a) the data supply computer to provide outputs for display on the display device (**16**) of numerical values pertaining to the selected operating parameter of the selected significant information item, and

(b) to respective display fields of the group, or set, associated with a respective count to sequentially switch display of a specific display field in the display fields in the group, or set, upon repeated operation of a single key,

whereby the optical display device will display

(a) on the numerical display device, a numerical value representative of the selected operating parameter, or information item selected by a respective key and the respective number of operations of the key, and

(b) on the display fields, a representation of the parameter, or the significance of the information item being shown in form of a numerical value on the numerical display device (**16**) upon operation of only a single key; and wherein

the groups or sets (**11–15; 42–45**) of the display fields are disposed in a predetermined geometric layout:

and the keys (**21–25**) associated with the sets or groups of said display fields are located in a layout having a similar geometric configuration.

4,371,935

NAVIGATION INSTRUMENT

Kiyoshi Yamaki, Yokohama, Japan, assignor to Nissan Motor Company, Limited, Yokohama, Japan

Continuation of Ser. No. 58,770, Jul. 19, 1979, abandoned. This application Dec. 8, 1980, Ser. No. 214,237

Claims priority, application Japan, Sep. 29, 1978, 53-119963

Int. Cl.³ G06F *15/50*

U.S. Cl. 364—424 **18 Claims**

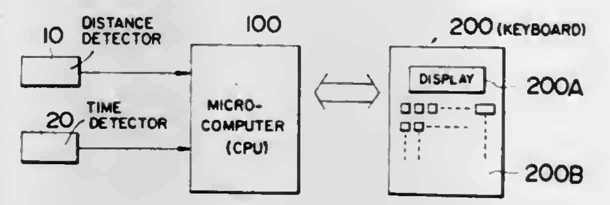

1. A navigation instrument for use with a roadway vehicle, comprising:

(a) distance detector means for providing a signal representative of the distance of travel of the vehicle from a starting point;

(b) time detector means for providing a signal representative of the length of time it takes the vehicle to travel said distance;

(c) speed setting means for providing a signal representative of a scheduled average speed;

(d) arithmetic means responsive to said vehicle travelling distance and time representative signals and said scheduled average speed representative signal for providing three data signals representative of the average speed of the vehicle, the deviation of travelling distance from a scheduled one, and the deviation of the travelling time from a scheduled one;

(e) signal generator means for providing a data-unavailability indicative signal;

(f) control means responsive to said vehicle travelling distance representative signal from said distance detector for providing a first control signal when the vehicle travelling distance is shorter than a predetermined level and a second control signal when it is longer than said predetermined level;

(g) signal selector means responsive to said first control signal for passing said data-unavailability indicative signal and responsive to said second control signal for sequentially passing said data signals fed thereto from said arithmetic means; and

(h) display means responsive to each signal applied thereto from said signal selector means for displaying the content represented by the signal.

4,371,936

ATTITUDE TRIMMED AIRSPEED/ATTITUDE CONTROLS

Don L. Adams, Fairfield; William C. Fischer, Monroe; Stuart C. Wright, Milford, and David J. Verzella, Guilford, all of Conn., assignors to United Technologies Corporation, Hartford, Conn.

Filed Mar. 30, 1981, Ser. No. 249,267

Int. Cl.³ G06F *15/50;* B64C *11/00*

U.S. Cl. 364—434 **3 Claims**

1. A system for positioning pitch-attitude-controlling aerodynamic surfaces of an aircraft, comprising:

control means responsive to force applied by a pilot to position said aerodynamic surfaces;

actuator means selectively engageable to said control means responsive to a command input signal applied thereto for positioning said control means;

trim release means selectively operable by the pilot of the aircraft to disengage said actuator means from said control means and for providing a trim release signal indicative thereof;

pitch attitude means for providing an attitude signal indicative of the actual attitude of the aircraft in its pitch axis;

airspeed means for providing an airspeed signal indicative of actual aircraft airspeed; and

signal processing means, responsive to said pitch attitude means, said airspeed means, and said trim release means for providing, during the presence of said trim release signal, an attitude reference signal indicative of the attitude desired for the aircraft in said pitch axis in response to said actual attitude signal, for providing an airspeed reference signal indicative of a desired airspeed for the aircraft, for selectively providing an airspeed engage signal indicative of the fact that control of said actuator means includes

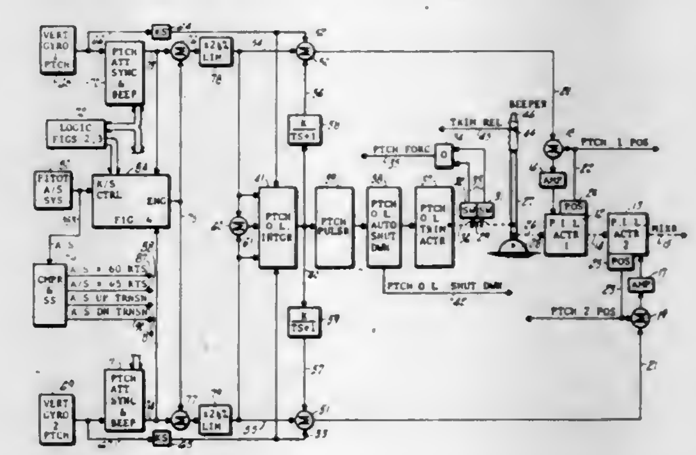

commands for attaining said desired airspeed, for providing an attitude error signal indicative of the difference between said attitude reference signal and said actual attitude signal, for providing an airspeed error signal indicative of the difference between said airspeed signal and said airspeed reference signal, for alternatively providing to said actuator means a pitch attitude command signal indicative of a desired change in aircraft pitch attitude in response to said attitude error signal when said airspeed engage signal is not present, or in response to both said attitude error signal and said airspeed error signal when said airspeed engage signal is present;

characterized by said signal processing means comprising means responsive to said trim release signal for providing said attitude reference signal substantially identical to said actual attitude signal and for providing said airspeed reference signal substantially identical to said airspeed signal during the presence of said trim release signal and for a predetermined period of time following termination of said trim release signal.

4,371,937

RETAINING AIRSPEED HOLD ENGAGEMENT IN LOW SPEED MANEUVER

Don L. Adams, Fairfield; William C. Fischer, Monroe; Stuart C. Wright, Milford, and David J. Verzella, Guilford, all of Conn., assignors to United Technologies Corporation, Hartford, Conn.

Filed Mar. 30, 1981, Ser. No. 249,268

Int. Cl.³ G06F *15/50;* B64C *11/00*

U.S. Cl. 364—434 **2 Claims**

1. A system for positioning pitch-attitude-controlling aerodynamic surfaces of an aircraft, comprising:

control means responsive to force applied by a pilot to position said aerodynamic surfaces;

means responsive to said control means for providing a force signal indicative of the pilot applying force to said control means;

pitch attitude means for providing an attitude signal indicative of the actual attitude of the aircraft in its pitch axis;
airspeed means for providing an airspeed signal indicative of actual aircraft airspeed;
actuator means responsive to a command input signal applied thereto for positioning said aerodynamic surfaces; and
signal processing means, responsive to said pitch attitude means and said airspeed means, for providing a pitch reference signal indicative of the pitch attitude desired for the aircraft, for providing an airspeed reference signal indicative of a desired airspeed for the aircraft, for selectively providing an airspeed engage signal indicative of the fact that control of said actuator means includes commands for attaining said desired airspeed, for providing an attitude error signal indicative of the difference between said pitch reference signal and said actual attitude signal, for providing an airspeed error signal indicative of the

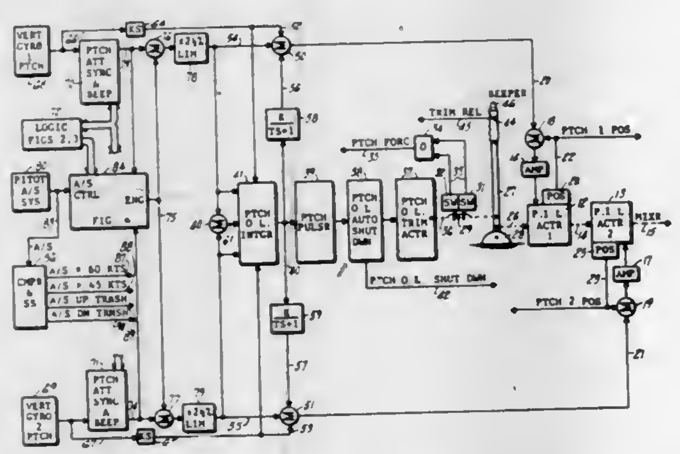

difference between said airspeed signal and said airspeed reference signal, for alternatively providing to said actuator means a pitch attitude command signal indicative of a desired change in aircraft pitch attitude in response to said attitude error signal when said airspeed engage signal is not present, or in response to both said attitude error signal and said airspeed error signal when said airspeed engage signal is present;
characterized by said signal processing means comprising means for providing said airspeed engage signal in response to said airspeed signal indicating an airspeed in excess of a predetermined threshold magnitude, and for thereafter continuing to provide said airspeed engage signal even if said airspeed signal indicates an airspeed less than said predetermined magnitude in concurrent response to the presence of said airspeed engage signal and said force signal so long as said airspeed error signal is in excess of a predetermined magnitude.

4,371,938
AUTOMATIC AIRSPEED ENGAGE/DISENGAGE
Stuart C. Wright, Milford; Don L. Adams, Fairfield; William C. Fischer, Monroe, and David J. Verzella, Guilford, all of Conn., assignors to United Technologies Corporation, Hartford, Conn.
Filed Mar. 30, 1981, Ser. No. 249,269
Int. Cl.³ G06F *15/50;* **B64C** *11/00*
U.S. Cl. 364—434 **4 Claims**

1. A system for positioning pitch-attitude-controlling aerodynamic surfaces of an aircraft, comprising:
control means responsive to force applied by a pilot to position said aerodynamic surfaces;
pitch attitude means for providing an attitude signal indicative of the actual attitude of the aircraft in its pitch axis;
airspeed means for providing an airspeed signal indicative of actual aircraft airspeed;
actuator means responsive to a command input signal applied thereto for positioning said aerodynamic surfaces; and
signal processing means, responsive to said pitch attitude means and said airspeed means for providing a pitch reference signal indicative of the pitch attitude desired for the aircraft, for providing an airspeed reference signal indicative of a desired airspeed for the aircraft, for selectively providing an airspeed engage signal indicative of the fact that control of said actuator means includes commands for attaining said desired airspeed, for providing an attitude error signal indicative of the difference between said pitch reference signal and said actual attitude signal, for providing an airspeed error signal indicative of the difference between said airspeed signal and said airspeed reference signal, for alternatively providing to said actuator means a pitch attitude command signal indicative of a desired change in aircraft pitch attitude in response to said attitude

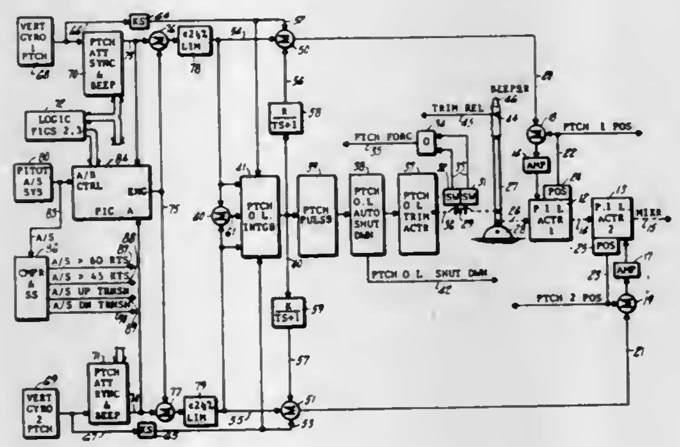

error signal when said airspeed engage signal is not present, or in response to both said attitude error signal and said airspeed error signal when said airspeed engage signal is present;
characterized by said signal processing means comprising means for providing said airspeed engage signal in response to said airspeed signal indicating an airspeed in excess of a predetermined threshold magnitude, and for thereafter continuing to provide said airspeed engage signal even if said airspeed signal indicates an airspeed less than said predetermined magnitude in concurrent response to the presence of said airspeed engage signal and said pitch attitude command signal indicating a desired change in aircraft pitch attitude in excess of a preestablished magnitude.

4,371,939
ROLL ATTITUDE INHIBIT OF AIRCRAFT COORDINATED TURN DISENGAGEMENT
Don L. Adams, Fairfield; William C. Fischer, Monroe; Stuart C. Wright, Milford, and David J. Verzella, Guilford, all of Conn., assignors to United Technologies Corporation, Hartford, Conn.
Filed Mar. 30, 1981, Ser. No. 249,271
Int. Cl.³ G06F *15/50;* **B64C** *11/00*
U.S. Cl. 364—434 **2 Claims**

1. An aircraft automatic flight control system, comprising:
yaw means for providing a yaw rate signal indicative of rate of rotation of the aircraft about its yaw axis;
directional gyro means for providing a heading error signal indicative of the deviation of aircraft heading from a desired heading;
roll rate means for providing a roll rate signal indicative of the rate of rotation of the aircraft about its roll axis;
acceleration means for providing a lateral acceleration signal indicative of lateral acceleration of the aircraft;
airspeed means providing an airspeed signal indicative of the aircraft having in excess of a threshold speed;
heading hold means having two states and operable in a first one of said states to indicate a heading mode of operation, said means being selectively settable by the pilot of the aircraft into the second one of said states;

means for providing a flight director engaged signal indicative of engagement of an automatic roll steering function of the automatic flight control system;
yaw trim actuator means for positioning the yaw-axis-controlling aerodynamic surfaces of the aircraft in response to yaw command signals applied thereto; and
signal processing means responsive to said yaw means, said directional gyro means, said roll means, said acceleration means, and said pilot operable means, for providing a heading hold mode signal in response to said heading hold means being in said first state, for providing heading hold yaw command signals to said actuator means as a function of said yaw rate signal and said heading error signal in the

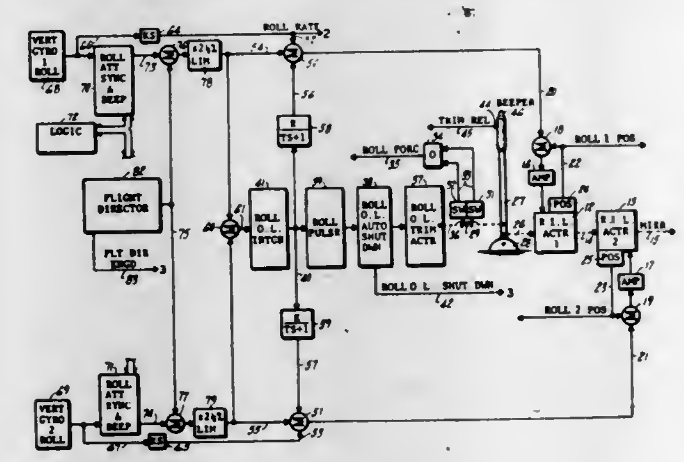

presence of said heading hold mode signal and for providing turn coordinating yaw command signals as a function of said roll rate signal and said lateral acceleration signal in response to the presence of said airspeed signal concurrently with the absence of said heading hold mode signal;
characterized by said signal processing means comprising means for providing said heading hold mode signal in response to said heading hold means being in said first state concurrently with the absence of said flight director engaged signal, whereby said signal processing means provides said turn coordinating yaw command signals in the presence of said flight director engage signal concurrently with said airspeed signal.

4,371,940
NAVIGATION INSTRUMENT
Kiyoshi Yamaki, Yokohama; Masanori Mizote; Hitoshi Takeda, both of Yokosuka; Hidetaka Suzuki, Yokohama; Hiroyuki Nomura, Fujisawa; Teruo Kawasaki, and Kazuyuki Mori, both of Yokohama, all of Japan, assignors to Nissan Motor Co., Ltd., Kanagawa, Japan
Continuation of Ser. No. 158,822, Jun. 12, 1980, abandoned. This application Jul. 30, 1981, Ser. No. 288,453
Claims priority, application Japan, Jun. 14, 1979, 54-75457
Int. Cl.³ G01C *21/20, 23/00*
U.S. Cl. 364—444 **20 Claims**

1. In a navigation instrument for use with a road way vehicle, comprising:
(a) distance detector means producing a signal showing the distance of travel of the vehicle from a starting point;
(b) time detector means producing a signal showing the length of time it takes the vehicle to travel said distance;
(c) speed setting means producing a signal showing a scheduled average speed;
(d) arithmetic means responsive to said vehicle travelling distance and time showing signals and said scheduled average speed showing signal, and producing three data signals showing the average speed of the vehicle, the deviation of the travelling distance from a scheduled one, and the deviation of the travelling time from a scheduled one;
(e) signal selector means responsive to a data selector command from said arithmetic means, and sequentially outputting one of said three data signals from said arithmetic means;
(f) display means responsive to each signal applied thereto from said signal selector means for displaying the content represented by the signal,
the improvement wherein said arithmetic means includes
(i) travelling distance deviation accumulating means for adding the deviation of the travelling distance with respect to the average speed initially set by said setting means to the deviations of the travelling distance when-

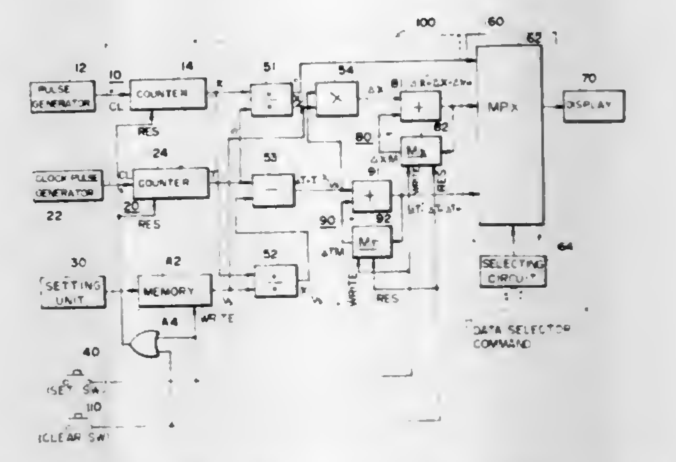

ever said average speed is altered, and means for feeding data showing the accumulated deviation of the travelling distance to said display means through said signal selector means; and
(ii) travelling time deviation accumulating means for adding the deviation of the travelling time with respect to the average speed initially set by said setting unit to the deviations of the travelling time whenever said average speed is altered, and means for feeding data showing the accumulated deviation of the travelling time to said display means through said signal selector means.

4,371,941
CONTROL APPARATUS FOR ROLL GRINDERS
Ronald J. Gordiski, Ansonia; Robert G. Bennett, Jr., Seymour; Alfred T. Parrella, Newtown, and Michael Bagnall, Southbury, all of Conn., assignors to USM Corporation, Farmington, Conn.
Filed Dec. 31, 1979, Ser. No. 108,338
Int. Cl.³ G05B *19/18;* **G06F** *15/46*
U.S. Cl. 364—475 **46 Claims**

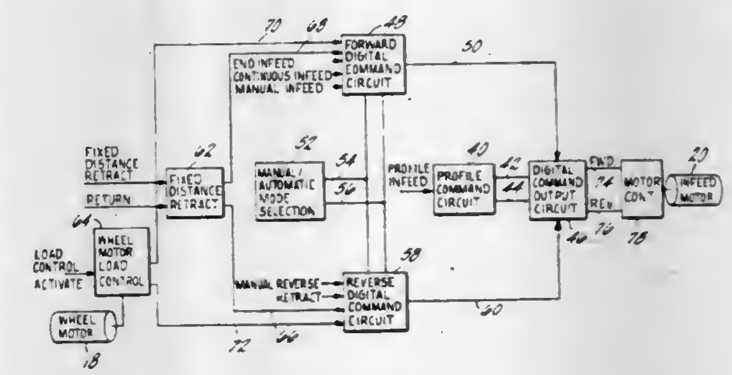

1. In a roll grinding machine, a system for controlling the infeed positioning of a grinding wheel relative to the roll, said system comprising:
means for generating a set of infeed positioning signals which respectively define inward and outward motions of the grinding wheel;
means for generating a first additional infeed positioning signal which is to be combined with the infeed positioning signal defining inward motion of the grinding wheel;
means for generating a second additional infeed positioning

signal which is to be combined with the infeed positioning signal defining outward motion of the grinding wheel; and

means, responsive to said first set of infeed positioning signals and said first and second additional infeed positioning signals, for moving the grinding wheel.

4,371,942
METHOD AND APPARATUS FOR CONTROLLING AN AUTOMATIC SET-UP CYCLE OF OPERATION
Gerasimos Damikolas, West Chester, Ohio, assignor to Cincinnati, Milacron Inc., Cincinnati, Ohio
Filed Mar. 18, 1981, Ser. No. 245,045
Int. Cl.³ G06F *15/46*
U.S. Cl. 364—475 11 Claims

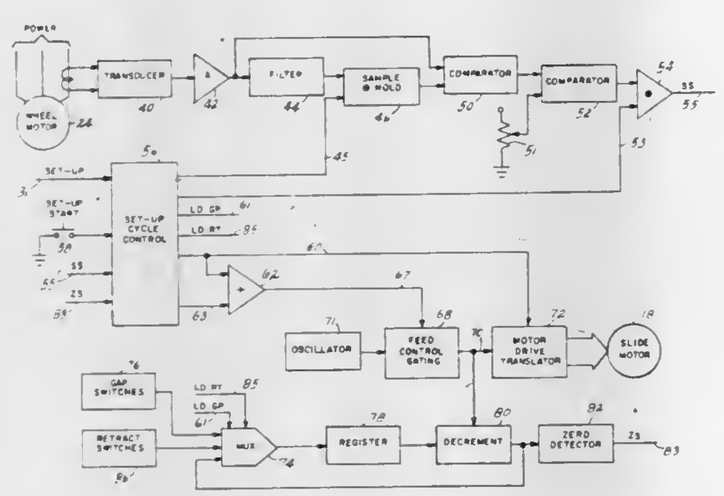

1. A control apparatus connected to a machine having a base supporting a workpiece, a cutting tool, a machine slide and a slide drive connected to the control apparatus for producing relative motion between the cutting tool and the workpiece, said control apparatus executing a set-up cycle of operation to establish a predetermined positional relationship between the cutting tool and the workpiece prior to executing a machining cycle of operation, the control apparatus comprising:

(a) means for selectively storing a final position signal representing a final position of the cutting tool relative to the workpiece;

(b) means for initiating a set-up cycle of operation;

(c) means responsive to the initiating means for producing a forward signal to cause the cutting tool and the workpiece to move into superficial contact;

(d) means for generating a sense signal in response to the superficial contact between the cutting tool and the workpiece;

(e) means responsive to the generating means for producing a reverse signal to cause the cutting tool and the workpiece to move apart in response to the sense signal; and

(f) means responsive to the storing means for stopping motion of the cutting tool at the final position in response to the final position signal thereby establishing the predetermined positional relationship between the cutting tool and the workpiece.

4,371,943
EXTERNAL MEANS FOR DETECTING NORMAL ZONES IN SUPERCONDUCTING MAGNETS OR COILS
Eugene L. Woods, and Gustav D. Magnuson, both of San Diego, Calif., assignors to General Dynamics Corporation/Convair Div., San Diego, Calif.
Filed Oct. 6, 1980, Ser. No. 194,566
Int. Cl.³ G06F *15/20;* G01N *27/02;* G01R *27/08*
U.S. Cl. 364—481 10 Claims

7. In a circuit including a cryostat in which a magnet/coil is made superconducting and further including a power supply, means for detecting normal zones in said superconducting coil comprising;

means outside said cryostat for deriving a signal representative of the voltage applied to said magnet/coil,

means outside said cryostat for deriving a signal representative of the current applied to said magnet/coil,

means for combining said voltage and current representative signals into a signal representative of the energy consumed by the coil,

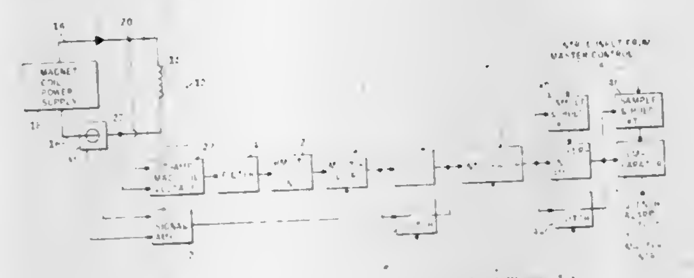

means for sampling said energy consumed representative signals as a value of energy consumed in one time period and comparing this value with the value of an energy consumed signal in a prior equal time period to determine any change in energy as a means for detecting normal zones forming in said coil.

4,371,944
ETHYLENE PROCESS CONTROL
William S. Stewart; Gary L. Funk, and Dexter E. Smith, all of Bartlesville, Okla., assignors to Phillips Petroleum Company, Bartlesville, Okla.
Filed Jan. 16, 1981, Ser. No. 225,508
Int. Cl.³ G06F *15/46;* C10G *9/36*
U.S. Cl. 364—502 14 Claims

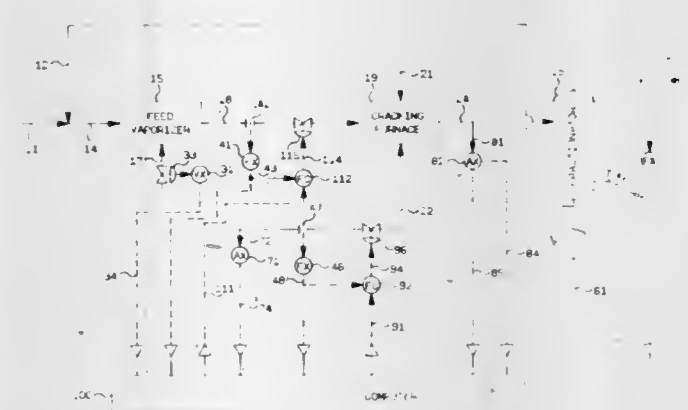

1. Apparatus comprising:

a cracking furnace means;

means for supplying a feed stream to said cracking furnace means;

means for supplying a diluent fluid to said cracking furnace means, said diluent fluid being combined with said feed stream;

means for supplying a fuel to said cracking furnace means, the combustion of said fuel supplying heat to said cracking furnace means;

a fractional distillation column means;

means for removing a gaseous mixture, containing the cracked components of said feed stream and containing said diluent fluid, from said cracking furnace means and for providing desired components of said gaseous mixture as a feed to said fractional distillation column means;

means for removing an overhead stream containing ethylene from said fractional distillation column means;

means for establishing a first signal representative of the actual flow rate of said overhead stream;

means for establishing a second signal representative of the desired flow rate of said overhead stream;

means for comparing said first signal and said second signal

and for establishing a third signal responsive to the difference between said first signal and said second signal;

means for establishing a fourth signal representative of the actual heat being supplied to said cracking furnace means;

means for comparing said third signal and said fourth signal and for establishing a fifth signal which is responsive to the difference between said third signal and said fourth signal;

means for manipulating the heat input to said cracking furnace means in response to said fifth signal;

means for establishing a sixth signal representative of the ratio of the concentration of an undesired component in said gaseous mixture to the concentration of ethylene in said gaseous mixture (severity equivalent);

means for establishing a seventh signal representative of the desired severity equivalent;

means for comparing said sixth signal and said seventh signal and for establishing an eighth signal responsive to the difference between said sixth signal and said seventh signal; and

means for manipulating the flow rate of said feed stream to said cracking furnace means in response to said eighth signal.

4,371,945
ELECTRONIC PEDOMETER
Lawrence J. Karr, 220 Horizon St., Venice, Calif. 90291; Gary L. Wasserman, 2669 Rambla Pacifico, Malibu, Calif. 90265, and George R. Boehme, Venice, Calif., assignors to Lawrence Joseph Karr and Gary Lee Wasserman, both of Marine del Rey, Calif.
Filed Dec. 1, 1980, Ser. No. 211,684
Int. Cl.³ G01C *22/00*
U.S. Cl. 364—561 15 Claims

2. A pedometer comprising measurement means for measuring the maximum distance between the user's legs for each step taken by the user, means responsive to the measurement means for determining the stride length for each step taken by the user, means for adding together the stride lengths over a plurality of steps, and means for displaying a sum of the stride lengths over the plurality of steps, and in which the measurement means for measuring the maximum distance between the user's legs includes:

means positioned on one leg of the user for emitting ultrasonic energy;

means positioned on the other leg of the user for detecting the emitted ultrasonic energy; and

means responsive to the means for detecting the emitted ultrasonic energy for determining the maximum distance between the user's legs.

4,371,946
SERVOMECHANISM FOR DOPPLER SHIFT COMPENSATION IN OPTICAL CORRELATOR FOR SYNTHETIC APERTURE RADAR
Nicholas J. Constantinides, and Thomas J. Bicknell, both of Pasadena, Calif., assignors to The United States of America as represented by the Administrator of the National Aeronautics and Space Administration, Washington, D.C.
Filed Oct. 9, 1980, Ser. No. 195,547
Int. Cl.³ G01S *13/90;* G06G *7/66*
U.S. Cl. 364—822 16 Claims

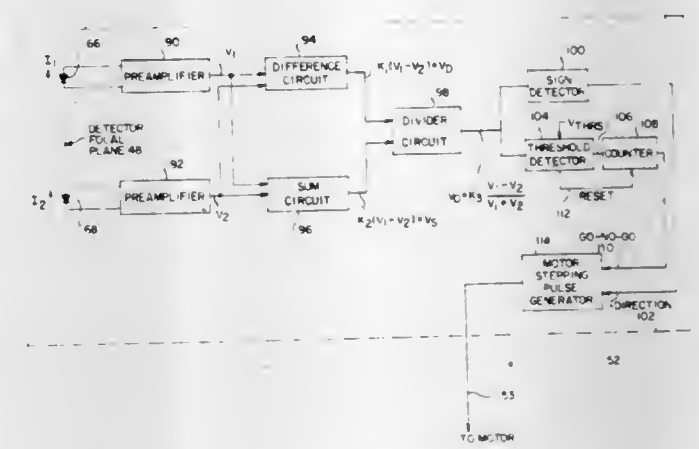

8. A synthetic aperture radar data optical correlator having means for detecting and tracking doppler shifts in said radar data comprising:

a reflective surface for directing a laser beam at a signal film containing said radar data;

a range telescope positioned to receive said laser beam after being modulated by said radar data;

a Fourier transform filter for removing a DC component and a virtual image component from said modulated laser beam;

an azimuth telescope for focusing said modulated laser beam, after having passed through said Fourier transform filter, on an image film;

first means for determining first and second light level intensities at two cross-sectional portions of said modulated laser beam after having passed through said Fourier transform filter; and

second means responsive to said first means for altering the angle of said reflective surface with respect to said laser beam reflected therefrom until the light level intensities at said two cross-sectional portions have a predetermined relationship with respect to each other.

4,371,947
ROM CONTROLLED PROTECTIVE RELAY SYSTEM FOR POWER TRANSMISSION NETWORK
Norio Fujisawa, Fuchu, Japan, assignor to Tokyo Shibaura Denki Kabushiki Kaisha, Kawasaki, Japan
Filed Mar. 26, 1980, Ser. No. 134,074
Claims priority, application Japan, Mar. 27, 1979, 54-36129
Int. Cl.³ G06F *3/05, 9/06, 15/06;* G05B *15/02*
U.S. Cl. 364—900 7 Claims

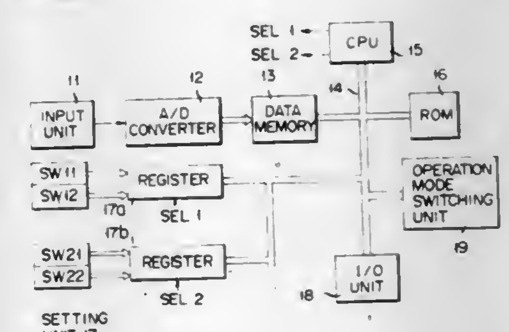

1. A digital protective relay system comprising:

an input unit for obtaining analog electric quantities representing physical quantities such as voltage on and current in a power transmission system;
an analog-to-digital converter for converting the output of said input unit into corresponding digital data;
a data memory for memorizing said digital data from said analog-to-digital converter;
a read only memory in which a program for executing calculations on the basis of a judgement formula for a plurality of protective relay functions is stored, said judgement formula including a constant whose magnitude is settable, a further constant whose sign can be selected and which can be set at zero or at a predetermined value, and an inequality, the kind of inequality being selectable;
a setting unit for setting the magnitude of the first-mentioned constant;
an operation mode switching unit for selecting the sign of the further constant and for setting the further constant to zero or to the predetermined value and for selecting the kind of the inequality to select a particular protective relay function; and
a central processing unit for executing digital calculations based upon the selected relay function utilizing the memory content in said data memory and the judgement formula.

4,371,948
TRAIN PRINTER-DATA LINK PROCESSOR
David P. Chadra, Anaheim, Calif., assignor to Burroughs Corporation, Detroit, Mich.
Filed May 7, 1980, Ser. No. 148,160
Int. Cl.³ G06F *3/12*
U.S. Cl. 364—900 **10 Claims**

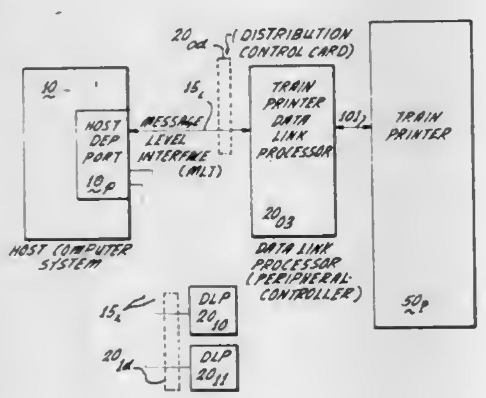

1. In a peripheral-controller for controlling a peripheral train-printer mechanism having "n" print hammers for printing an "n" column line with any of a series of "m" characters transmitted from main memory of a main host computer, said train-printer mechanism including a rotating train-block carrying at least "m" character slugs, and said host computer providing command words, delimiter characters and data-link task identifier words to communicate to said peripheral-controller, and said peripheral-controller returns result descriptor words to inform said main host computer of the completion/incompletion of each task initiated, a train-printer peripheral-controller comprising:
(a) a common front end circuit unit for storing, sequencing and executing instruction micro-codes for controlling operation of said peripheral-controller and including:
(a1) RAM buffer memory storage means, controlled by a peripheral dependent circuit unit, for temporary storage of data, said storage means including:
(a1-1) a first dedicated memory area, designated print image buffer, for storing codes of data characters representing one full line of print to be reproduced by said train printer mechanism in its printout;
(a1-2) a second dedicated memory area designated train image buffer, for storing codes of characters located on rotating train blocks in said train printer mechanism;
(a1-3) a third dedicated area for storing control data for said said peripheral-controller and information data for said host computer;
(a1-4) and wherein each of said first, second and third dedicated memory areas includes:
(i) addressable memory locations where each memory location can store two 8-bit character codes which are symbolized as a top character code, AB, and a bottom character code, CD, and each set of 4-bits is represented by A or B or C or D;
(b) a peripheral dependent circuit unit for providing address signals to said RAM buffer memory storage means and control signals to said peripheral train printer mechanism for operation of print hammers and paper motion, said peripheral dependent circuit unit including:
(b1) means to generate address signals for alternately accessing character codes in said first and said second dedicated memory areas for each of "n" columns to be scanned for printing;
(b2) means to convey accessed character codes from said first and second dedicated memory areas to a comparison means;
(b3) comparison means for sensing a match or non-match in said accessed character codes from said first and second memory areas for each print column involved and for causing the activity of a columnar print hammer in said train printer mechanism when a match is sensed, and wherein said comparison means includes: logic means for comparing said top-character and said bottom-character from said first memory area with said top-character and said bottom-character from said second memory area.

4,371,949
TIME-SHARED, MULTI-PHASE MEMORY ACCESSING SYSTEM HAVING AUTOMATICALLY UPDATABLE ERROR LOGGING MEANS
Ke-Chiang Chu, San Jose, and Richard S. Sharp, Santa Barbara, both of Calif., assignors to Burroughs Corporation, Detroit, Mich.
Continuation of Ser. No. 929,048, Jul. 28, 1978, abandoned, which is a division of Ser. No. 801,868, May 31, 1977, Pat. No. 4,174,537. This application Jun. 23, 1980, Ser. No. 162,218
Int. Cl.³ G06F *11/08;* G11C *29/00;* H03K *13/32*
U.S. Cl. 364—900 **10 Claims**

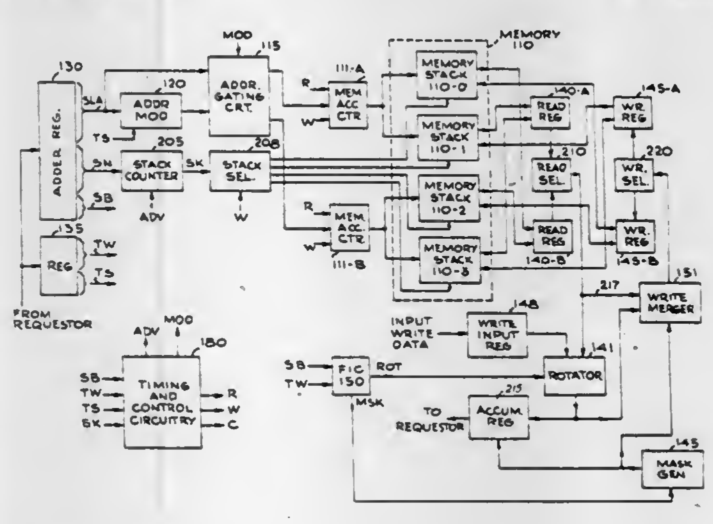

1. In combination:
means providing items of digital data, each having an associated check code chosen to permit the indication of a plurality of different types of data error conditions which may be present with respect to said items of data;
signal pattern generation means to which said items of data and their associated error check codes are sequentially applied, said signal pattern generating means being responsive to said data items and associated check codes to generate one of a plurality of different data error signal patterns indicating which if any of said plurality of different types of data error conditions is present with respect to each item of data; and
error log circuitry to which the data error signal patterns generated by said signal pattern generation means are applied;
said error log circuitry including first means for decoding said signal patterns and in response to said decoding providing indications of the occurrence of at least two of said different types of error conditions which may be present with respect to a plurality of data items applied to said signal pattern generation means over a predetermined time period;
said error log circuitry also including second means responsive to said signal patterns and to said indications of different types of data error conditions provided by said first means for establishing priorities between particular applied data error signal patterns and for indicating the highest priority data error signal pattern obtained for a plurality of data error signal patterns applied to said error log circuitry over said predetermined time period.

4,371,950
PERIPHERAL CONTROL INTERFACE CIRCUIT FOR TRAIN PRINTER-DATA LINK PROCESSOR
David P. Chadra, Anaheim, Calif., assignor to Burroughs Corporation, Detroit, Mich.
Filed Jun. 26, 1980, Ser. No. 163,271
Int. Cl.³ G06F *3/00*
U.S. Cl. 364—900 **10 Claims**

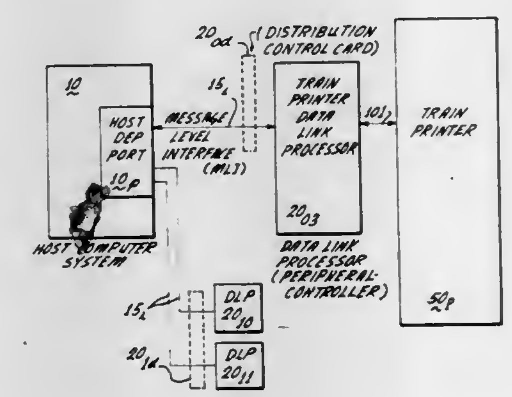

1. In a peripheral-controller which includes a peripheral interface control circuit and which regulates transfer of data to be printed from a main host system to a train printer mechanism having a motor-driven print train module having notched gear teeth and carrying graphic symbols which rotate across a paper train juxtaposed to a series of print hammers, wherein one print hammer is situated opposite each column to be printed, and wherein said train printer mechanism includes printer-logic means for selecting what column will be printed and which character will be printed in response to data and control signals from said peripheral-controller, a peripheral control interface circuit comprising:
(a) pulse generation means, synchronized with each rotation of said print train module, for generating a signal pulse for each print column of a line to be printed on said paper train during each revolution of said print train module across a line of said paper train, said pulse generation means providing a signal to said printer-logic means to cause a scan of information relates to the next print-column for printout of any character-match between a train character located at that particular column and a data character transmitted from said peripheral-controller;
(b) data line control and connection means for conveying coded data to said train printer mechanism;
(c) means for receipt and sensing of control information signals from said train printer mechanism;
(d) signal generation means to signal said train printer mechanism to select whether said coded data conveyed is for paper print-format control or graphic character printout.

4,371,951
APPARATUS FOR CONVERTING SERIAL INPUT SPARSE VECTOR FORMAT TO PARALLEL UNPACKED FORMAT FOR INPUT TO TANDEM ARITHMETIC LOGIC UNITS
Raymond C. Kort, New Brighton, and James W. Kelley, Stacy, both of Minn., assignors to Control Data Corporation, Minneapolis, Minn.
Filed Sep. 29, 1980, Ser. No. 191,808
Int. Cl.³ G06F *5/04*
U.S. Cl. 364—900 **4 Claims**

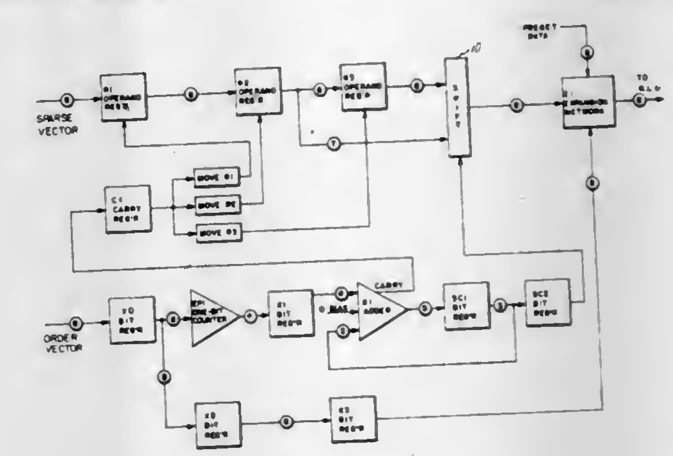

1. In a computer having an arithmetic logic unit capable of processing at least one predetermined number of operands in tandem, said computer further adapted to process sparse vectors, said sparse vectors having corresponding order vectors having bits of two types, a first type indicative of the location of sparse vector operands in an expanded vector, a second type indicative of the location of operands of a preselected value; for each sparse vector to be coprocessed by said arithmetic logic unit, the improvement comprising:
means for fetching said order vector bits group by group until all order vector bits have been fetched; the numbers of bits in each group being equal to said predetermined number of operands said arithmetic logic unit is capable of processing in tandem;
means responsive to said means for fetching order vector bits for developing a population count of the number of bits of said first type in a group of order vector bits;
means responsive to said means for developing a population count for forwarding a first plurality of operands from said sparse vector equal in number to said population count;
means for aligning and ordering said first plurality of operands into an expanded group according to the alignment and order of said first type bits in said group of order vector bits;
means for generating operands of a preselected value;
means for inserting said operands of a preselected value into said expanded group according to the alignment and order of said second type bits in said group of order vector bits; and
means for forwarding said expanded group of aligned and ordered operands in tandem to said arithmetic logic unit.

4,371,952

DIAGNOSTIC CIRCUITRY FOR ISOLATING A FAULTY SUBSYSTEM IN A DATA PROCESSING SYSTEM

David B. Schuck, Escondido, Calif., assignor to NCR Corporation, Dayton, Ohio

Filed May 6, 1981, Ser. No. 261,316

Int. Cl.³ G06F *11/00*

U.S. Cl. 364—900 **10 Claims**

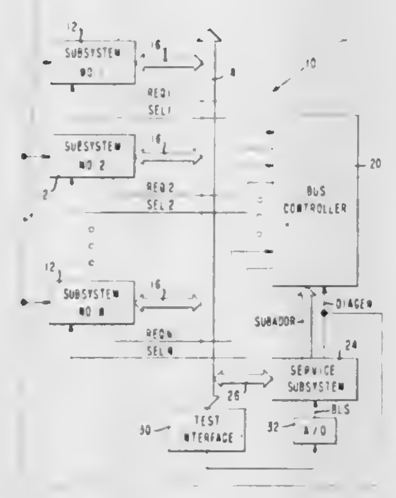

1. In a data processing system having a plurality of subsystems connected to a system bus, wherein a fault at one of said subsystems will cause a signal of a predetermined level to be continuously provided to said bus, the improvement wherein said data processing system further comprises diagnostic circuitry for locating the one of said subsystems having the fault, said diagnostic circuitry comprising:

means associated with each of said subsystems for selectively providing a signal of said predetermined level to said bus; and

means connected to said bus for detecting a change in the condition of said bus after each of said subsystems selectively provides said predetermined level signal to said bus.

4,371,953

ANALOG READ ONLY MEMORY

Gilbert P. Hyatt, P.O. Box 4584, Anaheim, Calif. 92803

Continuation-in-part of Ser. No. 101,881, Dec. 28, 1970, abandoned, Ser. No. 134,958, Apr. 19, 1971, Ser. No. 135,040, Apr. 19, 1971, Ser. No. 229,213, Apr. 13, 1972, Pat. No. 3,820,894, Ser. No. 230,872, Mar. 1, 1972, Ser. No. 232,459, Mar. 7, 1972, Ser. No. 246,867, Apr. 24, 1972, Pat. No. 4,310,878, Ser. No. 288,247, Sep. 11, 1972, Pat. No. 4,121,284, Ser. No. 291,394, Sep. 22, 1972, Ser. No. 302,771, Nov. 1, 1972, Ser. No. 325,933, Jan. 22, 1973, Pat. No. 4,016,540, Ser. No. 325,941, Jan. 22, 1973, Pat. No. 4,060,848, Ser. No. 366,714, Jun. 4, 1973, Pat. No. 3,986,022, Ser. No. 490,816, Jul. 22, 1974, Pat. No. 4,209,853, Ser. No. 476,743, Jun. 5, 1974, Ser. No. 522,559, Nov. 11, 1974, Pat. No. 4,209,852, Ser. No. 550,231, Feb. 14, 1975, Pat. No. 4,209,843, Ser. No. 727,330, Sep. 27, 1976, abandoned, Ser. No. 730,756, Oct. 7, 1976, Ser. No. 754,660, Dec. 27, 1976, Ser. No. 752,240, Dec. 20, 1976, and Ser. No. 801,879, May 31, 1977, Pat. No. 4,144,582. This application Jul. 1, 1977, Ser. No. 812,285

Int. Cl.³ G11C *17/00, 27/00*

U.S. Cl. 365—103 **27 Claims**

1. A non-volatile memory system comprising:

means for storing analog information in non-volatile form; wherein said storing means includes a plurality of electrodes and wherein each electrode of said plurality of electrodes includes electrode area means for storing the analog information in a dimensional characteristic of an electrode related to the analog information stored therein;

means for generating an analog charge signal for each of said plurality of electrodes proportional to the area of the respective electrode; and

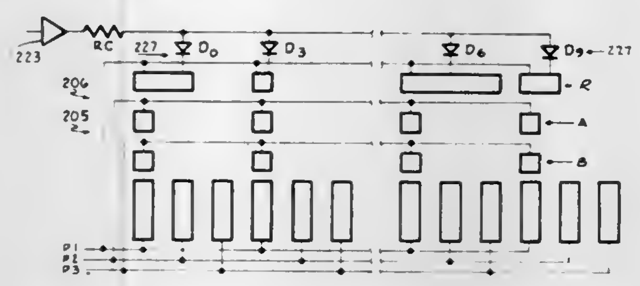

charge transfer means for generating an analog output signal in response to the analog charge signal.

4,371,954

REVERSIBLE MEMORY STRUCTURE WITH THERMO-OPTICAL WRITING AND OPTICAL READING AND PROCESS FOR WRITING AND ERASING SAID STRUCTURE

Jean Cornet, Paris, France, assignor to Thomson-CSF, Paris, France

Filed Jan. 27, 1981, Ser. No. 228,990

Claims priority, application France, Feb. 1, 1980, 80 02245

Int. Cl.³ G11C *13/04;* G11B *7/24*

U.S. Cl. 365—126 **7 Claims**

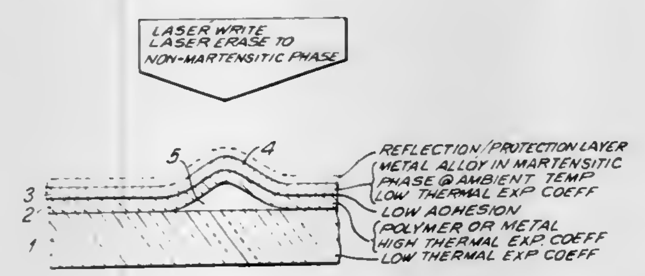

1. A reversible memory structure with thermo-optical writing or inscription and optical reading, supported by a substrate performing a forward movement, wherein the substrate is a material having a low expansion coefficient and the inscribable layer deposited on the substrate is formed by at least two individual layers, constituted by a first layer made from a material which, under the action of heat, deforms a second superimposed layer of a relatively inexpansible alloy which is at ambient temperature in a martensitic phase and has a transformation to another crystallographic phase at a temperature below the melting temperature of the first layer.

4,371,955

CHARGE-PUMPING MOS FET MEMORY DEVICE

Nobuo Sasaki, Kawasaki, Japan, assignor to Fujitsu Limited, Kawasaki, Japan

Filed Feb. 15, 1980, Ser. No. 122,059

Claims priority, application Japan, Feb. 22, 1979, 54-20094

Int. Cl.³ G11C *11/40*

U.S. Cl. 365—185 **12 Claims**

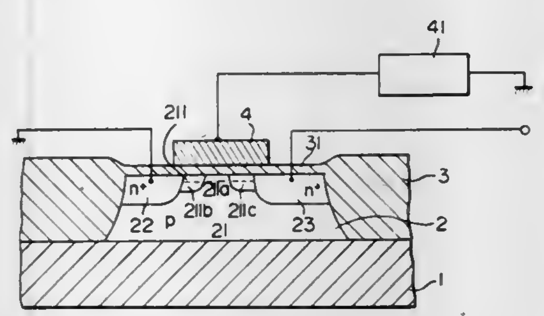

1. A semiconductor memory device comprising:

an electrically floating semiconductor layer;

a source and a drain region formed in said semiconductor layer;

a gate insulating layer formed on said semiconductor layer and a gate electrode formed on said insulating layer;

said memory device having a threshold voltage for conduction of a first value and normally storing one of "0" and "1" information values;

means for selectively applying a gate voltage to said gate electrode exceeding said first threshold voltage value of said device to produce a bias voltage in said semiconductor layer, said semiconductor layer storing said bias voltage produced by said gate voltage and establishing thereby a threshold voltage of a second value different from said first value, thereby to store the other of said "0" and "1" information values;

said memory device selectively storing "0" and "1" information values in accordance with a desired, predetermined relationship of said "0" and "1" information values and said different bias and corresponding threshold voltage values;

said semiconductor layer further comprising a central region having a low threshold voltage and side regions having a high threshold voltage, formed in said semiconductor layer between said source region and said drain region;

said first voltage threshold value being determined by said high threshold voltage of said side regions, and said side regions undergoing pinch-off prior to pinch-off occurring in said central region upon removal of said selectively applied gate voltage and

means for producing a read-out current from said memory device, the level of the read-out current differing in accordance with the different bias and corresponding threshold voltage values and thereby affording read-out of the information value stored in said memory device.

4,371,956

SEMICONDUCTOR DEVICE

Kohichi Maeda, Yokohama, and Masanobu Yoshida, Kawaguchi, both of Japan, assignors to Fujitsu Limited, Kawasaki, Japan

Filed Nov. 26, 1980, Ser. No. 210,664

Claims priority, application Japan, Dec. 4, 1979, 54-157054

Int. Cl.³ G11C *11/40*

U.S. Cl. 365—185 **6 Claims**

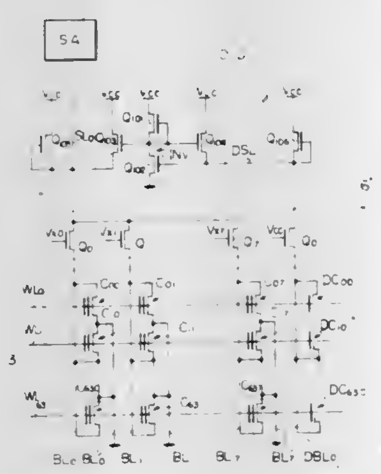

1. A semiconductor memory device comprising:

a substrate of a first conductivity type;

a plurality of arrays of MIS main memory cells of a charge-storage type disposed on said substrate;

a plurality of bit lines, each connected to a respective one of said arrays of MIS main memory cells;

at least one array of dummy memory cells of the same type as said MIS main memory cells arranged along one of said bit lines;

at least one dummy bit line, connected to said at least one array of dummy memory cells, said at least one dummy bit line being of the same type as said bit lines; and

at least one compensating circuit means, connected to said at least one dummy bit line and to at least one of said bit lines, for detecting the potential of said at least one dummy bit line and supplying compensating currents to said at least one of said bit lines and said at least one dummy bit line responsive to the potential of said at least one dummy line.

4,371,957

ANTISUBMARINE WARFARE SYSTEM

Oscar A. Sandoz, and John Mar, both of Ottawa, Canada, assignors to Her Majesty the Queen in right of Canada, as represented by the Minister of National Defence, Canada

Filed Dec. 12, 1969, Ser. No. 889,852

Int. Cl.³ G01S *3/82*

U.S. Cl. 367—3 **15 Claims**

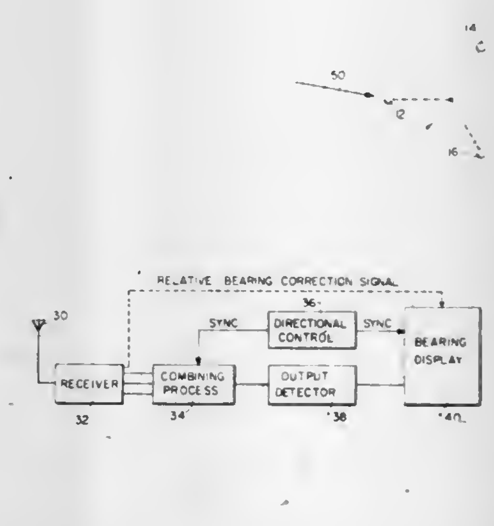

1. A system for determining the direction of an underwater discrete source of acoustic vibrations by sensing acoustic wavefronts produced thereby, comprising a semirigid generally neutrally buoyant underwater platform made of a water inflated soft walled element, an acoustic wavefront sensing array of at least three omnidirectional hydrophones mounted on said platform in a preselected geometric arrangement, and a telemetry link including transmitting means and receiving means, said transmitting means being connected to said hydrophones, and array steering means connected with said receiving means to allow determination of the time relationship of the signals obtained from said hydrophones.

4,371,958

DRILLING ORIENTATION TOOL

Jack R. Claycomb, 8226 Waynemer, Houston, Tex. 77040

Continuation-in-part of Ser. No. 890,368, Mar. 27, 1978, Pat. No. 4,184,545, and a continuation-in-part of Ser. No. 887,725, Mar. 16, 1978, Pat. No. 4,235,021. This application Jan. 21, 1980, Ser. No. 113,560

Int. Cl.³ E21B *47/12*

U.S. Cl. 367—85 **6 Claims**

1. A device for forming a mud flow modulated signal installable in a drill string, the device comprising:

(a) an elongate, hollow outer body adapted to be connected in a drill string;

(b) an elongate, tubular inner body received within said outer body;

(c) means positioning said inner body in said outer body to form an annular space between said inner body and outer body directing mud flow through said annular space;

(d) a closed hydraulic reservoir in said inner body and exposed to pressure of the mud flow through said annular space;
(e) hydraulic fluid line means extending from said reservoir for delivering hydraulic fluid under pressure;
(f) a piston in a cylinder;
(g) constriction means in said annular space which directs the mud flow therethrough which constriction means is located in said outer body and which further directs the mud flow downwardly through said outer body;

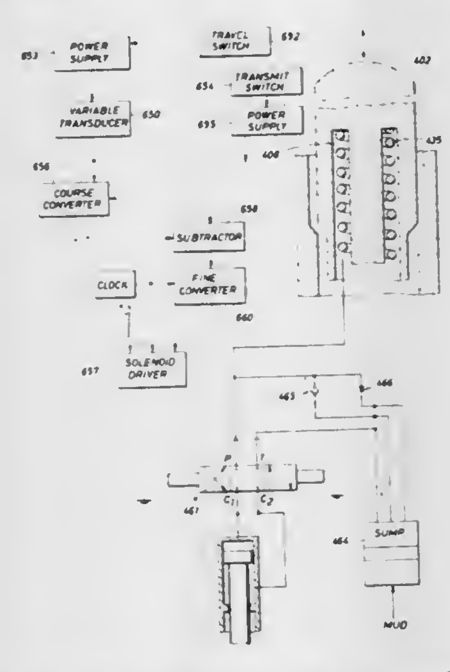

(h) plug means extending into said constriction means for varying the mud flow permitted through said constriction means, said plug means being movable by said piston relative to said constriction means;
(i) electrically operated control valve means connected to said piston and cylinder for controllably delivering hydraulic fluid thereto from said hydraulic line means for controllably moving said piston in said cylinder; and
(j) transducer means having an electrical output and adapted to respond to a variable of interest and which transducer means encodes the variable to form an electrical output to operate said control valve means.

4,371,959
POSITION SENSOR FOR VIDEO DISC
William G. McGuffin, Willingboro, N.J., assignor to RCA Corporation, New York, N.Y.
Filed Jul. 31, 1980, Ser. No. 174,025
Int. Cl.³ G11B *9/06*
U.S. Cl. 369—43 **8 Claims**

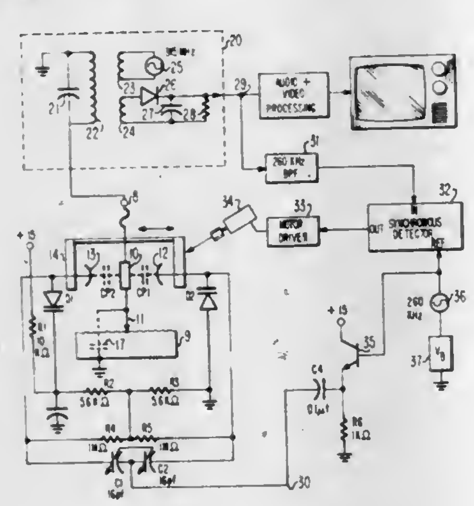

1. An improved video disc stylus position sensor system of the type having a signal pickup stylus secured to a stylus arm, said stylus arm being compliantly mounted in a carriage assembly for translating the pickup stylus radially across a record disc and permitting relative movement between the pickup stylus and the carriage assembly, said pickup stylus connected to pickup circuitry for sensing capacitance between said stylus and the disc record, said sensor system having first and second variable capacitors formed by first and second electrodes secured to the carriage and a third electrode disposed therebetween, said third electrode forming one plate of both said first and said second variable capacitors, said third electrode secured in fixed relation to said pickup stylus, and having first and second voltage variable capacitances connected respectively between said first electrode and AC ground potential and said second electrode and AC ground potential, and wherein the stylus position signal is extracted from an output signal from said pickup circuitry by a frequency selective circuit, wherein the improved stylus position sensor comprises:
means for applying a pilot signal;
first and second capacitors each having a first terminal connected to a first node and having respective second terminals connected respectively to said first and second electrodes;
a buffer amplifier having an output terminal connected to said first node and an input terminal connected for receiving said pilot signal, the output impedance of the amplifier being sufficiently small that parametric changes in said impedance do not effect significant phase changes between the pilot signal applied to the amplifier signal input terminal and the pilot signal coupled through said amplifier to the first and second electrodes via said first and second capacitors.

4,371,960
MEASUREMENT OF DISC SERVO HEAD/DATA HEAD MISALIGNMENT
Gerald C. Kroiss, Minneapolis, Minn., assignor to Magnetic Peripherals Inc., Minneapolis, Minn.
Filed Dec. 24, 1980, Ser. No. 219,709
Int. Cl.³ G11B *21/10*
U.S. Cl. 369—43 **4 Claims**

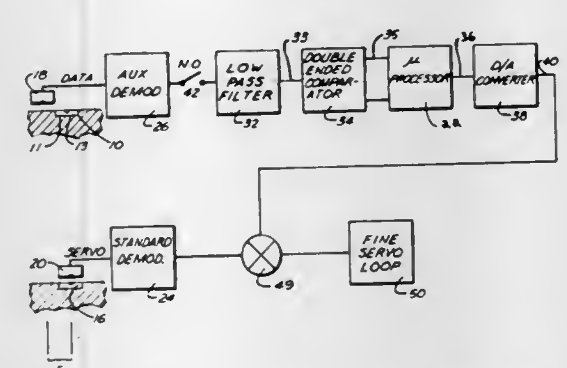

1. In a method of compensating for radial offset between a disk drive's servo head and a data head wherein at least one track of data surface servo data is written on a data surface and at least one track of servo surface servo data is written on a servo surface in vertical alignment with said data surface servo data, an auxiliary demodulator is connected with the data head to develop a position error signal from said data surface servo data and a standard demodulator is connected with the servo head in a servo loop for developing a position error signal from said at least one track of servo surface servo data, the improvement comprising:
A. measuring the position error signal due to the radial offset between the servo head and the data head as developed by the standard demodulator connected to the servo head;
B. converting this signal into a digital value; and
C. storing it in a digital memory for later compensating for said radial offset in fine positioning of a data head over a data track center by retrieving said digital value from memory, converting it to a voltage via a digital-to-analog converter and injecting said voltage into the servo loop.

4,371,961
CAPACITIVE INFORMATION SYSTEM
Gerald D. Rose, Indianapolis, Ind., assignor to RCA Corporation, New York, N.Y.
Filed Nov. 21, 1980, Ser. No. 208,983
Int. Cl.³ G11B *11/06*
U.S. Cl. 369—126 **7 Claims**

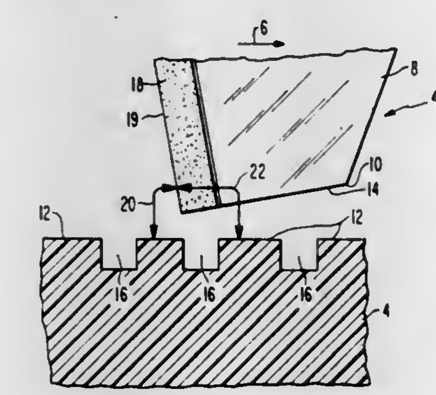

1. In an information storage and recovery system which comprises a playback stylus, having a dielectric support element and a conductive electrode, and a grooved conductive record disc, in which information is recorded, wherein the information is recovered on playback while there is relative motion between the record surface and the stylus by sensing capacitive variations between the stylus conductive electrode and the record surface;
wherein the improvement comprises employing that angle between the electrode face and the record surface such that the respective paths of dielectric effects between the electrode face and the record surface in the direction of relative motion and in the direction opposite the direction of relative motion are balanced.

4,371,962
CIRCUIT ARRANGEMENT FOR COMPENSATING PHASE DIFFERENCES OF NON-SYNCHRONOUS CLOCK PULSE RATES OF A TELECOMMUNICATION SYSTEM
Rolf Zeitraeg, Munich, Fed. Rep. of Germany, assignor to Siemens Aktiengesellschaft, Berlin & Munich, Fed. Rep. of Germany
Filed Sep. 8, 1980, Ser. No. 184,770
Claims priority, application Fed. Rep. of Germany, Sep. 12, 1979, 2936938
Int. Cl.³ H04J *3/06;* **H04L** *7/04*
U.S. Cl. 370—100 **4 Claims**

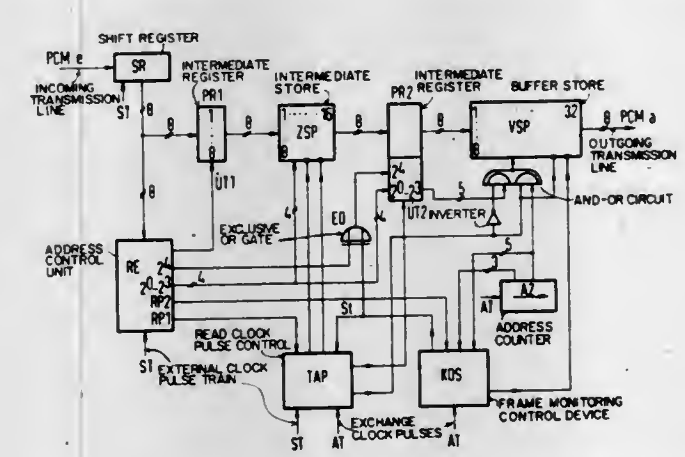

1. Circuit arrangement for a pulse coded time division multiplex (PCM) telecommunication system for compensating phase differences resulting from deviations between rates of an external clock pulse train controlling transmission of information across an incoming transmission line and of a non-synchronous internal clock pulse train controlling switching operations of an exchange, said circuit arrangement being arranged between said incoming transmission line for serial transmission of PCM information and an outgoing transmission line connected to the exchange for parallel transmission of PCM words which correspond to PCM information sampled from one speech channel and being transferred in one channel time slot, comprising:
(a) first storage means for consecutively storing PCM words for half of a pulse frame and having parallel data inputs and respective data outputs for one PCM word, said first storage means being designed for two modes of operation, wherein during one channel time slot defined by said external clock pulse train in an active mode of operation at first a stored PCM word is read out from a selected storage location and then a new PCM word separated from the previously stored PCM word by a half of a pulse frame is written in, and in a non-active mode the same PCM word first is temporarily buffered and read out thereafter;
(b) an intermediate register having a capacity for one PCM word and for a binary coded channel address, and having corresponding parallel data inputs and outputs, and parallel address inputs and outputs, said data inputs being connected in parallel with respective ones of said data outputs of said first storage means;
(c) second storage means for consecutively storing PCM words of a full pulse frame under control of said internal clock pulse train and having parallel data inputs connected to said data outputs of said intermediate register, having data outputs connected to said outgoing transmission line and having address inputs;
(d) means for generating consecutive binary coded channel addresses of an entire pulse frame under control of said external clock pulse train and having parallel address outputs for channel address bits and connected in parallel with both respective address inputs of said first storage means and address inputs of said intermediate register; and
(e) control means for determining the mode of operation of said first storage means dependent upon a minimum off-set of read addresses and write addresses for the second storage means, wherein the mode of operation of the first storage means is changed and the most significant bit of a full channel address is inverted whenever the current offset is lower than said minimum.

4,371,963
METHOD AND APPARATUS FOR DETECTING AND CORRECTING ERRORS IN A MEMORY
Gordon L. Edwards, Jr., Easley, S.C., and Walter A. Smith, Kettering, Ohio, assignors to NCR Corporation, Dayton, Ohio
Filed Dec. 24, 1980, Ser. No. 220,221
Int. Cl.³ G06F *11/10*
U.S. Cl. 371—50 **8 Claims**

1. An error detection and correction system comprising:
means for storing data including a first section, said data being stored in said first section in rows and columns, with a predetermined number of said rows of data forming a block in said first section;
first means for generating and storing first check bits for said rows of data; and
error correcting means, including:
second means for generating check bits for said columns of data so as to produce a check word for each said block;
a second section for storing said check words;
and
processor means operatively coupling said first and second means with said first and second sections;
said processor means including:
means for detecting an error in one of said rows as indicated by the associated said first check bit with the row containing an error being referred to as an error row;

third means for generating a new check word for all said rows of data except said error row in the associated said block when an error row is found by said detecting means; and

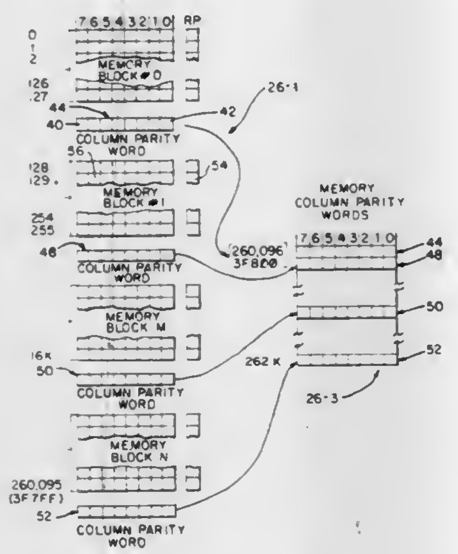

means for Exclusive ORing said new check word with the said check word for said block to thereby obtain corrected data for said error row.

4,371,964

CIRCUIT ARRANGEMENT FOR CONTROLLING A MULTI-BEAM ACOUSTO-OPTICAL CELL IN WHICH BRAGG DIFFRACTION IS USED FOR THE GENERATION OF A PLURALITY OF OUTGOING LASER BEAMS

Andras Podmaniczky; Szabolcs Tokes, and Attila M. Lenk, all of Budapest, Hungary, assignors to Magyar Tudomanyos Akademia Szamitastechnikai es Automatizalasi Kutato Intezete, Budapest, Hungary

Filed Apr. 8, 1980, Ser. No. 138,420
Claims priority, application Hungary, Apr. 18, 1979, MA 3134
Int. Cl.[3] **H01S** *3/00*

U.S. Cl. 372—38 **7 Claims**

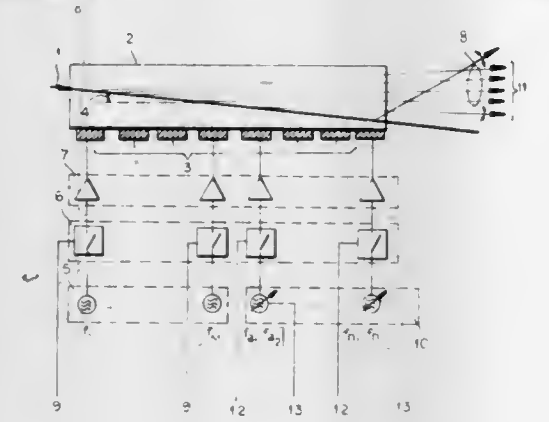

1. An apparatus for generating a variety of laser-beam patterns which comprises:
 a Bragg diffraction acousto-optical cell having an input end and an output end;
 means for directing a laser beam into said cell at said input end of said acousto-optical cell whereby said laser beam traverses said cell and can be diffracted therein to produce a plurality of output laser beams emerging from said output end of said acousto-optical cell;
 a plurality of ultrasonic transducers integral with said cell and spaced apart between said input end of said cell and said output end of said cell, the number of said transducers being equal at most to the number of said output beams, said ultrasonic transducers being electrically activatable to generate respective ultrasonic waves in said cell to cause Bragg diffraction of the laser beam traversing said cell and produce said output beams;
 a group of constant-frequency oscillators equal in number at most to the number of said output beams and of differing frequencies, said oscillators being connected to respective ones of said transducers for applying electrical signals thereto to enable said transducers to diffract the laser beam traversing said cell within a respective diffraction-angle range and produce a respective one of said output laser beams;
 at least one variable-frequency oscillator having a frequency-determining control input and connected to one of said transducers assigned to one of said output laser beams, said variable-frequency oscillator having a variable-frequency range nonoverlapping with those of said constant-frequency oscillators producing said output beams for producing at least one further output laser beam;
 means for applying an alternating signal to said control input of said variable-frequency oscillator to continuously deflect said further output beam in response to said alternating signal; and
 a respective control state between each oscillator and the respective transducer for modulating the signal transmitted between the respective oscillator and transducer, each control state having a respective control input for receiving modulating signals.

4,371,965

HIGH NEODYMIUM CONTENT ALUMINOPHOSPHATE GLASS AND LASER

Alexander Lempicki, Wayland, and Richard M. Klein, Framingham, both of Mass., assignors to GTE Laboratories Incorporated, Waltham, Mass.

Filed Aug. 7, 1978, Ser. No. 931,703
Int. Cl.[3] **H01S** *3/17*

U.S. Cl. 372—40 **5 Claims**

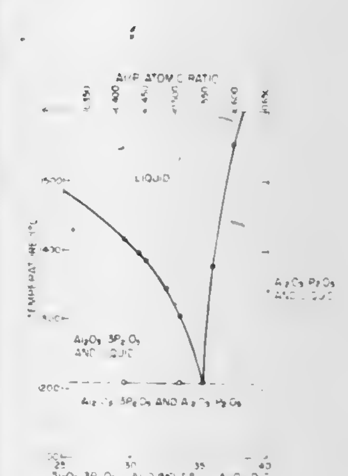

1. A laser comprising
 an optical resonance cavity defined by a first totally reflective mirror and a second partially transmissive mirror,
 a glass laser medium disposed within said optical resonance cavity, said glass laser medium consisting of from about 0.01 mole percent to about 13 mole percent neodymium oxide, from about 25 mole percent to about 35 mole percent aluminum oxide, and from about 60 mole percent to about 70 mole percent phosphorus pentoxide, and
 an optical pumping means disposed adjacent to said optical resonance cavity for exciting said glass laser medium to emit stimulated radiation.

4,371,966

HETEROSTRUCTURE LASERS WITH COMBINATION ACTIVE STRIP AND PASSIVE WAVEGUIDE STRIP

Donald R. Scifres, Los Altos; William Streifer, Palo Alto, and Robert D. Burnham, Los Altos Hills, all of Calif., assignors to Xerox Corporation, Stamford, Conn.

Filed Nov. 6, 1980, Ser. No. 204,430
Int. Cl.[3] **H01S** *3/19*

U.S. Cl. 372—45 **8 Claims**

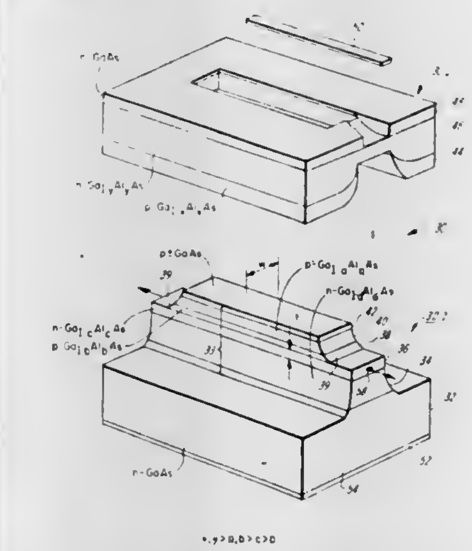

1. In a heterostructure laser comprising a plurality of contiguous semiconductor layers epitaxially deposited on a substrate, one of said layers being an active region and having a lower bandgap and higher index of refraction than at least cladding layers immediately adjacent to the active region to permit carrier recombination and support radiation propagation between transverse end facets of the laser under lasing conditions, means incorporated on and/or in said laser to confine current to a portion of said active region, means in said active region to optically confine radiation propagating therein in both dimensions transverse to the direction of propagation, the extremities of said active region means falling short of said end facets, passive waveguide means extending from said end facets and optically coupled to said active region means to receive at least a portion of said propagating radiation, said passive waveguide means optically confining radiation propagating therein in both dimensions transverse to the direction of propagation, said passive waveguide means is an elongated strip contiguous to a surface of said active region means, said passive waveguide strip being of full extent between said end facets with the ends of said active region means being taper coupled to said passive waveguide strip.

4,371,967

SEMICONDUCTOR LASER

Masaru Wada, Takatsuki; Hirokazu Shimizu, Toyonaka; Takashi Sugino, Takatsuki, and Kunio Itoh, Uji, all of Japan, assignors to Matsushita Electric Industrial Co., Ltd., Kadoma, Japan

Filed Dec. 12, 1980, Ser. No. 215,665
Claims priority, application Japan, Dec. 19, 1979, 54-165878
Int. Cl.[3] **H01S** *3/19*

U.S. Cl. 372—45 **6 Claims**

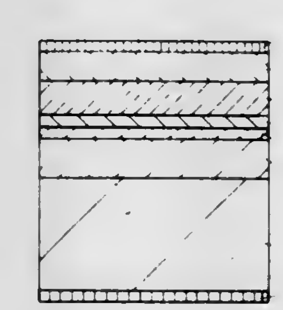

1. In a semiconductor laser comprising a semiconductor substrate and epitaxial layers formed thereon including an active layer,
 at least one semiconductor layer neighboring said active layer being a composite layer comprising two component layers of a same conductivity type and doped with, for one layer in direct contact with said active layer, a dopant of a diffusion coefficient smaller than that of another dopant doped in the other layer of said two component layers, both of said two component layers having energy gaps wider than that of said active layer, and said one layer in direct contact with said active layer having an energy gap narrower than that of said the other layer of said two component layers.

4,371,968

MONOLITHIC INJECTION LASER ARRAYS FORMED BY CRYSTAL REGROWTH TECHNIQUES

C. Ward Trussell, Jr., Woodbridge, and James E. Miller, Springfield, both of Va., assignors to The United States of America as represented by the Secretary of the Army, Washington, D.C.

Filed Jul. 1, 1981, Ser. No. 279,394
Int. Cl.[3] **H01S** *3/19;* **H01L** *21/208*

U.S. Cl. 372—50 **11 Claims**

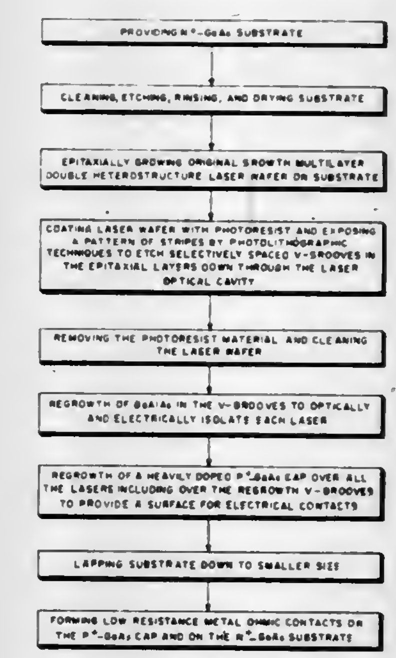

1. A process for forming a monolithic injection laser array, the steps comprising:
 cleaning, etching, rinsing, and drying an N+-GaAs substrate;
 epitaxially growing an orginal growth multilayer double heterostructure GaAlAs laser wafer on said substrate;
 selectively etching V-grooves in the epitaxial layers down through the optical cavity of the laser;
 preparing said laser wafer for crystal regrowth;
 regrowing by crystal regrowth GaAlAs in said V-grooves to optically and electrically isolate each adjacent laser;
 regrowing by crystal regrowth a heavily doped P±GaAs cap over all the lasers in the laser array including over said crystal regrowth GaAlAs in said V-grooves;
 thinning said substrate by lapping; and
 depositing metal ohmic contacts on said P±GaAs cap and on the lapped N+-GaAs substrate to provide electrical connections to an external power source.

4,371,969
LOW COST LASER

Evan P. Chicklis, Nashua, and James R. Mosto, North Conway, both of N.H., assignors to Sanders Associates, Inc., Nashua, N.H.
Filed Jun. 5, 1978, Ser. No. 912,826
Int. Cl.³ H01S *3/00*
U.S. Cl. 372—77 **11 Claims**

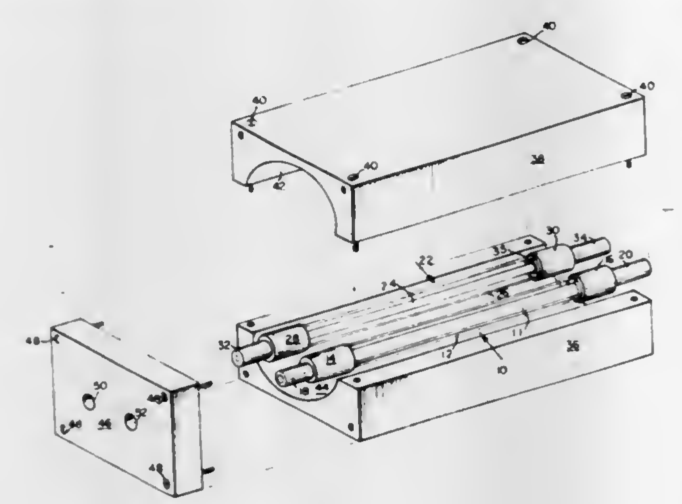

1. A laser comprising:
a reasonant cavity including a solid state laser rod;
means for abstracting energy from said cavity; and
pumping means for pumping said laser rod, said pumping means including:
a solid metal whose combustion in oxygen occurs at sufficiently high temperatures so that the ensuing optical radiation will maintain oscillations in said laser rod;
a source of oxygen which will maintain combustion of said metal;
means for providing a sustaining flow of said oxygen past said metal; and
means for igniting said metal.

4,371,970
DOME FOR ELECTRIC ARC FURNACE

Bernard Guilpain, Saint Etienne, and Xavier Tinchant, Villars, both of France, assignors to Clesid S.A., Saint-Chamond, France
Filed Jul. 10, 1980, Ser. No. 168,468
Claims priority, application France, Feb. 22, 1980, 80 03924
Int. Cl.³ F27D *1/12*
U.S. Cl. 373—74 **7 Claims**

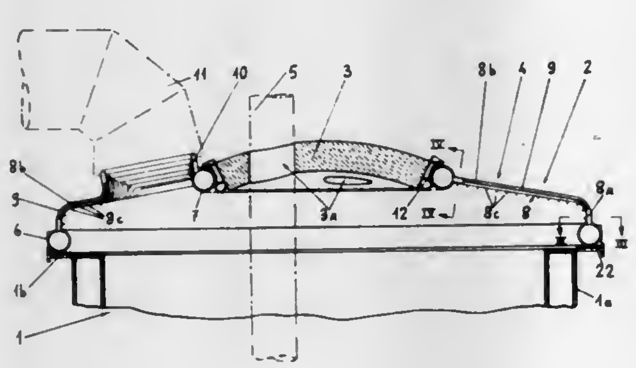

1. A dome for an electric arc furnace of the type comprising a central portion (3) of refractory material and a cooled metallic crown (4) comprising two concentric toroidal pipes (6, 7) connected by radial tubes (8) to form an internal conduit for assuring the circulation of a cooling fluid in said crown, said dome comprising means for collecting gases originating from the production of steel and having a generally curved shape concave toward the base of said furnace, and said crown having a monolithic structure.

4,371,971
SAMPLE LOADING MECHANISM

Roger L. Bredeweg, Stevensville, Mich., assignor to Leco Corporation, St. Joseph, Mich.
Filed May 15, 1980, Ser. No. 149,916
Int. Cl.³ F27D *3/00, 11/04*
U.S. Cl. 373—115 **8 Claims**

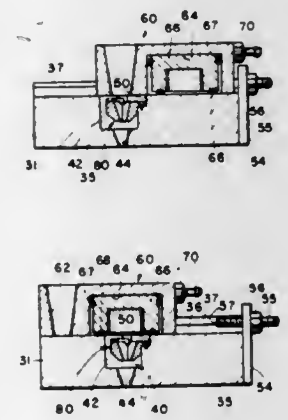

1. An apparatus for dropping a relatively small sample into a crucible of a combustion furnace comprising:
hopper means having a floor for releasably holding a relatively small sample, said hopper means including an element movable between a first position closing said floor for holding a sample in said hopper and a second position opening said floor for releasing a sample;
actuating means coupled to said movable element for moving said element between said first and second positions;
a base adapted to be mounted to a combustion furnace and including a generally vertically extending aperture means for receiving said hopper means, and means for coupling said hopper means to said base such that samples can be placed in said hopper means, and further including means coupled to said base for selectively sealing an upper end of said aperture means, wherein said movable element of said hopper comprises a jaw pivotally movable from a closed to an open position, wherein said jaw is pivotally coupled to said base and wherein said actuating means comprises a control rod movably coupled to said base and coupled to said jaw for moving said jaw to at least said open position, said hopper further including a stationary jaw and wherein said stationary jaw and said first named jaw include downwardly and inwardly converging sidewalls to position a sample placed in said hopper on the floor of said hopper; and
wherein said sealing means comprises a plate slideably positioned on an upper surface of said base and including an aperture extending vertically therethrough to align with said hopper when said plate is in a first position, said plate further including a seal which is aligned over and sealably engages a top surface of said base around said aperture when said plate is in a second position.

4,371,972
ADAPTIVE DELTA MODULATOR

Dieter Schwarz; Ralf Misner, both of Nuremberg, Fed. Rep. of Germany, and Johannes W. Glasbergen, Bussum, Netherlands, assignors to U.S. Philips Corporation, New York, N.Y.
Filed Jan. 23, 1981, Ser. No. 227,833
Claims priority, application Fed. Rep. of Germany, Jan. 29, 1980, 3002960
Int. Cl.³ H03K *13/22*
U.S. Cl. 375—30 **3 Claims**

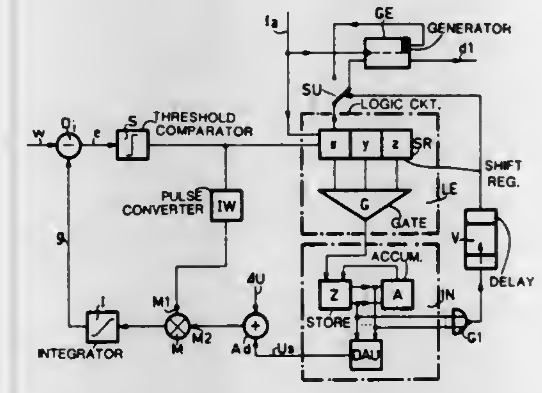

1. An adaptive delta modulator for producing a delta coded output signal in response to an input signal, said delta modulator including a filter whose input signal is a pulse sequence derived from said delta coded output signal by a logic processing circuit and whose output voltage determines the instantaneous quantizing unit of said delta modulator, characterized in that said delta modulator further comprises a generator for producing a periodic 0–1 sequence, means coupled to the output of said filter for detecting when the output voltage therefrom has zero value, and means coupled to said detecting means for alternatively coupling the output of said generator to the output of said adaptive delta modulator instead of said delta coded output signal in response to said detecting means.

4,371,973
APPARATUS FOR TRANSFORMING, TRANSFERRING AND RE-TRANSFORMING OF A SAMPLED SIGNAL

Tore Fjällbrant, Hökasvägen, pl. 67, 430 80 Hovas, Sweden
Filed Jun. 10, 1980, Ser. No. 158,241
Claims priority, application Sweden, Jun. 19, 1979, 7905408
Int. Cl.³ H03K *3/013, 5/156*
U.S. Cl. 375—58 **2 Claims**

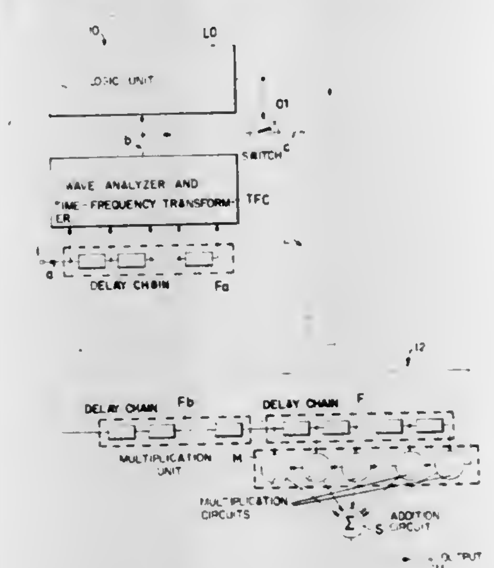

1. An apparatus for transforming a uniformly sampled signal to a non-uniformly sampled signal in a transmitter, transferring the signal thus non-uniformly sampled to a receiver, and re-transforming the transferred non-uniformly sampled signal to a uniformly sampled signal in the receiver, comprising:
a transmitter including:
a delay chain receiving the uniformly sampled signal and providing a plurality of outputs,
a wave analyzer for emitting signals divided into frequency sectors, the analyzer including inputs connected to the outputs of the delay chain, and further including outputs,
a logic unit connected to the outputs of the wave analyzer for analyzing the signals from the wave analyzer and generating a control signal dependant upon the result of said analysis, said control signal containing information on frequency sectors comprising samples with signal amplitudes which are low relative to the samples in other sectors,
a time-frequency transformer for transforming signal blocks of samples in the time domain to corresponding signal blocks of samples in the frequency domain, the time-frequency transformer being connected to the outputs of the delay chain and to the logic unit;
a first switch for excluding certain samples in blocks of samples in the frequency domain in response to said control signal and outputting the same; and
a receiver including:
a frequency-time transformer receving said frequency domain signals output from said switch and retransforming said signal blocks of samples in the frequency domain to corresponding signal blocks of samples in the time domain, said frequency-time transformer for reconstructing previously excluded samples and comprising:
a first delay chain having delay elements, for receiving said frequency domain signals and providing a plurality of outputs,
a second delay chain with at least as many delay elements as said first delay chain, said second delay chain receiving said frequency domain signals and providing at least one output to the input of said first delay chain,
a multiplication unit having a plurality of inputs connected to said outputs of said first delay chain and receiving said control signal from said transmitter, said multiplication unit being for weighted multiplication of samples with coefficients stored in a memory under control of the control signal, and
an an addition unit having inputs connected to the outputs of the multiplication unit and adding together the samples therefrom to form the output of the apparatus.

4,371,974
NRZ DATA PHASE DETECTOR

John M. Dugan, Garland, Tex., assignor to Rockwell International Corporation, El Segundo, Calif.
Filed Feb. 25, 1981, Ser. No. 238,179
Int. Cl.³ H03L *7/06*
U.S. Cl. 375—82 **1 Claim**

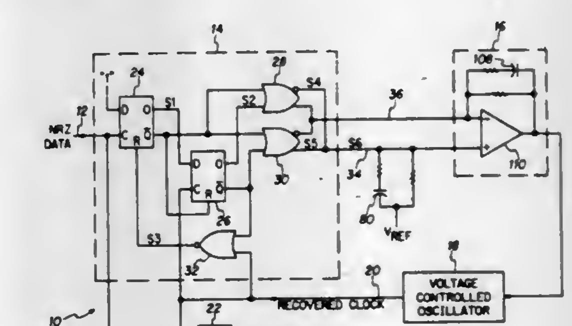

1. An NRZ data phase detector comprising:
first and second flip-flops, each having a data input, a clock input, a reset input, a first output and a second output providing a logic value which is the complement of said first output,
said first flip-flop having a fixed logical value at its data

input and receiving NRZ data at its clock input, so as to set the first flip-flop at a first data transition,

said second flip-flop receiving at its data input one of the outputs of the first flip-flop and receiving at its clock input a recovered clock signal, so that said second flip-flop becomes set on a first transition of said recovered clock signal while said first flip-flop is set,

reset gate means having the output thereof connected to the reset input of said first flip-flop and responsive to one of the outputs of said second flip-flop and to said recovered clock for resetting said first flip-flop upon the occurrence of a second transition of said recovered clock while said second flip-flop is set, thereby generating from said first flip-flop a variable duration pulse initiated by said data transition and terminated by said second clock transition,

said second flip-flop receiving at the reset input thereof one of the outputs of the first flip-flop, so as to reset the second flip-flop upon reset of the first flip-flop, thereby generating a fixed duration pulse determined by said first and second clock transitions,

output gate means responsive to outputs of said first and second flip-flops for deriving phase information from said variable and fixed duration pulses.

4,371,975
SAMPLING NRZ DATA PHASE DETECTOR
John M. Dugan, Garland, Tex., assignor to Rockwell International Corporation, El Segundo, Calif.
Filed Feb. 25, 1981, Ser. No. 238,181
Int. Cl.³ H03L *7/06*
U.S. Cl. 375—120 **17 Claims**

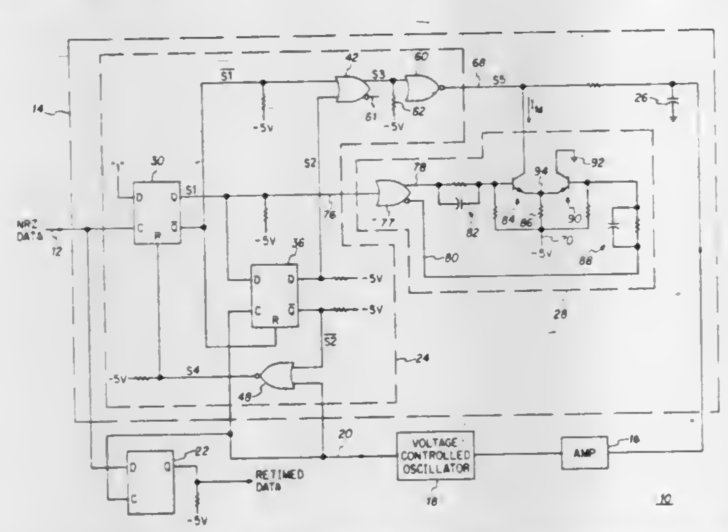

1. A sampling NRZ data phase detector suitable for applications with long sequences of no data activity, comprising:

phase error means for detecting the phase difference between data transitions and clock transitions, and outputting phase signals;

energy storage means for accumulating and holding said phase signals; and

sampling switching means between said phase error means and said energy storage means and controlled by said phase error means so as to (i) be responsive to a data transition to switch to a first state enabling said energy storage means to sample the output of said phase error means, and (ii) be responsive to a designated clock transition following said data transition to switch to a second state isolating the signal level in said energy storage means from erroneous phase information from said phase error means.

4,371,976
X-RAY APPARATUS FOR DETERMINING THE ABSORPTION DISTRIBUTION IN A FLAT EXAMINATION ZONE
Wolfgang Wagner, Hamburg, Fed. Rep. of Germany, assignor to U.S. Philips Corporation, New York, N.Y.
Filed May 14, 1980, Ser. No. 149,782
Claims priority, application Fed. Rep. of Germany, May 18, 1979, 2920051
Int. Cl.³ G21K *1/04;* G01N *23/08*
U.S. Cl. 378—16 **4 Claims**

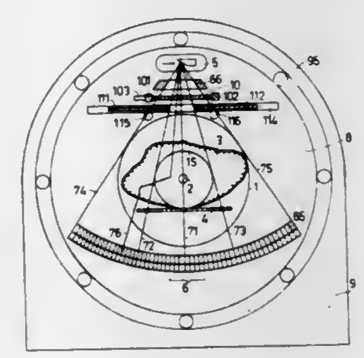

1. In apparatus for determining an X-ray absorption distribution in a planar examination zone which is situated in a body, the body being disposed within a positioning zone which encloses the examination zone, of the type comprising:

X-ray source means which function to produce X-rays, diaphragm means which function to form X-rays produced by the source means into a flat fan-shaped beam which passes through the positioning zone in the plane of the examination zone, detector means situated adjacent the positioning zone which function to receive and measure X-rays in the beam which have passed through the positioning zone, positioning means which function to cause the source means to irradiate the positioning zone from a plurality of successive positions around an axis which extends through the examination zone transverse to the plane thereof, and means which function to attenuate X-rays in the beam so that the average flux of the X-rays which pass through the examination zone is greater than the average flux of the X-rays which pass through the positioning zone but which do not pass through the examination zone; the improvement wherein

the means which function to attenuate comprise:

one or more absorber pieces which intercept X-rays and which define edges which are oriented transverse to the axis and

means which function to move the absorber pieces in synchronism with the operation of the positioning means so that at certain of the positions around the axis the absorber pieces completely shield X-rays which pass through the positioning zone but do not pass through the examination zone from reaching the detector means and the absorber pieces only partially shield said portion of the x-ray beam at others of said positions.

4,371,977
METHOD FOR DETECTING SOLIDIFICATION IN A MIXED PHASE CONTAINER
John M. Jenkins, III, South Charleston, W. Va.; Max E. Carter, Sr., Victoria, Tex.; Michael L. Green, Scott Depot, W. Va., and Marvin E. Cavender, Victoria, Tex., assignors to Union Carbide Corporation, Danbury, Conn.
Filed Jun. 17, 1980, Ser. No. 160,288
Int. Cl.³ G01N *23/00*
U.S. Cl. 378—51 **4 Claims**

1. A method for detecting solidification in a mixed phase low pressure fluidized bed olefin polymerization reactor having volume comprising:

A. disposing a radiation source and a radiation detector such that radiation from said radiation source will pass through a radiation path through at least a portion of the volume of said reactor to reach said radiation detector,

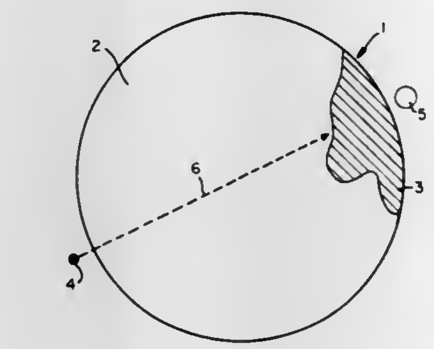

B. detecting solidification in said radiation path by noting a decrease in the amount of radiation reaching said radiation detector.

4,371,978
AUTOMATIC TUNING SYSTEM
Richard J. Lukso, Tucson, Ariz., assignor to Jet Electronics and Technology Incorporated, Grand Rapids, Mich.
Continuation-in-part of Ser. No. 103,430, Dec. 14, 1979, abandoned. This application Apr. 21, 1981, Ser. No. 256,170
Int. Cl.³ H04B *1/38*
U.S. Cl. 455—77 **27 Claims**

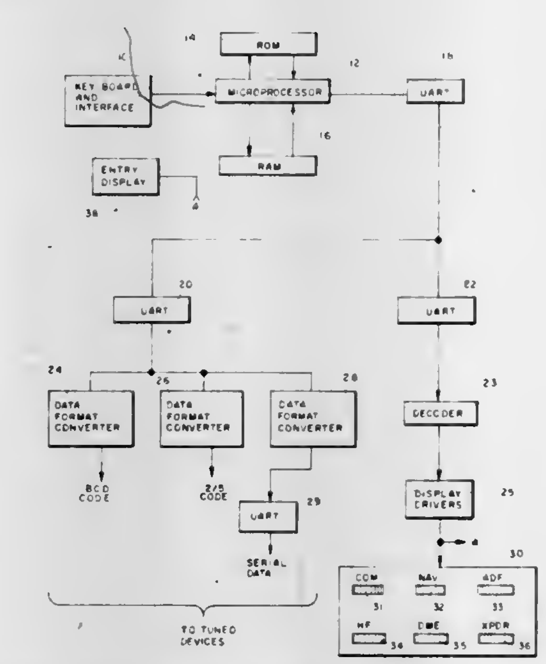

1. A system for providing tuning control signals for automatically controlling the tuning of a plurality of independent simultaneously operable avionic transceivers each of which is assigned a predetermined frequency spectrum mutually exclusive of the frequency spectra of the other transceivers comprising:

data entry means permitting an operator to enter a desired frequency and responsive to such entry for providing signals identifying the desired frequency; and

circuit means coupled to said data entry means for comparing the signals therefrom with stored data defining the frequency spectra associated with the plurality of avionic transceivers and for providing control output signals for tuning the one of said avionic transceivers assigned the frequency spectrum within which the desired frequency lies to the entered frequency without changing the tuning of the avionic transceivers having frequency spectra within which the desired frequency does not lie.

4,371,979
METHOD AND APPARATUS FOR AFFORDING SELECTIVE ACCESS TO ADDITIONAL TELEVISION CHANNELS
Friedrich Vesterling, Blasdell, N.Y., assignor to WNY Hospital Television, Inc., Buffalo, N.Y.
Filed Jun. 3, 1981, Ser. No. 270,147
Int. Cl.³ H04N *7/16;* H04B *1/16;* H04N *5/44*
U.S. Cl. 455—180 **25 Claims**

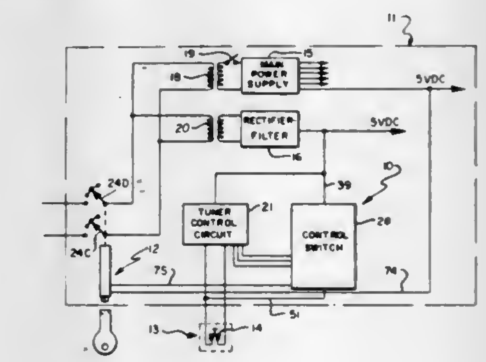

21. The method of affording selective access to a second group of available channels of a television in addition to a first group of available channels of said television, comprising the steps of:

providing immediate access to said first channel group when the viewer turns on said television;

continuously holding closed a manually-operable selector switch for a predetermined time interval in order to select access to the second channel group; and

controlling the operation of a control switch circuit to afford access to said second channel group after passage of said predetermined time interval.

4,371,980
SELF ALIGNING BAND-PASS FILTERING SYSTEM
Bert K. Erickson, Fayetteville, N.Y., assignor to General Electric Company, New York, N.Y.
Filed Jun. 16, 1980, Ser. No. 159,879
Int. Cl.³ H04B *1/18*
U.S. Cl. 455—208 **14 Claims**

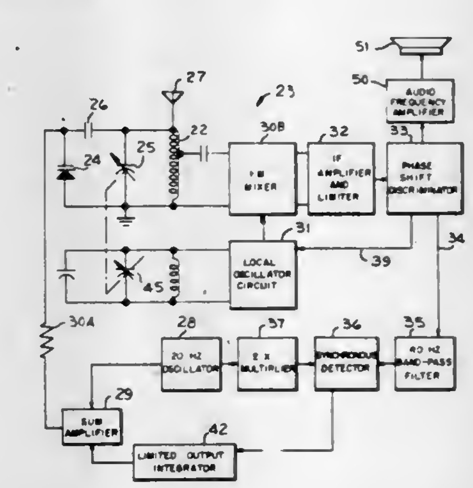

1. A tunable band-pass filtering system responsive to the carrier frequency of a frequency modulated signal in the band-pass for substantial alignment therewith comprising:

a. a tunable band-pass filter having a phase characteristic which is substantially linear to signal frequencies in the mid-band range of the filter and non-linear to signal frequencies at either edge band range of the filter;

b. means for periodically varying the midfrequency of the band-pass filter at a predetermined frequency rate whereby, said filter, in response to an applied frequency modulated signal, provides a similar frequency modulated

signal including phase modulation at said predetermined frequency rate; and

c. means including an amplitude limiter responsive to the magnitude of phase modulation applied at the predetermined frequency rate, to said similar frequency modulated signal for automatically tuning the midfrequency of the filter to reduce the frequency difference between the carrier frequency of the frequency modulated signal and the midfrequency of the filter.

4,371,981
SPECTRAL SQUELCH
Dennis D. King; Ronald L. Breitwisch, and James D. Nickum, all of Cedar Rapids, Iowa, assignors to Rockwell International Corporation, El Segundo, Calif.
Filed Apr. 14, 1980, Ser. No. 140,397
Int. Cl.³ H04B *1/16*
U.S. Cl. 455—219 **2 Claims**

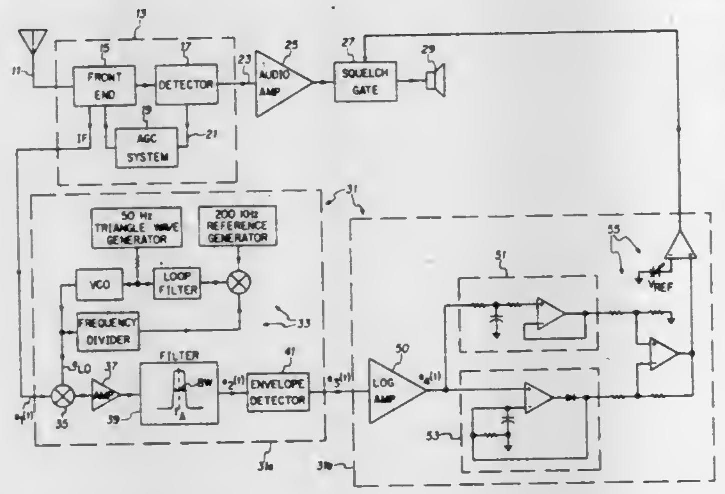

1. A receiver comprising:
demodulator means including at least one of an RF stage or an IF stage,
demodulator intelligence processing means connected to said demodulator means, and including gating means, and
squelch circuit means connected to said demodulator means and to said gating means for controlling said gating means, said squelch circuit means comprising (i) a swept band spectrum analyzer first means connected to said demodulator means for receiving as input a predetermined one of demodulator RF or IF, the received input containing noise and possibly one or more RF or IF carriers, said first means for providing, in response to its received input, a single output whose amplitude varies with time and which is representative of the frequency spectrum of the received input, (ii) second means connected to the single output of said first means, and having a predetermined output amplitude versus input amplitude transfer function, said transfer function being non-linear and for effecting compression, and (iii) third means, connected for receiving an output of said second means, for commanding said gating means to a disable condition whenever a predetermined ratio of (A) strongest carrier in the first means input, to (B) noise in the first means input, is incurred, said commanding occurring at said ratio even if from one instance of commanding to another there is a change in the magnitude of difference between (A) and (B).

4,371,982
MICROWAVE FREQUENCY CONVERTER WITH ECONOMICAL COUPLING
Ben R. Hallford, Wylie, Tex., assignor to Rockwell International Corporation, El Segundo, Calif.
Filed Mar. 13, 1981, Ser. No. 243,231
Int. Cl.³ H04B *1/26*
U.S. Cl. 455—327 **14 Claims**

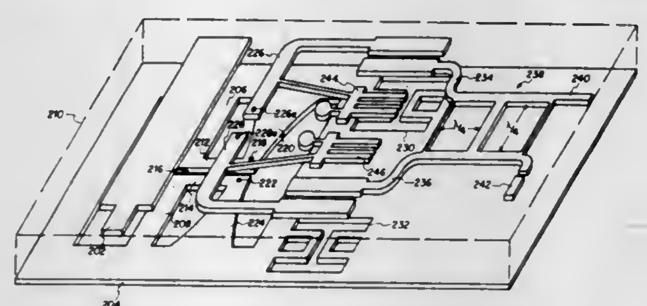

1. A frequency converter comprising in combination:
a mixer bridge for heterodyne modulation product signal generation,
a pair of unbalanced microstrip conductors leading from said bridge respectively to a pair of balun IF rejection filters; and
a second pair of unbalanced microstrip conductors leading respectively from said pair of balun IF rejection filters to a microstrip branch line coupler.

DESIGN PATENTS

GRANTED FEB. 1, 1983

ERRATA

For CLASS	See PATENT NO.
D14–114	267,787
D92–032	267,828

DESIGNS

FEBRUARY 1, 1983

267,752
COMBINED SUN VISOR AND RADIO RECEIVER
Peter G. Fairbrother, Currumbin, Australia, assignor to Glenwood Limited, Hong Kong
Filed May 19, 1980, Ser. No. 150,871
Claims priority, application United Kingdom, Mar. 3, 1980, 80993881
Term of patent 14 years
Int. Cl. D02—*03*
U.S. Cl. D2—241

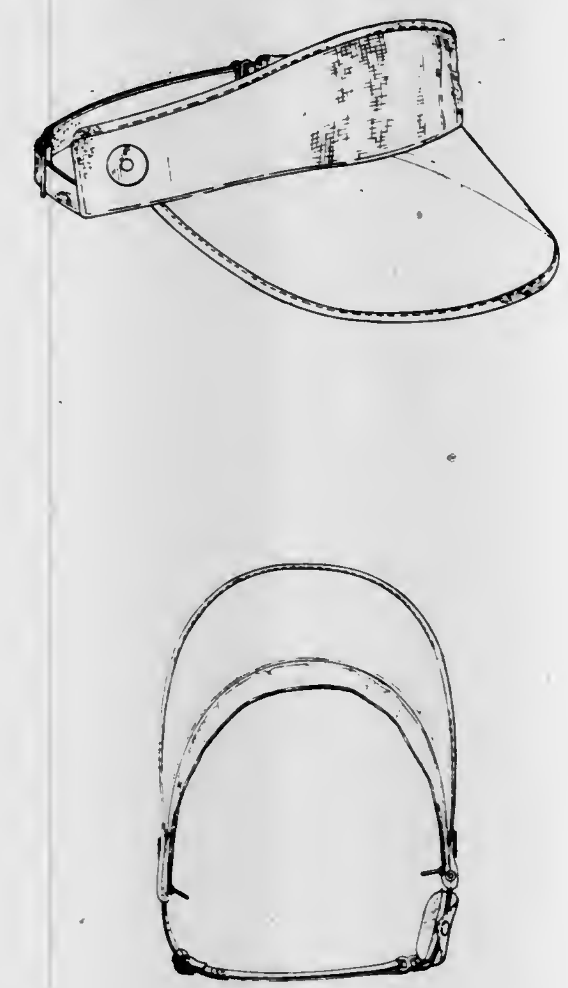

267,753
VEHICLE ARTICLE CARRIER
Bruno Urban, 520 S. Courtland, Park Ridge, Ill. 60068
Filed Jun. 13, 1980, Ser. No. 159,233
Term of patent 14 years
Int. Cl. D12—*16*
U.S. Cl. D3—40

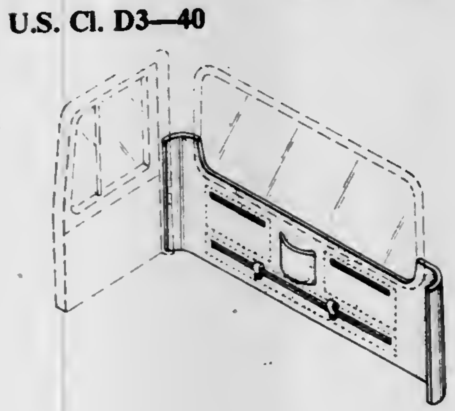

267,754
CHAIN SAW CASE
James C. Carroll, Bartlesville, Okla., and Lewis T. Johnson, Carrollton, Tex., assignors to Phillips Petroleum Company, Bartlesville, Okla.
Filed Jan. 21, 1981, Ser. No. 226,590
Term of patent 14 years
Int. Cl. D3—*02*
U.S. Cl. D3—72

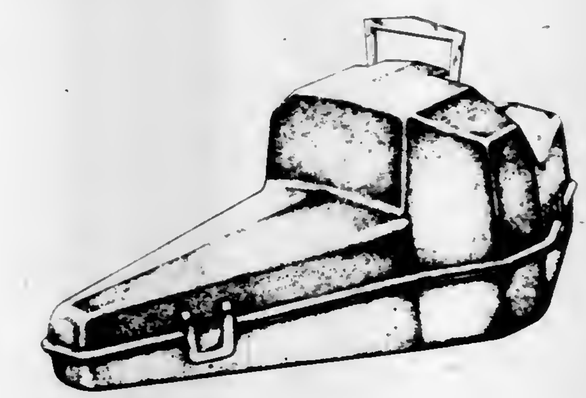

267,755
PAINT ROLLER
Kiyoshi Hori, Suita, Japan, assignor to Nippon Paint Co., Ltd., Osaka, Japan
Filed Apr. 8, 1981, Ser. No. 252,007
Term of patent 14 years
Int. Cl. D4—*04*
U.S. Cl. D4—38.1

267,756
CUSHIONED CHAIR
Pramuan Krabeepetcharat, Mission Viejo, Calif., assignor to dellaRobbia Incorporated, Irvine, Calif.
Filed Jan. 14, 1981, Ser. No. 224,974
Term of patent 14 years
Int. Cl. D6—*01*
U.S. Cl. D6—47

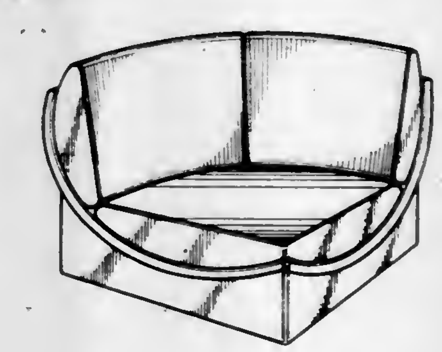

267,757
CHAIR
Roger K. Leib, 1064 S. Crescent Heights Blvd., Los Angeles, Calif. 90035
Filed Jan. 26, 1981, Ser. No. 228,094
Term of patent 14 years
Int. Cl. D6—*01*
U.S. Cl. D6—56

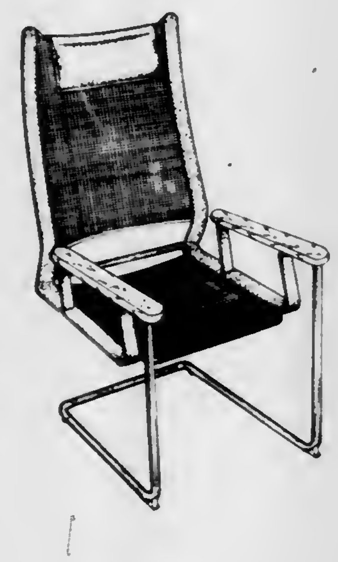

267,758
SOFA
Walter F. Dybal, Westminster, Calif., assignor to Shelly & Anderson Furniture Mfg. Co., Inc., Compton, Calif.
Filed Jan. 26, 1981, Ser. No. 228,666
Term of patent 14 years
Int. Cl. D6—*01*
U.S. Cl. D6—63

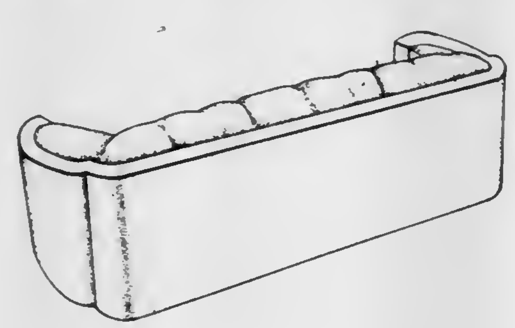

267,759
CUSHIONED SEAT
Pramuan Krabeepetcharat, Mission Viejo, Calif., assignor to dellaRobbia Incorporated, Irvine, Calif.
Filed Jan. 14, 1981, Ser. No. 224,975
Term of patent 14 years
Int. Cl. D6—*01*
U.S. Cl. D6—66

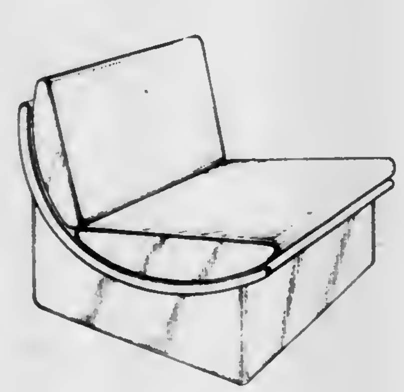

267,760
TOILET PAPER HOLDER
Guy Vrignaud, Grenoble, France, assignor to Allibert S.A., Grenoble, France
Filed Feb. 4, 1981, Ser. No. 231,345
Claims priority, application Hague, Aug. 18, 1980, DM/000 313
Term of patent 14 years
Int. Cl. D23—*02*
U.S. Cl. D6—97

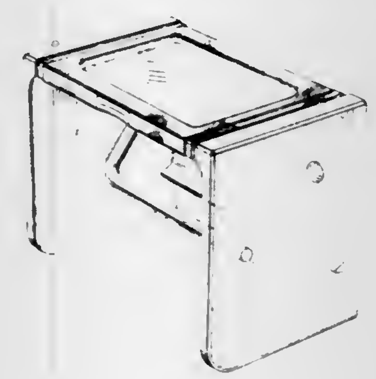

267,761
TOWEL RAIL
Piet Cohen, Amsterdam, Netherlands, assignor to Materias Plasticas, Limitada, Leiria, Portugal
Filed Nov. 4, 1980, Ser. No. 204,061
Claims priority, application Portugal, May 9, 1980, 15.089
Term of patent 14 years
Int. Cl. C23—*02*
U.S. Cl. D6—99

267,762
SPICE RACK
Herbert S. Chase, 1 Lincoln Plz., New York, N.Y. 10023
Filed Oct. 17, 1980, Ser. No. 197,924
Term of patent 14 years
Int. Cl. D6—*04*; D7—*02*
U.S. Cl. D6—113

267,763
IMAGE FRAME
Joel C. Huck, P.O. Box 42230, Houston, Tex. 77042
Division of Ser. No. 954,910, Oct. 26, 1978, Pat. No. Des. 260,718. This application Apr. 24, 1981, Ser. No. 256,995
Term of patent 14 years
Int. Cl. D6—*07*
U.S. Cl. D6—234

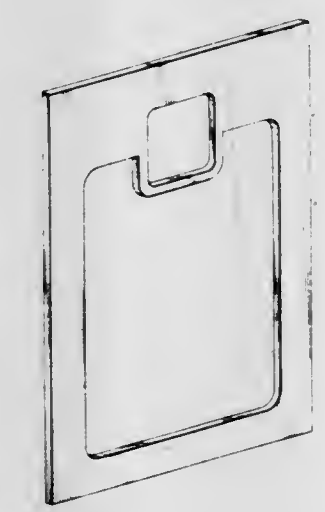

267,764
CORNER LOCK FOR FRAMES
Alf H. Sundberg, Sollentuna, Sweden, assignor to A-Teknik Alf Sundberg Aktiebolag, Sollentuna, Sweden
Filed Dec. 10, 1980, Ser. No. 216,509
Claims priority, application Sweden, Jun. 10, 1980, 80 1171
Term of patent 14 years
Int. Cl. D6—*07*
U.S. Cl. D6—246

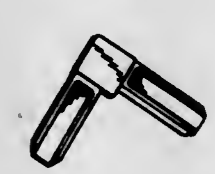

267,765
DRIP PROOF CUP
Myron I. Hankin, 125 South St., Philadelphia, Pa. 19147
Filed Jun. 17, 1980, Ser. No. 160,343
Term of patent 14 years
Int. Cl. D7—*01*
U.S. Cl. D7—9

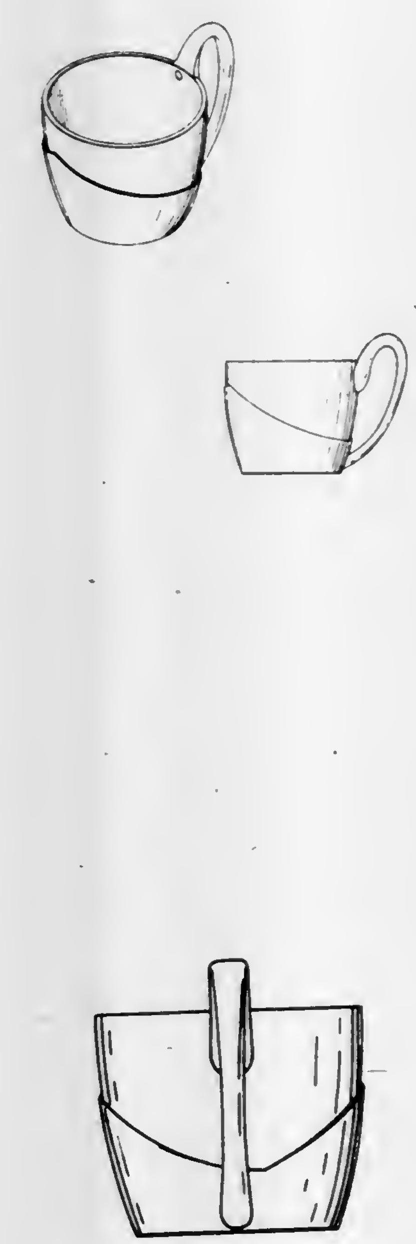

267,766
TRAY
Harold W. Storrs, Nashville, Tenn., assignor to Aladdin Industries, Incorporated, Chicago, Ill.
Filed Nov. 28, 1980, Ser. No. 211,363
Term of patent 14 years
Int. Cl. D7—*99*
U.S. Cl. D7—38

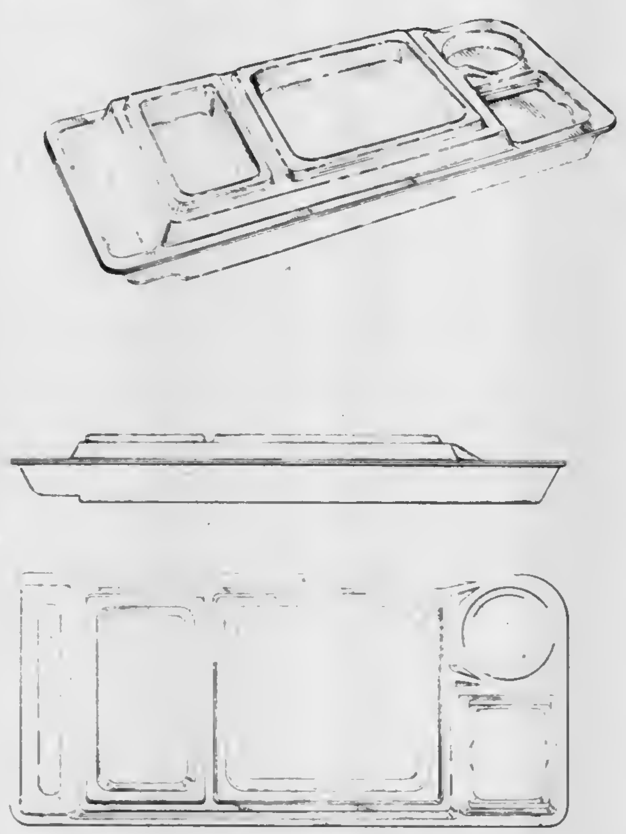

267,767
TRAY
Harold W. Storrs, Nashville, Tenn., assignor to Aladdin Industries, Incorporated, Chicago, Ill.
Filed Nov. 28, 1980, Ser. No. 211,364
Term of patent 14 years
Int. Cl. D7—*99*
U.S. Cl. D7—38

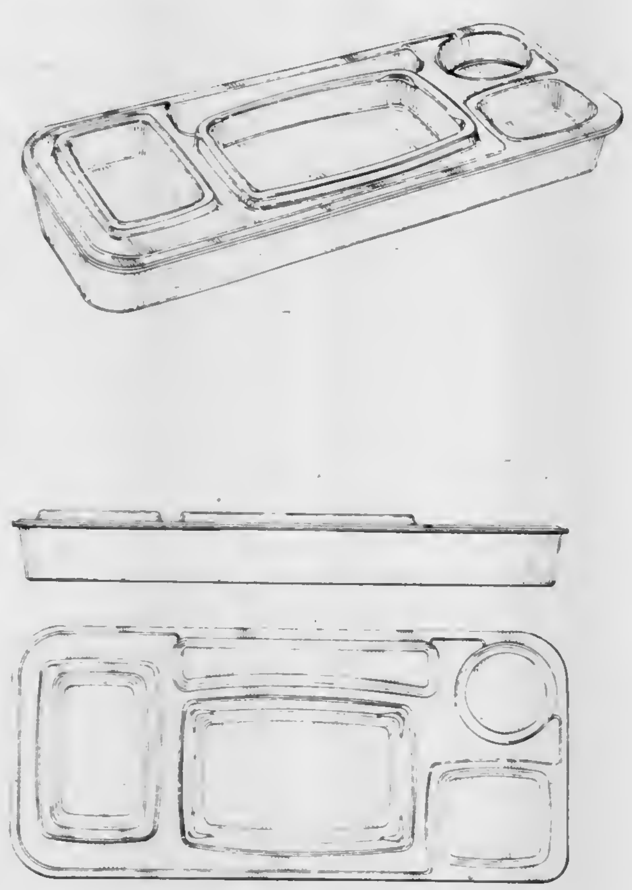

267,768
COMBINED PASTA DRYING RACK AND TRIVET
James E. Duggan, 1991 Dellwood Dr. NW., Atlanta, Ga. 30309
Filed Aug. 14, 1980, Ser. No. 178,378
Term of patent 14 years
Int. Cl. D7—*04*
U.S. Cl. D7—76

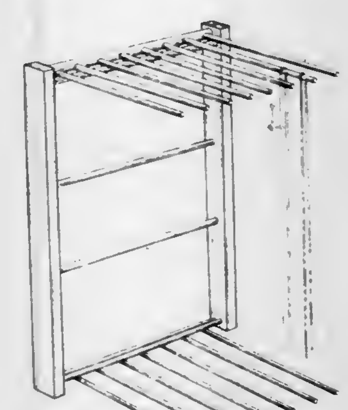

267,769
BARBEQUE SMOKER
Ozell J. Pope, 1820 W. Lindsey, Norman, Okla. 73070
Filed Aug. 25, 1980, Ser. No. 180,632
Term of patent 7 years
Int. Cl. D7—*02*
U.S. Cl. D7—332

267,770
COOKING APPLIANCE
Karl Fischer, Am Gaensberg 8, 7519 Oberderdingen, Fed. Rep. of Germany
Filed Jun. 9, 1978, Ser. No. 913,992
Claims priority, application Fed. Rep. of Germany, Dec. 14, 1977, MRII/85 Br
Term of patent 14 years
Int. Cl. D7—*02*
U.S. Cl. D7—346

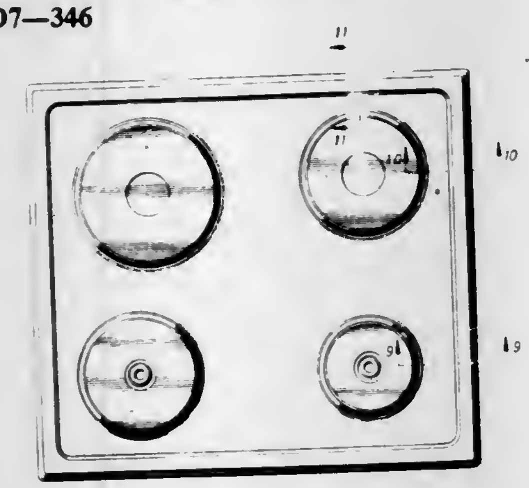

267,771
DOUGH MACHINE
Alfredo Cavalli, Via Monza 97, 20060 Gessate, Milano, Italy
Filed Nov. 19, 1980, Ser. No. 208,429
Term of patent 14 years
Int. Cl. D07—*04*; D15—*08*
U.S. Cl. D7—376

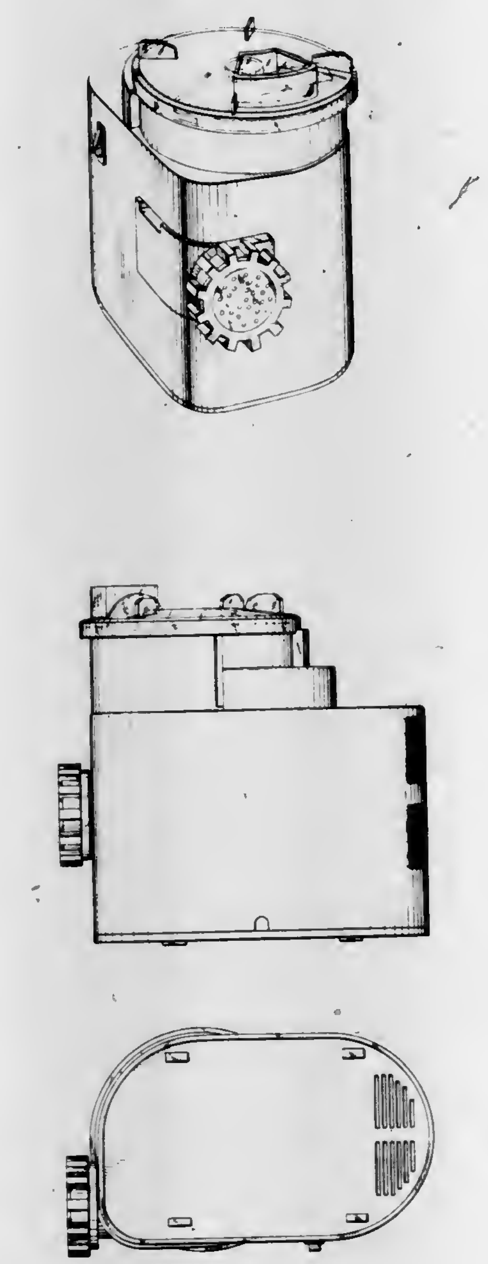

267,772
SHOVEL
Lowell D. Heimdal, Joice, Iowa, assignor to North Iowa Tool and Die, Lake Mills, Iowa
Filed Oct. 6, 1980, Ser. No. 194,665
Term of patent 14 years
Int. Cl. D8—*1*
U.S. Cl. D8—9

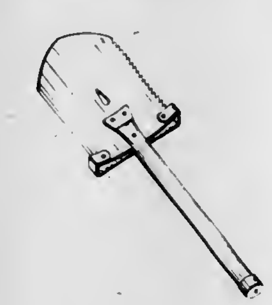

267,773
SCISSORS
Erkki O. Linden, Billnäs, Finland, assignor to Oy. Fiskars AB, Helsinki, Finland
Filed Feb. 29, 1980, Ser. No. 126,151
Term of patent 14 years
Int. Cl. D8—*03*
U.S. Cl. D8—57

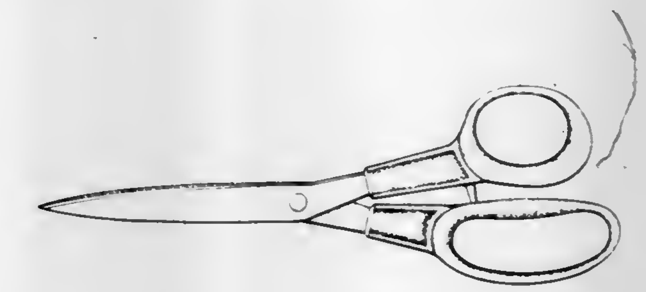

267,774
PULL
Teresa R. B. Pittenger, Rockford, Ill., assignor to Amerock Corporation, Rockford, Ill.
Filed Dec. 24, 1980, Ser. No. 219,967
Term of patent 14 years
Int. Cl. D8—*06*
U.S. Cl. D8—317

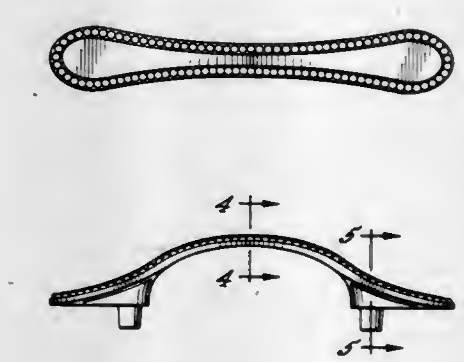

267,775
INSULATION SUPPORT
J. L. Holcombe, Dallas, Tex., assignor to Emerson H. Mizell, Atlanta, Ga.
Filed May 5, 1980, Ser. No. 146,288
Term of patent 14 years
Int. Cl. D8—*08*
U.S. Cl. D8—380

267,776
MOUNTING STRIP FOR ELECTRIC CABLES OR SIMILAR ARTICLES
Lennart Holgersson, Bredaryd, and Berne Mahl, Smalandsstenar, both of Sweden, assignors to Telefonaktiebolaget L M Ericsson, Stockholm, Sweden
Filed Oct. 23, 1980, Ser. No. 200,086
Claims priority, application Sweden, Apr. 24, 1980, 80-0845
Term of patent 14 years
Int. Cl. D8—*08*
U.S. Cl. D8—396

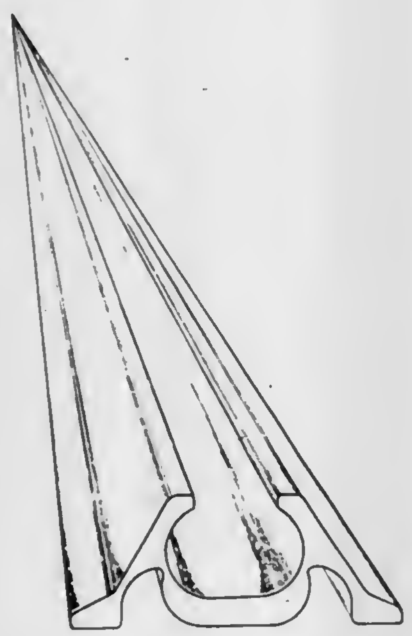

267,777
COMBINED PACKAGING AND DISPLAY CONTAINER
Kenneth Niimi, Highland Park, and Richard J. Simmons, Carol Stream, both of Ill., assignors to Reed-Union Corporation, Chicago, Ill.
Filed Jan. 16, 1981, Ser. No. 225,708
Term of patent 14 years
Int. Cl. D9—*03*
U.S. Cl. D9—347

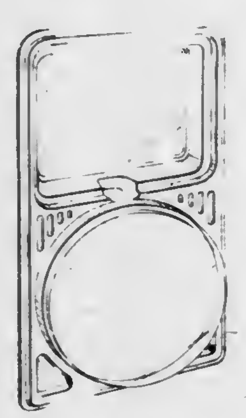

267,778
BOX
Toyohiro Nagata, 2-7, Higashi Kozucho, Ten'nojiku, Osaka, Japan
Filed Oct. 9, 1979, Ser. No. 82,959
Term of patent 14 years
Int. Cl. D9—*03*
U.S. Cl. D9—424

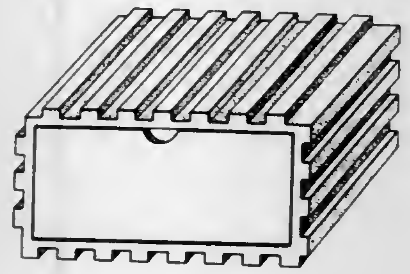

267,779
CONTAINER TOP
Donald J. Roth, Westport, Conn., assignor to The Continental Group, Inc., New York, N.Y.
Filed Sep. 26, 1980, Ser. No. 191,234
Term of patent 14 years
Int. Cl. D9—*99*
U.S. Cl. D9—434

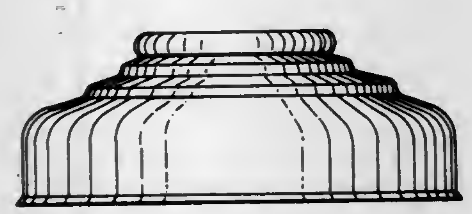

267,780
CONTAINER TOP
John Walter, Evergreen Park, Ill., assignor to The Continental Group, Inc., New York, N.Y.
Filed Sep. 26, 1980, Ser. No. 191,238
Term of patent 14 years
Int. Cl. D9—*99*
U.S. Cl. D9—434

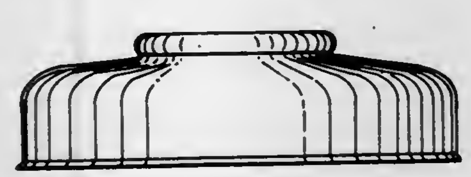

267,781
DISPENSING CAP FOR A CONTAINER
Joseph Thompson, Upper Saddle River, N.J., assignor to Sterling Drug Inc., New York, N.Y.
Filed Jul. 14, 1980, Ser. No. 168,141
Term of patent 14 years
Int. Cl. D9—*07*
U.S. Cl. D9—447

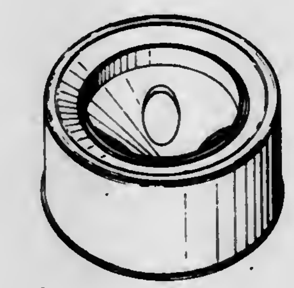

267,782
DISPENSING CAP FOR A CONTAINER
Joseph Thompson, Upper Saddle River, N.J., assignor to Sterling Drug Inc., New York, N.Y.
Filed Jul. 14, 1980, Ser. No. 168,142
Term of patent 14 years
Int. Cl. D9—*07*
U.S. Cl. D9—447

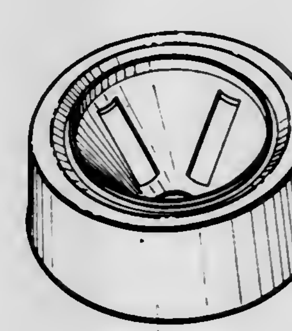

267,783
CLEANER CAN
William J. Lang, P.O. Box 1731, Central Valley, Calif. 96019
Filed Jan. 17, 1980, Ser. No. 113,032
Term of patent 14 years
Int. Cl. D9—*99*
U.S. Cl. D9—499

267,784
STOP WATCH
Jack W. Heuer, Bern, Switzerland, assignor to Heuer-Leonidas S.A., Biel, Switzerland
Filed Jan. 12, 1981, Ser. No. 224,301
Claims priority, application Hague, Jul. 18, 1980, DM/000273
Term of patent 14 years
Int. Cl. D10—*02*
U.S. Cl. D10—30

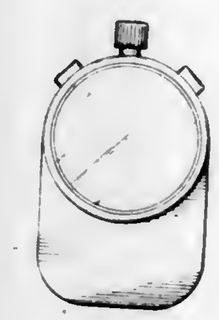

267,785
STOP WATCH
Jack W. Heuer, Bern, Switzerland, assignor to Heuer-Leonidas S.A., Biel, Switzerland
Filed Jan. 12, 1981, Ser. No. 224,302
Claims priority, application Hague, Jul. 18, 1980, DM/000273
Term of patent 14 years
Int. Cl. D10—*02*
U.S. Cl. D10—30

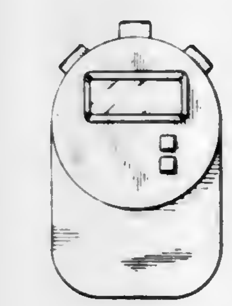

267,786
SALT METER
Charles S. Wolf, Studio City, Calif., assignor to Life Power Products, Inc.
Filed Dec. 12, 1980, Ser. No. 215,673
Term of patent 14 years
Int. Cl. D10—*04*
U.S. Cl. D10—81

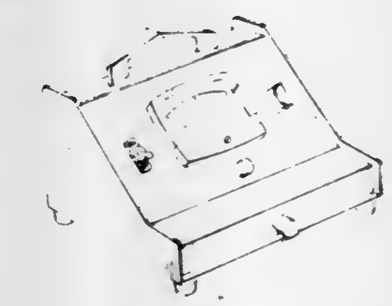

267,787
WARNING LAMP
Eugen Braun, Hasseler Str. 50-54, 4020 Mettmann, Fed. Rep. of Germany
Filed Jul. 25, 1980, Ser. No. 172,465
Claims priority, application Fed. Rep. of Germany, Jan. 31, 1980, MR959
Term of patent 14 years
Int. Cl. D10—*06*; D26—*02*
U.S. Cl. D14—114

267,788
NECKLACE
Marina Bulgari, Athens, Greece, assignor to Zoldia Anstalt, Vaduz, Liechtenstein
Filed Nov. 18, 1980, Ser. No. 207,987
Claims priority, application Italy, May 27, 1980, 35779/80[U]
Term of patent 14 years
Int. Cl. D11—*01*
U.S. Cl. D11—5

267,789
NECKLACE PENDANT
Carol M. Winandy, 1295 Des Plaines Ave., Des Plaines, Ill. 60018
Filed Jan. 2, 1981, Ser. No. 222,026
Term of patent 14 years
Int. Cl. D11—*01*
U.S. Cl. D11—81

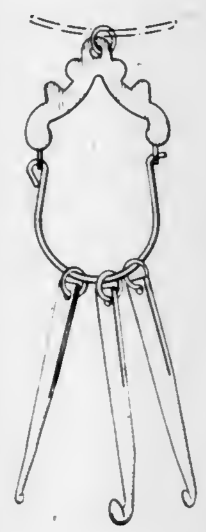

267,790
PENDANT
Charles Eddinger, P.O. Box 487, Geyserville, Calif. 95441
Filed Dec. 11, 1980, Ser. No. 215,504
Term of patent 14 years
Int. Cl. D11—*01*
U.S. Cl. D11—83

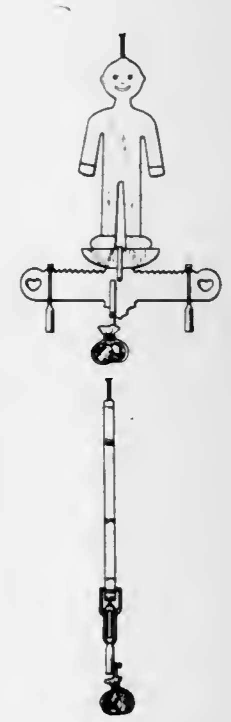

267,791
PLAQUE
Karen G. Clark, 650 Cherry St., Hammond, Ind. 46324
Filed Feb. 5, 1981, Ser. No. 233,072
Term of patent 14 years
Int. Cl. D11—*02*
U.S. Cl. D11—137

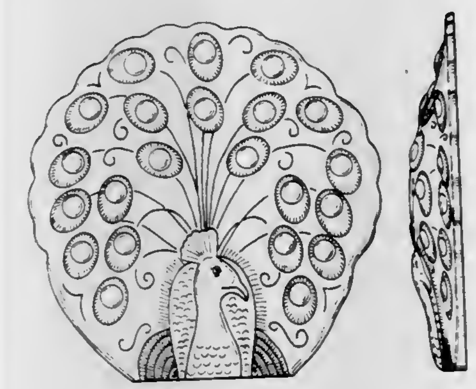

267,792
MOTOR TRICYCLE
Yasuhiro Ohba, Fukuoka, Japan, assignor to Honda Giken Kogyo Kabushiki Kaisha, Tokyo, Japan
Filed Jun. 26, 1981, Ser. No. 277,502
Claims priority, application Japan, Dec. 26, 1980, 55-54959
Term of patent 14 years
Int. Cl. D12—*11*
U.S. Cl. D12—110

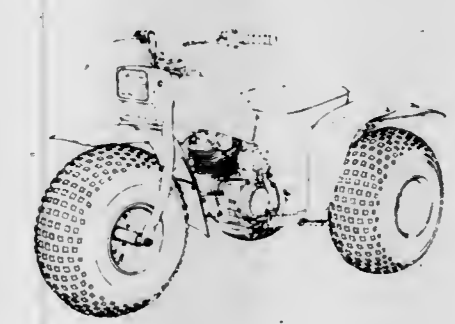

267,793
DESIGN FOR A PICK-UP TRUCK BED ENCLOSURE
Wilbert L. Skidmore, Benzonia, Mich., assignor to Glas-Tek, Inc., Benzonia, Mich.
Filed Apr. 12, 1979, Ser. No. 29,399
Term of patent 14 years
Int. Cl.^{3} D12—*16*
U.S. Cl. D12—156

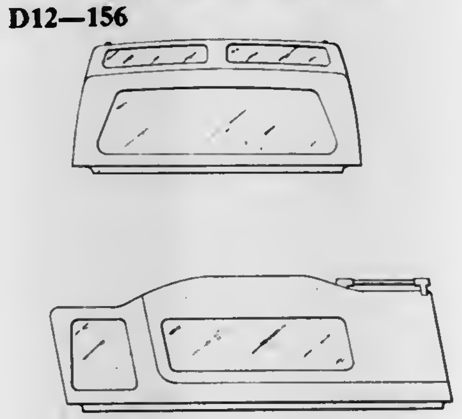

267,794
AIRCRAFT DESIGN
Hubert Krojer, Bermatingen, Fed. Rep. of Germany, assignor to Dornier GmbH, Fed. Rep. of Germany
Filed Dec. 17, 1979, Ser. No. 104,708
Term of patent 14 years
Int. Cl. D12—*07*
U.S. Cl. D12—337

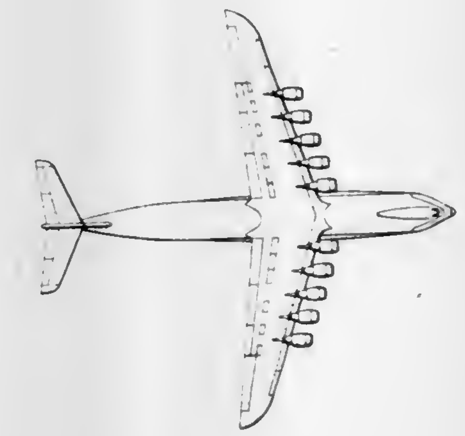

267,795
BATTERY HOLDER
William D. Mallon, Centerville, Va., assignor to Perrott Engineering Labs, Inc., Arlington, Va.
Filed May 27, 1980, Ser. No. 153,544
Term of patent 14 years
Int. Cl. D13—*02*
U.S. Cl. D13—10

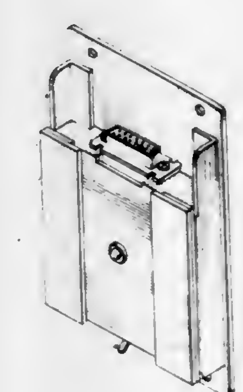

267,796
ORNAMENTAL DESIGN FOR A POWER SUPPLY UNIT
Kenneth C. Litt, and Jean C. Fielder, both of Silver Spring, Md., assignors to Pace Incorporated, Laurel, Md.
Filed Mar. 27, 1980, Ser. No. 134,480
Term of patent 14 years
Int. Cl. D13—*03*
U.S. Cl. D13—11

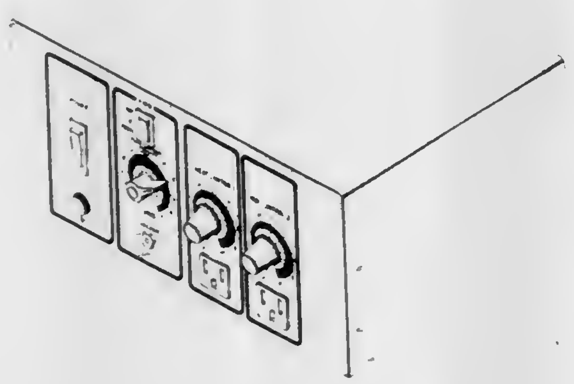

267,797
VIDEO TAPE RECORDER
Masaharu Kobayashi, Ohmiya, and Mitsuru Inaba, Yokohama, both of Japan, assignors to Sony Corporation, Tokyo, Japan
Filed Sep. 12, 1980, Ser. No. 186,692
Claims priority, application Japan, Mar. 12, 1980, 55-9668
Term of patent 14 years
Int. Cl. D14—*01, 03*
U.S. Cl. D14—2

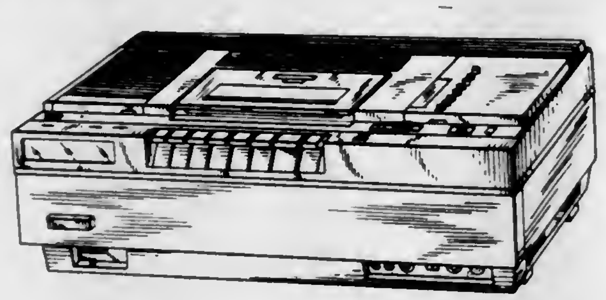

267,798
TAPE CARTRIDGE
Frank Dekker, Santa Ana, and Isaac R. Cherry, Mission Viejo, both of Calif., assignors to Del Mar Avionics, Irvine, Calif.
Filed Oct. 17, 1980, Ser. No. 197,927
Term of patent 14 years
Int. Cl. D14—*01*
U.S. Cl. D14—11

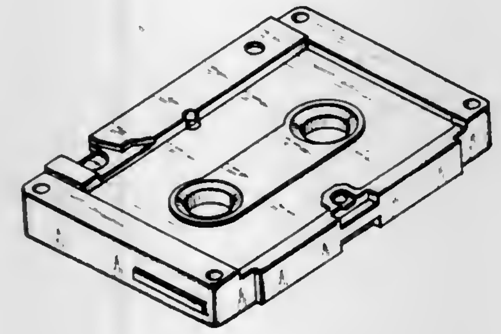

267,799
FACSIMILE TRANSCEIVER
Akira Esaki; Tsutomu Yamasaki, and Keiji Sakata, all of Osaka, Japan, assignors to Sharp Corporation, Osaka, Japan
Filed Sep. 18, 1980, Ser. No. 188,382
Claims priority, application Japan, Mar. 22, 1980, 55/11429
Term of patent 14 years
Int. Cl. D14—*01, 02, 03*
U.S. Cl. D14—94

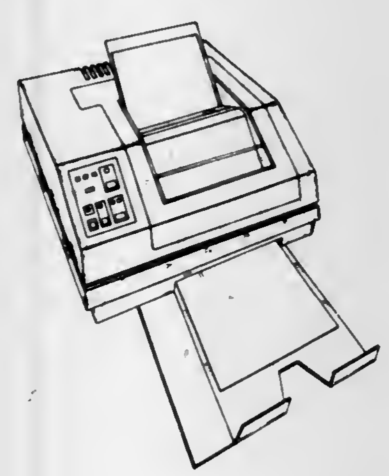

267,800
MOBILE ASPHALT PAVEMENT SEALING MACHINE
Jimmy W. Tate, 22 W. Watson St., Anniston, Ala. 36201
Filed Jun. 23, 1980, Ser. No. 162,178
Term of patent 14 years
Int. Cl. D15—*04*
U.S. Cl. D15—13

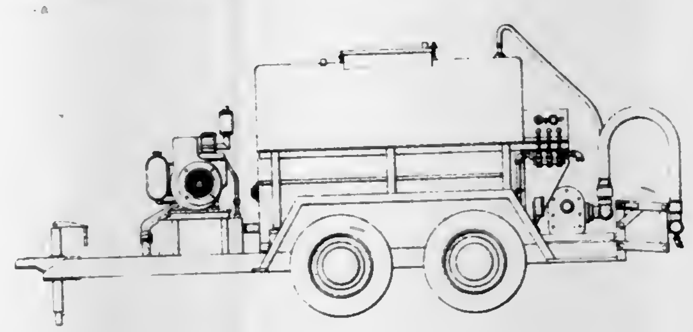

267,801
SORTER WITH DOCUMENT HOLDING SHELVES
William L. Plumb, New York, and Andrew T. Serbinski, Brooklyn, both of N.Y., assignors to Nashua Corporation, Nashua, N.H.
Filed Apr. 12, 1979, Ser. No. 29,333
Term of patent 14 years
Int. Cl. D16—*03*
U.S. Cl. D16—30

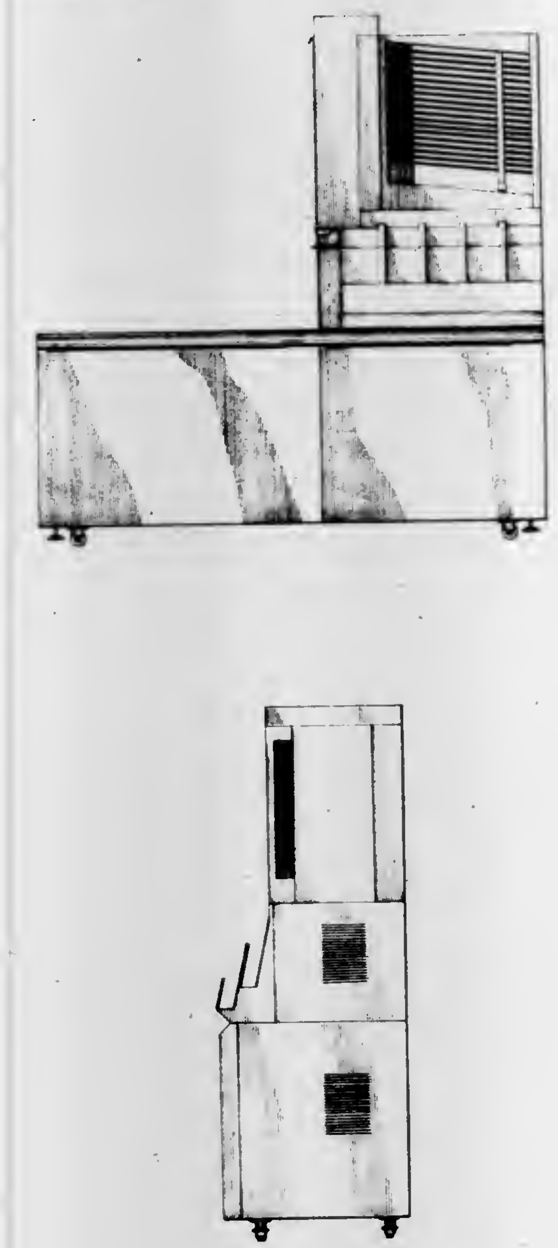

267,802
ELECTRONIC COPYING MACHINE
Shigeki Yasutani, Kashiwa, Japan, assignor to Tokyo Shibaura Denki Kabushiki Kaisha, Japan
Filed Feb. 4, 1981, Ser. No. 231,503
Claims priority, application Japan, Aug. 5, 1980, 55-31738
Term of patent 14 years
Int. Cl. D16—*03*
U.S. Cl. D16—31

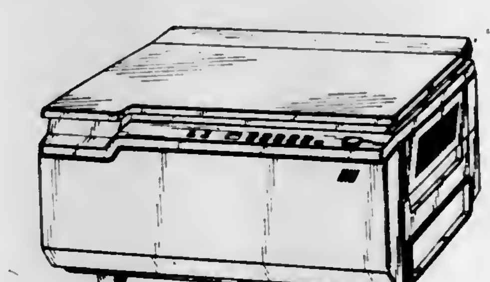

267,803
CONTINUOUS PAPER INPUT MODULE
Robert E. Kalvitis, Fairport, N.Y., assignor to Xerox Corporation, Stamford, Conn.
Continuation-in-part of Ser. No. 811,018, Jun. 29, 1977. This application Apr. 9, 1979, Ser. No. 28,407
Term of patent 14 years
Int. Cl. D16—*03*
U.S. Cl. D16—32

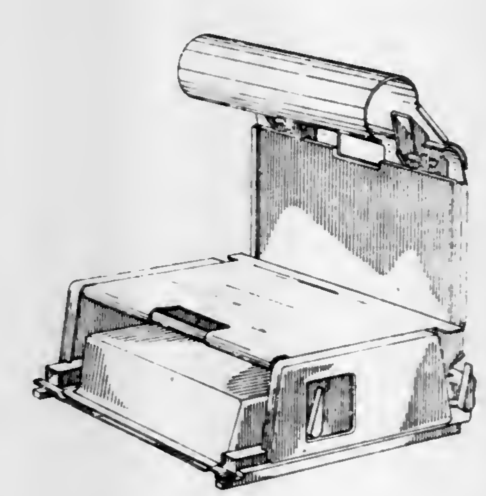

267,804
TRACTOR FEED MODULE FOR CONTINUOUS PAPER
Robert E. Kalvitis, Fairport, N.Y., assignor to Xerox Corporation, Stamford, Conn.
Continuation-in-part of Ser. No. 811,020, Jun. 29, 1977. This application Apr. 9, 1979, Ser. No. 28,408
Term of patent 14 years
Int. Cl. D16—*03*
U.S. Cl. D16—32

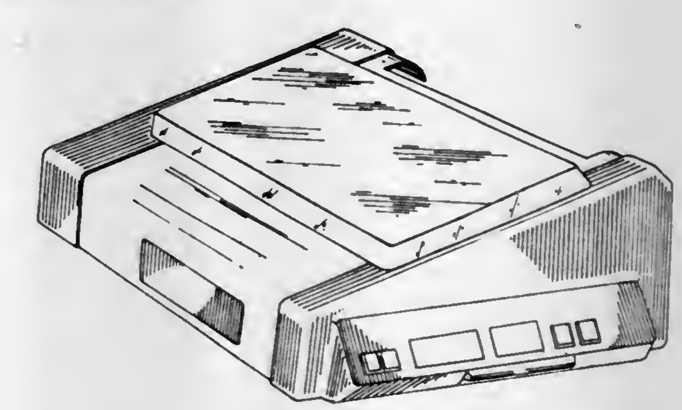

267,805
PORTABLE ELECTRONIC TYPEWRITER
Mario Bellini, Milan, Italy, assignor to Ing. C. Olivetti & C., S.p.A., Ivrea, Italy
Filed Mar. 17, 1981, Ser. No. 244,737
Claims priority, application Italy, Sep. 17, 1980, 53514-B/80
Term of patent 14 years
Int. Cl. D18—*01*

U.S. Cl. D18—1

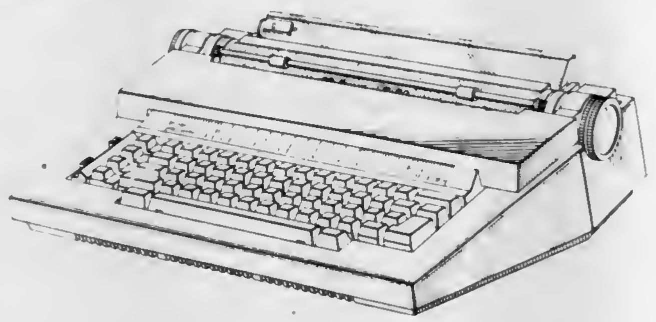

267,806
PORTABLE CARD IMPRINTER
Charles W. Panter, 841 N. York Rd., Apt. 232, Elmhurst, Ill. 60126
Filed Oct. 27, 1980, Ser. No. 200,761
Term of patent 14 years
Int. Cl. D18—*02*

U.S. Cl. D18—14

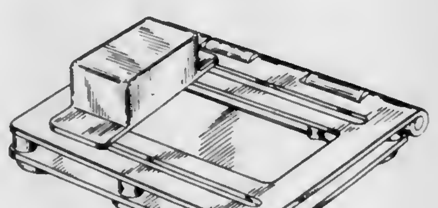

267,807
CALENDAR
Robert C. Burroughs, 408 W. Deer Park Rd., Gaithersburg, Md. 20760
Filed Apr. 8, 1980, Ser. No. 138,459
Term of patent 14 years
Int. Cl. D19—*03*

U.S. Cl. D19—24

267,808
COMBINED PERIODICAL AND WRITING INSTRUMENT HOLDER
Thomas J. Russo, 2228 Bergen Ave., Brooklyn, N.Y. 11234
Filed Jul. 18, 1979, Ser. No. 58,601
Term of patent 14 years
Int. Cl. D19—*02*

U.S. Cl. D19—78

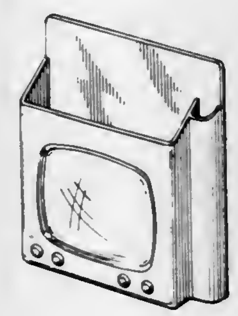

267,809
CLIPBOARD
Vernon L. Lowery, Anaheim, and Richard Vega, Westminster, both of Calif., assignors to Pfeiler & Associates, Engineers, Inc., Fullerton, Calif.
Filed Feb. 12, 1981, Ser. No. 234,098
Term of patent 7 years
Int. Cl. D19—*99*

U.S. Cl. D19—88

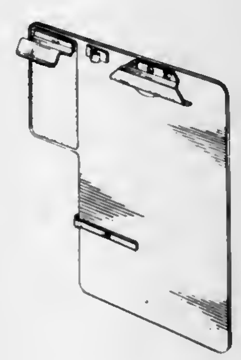

267,810
COMBINED SIGN SUPPORT AND CLIP THEREFOR
Nicholas M. Orsos, 3 Kurrawa Ave., Coogee Beach, N.S.W., Australia
Filed May 8, 1980, Ser. No. 147,791
Term of patent 14 years
Int. Cl. D20—*03*; D8—*08*

U.S. Cl. D20—43

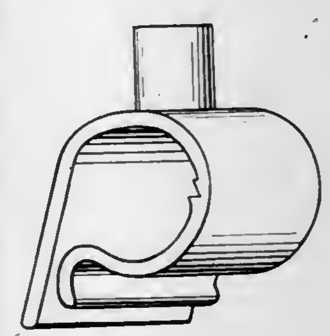

267,811
SIMULATIVE TENT
llip M. Grebe, 4050 S. Asbury, Indianapolis, Ind. 46227
Filed Sep. 15, 1980, Ser. No. 187,190
Term of patent 14 years
Int. Cl. D21—*04*

S. Cl. D21—253

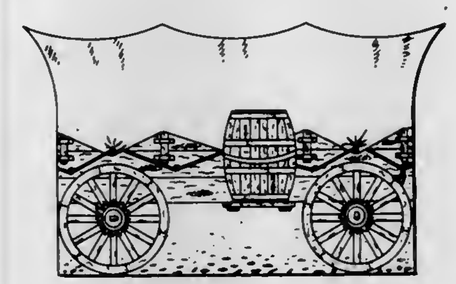

267,812
DUAL SHOWER HEAD
Andreas Haug, Altensteig, Fed. Rep. of Germany, assignor to Hans Grohe GmbH & Co. KG, Fed. Rep. of Germany
Filed Sep. 15, 1981, Ser. No. 302,586
Claims priority, application Fed. Rep. of Germany, Mar. 16, 1981, 1029 OB
Term of patent 14 years
Int. Cl. D23—*01*

U.S. Cl. D23—35

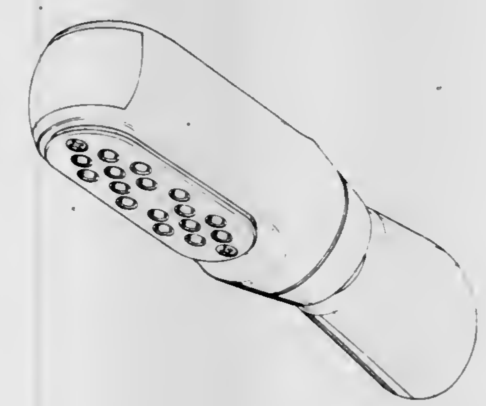

267,813
BATHTUB
William L. Lippert, Jr., Colgate, and Wayne M. Lippert, Wauwatosa, both of Wis., assignors to Lippert Corporation, Menomonee Falls, Wis.
Filed Apr. 7, 1980, Ser. No. 137,884
Term of patent 14 years
Int. Cl. D23—*07*

U.S. Cl. D23—55

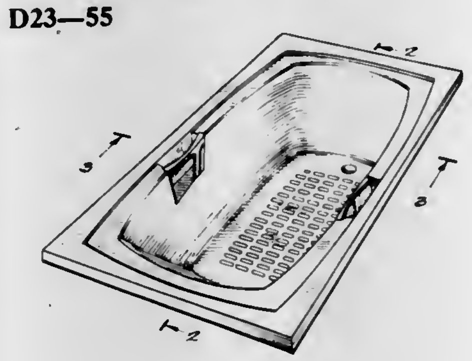

267,814
PET NURSING NIPPLE
Irving Bressler, Brooklyn, N.Y., assignor to Four Paws Products, Ltd., Central Islip, N.Y.
Filed Aug. 1, 1980, Ser. No. 174,719
Term of patent 14 years
Int. Cl. D24—*05*

U.S. Cl. D24—46

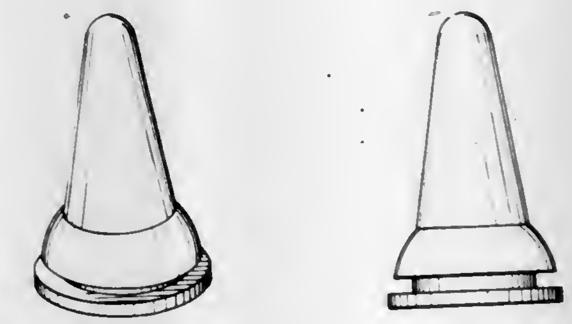

267,815
CHEST DRAINAGE BOTTLE
Donald P. Elliott, Denver; William L. Halseth, Parker, and William R. King, Lakewood, all of Colo., assignors to C. R. Bard Inc., Murray Hill, N.J.
Filed May 26, 1981, Ser. No. 266,981
Term of patent 14 years
Int. Cl. D24—*02*

U.S. Cl. D24—59

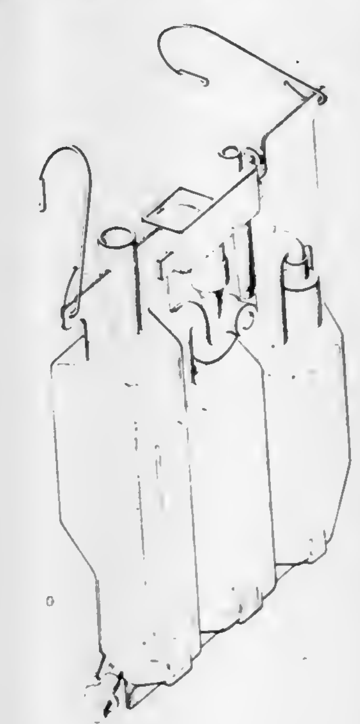

267,816
HEAT LAMP STAND
Donald F. Tripp, 461 Butterfield, East Lansing, Mich. 48823
Filed Aug. 29, 1980, Ser. No. 182,776
Term of patent 14 years
Int. Cl. D24—*99*; D26—*05*
U.S. Cl. D24—68

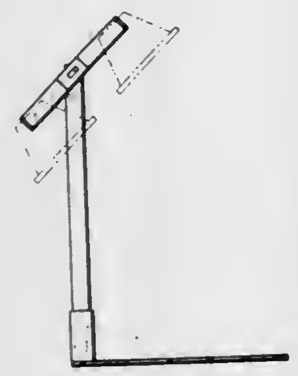

267,817
TRIPOD LADDER
Roger G. Garrett, 8518 Marklawn Dr., Richmond, Va. 23229
Filed Aug. 20, 1979, Ser. No. 68,256
Term of patent 14 years
Int. Cl. D6—*06*
U.S. Cl. D25—63

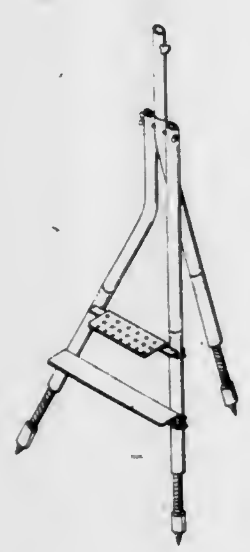

267,818
COMBINED SIGNAL, EMERGENCY AND SAFETY WARNING LIGHT FOR TRUCKS
Robert W. Lynn, and Judith B. Lynn, both of 405 Faye La., Redondo Beach, Calif. 90277
Filed Jul. 8, 1980, Ser. No. 166,820
Term of patent 14 years
Int. Cl. D26—*06*
U.S. Cl. D26—35

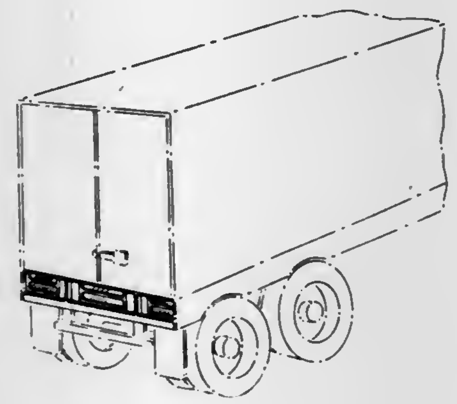

267,819
COMBINED INDUSTRIAL DIVER'S UNDERWATER LIGHT AND ULTRAVIOLET INSPECTION LIGHT
Jack Birns, 901 Malcolm Ave., Los Angeles, Calif. 90024
Filed Sep. 29, 1980, Ser. No. 192,091
Term of patent 14 years
Int. Cl. D26—*02*
U.S. Cl. D26—37

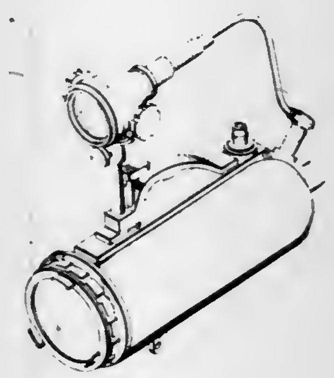

267,820
GAS LIGHTER
Suteo Tomita, Ichikawashi, Japan, assignor to Iwatani Sangyo Kabushiki Kaisha, Osaka, Japan
Filed Feb. 25, 1980, Ser. No. 124,272
Claims priority, application Japan, Sep. 25, 1979, 54-40472
Term of patent 14 years
Int. Cl. D27—*05*
U.S. Cl. D27—42

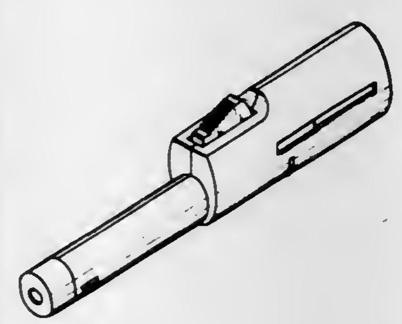

267,821
HAIR CURLER SET
Gordon T. Guth, Evanston; Douglas G. Long, Lombard, and Bernard B. Bluestein, Des Plaines, all of Ill., assignors to Sunbeam Corporation, Chicago, Ill.
Filed Jan. 12, 1981, Ser. No. 224,248
Term of patent 14 years
Int. Cl. D28—*03*
U.S. Cl. D28—38

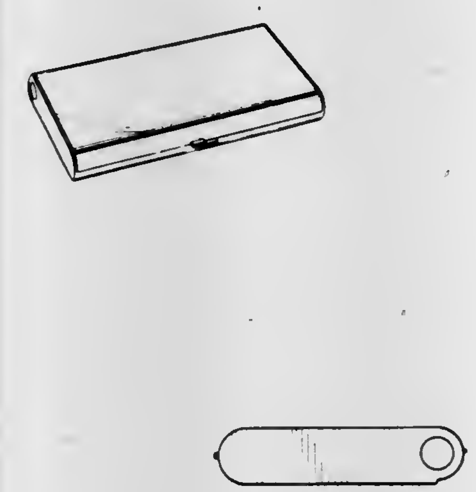

267,822
DOUBLE-ENDED COSMETIC CASE
Phillip Katz, Slope Rise, and Richard Sonnenblick, Malborough, both of N.J., assignors to Cosrich, Inc., Perth Amboy, N.J.
Filed Jan. 2, 1981, Ser. No. 222,520
Term of patent 7 years
Int. Cl. D28—*03*
U.S. Cl. D28—86

267,823
SEWER LINE PROOFER TOOL
Charles J. Prange, Cridersville, Ohio, assignor to Sewer Rodding Equipment Co., Lima, Ohio
Filed Dec. 22, 1980, Ser. No. 218,569
Term of patent 14 years
Int. Cl. D15—*05*
U.S. Cl. D32—14

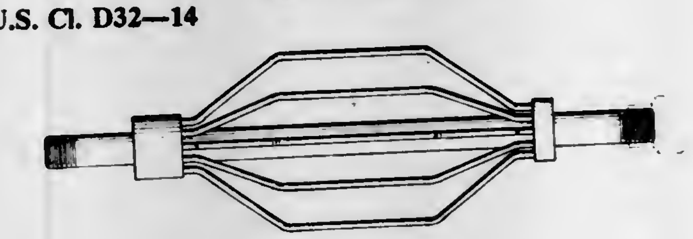

267,824
FLOOR MAINTENANCE MACHINE
James P. Mannelly, Edina, Minn., assignor to Tennant Company, Minneapolis, Minn.
Filed Dec. 18, 1980, Ser. No. 217,775
Term of patent 14 years
Int. Cl. D15—*05*
U.S. Cl. D32—16

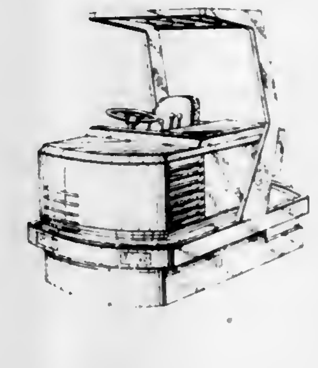

267,825
SNOW REMOVAL DEVICE FOR VEHICLES
James C. Samuels, 324 Pinecrest Rd., Springfield, Pa. 19064
Filed Oct. 7, 1980, Ser. No. 194,894
Term of patent 14 years
Int. Cl.[3] D7—*05*
U.S. Cl. D32—41

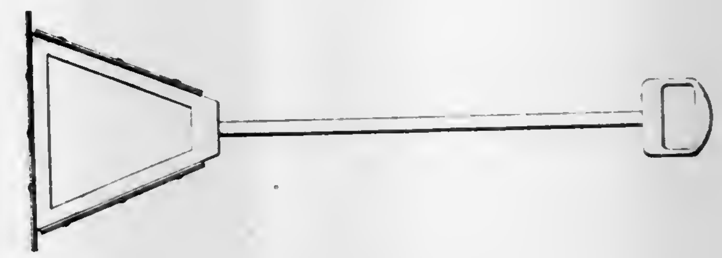

267,826
HAND SCRAPER
Donald Gringer, 1513 Olmstead Ave., Bronx, N.Y. 10462
Filed Nov. 19, 1980, Ser. No. 208,409
Term of patent 14 years
Int. Cl. D7—*05*
U.S. Cl. D32—48

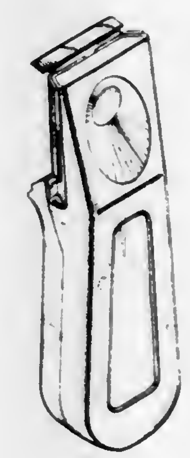

267,827
SPONGE APPLICATOR, OR THE LIKE
James R. Gross, Bartlett, Ill., assignor to Abbott Laboratories, North Chicago, Ill.
Filed Oct. 9, 1980, Ser. No. 195,545
Term of patent 14 years
Int. Cl. D7—*05*

U.S. Cl. D32—51

267,828
SHOE SOLE MATERIAL
Leon H. Cohen, 150 Gould St., Needham Heights, Mass. 02194
Filed Mar. 28, 1980, Ser. No. 134,851
Term of patent 14 years
Int. Cl. D5—*06*

U.S. Cl. D92—32

267,829
VAULT DOME
Richard Cook, 624 10th Ave. North, Nampa, Id. 83651
Filed Aug. 8, 1980, Ser. No. 176,477
Term of patent 14 years
Int. Cl. D31—*00*

U.S. Cl. D19—12

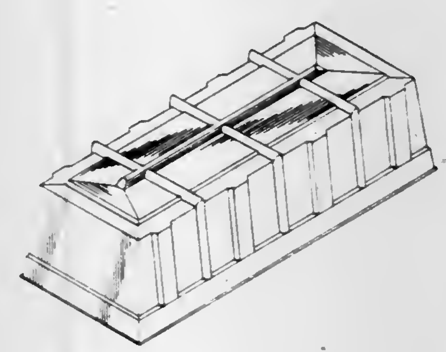

LIST OF PATENTEES

TO WHOM

PATENTS WERE ISSUED ON THE 1ST DAY OF FEBRUARY, 1983

NOTE.—Arranged in accordance with the first significant character or word of the name (in accordance with city and telephone directory practice).

A. C. Egerton Limited: *See—*
Thompson, Roy F., 4,371,578, Cl. 428-192.000.
A/S Ferrosan: *See—*
Braestrup, Claus T.; Nielsen, Mogens C.; Christensen, Joergen A.; Engelstoft, Mogens; Schou, Henning; Eder, Ulrich; Neef, Gunter; Huth, Andreas; Rahtz, Dieter; and Schmiechen, Ralph, 4,371,536, Cl. 424-256.000.
A. Schulman, Inc.: *See—*
Nelson, Wayne F., 4,371,583, Cl. 428-358.000.
AB Bonnierforetagen: *See—*
Gustafsson, Berth U., 4,371,324, Cl. 418-201.000.
AB Carbox: *See—*
Adolfsson, Rune; Persson, Gert A.; and Persson, Hans A. H., 4,370,880, Cl. 72-389.000.
AB Strangbetong: *See—*
Bernander, Karl-Gustav; and Skogstrom, Lars, 4,371,031, Cl. 165-54.000.
Abbott Laboratories: *See—*
Choudhury, Hrishikesh; and Zaha, Juergen H., 4,370,992, Cl. 134-100.000.
Plattner, Jacob J.; Pernet, Andre G.; and Fung, Anthony K., 4,371,546, Cl. 424-330.000.
Abdelrahman, Mona; Fuchs, Ralph W.; Holman, James O.; Johnson, Robert G.; and Scott, M. Walter, to Honeywell Inc. Ni-fe thin-film temperature sensor. 4,371,861, Cl. 338-25.000.
Abedor, Allan J.; and Abedor, John L. Token sensing photodetector actuated electronic control and timing device and method of use. 4,371,071, Cl. 194-4.00R.
Abedor, John L.: *See—*
Abedor, Allan J.; and Abedor, John L., 4,371,071, Cl. 194-4.00R.
Aberg, Kjell U.: *See—*
Astero , Ulf J. E.; Dahlberg, Johan A. F.; and Aberg, Kjell U., 4,371,155, Cl. 270-53.000.
Abernathy, William L.; Bertram, Billy B.; Davis, Anthony D.; and Ward, Richard M., to Otis Engineering Corporation; and Exxon Production Research Company. Apparatus and method for injecting fluid into a well. 4,371,038, Cl. 166-380.000.
Abraham, Fayez F., to Tyler Refrigeration Corporation. Removable duct panel for multiband refrigerated display cases. 4,370,866, Cl. 62-256.000.
Abrams, Joseph L.: *See—*
Maynard, Arthur D.; and Abrams, Joseph L., 4,371,779, Cl. 219-328.000.
Acevedo, Francisco, to Commonwealth of Puerto Rico. Alignment game with cross shaped playing field. 4,371,170, Cl. 273-271.000.
ACF Industries, Incorporated: *See—*
Fritzsche, Eldred N.; Josephson, Edgar F.; and Pulcrano, Frank C., 4,371,303, Cl. 414-281.000.
Achelpohl, Fritz; and Decker, Werner, to Windmoller & Holscher. Apparatus for pulling open tube sections to form base squares in the production of cross-bottom sacks. 4,371,367, Cl. 493-256.000.
Achterholt, Rainer. Automatic switching-off arrangement. 4,371,051, Cl. 180-271.000.
Acker, Rolf-Dieter; Koenig, Karl-Heinz; Hamprecht, Gerhard; and Pommer, Ernst-Heinrich, to BASF Aktiengesellschaft. Silyl-benzimidazole-2-carbamic acid esters and their use as fungicides. 4,371,525, Cl. 424-184.000.
Acumeter Laboratories, Inc.: *See—*
McIntyre, Donald B.; and McIntyre, Frederic S., 4,371,571, Cl. 427-285.000.
Adams, Don L.; Fischer, William C.; Wright, Stuart C.; and Verzella, David J., to United Technologies Corporation. Attitude trimmed airspeed/attitude controls. 4,371,936, Cl. 364-434.000.
Adams, Don L.; Fischer, William C.; Wright, Stuart C.; and Verzella, David J., to United Technologies Corporation. Retaining airspeed hold engagement in low speed maneuver. 4,371,937, Cl. 364-434.000.
Adams, Don L.; Fischer, William C.; Wright, Stuart C.; and Verzella, David J., to United Technologies Corporation. Roll attitude inhibit of aircraft coordinated turn disengagement. 4,371,939, Cl. 364-434.000.
Adams, Don L.: *See—*
Wright, Stuart C.; Adams, Don L.; Fischer, William C.; and Verzella, David J., 4,371,938, Cl. 364-434.000.
Adams, John H., to Reuters Limited. Alert message communication system. 4,371,871, Cl. 340-717.000.
Adbar (Patent Co.) Limited: *See—*
Ringham, Stanley A., 4,371,300, Cl. 411-41.000.
Adeka Argus Chemical Co. Ltd.: *See—*
Minagawa, Motonobu; and Nakahara, Yutaka, 4,371,646, Cl. 524-119.000.
Minagawa, Motonobu; Nakahara, Yutaka; and Tobita, Etsuo, 4,371,647, Cl. 524-120.000.
Adolfsson, Rune; Persson, Gert A.; and Persson, Hans A. H., to AB Carbox. Method and apparatus for bending sheet-plate blanks to form shells having cylindrical curvature. 4,370,880, Cl. 72-389.000.
Adriel Energy Corporation: *See—*
Weinberger, Theodore, 4,371,377, Cl. 44-56.000.
Aeromator Trading Co. AB: *See—*
Bernander, Karl-Gustav; and Skogstrom, Lars, 4,371,031, Cl. 165-54.000.
Agarwal, Pawan K.; and Makowski, Henry S., to Exxon Research and Engineering Co. Hot melt adhesive compositions. 4,371,640, Cl. 524-66.000.
Agarwal, Pawan K., to Exxon Research and Engineering Co. Blend compounds of sulfonated polymers and compositions thereof. 4,371,652, Cl. 524-216.000.
Agence Nationale de Valorisation de la Recherche: *See—*
Doyen, Joel; and Raisin, Jean-Pierre, 4,371,159, Cl. 271-228.000.
Agency of Industrial Science and Technology: *See—*
Shimizu, Kazuo, 4,371,729, Cl. 585-453.000.
Takada, Susumu, 4,371,796, Cl. 307-476.000.
Agency of Industrial Science & Technology Ministry of International Trade & Industry: *See—*
Yamamoto, Noboru; and Yamashita, Iwao, 4,371,686, Cl. 528-76.000.
Agfa-Gevaert AG: *See—*
Dietrich, Karl-Heinz; Gruber, Josef; Rauffer, Walter; and Nassl, Peter, 4,371,242, Cl. 353-101.000.
Agfa-Gevaert Aktiengesellschaft: *See—*
von Kempski, Walter; and Kirstein, Fritz, 4,371,196, Cl. 283-7.000.
Agfa-Gevaert, N.V.: *See—*
Van de Sande, Christian C.; Janssens, Wilhelmus; Lassig, Wolfgang; and Meier, Ernst, 4,371,604, Cl. 430-223.000.
Ahne, Hellmut; Kuhn, Eberhard; and Rubner, Roland, to Siemens Aktiengesellschaft. Radiation-reactive precursor stages of highly heat-resistant polymers. 4,371,685, Cl. 528-73.000.
Ahrens, Wilhelm: *See—*
Fock, Jurgen; Schedlitzki, Dietmar; Holtschmidt, Ulrich; and Ahrens, Wilhelm, 4,371,683, Cl. 528-60.000.
Ahrweiler, Karl-Heinz, to Kusters, Eduard. Control system for a continuously operating press. 4,371,414, Cl. 156-361.000.
Aichelmann, Dietmar; Kannenberg, Karl; Schutte, Dieter; and Volling, Axel. Apparatus for the vaporization of aluminum trichloride. 4,371,503, Cl. 422-307.000.
Air Products and Chemicals, Inc.: *See—*
Lovette, Norris G., Jr.; and Ruprecht, David R., 4,370,861, Cl. 62-63.000.
Airhart, Harold, Sr.: *See—*
Willig, Roy L.; LeBlanc, Edward J., III; and Airhart, Harold, Sr., 4,371,044, Cl. 175-4.600.
Aisan Kogyo Kabushiki Kaisha: *See—*
Wada, Satomi, 4,371,478, Cl. 261-44.00C.
Aisin Seiki Company, Limited: *See—*
Iwasaki, Shinichiro, 4,371,272, Cl. 374-184.000.
Aitken, Robert M., to Imperial Chemical Industries Limited. Method and apparatus for the manufacture of fusecord. 4,371,368, Cl. 493-298.000.
Aizawa, Hiroshi: *See—*
Takishima, Yoshiyuki; Uchidoi, Masanori; Mashimo, Yukio; Aizawa, Hiroshi; and Kwan, Stephen C., 4,371,243, Cl. 354-43.000.
Ajinomoto Co., Inc.: *See—*
Anderson, David M.; Herrmann, Klaus M.; and Somerville, Ronald L., 4,371,614, Cl. 435-108.000.
Miwa, Kiyoshi; and Momose, Haruo, 4,371,615, Cl. 435-115.000.
Utagawa, Takashi; Miyoshi, Takeshi; Morisawa, Hirokazu; Yamazaki, Akihiro; Yoshinaga, Fumihiro; and Mitsugi, Koji, 4,371,613, Cl. 435-88.000.
Ajinomoto Co., Ltd.: *See—*
Sato, Minoru; Hirose, Yoshiteru; and Toyoshima, Shigeshi, 4,371,577, Cl. 428-96.000.
Akebono Brake Industry Co., Ltd.: *See—*
Iwata, Yoichi, 4,371,060, Cl. 188-73.380.
Akimoto, Hiroshi; and Kawai, Akiyoshi, to Takeda Chemical Industries, Ltd. 4,5-Deoxymaytansinoids, their use and pharmaceutical compositions thereof. 4,371,533, Cl. 424-248.540.
Akino, Miki: *See—*
Nagatsu, Toshiharu; Kato, Takeshi; Yamaguchi, Tokio; Akino, Miki; Matsuura, Sadao; and Sugimoto, Takashi, 4,371,514, Cl. 424-1.000.
Akita, Sigeyuki: *See—*
Kago, Yoshiyuki; Akita, Sigeyuki; and Fujikawa, Katsuhisa, 4,371,835, Cl. 324-174.000.

Aktiebolaget Bofors: *See—*
Gustavsson, Olle; and Sundmar, Goran, 4,370,915, Cl. 89-47.000.
Akzona Incorporated: *See—*
Mathes, Nikolaus; Pitowski, Hans J.; and Vitzthum, Gunther, 4,371,441, Cl. 210-649.000.
Mathes, Nikolaus; Lange, Wolfgang; and Gerlach, Klaus, 4,371,485, Cl. 264-46.100.
Albrile, Walter, to Ing. C. Olivetti & C., S.p.A. Selector system for a single type carrier in typewriters and similar printing machines. 4,371,275, Cl. 400-161.300.
Alekhin, Stanislav A.; Bakhir, Vitold M.; Born, Raisa I.; and Bakhir, Tatyana M. Method for controlling the dispersing of solids in drilling mud. 4,370,885, Cl. 73-153.000.
Alessio, Lorenzo E.; and Cuneo, Giuseppe, to Black & Decker Inc. Overspeed protective apparatus for a portable tool. 4,371,906, Cl. 361-51.000.
Alexiou, Michael S.; Brittain, Philip I.; and Tyman, John H. P., to Brent Chemicals International Limited. Aromatic compounds and their manufacture. 4,371,694, Cl. 546-100.000.
Alford, Derek; and Wilkinson, Alan, to Coal Industry (Patents) Limited. Mining machine steering equipment. 4,371,209, Cl. 299-1.000.
Alicot, Michel J. C.; and Tignol, Adrien P. N., to P C U K Produits Chimiques Ugine Kuhlmann. Process for the purification of mercaptobenzothiazole. 4,371,698, Cl. 548-177.000.
Alix, Maurice A. J. Tension stop for safety belt of the inertia reel type. 4,371,192, Cl. 280-801.000.
Allcraft Plastic Company, Inc.: *See—*
Heil, John, 4,370,762, Cl. 4-206.000.
Allied Corporation: *See—*
Eibeck, Richard E.; Robinson, Martin A.; Evans, Francis E.; and Recla, Eugene B., 4,371,707, Cl. 568-6.000.
Marshall, Robert M.; and Dardoufas, Kimon C., 4,371,658, Cl. 524-585.000.
Allis-Chalmers Corporation: *See—*
Hansen, Kenneth N., 4,371,048, Cl. 180-69.00R.
Wagner, Robert J., 4,370,829, Cl. 49-388.000.
Alt, Gerhard H.; and Chupp, John P., to Monsanto Company. Process for the in-solvent, in-situ generation of haloalkyl alkyl ethers. 4,371,717, Cl. 568-681.000.
Amano Pharmaceutical Co., Ltd.: *See—*
Yamada, Hideaki; Tani, Yoshiki; and Isobe, Kimiyasu, 4,371,621, Cl. 435-191.000.
American Can Company: *See—*
Sieverin, Walter J., 4,371,837, Cl. 324-225.000.
American Cyanamid Co.: *See—*
Thomas, Daniel W., 4,371,643, Cl. 524-88.000.
American Home Products Corporation: *See—*
McGregor, William H., 4,371,465, Cl. 260-112.50R.
McGregor, William H., 4,371,466, Cl. 260-112.50R.
Stein, Reinhardt P., 4,371,539, Cl. 424-272.000.
Stein, Reinhardt P., 4,371,697, Cl. 548-125.000.
American Industries, Inc.: *See—*
Carlo, Louis D., 4,370,897, Cl. 74-475.000.
American Pneumatics Co.: *See—*
Donzis, Byron A., 4,370,754, Cl. 2-2.000.
American Safety Equipment Corp.: *See—*
Tanaka, Akira, 4,371,128, Cl. 242-107.40A.
AMSTED Industries Incorporated: *See—*
Mulcahy, Harry W., 4,370,933, Cl. 105-197.0DB.
Anagnostopoulos, Constantine N.; and Ranadive, Deepak K., to Eastman Kodak Company. Tapering of oxidized polysilicon electrodes. 4,371,890, Cl. 357-59.000.
Anderson, Burton C.; and Frazer, August H., to Du Pont de Nemours, E. I., and Company. Heat-resistant rigid polymers from difunctional 9,10-dihydro-9,10-ethanoanthracenes. 4,371,690, Cl. 528-190.000.
Anderson, David M.; Herrmann, Klaus M.; and Somerville, Ronald L., to Ajinomoto Co., Inc. *E.Coli* bacteria carrying recombinant plasmids and their use in the fermentative production of L-tryptophan. 4,371,614, Cl. 435-108.000.
Anderson, Kenneth L., to Phillips Petroleum Company. Controlled, elevated pressure dehydration of poly(arylene sulfide) prepolymerization mixture. 4,371,671, Cl. 528-388.000.
Andersson, Hans: *See—*
Bator, Tadeusz, 4,371,917, Cl. 363-21.000.
Ando, Hirohito; and Furukawa, Naoki, to Dainippon Ink and Chemicals Inc. Process for producing isoindolinone pigments. 4,371,467, Cl. 260-165.000.
Ando, Makoto: *See—*
Kikuchi, Toshiro; Ogawa, Masaru; and Ando, Makoto, 4,371,620, Cl. 435-189.000.
Ando, Shizuka; Oyama, Hiroshi; and Yamaguchi, Toshio, to Toto, Ltd. Topical washing device. 4,370,764, Cl. 4-443.000.
Ando, Takayuki: *See—*
Shimogawa, Toshiaki; Ando, Takayuki; and Kuwakado, Satosi, 4,371,127, Cl. 242-107.200.
Ando, Toshinari; Nishi, Masataka; Shimamoto, Susumu; Yoshida, Hiromichi; Suzumura, Takashi; Kakizaki, Kimio; Yamagishi, Ryozo; and Ogata, Hisanao, to Japan Atomic Energy Research Institute; and Hitachi Cable, Ltd. Composite superconductors. 4,371,741, Cl. 174-15.00S.
Andow, Fumio; Kobayashi, Takayuki; Kondow, Ryotaro; and Nii, Yoshiji, to Tokyo Shibaura Denki Kabushiki Kaisha. Digital protective relaying systems. 4,371,908, Cl. 361-83.000.
Andres, Rudolf; and Grantz, Helmut, to Daimler-Benz A.G. Safety belt system. 4,371,125, Cl. 242-107.000.
Andrews, Michael W.; and Hoffmann, Carl J., to Bell Telephone Laboratories, Incorporated. Load distribution among parallel DC-DC converters. 4,371,919, Cl. 363-65.000.
Anglade, Rene. Guardrailing for vehicles. 4,371,056, Cl. 182-127.000.
Annen, Klaus: *See—*
Hofmeister, Helmut; Petzoldt, Karl; Annen, Klaus; Laurent, Henry; Wiechert, Rudolf; and Steinbeck, Hermann, 4,371,529, Cl. 424-243.000.
Anscher, Bernard. Wire bundle clamp. 4,371,137, Cl. 248-73.000.
Anthony, Myron L., to Sax Zzyzx, Ltd. Latent heat recirculating system. 4,371,424, Cl. 202-159.000.
Apollo Molded Products: *See—*
Gelina, Robert P., 4,371,091, Cl. 220-288.000.
Apple Computer, Inc.: *See—*
Muller, Michael, 4,371,760, Cl. 200-5.00A.
Applied Magnetics Corporation: *See—*
Platter, Sanford; and Shelley, Pierre, 4,370,802, Cl. 29-603.000.
Roscamp, Thomas A.; and Gibson, George W., 4,370,801, Cl. 29-603.000.
Aqualume, Incorporated: *See—*
Campagna, Thomas G., 4,371,023, Cl. 152-158.000.
Araki, Kaeko, administratrix: *See—*
Misawa, Yoshihiko; Kabeshita, Akira; Mori, Kazuhiro; Nakagawa, Hiroshi; and Araki, Shigeru, deceased, 4,370,804, Cl. 29-741.000.
Araki, Shigeru, deceased: *See—*
Misawa, Yoshihiko; Kabeshita, Akira; Mori, Kazuhiro; Nakagawa, Hiroshi; and Araki, Shigeru, deceased, 4,370,804, Cl. 29-741.000.
Arata, Tetsuya: *See—*
Murayama, Akira; Harada, Fumio; Arata, Tetsuya; Itagaki, Masato; Nakayama, Susumu; and Sofue, Masahisa, 4,371,319, Cl. 417-312.000.
Arkoudilos, John: *See—*
Siregar, John A.; and Arkoudilos, John, 4,371,558, Cl. 426-332.000.
Armstrong, Donald E.: *See—*
Broadt, David R.; Armstrong, Donald E.; and Kackenmeister, Carl F., 4,371,914, Cl. 362-15.000.
Arnaud, Claude B., to Societe Anonyme Dite: Corneloup S.A. Grape harvester. 4,370,847, Cl. 56-330.000.
Arnaudeau, Marcel, to Institut Francais du Petrole. Transfer terminal for offshore production. 4,371,037, Cl. 166-366.000.
Arnold, Victor. Device for repairing poles for supporting electric power transmission lines and the like. 4,371,018, Cl. 144-4.000.
Arnold, William T., to Brouwer Turf Equipment Limited. Gang mower with single cylinder lifting mechanism. 4,370,846, Cl. 56-6.000.
Aronica, John A., to Kendall Company, The. Belt retainer. 4,370,782, Cl. 24-198.000.
Art Cap Company, Inc.: *See—*
Gallin, Paul G., 4,370,756, Cl. 2-195.000.
Artos Engineering Company: *See—*
Butler, John D., 4,370,786, Cl. 29-33.00M.
Asao, Tomohiro; and Takahashi, Yosuke, to Yanmar Diesel Engine Co., Ltd. Apparatus for starting internal combustion engine. 4,370,954, Cl. 123-182.000.
ASEA Aktiebolag: *See—*
Larsson, Hans G.; and Westman, Erik, 4,371,396, Cl. 419-56.000.
Ashland Food Technology Holdings S.A.: *See—*
Becker, Heinz, 4,371,554, Cl. 426-243.000.
Ashland Oil, Inc.: *See—*
Gardikes, John J.; and Kim, Young D., 4,371,648, Cl. 523-144.000.
Ashton, Larry J.; and Grimes, Ronald R., to Little Giant Industries, Inc. Method of manufacturing a fiberglass ladder. 4,371,055, Cl. 182-46.000.
Assaf, Gad, to Bronicki, Lucien Y., a part interest. Method of and means for lifting water and generating power therefrom. 4,370,859, Cl. 60-641.600.
Assaf, Gad, to Solmat. Method of and means for generating power from a hot brine source. 4,370,860, Cl. 60-641.110.
Assenza, Donello; and Pappalardo, Massimo, to Consiglio Nazionale Delle Ricerche. Method for making ultracoustic transducers of the line curtain or point matrix type. 4,370,785, Cl. 29-25.350.
Astero, Ulf J. E.; Dahlberg, Johan A. F.; and Aberg, Kjell U., to Asthausbolagen HB Astero & Stockhaus. Apparatus for jogging a sheaf of papers. 4,371,155, Cl. 270-53.000.
Asthausbolagen HB Astero & Stockhaus: *See—*
Astero, Ulf J. E.; Dahlberg, Johan A. F.; and Aberg, Kjell U., 4,371,155, Cl. 270-53.000.
Atkins, Robert C. Nipple waterer. 4,370,948, Cl. 119-72.500.
Atlantic Richfield Company: *See—*
Bi, Le-Khac, 4,371,670, Cl. 525-342.000.
Bourland, Larry G., 4,371,666, Cl. 525-207.000.
Lewis, Kathy; and Avery, James E., 4,371,739, Cl. 136-251.000.
Nicholson, Harold L., 4,371,661, Cl. 525-53.000.
Younes, Usama E., 4,371,672, Cl. 525-391.000.
Atlas Powder Company: *See—*
Fillman, Harold T., 4,371,408, Cl. 149-21.000.
Audesse, Emery G.: *See—*
Broadt, David R.; and Audesse, Emery G., 4,371,913, Cl. 362-17.000.
Aurora Industries, Inc.: *See—*
Hentz, Donald A., 4,371,626, Cl. 501-145.000.
Aust, John J.: *See—*
Bower, Thomas E.; and Aust, John J., 4,371,366, Cl. 493-138.000.
Austin, Thomas H., to Texaco Inc. Preparation of a semiflexible energy management polyether polyurethane foam using as a crosslinker-surfactant an ethylene oxide adduct of a Mannich condensate prepared

from the reaction of nonyl phenol, diethanolamine and formaldehyde. 4,371,629, Cl. 521-115.000.
Autelca AG: *See—*
Dubey, Pierre, 4,371,073, Cl. 194-102.000.
Automobiles Citroen S.A.: *See—*
Dore, Jacques P., 4,371,356, Cl. 464-111.000.
Automobiles Peugeot: *See—*
Dore, Jacques P., 4,371,356, Cl. 464-111.000.
Avco Corporation: *See—*
McNair, Robert J., Jr., 4,370,959, Cl. 123-295.000.
Avery, James E.: *See—*
Lewis, Kathy; and Avery, James E., 4,371,739, Cl. 136-251.000.
Awerbuch, Leon; and Rogers, Alfred N., to Bechtel International Corporation. Apparatus and method for energy production and mineral recovery from geothermal and geopressured fluids. 4,370,858, Cl. 60-641.500.
B. F. Goodrich Company, The: *See—*
Kroenke, William J., 4,371,655, Cl. 524-423.000.
Mattson, William F., 4,371,483, Cl. 264-40.600.
Morningstar, Marion G.; and Doyle, Thomas J., 4,371,677, Cl. 526-80.000.
Baba, Nobuyuki: *See—*
Watanabe, Kazutomi; Iwasaki, Sokichi; and Baba, Nobuyuki, 4,370,943, Cl. 118-218.000.
Bader, Ilse: *See—*
Lind, Erwin; and Bader, Ilse, 4,371,599, Cl. 430-49.000.
Badet, Bernard; and Kurzweil, Karel, to Compagnie Internationale pour l'Informatique CII-Honeywell Bull (Societe Anonyme). Substrate for interconnecting electronic integrated circuit components having a repair arrangement enabling modification of connections to a mounted chip device. 4,371,744, Cl. 174-68.500.
Badura, Wolfgang: *See—*
Steinicke, Wolfgang; Badura, Wolfgang; Schiessl, Alois; Weinzierl, Werner; and Krone, Hartmut, 4,370,929, Cl. 102-202.000.
Bagnall, Michael: *See—*
Gordiski, Ronald J.; Bennett, Robert G., Jr.; Parrella, Alfred T.; and Bagnall, Michael, 4,371,941, Cl. 364-475.000.
Bahr, Gunter; Habel, Erich; and Hafner, Werner, to Carl Freudenberg. Firma. Self-locking sealing and wiper ring. 4,371,177, Cl. 277-152.000.
Baise, Arnold I.; Burns, John M.; and Sachdev, Harbans S., to International Business Machines Corporation. Process for adhering an organic resin to a substrate by means of plasma polymerized phosphines. 4,371,565, Cl. 427-41.000.
Baker, Archibald J. S., to Cross Manufacturing Company Limited. Method of lining cylindrical bores. 4,370,788, Cl. 29-156.4WL.
Baker, Basil O., to M-O Valve Company Limited, The. Excess voltage arresters. 4,371,911, Cl. 361-124.000.
Baker Perkins Holdings Limited: *See—*
Steels, Gordon, 4,371,329, Cl. 425-437.000.
Bakhir, Tatyana M.: *See—*
Alekhin, Stanislav A.; Bakhir, Vitold M.; Born, Raisa I.; and Bakhir, Tatyana M., 4,370,885, Cl. 73-153.000.
Bakhir, Vitold M.: *See—*
Alekhin, Stanislav A.; Bakhir, Vitold M.; Born, Raisa I.; and Bakhir, Tatyana M., 4,370,885, Cl. 73-153.000.
Balko, Edward N.; and Moulthrop, Lawrence C., to General Electric Company. Apparatus for reduction of shunt current in bipolar electrochemical cell assemblies. 4,371,433, Cl. 204-228.000.
Ball Corporation: *See—*
Scholes, Addison B., 4,371,387, Cl. 65-118.000.
Balland, Jean, to Manufacture de Produits Chimiques Protex. Chloride oxidation of dyes in vat and sulfur dyed textiles. 4,371,373, Cl. 8-650.000.
Ballard, James W.; and Ballard, Larry R. Methods of constructing a one-piece roof vent device. 4,370,876, Cl. 72-68.000.
Ballard, Larry R.: *See—*
Ballard, James W.; and Ballard, Larry R., 4,370,876, Cl. 72-68.000.
Ballarini, John A.; and Hetland, Timothy A., to Printing Developments, Inc. Electrodeposition of chromium on metal base lithographic sheet. 4,371,430, Cl. 204-32.00R.
Bally Manufacturing Corporation: *See—*
Halliburton, Ronald D., 4,371,164, Cl. 273-121.00A.
Balogh, George F., to Goodyear Tire & Rubber Company, The. Purification of hydrocarbons by treatment with polyamines. 4,371,733, Cl. 585-860.000.
Bals, Hans G. Two-wheeled vehicle. 4,371,185, Cl. 280-227.000.
Bals, Hans G., to Uranerzbergbau GmbH & Co. KG. Method for obtaining dissolved suspended or chemically bound substances from a liquid. 4,371,442, Cl. 210-661.000.
Ban, Hiromichi: *See—*
Takeuchi, Osamu; Kokubun, Haruo; Yoshinaga, Hisashi; Hara, Shuichi; and Ban, Hiromichi, 4,371,149, Cl. 266-90.000.
Baranowski, Leonard J.: *See—*
Lee, Richard J.; and Baranowski, Leonard J., 4,371,712, Cl. 568-430.000.
Baratoff, Paul, to Korfund Dynamics Corporation. Vibration isolation system with adjustable constant force, all-directional, attenuating seismic restraint. 4,371,141, Cl. 248-569.000.
Bard, William B.; and Walters, John O., to Phillips Petroleum Company. Control of a fluid catalytic cracking unit. 4,371,499, Cl. 422-111.000.
Barendregt, Willem, to Internationale Verpakking Maatschappij BV. Container closure. 4,371,089, Cl. 215-256.000.
Barkalow, Richard H.: *See—*
Goebel, Joseph A.; Barkalow, Richard H.; and Ulion, Nicholas E., 4,371,570, Cl. 427-248.100.
Barlow, George J.; Stanley, Philip E.; and Brown, Richard P., to Honeywell Information Systems Inc. Interface for controlling information transfers between main data processing systems units and a central subsystem. 4,371,928, Cl. 364-200.000.
Barmag Barmer Maschinenfabrik AG: *See—*
Bauer, Karl; Schippers, Heinz; and Dammann, Peter, 4,370,853, Cl. 57-340.000.
Lohest, Hans, 4,371,823, Cl. 318-705.000.
Oberstrass, Detley, 4,370,851, Cl. 57-340.000.
Oberstrass, Detley; Hartig, Wolfgang; and Weber, Klaus, 4,370,852, Cl. 57-340.000.
Barnes, Derek; Churchland, Mark T.; Herndier, Arnold W.; Schilling, Walter W.; and Welsh, James K., to MacMillan Bloedel Limited. Three-step process for preparation of long wood strands. 4,371,020, Cl. 144-366.000.
Barnes, Stuart R., to International Standard Electric Corporation. Injection mold for coaxial cable jointing. 4,371,145, Cl. 249-80.000.
Barraclough, Bruce L.: *See—*
McGuire, Patrick L.; and Barraclough, Bruce L., 4,371,045, Cl. 175-17.000.
Barta, Istvan: *See—*
Jarai, Miklos; Piukovich, Sandor; Istvan, Sandor; Gado, Istvan; Szell, Valeria; and Barta, Istvan, 4,371,622, Cl. 435-253.000.
Bartels-Keith, James R.; and Karger, Eva R., to Polaroid Corporation. Amino hydroxy cyclohexenone developing agents. 4,371,603, Cl. 430-218.000.
Barthel, Walter: *See—*
Muller, Karl-Hans; and Barthel, Walter, 4,371,400, Cl. 106-273.00R.
Bartusel, Karl R.: *See—*
Siemens, Walter; Ulrich, Gunther; and Bartusel, Karl R., 4,371,103, Cl. 225-1.000.
BASF Aktiengesellschaft: *See—*
Acker, Rolf-Dieter; Koenig, Karl-Heinz; Hamprecht, Gerhard; and Pommer, Ernst-Heinrich, 4,371,525, Cl. 424-184.000.
Distler, Dieter; Wolf, Hans; and Welzel, Gerhard, 4,371,636, Cl. 523-223.000.
Druschke, Wolfgang; Kerckow, Albrecht; and Stanger, Bernd, 4,371,659, Cl. 524-599.000.
Hoene, Richard, 4,371,676, Cl. 526-76.000.
Hoffman, Dietrich; and Sliwka, Wolfgang, 4,371,634, Cl. 523-208.000.
Scherer, Hans; Lotsch, Wolfgang; and Bock, Gustav, 4,371,735, Cl. 544-300.000.
Seybold, Guenther, 4,371,734, Cl. 544-300.000.
BASF Farben & Fasern AG: *See—*
Moller, Dieter; and Poth, Ulrich, 4,371,667, Cl. 525-208.000.
BASF Wyandotte Corporation: *See—*
Newkirk, David D.; Login, Robert B.; and Thir, Basil, 4,371,476, Cl. 260-709.000.
Bassetti S.p.A.: *See—*
Carreras Fontcuberta, Francisco, 4,370,939, Cl. 112-262.200.
Bator, Tadeusz, to Wladimiroff, Wladimir; and Andersson, Hans. Voltage conversion method. 4,371,917, Cl. 363-21.000.
Bauer, Karl; Schippers, Heinz; and Dammann, Peter, to Barmag Barmer Maschinenfabrik AG. Friction false twisting apparatus. 4,370,853, Cl. 57-340.000.
Baumann, Gunther: *See—*
Wahl, Josef; Schmidt, Peter-Jurgen; Birmelin, Jorg; Grob, Ferdinand; Kohler, Rolf; Zabler, Erich; Heintz, Frieder; Bremer, Wolfgang; Kopernick, Viktor; Hugel, Robert; Weigl, Andreas; and Baumann, Gunther, 4,371,934, Cl. 364-424.000.
Baumann, Hans D. Flexible and backlash free rotary stem coupling. 4,371,355, Cl. 464-101.000.
Baxter, Duane W.; Evjen, Joseph L., Jr.; Hoveland, William C.; Roble, Roy A.; Smith, Donald R.; and Wirz, John H., to International Business Machines Corporation. Disk initialization method. 4,371,902, Cl. 360-75.000.
Baxter, Warren N.; Merckling, Nicholas G., deceased; by Masukawa, Noelle K., administratrix; Robinson, Ivan M.; and Stamatoff, Gelu S., to Du Pont de Nemours, E. I., and Company. Polymer composition. 4,371,680, Cl. 526-159.000.
Bayer Aktiengesellschaft: *See—*
Friedhofen, Gerhard; Serini, Volker; Neumann, Rainer; Freitag, Dieter; and Schwarz, Hans-Helmut, 4,371,691, Cl. 528-196.000.
Konig, Klaus; Illger, Hans-Walter; Seifert, Peter; and Meyborg, Holger, 4,371,630, Cl. 521-173.000.
Kramer, Wolfgang; and Elbe, Hans-Ludwig, 4,371,708, Cl. 568-31.000.
Kranz, Eckart, 4,371,700, Cl. 548-262.000.
Quiring, Bernd; Niederdellmann, Georg; Goyert, Wilhelm; and Wagner, Hans, 4,371,684, Cl. 528-65.000.
Bazell, Seymour; and Goldberg, Edward M. Medical fluid collection device. 4,370,987, Cl. 128-760.000.
BBC Brown, Boveri & Company Limited: *See—*
Huser, Guido, 4,371,766, Cl. 200-148.00A.
Mercier, Olivier, 4,371,791, Cl. 307-141.000.
Ragaller, Klaus, 4,371,765, Cl. 200-147.00R.
Beaty, Ronald L.: *See—*
Mitrovich, Svetislav; and Beaty, Ronald L., 4,371,276, Cl. 400-625.000.
Bechtel International Corporation: *See—*
Awerbuch, Leon; and Rogers, Alfred N., 4,370,858, Cl. 60-641.500.

Beck, Gerhard; Knolle, Jochen; Rupp, Richard H.; and Scholkens, Bernward, to Hoechst Aktiengesellschaft. Hetero-imino-prostacyclins. 4,371,542, Cl. 424-274.000.

Becker, Floyd W.; and Regimbal, Richard R., to Drill Systems, Inc. Multi-purpose mobile drill rig. 4,371,041, Cl. 173-28.000.

Becker, Heinz, to Ashland Food Technology Holdings S.A. Method of making skinless sausage using reusable porous polytetrafluoroethylene casing. 4,371,554, Cl. 426-243.000.

Becker, Heinz: *See—*
Grunert, Hans C.; and Becker, Heinz, 4,371,223, Cl. 312-325.000.

Beckett, Ardell. Waste heat recovery system. 4,370,949, Cl. 122-20.00B.

Beckschulte, Heinrich; and Schluter, Wilhelm, to Gebruder Lodige Maschinenbau Gesellschaft mit beschrankter Haftung. Method for gluing of particles containing chips, fibers and similar ligno-cellulose-containing particles and apparatus for this purpose of gluing the same. 4,370,945, Cl. 118-303.000.

Beery, Jack, to Xerox Corporation. Programmed brake for controlling the speed of a scanning carriage. 4,371,254, Cl. 355-8.000.

Behar, Abraham. Connection between two bodies. 4,371,285, Cl. 403-339.000.

Beilfuss, Wolfgang: *See—*
Munzenmaier, Wolfgang; Eggensperger, Heinz; Ehlers, Helmut H.; Beilfuss, Wolfgang; Bucklers, Lothar; and Harke, Hans-Peter, 4,371,547, Cl. 424-333.000.

Bell, Robert P.: *See—*
Sibley, Clifton B.; and Bell, Robert P., 4,371,502, Cl. 422-249.000.

Bell Telephone Laboratories, Incorporated: *See—*
Andrews, Michael W.; and Hoffmann, Carl J., 4,371,919, Cl. 363-65.000.
Brolin, Stephen J., 4,371,755, Cl. 179-35.000.
Chen, I-Heng; and Liss, Warren A., 4,371,789, Cl. 307-38.000.
Fang, San-Chin; and Fraser, Donald L., Jr., 4,371,843, Cl. 330-253.000.
Hartman, Adrian R.; MacRae, Alfred U.; and Shackle, Peter W., 4,371,886, Cl. 357-38.000.
Hartman, Adrian R.; Riley, Terence J.; and Shackle, Peter W., 4,371,887, Cl. 357-38.000.
Ulrich, Werner, 4,371,758, Cl. 179-175.20C.

Bellet, Jean-Marie, to Bioself International Inc. Electronic thermometer. 4,371,271, Cl. 374-183.000.

Belton, Betty R. Apparatus for batiking eggs and the like. 4,370,941, Cl. 118-13.000.

Benai, Tommaso; Leoncini, Novello; and Paoletti, Ugo, to Snia Viscosa Societa' Nazionale Industria Applicazioni Viscosa S.p.A. Process for the continuous spinning of viscose rayon. 4,371,491, Cl. 264-196.000.

Benattar, Robert; and Cronenberger, Michel, to SODIP. Fluid treatment apparatus, a casing for enclosing and compressing a stack of flat elements therein, and a process for making such an apparatus. 4,371,438, Cl. 210-232.000.

Bendix Corporation, The: *See—*
Lorraine, Jack R., 4,371,322, Cl. 418-47.000.

Benkmann, Christian, to Linde Aktiengesellschaft. Pressure swing adsorption process. 4,371,380, Cl. 55-26.000.

Bennet, Joseph C.: *See—*
Funcik, Jack F.; Bennet, Joseph C.; Tubbs, Joseph T.; and Schneider, Thomas E., 4,370,806, Cl. 29-749.000.

Bennett, Robert A.: *See—*
Henriques, Joseph; and Bennett, Robert A., 4,370,920, Cl. 99-339.000.

Bennett, Robert G., Jr.: *See—*
Gordiski, Ronald J.; Bennett, Robert G., Jr.; Parrella, Alfred T.; and Bagnall, Michael, 4,371,941, Cl. 364-475.000.

Benson, Melvin E.: *See—*
McCaskey, Harold O.; and Benson, Melvin E., 4,371,579, Cl. 428-204.000.

Bentzen, Craig L.; Nguyen Mong, Lan; and Niesor, Eric, to Symphar S.A. Therapeutic process with diphosphonate compounds. 4,371,527, Cl. 424-204.000.

Berge, Charles T.: *See—*
Mack, Mark P.; and Berge, Charles T., 4,371,455, Cl. 252-429.00C.

Berger, Martin M. Vending machine with convertible shelves. 4,371,093, Cl. 221-90.000.

Bergvall, Bengt A., to Husqvarna Aktiebolag. Electronic sewing machine with stitch control dependent on sewing material. 4,370,938, Cl. 112-158.00E.

Bernander, Karl-Gustav; and Skogstrom, Lars, to Aeromator Trading Co. AB; and AB Strangbetong. Arrangement for air conditioning control in buildings. 4,371,031, Cl. 165-54.000.

Bernelin, Daniel; and Meyer, Jacques, to Rhone-Poulenc Industries. Binder compositions for powder coatings from mixed saturated resins. 4,371,638, Cl. 523-427.000.

Berstein, Garri; and Riedel, Walter, to Wilhelm Hegenscheidt Gesellschaft mbH. Cutting tool for internal and external turning operations. 4,371,296, Cl. 407-115.000.

Bertram, Billy B.: *See—*
Abernathy, William L.; Bertram, Billy B.; Davis, Anthony D.; and Ward, Richard M., 4,371,038, Cl. 166-380.000.

Besedin, Ivan A.: *See—*
Mitin, Leonid A.; Mitrofanov, Vladislav V.; Fadeev, Vladimir Y.; Fadeev, Petr Y.; Korobkov, Vladlen V.; Kulagin, Rim A.; Vorozheikin, Anatoly A.; Ermilov, Nikolai P.; Smirnov, Jury V.; and Besedin, Ivan A., 4,370,916, Cl. 91-173.000.

Best, Michael J. A.: *See—*
Morrill, Charles D.; and Best, Michael J. A., 4,371,005, Cl. 138-89.000.

Betts, Joseph E.; and Holub, Fred F., to General Electric Company. Method of improving the electrical properties of polymeric insulations containing polar additives, and the improved polymeric insulation product thereof. 4,371,653, Cl. 524-268.000.

Bezard, Jean-Jacques; and Delevallee, Bernard A., to Jaeger. Device for measuring the frequency of an electrical current representative of a variable quantity. 4,371,834, Cl. 324-167.000.

Bezzub, Grigory I.: *See—*
Kopysky, Boris D.; Dmitriev, Viktor D.; Khaustov, Georgy I.; Brodsky, Viktor M.; Surzhikov, Vitaly A.; Semenov, Evgeny I.; Chus, Vladimir G.; Misjulya, Viktor A.; Kandyba, Leonid F.; Ivanov, Igor P.; Bezzub, Grigory I.; Goldenberg, Yasha F.; Zonnenberg, Ilya S.; Paly, Alexandr G.; and Malkin, Arkady S., 4,370,879, Cl. 72-377.000.

Bi, Le-Khac, to Atlantic Richfield Company. Copolymers having a backbone of alternating polymer blocks and silicon units. 4,371,670, Cl. 525-342.000.

Biard, James R.; and Elmer, Ben R., to Spectronics, Inc. Data transmission link. 4,371,847, Cl. 330-307.000.

Bicknell, Thomas J.: *See—*
Constantinides, Nicholas J.; and Bicknell, Thomas J., 4,371,946, Cl. 364-822.000.

Bien, Alfred A.; and Heidt, Frederick W., to Multifastener Corporation. Clinch nut and method of installing same. 4,370,794, Cl. 29-509.000.

Bienert, Herbert; Hanselmann, Dieter; Kohler, Alfred; and Prohaska, Hans, to ITT Industries, Inc. Windshield wiper assembly. 4,370,774, Cl. 15-250.200.

Biferno, Michael A., to McDonnell Douglas Corporation. Fail transparent LCD display with backup. 4,371,870, Cl. 340-716.000.

Bignell, Allan M., to Westinghouse Canada Inc. Protective relay apparatus and methods for protecting electrical power transmission lines. 4,371,907, Cl. 361-82.000.

Billet, Rene, to VALEO Societe Anonyme. Clutch release bearings. 4,371,068, Cl. 192-98.000.

Bintig, Werner; and Christgau, Hermann, to Siemens Aktiengesellschaft. Luminescent screen with grid structure for X-ray image intensifier. 4,371,806, Cl. 313-101.000.

Bioself International Inc.: *See—*
Bellet, Jean-Marie, 4,371,271, Cl. 374-183.000.

Birmelin, Jorg: *See—*
Wahl, Josef; Schmidt, Peter-Jurgen; Birmelin, Jorg; Grob, Ferdinand; Kohler, Rolf; Zabler, Erich; Heintz, Frieder; Bremer, Wolfgang; Kopernick, Viktor; Hugel, Robert; Weigl, Andreas; and Baumann, Gunther, 4,371,934, Cl. 364-424.000.

Bis, Richard F.: *See—*
Morris, Hayden; and Bis, Richard F., 4,371,882, Cl. 357-4.000.

Bisbee, Charles B.; and Yost, Richard J., to Combustion Engineering, Inc. Insulation anchor. 4,370,840, Cl. 52-410.000.

Bither, Tom A., Jr., to Du Pont de Nemours, E. I., and Company. Vapor phase oxidation of n-butane to maleic anhydride. 4,371,702, Cl. 549-260.000.

Black & Decker Inc.: *See—*
Alessio, Lorenzo E.; and Cuneo, Giuseppe, 4,371,906, Cl. 361-51.000.
Braithwaite, John D.; King, Derrick O.; and Williams, Sidney J., 4,370,997, Cl. 137-116.300.

Blakeway Marviroll Pools Pty. Ltd.: *See—*
Blakeway, Stanley R., 4,370,839, Cl. 52-169.700.

Blakeway, Stanley R., to Blakeway Marviroll Pools Pty. Ltd. Pool construction. 4,370,839, Cl. 52-169.700.

Blanchard, Clarence E., to Outboard Marine Corporation. Mounting for marine propulsion device located aft of boat transom. 4,371,348, Cl. 440-52.000.

Blier, Daniel, to 100426 Canada Ltee. Telescopic scaffold. 4,371,057, Cl. 182-184.000.

Bloch, Christopher D.: *See—*
Goldberg, Jerome; and Bloch, Christopher D., 4,371,191, Cl. 280-707.000.

Bloom, Richard L., to United States of America, Navy. Chaff dipole elements and method of packaging. 4,371,874, Cl. 343-18.00B.

Bocassi, Joseph V.: *See—*
Zarrelli, Neal; Bocassi, Joseph V.; and Miller, Robert S., 4,370,969, Cl. 123-525.000.

Bock, Gustav: *See—*
Scherer, Hans; Lotsch, Wolfgang; and Bock, Gustav, 4,371;735, Cl. 544-300.000.

Bodenseewerk Perkin-Elmer & Co., GmbH: *See—*
Tamm, Rolf G. A., 4,371,262, Cl. 356-312.000.
Witte, Wolfgang W. F., 4,371,263, Cl. 356-333.000.

Boehme, George R.: *See—*
Karr, Lawrence J.; Wasserman, Gary L.; and Boehme, George R., 4,371,945, Cl. 364-561.000.

Boeing Company, The: *See—*
Hamilton, William H., 4,370,831, Cl. 49-477.000.

Boeke, Wouter M., to U.S. Philips Corporation. Differential load circuit equipped with field-effect transistors. 4,371,844, Cl. 330-253.000.

Boesten, Wilhelmus H. J.; and Schiepers, Lambertus A. C., to Stamicarbon, B.V. Dipeptide sweetener. 4,371,464, Cl. 260-112.50R.

Bogetti, Lorenzo: *See—*
Tornatore, Giovanni; and Bogetti, Lorenzo, 4,371,828, Cl. 322-32.000.

Bohg, Armin; and Hartmann, Kurt, to International Business Machines Corporation. Electromagnetically operable ram actuator in particular for impact printers. 4,371,857, Cl. 335-259.000.

Bohman, Nils-Erik. T-Shaped sealing ring with elongated lip. 4,371,179, Cl. 277-207.00A.

Bolanos, Anthony R. Space heating stove with stress relieving walls. 4,370,973, Cl. 126-58.000.

Bolen, Ralph A., to Sawyer, John. Connecting rod with variable length. 4,370,901, Cl. 74-586.000.

Borca, Bruno; and Ruscelli, Emilio, to Industrie Pirelli S.p.A. Fluid impermeable liner for a cavity in the earth. 4,371,288, Cl. 405-53.000.

Borg-Warner Corporation: *See—*
Kim, Tong S.; and Lee, Yong N., 4,370,868, Cl. 62-504.000.

Bork, Klaus; and Rueckerl, Alfred, to Siemens Aktiengesellschaft. Pivotable ink-repelling screen for the writing head of an ink recording device. 4,371,881, Cl. 346-140.00R.

Born, Raisa I.: *See—*
Alekhin, Stanislav A.; Bakhir, Vitold M.; Born, Raisa I.; and Bakhir, Tatyana M., 4,370,885, Cl. 73-153.000.

Boschulte, Rainer; Koehnecke, Heinrich; and Muecke, Siegfried, to Siemens Aktiengesellschaft. Monitoring device for distinguishing the operating state of a load. 4,371,831, Cl. 323-284.000.

Boswell, Bennie J.: *See—*
Schaaf, Wayne J.; and Boswell, Bennie J., 4,371,039, Cl. 172-244.000.

Bottemiller, Donald L.; and Miles, John K., to Homecrest Industries Incorporated. Rocking chair. 4,371,142, Cl. 248-573.000.

Bourland, Larry G., to Atlantic Richfield Company. Compatible blends of chlorinated polyvinyl chloride resins and styrene-maleic anhydride resins. 4,371,666, Cl. 525-207.000.

Bower, Thomas E.; and Aust, John J., to Owens-Illinois, Inc. Method for making a produce tray. 4,371,366, Cl. 493-138.000.

Boyer, Gerard A. M.; Duvdevani, Ilan; and Muller, Jean-Marie A., to Exxon Research and Engineering Co. Bitumen-containing extended compositions. 4,371,641, Cl. 524-70.000.

Bradshaw, Jack E. Delimbing apparatus. 4,371,016, Cl. 144-2.00Z.

Braestrup, Claus T.; Nielsen, Mogens C.; Christensen, Joergen A.; Engelstoft, Mogens; Schou, Henning; Eder, Ulrich; Neef, Gunter; Huth, Andreas; Rahtz, Dieter; and Schmiechen, Ralph, to A/S Ferrosan; and Scherling AG. β-Carbolin-3-carboxylic acid derivatives. 4,371,536, Cl. 424-256.000.

Braithwaite, John D.; King, Derrick O.; and Williams, Sidney J., to Black & Decker Inc. Pressure regulator and safety valve assembly. 4,370,997, Cl. 137-116.300.

Brancaleone, Salvatore T., to International Telephone and Telegraph Corporation. Filter connector and method of assembly thereof. 4,371,226, Cl. 339-147.00R.

Brander, James E., to International Combusion Australia Limited. Vibrating linear motor for electromagnetic feeders and similar machines. 4,371,800, Cl. 310-15.000.

Brandt, Warren J., to Jenkins, O. C. Anti-theft device for motor vehicles. 4,371,052, Cl. 180-287.000.

Brann, John J.; Freer, Charles S., Jr.; and Jensen, Warren W., to International Business Machines Corporation. Multiprocessor system with high density memory set architecture including partitionable cache store interface to shared disk drive memory. 4,371,929, Cl. 364-200.000.

Bredeweg, Roger L., to Leco Corporation. Sample loading mechanism. 4,371,971, Cl. 373-115.000.

Breitwisch, Ronald L.: *See—*
King, Dennis D.; Breitwisch, Ronald L.; and Nickum, James D., 4,371,981, Cl. 455-219.000.

Bremer, Wolfgang: *See—*
Wahl, Josef; Schmidt, Peter-Jurgen; Birmelin, Jorg; Grob, Ferdinand; Kohler, Rolf; Zabler, Erich; Heintz, Frieder; Bremer, Wolfgang; Kopernick, Viktor; Hugel, Robert; Weigl, Andreas; and Baumann, Gunther, 4,371,934, Cl. 364-424.000.

Brennan, Michael J., to Ex-Cell-O Corporation. Universal joint. 4,371,359, Cl. 464-136.000.

Brent, Albert; Marion, Charles P.; Richter, George N.; Crouch, William B.; Child, Edward T.; and Reynolds, Blake, to Texaco Inc. Swirl burner for partial oxidation process. 4,371,378, Cl. 48-86.00R.

Brent, Albert; Marion, Charles P.; Richter, George N.; Crouch, William B.; Child, Edward T.; and Reynolds, Blake, to Texaco Inc. Partial oxidation process using a swirl burner. 4,371,379, Cl. 48-197.00R.

Brent Chemicals International Limited: *See—*
Alexiou, Michael S.; Brittain, Philip I.; and Tyman, John H. P., 4,371,694, Cl. 546-100.000.

Bresenham, Jack E.; Grice, Donald G.; and Pi, Shing-Chou, to International Business Machines Corporation. Bi-directional display of circular arcs. 4,371,933, Cl. 364-300.000.

Bridgestone Tire Company Limited: *See—*
Honda, Toshio; Fukuura, Yukio; Ishikawa, Hikaru; Kojima, Shozo; Tanuma, Itsuo; and Ogawa, Masao, 4,371,411, Cl. 156-281.000.

Briner, Emil; and Novak, Peter, to Rieter Machine Works, Ltd. Roving frame and a method of packaging roving. 4,370,850, Cl. 57-96.000.

Bringer, Jacques: *See—*
Grodsky, Gerold M.; and Bringer, Jacques, 4,371,523, Cl. 424-178.000.

Brister, Beryle D., to Brister Incorporated. Apparatus and method for freezing a slug of liquid in a section of a large diameter fluid transmission line. 4,370,862, Cl. 62-66.000.

Brister Incorporated: *See—*
Brister, Beryle D., 4,370,862, Cl. 62-66.000.

British-American Tobacco Company Limited: *See—*
Krywiczanin, Wladyslaw H.; and Lumsden, William, 4,371,418, Cl. 156-497.000.

British Gas Corporation: *See—*
Wright, David M., 4,370,895, Cl. 74-216.000.

British Industrial Plastics Limited: *See—*
Ogden, Dennis H., 4,371,486, Cl. 264-46.600.

Brittain, Philip I.: *See—*
Alexiou, Michael S.; Brittain, Philip I.; and Tyman, John H. P., 4,371,694, Cl. 546-100.000.

Broadt, David R.; and Audesse, Emery G., to GTE Products Corporation. Reflector lamp module for photoflash array. 4,371,913, Cl. 362-17.000.

Broadt, David R.; Armstrong, Donald E.; and Kackenmeister, Carl F., to GTE Products Corporation. Photoflash unit with circuit board radiation switches for selective pairing of lamps. 4,371,914, Cl. 362-15.000.

Broadt, David R.; and Kackenmeister, Carl F., to GTE Products Corporation. Photoflash unit with reflector recesses for circuit board switches. 4,371,915, Cl. 362-15.000.

Brodsky, Viktor M.: *See—*
Kopysky, Boris D.; Dmitriev, Viktor D.; Khaustov, Georgy I.; Brodsky, Viktor M.; Surzhikov, Vitaly A.; Semenov, Evgeny I.; Chus, Vladimir G.; Misjulya, Viktor A.; Kandyba, Leonid F.; Ivanov, Igor P.; Bezzub, Grigory I.; Goldenberg, Yasha F.; Zonnenberg, Ilya S.; Paly, Alexandr G.; and Malkin, Arkady S., 4,370,879, Cl. 72-377.000.

Brolin, Stephen J., to Bell Telephone Laboratories, Incorporated. Bridge lifter circuit. 4,371,755, Cl. 179-35.000.

Bronicki, Lucien Y.: *See—*
Assaf, Gad, 4,370,859, Cl. 60-641.600.

Brooke, Raymond, to Pertec Computer Corporation. Flexible magnetic disk system. 4,371,904, Cl. 360-77.000.

Brother Kogyo Kabushiki Kaisha: *See—*
Hirose, Noboru, 4,371,297, Cl. 408-130.000.

Brouwer, Frans. Optical pattern tracing system with remotely controlled kerf and forward offsets. 4,371,782, Cl. 250-202.000.

Brouwer Turf Equipment Limited: *See—*
Arnold, William T., 4,370,846, Cl. 56-6.000.

Brown, Derek. Fuel rate control for internal combustion engines. 4,370,961, Cl. 123-352.000.

Brown, J. Martin: *See—*
Lee, William W.; Brown, J. Martin; Martinez, Abelardo P.; and Cory, Michael J., 4,371,540, Cl. 424-273.00R.

Brown, Peter W., to Lucas Industries Limited. Vehicle suspension system. 4,371,182, Cl. 280-6.00H.

Brown, Richard P.: *See—*
Barlow, George J.; Stanley, Philip E.; and Brown, Richard P., 4,371,928, Cl. 364-200.000.

Brown Stove Works, Inc.: *See—*
Runion, Cleaston L., 4,371,764, Cl. 200-61.860.

Brownlee, Michael: *See—*
Cerami, Anthony; Brownlee, Michael; and Vlassara, Helen, 4,371,374, Cl. 23-230.00B.

Brucher, Egon. Self-lubricating plain bearing. 4,371,220, Cl. 384-371.000.

Brunswick Corporation: *See—*
Gifford, Richard L.; and Councilman, Richard R., 4,371,124, Cl. 242-84.51A.

Bube, Carsten; Dull, Ernst H.; Thiele, Gerd; and Zeller, Hans, to Robert Bosch GmbH. Safety device for electric consumers in motor vehicles. 4,371,910, Cl. 361-106.000.

Bucklers, Lothar: *See—*
Munzenmaier, Wolfgang; Eggensperger, Heinz; Ehlers, Helmut H.; Beilfuss, Wolfgang; Bucklers, Lothar; and Harke, Hans-Peter, 4,371,547, Cl. 424-333.000.

Budd Company, The: *See—*
Reidenbach, Robert B., 4,370,795, Cl. 29-559.000.

Budich, Wolfgang: *See—*
Schaefer, Hans; and Budich, Wolfgang, 4,370,830, Cl. 49-413.000.

Bulova Watch Co., Inc.: *See—*
Sutter, Hans-Rudolf, 4,371,269, Cl. 368-205.000.

Bunyard, Alan D. Piston-rack rotary actuator. 4,370,917, Cl. 91-491.000.

Burgbacher, Martin; Harmsen, Siegfried; and Papst, Georg, to Papst-Motoren K.G. Miniature diagonal blower with axial flow inlet and radial flow outlet. 4,371,313, Cl. 415-215.000.

Burnham, Robert D.: *See—*
Scifres, Donald R.; Streifer, William; and Burnham, Robert D., 4,371,966, Cl. 372-45.000.

Burniski, Edward W. Automatic self-leveling instrument mount. 4,370,813, Cl. 33-291.000.

Burns, John M.: *See—*
Baise, Arnold I.; Burns, John M.; and Sachdev, Harbans S., 4,371,565, Cl. 427-41.000.

Burroughs Corporation: *See—*
Catiller, Robert D.; and Forbes, Brian K., 4,371,931, Cl. 364-200.000.
Chadra, David P., 4,371,948, Cl. 364-900.000.
Chadra, David P., 4,371,950, Cl. 364-900.000.
Chu, Ke-Chiang; and Sharp, Richard S., 4,371,949, Cl. 364-900.000.
Kim, Dongsung R., 4,371,930, Cl. 364-200.000.

Bush, Elmer W. Apparatus for removing contaminants from crankcase emissions. 4,370,971, Cl. 123-573.000.

Bush, Harry D.: *See—*
Medernach, John W.; Novak, Ivan A.; and Bush, Harry D., 4,371,598, Cl. 430-22.000.

Bush, Herbert A., Jr.: *See—*
Oxenreider, Terry R.; and Bush, Herbert A., Jr., 4,371,591, Cl. 429-88.000.

Butler, John D., to Artos Engineering Company. Wire lead forming machine. 4,370,786, Cl. 29-33.00M.

Buttner, Horace J. Heat transfer system. 4,371,032, Cl. 165-91.000.

Byleveld, Eduard, to Himsley Engineering Limited. Ammoniacal elution of copper from ion exchange resins. 4,371,506, Cl. 423-24.000.
Cain, Darryl F.; and Ehrecke, Kevin L., to Deere & Company. Trailer frame. 4,371,299, Cl. 410-44.000.
Cairns, John F., to Imperial Chemical Industries Limited. Production of porous diaphragm for electrolytic cell. 4,371,564, Cl. 427-35.000.
Calundann, Gordon W.; and East, Anthony J., to Celanese Corporation. Anisotropic melt phase forming poly(ester-carbonate) derived from 6-hydroxy-2-napthoic acid, aromatic diol, organic compound capable of forming a carbonate linkage, and, optionally, other aromatic hydroxy-acid and carbocyclic dicarboxylic acid. 4,371,660, Cl. 524-601.000.
Camp, Carey A., to Western Electric Company, Inc. Methods of straightening backplane-supported pins. 4,371,013, Cl. 140-147.000.
Campagna, Thomas G., to Aqualume, Incorporated. Tubeless tire with insert for preventing collapse in the event of loss of air pressure. 4,371,023, Cl. 152-158.000.
Campbell, Willis R.; Freimuth, John H.; Diederich, Anthony F., Jr.; and Jennings, Richard E., to Sperry Corporation. Baling machine with tapered bale chamber. 4,370,848, Cl. 56-341.000.
Camras, Marvin, to IIT Research Institute. Video disc transducer system and method. 4,371,894, Cl. 358-342.000.
Canada, Her Majesty the Queen in right of, as represented by the Minister of National Defence: *See—*
 Sandoz, Oscar A.; and Mar, John, 4,371,957, Cl. 367-3.000.
Cane, Alessandro, to Zanasi Nigris S.p.A. Apparatus for dosing and dispensing a predetermined volume of powdered material. 4,371,014, Cl. 141-91.000.
Cane, Alessandro; and Farneti, Arrigo, to Zanasi Nigris S.p.A. Filtering screen for use in apparatus for the dosing of powdered material. 4,371,101, Cl. 222-636.000.
Canevari, Cesare; and Signorini, Aldo, to Societa' Pneumatici Pirelli S.p.A. Reinforcing annular structure of radial tires. 4,371,025, Cl. 152-352.00R.
Canon Kabushiki Kaisha: *See—*
 Fujikawa, Kenji, 4,371,241, Cl. 352-140.000.
 Ohara, Tsunemasa; and Yamamichi, Masayoshi, 4,371,594, Cl. 429-97.000.
 Shimizu, Ichiro; Komine, Yoshio; and Masunaga, Makoto, 4,371,240, Cl. 352-140.000.
 Suwa, Kaname, 4,371,595, Cl. 429-98.000.
 Takishima, Yoshiyuki; Uchidoi, Masanori; Mashimo, Yukio; Aizawa, Hiroshi; and Kwan, Stephen C., 4,371,243, Cl. 354-43.000.
 Tsuji, Sadahiko, 4,371,261, Cl. 356-1.000.
 Yoshimura, Shigeru; and Shimizu, Katsuichi, 4,371,256, Cl. 355-14.0SH.
Cante, Charles J.: *See—*
 Friedman, Herman H.; Giacone, Joseph; Cante, Charles J.; and Frost, John R., 4,371,562, Cl. 426-656.000.
Capri-Codec SA: *See—*
 de Vienne, Robert, 4,371,172, Cl. 277-12.000.
Carberry, Richard A.; Druke, Michael B.; and Gusowski, Ronald I., to Data General Corporation. Data processing system having unique bus control operation. 4,371,925, Cl. 364-200.000.
Carduck, Franz-Josef: *See—*
 Christophliemk, Peter; Wust, Willi; and Carduck, Franz-Josef, 4,371,510, Cl. 423-329.000.
Caribbean Properties Limited: *See—*
 Rose, Leon I., 4,371,382, Cl. 55-92.000.
Carl Freudenberg, Firma: *See—*
 Bahr, Gunter; Habel, Erich; and Hafner, Werner, 4,371,177, Cl. 277-152.000.
Carlo, Louis D., to American Industries, Inc. Dual mode shifter for automatic transmissions. 4,370,897, Cl. 74-475.000.
Carpenter Technology Corporation: *See—*
 Henthorne, Michael; Yinger, Robert J.; and DeBold, Terry A., 4,371,394, Cl. 75-128.00A.
Carpenter, William T., Jr. Well tool for detecting well bore deviation in drill string. 4,370,814, Cl. 33-307.000.
Carr, Peter: *See—*
 Chi, Michael C.; and Carr, Peter, 4,371,825, Cl. 320-5.000.
Carreras Fontcuberta, Francisco, to Bassetti S.p.A. Method and mechanism for inserting an elastic band in selected areas of mattress-wrapping bedclothes. 4,370,939, Cl. 112-262.200.
Carrieri, Louis F., to Gulf & Western Manufacturing Company. Workpiece ejector system for presses. 4,370,878, Cl. 72-345.000.
Carter, Max E., Sr.: *See—*
 Jenkins, John M., III; Carter, Max E., Sr.; Green, Michael L.; and Cavender, Marvin E., 4,371,977, Cl. 378-51.000.
Cartier International B.V.: *See—*
 Saujet, Claude, 4,371,087, Cl. 215-12.00R.
Cartmell, James V., to NDM Corporation. X-Ray transparent medical electrode. 4,370,984, Cl. 128-640.000.
Cartwright, Richard V.; and Lees, Ronald D., to Hercules Incorporated. Gelatinized high explosive composition and method of preparation. 4,371,409, Cl. 149-94.000.
Case, Edward M.; and Hopper, Chester S., to Marlo Company Incorporated, The. Gasket material. 4,371,180, Cl. 277-230.000.
Case, Manson D., to Sonoco Products Company. Yarn tube with universal pickup groove. 4,371,130, Cl. 242-125.100.
Caspar, John A.: *See—*
 Schindel, Arnold; and Caspar, John A., 4,371,803, Cl. 310-242.000.
Cassel, David E.: *See—*
 Henry, John W., IV; and Cassel, David E., 4,371,310, Cl. 415-211.000.
Caterpillar Tractor Co.: *See—*
 Kaveney, John R., Jr., 4,371,205, Cl. 292-48.000.
 Pickering, William; and Urbanc, David J., 4,370,891, Cl. 73-861.030.
 Stevens, Samuel B., 4,371,410, Cl. 156-117.000.
Catiller, Robert D.; and Forbes, Brian K., to Burroughs Corporation. Linear micro-sequencer for micro-processor system utilizing specialized instruction format. 4,371,931, Cl. 364-200.000.
Cavazza, Claudio, to Sigma-Tau Industrie Farmaceutiche Riunite S.p.A. Process for enzymatically producing L-carnitine. 4,371,618, Cl. 435-128.000.
Cavender, Marvin E.: *See—*
 Jenkins, John M., III; Carter, Max E., Sr.; Green, Michael L.; and Cavender, Marvin E., 4,371,977, Cl. 378-51.000.
Cebulla, Dietrich: *See—*
 Sedlacek, Franz; Oertle, Jakob; and Cebulla, Dietrich, 4,371,115, Cl. 239-524.000.
Celanese Corporation: *See—*
 Calundann, Gordon W.; and East, Anthony J., 4,371,660, Cl. 524-601.000.
 Turnbull, John, 4,370,784, Cl. 28-166.000.
Centrum Konstrukcyjno-Technologiczne Maszyn Gorniczych "Komag": *See—*
 Karowiec, Krzysztof; Sedlaczek, Janusz; Mura, Alojzy; Pawelczyk, Jerzy; and Skrzypiec, Zbigniew, 4,371,477, Cl. 261-30.000.
Cerami, Anthony; Brownlee, Michael; and Vlassara, Helen, to Rockefeller University, The. Monitoring metabolic control in diabetic patients by measuring glycosylated amino acids and peptides in urine. 4,371,374, Cl. 23-230.00B.
Ceshkovsky, Ludwig; and Dakin, Wayne R., to Discovision Associates. Time base error correction system for player. 4,371,899, Cl. 358-315.000.
Chabrier, Gilbert, to Spie-Batignolles. Pipeline for conveying hot or cold fluids. 4,371,197, Cl. 285-47.000.
Chadra, David P., to Burroughs Corporation. Train printer-data link processor. 4,371,948, Cl. 364-900.000.
Chadra, David P., to Burroughs Corporation. Peripheral control interface circuit for train printer-data link processor. 4,371,950, Cl. 364-900.000.
Chalmers, Walter M. Electric connector. 4,371,228, Cl. 339-221.00R.
Chamard, Alex; Dougier, Patrick; and Monteil, Jean-Bruno, to Rhone-Poulenc Industries. High coercivity, cobalt-doped ferrimagnetic iron oxide particulates. 4,371,567, Cl. 427-130.000.
Champion International Corporation: *See—*
 Korte, Ralph J., 4,371,104, Cl. 225-48.000.
Champion Spark Plug Europe, S.A.: *See—*
 van den Berg, Johan H.; and Le Sausse, Robert T., 4,370,775, Cl. 15-250.320.
Chan, Keng S.: *See—*
 Webb, Thomas H.; Vest, Hugh F.; and Chan, Keng S., 4,371,447, Cl. 252-73.000.
Chang, Chin-An: *See—*
 Esaki, Leo; and Chang, Chin-An, 4,371,884, Cl. 357-12.000.
Chang, David C., to Du Pont de Nemours, E. I., and Company. Crater resistant acrylic enamel. 4,371,657, Cl. 524-512.000.
Chang, Jaw-Kang: *See—*
 Pert, Candace B.; and Chang, Jaw-Kang, 4,371,463, Cl. 260-112.50E.
Chapman, Robert M. Method of and stand for disassembling structures such as radiators. 4,371,106, Cl. 228-19.000.
Charles Beseler Company: *See—*
 Howitt, George L., 4,371,259, Cl. 355-38.000.
Chauvin, Yves; Commereuc, Dominique; and Sugier, Andre, to Institut Francais du Petrole. Process for the catalytic synthesis of methane by reacting hydrogen with carbon monoxide. 4,371,627, Cl. 518-700.000.
Chemokomplex Vegyipari Gepes Berendezes Export Import Vallalat: *See—*
 Weiperth, Vilmos; and Lezsak, Tibor, 4,371,114, Cl. 239-309.000.
Chemopetrol, koncernovy podnik, Chemicke zavody ceskoslovenskosovetskeho pratelstvi: *See—*
 Kadlec, Vlastimil; Grosser, Vojtech; and Rosenthal, Jakub, 4,371,456, Cl. 252-435.000.
Chen, I-Heng; and Liss, Warren A., to Bell Telephone Laboratories, Incorporated. Power control arrangement. 4,371,789, Cl. 307-38.000.
Cheng, Paul J., to Phillips Petroleum Company. Decreasing carbon black reactor fouling rate. 4,371,511, Cl. 423-456.000.
Cheron, Christian: *See—*
 Queveau, Gerard; and Cheron, Christian, 4,371,186, Cl. 280-432.000.
Cherry Electrical Products Corporation: *See—*
 Clark, John T., Jr., 4,371,759, Cl. 200-5.00R.
Cherukuri, Subraman R.; Friello, Dominick R.; Parker, Ellery; Hopkins, Walter; and Mackay, Donald A. M., to Nabisco Brands, Inc. Stable liquid red beet color and chewing gum containing same. 4,371,549, Cl. 426-3.000.
Chi, Michael C.; and Carr, Peter, to Energy Development Associates, Inc. Method of minimizing the effects of parasitic currents. 4,371,825, Cl. 320-5.000.
Chicklis, Evan P.; and Mosto, James R., to Sanders Associates, Inc. Low cost laser. 4,371,969, Cl. 372-77.000.
Chiddix, Max E., to GAF Corporation. Process of producing a distilled tanediol product of high quality in high yield. 4,371,723, Cl. 568-861.000.

Child, Edward T.: *See—*
 Brent, Albert; Marion, Charles P.; Richter, George N.; Crouch, William B.; Child, Edward T.; and Reynolds, Blake, 4,371,378, Cl. 48-86.00R.
 Brent, Albert; Marion, Charles P.; Richter, George N.; Crouch, William B.; Child, Edward T.; and Reynolds, Blake, 4,371,379, Cl. 48-197.00R.
CHINOIN Gyogyszer es Vegyeszeti Termekek Gyara R.T.: *See—*
 Jarai, Miklos; Piukovich, Sandor; Istvan, Sandor; Gado, Istvan; Szell, Valeria; and Barta, Istvan, 4,371,622, Cl. 435-253.000.
Chiu, Te-Long: *See—*
 Lien, Jih-Chang; and Chiu, Te-Long, 4,370,798, Cl. 29-576.00B.
Choudhury, Hrishikesh; and Zaha, Juergen H., to Abbott Laboratories. Washing apparatus for small parts. 4,370,992, Cl. 134-100.000.
Christensen, Joergen A.: *See—*
 Braestrup, Claus T.; Nielsen, Mogens C.; Christensen, Joergen A.; Engelstoft, Mogens; Schou, Henning; Eder, Ulrich; Neef, Gunter; Huth, Andreas; Rahtz, Dieter; and Schmiechen, Ralph, 4,371,536, Cl. 424-256.000.
Christgau, Hermann: *See—*
 Bintig, Werner; and Christgau, Hermann, 4,371,806, Cl. 313-101.000.
Christopher, Donald S.: *See—*
 Stock, Arthur J.; and Christopher, Donald S., 4,371,201, Cl. 292-251.000.
Christophliemk, Peter; Wust, Willi; and Carduck, Franz-Josef, to Henkel Kommanditgesellschaft Auf Aktien; and Degussa Aktiengesellschaft (Henkel KGaA). Process for the continuous crystallization of zeolitic sodium aluminosilicates of smallest particle size. 4,371,510, Cl. 423-329.000.
Chromalloy American Corporation: *See—*
 Schaaf, Wayne J.; and Boswell, Bennie J., 4,371,039, Cl. 172-244.000.
Chu, Albert E., to E-Y Laboratories, Inc. Method for forming an isolated lectin-immunological conjugate. 4,371,515, Cl. 436-544.000.
Chu, Chin-Chiun, to Mobil Oil Corporation. Zeolites modified with group VA metals. 4,371,457, Cl. 252-437.000.
Chu, Ke-Chiang; and Sharp, Richard S., to Burroughs Corporation. Time-shared, multi-phase memory accessing system having automatically updatable error logging means. 4,371,949, Cl. 364-900.000.
Chupp, John P.: *See—*
 Alt, Gerhard H.; and Chupp, John P., 4,371,717, Cl. 568-681.000.
Churchland, Mark T.: *See—*
 Barnes, Derek; Churchland, Mark T.; Herndier, Arnold W.; Schilling, Walter W.; and Welsh, James K., 4,371,020, Cl. 144-366.000.
Chus, Vladimir G.: *See—*
 Kopysky, Boris D.; Dmitriev, Viktor D.; Khaustov, Georgy I.; Brodsky, Viktor M.; Surzhikov, Vitaly A.; Semenov, Evgeny I.; Chus, Vladimir G.; Misjulya, Viktor A.; Kandyba, Leonid F.; Ivanov, Igor P.; Bezzub, Grigory I.; Goldenberg, Yasha F.; Zonnenberg, Ilya S.; Paly, Alexandr G.; and Malkin, Arkady S., 4,370,879, Cl. 72-377.000.
Ciba-Geigy Corporation: *See—*
 Topfl, Rosemarie, 4,371,637, Cl. 523-416.000.
 Zahir, Abdul-Cader; and Wyler, Siegfried, 4,371,719, Cl. 568-723.000.
Ciccarelli, Roger N., to Xerox Corporation. Positively charged developer compositions containing telomeric amines. 4,371,601, Cl. 430-110.000.
Cicognani, Mario; Tangorra, Giorgio; and Cimatti, Gianfranco, to Industrie Pirelli S.p.A. Toothed belt. 4,371,363, Cl. 474-205.000.
Cimatti, Gianfranco: *See—*
 Cicognani, Mario; Tangorra, Giorgio; and Cimatti, Gianfranco, 4,371,363, Cl. 474-205.000.
Ciments Lafarge France: *See—*
 Grapin, Jean P.; Gauthier, Gilbert; and Deltruc, Francis, 4,371,120, Cl. 241-284.000.
Cincinnati, Milacron Inc.: *See—*
 Damikolas, Gerasimos, 4,371,942, Cl. 364-475.000.
Citarella, William P.: *See—*
 Pitchon, Esra; Schara, Robert E.; Citarella, William P.; Giacone, Joseph; and Zobel, Frederick A., 4,371,556, Cl. 426-311.000.
Citizen Watch Company Limited: *See—*
 Enomoto, Tadao; and Kasai, Hidefumi, 4,371,429, Cl. 204-4.000.
Citterio, Camillo. Composite modular element structure for furnishings. 4,371,221, Cl. 312-199.000.
Clark, John T., Jr., to Cherry Electrical Products Corporation. Encoding switch. 4,371,759, Cl. 200-5.00R.
Clark, Peter D., to Sunsearch, Inc. Adjustable mounting rack for solar collectors. 4,371,139, Cl. 248-237.000.
Clarke, Eugene L., to Petrolite Corporation. Degasser-dehydrator. 4,371,434, Cl. 204-302.000.
Clarke, John A.: *See—*
 Gammon, Michael W.; and Clarke, John A., 4,371,151, Cl. 266-186.000.
Claussen, Robert L.: *See—*
 Silverman, Gary S.; Zera, Robert D.; Kubiatowicz, James F.; and Claussen, Robert L., 4,371,171, Cl. 273-357.000.
Clay, Roger D., to Phillips Petroleum Company. Product loading arm storage keeper. 4,371,136, Cl. 248-49.000.
Claycomb, Jack R. Drilling orientation tool. 4,371,958, Cl. 367-85.000.
Clem, Katherine V., to Eastman Kodak Company. Conductive elements for photovoltaic cells. 4,371,740, Cl. 136-256.000.
Clesid S.A.: *See—*
 Guilpain, Bernard; and Tinchant, Xavier, 4,371,970, Cl. 373-74.000.
Coal Industry (Patents) Limited: *See—*
 Alford, Derek; and Wilkinson, Alan, 4,371,209, Cl. 299-1.000.
 Gavin, Derek G., 4,371,727, Cl. 585-14.000.
Cobe Laboratories, Inc.: *See—*
 Johnson, Steven H., 4,371,385, Cl. 55-190.000.
Coetsier, Paul; and Ravarotto, Robert, to Etablissements M. Muller & Cie. Method of measuring the power output of an automative vehicle engine on a roller testing bench. 4,370,883, Cl. 73-117.000.
Cohen, Howard G.: *See—*
 Herzig, Ralph B.; and Cohen, Howard G., 4,370,769, Cl. 5-452.000.
Cohn, Seymour B.; Karp, Arthur; and Stone, David S., to Varian Associates, Inc. Broadband high-power microwave window assembly. 4,371,854, Cl. 333-252.000.
Collington, Eric W.; Hallet, Peter; Wallis, Christopher J.; and Hayes, Norman F., to Glaxo Group Limited. Aminocyclopentanone amides and pharmaceutical formulation. 4,371,530, Cl. 424-244.000.
Colpo Company, Ltd.: *See—*
 Imaizumi, Hiroo, 4,371,340, Cl. 433-74.000.
Columbus Show Case Company, The: *See—*
 Vermillion, Eugene F., 4,370,838, Cl. 52-36.000.
Combes, Marvin G., to Grove Valve and Regulator Company. Orifice meter with replacable orifice disc. 4,370,893, Cl. 73-861.610.
Combustion Engineering, Inc.: *See—*
 Bisbee, Charles B.; and Yost, Richard J., 4,370,840, Cl. 52-410.000.
Commercial Resins Company: *See—*
 Hart, Robert J., 4,371,295, Cl. 406-128.000.
Commereuc, Dominique: *See—*
 Chauvin, Yves; Commereuc, Dominique; and Sugier, Andre, 4,371,627, Cl. 518-700.000.
Commonwealth of Puerto Rico: *See—*
 Acevedo, Francisco, 4,371,170, Cl. 273-271.000.
 Fraser, Alberto, 4,370,767, Cl. 5-417.000.
Compagnie Internationale pour l'Informatique CII-Honeywell Bull (Societe Anonyme): *See—*
 Badet, Bernard; and Kurzweil, Karel, 4,371,744, Cl. 174-68.500.
Compton, A. Berkeley. Imaginary multi-level ticktacktoe. 4,371,169, Cl. 273-271.000.
Computer & Communications Technology Corporation: *See—*
 Valstyn, Erich P.; and Kelley, G. Vinson, 4,371,905, Cl. 360-112.000.
Conoco, Inc.: *See—*
 Mack, Mark P.; and Berge, Charles T., 4,371,455, Cl. 252-429.00C.
Consiglio Nazionale Delle Ricerche: *See—*
 Assenza, Donello; and Pappalardo, Massimo, 4,370,785, Cl. 29-25.350.
Constantinides, Nicholas J.; and Bicknell, Thomas J., to United States of America, National Aeronautics and Space Administration. Servomechanism for doppler shift compensation in optical correlator for synthetic aperture radar. 4,371,946, Cl. 364-822.000.
Container Corporation of America: *See—*
 Tanner, Donald M.; and Potts, Herbert M., 4,371,109, Cl. 229-28.00R.
Contour Fabricators, Inc.: *See—*
 Wanchik, Joseph; and Gabriele, Joseph M., 4,370,976, Cl. 128-77.000.
Control Data Corporation: *See—*
 Kort, Raymond C.; and Kelley, James W., 4,371,951, Cl. 364-900.000.
Controlled Environment Systems, Inc.: *See—*
 Widmayer, Don F., 4,371,812, Cl. 315-291.000.
Converse, Gregg A.; and Converse, Maurice. Box top opener. 4,371,021, Cl. 145-21.000.
Converse, Maurice: *See—*
 Converse, Gregg A.; and Converse, Maurice, 4,371,021, Cl. 145-21.000.
Copeland, Louis E.: *See—*
 Morrill, Charles D.; Des Lierres, John M.; and Copeland, Louis E., 4,371,291, Cl. 405-169.000.
Cornelius Cannon, Inc.: *See—*
 Fredrickson, Howard J., 4,371,085, Cl. 211-149.000.
Cornet, Jean, to Thomson-CSF. Reversible memory structure with thermo-optical writing and optical reading and process for writing and erasing said structure. 4,371,954, Cl. 365-126.000.
Coronet-Metallwarenfabrik GmbH: *See—*
 Sturm, Bernd, 4,371,282, Cl. 403-277.000.
Corth, Richard, to Westinghouse Electric Corp. Plant growth type fluorescent lamp. 4,371,810, Cl. 313-487.000.
Cory, Michael J.: *See—*
 Lee, William W.; Brown, J. Martin; Martinez, Abelardo P.; and Cory, Michael J., 4,371,540, Cl. 424-273.00R.
Costakis, Evan E.: *See—*
 Tsatsas, Georges; Costakis, Evan E.; and Foscolos, Georges V., 4,371,538, Cl. 424-267.000.
Coulter, Howard W.: *See—*
 Triggs, Dennis R.; and Coulter, Howard W., 4,370,811, Cl. 33-32.00R.
Councilman, Richard R.: *See—*
 Gifford, Richard L.; and Councilman, Richard R., 4,371,124, Cl. 242-84.51A.
Courtois, Christian: *See—*
 Doussot, Michel; and Courtois, Christian, 4,371,877, Cl. 343-770.000.
Couturier, Alain: *See—*
 Paris, Philippe Y. J.; and Couturier, Alain, 4,371,343, Cl. 434-29.000.

Cowan, Dwaine O.: *See—*
Potember, Richard S.; Poehler, Theodore O., Jr.; and Cowan, Dwaine O., 4,371,883, Cl. 357-8.000.
CRC Wireline, Inc.: *See—*
Willig, Roy L.; LeBlanc, Edward J., III; and Airhart, Harold, Sr., 4,371,044, Cl. 175-4.600.
Cremer, Heinz P.: *See—*
Engels, Bernd; Heise, Friedrich; and Cremer, Heinz P., 4,371,065, Cl. 192-8.00C.
Crick, David W.: *See—*
Jackman, Peter R.; and Crick, David W., 4,371,763, Cl. 200-61.45R.
Crinos Industria Farmabiologica S.p.A.: *See—*
Gazzani, Giovanni, 4,371,518, Cl. 424-78.000.
Cronenberger, Michel: *See—*
Benattar, Robert; and Cronenberger, Michel, 4,371,438, Cl. 210-232.000.
Cross Manufacturing Company Limited: *See—*
Baker, Archibald J. S., 4,370,788, Cl. 29-156.4WL.
Crouch, William B.: *See—*
Brent, Albert; Marion, Charles P.; Richter, George N.; Crouch, William B.; Child, Edward T.; and Reynolds, Blake, 4,371,378, Cl. 48-86.00R.
Brent, Albert; Marion, Charles P.; Richter, George N.; Crouch, William B.; Child, Edward T.; and Reynolds, Blake, 4,371,379, Cl. 48-197.00R.
Crumby, John T. Combination poncho and cushion. 4,370,755, Cl. 2-88.000.
Cryoplants Limited: *See—*
Schuftan, Paul M., deceased, 4,371,381, Cl. 55-27.000.
CTS Corporation: *See—*
Hunt, Roger W.; Miller, Brian T.; and Schroeder, Donald R., 4,371,078, Cl. 206-329.000.
Cuisinarts, Inc.: *See—*
Sontheimer, Carl G.; and Podell, Allen F., 4,371,118, Cl. 241-30.000.
Cuneo, Giuseppe: *See—*
Alessio, Lorenzo E.; and Cuneo, Giuseppe, 4,371,906, Cl. 361-51.000.
Cushman, Glenn F., to Northrop Corporation. Inertial instrument with a temporally digitized rebalance network. 4,371,921, Cl. 364-138.000.
Custom Concepts Incorporated: *See—*
Silverman, Gary S.; Zera, Robert D.; Kubiatowicz, James F.; and Claussen, Robert L., 4,371,171, Cl. 273-357.000.
Czumak, Frank M.; and Fichter, Peter K., to Polaroid Corporation. Film processing kit. 4,371,249, Cl. 354-304.000.
Dage, Richard C.: *See—*
Grisar, J. Martin; Schnettler, Richard A.; and Dage, Richard C., 4,371,737, Cl. 544-370.000.
Dages, Daniel, to Saint-Gobain Vitrage. Plasticizers for polyvinyl butyral. 4,371,586, Cl. 428-437.000.
Dahlberg, Johan A. F.: *See—*
Astero , Ulf J. E.; Dahlberg, Johan A. F.; and Aberg, Kjell U., 4,371,155, Cl. 270-53.000.
Dai Nippon Insatsu Kabushiki Kaisha: *See—*
Mitsuhashi, Yuji, 4,371,265, Cl. 356-432.000.
Daido Tokishuko Kabushiki Kaisha: *See—*
Hasegawa, Kazumasa; Ito, Minao; Sugiura, Saburo; Yamano, Kiyoichi; and Hayakawa, Shizunori, 4,371,392, Cl. 75-10.00R.
Daiichi Radioisotope Laboratories, Ltd.: *See—*
Nagatsu, Toshiharu; Kato, Takeshi; Yamaguchi, Tokio; Akino, Miki; Matsuura, Sadao; and Sugimoto, Takashi, 4,371,514, Cl. 424-1.000.
Daimler-Benz A.G.: *See—*
Andres, Rudolf; and Grantz, Helmut, 4,371,125, Cl. 242-107.000.
Grossner, Horst; Kaminski, Detlef; and Schwerdt, Paul, 4,370,965, Cl. 123-426.000.
Tank, Eggert, 4,371,312, Cl. 415-200.000.
Dainippon Ink and Chemicals Inc.: *See—*
Ando, Hirohito; and Furukawa, Naoki, 4,371,467, Cl. 260-165.000.
Dainippon Screen Manufacturing Co., Ltd.: *See—*
Wakabayashi, Masayoshi; and Taniguchi, Matsuyoshi, 4,371,250, Cl. 354-325.000.
Dainippon Screen Seizo Kabushiki Kaisha: *See—*
Yoshimoto, Takeshi; Hiraoka, Hideki; Okazaki, Seiji; Taniguchi, Yoshihiro; and Harada, Tsutomu, 4,371,260, Cl. 355-77.000.
Daitoku, Koichi; Sekine, Kenji; Matsukawa, Nobuo; and Sugimori, Shiro, to Nippon Kogaku K.K. Apparatus for controlling film advancement in a camera. 4,371,244, Cl. 354-173.000.
Dakin, Wayne R.: *See—*
Ceshkovsky, Ludwig; and Dakin, Wayne R., 4,371,899, Cl. 358-315.000.
D'Amico, John J., to Monsanto Company. 3-Substituted aminoalkyl-2-benzothiazolinones as plant growth regulants. 4,371,388, Cl. 71-90.000.
Damikolas, Gerasimos, to Cincinnati, Milacron Inc. Method and apparatus for controlling an automatic set-up cycle of operation. 4,371,942, Cl. 364-475.000.
Dammann, Peter: *See—*
Bauer, Karl; Schippers, Heinz; and Dammann, Peter, 4,370,853, Cl. 57-340.000.
Danguillier, Wilhelm; Grams, Wolfgang; and Tietze, Jurgen, to Dr. C. Otto & Comp. G.m.b.H. Shaft-like dry cooler for coke. 4,371,425, Cl. 202-228.000.
Dardoufas, Kimon C.: *See—*
Marshall, Robert M.; and Dardoufas, Kimon C., 4,371,658, Cl. 524-585.000.
D'Artois, Christian: *See—*
Desaleux, Jean; and D'Artois, Christian, 4,370,993, Cl. 135-19.500.
Das, Amitabha, to Ionomet Company. Resist system having increased light response. 4,371,608, Cl. 430-315.000.
Data General Corporation: *See—*
Carberry, Richard A.; Druke, Michael B.; and Gusowski, Ronald I., 4,371,925, Cl. 364-200.000.
Dauel, Darold R.; Kiesling, Clarence R.; and May, Jerry L., to Henderson & Sturm. Air jet helicopter rotor hub and air distribution system. 4,371,314, Cl. 416-20.00A.
Davidson, James D. Shutter shields (R), auto-mated thermal shutters for glass areas. 4,370,826, Cl. 49-63.000.
Davidson, Roderick I., to Fibun B.V. Fence or wall incorporating fibre-optic wave-guide. 4,371,869, Cl. 340-557.000.
Davis, Anthony D.: *See—*
Abernathy, William L.; Bertram, Billy B.; Davis, Anthony D.; and Ward, Richard M., 4,371,038, Cl. 166-380.000.
Davis, Jefferson W., Jr., to United States of America, Energy. Synthesis of alpha-amino acids. 4,371,705, Cl. 562-444.000.
Davis, Wendell: *See—*
Frias, Robert; Minnis, C. W.; Hawkins, A. Hubert; and Davis, Wendell, 4,371,302, Cl. 414-22.000.
Day, Pierce B.; and Marsiglio, Carl M., to Eastman Kodak Company. Color electrophotographic copier. 4,371,253, Cl. 355-4.000.
Dayton-Walther Corporation: *See—*
Walther, William D., 4,371,213, Cl. 301-12.00R.
DCA Food Industries: *See—*
Hochhauser, Arthur; and Jackson, Richard B., 4,371,560, Cl. 426-643.000.
De, Bimal B.; Gierut, Lawrence G.; Krakau, Herbert B.; Naik, Kirit; and Tan-Atichat, Eddie, to Rockwell International Corporation. Automatic fault recovery system for a multiple processor telecommunications switching control. 4,371,754, Cl. 179 18.0EE.
DeAlto, Michael E.; DiGiacomo, Joseph D.; Marritt, Clifford R.; and Preston, Edward G., to Molins Limited. Cutting head for filter assembler. 4,370,908, Cl. 83-348.000.
DeBold, Terry A.: *See—*
Henthorne, Michael; Yinger, Robert J.; and DeBold, Terry A., 4,371,394, Cl. 75-128.00A.
Debortoli, George; Meyerstein, Michael V.; and Velsher, Benne, to Northern Telecom Limited. Enclosure for outdoor cross-connect system for telecommunications. 4,371,757, Cl. 179-98.000.
de Broqueville, Axel. Transportation system utilizing a stretchable train of cars and stretchable bandconveyors. 4,370,931, Cl. 104-20.000.
Decker, Earl L., to General Motors Corporation. Hinged pull-down fuse block assembly. 4,371,743, Cl. 174-52.00R.
Decker, Werner: *See—*
Achelpohl, Fritz; and Decker, Werner, 4,371,367, Cl. 493-256.000.
Decorzant, Rene: *See—*
Naf, Ferdinand; Decorzant, Rene; and Schulte-Elte, Karl H., 4,371,460, Cl. 252-522.00R.
Deere & Company: *See—*
Cain, Darryl F.; and Ehrecke, Kevin L., 4,371,299, Cl. 410-44.000.
Troemner, James O.; Wetrich, Peter D.; and Volz, William A., 4,371,063, Cl. 192-4.00A.
Degn, Kaj; and Waldstrom, Ejvind, to O. G. Hoyer A/S. Packaging apparatus. 4,370,844, Cl. 53-546.000.
Degussa Aktiengesellschaft: *See—*
Muller, Karl-Hans; and Barthel, Walter, 4,371,400, Cl. 106-273.00R.
Degussa Aktiengesellschaft (Henkel KGaA): *See—*
Christophliemk, Peter; Wust, Willi; and Carduck, Franz-Josef, 4,371,510, Cl. 423-329.000.
Delevallee, Bernard A.: *See—*
Bezard, Jean-Jacques; and Delevallee, Bernard A., 4,371,834, Cl. 324-167.000.
Deltruc, Francis: *See—*
Grapin, Jean P.; Gauthier, Gilbert; and Deltruc, Francis, 4,371,120, Cl. 241-284.000.
De Martino, Ennio, to IAO Industrie Riunite S.p.A. Motor-vehicle lamp with base area illumination. 4,371,916, Cl. 362-31.000.
Dembicks, Andrew E., to Southern Case, Inc. Container for chain saws. 4,371,079, Cl. 206-349.000.
Dennis, Silas P., Jr.; and Dennis, Tony M. Apparatus and process for drying sawdust. 4,371,375, Cl. 44-2.000.
Dennis, Tony M.: *See—*
Dennis, Silas P., Jr.; and Dennis, Tony M., 4,371,375, Cl. 44-2.000.
Denny, Jon P. M. Tufting machines. 4,370,937, Cl. 112-79.00A.
Denzin, Horst, to Francotyp GmbH. Subassembly combination for mail processing machines. 4,371,416, Cl. 156-441.500.
Depery, Jean: *See—*
Laesser, Claude; Zafferri, Roberto; and Depery, Jean, 4,371,821, Cl. 318-696.000.
Desaleux, Jean; and D'Artois, Christian, to Desaleux, Jean. Disposable umbrella. 4,370,993, Cl. 135-19.500.
Des Lierres, John M.: *See—*
Morrill, Charles D.; Des Lierres, John M.; and Copeland, Louis E., 4,371,291, Cl. 405-169.000.
DeSoto, Inc.: *See—*
Mylonakis, Stamatios G.; and Tortorello, Anthony J., 4,371,669, Cl. 526-311.000.
de Soyres, Bruno; and Nouvel, Jacques, to Rhone-Poulenc Industries. Hydrocarbon stock solutions of Cr^{+6} compounds storage-stabilized by a soluble partial ester of a phosphoric acid. 4,371,471, Cl. 260-438.50R.

DeTar, George F., Jr.: *See—*
Schaefer, Marcus J.; and DeTar, George F., Jr., 4,371,924, Cl. 364-200.000.
Deutsche Forschungs- und Versuchsanstalt fur Luft- und Raumfahrt e.V.: *See—*
Lindner, Friedrich; and Scheunemann, Kurt, 4,371,029, Cl. 165-10.000.
DeVecchi, Francisco, to Veco International, Inc. Filter housing. 4,371,386, Cl. 55-338.000.
de Vienne, Robert, to Capri-Codec SA. Anchoring and sealing coupling for a cable. 4,371,172, Cl. 277-12.000.
Deville, Christian; and Lafuma, Philippe, to Thomson-CSF. Variable pitch delay line for travelling-wave tube and travelling-wave tube equipped with such a line. 4,371,852, Cl. 333-157.000.
De Wolf, Frank T.; and Kimberlin, Dan W., to General Electric Company. Permanent magnet field pole for a direct current dynamoelectric machine. 4,371,799, Cl. 310-154.000.
Diamond International Corporation: *See—*
O'Neill, Richard K., 4,371,097, Cl. 222-321.000.
Diamond, John A., to Vapor Corporation. Contactless pressure sensitive switch. 4,371,762, Cl. 200-61.430.
Di Battista, Piero; and Gratani, Francesco, to Montedison S.p.A. Stabilizers for polymers and polymers stabilized thereby. 4,371,695, Cl. 546-190.000.
DiBiano, Robert J.; and Hobbs, James W., to Phillips Petroleum Company. Control of a fractional distillation process. 4,371,426, Cl. 203-2.000.
Dick, Perry J., Jr., to Norwood Minerals, Inc. Consolidation of slurries of solid particulate materials. 4,371,376, Cl. 44-10.00R.
Diederich, Anthony F., Jr.: *See—*
Campbell, Willis R.; Freimuth, John H.; Diederich, Anthony F., Jr.; and Jennings, Richard E., 4,370,848, Cl. 56-341.000.
Diepers, Heinrich; and Sachs, Bertram, to Siemens Aktiengesellschaft. Ultrasonic transducer arrangement and method for fabricating same. 4,371,805, Cl. 310-334.000.
Dietrich, Karl-Heinz; Gruber, Josef; Rauffer, Walter; and Nassl, Peter, to Agfa-Gevaert AG. Objective lens exchanging arrangement in a microfilm reader. 4,371,242, Cl. 353-101.000.
DiGiacomo, Joseph D.: *See—*
DeAlto, Michael E.; DiGiacomo, Joseph D.; Marritt, Clifford R.; and Preston, Edward G., 4,370,908, Cl. 83-348.000.
Dijkmans, Eise C.; and Immink, Kornelis A., to U.S. Philips Corporation. Device for artificial reverberation. 4,371,748, Cl. 179-1.00J.
Dijkmans, Eise C.: *See—*
Van de Grift, Robert E. J.; Van de Plassche, Rudy J.; and Dijkmans, Eise C., 4,371,868, Cl. 340-347.0CC.
Dinwiddie, John M., Jr.; Freeman, Bobby J.; Jackson, Timothy; and Zipoy, William L., to International Business Machines Corp. I/O Controller for transferring data between a host processor and multiple I/O units. 4,371,932, Cl. 364-200.000.
Dion, Jean-Paul. Folding wheel-chair. 4,371,183, Cl. 280-42.000.
Discovision Associates: *See—*
Ceshkovsky, Ludwig; and Dakin, Wayne R., 4,371,899, Cl. 358-315.000.
Distler, Dieter; Wolf, Hans; and Welzel, Gerhard, to BASF Aktiengesellschaft. Preparation of copolymer dispersions having a narrow particle size distribution, and exhibiting dilatant flow over a broad range of concentrations. 4,371,636, Cl. 523-223.000.
DMA Systems Corporation: *See—*
Lewis, Martyn A., 4,371,903, Cl. 360-75.000.
Dmitriev, Viktor D.: *See—*
Kopysky, Boris D.; Dmitriev, Viktor D.; Khaustov, Georgy I.; Brodsky, Viktor M.; Surzhikov, Vitaly A.; Semenov, Evgeny I.; Chus, Vladimir G.; Misjulya, Viktor A.; Kandyba, Leonid F.; Ivanov, Igor P.; Bezzub, Grigory I.; Goldenberg, Yasha F.; Zonnenberg, Ilya S.; Paly, Alexandr G.; and Malkin, Arkady S., 4,370,879, Cl. 72-377.000.
Dobkin, Robert C., to National Semiconductor Corporation. High gain composite transistor. 4,371,792, Cl. 307-255.000.
Dr. C. Otto & Comp. G.m.b.H.: *See—*
Danguillier, Wilhelm; Grams, Wolfgang; and Tietze, Jurgen, 4,371,425, Cl. 202-228.000.
Dodge, Carl: *See—*
Smith, Harry D., Jr.; and Dodge, Carl, 4,370,886, Cl. 73-153.000.
Dohmoto, Hidetaka: *See—*
Fujita, Teizo; Dohmoto, Hidetaka; and Toyoda, Shigeru, 4,371,922, Cl. 364-144.000.
Dohring, Edward F.: *See—*
Hewelt, Robert K.; and Dohring, Edward F., 4,371,247, Cl. 354-300.000.
Dolan, John E. Automatic dosing dispenser. 4,370,763, Cl. 4-228.000.
Dollheimer, Jurgen; and Knoll, Klaus, to Siemens Aktiengesellschaft. Circuit arrangement for moving a marker over the picture screen. 4,371,813, Cl. 315-377.000.
Dolorgiet Beteiligungs GmbH: *See—*
Kunz, Wilhelm; and Gruber, Klaus, 4,371,545, Cl. 424-330.000.
Donges, Reinhard, to Hoechst Aktiengesellschaft. 2-(Halogenomethylphenyl)-4-halogeno-oxazole derivatives, a process for the preparation thereof, and radiation-sensitive compositions containing these derivatives. 4,371,606, Cl. 430-281.000.
Donges, Reinhard, to Hoechst Aktiengesellschaft. 4-Halogeno-5-(halogenomethyl-phenyl)-oxazole derivatives, a process for the preparation thereof, and radiation-sensitive compositions containing these derivatives. 4,371,607, Cl. 430-281.000.
Donzis, Byron A., to American Pneumatics Co. Variable pressure pad. 4,370,754, Cl. 2-2.000.
Dore, Jacques P., to Automobiles Peugeot; and Automobiles Citroen S.A. Sliding universal joints, particularly for automobile transmissions. 4,371,356, Cl. 464-111.000.
Dorris, F. Hoyt. Track roller system. 4,371,362, Cl. 474-198.000.
Dougier, Patrick: *See—*
Chamard, Alex; Dougier, Patrick; and Monteil, Jean-Bruno, 4,371,567, Cl. 427-130.000.
Doussot, Michel; and Courtois, Christian, to U.S. Philips Corporation. Thin-structure aerial. 4,371,877, Cl. 343-770.000.
Dow Chemical Company, The: *See—*
Markley, Lowell D.; Tong, Yulan C.; and Wood, Steven G., 4,371,537, Cl. 424-263.000.
Russell, Robert J., 4,371,663, Cl. 525-95.000.
Dowding, John G.; and Preston, Edward G., to Molins Limited. Perforation of web material, especially uniting paper for making ventilated filter cigarettes. 4,370,942, Cl. 118-40.000.
Doyen, Joel; and Raisin, Jean-Pierre, to Agence Nationale de Valorisation de la Recherche. Handling installation for bringing a piece to a receiving station in a predetermined position. 4,371,159, Cl. 271-228.000.
Doyle, Thomas J.: *See—*
Morningstar, Marion G.; and Doyle, Thomas J., 4,371,677, Cl. 526-80.000.
Draftex Development A.G.: *See—*
Niemanns, Gerd, 4,370,833, Cl. 49-489.000.
Drechsel, Erhart K.: *See—*
Sardisco, John B.; and Drechsel, Erhart K., 4,371,512, Cl. 423-551.000.
Dresser Industries, Inc.: *See—*
Sankey, Edwin W.; and Whittingham, David J., 4,371,086, Cl. 212-253.000.
Drill Systems, Inc.: *See—*
Becker, Floyd W.; and Regimbal, Richard R., 4,371,041, Cl. 173-28.000.
Driver, Kenneth D.: *See—*
Mauldin, Donald M.; and Jones, Richard E., III, 4,370,977, Cl. 128-80.00F.
Druke, Michael B.: *See—*
Carberry, Richard A.; Druke, Michael B.; and Gusowski, Ronald I., 4,371,925, Cl. 364-200.000.
Druschke, Wolfgang; Kerckow, Albrecht; and Stanger, Bernd, to Basf Aktiengesellschaft. Preparation of aqueous polymer dispersions having a polymer content of up to 75% by weight. 4,371,659, Cl. 524-599.000.
Dubey, Pierre, to Autelca AG. Coin checker for coins of varying diameter. 4,371,073, Cl. 194-102.000.
Dubief, Claude: *See—*
Vanlerberghe, Guy; Sebag, Henri; Zysman, Alexandre; and Dubief, Claude, 4,371,517, Cl. 424-70.000.
Dubroeucq, Georges: *See—*
Lacombat, Michel; and Dubroeucq, Georges, 4,371,264, Cl. 356-356.000.
Duda, Richard M.: *See—*
Wagner, Walter R.; and Duda, Richard M., 4,370,919, Cl. 98-122.000.
Duepro AG: *See—*
Woerwag, Peter, 4,370,777, Cl. 15-339.000.
Dufek, Wayne L.: *See—*
Lawson, Charles A., II; and Dufek, Wayne L., 4,371,496, Cl. 376-258.000.
Dugan, John M., to Rockwell International Corporation. NRZ Data phase detector. 4,371,974, Cl. 375-82.000.
Dugan, John M., to Rockwell International Corporation. Sampling NRZ data phase detector. 4,371,975, Cl. 375-120.000.
Duhl, David N.; and Nguyen-Dinh, Xuan, to United Technologies Corporation. Single crystal nickel superalloy. 4,371,404, Cl. 148-3.000.
Dull, Ernst H.: *See—*
Bube, Carsten; Dull, Ernst H.; Thiele, Gerd; and Zeller, Hans, 4,371,910, Cl. 361-106.000.
Du Mayne, James D.: *See—*
Gregory, George K. E.; Peach, James M.; and Du Mayne, James D., 4,371,516, Cl. 424-22.000.
Du Pont de Nemours, E. I., and Company: *See—*
Anderson, Burton C.; and Frazer, August H., 4,371,690, Cl. 528-190.000.
Baxter, Warren N.; Merckling, Nicholas G., deceased; Masukawa, Noelle K., administratrix; Robinson, Ivan M.; and Stamatoff, Gelu S., 4,371,680, Cl. 526-159.000.
Bither, Tom A., Jr., 4,371,702, Cl. 549-260.000.
Chang, David C., 4,371,657, Cl. 524-512.000.
Finizio, Michael, 4,371,541, Cl. 424-273.00R.
Jaffe, Edward E., 4,371,642, Cl. 524-88.000.
Levitt, George, 4,371,391, Cl. 71-93.000.
Nazarenko, Nicholas, 4,371,459, Cl. 252-514.000.
Rapoport, Morris, 4,371,474, Cl. 260-465.80R.
Renner, Carl A., 4,371,605, Cl. 430-280.000.
Robinson, Ivan M., 4,371,687, Cl. 528-79.000.
Selby, Thomas P., 4,371,736, Cl. 544-316.000.
Wolfe, James R., Jr., 4,371,692, Cl. 528-289.000.
Wolfe, James R., Jr., 4,371,693, Cl. 528-292.000.
Dupuis, Robert C. Pocket-size chess game. 4,371,168, Cl. 273-239.000.
Durkin, William N.: *See—*
Taylor, G. Brandt, 4,371,623, Cl. 435-290.000.

Duvdevani, Ilan: *See—*
Boyer, Gerard A. M.; Duvdevani, Ilan; and Muller, Jean-Marie A., 4,371,641, Cl. 524-70.000.
Dynamit Nobel AG: *See—*
Steffen, Klaus-Dieter; and Thallmeier, Manfred, 4,371,709, Cl. 568-33.000.
Dynamit Nobel Aktiengesellschaft: *See—*
Schaefer, Hans; and Budich, Wolfgang, 4,370,830, Cl. 49-413.000.
Spielau, Paul; Vohwinkel, Horst; and Kuhnel, Werner, 4,371,654, Cl. 524-296.000.
E.G.O. Elektro-Berate Blanc u. Fischer: *See—*
Gossler, Gerhard; Petri, Heinz; and Mayer, Hans, 4,371,780, Cl. 219-446.000.
E M I Limited: *See—*
Voles, Roger, 4,370,914, Cl. 89-41.0TV.
E. R. Squibb & Sons, Inc.: *See—*
Rovnyak, George C., 4,371,526, Cl. 424-200.000.
Rovnyak, George C., 4,371,543, Cl. 424-319.000.
E-Y Laboratories, Inc.: *See—*
Chu, Albert E., 4,371,515, Cl. 436-544.000.
Early, Judson H.: *See—*
Off, Joseph W. A.; Early, Judson H.; Roady, Daniel K.; and Thayer, Theodore B., 4,371,074, Cl. 198-339.000.
East, Anthony J.: *See—*
Calundann, Gordon W.; and East, Anthony J., 4,371,660, Cl. 524-601.000.
Eastman, Alan D.; and Gardner, Lloyd E., to Phillips Petroleum Company. Catalytic compounds employing alumina promoted with zinc, titanium, cobalt and molybdenum as the catalytic agent. 4,371,458, Cl. 252-439.000.
Eastman, Alan D., to Phillips Petroleum Company. Dehydrogenation of organic compounds with a zinc silicate catalyst. 4,371,730, Cl. 585-627.000.
Eastman Kodak Company: *See—*
Anagnostopoulos, Constantine N.; and Ranadive, Deepak K., 4,371,890, Cl. 357-59.000.
Clem, Katherine V., 4,371,740, Cl. 136-256.000.
Day, Pierce B.; and Marsiglio, Carl M., 4,371,253, Cl. 355-4.000.
Mir, Jose M., 4,371,892, Cl. 358-75.000.
Morse, Theodore H., 4,371,251, Cl. 355-3.0TR.
Eaton Corporation: *See—*
Gritter, David J., 4,371,824, Cl. 318-722.000.
Ebauches S.A.: *See—*
Laesser, Claude; Zafferri, Roberto; and Depery, Jean, 4,371,821, Cl. 318-696.000.
Eberle, William J., to General Battery Corporation. Method for enveloping the plates of an automotive storage battery with separator material. 4,370,803, Cl. 29-623.400.
EC Erdolchemie GmbH: *See—*
Herwig, Jens; Schleppinghoff, Bernhard; and Scheef, Hans-Volker, 4,371,725, Cl. 568-907.000.
Eckersley, Colin. Placer mining sluice. 4,371,435, Cl. 209-44.000.
Eckert, Wolfgang; Holtkamp, Bernd; and Kilian, Ernst A., to U.S. Philips Corporation. Circuit arrangement for eliminating turn-on and turn-off clicks in an amplifier. 4,371,841, Cl. 330-51.000.
Eckhardt, Frizt, to Patent-Treuhand-Gesellschaft fur Elektrische Gluhlampen mbH. Incandescent lamp with mechanically attached base. 4,371,807, Cl. 313-318.000.
ECS Telecommunications, Inc.: *See—*
Matthews, Gordon H.; Tansil, Thomas B.; and Fannin, Michael L., 4,371,752, Cl. 179-7.1TP.
Edamura, Mizuo: *See—*
Tanaka, Akio; Edamura, Mizuo; Furuitsu, Satoshi; and Kunise, Satoru, 4,371,787, Cl. 422-186.060.
Eder, Ulrich: *See—*
Braestrup, Claus T.; Nielsen, Mogens C.; Christensen, Joergen A.; Engelstoft, Mogens; Schou, Henning; Eder, Ulrich; Neef, Gunter; Huth, Andreas; Rahtz, Dieter; and Schmiechen, Ralph, 4,371,536, Cl. 424-256.000.
Edgely Aircraft Limited: *See—*
Edgley, John K., 4,371,133, Cl. 244-54.000.
Edgley, John K., to Edgely Aircraft Limited. Ducted propeller aircraft. 4,371,133, Cl. 244-54.000.
Edmonds, James T., Jr.; and Scoggins, Lacey E., to Phillips Petroleum Company. Preparation of alkali metal aminoalkanoates. 4,371,706, Cl. 562-553.000.
Edmunds, Gregory A. Latch mechanism and vandal resistant housing. 4,370,873, Cl. 70-163.000.
Edo-Aire Mitchell: *See—*
Younkin, James R., 4,370,815, Cl. 33-318.000.
Edwards, Gordon L., Jr.; and Smith, Walter A., to NCR Corporation. Method and apparatus for detecting and correcting errors in a memory. 4,371,963, Cl. 371-50.000.
Edwards, Howard W. Tilt mount for mounting an outboard motor on the side of a canoe. 4,371,349, Cl. 440-56.000.
Effex Innovation A/S: *See—*
Helshoj, Egon, 4,371,028, Cl. 165-10.000.
Eggensperger, Heinz: *See—*
Munzenmaier, Wolfgang; Eggensperger, Heinz; Ehlers, Helmut H.; Beilfuss, Wolfgang; Bucklers, Lothar; and Harke, Hans-Peter, 4,371,547, Cl. 424-333.000.
Ehlers, Helmut H.: *See—*
Munzenmaier, Wolfgang; Eggensperger, Heinz; Ehlers, Helmut H.; Beilfuss, Wolfgang; Bucklers, Lothar; and Harke, Hans-Peter, 4,371,547, Cl. 424-333.000.
Ehrecke, Kevin L.: *See—*
Cain, Darryl F.; and Ehrecke, Kevin L., 4,371,299, Cl. 410-44.000.
Eibeck, Richard E.; Robinson, Martin A.; Evans, Francis E.; and Recla, Eugene B., to Allied Corporation. Process for the conversion of boron trifluoride dimethyl ether complex to the boron trifluoride dialkyl ether complex. 4,371,707, Cl. 568-6.000.
Eichner, Falk J., to Eichner Organization KG. Rotary magazine assembly for holding information bearing cards. 4,370,821, Cl. 40-497.000.
Eichner Organization KG: *See—*
Eichner, Falk J., 4,370,821, Cl. 40-497.000.
Eidschun, Charles D., to Micro-Plate, Inc. Continuous processing of printed circuit boards. 4,371,422, Cl. 156-640.000.
Elbe, Hans-Ludwig: *See—*
Kramer, Wolfgang; and Elbe, Hans-Ludwig, 4,371,708, Cl. 568-31.000.
Electro-Motion, Inc.: *See—*
Kruger, Johann, 4,371,820, Cl. 318-468.000.
Electro-Plasma, Inc.: *See—*
Muehlberger, Erich, 4,371,563, Cl. 427-34.000.
Elmer, Ben R.: *See—*
Biard, James R.; and Elmer, Ben R., 4,371,847, Cl. 330-307.000.
Eltra Corporation: *See—*
Roberts, William J., 4,371,833, Cl. 324-161.000.
Emerson Electric Co.: *See—*
Tuggle, Lloyd H., 4,370,855, Cl. 60-317.000.
Emhart Industries, Inc.: *See—*
Lipp, Ellis P.; and Utken, Jay, 4,371,862, Cl. 338-174.000.
Empire Enterprises, Inc.: *See—*
Grossman, Harold; Merrill, Richard E.; and Monaghan, Paul B., 4,371,632, Cl. 523-164.000.
Endoh, Masayuki: *See—*
Matsumoto, Shuichi; Yasuda, Kenji; Endoh, Masayuki; and Harada, Kunihiro, 4,371,713, Cl. 568-614.000.
Energy Development Associates, Inc.: *See—*
Chi, Michael C.; and Carr, Peter, 4,371,825, Cl. 320-5.000.
Engelbart, Wilhelm. Trouser pressing apparatus. 4,371,102, Cl. 223-73.000.
Engels, Bernd; Heise, Friedrich; and Cremer, Heinz P., to Keiper Automobiltechnik GmbH & Co. KG. Brake-type spring coupling for adjustment gears, particularly in seat adjusters. 4,371,065, Cl. 192-8.00C.
Engelstoft, Mogens: *See—*
Braestrup, Claus T.; Nielsen, Mogens C.; Christensen, Joergen A.; Engelstoft, Mogens; Schou, Henning; Eder, Ulrich; Neef, Gunter; Huth, Andreas; Rahtz, Dieter; and Schmiechen, Ralph, 4,371,536, Cl. 424-256.000.
Engineered Air Systems, Inc.: *See—*
Fisher, J. D., 4,370,863, Cl. 62-89.000.
Enomoto, Tadao; and Kasai, Hidefumi, to Citizen Watch Company Limited. Timepiece hand manufacturing method. 4,371,429, Cl. 204-4.000.
Erickson, Bert K., to General Electric Company. Self aligning bandpass filtering system. 4,371,980, Cl. 455-208.000.
Erickson, Dale L. Suspensory urinal sheath expander. 4,370,979, Cl. 128-303.00A.
Erlichman, Irving, to Polaroid Corporation. Modular production line unit and system. 4,371,075, Cl. 198-345.000.
Ermilov, Nikolai P.: *See—*
Mitin, Leonid A.; Mitrofanov, Vladislav V.; Fadeev, Vladimir Y.; Fadeev, Petr Y.; Korobkov, Vladlen V.; Kulagin, Rim A.; Vorozheikin, Anatoly A.; Ermilov, Nikolai P.; Smirnov, Jury V.; and Besedin, Ivan A., 4,370,916, Cl. 91-173.000.
Esaki, Leo; and Chang, Chin-An, to United States of America, Army. InAs-GaSb Tunnel diode. 4,371,884, Cl. 357-12.000.
Escher Wyss GmbH: *See—*
Kruppa, Claus; and Wuhrer, Wolfgang, 4,371,350, Cl. 440-69.000.
Escher Wyss Limited: *See—*
Sedlacek, Franz; Oertle, Jakob; and Cebulla, Dietrich, 4,371,115, Cl. 239-524.000.
Essilor International Cie Generale d'Optique: *See—*
Lhospice, Bernard, 4,371,238, Cl. 351-106.000.
Estel Hoogovens BV: *See—*
Van Laar, Jacobus, 4,371,334, Cl. 432-95.000.
Etablissements Georges Klein: *See—*
Ulmann, Jean-Pierre, 4,370,825, Cl. 49-47.000.
Etablissements M. Muller & Cie: *See—*
Coetsier, Paul; and Ravarotto, Robert, 4,370,883, Cl. 73-117.000.
Etablissements Nativelle S.A.: *See—*
Tsatsas, Georges; Costakis, Evan E.; and Foscolos, Georges V., 4,371,538, Cl. 424-267.000.
ETC, Incorporated: *See—*
Spangler, Paul J.; and Koslo, Robert C., 4,371,229, Cl. 339-223.00R.
Etcheparre, Bernard: *See—*
Etcheparre, Jean; and Etcheparre, Bernard, 4,370,932, Cl. 105-163.0SK.
Etcheparre, Jean; and Etcheparre, Bernard, to Lectra Systemes S.A. Apparatus for the interconnection of two mobile carriers guided by parallel rails. 4,370,932, Cl. 105-163.0SK.
Ethyl Corporation: *See—*
Zaiko, Edward J.; and Ranken, Paul F., 4,371,473, Cl. 260-465.00G.
Evans, Francis E.: *See—*
Eibeck, Richard E.; Robinson, Martin A.; Evans, Francis E.; and Recla, Eugene B., 4,371,707, Cl. 568-6.000.
Everest & Jennings, Inc.: *See—*
Rodaway, Keith S., 4,370,790, Cl. 29-157.00T.

Evjen, Joseph L., Jr.: *See—*
Baxter, Duane W.; Evjen, Joseph L., Jr.; Hoveland, William C.; Roble, Roy A.; Smith, Donald R.; and Wirz, John H., 4,371,902, Cl. 360-75.000.
Ex-Cell-O Corporation: *See—*
Brennan, Michael J., 4,371,359, Cl. 464-136.000.
Exxon Production Research Company: *See—*
Abernathy, William L.; Bertram, Billy B.; Davis, Anthony D.; and Ward, Richard M., 4,371,038, Cl. 166-380.000.
Exxon Research and Engineering Co.: *See—*
Agarwal, Pawan K.; and Makowski, Henry S., 4,371,640, Cl. 524-66.000.
Agarwal, Pawan K., 4,371,652, Cl. 524-216.000.
Boyer, Gerard A. M.; Duvdevani, Ilan; and Muller, Jean-Marie A., 4,371,641, Cl. 524-70.000.
Faccini, Ernest C.; and Wergen, Thomas E., to United States of America, Navy. Cutting torch and method. 4,371,771, Cl. 219-70.000.
Fadeev, Petr Y.: *See—*
Mitin, Leonid A.; Mitrofanov, Vladislav V.; Fadeev, Vladimir Y.; Fadeev, Petr Y.; Korobkov, Vladlen V.; Kulagin, Rim A.; Vorozheikin, Anatoly A.; Ermilov, Nikolai P.; Smirnov, Jury V.; and Besedin, Ivan A., 4,370,916, Cl. 91-173.000.
Fadeev, Vladimir Y.: *See—*
Mitin, Leonid A.; Mitrofanov, Vladislav V.; Fadeev, Vladimir Y.; Fadeev, Petr Y.; Korobkov, Vladlen V.; Kulagin, Rim A.; Vorozheikin, Anatoly A.; Ermilov, Nikolai P.; Smirnov, Jury V.; and Besedin, Ivan A., 4,370,916, Cl. 91-173.000.
Fahey, Dennis M., to PPG Industries, Inc. Aqueous treating composition for glass fiber yarns and treated yarns. 4,371,584, Cl. 428-392.000.
Faigle, Heinz, to Heinz Faigle KG. Arrangement in pairs of plastic sliding on plastic in tribologic systems. 4,371,445, Cl. 252-12.000.
Fan, John C. C.; Geis, Michael W.; and Tsaur, Bor-Yeu, to Massachusetts Institute of Technology. Lateral epitaxial growth by seeded solidification. 4,371,421, Cl. 156-624.000.
Fang, San-Chin; and Fraser, Donald L., Jr., to Bell Telephone Laboratories, Incorporated. Semiconductor differential amplifier circuit with feedback bias control. 4,371,843, Cl. 330-253.000.
Fannin, Michael L.: *See—*
Matthews, Gordon H.; Tansil, Thomas B.; and Fannin, Michael L., 4,371,752, Cl. 179-7.1TP.
Farabaugh, Aloysius W., to PPG Industries, Inc. Method of determining optical quality of a shaped article. 4,371,482, Cl. 264-40.100.
Farber, Mark I., to Jeneric Industries, Inc. Precious metal recovery apparatus. 4,371,436, Cl. 209-268.000.
Farha, Floyd E., Jr.; and Gardner, Lloyd E., to Phillips Petroleum Company. Catalytic hydrogenation of olefins, hydrodesulfurization of organic sulfur compounds and/or selective removal of hydrogen sulfide from fluid streams. 4,371,507, Cl. 423-230.000.
Farha, Floyd E., Jr.; and Gardner, Lloyd E., to Phillips Petroleum Company. Selective removal of olefins over zinc titanate promoted with selected metals. 4,371,728, Cl. 585-258.000.
Farneti, Arrigo: *See—*
Cane, Alessandro; and Farneti, Arrigo, 4,371,101, Cl. 222-636.000.
Fasano, Michael C., to Porta Systems Corp. Bridge lifter module. 4,371,756, Cl. 179-35.000.
Federal Paper Board Company, Inc.: *See—*
Kulig, Francis V., 4,371,110, Cl. 229-31.0FS.
Feiler, Horst; and Konig, Gunter, to Zinser-Textilmaschinen GmbH. Yarn winding device. 4,371,121, Cl. 242-18.0DD.
Feldkamper, Richard, to Windmoller & Holscher. Apparatus for securing to format cylinders format plates for the accurate transfer of applications of adhesive. 4,370,787, Cl. 29-124.000.
Felice, Leo C. Positive stop center. 4,370,907, Cl. 82-33.00R.
Fermeglia, Gildo; and Spector, George. Barrier extension adapter. 4,371,284, Cl. 403-301.000.
Ferris, Daniel B.; Trossman, Martin M.; and Luchsinger, Charles R., to Synergistics Research Corporation. Cylindrical puzzle. 4,371,166, Cl. 273-157.00R.
Ferrofluidics Corporation: *See—*
Sibley, Clifton B.; and Bell, Robert P., 4,371,502, Cl. 422-249.000.
Fiat Auto S.p.A.: *See—*
Giacosa, Dante, 4,371,361, Cl. 474-201.000.
Tornatore, Giovanni; and Bogetti, Lorenzo, 4,371,828, Cl. 322-32.000.
Fiberglas Canada, Inc.: *See—*
Schuller, Marius C., 4,371,122, Cl. 242-43.00R.
Fibun B.V.: *See—*
Davidson, Roderick I., 4,371,869, Cl. 340-557.000.
Fichtel & Sachs AG: *See—*
Handke, Gunther; and Hepp, Hans, 4,371,280, Cl. 403-13.000.
Fichter, Peter K.: *See—*
Czumak, Frank M.; and Fichter, Peter K., 4,371,249, Cl. 354-304.000.
Fields, Ellis K.; and Nimry, Tayseer S., to Standard Oil Company (Indiana). Adducts of 1-cyclohexene-1,2-dicarboxylic anhydride with olefins. 4,371,701, Cl. 549-235.000.
Fievez, Andre. Apparatus for use in producing cup-shaped pastries. 4,371,327, Cl. 425-218.000.
Fikentscher, Rolf: *See—*
Hertel, Otto; Scharf, Emil; Melzer, Jaroslav; and Fikentscher, Rolf, 4,371,674, Cl. 525-435.000.
Filhol, Stuart J. Dental anchoring means. 4,371,342, Cl. 433-225.000.
Fillman, Harold T., to Atlas Powder Company. Low water emulsion explosive compositions optionally containing inert salts. 4,371,408, Cl. 149-21.000.
Finike Italiana Marposs S.p.A.: *See—*
Possati, Mario, 4,370,812, Cl. 33-169.00R.
Finizio, Michael, to Du Pont de Nemours, E. I., and Company. Antiinflammatory and/or analgesic 3,4-dihydro-(or 1,4-dihydro)-4-aryl-2-((substituted)thio)-(1)-benzopyrano(3,4-d)imidazoles and their corresponding sulfoxides and sulfones. 4,371,541, Cl. 424-273.00R.
Firmenich SA: *See—*
Naf, Ferdinand; Decorzant, Rene; and Schulte-Elte, Karl H., 4,371,460, Cl. 252-522.00R.
First Inertia Switch Limited: *See—*
Jackman, Peter R.; and Crick, David W., 4,371,763, Cl. 200-61.45R.
Fischer, Berthold; Kabelitz, Hans-Peter; and Schmitz, Andreas, to Leybold Heraeus GmbH. Spiral rotation displacement machine with parallel motion devices ensuring relative torsional rigidity. 4,371,323, Cl. 418-55.000.
Fischer, Hermann, to M.A.N.-ROLAND Druckmaschinen Aktiengesellschaft. Paper web threading apparatus for rotary printing machines. 4,370,927, Cl. 101-228.000.
Fischer & Porter Co.: *See—*
Schmoock, Roy F., 4,370,892, Cl. 73-861.120.
Fischer, William C.: *See—*
Adams, Don L.; Fischer, William C.; Wright, Stuart C.; and Verzella, David J., 4,371,936, Cl. 364-434.000.
Adams, Don L.; Fischer, William C.; Wright, Stuart C.; and Verzella, David J., 4,371,937, Cl. 364-434.000.
Adams, Don L.; Fischer, William C.; Wright, Stuart C.; and Verzella, David J., 4,371,939, Cl. 364-434.000.
Wright, Stuart C.; Adams, Don L.; Fischer, William C.; and Verzella, David J., 4,371,938, Cl. 364-434.000.
Fisher, J. D., to Engineered Air Systems, Inc. Air conditioner. 4,370,863, Cl. 62-89.000.
Fishman, Iosif D.: *See—*
Ivanov, Valentin A.; Khodosh, Vladimir A.; Shenkman, Mikhail Y.; Kirbatov, Vladimir L.; and Fishman, Iosif D., 4,371,290, Cl. 405-150.000.
Fjallbrant, Tore. Apparatus for transforming, transferring and re-transforming of a sampled signal. 4,371,973, Cl. 375-58.000.
Flow Industries, Inc.: *See—*
Olsen, John H., 4,371,001, Cl. 137-512.300.
Fock, Jurgen; Schedlitzki, Dietmar; Holtschmidt, Ulrich; and Ahrens, Wilhelm, to Th. Goldschmidt AG. Hardenable adhesive. 4,371,683, Cl. 528-60.000.
Foglia, Thomas A.; Perlstein, Theodore; Nakano, Yoshio; and Maerker, Gerhard, to United States of America, Agriculture. Process for the preparation of branched chain fatty acids and esters. 4,371,469, Cl. 260-405.600.
Forbes, Brian K.: *See—*
Catiller, Robert D.; and Forbes, Brian K., 4,371,931, Cl. 364-200.000.
Forchielli, Americo L., to Petrolite Corporation. Polishes/polish restorers. 4,371,398, Cl. 106-10.000.
Ford Aerospace & Communications Corporation: *See—*
Rubin, Michael D., 4,371,839, Cl. 329-104.000.
Ford Motor Company: *See—*
Strasser, Robert A.; and Goch, Stephen W., 4,370,930, Cl. 102-530.000.
Fordsmand, Marc. Heat exchanger, particularly for heat pumps. 4,371,036, Cl. 165-163.000.
Forestal, Robert J.: *See—*
Martin, Verble C.; and Forestal, Robert J., 4,370,842, Cl. 52-514.000.
Forsythe, Curtis J., to Top-Scor Products, Inc. Stearoyl lactylate salt composition having improved physical properties and method of production. 4,371,561, Cl. 426-653.000.
Foscolos, Georges V.: *See—*
Tsatsas, Georges; Costakis, Evan E.; and Foscolos, Georges V., 4,371,538, Cl. 424-267.000.
Foster, Donald D.; and Magers, Wallace F., to Realex Corporation. Size-compensating collar in a pump dispenser. 4,371,099, Cl. 222-321.000.
Fowler, Jacky L.: *See—*
Principe, William L.; and Fowler, Jacky L., 4,371,309, Cl. 414-676.000.
Fram Corporation: *See—*
Thornton, Donald I., 4,371,439, Cl. 210-232.000.
Francotyp GmbH: *See—*
Denzin, Horst, 4,371,416, Cl. 156-441.500.
Frank, Dieter, to Robert Bosch GmbH. Circuit for decreasing the effect of parasitic capacitances in field effect transistors used in coupling networks. 4,371,797, Cl. 307-577.000.
Franklin Corrugated Design, Inc.: *See—*
Wright, Vester L., III, 4,371,369, Cl. 493-373.000.
Fraser, Alberto, to Commonwealth of Puerto Rico. Beach mat. 4,370,767, Cl. 5-417.000.
Fraser, Donald L., Jr.: *See—*
Fang, San-Chin; and Fraser, Donald L., Jr., 4,371,843, Cl. 330-253.000.
Frates, Paul S.: *See—*
Scholl, Charles H.; and Frates, Paul S., 4,371,096, Cl. 222-190.000.
Frazer, August H.: *See—*
Anderson, Burton C.; and Frazer, August H., 4,371,690, Cl. 528-190.000.
Fredrickson, Howard J., to Cornelius Cannon, Inc. Display rack. 4,371,085, Cl. 211-149.000.

Freel, John: *See—*
Montagna, John C.; Galli, Robert D.; and Freel, John, 4,371,428, Cl. 203-51.000.
Freeman, Bobby J.: *See—*
Dinwiddie, John M., Jr.; Freeman, Bobby J.; Jackson, Timothy; and Zipoy, William L., 4,371,932, Cl. 364-200.000.
Freeman, Timothy J.; Goler, William J.; and Humberstone, Kenneth J. Laminated clevis pin. 4,371,202, Cl. 294-82.00R.
Freer, Charles S., Jr.: *See—*
Brann, John J.; Freer, Charles S., Jr.; and Jensen, Warren W., 4,371,929, Cl. 364-200.000.
Freimuth, John H.: *See—*
Campbell, Willis R.; Freimuth, John H.; Diederich, Anthony F., Jr.; and Jennings, Richard E., 4,370,848, Cl. 56-341.000.
Freisler, Erhard, to Ruti Machinery Works Ltd. Gripper head for looms working with removal of the filling thread from stationary bobbins. 4,371,008, Cl. 139-348.000.
Freitag, Dieter: *See—*
Friedhofen, Gerhard; Serini, Volker; Neumann, Rainer; Freitag, Dieter; and Schwarz, Hans-Helmut, 4,371,691, Cl. 528-196.000.
Fretwell, Jack W., Jr. Yieldable load release connector. 4,370,783, Cl. 24-201.0TR.
Frias, Robert; Minnis, C. W.; Hawkins, A. Hubert; and Davis, Wendell, to Ingram Corporation. Pipe handling apparatus. 4,371,302, Cl. 414-22.000.
Frick, Richard H.; Hill, Randolph J.; and Roland, David R., to Kimberly-Clark Corporation. Differentially stretched elastic. 4,371,417, Cl. 156-495.000.
Frick, Roger L., to Rosemount Inc. Capacitive pressure transducer with isolated sensing diaphragm. 4,370,890, Cl. 73-718.000.
Friedhofen, Gerhard; Serini, Volker; Neumann, Rainer; Freitag, Dieter; and Schwarz, Hans-Helmut, to Bayer Aktiengesellschaft. Preparation of polycarbonate from specific crude bisphenols. 4,371,691, Cl. 528-196.000.
Friedman, Herman H.; Giacone, Joseph; Cante, Charles J.; and Frost, John R., to General Foods Corporation. Method for improving the functionality of protein materials. 4,371,562, Cl. 426-656.000.
Friello, Dominick R.: *See—*
Cherukuri, Subraman R.; Friello, Dominick R.; Parker, Ellery; Hopkins, Walter; and Mackay, Donald A. M., 4,371,549, Cl. 426-3.000.
Fritz Eichenauer GmbH and Co. KG: *See—*
Roller, Hanno; and Nauerth, Karl-Heinz, 4,371,777, Cl. 219-298.000.
Fritzinger, George H. Traffic-actuated control systems providing an advance signal to indicate when the direction of traffic will change. 4,371,863, Cl. 340-43.000.
Fritzsche, Eldred N.; Josephson, Edgar F.; and Pulcrano, Frank C., to ACF Industries, Incorporated. Railway car fabrication facility. 4,371,303, Cl. 414-281.000.
Frost, John R.: *See—*
Friedman, Herman H.; Giacone, Joseph; Cante, Charles J.; and Frost, John R., 4,371,562, Cl. 426-656.000.
Fruehman, Peter G.: *See—*
Martin, Verble C.; and Forestal, Robert J., 4,370,842, Cl. 52-514.000.
Fry, Jeremy J.; and Smith, Peter R., to Rotork Controls Limited. Drive mechanisms, more particularly for valve actuators. 4,370,902, Cl. 74-625.000.
Fryer, Rodney I.: *See—*
Walser, Armin; and Fryer, Rodney I., 4,371,468, Cl. 260-239.0BD.
Fuchs, Ralph W.: *See—*
Abdelrahman, Mona; Fuchs, Ralph W.; Holman, James O.; Johnson, Robert G.; and Scott, M. Walter, 4,371,861, Cl. 338-25.000.
Fuji Metal Mfg. Co., Ltd.: *See—*
Mese, Hisayoshi; and Kanaya, Shigeo, 4,371,146, Cl. 251-209.000.
Fuji Photo Film Co., Ltd.: *See—*
Oosaka, Shigenori; and Murakoshi, Makoto, 4,371,239, Cl. 353-26.00R.
Sugiyama, Masatoshi; Nakanishi, Ichiro; Ogawa, Akira; and Maekawa, Masakazu, 4,371,582, Cl. 428-341.000.
Toyoda, Takashi; Itoh, Isamu; and Yamada, Minoru, 4,371,610, Cl. 430-445.000.
Fujii, Setsuro: *See—*
Unemi, Norio; Kitazato, Kenji; and Fujii, Setsuro, 4,371,535, Cl. 424-251.000.
Fujikawa, Hroaki: *See—*
Nakagaki, Noboru; and Fujikawa, Hroaki, 4,370,871, Cl. 66-202.000.
Fujikawa, Katsuhisa: *See—*
Kago, Yoshiyuki; Akita, Sigeyuki; and Fujikawa, Katsuhisa, 4,371,835, Cl. 324-174.000.
Fujikawa, Kenji, to Canon Kabushiki Kaisha. Moving picture camera in which constant speed zooming is effected. 4,371,241, Cl. 352-140.000.
Fujimoto, Kenichi: *See—*
Horita, Yoshiharu; Fujimoto, Kenichi; Hoshino, Michio; Takito, Tetsuo; and Muraki, Masayoshi, 4,371,726, Cl. 585-3.000.
Fujimura, Hajime; Hiramatsu, Yasuzo; Yabuuchi, Takahiro; Hisaki, Masakatu; Takikawa, Katsuo; Honna, Takaji; Miyake, Hidekazu; and Kajitani, Makoto, to Taiho Pharmaceutical Company Limited. Pharmaceutical composition containing 1,1,3,5-substituted biuret compound. 4,371,544, Cl. 424-322.000.
Fujioka, Kazuyoshi; and Ikkatai, Mitsuo, to Nissan Motor Company, Limited. Wet multiple disc clutch device for a vehicle transmission. 4,371,066, Cl. 192-85.0AA.
Fujisawa, Norio, to Tokyo Shibaura Denki Kabushiki Kaisha. ROM Controlled protective relay system for power transmission network. 4,371,947, Cl. 364-900.000.
Fujisawa Pharmaceutical Company, Ltd.: *See—*
Takaya, Takao; Masugi, Takashi; Ogino, Takashi; and Tsuji, Kiyoshi, 4,371,531, Cl. 424-246.000.
Fujishima, Toshihiko: *See—*
Tone, Fumihiro; and Fujishima, Toshihiko, 4,371,662, Cl. 525-89.000.
Fujita, Takafumi: *See—*
Ishida, Jiro; and Fujita, Takafumi, 4,371,143, Cl. 248-638.000.
Fujita, Teizo; Dohmoto, Hidetaka; and Toyoda, Shigeru, to Izumi Denki Corporation. Process stepping sequential controller. 4,371,922, Cl. 364-144.000.
Fujitsu Limited: *See—*
Ikubo, Hiroyuki; and Wada, Kunihiko, 4,371,403, Cl. 148-1.500.
Maeda, Kohichi; and Yoshida, Masanobu, 4,371,956, Cl. 365-185.000.
Masuda, Sigefumi, 4,371,233, Cl. 350-96.180.
Sasaki, Nobuo, 4,371,955, Cl. 365-185.000.
Fukuda, Goro: *See—*
Ohsaki, Kozo; Hirokawa, Kazuo; Fukuda, Goro; Otsuka, Kozi; and Tomita, Tadayoshi, 4,371,452, Cl. 252-373.000.
Fukuda, Tsuguo; and Hirano, Hitoshi, to Tokyo Shibaura Electric Co., Ltd. Method for producing a lithium tantalate single crystal. 4,371,419, Cl. 156-617.0SP.
Fukuda, Yoshiaki: *See—*
Inukai, Takao; Fukuda, Yoshiaki; and Ono, Mikiya, 4,371,484, Cl. 264-44.000.
Fukuura, Yukio: *See—*
Honda, Toshio; Fukuura, Yukio; Ishikawa, Hikaru; Kojima, Shozo; Tanuma, Itsuo; and Ogawa, Masao, 4,371,411, Cl. 156-281.000.
Fulger, Charles V.; Haas, Gerhard J.; Herman, Edwin B.; and Lazarus, Charles R., to General Foods Corporation. Malt-like flavor from cereal grain root cultures. 4,371,551, Cl. 426-28.000.
Funakoshi, Satoshi: *See—*
Uemura, Yahiro; Goto, Takashi; Kano, Yoshiaki; and Funakoshi, Satoshi, 4,371,520, Cl. 424-85.000.
Funcik, Jack F.; Bennet, Joseph C.; Tubbs, Joseph T.; and Schneider, Thomas E., to Molex Incorporated. Electrical harness fabrication apparatus. 4,370,806, Cl. 29-749.000.
Fung, Anthony K.: *See—*
Plattner, Jacob J.; Pernet, Andre G.; and Fung, Anthony K., 4,371,546, Cl. 424-330.000.
Funk, Gary L.: *See—*
Stewart, William S.; Funk, Gary L.; and Smith, Dexter E., 4,371,944, Cl. 364-502.000.
Furuhata, Hiroshi: *See—*
Takeichi, Hitoshi; Furuhata, Hiroshi; Kanno, Ryoichi; Kodaira, Kuniyasu; Ohno, Mitio; and Matumoto, Hirozi, 4,370,985, Cl. 128-663.000.
Furuitsu, Satoshi: *See—*
Tanaka, Akio; Edamura, Mizuo; Furuitsu, Satoshi; and Kunise, Satoru, 4,371,787, Cl. 422-186.060.
Furukawa, Hisao: *See—*
Kato, Yasushi; and Furukawa, Hisao, 4,371,664, Cl. 525-100.000.
Furukawa, Naoki: *See—*
Ando, Hirohito; and Furukawa, Naoki, 4,371,467, Cl. 260-165.000.
Furukubo, Tatsumi, to Toyota Jidosha Kabushiki Kaisha. Engine cooling system and control valve assembly providing mixed or unmixed head and block cooling. 4,370,950, Cl. 123-41.080.
Furuminato, Kozo, to Yoshida Kogyo K K. Weathertight door assembly. 4,370,827, Cl. 49-368.000.
Fusee, Murray C., to W. R. Grace & Co. Enzymatic diagnostic composition. 4,371,611, Cl. 435-14.000.
Gabano, Jean-Paul, to Gipelec. Primary cell of high energy density in which the anode active material is an alkali metal. 4,371,592, Cl. 429-91.000.
Gabriele, Joseph M.: *See—*
Wanchik, Joseph; and Gabriele, Joseph M., 4,370,976, Cl. 128-77.000.
Gach, Peter P., to Sunbeam Plastics Corporation. Tamper indicating child resistant closure. 4,371,088, Cl. 215-220.000.
Gado, Istvan: *See—*
Jarai, Miklos; Piukovich, Sandor; Istvan, Sandor; Gado, Istvan; Szell, Valeria; and Barta, Istvan, 4,371,622, Cl. 435-253.000.
GAF Corporation: *See—*
Chiddix, Max E., 4,371,723, Cl. 568-861.000.
Gaku, Morio; and Ikeguchi, Nobuyuki, to Mitsubishi Gas Chemical Company, Inc. Curable resin composition comprising cyanate ester and acrylic alkenyl ester. 4,371,689, Cl. 528-162.000.
Galli, Robert D.: *See—*
Montagna, John C.; Galli, Robert D.; and Freel, John, 4,371,428, Cl. 203-51.000.
Gallin, Paul G., to Art Cap Company, Inc. Multiple ply garrison cap. 4,370,756, Cl. 2-195.000.
Gamble, Edward B., to Sperry Corporation. Bandwidth control circuitry for radar i-f amplifier. 4,371,846, Cl. 330-278.000.
Gammon, Michael W.; and Clarke, John A., to Metallurgical Process Limited; and I.S.C. Smelting Limited. Blast furnace smelting of zinc. 4,371,151, Cl. 266-186.000.
Gander, Jean-Gabriel, to LGZ Landis & Gyr Zug AG. Transmitting signals over alternating current power networks. 4,371,867, Cl. 340-310.00R.

Gardikes, John J.; and Kim, Young D., to Ashland Oil, Inc. Composition containing furfuryl alcohol and use thereof in foundry binders. 4,371,648, Cl. 523-144.000.
Gardner, Lloyd E.: *See—*
Eastman, Alan D.; and Gardner, Lloyd E., 4,371,458, Cl. 252-439.000.
Farha, Floyd E., Jr.; and Gardner, Lloyd E., 4,371,507, Cl. 423-230.000.
Farha, Floyd E., Jr.; and Gardner, Lloyd E., 4,371,728, Cl. 585-258.000.
Gates, James L.: *See—*
Parrish, William J.; and Gates, James L., 4,371,885, Cl. 357-24.000.
GATX Tank Erection Corporation: *See—*
Ogarek, Bernard C.; and Heisterberg, Milton W., 4,371,090, Cl. 220-224.000.
Gauthier, Gilbert: *See—*
Grapin, Jean P.; Gauthier, Gilbert; and Deltruc, Francis, 4,371,120, Cl. 241-284.000.
Gavin, Derek G., to Coal Industry (Patents) Limited. Fuel oils from coal. 4,371,727, Cl. 585-14.000.
Gazzani, Giovanni, to Crinos Industria Farmabiologica S.p.A. Carriers for spermicidal substances. 4,371,518, Cl. 424-78.000.
Gebhart, Josef; Heigwer, Gerhard; Heyder, Joachim; and Stahlhofen, Willi, to Gesellschaft fur Strahlen-und Umweltforschung mbH Munchen. Method and apparatus for determining the deposition of particles in the respiratory tract and/or for checking the function of the respiratory tract. 4,370,986, Cl. 128-716.000.
Gebruder Lodige Maschinenbau Gesellschaft mit beschrankter Haftung: *See—*
Beckschulte, Heinrich; and Schluter, Wilhelm, 4,370,945, Cl. 118-303.000.
Geessink, Bernard T. Cheese mould and/or follower with roughened inner surface and method for making same. 4,371,490, Cl. 264-162.000.
Geis, Michael W.: *See—*
Fan, John C. C.; Geis, Michael W.; and Tsaur, Bor-Yeu, 4,371,421, Cl. 156-624.000.
Geissler, Udo M., to Patent-Treuhand-Gesellschaft fuer elektrische Gluhlampen mbH. Electronic flash gun structure. 4,371,811, Cl. 315-241.00P.
Gelina, Robert P., to Apollo Molded Products. Double-seal molded plastic screw cap. 4,371,091, Cl. 220-288.000.
General Battery Corporation: *See—*
Eberle, William J., 4,370,803, Cl. 29-623.400.
Oxenreider, Terry R.; and Bush, Herbert A., Jr., 4,371,591, Cl. 429-88.000.
General Binding Corporation: *See—*
Wang, James C.; Murfitt, Donald; Livingston, Paul H.; and Joson, Luis K., 4,371,194, Cl. 281-21.00R.
Wang, James C.; Murfitt, Donald; and Livingston, Paul H., 4,371,195, Cl. 281-21.00R.
General Dynamics Corporation/Convair Div.: *See—*
Woods, Eugene L.; and Magnuson, Gustav D., 4,371,943, Cl. 364-481.000.
General Electric Company: *See—*
Balko, Edward N.; and Moulthrop, Lawrence C., 4,371,433, Cl. 204-228.000.
Betts, Joseph E.; and Holub, Fred F., 4,371,653, Cl. 524-268.000.
De Wolf, Frank T.; and Kimberlin, Dan W., 4,371,799, Cl. 310-154.000.
Erickson, Bert K., 4,371,980, Cl. 455-208.000.
Gerry, Otto F., 4,371,067, Cl. 192-93.00A.
Kushner, Gerald J.; and Raleigh, Edward, 4,371,199, Cl. 285-382.200.
Lenzing, Richard S., 4,371,855, Cl. 335-132.000.
May, John E.; and Zohler, Steven R., 4,371,860, Cl. 338-21.000.
Mullersman, Ferdinand H.; and Scholefield, Clifford L., 4,371,827, Cl. 320-48.000.
Richter, Eike, 4,371,801, Cl. 310-156.000.
Rosenquist, Niles R.; and Tyrell, John A., 4,371,650, Cl. 524-162.000.
General Foods Corporation: *See—*
Friedman, Herman H.; Giacone, Joseph; Cante, Charles J.; and Frost, John R., 4,371,562, Cl. 426-656.000.
Fulger, Charles V.; Haas, Gerhard J.; Herman, Edwin B.; and Lazarus, Charles R., 4,371,551, Cl. 426-28.000.
Oppy, Maureen A.; and Nelson, Dayle A. S., 4,371,557, Cl. 426-321.000.
Pitchon, Esra; Schara, Robert E.; Citarella, William P.; Giacone, Joseph; and Zobel, Frederick A., 4,371,556, Cl. 426-311.000.
General Motors Corporation: *See—*
Decker, Earl L., 4,371,743, Cl. 174-52.00R.
Peng, Yuchi P.; Huntzinger, Gerald O.; and Hallmann, Melvin H., 4,371,804, Cl. 310-321.000.
Genex Corporation: *See—*
Hecht, Randy I., 4,371,462, Cl. 260-112.00R.
George Fischer Aktiengesellschaft: *See—*
Rohr, Jakob, 4,371,212, Cl. 301-9.0DN.
George, Richard D.; and Vanhulle, Gary L., to Skytrends, Inc. Pivotal roof vent panel apparatus. 4,371,204, Cl. 296-218.000.
Gerl, August: *See—*
May, Adolf; Voetz, Franz J.; and Gerl, August, 4,371,399, Cl. 106-109.000.
Gerlach, Klaus: *See—*
Mathes, Nikolaus; Lange, Wolfgang; and Gerlach, Klaus, 4,371,485, Cl. 264-46.100.
Gerry, Otto F., to General Electric Company. Drive arrangement for a washing machine. 4,371,067, Cl. 192-93.00A.
Gesellschaft fur Strahlen-und Umweltforschung mbH Munchen: *See—*
Gebhart, Josef; Heigwer, Gerhard; Heyder, Joachim; and Stahlhofen, Willi, 4,370,986, Cl. 128-716.000.
Giacone, Joseph: *See—*
Friedman, Herman H.; Giacone, Joseph; Cante, Charles J.; and Frost, John R., 4,371,562, Cl. 426-656.000.
Pitchon, Esra; Schara, Robert E.; Citarella, William P.; Giacone, Joseph; and Zobel, Frederick A., 4,371,556, Cl. 426-311.000.
Giacosa, Dante, to Fiat Auto S.p.A. Metal belt for drive transmission. 4,371,361, Cl. 474-201.000.
Gibson, George W.: *See—*
Roscamp, Thomas A.; and Gibson, George W., 4,370,801, Cl. 29-603.000.
Gierut, Lawrence G.: *See—*
De, Bimal B.; Gierut, Lawrence G.; Krakau, Herbert B.; Naik, Kirit; and Tan-Atichat, Eddie, 4,371,754, Cl. 179-18.0EE.
Gifford, Richard L.; and Councilman, Richard R., to Brunswick Corporation. Drag system for spinning style fishing reel. 4,371,124, Cl. 242-84.51A.
Gilbard, Jeffrey P. Keratoconjunctivitis sicca therapy. 4,371,522, Cl. 424-153.000.
Gilbert, Robert J.: *See—*
Hostert, Richard J.; Mathiasmeier, Michael J.; and Gilbert, Robert J., 4,371,082, Cl. 211-22.000.
Giles, Duane D.; and Osborn, Richard W. Apparatus for making composition logs by compressing particles. 4,371,328, Cl. 425-344.000.
Gilliatt, Charles L., to Raytheon Company. Adjustable microwave oven door seal. 4,371,770, Cl. 219-10.55D.
Gilling, Donald A.; and McCaskill, Albert G., to James River-Dixie/-Northern, Inc. Package including product support insert. 4,371,553, Cl. 426-124.000.
Gipelec: *See—*
Gabano, Jean-Paul, 4,371,592, Cl. 429-91.000.
Gipson, Robert M.: *See—*
McEntire, Edward E.; and Gipson, Robert M., 4,371,704, Cl. 549-518.000.
Glasbergen, Johannes W.: *See—*
Schwarz, Dieter; Misner, Ralf; and Glasbergen, Johannes W., 4,371,972, Cl. 375-30.000.
Glaxo Group Limited: *See—*
Collington, Eric W.; Hallet, Peter; Wallis, Christopher J.; and Hayes, Norman F., 4,371,530, Cl. 424-244.000.
Gleim, Robert D.; and Gray, Richard T., to Rohm and Haas Company. Zero valent metal recovery with polyacetylene. 4,371,393, Cl. 75-108.000.
Glynn, Christopher. Sound producing instrument. 4,370,912, Cl. 84-418.000.
Gmelin, Karl; Stiefel, Peter; and Peters, Klaus-Jurgen, to Robert Bosch GmbH. Fuel injection system. 4,370,967, Cl. 123-452.000.
Goch, Stephen W.: *See—*
Strasser, Robert A.; and Goch, Stephen W., 4,370,930, Cl. 102-530.000.
Godlewski, Harry H. Motor securing device for watercraft. 4,371,144, Cl. 248-641.000.
Goebel, Joseph A.; Barkalow, Richard H.; and Ulion, Nicholas E., to United Technologies Corporation. Hot corrosion resistant coatings. 4,371,570, Cl. 427-248.100.
Goeft, Manfred; and Maurer, Dieter, to Zahnradfabrik Friedrichshafen A.G. Steering axle. 4,371,049, Cl. 180-255.000.
Goguen, Robert P. Swimming pool/spa selector valve. 4,371,003, Cl. 137-625.460.
Gold Fields Mining and Development Limited: *See—*
Odendaal, David F., 4,371,289, Cl. 405-150.000.
Goldberg, Edward M.: *See—*
Bazell, Seymour; and Goldberg, Edward M., 4,370,987, Cl. 128-760.000.
Goldberg, Jerome; and Bloch, Christopher D., to Springhill Laboratories, Inc. Adjusting automobile suspension system. 4,371,191, Cl. 280-707.000.
Goldenberg, Yasha F.: *See—*
Kopysky, Boris D.; Dmitriev, Viktor D.; Khaustov, Georgy I.; Brodsky, Viktor M.; Surzhikov, Vitaly A.; Semenov, Evgeny I.; Chus, Vladimir G.; Misjulya, Viktor A.; Kandyba, Leonid F.; Ivanov, Igor P.; Bezzub, Grigory I.; Goldenberg, Yasha F.; Zonnenberg, Ilya S.; Paly, Alexandr G.; and Malkin, Arkady S., 4,370,879, Cl. 72-377.000.
Goldner, Richard. Pointless end pin adaptor for the violoncello and the string bass. 4,370,911, Cl. 84-280.000.
Goler, William J.: *See—*
Freeman, Timothy J.; Goler, William J.; and Humberstone, Kenneth J., 4,371,202, Cl. 294-82.00R.
Gollinger, Wolfgang, to ITT Industries, Inc. Monolithic integrated circuit. 4,371,794, Cl. 307-269.000.
Gonzalvo, Sulpicio A. Water-driven brush. 4,370,771, Cl. 15-29.000.
Goodyear Tire & Rubber Company, The: *See—*
Balogh, George F., 4,371,733, Cl. 585-860.000.
Gorczyca, Edward. Tension model device. 4,371,344, Cl. 434-302.000.
Gordiski, Ronald J.; Bennett, Robert G., Jr.; Parrella, Alfred T.; and Bagnall, Michael, to USM Corporation. Control apparatus for roll grinders. 4,371,941, Cl. 364-475.000.
Gorkiewicz, Mitchell F. Retractable scissors tong mechanism. 4,371,222, Cl. 312-211.000.
Gossen, Paul: *See—*
Prussen, John; and Gossen, Paul, 4,371,279, Cl. 403-8.000.

Gossler, Gerhard; Petri, Heinz; and Mayer, Hans, to E.G.O. Elektro-Berate Blanc u. Fischer. Multi-element cooking unit with control device. 4,371,780, Cl. 219-446.000.
Gotje, Egbert B. G. W.; and Kerstens, Franciscus N. A., to U.S. Philips Corporation. Magnetron having a filter on the output probe. 4,371,848, Cl. 331-91.000.
Goto, Takashi: *See—*
Uemura, Yahiro; Goto, Takashi; Kano, Yoshiaki; and Funakoshi, Satoshi, 4,371,520, Cl. 424-85.000.
Gough & Co. (Hanley) Ltd.: *See—*
Gough, George T., 4,370,913, Cl. 86-45.000.
Gough, George T., to Gough & Co. (Hanley) Ltd. Ammunition handling system. 4,370,913, Cl. 86-45.000.
Goulart, Joseph G. Golf club caddy. 4,371,022, Cl. 150-1.50R.
Goyert, Wilhelm: *See—*
Quiring, Bernd; Niederdellmann, Georg; Goyert, Wilhelm; and Wagner, Hans, 4,371,684, Cl. 528-65.000.
Graf, Ronald E. Miniature fluid-controlled switch. 4,371,753, Cl. 179-18.0GF.
Graham Magnetics, Inc.: *See—*
Manly, William A., 4,371,742, Cl. 174-36.000.
Grams, Wolfgang: *See—*
Danguillier, Wilhelm; Grams, Wolfgang; and Tietze, Jurgen, 4,371,425, Cl. 202-228.000.
Grantz, Helmut: *See—*
Andres, Rudolf; and Grantz, Helmut, 4,371,125, Cl. 242-107.000.
Grapin, Jean P.; Gauthier, Gilbert; and Deltruc, Francis, to Ciments Lafarge France. Particle grinder with high degree of sound isolation. 4,371,120, Cl. 241-284.000.
Gratani, Francesco: *See—*
Di Battista, Piero; and Gratani, Francesco, 4,371,695, Cl. 546-190.000.
Gravity Guidance, Incorporated: *See—*
Miller, Jack V., 4,371,494, Cl. 264-522.000.
Gray, Richard T.: *See—*
Gleim, Robert D.; and Gray, Richard T., 4,371,393, Cl. 75-108.000.
Green Cross Corporation, The: *See—*
Uemura, Yahiro; Goto, Takashi; Kano, Yoshiaki; and Funakoshi, Satoshi, 4,371,520, Cl. 424-85.000.
Green & Kellogg, Inc.: *See—*
McCombs, Norman R., 4,371,384, Cl. 55-179.000.
Green, Michael L.: *See—*
Jenkins, John M., III; Carter, Max E., Sr.; Green, Michael L.; and Cavender, Marvin E., 4,371,977, Cl. 378-51.000.
Greene, Richard F.: *See—*
Thomas, Richard E.; Haas, George A.; and Greene, Richard F., 4,371,809, Cl. 313-449.000.
Gregory, George K. E.; Peach, James M.; and Du Mayne, James D., to John Wyeth & Brother Limited. Articles for carrying chemicals. 4,371,516, Cl. 424-22.000.
Gretag Aktiengesellschaft: *See—*
Mast, Fred, 4,371,258, Cl. 355-37.000.
Grice, Donald G.: *See—*
Bresenham, Jack E.; Grice, Donald G.; and Pi, Shing-Chou, 4,371,933, Cl. 364-300.000.
Grimes, Ronald R.: *See—*
Ashton, Larry J.; and Grimes, Ronald R., 4,371,055, Cl. 182-46.000.
Grimmell, William C.; and Kaetzel, Gilbert C., to Hoffmann-La Roche Inc. Multichannel fiber optic light guide for capsule inspection. 4,371,783, Cl. 250-227.000.
Grisar, J. Martin; Schnettler, Richard A.; and Dage, Richard C., to Merrell Dow Pharmaceuticals Inc. 5-Aminomethyl-2,3-dihydro-2-oxo-1H-imidazole-4-carboxylic acid derivatives. 4,371,737, Cl. 544-370.000.
Griscom, David L., to United States of America, Navy. Optical fiber waveguide for measuring magnetic fields. 4,371,838, Cl. 324-244.000.
Gritter, David J., to Eaton Corporation. Base drive and overlap protection circuit. 4,371,824, Cl. 318-722.000.
Grob, Ferdinand: *See—*
Wahl, Josef; Schmidt, Peter-Jurgen; Birmelin, Jorg; Grob, Ferdinand; Kohler, Rolf; Zabler, Erich; Heintz, Frieder; Bremer, Wolfgang; Kopernick, Viktor; Hugel, Robert; Weigl, Andreas; and Baumann, Gunther, 4,371,934, Cl. 364-424.000.
Grodsky, Gerold M.; and Bringer, Jacques, to University of California, The Regents of the. Reducing the aggregation of insulin in solution. 4,371,523, Cl. 424-178.000.
Gross, Hansjurgen: *See—*
Moser, Gottfried; and Gross, Hansjurgen, 4,370,956, Cl. 123-196.0AB.
Grosse, Jurgen, to Hoechst Aktiengesellschaft. Oxidizing phosphorus compounds with chlorosulfonic acid. 4,371,509, Cl. 423-300.000.
Grosser, Vojtech: *See—*
Kadlec, Vlastimil; Grosser, Vojtech; and Rosenthal, Jakub, 4,371,456, Cl. 252-435.000.
Grossman, Harold; Merrill, Richard E.; and Monaghan, Paul B., to Empire Enterprises, Inc. Compositions, processes, and writing elements employing resins of the thermosetting type. 4,371,632, Cl. 523-164.000.
Grossner, Horst; Kaminski, Detlef; and Schwerdt, Paul, to Daimler-Benz Aktiengesellschaft. Ignition distributor for internal combustion engines. 4,370,965, Cl. 123-426.000.
Grove Valve and Regulator Company: *See—*
Combes, Marvin G., 4,370,893, Cl. 73-861.610.
Gruber, Josef: *See—*
Dietrich, Karl-Heinz; Gruber, Josef; Rauffer, Walter; and Nassl, Peter, 4,371,242, Cl. 353-101.000.
Gruber, Klaus: *See—*
Kunz, Wilhelm; and Gruber, Klaus, 4,371,545, Cl. 424-330.000.
Grunert, Hans C.; and Becker, Heinz, to Sybron Corporation. Cabinet door hinge. 4,371,223, Cl. 312-325.000.
GTE Laboratories Incorporated: *See—*
Lempicki, Alexander; and Klein, Richard M., 4,371,965, Cl. 372-40.000.
GTE Products Corporation: *See—*
Broadt, David R.; and Audesse, Emery G., 4,371,913, Cl. 362-17.000.
Broadt, David R.; Armstrong, Donald E.; and Kackenmeister, Carl F., 4,371,914, Cl. 362-15.000.
Broadt, David R.; and Kackenmeister, Carl F., 4,371,915, Cl. 362-15.000.
Guilpain, Bernard; and Tinchant, Xavier, to Clesid S.A. Dome for electric arc furnace. 4,371,970, Cl. 373-74.000.
Gulf Research & Development Company: *See—*
Montagna, John C.; Galli, Robert D.; and Freel, John, 4,371,428, Cl. 203-51.000.
Gulf & Western Manufacturing Company: *See—*
Carrieri, Louis F., 4,370,878, Cl. 72-345.000.
Gurries, Raymond A., to Resonant Technology Company. Sequenced fastener installation system. 4,370,906, Cl. 81-464.000.
Gurtler, Rudolf W., to Mahle GmbH. Compression rings for pistons. 4,371,174, Cl. 277-24.000.
Gusowski, Ronald I.: *See—*
Carberry, Richard A.; Druke, Michael B.; and Gusowski, Ronald I., 4,371,925, Cl. 364-200.000.
Gustafsson, Berth U., to Projectus Industriprodukter AB. Device for gentle treatment of spherical balls. 4,370,772, Cl. 15-97.00R.
Gustafsson, Berth U., to AB Bonnierforetagen. Helical gear machine with improved high pressure port. 4,371,324, Cl. 418-201.000.
Gustavsson, Olle; and Sundmar, Goran, to Aktiebolaget Bofors. Tooth for ramming unit. 4,370,915, Cl. 89-47.000.
Guzik, Andrzej T., to Motorola, Inc. Method of mounting interrelated components. 4,371,912, Cl. 361-417.000.
Haas, George A.: *See—*
Thomas, Richard E.; Haas, George A.; and Greene, Richard F., 4,371,809, Cl. 313-449.000.
Haas, Gerhard J.: *See—*
Fulger, Charles V.; Haas, Gerhard J.; Herman, Edwin B.; and Lazarus, Charles R., 4,371,551, Cl. 426-28.000.
Habel, Erich: *See—*
Bahr, Gunter; Habel, Erich; and Hafner, Werner, 4,371,177, Cl. 277-152.000.
Habib, Robert. Machines for grinding toothed cutting tools. 4,370,834, Cl. 51-165.720.
Hadary, Joseph. Toothbrush. 4,370,773, Cl. 15-172.000.
Hafner, Werner: *See—*
Bahr, Gunter; Habel, Erich; and Hafner, Werner, 4,371,177, Cl. 277-152.000.
Hager, Bror O. Process for the treatment of wood. 4,371,572, Cl. 427-298.000.
Haggar Company: *See—*
Off, Joseph W. A.; Early, Judson H.; Roady, Daniel K.; and Thayer, Theodore B., 4,371,074, Cl. 198-339.000.
Haines, Russell R., to Paco Packaging Incorporated. Childproof package for multiple products. 4,371,080, Cl. 206-531.000.
Hale, Richard A.; and Hennessey, Richard G., to International Harvester Company. Agricultural tractor having reverse air flow cooling. 4,371,047, Cl. 180-54.00A.
Hallet, Peter: *See—*
Collington, Eric W.; Hallet, Peter; Wallis, Christopher J.; and Hayes, Norman F., 4,371,530, Cl. 424-244.000.
Hallford, Ben R., to Rockwell International Corporation. Microwave frequency converter with economical coupling. 4,371,982, Cl. 455-327.000.
Halliburton Company: *See—*
Keeney, Bill R., 4,371,443, Cl. 252-8.55C.
Smith, Harry D., Jr.; and Dodge, Carl, 4,370,886, Cl. 73-153.000.
Halliburton, Ronald D., to Bally Manufacturing Corporation. Projected gaming method and apparatus. 4,371,164, Cl. 273-121.00A.
Hallmann, Melvin H.: *See—*
Peng, Yuchi P.; Huntzinger, Gerald O.; and Hallmann, Melvin H., 4,371,804, Cl. 310-321.000.
Hamada, Kaduto; Takata, Zitumi; and Numata, Katuhisa, to Toyoboseki Kabushiki Kaisha. Process for the production of a hollow fiber semipermeable membrane. 4,371,487, Cl. 264-49.000.
Hamilton-Pax, Inc.: *See—*
Laue, Charles E., 4,371,358, Cl. 464-136.000.
Hamilton, William H., to Boeing Company, The. RF Shielded door seal. 4,370,831, Cl. 49-477.000.
Hamprecht, Gerhard: *See—*
Acker, Rolf-Dieter; Koenig, Karl-Heinz; Hamprecht, Gerhard; and Pommer, Ernst-Heinrich, 4,371,525, Cl. 424-184.000.
Handke, Gunther; and Hepp, Hans, to Fichtel & Sachs AG. Shackle assembly for motor vehicle compression struts. 4,371,280, Cl. 403-13.000.
Hannas, James R., to Silent Running Corporation. Infrared transmitter and control circuit. 4,371,814, Cl. 318-16.000.
Hanselmann, Dieter: *See—*
Bienert, Herbert; Hanselmann, Dieter; Kohler, Alfred; and Prohaska, Hans, 4,370,774, Cl. 15-250.200.
Hansen, Kenneth N., to Allis-Chalmers Corporation. Latch for side panel of engine hood. 4,371,048, Cl. 180-69.00R.

Hara, Shuichi: *See—*
Takeuchi, Osamu; Kokubun, Haruo; Yoshinaga, Hisashi; Hara, Shuichi; and Ban, Hiromichi, 4,371,149, Cl. 266-90.000.
Harada, Fumio: *See—*
Murayama, Akira; Harada, Fumio; Arata, Tetsuya; Itagaki, Masato; Nakayama, Susumu; and Sofue, Masahisa, 4,371,319, Cl. 417-312.000.
Harada, Kunihiro: *See—*
Matsumoto, Shuichi; Yasuda, Kenji; Endoh, Masayuki; and Harada, Kunihiro, 4,371,713, Cl. 568-614.000.
Harada, Masashi: *See—*
Leistner, William E.; Minagawa, Motonobu; Tsuruga, Kouji; and Harada, Masashi, 4,371,651, Cl. 524-178.000.
Harada, Tsutomu: *See—*
Yoshimoto, Takeshi; Hiraoka, Hideki; Okazaki, Seiji; Taniguchi, Yoshihiro; and Harada, Tsutomu, 4,371,260, Cl. 355-77.000.
Harase, Jiro; Takashima, Kunihide; and Nakashima, Shozaburo, to Nippon Steel Corporation. Process for producing grain-oriented silicon steel strip. 4,371,405, Cl. 148-111.000.
Harbert, Charles A.: *See—*
Lombardino, Joseph G.; and Harbert, Charles A., 4,371,696, Cl. 546-283.000.
Harbison, Charles H. Apparatus for forming structures in the form of segments of a sphere. 4,371,325, Cl. 425-63.000.
Harden, Richard L. Pivotal connection for enclosure sections. 4,371,148, Cl. 256-26.000.
Harke, Hans-Peter: *See—*
Munzenmaier, Wolfgang; Eggensperger, Heinz; Ehlers, Helmut H.; Beilfuss, Wolfgang; Bucklers, Lothar; and Harke, Hans-Peter, 4,371,547, Cl. 424-333.000.
Harmsen, Siegfried: *See—*
Burgbacher, Martin; Harmsen, Siegfried; and Papst, Georg, 4,371,313, Cl. 415-215.000.
Harrington, Charles D.: *See—*
Leaders, William M.; and Harrington, Charles D., 4,371,504, Cl. 423-10.000.
Hart, Robert J., to Commercial Resins Company. System for spraying powder. 4,371,295, Cl. 406-128.000.
Hartig, Wolfgang: *See—*
Oberstrass, Detley; Hartig, Wolfgang; and Weber, Klaus, 4,370,852, Cl. 57-340.000.
Hartman, Adrian R.; MacRae, Alfred U.; and Shackle, Peter W., to Bell Telephone Laboratories, Incorporated. High voltage dielectrically isolated dual gate solid-state switch. 4,371,886, Cl. 357-38.000.
Hartman, Adrian R.; Riley, Terence J.; and Shackle, Peter W., to Bell Telephone Laboratories, Incorporated. High voltage solid-state switch. 4,371,887, Cl. 357-38.000.
Hartmann, Kurt: *See—*
Bohg, Armin; and Hartmann, Kurt, 4,371,857, Cl. 335-259.000.
Hartz, Helmut. Torsional oscillation damper for combustion-engine crankshaft. 4,370,900, Cl. 74-574.000.
Hartzell, Richard P. Exercising device. 4,371,162, Cl. 272-134.000.
Harwood, Leopold A.: *See—*
Shanley, Robert L., II; and Harwood, Leopold A., 4,371,896, Cl. 358-172.000.
Hasegawa, Kazumasa; Ito, Minao; Sugiura, Saburo; Yamano, Kiyoichi; and Hayakawa, Shizunori, to Daido Tokishuko Kabushiki Kaisha. Process for refining a molten metal. 4,371,392, Cl. 75-10.00R.
Hasegawa, Shumpei: *See—*
Otsuka, Kazuo; Narasaka, Shin; and Hasegawa, Shumpei, 4,371,822, Cl. 318-696.000.
Hashimoto, Mitsuyoshi, to Toshiba Silicones, Ltd. Room temperature curable polyorganosiloxane composition and method. 4,371,682, Cl. 528-34.000.
Hashimoto, Naoki: *See—*
Nagashima, Yoshiaki; Kimura, Yoshiomi; and Hashimoto, Naoki, 4,371,550, Cl. 426-16.000.
Hattori, Fukutaro, to Isowa Industry Co., Ltd. Printing press for printing sheets of corrugated paperboard. 4,370,926, Cl. 101-207.000.
Haussler, Wilhelm. Method for production of a compression-proof shelter and prefabricated means for use in this method. 4,370,934, Cl. 109-1.00S.
Havenith, Cornelis: *See—*
Pischinger, Franz; and Havenith, Cornelis, 4,370,958, Cl. 123-276.000.
Hawkins, A. Hubert: *See—*
Frias, Robert; Minnis, C. W.; Hawkins, A. Hubert; and Davis, Wendell, 4,371,302, Cl. 414-22.000.
Hay, Louis E.: *See—*
Mercer, Roger W.; and Hay, Louis E., 4,371,338, Cl. 433-60.000.
Hayakawa, Shizunori: *See—*
Hasegawa, Kazumasa; Ito, Minao; Sugiura, Saburo; Yamano, Kiyoichi; and Hayakawa, Shizunori, 4,371,392, Cl. 75-10.00R.
Hayashi, Moriyoshi, to Yoshida Kogyo K.K. Connector assembly. 4,370,841, Cl. 52-464.000.
Hayes, Norman F.: *See—*
Collington, Eric W.; Hallet, Peter; Wallis, Christopher J.; and Hayes, Norman F., 4,371,530, Cl. 424-244.000.
Hecht, Randy I., to Genex Corporation. Method for purification of anterior pituitary hormones. 4,371,462, Cl. 260-112.00R.
Heckman, Richard W.: *See—*
Shaffer, Robert L.; and Heckman, Richard W., 4,371,163, Cl. 273-54.00B.
Heffernan, Peter C., to W. R. Grace & Co. Adjustable screed bar apparatus. 4,371,330, Cl. 425-458.000.
Heibel, Helmut, to Lucas Industries Limited. Hydraulic systems. 4,371,317, Cl. 417-298.000.
Heidt, Frederick W.: *See—*
Bien, Alfred A.; and Heidt, Frederick W., 4,370,794, Cl. 29-509.000.
Heigwer, Gerhard: *See—*
Gebhart, Josef; Heigwer, Gerhard; Heyder, Joachim; and Stahlhofen, Willi, 4,370,986, Cl. 128-716.000.
Heil, John, to Allcraft Plastic Company, Inc. Portable attachment for sinks. 4,370,762, Cl. 4-206.000.
Heinrich Mack Nachf. Chem-Parm. Fabrik: *See—*
Stoss, Peter, 4,371,703, Cl. 549-464.000.
Heintz, Frieder: *See—*
Wahl, Josef; Schmidt, Peter-Jurgen; Birmelin, Jorg; Grob, Ferdinand; Kohler, Rolf; Zabler, Erich; Heintz, Frieder; Bremer, Wolfgang; Kopernick, Viktor; Hugel, Robert; Weigl, Andreas; and Baumann, Gunther, 4,371,934, Cl. 364-424.000.
Heinz Faigle KG: *See—*
Faigle, Heinz, 4,371,445, Cl. 252-12.000.
Heise, Friedrich: *See—*
Engels, Bernd; Heise, Friedrich; and Cremer, Heinz P., 4,371,065, Cl. 192-8.00C.
Heisterberg, Milton W.: *See—*
Ogarek, Bernard C.; and Heisterberg, Milton W., 4,371,090, Cl. 220-224.000.
Helshoj, Egon, to Effex Innovation A/S. Heat storage device. 4,371,028, Cl. 165-10.000.
Henden, Derek J.; and Morris, Stuart R. Bike trailer. 4,371,184, Cl. 280-204.000.
Henderson & Sturm: *See—*
Dauel, Darold R.; Kiesling, Clarence R.; and May, Jerry L., 4,371,314, Cl. 416-20.00A.
Henkel Kommanditgesellschaft Auf Aktien: *See—*
Christophliemk, Peter; Wust, Willi; and Carduck, Franz-Josef, 4,371,510, Cl. 423-329.000.
Rose, David; Moller, Hinrich; and Maak, Norbert, 4,371,370, Cl. 8-408.000.
Hennessey, Richard G.: *See—*
Hale, Richard A.; and Hennessey, Richard G., 4,371,047, Cl. 180-54.00A.
Henriques, Joseph; and Bennett, Robert A. Rotating barbecue grill. 4,370,920, Cl. 99-339.000.
Henry, John W., IV; and Cassel, David E., to United States of America, Navy. Centrifugal pump recirculation diffuser. 4,371,310, Cl. 415-211.000.
Henson, Loyal E.: *See—*
Holler, Raymond E.; and Henson, Loyal E., 4,371,427, Cl. 203-3.000.
Henthorne, Michael; Yinger, Robert J.; and DeBold, Terry A., to Carpenter Technology Corporation. Corrosion resistant austenitic alloy. 4,371,394, Cl. 75-128.00A.
Hentz, Donald A., to Aurora Industries, Inc. Method of upgrading crude sodium bentonite. 4,371,626, Cl. 501-145.000.
Hepp, Hans: *See—*
Handke, Gunther; and Hepp, Hans, 4,371,280, Cl. 403-13.000.
Hercules Incorporated: *See—*
Cartwright, Richard V.; and Lees, Ronald D., 4,371,409, Cl. 149-94.000.
Herion-Werke KG: *See—*
Ott, Helmut, 4,371,178, Cl. 277-154.000.
Herman, Edwin B.: *See—*
Fulger, Charles V.; Haas, Gerhard J.; Herman, Edwin B.; and Lazarus, Charles R., 4,371,551, Cl. 426-28.000.
Hermann, Claus; and Krings, Helmut, to Lingner and Fischer GmbH. Detergent-oil bath additives. 4,371,548, Cl. 424-365.000.
Herndier, Arnold W.: *See—*
Barnes, Derek; Churchland, Mark T.; Herndier, Arnold W.; Schilling, Walter W.; and Welsh, James K., 4,371,020, Cl. 144-366.000.
Herrmann, Klaus M.: *See—*
Anderson, David M.; Herrmann, Klaus M.; and Somerville, Ronald L., 4,371,614, Cl. 435-108.000.
Hertel, Otto; Scharf, Emil; Melzer, Jaroslav; and Fikentscher, Rolf. Water soluble crosslinked ethyleneimine grafted polyamidoamine. 4,371,674, Cl. 525-435.000.
Herwig, Jens; Schleppinghoff, Bernhard; and Scheef, Hans-Volker, to EC Erdolchemie GmbH. Process for the preparation of tertiary olefins and n-alkanols. 4,371,725, Cl. 568-907.000.
Herzig, Ralph B.; and Cohen, Howard G. Cushion utilizing air and liquid. 4,370,769, Cl. 5-452.000.
Hetland, Timothy A.: *See—*
Ballarini, John A.; and Hetland, Timothy A., 4,371,430, Cl. 204-32.00R.
Hettinger, William P., Jr. Methods of treating cellular tissue. 4,371,519, Cl. 424-81.000.
Hewelt, Robert K.; and Dohring, Edward F., to Hewelt, Robert K. Arrangement for eliminating ammonia vapors from developed diazo copy material. 4,371,247, Cl. 354-300.000.
Heyder, Joachim: *See—*
Gebhart, Josef; Heigwer, Gerhard; Heyder, Joachim; and Stahlhofen, Willi, 4,370,986, Cl. 128-716.000.
Hibino, Takashi; and Ito, Yoshinori, to Hoshizaki Electric Co., Ltd. Ice-making and fresh water dispensing apparatus. 4,370,865, Cl. 62-124.000.
Hidassy, Laszlo, to Thomas & Betts Corporation. Bundling tie applying tool. 4,371,010, Cl. 140-93.00A.
Hidassy, Laszlo, to Thomas & Betts Corporation. Rotary tie carrier in a bundling tie applying tool. 4,371,011, Cl. 140-93.200.

Higashigawa, Keizo: *See*—
Shinoda, Kazuo; Higashigawa, Keizo; and Shiozawa, Ken, 4,371,000, Cl. 137-434.000.
Hilbert, Francis H., to Motorola, Inc. AM Stereophonic decoder. 4,371,747, Cl. 179-1.0GS.
Hilken, Mark A. Tropical fish egg incubator. 4,370,947, Cl. 119-3.000.
Hill, Randolph J.: *See*—
Frick, Richard H.; Hill, Randolph J.; and Roland, David R., 4,371,417, Cl. 156-495.000.
Hilleman, Terry B. Orthodontic positioner. 4,371,336, Cl. 433-6.000.
Hilligoss, Lawrence O.: *See*—
Hilligoss, William R., Jr.; and Hilligoss, Lawrence O., 4,371,751, Cl. 179-5.00R.
Hilligoss, William R., Jr.; and Hilligoss, Lawrence O., to Newart Electronic Sciences, Inc. Automatic telephonic user emergency message transmitting apparatus. 4,371,751, Cl. 179-5.00R.
Hills Industrie Limited: *See*—
Jones, Adrian D., 4,371,053, Cl. 181-249.000.
Himsley Engineering Limited: *See*—
Byleveld, Eduard, 4,371,506, Cl. 423-24.000.
Hino, Minoru; and Oshima, Takao, to Sumitomo Chemical Company, Limited; and Tohto Kasei Co., Ltd. Modified epoxy resin composition. 4,371,665, Cl. 525-109.000.
Hinokiyama, Minoru: *See*—
Nozawa, Takamitsu; Kishi, Takao; and Hinokiyama, Minoru, 4,371,098, Cl. 222-321.000.
Hiramatsu, Tsunenosuke: *See*—
Kashiwase, Kohji; Machino, Yasuo; Mita, Muneo; Hiramatsu, Tsunenosuke; Morishita, Toshihiko; and Taniguchi, Mitsuo, 4,371,656, Cl. 524-443.000.
Hiramatsu, Yasuzo: *See*—
Fujimura, Hajime; Hiramatsu, Yasuzo; Yabuuchi, Takahiro; Hisaki, Masakatu; Takikawa, Katsuo; Honna, Takaji; Miyake, Hidekazu; and Kajitani, Makoto, 4,371,544, Cl. 424-322.000.
Hirano, Hitoshi: *See*—
Fukuda, Tsuguo; and Hirano, Hitoshi, 4,371,419, Cl. 156-617.0SP.
Hiraoka, Hideki: *See*—
Yoshimoto, Takeshi; Hiraoka, Hideki; Okazaki, Seiji; Taniguchi, Yoshihiro; and Harada, Tsutomu, 4,371,260, Cl. 355-77.000.
Hirokawa, Kazuo: *See*—
Ohsaki, Kozo; Hirokawa, Kazuo; Fukuda, Goro; Otsuka, Kozi; and Tomita, Tadayoshi, 4,371,452, Cl. 252-373.000.
Hirose Electric Co., Ltd.: *See*—
Yosimura, Yosikazu, 4,371,227, Cl. 339-211.000.
Hirose, Noboru, to Brother Kogyo Kabushiki Kaisha. Machine tool. 4,371,297, Cl. 408-130.000.
Hirose, Yoshiteru: *See*—
Sato, Minoru; Hirose, Yoshiteru; and Toyoshima, Shigeshi, 4,371,577, Cl. 428-96.000.
Hisaka Works, Limited: *See*—
Yamada, Ken'ichi; Sumitomo, Hiroyuki; Horiguchi, Akira; and Masutani, Kenzo, 4,371,034, Cl. 165-108.000.
Hisaki, Masakatu: *See*—
Fujimura, Hajime; Hiramatsu, Yasuzo; Yabuuchi, Takahiro; Hisaki, Masakatu; Takikawa, Katsuo; Honna, Takaji; Miyake, Hidekazu; and Kajitani, Makoto, 4,371,544, Cl. 424-322.000.
Hisatsugu, Kaji; and Watanabe, Kazuhiro, to Kureha Kagaku Kogyo Kabushiki Kaisha. Process for preparing spherical carbon material and spherical activated carbon. 4,371,454, Cl. 252-422.000.
Hitachi Cable, Ltd.: *See*—
Ando, Toshinari; Nishi, Masataka; Shimamoto, Susumu; Yoshida, Hiromichi; Suzumura, Takashi; Kakizaki, Kimio; Yamagishi, Ryozo; and Ogata, Hisanao, 4,371,741, Cl. 174-15.00S.
Hitachi, Ltd.: *See*—
Kanamaru, Hisanobu; Okabe, Moisei; Tatsumi, Hideo; and Tohkairin, Akira, 4,370,793, Cl. 29-446.000.
Kano, Takashi, 4,371,909, Cl. 361-91.000.
Kanoi, Minoru; and Hori, Yasuro, 4,371,858, Cl. 336-100.000.
Murayama, Akira; Harada, Fumio; Arata, Tetsuya; Itagaki, Masato; Nakayama, Susumu; and Sofue, Masahisa, 4,371,319, Cl. 417-312.000.
Sakamoto, Masakatsu, 4,371,294, Cl. 406-109.000.
Hobbs, James W.: *See*—
DiBiano, Robert J.; and Hobbs, James W., 4,371,426, Cl. 203-2.000.
Hochhauser, Arthur; and Jackson, Richard B., to DCA Food Industries. Seafood product and method of producing same. 4,371,560, Cl. 426-643.000.
Hockett, Wayne B. Universal abrasive cleaning apparatus. 4,370,836, Cl. 51-410.000.
Hoeberechts, Arthur M. E.: *See*—
van Gorkom, Gerardus G. P.; and Hoeberechts, Arthur M. E., 4,370,797, Cl. 29-569.00R.
Hoechst Aktiengesellschaft: *See*—
Beck, Gerhard; Knolle, Jochen; Rupp, Richard H.; and Scholkens, Bernward, 4,371,542, Cl. 424-274.000.
Donges, Reinhard, 4,371,606, Cl. 430-281.000.
Donges, Reinhard, 4,371,607, Cl. 430-281.000.
Grosse, Jurgen, 4,371,509, Cl. 423-300.000.
Knoblauch, Wolfgang; and von Werner, Konrad, 4,371,448, Cl. 252-78.100.
Koblo, Jochen; and Schuck, Stephan, 4,371,321, Cl. 418-45.000.
Lind, Erwin; and Bader, Ilse, 4,371,599, Cl. 430-49.000.
May, Adolf; Voetz, Franz J.; and Gerl, August, 4,371,399, Cl. 106-109.000.
Hoene, Richard, to BASF Aktiengesellschaft. Preparation of cyclopentadiene/acetylenically unsaturated compound copolymers. 4,371,676, Cl. 526-76.000.
Hoffert, Robert S.: *See*—
Moyer, James D.; and Hoffert, Robert S., 4,370,936, Cl. 112-10.000.
Hoffman, Dietrich; and Sliwka, Wolfgang, to BASF Aktiengesellschaft. Microcapsule-containing wax composition. 4,371,634, Cl. 523-208.000.
Hoffmann, Carl J.: *See*—
Andrews, Michael W.; and Hoffmann, Carl J., 4,371,919, Cl. 363-65.000.
Hoffmann-La Roche Inc.: *See*—
Grimmell, William C.; and Kaetzel, Gilbert C., 4,371,783, Cl. 250-227.000.
Walser, Armin; and Fryer, Rodney I., 4,371,468, Cl. 260-239.0BD.
Hofmeister, Helmut; Petzoldt, Karl; Annen, Klaus; Laurent, Henry; Wiechert, Rudolf; and Steinbeck, Hermann, to Schering, Aktiengesellschaft. 11-Methylene-Δ^{15}-steroids, their preparation and use in pharmaceuticals. 4,371,529, Cl. 424-243.000.
Hohn, Richard; Jung, Werner; Winter, Gerhard; and Woerner, Siegfried, to Robert Bosch, GmbH. Metalized recording carrier for recording instruments, and method of its manufacture. 4,371,879, Cl. 346-135.100.
Holce, Thomas J.; and Huckins, Charles M., to Sentrol, Inc. Switch assembly including circuit test points. 4,371,856, Cl. 335-202.000.
Holland, Dennis P. Water ski tow handle. 4,371,352, Cl. 441-69.000.
Holler, Herbert: *See*—
Muhlbauer, Gerhard; and Holler, Herbert, 4,371,100, Cl. 222-591.000.
Holler, Raymond E.; and Henson, Loyal E., to Phillips Petroleum Company. Extractive distillation. 4,371,427, Cl. 203-3.000.
Holley, Joe W. Spring motor. 4,371,058, Cl. 185-11.000.
Holman, James O.: *See*—
Abdelrahman, Mona; Fuchs, Ralph W.; Holman, James O.; Johnson, Robert G.; and Scott, M. Walter, 4,371,861, Cl. 338-25.000.
Holmes, David D., to RCA Corporation. Television ghost detector system. 4,371,266, Cl. 358-167.000.
Holtkamp, Bernd: *See*—
Eckert, Wolfgang; Holtkamp, Bernd; and Kilian, Ernst A., 4,371,841, Cl. 330-51.000.
Holtschmidt, Ulrich: *See*—
Fock, Jurgen; Schedlitzki, Dietmar; Holtschmidt, Ulrich; and Ahrens, Wilhelm, 4,371,683, Cl. 528-60.000.
Holub, Fred F.: *See*—
Betts, Joseph E.; and Holub, Fred F., 4,371,653, Cl. 524-268.000.
Homecrest Industries Incorporated: *See*—
Bottemiller, Donald L.; and Miles, John K., 4,371,142, Cl. 248-573.000.
Honda Giken Kogyo Kabushiki Kaisha: *See*—
Iwasaki, Hiroyuki; and Kasahara, Kiyoshi, 4,371,437, Cl. 210-94.000.
Ohkubo, Kiyokazu, 4,371,062, Cl. 192-3.610.
Honda Motor Co., Ltd.: *See*—
Otsuka, Kazuo; Narasaka, Shin; and Hasegawa, Shumpei, 4,371,822, Cl. 318-696.000.
Honda, Toshio; Fukuura, Yukio; Ishikawa, Hikaru; Kojima, Shozo; Tanuma, Itsuo; and Ogawa, Masao, to Bridgestone Tire Company Limited. Method of adhering unvulcanized rubber to vulcanized rubber through vulcanization. 4,371,411, Cl. 156-281.000.
Honeywell Inc.: *See*—
Abdelrahman, Mona; Fuchs, Ralph W.; Holman, James O.; Johnson, Robert G.; and Scott, M. Walter, 4,371,861, Cl. 338-25.000.
Klement, Stefan H., 4,371,850, Cl. 332-11.00D.
Shah, Prabodh L., 4,371,901, Cl. 360-65.000.
Honeywell Information Systems Inc.: *See*—
Barlow, George J.; Stanley, Philip E.; and Brown, Richard P., 4,371,928, Cl. 364-200.000.
Wilhite, John E.; Shelly, William A.; and Ryan, Charles P., 4,371,927, Cl. 364-200.000.
Honma, Hideo; Ikari, Kunihiro; Sasaki, Osamu; Sasabe, Toshiki; Takeda, Kasuhiro; and Takamura, Tsutomu, to Tokyo Shibaura Denki Kabushiki Kaisha. Chemical copper-plating bath. 4,371,397, Cl. 106-1.230.
Honna, Takaji: *See*—
Fujimura, Hajime; Hiramatsu, Yasuzo; Yabuuchi, Takahiro; Hisaki, Masakatu; Takikawa, Katsuo; Honna, Takaji; Miyake, Hidekazu; and Kajitani, Makoto, 4,371,544, Cl. 424-322.000.
Hoover Universal, Inc.: *See*—
Kitchen, John P.; and Mandusky, Jack C., 4,371,152, Cl. 267-103.000.
Hopkins, Walter: *See*—
Cherukuri, Subraman R.; Friello, Dominick R.; Parker, Ellery; Hopkins, Walter; and Mackay, Donald A. M., 4,371,549, Cl. 426-3.000.
Hopper, Chester S.: *See*—
Case, Edward M.; and Hopper, Chester S., 4,371,180, Cl. 277-230.000.
Hoppner, Klaus: *See*—
Schurr, Volker; Nickel, Hans; Hoppner, Klaus; Kohler, Gisbert; Weiss, Hermann; and Wieland, Dieter, 4,370,810, Cl. 30-382.000.
Hori, Yasuro: *See*—
Kanoi, Minoru; and Hori, Yasuro, 4,371,858, Cl. 336-100.000.
Horiguchi, Akira: *See*—
Yamada, Ken'ichi; Sumitomo, Hiroyuki; Horiguchi, Akira; and Masutani, Kenzo, 4,371,034, Cl. 165-108.000.

Horita, Yoshiharu; Fujimoto, Kenichi; Hoshino, Michio; Takito, Tetsuo; and Muraki, Masayoshi, to Nippon Steel Chemical Co., Ltd.; and Mitsubishi Oil Co., Ltd. Composition suitable for mechanical power transmission and process for operating traction drives. 4,371,726, Cl. 585-3.000.
Hosaka, Akio, to Nissan Motor Company, Ltd. System for producing a pulse signal for controlling an internal combustion engine. 4,370,962, Cl. 123-416.000.
Hoshino, Michio: *See*—
Horita, Yoshiharu; Fujimoto, Kenichi; Hoshino, Michio; Takito, Tetsuo; and Muraki, Masayoshi, 4,371,726, Cl. 585-3.000.
Hoshizaki Electric Co., Ltd.: *See*—
Hibino, Takashi; and Ito, Yoshinori, 4,370,865, Cl. 62-124.000.
Hosiden Electronics Co., Ltd.: *See*—
Sorimachi, Mitsuo, 4,371,859, Cl. 337-365.000.
Hostert, Richard J.; Mathiasmeier, Michael J.; and Gilbert, Robert J., to Iowa State University Research Foundation, Inc. Bicycle rack. 4,371,082, Cl. 211-22.000.
Hoveland, William C.: *See*—
Baxter, Duane W.; Evjen, Joseph L., Jr.; Hoveland, William C.; Roble, Roy A.; Smith, Donald R.; and Wirz, John H., 4,371,902, Cl. 360-75.000.
Howe, Robert K.; and Lee, Len F., to Monsanto Company. 2-Chloro-4,5-disubstituted-thiazoles useful as herbicidal safeners. 4,371,389, Cl. 71-90.000.
Howitt, George L., to Charles Beseler Company. Digital color printer system. 4,371,259, Cl. 355-38.000.
Huber, William D., to Memorex Corporation. Equalization of DC null in reproducing a high density recording. 4,371,900, Cl. 360-40.000.
Huckins, Charles M.: *See*—
Holce, Thomas J.; and Huckins, Charles M., 4,371,856, Cl. 335-202.000.
Hugel, Robert: *See*—
Wahl, Josef; Schmidt, Peter-Jurgen; Birmelin, Jorg; Grob, Ferdinand; Kohler, Rolf; Zabler, Erich; Heintz, Frieder; Bremer, Wolfgang; Kopernick, Viktor; Hugel, Robert; Weigl, Andreas; and Baumann, Gunther, 4,371,934, Cl. 364-424.000.
Hughes Aircraft Company: *See*—
Parrish, William J.; and Gates, James L., 4,371,885, Cl. 357-24.000.
Peters, John W., 4,371,587, Cl. 428-446.000.
Pitzalis, Octavius, Jr., 4,371,845, Cl. 330-277.000.
Huibers, Derk T. A., to Hydrocarbon Research, Inc. Process for producing L-sugars. 4,371,616, Cl. 435-105.000.
Hull, Maury L., to University of California. Method for programmed release in ski bindings. 4,371,188, Cl. 280-613.000.
Humberstone, Kenneth J.: *See*—
Freeman, Timothy J.; Goler, William J.; and Humberstone, Kenneth J., 4,371,202, Cl. 294-82.00R.
Hume, Peter J. Life jackets. 4,371,353, Cl. 441-117.000.
Hunt, Roger W.; Miller, Brian T.; and Schroeder, Donald R., to CTS Corporation. Pallet, process and apparatus for producing crystal oscillators. 4,371,078, Cl. 206-329.000.
Hunt, Ronald E.; and Jenkins, William M., to International Business Machines Corporation. Compact envelope handling device. 4,371,157, Cl. 271-2.000.
Huntzinger, Gerald O.: *See*—
Peng, Yuchi P.; Huntzinger, Gerald O.; and Hallmann, Melvin H., 4,371,804, Cl. 310-321.000.
Huser, Guido, to BBC Brown, Boveri & Company Limited. Puffer interrupter with two-piece interrupter contact. 4,371,766, Cl. 200-148.00A.
Husqvarna Aktiebolag: *See*—
Bergvall, Bengt A., 4,370,938, Cl. 112-158.00E.
Huth, Andreas: *See*—
Braestrup, Claus T.; Nielsen, Mogens C.; Christensen, Joergen A.; Engelstoft, Mogens; Schou, Henning; Eder, Ulrich; Neef, Gunter; Huth, Andreas; Rahtz, Dieter; and Schmiechen, Ralph, 4,371,536, Cl. 424-256.000.
Hutson, Thomas, Jr., to Phillips Petroleum Company. Using butenes to fractionate methanol from methyl-tertiary-butyl ether. 4,371,718, Cl. 568-697.000.
Hutter, Charles G., III, to Products Research & Chemical Corporation. Barrier two part pairing and dispensing cartridge. 4,371,094, Cl. 222-1.000.
Hy-Reel Machinery, Inc.: *See*—
Ridgway, Lance D., 4,371,147, Cl. 254-326.000.
Hyatt, Gilbert P. Computer system architecture. 4,371,923, Cl. 364-200.000.
Hyatt, Gilbert P. Analog read only memory. 4,371,953, Cl. 365-103.000.
Hydrocarbon Research, Inc.: *See*—
Huibers, Derk T. A., 4,371,616, Cl. 435-105.000.
Hylemon, Phillip B.: *See*—
Mosbach, Erwin H.; McSherry, Charles K.; and Hylemon, Phillip B., 4,371,528, Cl. 424-241.000.
I.S.C. Smelting Limited: *See*—
Gammon, Michael W.; and Clarke, John A., 4,371,151, Cl. 266-186.000.
IAO Industrie Riunite S.p.A.: *See*—
De Martino, Ennio, 4,371,916, Cl. 362-31.000.
Ibrahim, Fayez F., to Tyler Refrigeration Corporation. Open top refrigerated display case with ambient air defrost. 4,370,867, Cl. 62-256.000.
Ichikawa Iron Works Co., Ltd.: *See*—
Ichikawa, Michihiro, 4,371,218, Cl. 308-10.000.
Ichikawa, Michihiro, to Ichikawa Iron Works Co., Ltd. Bearing mechanism. 4,371,218, Cl. 308-10.000.
Idemitsu Petrochemical Co., Ltd.: *See*—
Tone, Fumihiro; and Fujishima, Toshihiko, 4,371,662, Cl. 525-89.000.
Igarashi, Junichi: *See*—
Iwasaki, Hidenori; Igarashi, Junichi; and Kasukawa, Shunichi, 4,371,602, Cl. 430-175.000.
Iglesias Hernandez, Eduardo. Process for binding aggregates with a vacuum-activated catalyst. 4,371,649, Cl. 523-145.000.
IIT Research Institute: *See*—
Camras, Marvin, 4,371,894, Cl. 358-342.000.
Ikari, Kunihiro: *See*—
Honma, Hideo; Ikari, Kunihiro; Sasaki, Osamu; Sasabe, Toshiki; Takeda, Kasuhiro; and Takamura, Tsutomu, 4,371,397, Cl. 106-1.230.
Ikeda, Hiroharu; and Shimozato, Yasuyuki, to Japan Synthetic Rubber Co., Ltd. Rubber compound capable of giving a vulcanized rubber having a high modulus of elasticity. 4,371,668, Cl. 525-133.000.
Ikeda, Hironosuke; Narukawa, Satoshi; and Nakaido, Shigehiro, to Sanyo Electric Co., Ltd. Layer-built cell. 4,371,597, Cl. 429-153.000.
Ikeda, Nobuo: *See*—
Yoshimura, Hirofumi; Tanaka, Junzo; and Ikeda, Nobuo, 4,371,769, Cl. 219-10.55F.
Ikeguchi, Nobuyuki: *See*—
Gaku, Morio; and Ikeguchi, Nobuyuki, 4,371,689, Cl. 528-162.000.
Ikeura, Kenji, to Nissan Motor Company, Limited. Fuel-cut control apparatus. 4,371,050, Cl. 180-271.000.
Ikkatai, Mitsuo: *See*—
Fujioka, Kazuyoshi; and Ikkatai, Mitsuo, 4,371,066, Cl. 192-85.0AA.
Ikubo, Hiroyuki; and Wada, Kunihiko, to Fujitsu Limited. Method of providing gettering sites through electrode windows. 4,371,403, Cl. 148-1.500.
Illger, Hans-Walter: *See*—
Konig, Klaus; Illger, Hans-Walter; Seifert, Peter; and Meyborg, Holger, 4,371,630, Cl. 521-173.000.
Imaizumi, Hiroo, to Colpo Company, Ltd. Dowell pin and method of making dental models. 4,371,340, Cl. 433-74.000.
Immink, Kornelis A.: *See*—
Dijkmans, Eise C.; and Immink, Kornelis A., 4,371,748, Cl. 179-1.00J.
Imperial Chemical Industries Limited: *See*—
Aitken, Robert M., 4,371,368, Cl. 493-298.000.
Cairns, John F., 4,371,564, Cl. 427-35.000.
McGrail, Patrick T., 4,371,489, Cl. 264-129.000.
Inagaki, Junichi: *See*—
Yamaura, Mitsuru; Kondow, Ryotaro; Inagaki, Junichi; and Okamoto, Eiichi, 4,371,926, Cl. 364-200.000.
Industrie Pirelli S.p.A.: *See*—
Borca, Bruno; and Ruscelli, Emilio, 4,371,288, Cl. 405-53.000.
Cicognani, Mario; Tangorra, Giorgio; and Cimatti, Gianfranco, 4,371,363, Cl. 474-205.000.
Ing. C. Olivetti & C., S.p.A.: *See*—
Albrile, Walter, 4,371,275, Cl. 400-161.300.
Ingram Corporation: *See*—
Frias, Robert; Minnis, C. W.; Hawkins, A. Hubert; and Davis, Wendell, 4,371,302, Cl. 414-22.000.
Ingram, Robert E. Apparatus for depositing and spreading ballast. 4,370,819, Cl. 37-104.000.
Inoue, Nori, to Tokai Electric Wire Company Limited. Electric connector. 4,371,230, Cl. 339-242.000.
Inst. Nat'l de la Sante et Recherche: *See*—
Tiollais, Pierre, 4,371,625, Cl. 435-317.000.
Institut Francais du Petrole: *See*—
Arnaudeau, Marcel, 4,371,037, Cl. 166-366.000.
Chauvin, Yves; Commereuc, Dominique; and Sugier, Andre, 4,371,627, Cl. 518-700.000.
Institut National de la Recherche Agronomique - UNRA: *See*—
Voegele, Jean D.; Jourdheuil, Pierre E. J.; Pizzol nee Dalmasso, Jeannine M.; and Pintureau, Bernard C. J., 4,370,946, Cl. 119-1.000.
Institut Pasteur: *See*—
Tiollais, Pierre, 4,371,625, Cl. 435-317.000.
International Business Machines Corporation: *See*—
Baise, Arnold I.; Burns, John M.; and Sachdev, Harbans S., 4,371,565, Cl. 427-41.000.
Baxter, Duane W.; Evjen, Joseph L., Jr.; Hoveland, William C.; Roble, Roy A.; Smith, Donald R.; and Wirz, John H., 4,371,902, Cl. 360-75.000.
Bohg, Armin; and Hartmann, Kurt, 4,371,857, Cl. 335-259.000.
Brann, John J.; Freer, Charles S., Jr.; and Jensen, Warren W., 4,371,929, Cl. 364-200.000.
Bresenham, Jack E.; Grice, Donald G.; and Pi, Shing-Chou, 4,371,933, Cl. 364-300.000.
Dinwiddie, John M., Jr.; Freeman, Bobby J.; Jackson, Timothy; and Zipoy, William L., 4,371,932, Cl. 364-200.000.
Hunt, Ronald E.; and Jenkins, William M., 4,371,157, Cl. 271-2.000.
Kendall, Arthur H.; Mitchell, Joseph W.; and Sambucetti, Carlos J., 4,371,273, Cl. 400-119.000.
International Combusion Australia Limited: *See*—
Brander, James E., 4,371,800, Cl. 310-15.000.
International Flavors & Fragrances Inc.: *See*—
Kiwala, Jacob; Tokarzewski, Richard J.; Schmitt, Frederick L.; and Sprecker, Mark A., 4,371,715, Cl. 568-659.000.
International Harvester Company: *See*—
Hale, Richard A.; and Hennessey, Richard G., 4,371,047, Cl. 180-54.00A.

International Standard Electric Corporation: *See—*
Barnes, Stuart R., 4,371,145, Cl. 249-80.000.
Parfree, Colin S.; and Worthington, Peter, 4,371,234, Cl. 350-96.230.
International Telephone and Telegraph Corporation: *See—*
Brancaleone, Salvatore T., 4,371,226, Cl. 339-147.00R.
Loucks, Richard S., 4,371,830, Cl. 323-265.000.
Moller, George O.; and Twiford, Richard L., 4,370,921, Cl. 99-405.000.
Shikasho, Satoru, 4,371,315, Cl. 417-5.000.
Internationale Verpakking Maatschappij BV: *See—*
Barendregt, Willem, 4,371,089, Cl. 215-256.000.
Inukai, Takao; Fukuda, Yoshiaki; and Ono, Mikiya, to Mitsubishi Mining & Cement Co., Ltd. Process for making porous sintered body of calcium phosphate. 4,371,484, Cl. 264-44.000.
Ionomet Company: *See—*
Das, Amitabha, 4,371,608, Cl. 430-315.000.
Iowa State University Research Foundation, Inc.: *See—*
Hostert, Richard J.; Mathiasmeier, Michael J.; and Gilbert, Robert J., 4,371,082, Cl. 211-22.000.
Ishida, Jiro; and Fujita, Takafumi, to Mitsubishi Steel Mfg. Co., Ltd.; and Fujita, Takafumi. Earthquake isolation floor. 4,371,143, Cl. 248-638.000.
Ishikawa, Hikaru: *See—*
Honda, Toshio; Fukuura, Yukio; Ishikawa, Hikaru; Kojima, Shozo; Tanuma, Itsuo; and Ogawa, Masao, 4,371,411, Cl. 156-281.000.
Ishikawa, Tadashi: *See—*
Ogihara, Masuo; Shinozaki, Nobuo; Ishikawa, Tadashi; and Seki, Yoichi, 4,371,267, Cl. 368-74.000.
Ishikawajima-Harima Jukogyo Kabushiki Kaisha: *See—*
Takeuchi, Osamu; Kokubun, Haruo; Yoshinaga, Hisashi; Hara, Shuichi; and Ban, Hiromichi, 4,371,149, Cl. 266-90.000.
Isobe, Kimiyasu: *See—*
Yamada, Hideaki; Tani, Yoshiki; and Isobe, Kimiyasu, 4,371,621, Cl. 435-191.000.
Isowa Industry Co., Ltd.: *See—*
Hattori, Fukutaro, 4,370,926, Cl. 101-207.000.
Istvan, Sandor: *See—*
Jarai, Miklos; Piukovich, Sandor; Istvan, Sandor; Gado, Istvan; Szell, Valeria; and Barta, Istvan, 4,371,622, Cl. 435-253.000.
Itagaki, Masato: *See—*
Murayama, Akira; Harada, Fumio; Arata, Tetsuya; Itagaki, Masato; Nakayama, Susumu; and Sofue, Masahisa, 4,371,319, Cl. 417-312.000.
Ito, Keishi; and Yamada, Ryuji, to Kabushiki Kaisha Mitsui Miike Seisakusho. Control method for winch of mining machinery. 4,370,856, Cl. 60-389.000.
Ito, Minao: *See—*
Hasegawa, Kazumasa; Ito, Minao; Sugiura, Saburo; Yamano, Kiyoichi; and Hayakawa, Shizunori, 4,371,392, Cl. 75-10.00R.
Ito, Yoshinori: *See—*
Hibino, Takashi; and Ito, Yoshinori, 4,370,865, Cl. 62-124.000.
Itoh, Isamu: *See—*
Toyoda, Takashi; Itoh, Isamu; and Yamada, Minoru, 4,371,610, Cl. 430-445.000.
Itoh, Kunio: *See—*
Wada, Masaru; Shimizu, Hirokazu; Sugino, Takashi; and Itoh, Kunio, 4,371,967, Cl. 372-45.000.
ITT Industries, Inc.: *See—*
Bienert, Herbert; Hanselmann, Dieter; Kohler, Alfred; and Prohaska, Hans, 4,370,774, Cl. 15-250.200.
Gollinger, Wolfgang, 4,371,794, Cl. 307-269.000.
Ivanov, Igor P.: *See—*
Kopysky, Boris D.; Dmitriev, Viktor D.; Khaustov, Georgy I.; Brodsky, Viktor M.; Surzhikov, Vitaly A.; Semenov, Evgeny I.; Chus, Vladimir G.; Misjulya, Viktor A.; Kandyba, Leonid F.; Ivanov, Igor P.; Bezzub, Grigory I.; Goldenberg, Yasha F.; Zonnenberg, Ilya S.; Paly, Alexandr G.; and Malkin, Arkady S., 4,370,879, Cl. 72-377.000.
Ivanov, Valentin A.; Khodosh, Vladimir A.; Shenkman, Mikhail Y.; Kirbatov, Vladimir L.; and Fishman, Iosif D. Shuttering for establishing concrete lining of tunnels. 4,371,290, Cl. 405-150.000.
Ivic, Michael. Control for a bilge pump. 4,371,316, Cl. 417-41.000.
Iwagaki, Masaru: *See—*
Kajiwara, Makoto; Miyamoto, Akihiko; Ohbayashi, Keiji; and Iwagaki, Masaru, 4,371,609, Cl. 430-373.000.
Iwasaki, Hidenori; Igarashi, Junichi; and Kasukawa, Shunichi. Photosensitive printing plate. 4,371,602, Cl. 430-175.000.
Iwasaki, Hiroyuki; and Kasahara, Kiyoshi, to Honda Giken Kogyo Kabushiki Kaisha. Fuel sedimentation device. 4,371,437, Cl. 210-94.000.
Iwasaki, Shinichiro, to Aisin Seiki Company, Limited. Thermodetector. 4,371,272, Cl. 374-184.000.
Iwasaki, Sokichi: *See—*
Watanabe, Kazutomi; Iwasaki, Sokichi; and Baba, Nobuyuki, 4,370,943, Cl. 118-218.000.
Iwata, Hiroshi; Yoshino, Tsunemi; Kashihara, Toshitsugu; and Morioka, Akitoshi, to West Electric Company, Ltd. Photographing lens system with focus informing means. 4,371,245, Cl. 354-198.000.
Iwata, Toshio; and Ookawa, Kiyoshi, to Mitsubishi Denki Kabushiki Kaisha. Ignition timing control system for internal combustion engine. 4,370,963, Cl. 123-425.000.
Iwata, Yoichi, to Akebono Brake Industry Co., Ltd. Pad clip for disc brake. 4,371,060, Cl. 188-73.380.
Iwatsu Electric Co., Ltd.: *See—*
Urano, Tadao; and Kaneko, Isamu, 4,371,808, Cl. 313-411.000.
Izawa, Taketoshi: *See—*
Shinohara, Masanao; Nakano, Yoshimasa; Kaise, Hirotsugu; Izawa, Taketoshi; and Miyazaki, Wasei, 4,371,524, Cl. 424-180.000.
Izrael, Victor. Pharmaceutical composition for retarding excessive platelet aggregation. 4,371,521, Cl. 424-94.000.
Izumi Denki Corporation: *See—*
Fujita, Teizo; Dohmoto, Hidetaka; and Toyoda, Shigeru, 4,371,922, Cl. 364-144.000.
Izumi, Rokuro: *See—*
Matsumoto, Kunio; Izumi, Rokuro; Seijo, Hideji; and Mizuguchi, Hiroyuki, 4,371,612, Cl. 435-44.000.
Izumi, Toshiaki; Saito, Seitoku; Maruta, Fumio; and Kameya, Minoru, to TDK Electronics Co., Ltd. Magnetic recording medium with stepwise orientation of deposited metallic particles. 4,371,590, Cl. 428-555.000.
Jackman, Peter R.; and Crick, David W., to First Inertia Switch Limited. Inerita switch device. 4,371,763, Cl. 200-61.45R.
Jackson, Richard B.: *See—*
Hochhauser, Arthur; and Jackson, Richard B., 4,371,560, Cl. 426-643.000.
Jackson, Timothy: *See—*
Dinwiddie, John M., Jr.; Freeman, Bobby J.; Jackson, Timothy; and Zipoy, William L., 4,371,932, Cl. 364-200.000.
Jacobsen, Orval E. Economizer with an integral gas bypass. 4,371,027, Cl. 165-1.000.
Jaeger: *See—*
Bezard, Jean-Jacques; and Delevallee, Bernard A., 4,371,834, Cl. 324-167.000.
Jaeger, Klaus, to Siemens Aktiengesellschaft. Apparatus for dot-matrix printing with proportional character spacing. 4,371,274, Cl. 400-121.000.
Jaffe, Edward E., to Du Pont de Nemours, E. I., and Company. Process for preparing polyolefin resin extended pigments. 4,371,642, Cl. 524-88.000.
Jain, Atul: *See—*
United States of America, National Aeronautics and Space Administration; and Jain, Atul, 4,371,873, Cl. 343-9.0PS.
Jakobsen, Einar. Wave motor, especially for propulsion of boats. 4,371,347, Cl. 440-9.000.
James River-Dixie/Northern, Inc.: *See—*
Gilling, Donald A.; and McCaskill, Albert G., 4,371,553, Cl. 426-124.000.
Janssens, Wilhelmus: *See—*
Van de Sande, Christian C.; Janssens, Wilhelmus; Lassig, Wolfgang; and Meier, Ernst, 4,371,604, Cl. 430-223.000.
Januschkowetz, Herbert; and Laub, Hans, to Siemens Aktiengesellschaft. Electroless deposition of nickel coatings and depositing baths therefor. 4,371,573, Cl. 427-438.000.
Japan Atomic Energy Research Institute: *See—*
Ando, Toshinari; Nishi, Masataka; Shimamoto, Susumu; Yoshida, Hiromichi; Suzumura, Takashi; Kakizaki, Kimio; Yamagishi, Ryozo; and Ogata, Hisanao, 4,371,741, Cl. 174-15.00S.
Japan Synthetic Rubber Co., Ltd.: *See—*
Ikeda, Hiroharu; and Shimozato, Yasuyuki, 4,371,668, Cl. 525-133.000.
Matsumoto, Shuichi; Yasuda, Kenji; Endoh, Masayuki; and Harada, Kunihiro, 4,371,713, Cl. 568-614.000.
Jarai, Miklos; Piukovich, Sandor; Istvan, Sandor; Gado, Istvan; Szell, Valeria; and Barta, Istvan, to CHINOIN Gyogyszer es Vegyeszeti Termekek Gyara R.T. Micromonospora culture. 4,371,622, Cl. 435-253.000.
Jarva, Inc.: *See—*
Snyder, Larry L., 4,371,211, Cl. 299-11.000.
Jeffrey, Michael J. Mobile log splitting apparatus. 4,371,019, Cl. 144-193.00A.
Jeneric Industries, Inc.: *See—*
Farber, Mark I., 4,371,436, Cl. 209-268.000.
Jenkins, John M., III; Carter, Max E., Sr.; Green, Michael L.; and Cavender, Marvin E., to Union Carbide Corporation. Method for detecting solidification in a mixed phase container. 4,371,977, Cl. 378-51.000.
Jenkins, O. C.: *See—*
Brandt, Warren J., 4,371,052, Cl. 180-287.000.
Jenkins, William M.: *See—*
Hunt, Ronald E.; and Jenkins, William M., 4,371,157, Cl. 271-2.000.
Jennings, G. Craig. Hand guard for table mounted cutting tool. 4,370,909, Cl. 83-437.000.
Jennings, Richard E.: *See—*
Campbell, Willis R.; Freimuth, John H.; Diederich, Anthony F., Jr.; and Jennings, Richard E., 4,370,848, Cl. 56-341.000.
Jensen, James D.; and Schoolar, Richard B., to United States of America, Navy. Graded gap semiconductor optical device. 4,371,232, Cl. 350-1.400.
Jensen, Warren W.: *See—*
Brann, John J.; Freer, Charles S., Jr.; and Jensen, Warren W., 4,371,929, Cl. 364-200.000.
Jentzsch, Joachim: *See—*
Marx, Karl; Winkler, Klaus; Schmidt, Kurt; and Jentzsch, Joachim, 4,371,158, Cl. 271-103.000.
Jeschar, Rudolf: *See—*
Mettig, Hermann; and Jeschar, Rudolf, 4,370,952, Cl. 123-41.840.
Jet Electronics and Technology Incorporated: *See—*
Lukso, Richard J., 4,371,978, Cl. 455-77.000.
Jinnai, Koichiro, to Ricoh Co., Ltd. Device for correcting ink dot misplacement in ink-jet printing. 4,371,878, Cl. 346-75.000.
Johansson, Leif. Surface trowelling device. 4,371,287, Cl. 404-84.000.

John Wyeth & Brother Limited: *See—*
Gregory, George K. E.; Peach, James M.; and Du Mayne, James D., 4,371,516, Cl. 424-22.000.
Johns Hopkins University, The: *See—*
Potember, Richard S.; Poehler, Theodore O., Jr.; and Cowan, Dwaine O., 4,371,883, Cl. 357-8.000.
Johnson, Edward M., Jr., to Kolcraft Products, Inc. Rockable infant seat/cradle. 4,371,206, Cl. 297-183.000.
Johnson, Michael R.; and Melvin, Lawrence S., Jr., to Pfizer Inc. 2-Hydroxy-4-(substituted) phenyl cycloalkanes and derivatives. 4,371,720, Cl. 568-731.000.
Johnson, Robert G.: *See—*
Abdelrahman, Mona; Fuchs, Ralph W.; Holman, James O.; Johnson, Robert G.; and Scott, M. Walter, 4,371,861, Cl. 338-25.000.
Johnson, Steven H., to Cobe Laboratories, Inc. Deaerating liquid. 4,371,385, Cl. 55-190.000.
Jonassen, Jorgen W. Gear-type universal coupling. 4,370,869, Cl. 464-156.000.
Jones, Adrian D., to Hills Industrie Limited. Perforate tube muffler. 4,371,053, Cl. 181-249.000.
Jones, John B., to Paraho Corporation. Zone separator for multiple zone vessels. 4,371,335, Cl. 432-95.000.
Jones, Johnny O., Jr.; and White, Charles C., Jr. Waterbed vibrator. 4,371,815, Cl. 318-114.000.
Jones, Keith A.; and Walker, Harry S., Jr., to Procter & Gamble Company, The. Liquid detergent compositions with tertiary alcohol skin feel additives. 4,371,461, Cl. 252-547.000.
Jones, Richard E., III: *See—*
Mauldin, Donald M.; and Jones, Richard E., III, 4,370,977, Cl. 128-80.00F.
Joo, Hong K. Musical pen. 4,371,278, Cl. 401-195.000.
Josephson, Edgar F.: *See—*
Fritzsche, Eldred N.; Josephson, Edgar F.; and Pulcrano, Frank C., 4,371,303, Cl. 414-281.000.
Joson, Luis K.: *See—*
Wang, James C.; Murfitt, Donald; Livingston, Paul H.; and Joson, Luis K., 4,371,194, Cl. 281-21.00R.
Jourdheuil, Pierre E. J.: *See—*
Voegele, Jean D.; Jourdheuil, Pierre E. J.; Pizzol nee Dalmasso, Jeannine M.; and Pintureau, Bernard C. J., 4,370,946, Cl. 119-1.000.
Joyal Products, Inc.: *See—*
Szantho, Charles F.; and Riordan, Edward D., 4,371,772, Cl. 219-89.000.
Jung, Albert, to Siemens Aktiengesellschaft. Electrically conductive connection of the active portions of an electrical component or of an integrated circuit to terminals. 4,371,231, Cl. 339-275.00R.
Jung, Werner: *See—*
Hohn, Richard; Jung, Werner; Winter, Gerhard; and Woerner, Siegfried, 4,371,879, Cl. 346-135.100.
Jungblut, Gottfried: *See—*
Moser, Robert; and Jungblut, Gottfried, 4,371,333, Cl. 432-3.000.
Kabachenko, Alexandr S.: *See—*
Sysolin, Petr V.; Zaitsev, Ivan I.; Pekerman, Gary M.; Kurzov, Jury P.; Tompakov, Alexandr E.; Maljuchenkov, Valery A.; and Kabachenko, Alexandr S., 4,371,004, Cl. 137-899.000.
Kabelitz, Hans-Peter: *See—*
Fischer, Berthold; Kabelitz, Hans-Peter; and Schmitz, Andreas, 4,371,323, Cl. 418-55.000.
Kabeshita, Akira: *See—*
Misawa, Yoshihiko; Kabeshita, Akira; Mori, Kazuhiro; Nakagawa, Hiroshi; and Araki, Shigeru, deceased, 4,370,804, Cl. 29-741.000.
Kabushiki Kaisha Kankyo Kaihatsu: *See—*
Muta, Natsuo; and Kanamaru, Toshihisa, 4,371,569, Cl. 427-230.000.
Kabushiki Kaisha Kawai Gakki Seisakusho: *See—*
Sakashita, Masao, 4,371,745, Cl. 174-115.000.
Kabushiki Kaisha Kinrei Kikai Seisakusho: *See—*
Suzuki, Kanji, 4,370,849, Cl. 57-71.000.
Kabushiki Kaisha Meiji Gomu Kasei: *See—*
Takahashi, Munetoshi; and Kato, Takashi, 4,371,292, Cl. 405-224.000.
Kabushiki Kaisha Mitsui Miike Seisakusho: *See—*
Ito, Keishi; and Yamada, Ryuji, 4,370,856, Cl. 60-389.000.
Kabushiki-Kaisha Tokairika-Denki-Seisakusho: *See—*
Tsuge, Hiroshi; Kawaharazaki, Takashi; and Yasumatsu, Jun, 4,371,126, Cl. 242-107.200.
Kabushiki Kaisha Yakult Honsha: *See—*
Kazumi, Ozawa; and Shinichiro, No, 4,370,925, Cl. 101-40.000.
Kackenmeister, Carl F.: *See—*
Broadt, David R.; Armstrong, Donald E.; and Kackenmeister, Carl F., 4,371,914, Cl. 362-15.000.
Broadt, David R.; and Kackenmeister, Carl F., 4,371,915, Cl. 362-15.000.
Kadlec, Vlastimil; Grosser, Vojtech; and Rosenthal, Jakub, to Chemopetrol, koncernovy podnik, Chemicke zavody ceskoslovenskosovetskeho pratelstvi. Catalyst for direct hydration of ethylene to ethyl alcohol and process for preparation thereof. 4,371,456, Cl. 252-435.000.
Kaetzel, Gilbert C.: *See—*
Grimmell, William C.; and Kaetzel, Gilbert C., 4,371,783, Cl. 250-227.000.
Kafitz, Egon: *See—*
Wilking, Hans; and Kafitz, Egon, 4,371,207, Cl. 297-348.000.
Kageyama, Hidehei; and Suzuki, Takahiko, to Kotobuki & Co., Ltd. Automatic pencil. 4,371,277, Cl. 401-54.000.
Kago, Yoshiyuki; Akita, Sigeyuki; and Fujikawa, Katsuhisa, to Nippon Soken, Inc. RPM Detection system for internal combustion engine. 4,371,835, Cl. 324-174.000.
Kaise, Hirotsugu: *See—*
Shinohara, Masanao; Nakano, Yoshimasa; Kaise, Hirotsugu; Izawa, Taketoshi; and Miyazaki, Wasei, 4,371,524, Cl. 424-180.000.
Kajitani, Makoto: *See—*
Fujimura, Hajime; Hiramatsu, Yasuzo; Yabuuchi, Takahiro; Hisaki, Masakatu; Takikawa, Katsuo; Honna, Takaji; Miyake, Hidekazu; and Kajitani, Makoto, 4,371,544, Cl. 424-322.000.
Kajiwara, Makoto; Miyamoto, Akihiko; Ohbayashi, Keiji; and Iwagaki, Masaru, to Konishiroku Photo Industry Co., Ltd. Forming method of a dye image. 4,371,609, Cl. 430-373.000.
Kakizaki, Kimio: *See—*
Ando, Toshinari; Nishi, Masataka; Shimamoto, Susumu; Yoshida, Hiromichi; Suzumura, Takashi; Kakizaki, Kimio; Yamagishi, Ryozo; and Ogata, Hisanao, 4,371,741, Cl. 174-15.00S.
Kakuichi Co. Ltd.: *See—*
Tanaka, Kenichi, 4,371,415, Cl. 156-433.000.
Kameya, Minoru: *See—*
Izumi, Toshiaki; Saito, Seitoku; Maruta, Fumio; and Kameya, Minoru, 4,371,590, Cl. 428-555.000.
Kaminski, Detlef: *See—*
Grossner, Horst; Kaminski, Detlef; and Schwerdt, Paul, 4,370,965, Cl. 123-426.000.
Kamiyama, Kiichi; and Oana, Yoshinori, to Tokyo Kogaku Kikai Kabushiki Kaisha. Apparatus for measuring curvatures of a spherical surface. 4,371,237, Cl. 351-245.000.
Kan, Kazunori: *See—*
Ohashi, Takehisa; Shimazaki, Masami; Kan, Kazunori; Kondo, Hideo; and Watanabe, Kiyoshi, 4,371,699, Cl. 548-201.000.
Kanamaru, Hisanobu; Okabe, Moisei; Tatsumi, Hideo; and Tohkairin, Akira, to Hitachi, Ltd. Method of coupling two metallic members. 4,370,793, Cl. 29-446.000.
Kanamaru, Toshihisa: *See—*
Muta, Natsuo; and Kanamaru, Toshihisa, 4,371,569, Cl. 427-230.000.
Kanaya, Shigeo: *See—*
Mese, Hisayoshi; and Kanaya, Shigeo, 4,371,146, Cl. 251-209.000.
Kandyba, Leonid F.: *See—*
Kopysky, Boris D.; Dmitriev, Viktor D.; Khaustov, Georgy I.; Brodsky, Viktor M.; Surzhikov, Vitaly A.; Semenov, Evgeny I.; Chus, Vladimir G.; Misjulya, Viktor A.; Kandyba, Leonid F.; Ivanov, Igor P.; Bezzub, Grigory I.; Goldenberg, Yasha F.; Zonnenberg, Ilya S.; Paly, Alexandr G.; and Malkin, Arkady S., 4,370,879, Cl. 72-377.000.
Kane, Bernard J.; and Von Genk, Richard A., to SCM Corporation. Cyclic terpenoid amines, their preparation and uses. 4,371,722, Cl. 568-828.000.
Kanegafuchi Chemical Industry Co., Ltd.: *See—*
Ohashi, Takehisa; Shimazaki, Masami; Kan, Kazunori; Kondo, Hideo; and Watanabe, Kiyoshi, 4,371,699, Cl. 548-201.000.
Kanegafuchi Kagaku Kogyo Kabushiki Kaisha: *See—*
Kato, Yasushi; and Furukawa, Hisao, 4,371,664, Cl. 525-100.000.
Kaneko, Isamu: *See—*
Urano, Tadao; and Kaneko, Isamu, 4,371,808, Cl. 313-411.000.
Kannenberg, Karl: *See—*
Aichelmann, Dietmar; Kannenberg, Karl; Schutte, Dieter; and Volling, Axel, 4,371,503, Cl. 422-307.000.
Kanno, Ryoichi: *See—*
Takeichi, Hitoshi; Furuhata, Hiroshi; Kanno, Ryoichi; Kodaira, Kuniyasu; Ohno, Mitio; and Matumoto, Hirozi, 4,370,985, Cl. 128-663.000.
Kano, Takashi, to Hitachi, Ltd. High voltage converter apparatus having overvoltage protection circuits for thyristors. 4,371,909, Cl. 361-91.000.
Kano, Yoshiaki: *See—*
Uemura, Yahiro; Goto, Takashi; Kano, Yoshiaki; and Funakoshi, Satoshi, 4,371,520, Cl. 424-85.000.
Kanoi, Minoru; and Hori, Yasuro, to Hitachi, Ltd. Static induction apparatus. 4,371,858, Cl. 336-100.000.
Kaplunov, Vadim B.: *See—*
Kuzmin, Viktor V.; Kaplunov, Vadim B.; and Ljuty, Boris I., 4,370,800, Cl. 29-598.000.
Karger, Eva R.: *See—*
Bartels-Keith, James R.; and Karger, Eva R., 4,371,603, Cl. 430-218.000.
Karger, Robert: *See—*
Weinzierl, Klaus; and Karger, Robert, 4,371,508, Cl. 423-242.000.
Karowiec, Krzysztof; Sedlaczek, Janusz; Mura, Alojzy; Pawelczyk, Jerzy; and Skrzypiec, Zbigniew, to Centrum Konstrukcyjno-Technologiczne Maszyn Gorniczych "Komag". Dust control unit. 4,371,477, Cl. 261-30.000.
Karp, Arthur: *See—*
Cohn, Seymour B.; Karp, Arthur; and Stone, David S., 4,371,854, Cl. 333-252.000.
Karr, Lawrence J.; Wasserman, Gary L.; and Boehme, George R., to Karr, Lawrence Joseph; and Wasserman, Gary Lee. Electronic pedometer. 4,371,945, Cl. 364-561.000.
Karr, Lawrence Joseph: *See—*
Karr, Lawrence J.; Wasserman, Gary L.; and Boehme, George R., 4,371,945, Cl. 364-561.000.
Kasahara, Kiyoshi: *See—*
Iwasaki, Hiroyuki; and Kasahara, Kiyoshi, 4,371,437, Cl. 210-94.000.

Kasai, Hidefumi: *See*—
Enomoto, Tadao; and Kasai, Hidefumi, 4,371,429, Cl. 204-4.000.
Kashihara, Toshitsugu: *See*—
Iwata, Hiroshi; Yoshino, Tsunemi; Kashihara, Toshitsugu; and Morioka, Akitoshi, 4,371,245, Cl. 354-198.000.
Kashiwase, Kohji; Machino, Yasuo; Mita, Muneo; Hiramatsu, Tsunenosuke; Morishita, Toshihiko; and Taniguchi, Mitsuo, to Nippon Chemical Industrial Co., Ltd.; and Kosei Co., Ltd. Metal substituted zeolites as stabilizers for halogen-containing resins. 4,371,656, Cl. 524-443.000.
Kasukawa, Shunichi: *See*—
Iwasaki, Hidenori; Igarashi, Junichi; and Kasukawa, Shunichi, 4,371,602, Cl. 430-175.000.
Kato, Takashi: *See*—
Nakamura, Norihiko; and Kato, Takashi, 4,371,479, Cl. 261-44.00C.
Takahashi, Munetoshi; and Kato, Takashi, 4,371,292, Cl. 405-224.000.
Kato, Takeshi: *See*—
Nagatsu, Toshiharu; Kato, Takeshi; Yamaguchi, Tokio; Akino, Miki; Matsuura, Sadao; and Sugimoto, Takashi, 4,371,514, Cl. 424-1.000.
Kato, Yasushi; and Furukawa, Hisao, to Kanegafuchi Kagaku Kogyo Kabushiki Kaisha. Vinyl resin composition containing silyl groups. 4,371,664, Cl. 525-100.000.
Kaufmann, Kenneth M., to Pako Corporation. Pulse width modulation speed control. 4,371,819, Cl. 318-341.000.
Kaveney, John R., Jr., to Caterpillar Tractor Co. Door lock. 4,371,205, Cl. 292-48.000.
Kawaguchi, Hiroshi, to Toyota Jidosha Kabushiki Kaisha. Dual type hydraulic circuit in a vehicle brake system. 4,371,215, Cl. 303-22.00R.
Kawaharazaki, Takashi: *See*—
Tsuge, Hiroshi; Kawaharazaki, Takashi; and Yasumatsu, Jun, 4,371,126, Cl. 242-107.200.
Kawai, Akiyoshi: *See*—
Akimoto, Hiroshi; and Kawai, Akiyoshi, 4,371,533, Cl. 424-248.540.
Kawamura, Yoshimi: *See*—
Tanaka, Kentaro; Tsuji, Naoki; Kondo, Eiji; and Kawamura, Yoshimi, 4,371,617, Cl. 435-119.000.
Kawasaki Jukogyo Kabushiki Kaisha: *See*—
Tanaka, Akio; Edamura, Mizuo; Furuitsu, Satoshi; and Kunise, Satoru, 4,371,787, Cl. 422-186.060.
Kawasaki, Teruo; Nomura, Hiroyuki; and Takeuchi, Mikio, to Nissan Motor Co., Ltd. Digital display device of vehicle use. 4,371,864, Cl. 340-62.000.
Kawasaki, Teruo: *See*—
Yamaki, Kiyoshi; Mizote, Masanori; Takeda, Hitoshi; Suzuki, Hidetaka; Nomura, Hiroyuki; Kawasaki, Teruo; and Mori, Kazuyuki, 4,371,940, Cl. 364-444.000.
Kay Springs, Inc.: *See*—
Krakauer, Daniel, 4,371,153, Cl. 267-105.000.
Kazumi, Ozawa; and Shinichiro, No, to Kabushiki Kaisha Yakult Honsha. Apparatus for multiple color printing. 4,370,925, Cl. 101-40.000.
Keene Corporation: *See*—
Van Dyk, Garritt C., Jr., 4,371,175, Cl. 277-34.000.
Keeney, Bill R., to Halliburton Company. Method of and composition for acidizing subterranean formations. 4,371,443, Cl. 252-8.55C.
Keigler, John E., to RCA Corporation. Solar array spacecraft reflector. 4,371,135, Cl. 244-173.000.
Keiper Automobiltechnik GmbH & Co. KG: *See*—
Engels, Bernd; Heise, Friedrich; and Cremer, Heinz P., 4,371,065, Cl. 192-8.00C.
Wilking, Hans; and Kafitz, Egon, 4,371,207, Cl. 297-348.000.
Keller, Frederick A., Jr.: *See*—
Schwartz, Robert D.; and Keller, Frederick A., Jr., 4,371,619, Cl. 435-140.000.
Kelley, G. Vinson: *See*—
Valstyn, Erich P.; and Kelley, G. Vinson, 4,371,905, Cl. 360-112.000.
Kelley, James W.: *See*—
Kort, Raymond C.; and Kelley, James W., 4,371,951, Cl. 364-900.000.
Kelman, Charles D. Anterior chamber intraocular lens. 4,370,760, Cl. 3-13.000.
Kendall, Arthur H.; Mitchell, Joseph W.; and Sambucetti, Carlos J., to International Business Machines Corporation. Electrochemical printhead. 4,371,273, Cl. 400-119.000.
Kendall Company, The: *See*—
Aronica, John A., 4,370,782, Cl. 24-198.000.
Kennametal Inc.: *See*—
Leibee, Donald L., 4,371,210, Cl. 299-10.000.
Kerckow, Albrecht: *See*—
Druschke, Wolfgang; Kerckow, Albrecht; and Stanger, Bernd, 4,371,659, Cl. 524-599.000.
Kerk, Klaus; Mueller, Dieter; and Oleiko, Bernd, to Rohm GmbH. Rigid, one-piece, biaxially stretched shaped body of synthetic resin and method for making the same. 4,371,575, Cl. 428-81.000.
Kerstens, Franciscus N. A.: *See*—
Gotje, Egbert B. G. W.; and Kerstens, Franciscus N. A., 4,371,848, Cl. 331-91.000.
Keydel, Wolfgang, to Licentia Patent-Verwaltungs-GmbH. Projectile antenna. 4,371,875, Cl. 343-708.000.
Khaustov, Georgy I.: *See*—
Kopysky, Boris D.; Dmitriev, Viktor D.; Khaustov, Georgy I.; Brodsky, Viktor M.; Surzhikov, Vitaly A.; Semenov, Evgeny I.; Chus, Vladimir G.; Misjulya, Viktor A.; Kandyba, Leonid F.; Ivanov, Igor P.; Bezzub, Grigory I.; Goldenberg, Yasha F.; Zonnenberg, Ilya S.; Paly, Alexandr G.; and Malkin, Arkady S., 4,370,879, Cl. 72-377.000.
Khodosh, Vladimir A.: *See*—
Ivanov, Valentin A.; Khodosh, Vladimir A.; Shenkman, Mikhail Y.; Kirbatov, Vladimir L.; and Fishman, Iosif D., 4,371,290, Cl. 405-150.000.
Kiesling, Clarence R.: *See*—
Dauel, Darold R.; Kiesling, Clarence R.; and May, Jerry L., 4,371,314, Cl. 416-20.00A.
Kikuchi, Toshiro; Ogawa, Masaru; and Ando, Makoto, to Toyo Boseki Kabushiki Kaisha. Process for producing acyl-coenzyme A oxidase. 4,371,620, Cl. 435-189.000.
Kilian, Ernst A.: *See*—
Eckert, Wolfgang; Holtkamp, Bernd; and Kilian, Ernst A., 4,371,841, Cl. 330-51.000.
Kilik, Ondrej: *See*—
Turza, Jozef; Kilik, Ondrej; and Rusnak, Jan, 4,371,217, Cl. 308-5.00R.
Kim, Dongsung R., to Burroughs Corporation. Apparatus for detecting, correcting and logging single bit memory read errors. 4,371,930, Cl. 364-200.000.
Kim, Leo: *See*—
Paxson, Timm E.; Kim, Leo; and Van Aken, Andre B., 4,371,716, Cl. 568-678.000.
Kim, Tong S.; and Lee, Yong N., to Borg-Warner Corporation. Distributor for plate fin evaporator. 4,370,868, Cl. 62-504.000.
Kim, Young D.: *See*—
Gardikes, John J.; and Kim, Young D., 4,371,648, Cl. 523-144.000.
Kimberlin, Dan W.: *See*—
De Wolf, Frank T.; and Kimberlin, Dan W., 4,371,799, Cl. 310-154.000.
Kimberly-Clark Corporation: *See*—
Frick, Richard H.; Hill, Randolph J.; and Roland, David R., 4,371,417, Cl. 156-495.000.
Kime, James A. Hydraulic fluid power system. 4,371,318, Cl. 417-304.000.
Kimpara, Akiyoshi, to Yamaha Hatsudoki Kabushiki Kaisha; and Sanshin Kogyo Kabushiki Kaisha. Fuel tank for reserving different kinds of fuels. 4,370,998, Cl. 137-264.000.
Kimura, Yoshiomi: *See*—
Nagashima, Yoshiaki; Kimura, Yoshiomi; and Hashimoto, Naoki, 4,371,550, Cl. 426-16.000.
King, Dennis D.; Breitwisch, Ronald L.; and Nickum, James D., to Rockwell International Corporation. Spectral squelch. 4,371,981, Cl. 455-219.000.
King, Derrick O.: *See*—
Braithwaite, John D.; King, Derrick O.; and Williams, Sidney J., 4,370,997, Cl. 137-116.300.
Kinoshita, Hirotsugu; Uemura, Hiroshi; and Sekiya, Makoto. Lubricant. 4,371,446, Cl. 252-51.50A.
Kioritz Corporation: *See*—
Takahashi, Hiroshi; and Satoh, Masatoshi, 4,370,809, Cl. 30-381.000.
Kirbatov, Vladimir L.: *See*—
Ivanov, Valentin A.; Khodosh, Vladimir A.; Shenkman, Mikhail Y.; Kirbatov, Vladimir L.; and Fishman, Iosif D., 4,371,290, Cl. 405-150.000.
Kirin Beer Kabushiki Kaisha: *See*—
Nagashima, Yoshiaki; Kimura, Yoshiomi; and Hashimoto, Naoki, 4,371,550, Cl. 426-16.000.
Kirstein, Fritz: *See*—
von Kempski, Walter; and Kirstein, Fritz, 4,371,196, Cl. 283-7.000.
Kisfaludy, Lajos: *See*—
Urogdi, Laszlo; Patthy nee Lukats, Agnes; Kisfaludy, Lajos; Moravcsik, Erno; Tudos nee Feuer, Helga; Otvos, Laszlo; Tegyei, Zsuzsanna; Palosi, Eva; Sarkadi, Adam; and Szporny, Laszlo, 4,371,534, Cl. 424-248.550.
Kishi, Takao: *See*—
Nozawa, Takamitsu; Kishi, Takao; and Hinokiyama, Minoru, 4,371,098, Cl. 222-321.000.
Kitazato, Kenji: *See*—
Unemi, Norio; Kitazato, Kenji; and Fujii, Setsuro, 4,371,535, Cl. 424-251.000.
Kitchen, John P.; and Mandusky, Jack C., to Hoover Universal, Inc. Box spring assembly with improved spring installation capability. 4,371,152, Cl. 267-103.000.
Kiwala, Jacob; Tokarzewski, Richard J.; Schmitt, Frederick L.; and Sprecker, Mark A., to International Flavors & Fragrances Inc. Process for preparing cyclohexyl phenethylether derivatives. 4,371,715, Cl. 568-659.000.
Klein, Gerald I.: *See*—
Niehenke, Edward C.; Klein, Gerald I.; and Linsenbardt, Aldo E., 4,371,851, Cl. 333-17.00L.
Klein, Richard M.: *See*—
Lempicki, Alexander; and Klein, Richard M., 4,371,965, Cl. 372-40.000.
Kleinewefers GmbH: *See*—
Schmidt, Sylvia, 4,370,923, Cl. 100-47.000.
Tschirner, Wolfgang, 4,370,872, Cl. 68-158.000.
Klement, Stefan H., to Honeywell Inc. High accuracy delta modulator. 4,371,850, Cl. 332-11.00D.
Klockner-Humboldt-Deutz AG: *See*—
Moser, Gottfried; and Gross, Hansjurgen, 4,370,956, Cl. 123-196.0AB.
Tholen, Paul, 4,371,112, Cl. 237-12.30A.

Klockner-Humboldt-Deutz Aktiengesellschaft: *See*—
Mettig, Hermann; and Jeschar, Rudolf, 4,370,952, Cl. 123-41.840.
Knifton, John F.: *See*—
Lin, Jiang-Jen; and Knifton, John F., 4,371,724, Cl. 568-902.000.
Knight, Mark B., to RCA Corporation. Dual-mode control signal generating apparatus. 4,371,793, Cl. 307-260.000.
Knoblauch, Wolfgang; and von Werner, Konrad, to Hoechst Aktiengesellschaft. Hydraulic fluid composition with improved properties based on boric acid esters, glycol mono-ethers and bis-(glycolether) formals. 4,371,448, Cl. 252-78.100.
Knoll, Klaus: *See*—
Dollheimer, Jurgen; and Knoll, Klaus, 4,371,813, Cl. 315-377.000.
Knolle, Jochen: *See*—
Beck, Gerhard; Knolle, Jochen; Rupp, Richard H.; and Scholkens, Bernward, 4,371,542, Cl. 424-274.000.
Kobayashi, Takayuki: *See*—
Andow, Fumio; Kobayashi, Takayuki; Kondow, Ryotaro; and Nii, Yoshiji, 4,371,908, Cl. 361-83.000.
Kobe Steel, Ltd.: *See*—
Watanabe, Toshihiko; Takeuchi, Naoki; Tsuruga, Soichi; and Koishi, Tadatsugu, 4,371,107, Cl. 228-32.000.
Koblo, Jochen; and Schuck, Stephan, to Hoechst Aktiengesellschaft. Metering pump. 4,371,321, Cl. 418-45.000.
Kodaira, Kuniyasu: *See*—
Takeichi, Hitoshi; Furuhata, Hiroshi; Kanno, Ryoichi; Kodaira, Kuniyasu; Ohno, Mitio; and Matumoto, Hirozi, 4,370,985, Cl. 128-663.000.
Koehnecke, Heinrich: *See*—
Boschulte, Rainer; Koehnecke, Heinrich; and Muecke, Siegfried, 4,371,831, Cl. 323-284.000.
Koehring GmbH: *See*—
Kuhn, Hans, 4,371,042, Cl. 173-127.000.
Koenig, Karl-Heinz: *See*—
Acker, Rolf-Dieter; Koenig, Karl-Heinz; Hamprecht, Gerhard; and Pommer, Ernst-Heinrich, 4,371,525, Cl. 424-184.000.
Koga, Toshio, to Nippon Electric Co., Ltd. Coded video signal transmitting and receiving system. 4,371,895, Cl. 358-136.000.
Kohler, Alfred: *See*—
Bienert, Herbert; Hanselmann, Dieter; Kohler, Alfred; and Prohaska, Hans, 4,370,774, Cl. 15-250.200.
Kohler, Gisbert: *See*—
Schurr, Volker; Nickel, Hans; Hoppner, Klaus; Kohler, Gisbert; Weiss, Hermann; and Wieland, Dieter, 4,370,810, Cl. 30-382.000.
Kohler, Rolf: *See*—
Wahl, Josef; Schmidt, Peter-Jurgen; Birmelin, Jorg; Grob, Ferdinand; Kohler, Rolf; Zabler, Erich; Heintz, Frieder; Bremer, Wolfgang; Kopernick, Viktor; Hugel, Robert; Weigl, Andreas; and Baumann, Gunther, 4,371,934, Cl. 364-424.000.
Koike, Shouichi, to Nissan Motor Co., Ltd., No. 2. Weatherstrip for vehicle closure. 4,370,832, Cl. 49-488.000.
Koishi, Tadatsugu: *See*—
Watanabe, Toshihiko; Takeuchi, Naoki; Tsuruga, Soichi; and Koishi, Tadatsugu, 4,371,107, Cl. 228-32.000.
Koizumi, Takeo: *See*—
Yoshizawa, Kiyoshi; Otsuka, Kenichi; Nojiro, Kikuo; Koizumi, Takeo; Mitsutomi, Katsuyoshi; and Nakamura, Seiji, 4,371,440, Cl. 210-601.000.
Kojima, Shozo: *See*—
Honda, Toshio; Fukuura, Yukio; Ishikawa, Hikaru; Kojima, Shozo; Tanuma, Itsuo; and Ogawa, Masao, 4,371,411, Cl. 156-281.000.
Kokubun, Haruo: *See*—
Takeuchi, Osamu; Kokubun, Haruo; Yoshinaga, Hisashi; Hara, Shuichi; and Ban, Hiromichi, 4,371,149, Cl. 266-90.000.
Kolcraft Products, Inc.: *See*—
Johnson, Edward M., Jr., 4,371,206, Cl. 297-183.000.
Kolektor p.c.: *See*—
Potocnik, Joze, 4,370,799, Cl. 29-597.000.
Kollross, Gunter. Process and device for axial shirring of a tubular material using an air stream. 4,370,780, Cl. 17-49.000.
Komine, Yoshio: *See*—
Shimizu, Ichiro; Komine, Yoshio; and Masunaga, Makoto, 4,371,240, Cl. 352-140.000.
Komoto, Haruo: *See*—
Matsuo, Motoyuki; Komoto, Haruo; and Mita, Yoshihisa, 4,371,332, Cl. 432-1.000.
Komukai, Takeo: *See*—
Okazaki, Tethuharu; Komukai, Takeo; and Uchikuga, Saburo, 4,371,472, Cl. 260-453.0RY.
Kondo, Eiji: *See*—
Tanaka, Kentaro; Tsuji, Naoki; Kondo, Eiji; and Kawamura, Yoshimi, 4,371,617, Cl. 435-119.000.
Kondo, Hideo: *See*—
Ohashi, Takehisa; Shimazaki, Masami; Kan, Kazunori; Kondo, Hideo; and Watanabe, Kiyoshi, 4,371,699, Cl. 548-201.000.
Kondo, Yoshiteru, to USM Corporation. Stud welding device. 4,371,773, Cl. 219-98.000.
Kondow, Ryotaro: *See*—
Andow, Fumio; Kobayashi, Takayuki; Kondow, Ryotaro; and Nii, Yoshiji, 4,371,908, Cl. 361-83.000.
Yamaura, Mitsuru; Kondow, Ryotaro; Inagaki, Junichi; and Okamoto, Eiichi, 4,371,926, Cl. 364-200.000.
Konig, Gunter: *See*—
Feiler, Horst; and Konig, Gunter, 4,371,121, Cl. 242-18.0DD.
Konig, Klaus; Illger, Hans-Walter; Seifert, Peter; and Meyborg, Holger, to Bayer Aktiengesellschaft. Solution of a polyurethane in a polyol and a process for using such a solution in the production of polyurethane plastics. 4,371,630, Cl. 521-173.000.
Koninklijke Emballage Industrie Van Leer B.V.: *See*—
Shefford, Roger A., 4,371,574, Cl. 428-35.000.
Konishiroku Photo Industry Co., Ltd.: *See*—
Kajiwara, Makoto; Miyamoto, Akihiko; Ohbayashi, Keiji; and Iwagaki, Masaru, 4,371,609, Cl. 430-373.000.
Nakamura, Hiroya, 4,371,898, Cl. 358-300.000.
Kopernick, Viktor: *See*—
Wahl, Josef; Schmidt, Peter-Jurgen; Birmelin, Jorg; Grob, Ferdinand; Kohler, Rolf; Zabler, Erich; Heintz, Frieder; Bremer, Wolfgang; Kopernick, Viktor; Hugel, Robert; Weigl, Andreas; and Baumann, Gunther, 4,371,934, Cl. 364-424.000.
Kopysky, Boris D.; Dmitriev, Viktor D.; Khaustov, Georgy I.; Brodsky, Viktor M.; Surzhikov, Vitaly A.; Semenov, Evgeny I.; Chus, Vladimir G.; Misjulya, Viktor A.; Kandyba, Leonid F.; Ivanov, Igor P.; Bezzub, Grigory I.; Goldenberg, Yasha F.; Zonnenberg, Ilya S.; Paly, Alexandr G.; and Malkin, Arkady S. Method for manufacturing a piercing mandrel. 4,370,879, Cl. 72-377.000.
Korfund Dynamics Corporation: *See*—
Baratoff, Paul, 4,371,141, Cl. 248-569.000.
Korobkov, Vladlen V.: *See*—
Mitin, Leonid A.; Mitrofanov, Vladislav V.; Fadeev, Vladimir Y.; Fadeev, Petr Y.; Korobkov, Vladlen V.; Kulagin, Rim A.; Vorozheikin, Anatoly A.; Ermilov, Nikolai P.; Smirnov, Jury V.; and Besedin, Ivan A., 4,370,916, Cl. 91-173.000.
Kort, Raymond C.; and Kelley, James W., to Control Data Corporation. Apparatus for converting serial input sparse vector format to parallel unpacked format for input to tandem arithmetic logic units. 4,371,951, Cl. 364-900.000.
Korte, Ralph J., to Champion International Corporation. Dispenser box with cutting edge. 4,371,104, Cl. 225-48.000.
Kosei Co., Ltd.: *See*—
Kashiwase, Kohji; Machino, Yasuo; Mita, Muneo; Hiramatsu, Tsunenosuke; Morishita, Toshihiko; and Taniguchi, Mitsuo, 4,371,656, Cl. 524-443.000.
Koslo, Robert C.: *See*—
Spangler, Paul J.; and Koslo, Robert C., 4,371,229, Cl. 339-223.00R.
Kotobuki & Co., Ltd.: *See*—
Kageyama, Hidehei; and Suzuki, Takahiko, 4,371,277, Cl. 401-54.000.
Kotzur, Joachim, to M.A.N. Maschinenfabrik Augsburg-Nurnburg Aktiengesellschaft. Fluid-locked shaft seal of reduced sliding speed. 4,371,173, Cl. 277-12.000.
Kraftwerk Union Aktiengesellschaft: *See*—
Ruthrof, Klaus; and Meier, Rainer, 4,370,889, Cl. 73-619.000.
Krakau, Herbert B.: *See*—
De, Bimal B.; Gierut, Lawrence G.; Krakau, Herbert B.; Naik, Kirit; and Tan-Atichat, Eddie, 4,371,754, Cl. 179-18.0EE.
Krakauer, Daniel, to Kay Springs, Inc. Sinuous spring with depth control. 4,371,153, Cl. 267-105.000.
Kramer, Charles J., to Xerox Corporation. Fluorescent activated, spatially quantitative light detector. 4,371,897, Cl. 358-294.000.
Kramer, Donald L., to Miles Laboratories, Inc. Method and apparatus for detecting bubbles in a liquid. 4,371,786, Cl. 250-343.000.
Kramer, Wolfgang; and Elbe, Hans-Ludwig, to Bayer Aktiengesellschaft. 4-Substituted 3,3-dimethyl-butan-2-ones, processes for their preparation and their use as intermediate products. 4,371,708, Cl. 568-31.000.
Kranz, Eckart, to Bayer Aktiengesellschaft. Preparation of 1-azolyl-3,3-dimethyl-1-phenoxy-butan-2-ols. 4,371,700, Cl. 548-262.000.
Krings, Helmut: *See*—
Hermann, Claus; and Krings, Helmut, 4,371,548, Cl. 424-365.000.
Kroenke, William J., to B. F. Goodrich Company, The. Polymer compositions containing sulfate glasses or glass-ceramics. 4,371,655, Cl. 524-423.000.
Kroh, Norma J.; and Spector, George. Crocheting aid. 4,370,870, Cl. 66-1.00A.
Kroiss, Gerald C., to Magnetic Peripherals Inc. Measurement of disc servo head/data head misalignment. 4,371,960, Cl. 369-43.000.
Krone, Hartmut: *See*—
Steinicke, Wolfgang; Badura, Wolfgang; Schiessl, Alois; Weinzierl, Werner; and Krone, Hartmut, 4,370,929, Cl. 102-202.000.
Krude, Werner: *See*—
Petrzelka, Miloslav; and Krude, Werner, 4,371,357, Cl. 464-128.000.
Kruger, Johann, to Electro-Motion, Inc. Rotary line transfer switch. 4,371,820, Cl. 318-468.000.
Kruppa, Claus; and Wuhrer, Wolfgang, to Escher Wyss GmbH. Marine vessel with propeller. 4,371,350, Cl. 440-69.000.
Krywiczanin, Wladyslaw H.; and Lumsden, William, to British-American Tobacco Company Limited. Feeding web material. 4,371,418, Cl. 156-497.000.
Kubiatowicz, James F.: *See*—
Silverman, Gary S.; Zera, Robert D.; Kubiatowicz, James F.; and Claussen, Robert L., 4,371,171, Cl. 273-357.000.
Kubokawa, Masaharu. Vibration prevention handle for a vibration device. 4,371,043, Cl. 173-162.00H.
Kubota, Hiroshi. Process for preparation of fructose-containing solid sugar. 4,371,402, Cl. 127-60.000.
Kubota, Ltd.: *See*—
Mihara, Takao; Morichika, Toshiaki; and Sone, Shigenori, 4,371,775, Cl. 219-121.0PK.
Kuhlman Corporation: *See*—
Winbigler, Paul H., 4,371,154, Cl. 267-179.000.

Kulın, Eberhard: *See—*
Ahne, Hellmut; Kuhn, Eberhard; and Rubner, Roland, 4,371,685, Cl. 528-73.000.
Kuhn, Hans, to Koehring GmbH. Fluid operated ram. 4,371,042, Cl. 173-127.000.
Kuhnel, Werner: *See—*
Spielau, Paul; Vohwinkel, Horst; and Kuhnel, Werner, 4,371,654, Cl. 524-296.000.
Kulagin, Rim A.: *See—*
Mitin, Leonid A.; Mitrofanov, Vladislav V.; Fadeev, Vladimir Y.; Fadeev, Petr Y.; Korobkov, Vladlen V.; Kulagin, Rim A.; Vorozheikin, Anatoly A.; Ermilov, Nikolai P.; Smirnov, Jury V.; and Besedin, Ivan A., 4,370,916, Cl. 91-173.000.
Kulig, Francis V., to Federal Paper Board Company, Inc. Sheet cake tray carton. 4,371,110, Cl. 229-31.0FS.
Kullik, Gunter R. J., to Progress-Elektrogerate Mauz & Pfeiffer GmbH & Co. Vacuum cleaner for household and industrial application. 4,370,776, Cl. 15-319.000.
Kunise, Satoru: *See—*
Tanaka, Akio; Edamura, Mizuo; Furuitsu, Satoshi; and Kunise, Satoru, 4,371,787, Cl. 422-186.060.
Kunz, Paul R. Apparatus for supplying a fuel/air mixture to an internal combustion engine. 4,370,970, Cl. 123-557.000.
Kunz, Wilhelm; and Gruber, Klaus, to Dolorgiet Beteiligungs GmbH. Isopropyl amine compounds. 4,371,545, Cl. 424-330.000.
Kureha Kagaku Kogyo Kabushiki Kaisha: *See—*
Hisatsugu, Kaji; and Watanabe, Kazuhiro, 4,371,454, Cl. 252-422.000.
Kuroda, Nobuyuki; Sano, Akira; Nakamura, Toru; Matsuura, Kazuo; and Miyoshi, Mituji, to Nippon Oil Company, Ltd. Process for preparing polyolefins. 4,371,679, Cl. 526-116.000.
Kuroda, Takeshi. Magnetic cylinder. 4,371,798, Cl. 310-80.000.
Kurosawa, Kei, to Tokyo Shibaura Denki Kabushiki Kaisha. Method for producing semiconductor device. 4,371,407, Cl. 148-187.000.
Kurumada, Tomoyuki: *See—*
Soma, Nobuo; Moromura, Syoji; Yoshioka, Takao; and Kurumada, Tomoyuki, 4,371,644, Cl. 524-102.000.
Kurzov, Jury P.: *See—*
Sysolin, Petr V.; Zaitsev, Ivan I.; Pekerman, Gary M.; Kurzov, Jury P.; Tompakov, Alexandr E.; Maljuchenkov, Valery A.; and Kabachenko, Alexandr S., 4,371,004, Cl. 137-899.000.
Kurzweil, Karel: *See—*
Badet, Bernard; and Kurzweil, Karel, 4,371,744, Cl. 174-68.500.
Kushner, Gerald J.; and Raleigh, Edward, to General Electric Company. Crimped tube joint. 4,371,199, Cl. 285-382.200.
Kusters, Eduard: *See—*
Ahrweiler, Karl-Heinz, 4,371,414, Cl. 156-361.000.
Kuwakado, Satosi: *See—*
Shimogawa, Toshiaki; Ando, Takayuki; and Kuwakado, Satosi, 4,371,127, Cl. 242-107.200.
Kuzmin, Viktor V.; Kaplunov, Vadim B.; and Ljuty, Boris I. Method of balancing electrical machine rotor. 4,370,800, Cl. 29-598.000.
Kwan, Stephen C.: *See—*
Takishima, Yoshiyuki; Uchidoi, Masanori; Mashimo, Yukio; Aizawa, Hiroshi; and Kwan, Stephen C., 4,371,243, Cl. 354-43.000.
Kyle, James C. Electrical insulating material with hermetic seal. 4,371,588, Cl. 428-448.000.
Kyuchukov, Yanko P., to UPZ kam Vimmess. Method of and apparatus for electroerosive production of profiled surfaces. 4,371,432, Cl. 204-129.350.
L. & C. Steinmuller GmbH: *See—*
Weinzierl, Klaus; and Karger, Robert, 4,371,508, Cl. 423-242.000.
Labbe, Claude. Vehicle frame straightening apparatus. 4,370,882, Cl. 72-447.000.
Lacombat, Michel; and Dubroeucq, Georges, to Thomson-CSF. Optical system for aligning two patterns and photo-repeater using such a system. 4,371,264, Cl. 356-356.000.
Laesser, Claude; Zafferri, Roberto; and Depery, Jean, to Ebauches S.A. Electromagnetic motor rotatable in either direction. 4,371,821, Cl. 318-696.000.
Lafuma, Philippe: *See—*
Deville, Christian; and Lafuma, Philippe, 4,371,852, Cl. 333-157.000.
Laine, Norman R.: *See—*
Sanchez, Moises G.; and Laine, Norman R., 4,371,513, Cl. 423-625.000.
Lampertz, Horst. Protection chamber. 4,371,283, Cl. 403-288.000.
Lange, Wolfgang: *See—*
Mathes, Nikolaus; Lange, Wolfgang; and Gerlach, Klaus, 4,371,485, Cl. 264-46.100.
Langumier, Georges, to Travaux et Produits Routiers. Bituminous mixtures for roads with very high performances, method for producing said mixtures and their application on roads. 4,371,401, Cl. 106-281.00R.
Larguia, Constancio. Arrangement for selectively changing the radiation and vibration transmission properties of panels. 4,370,837, Cl. 52-1.000.
Larsson, Hans G.; and Westman, Erik, to ASEA Aktiebolag. Method for manufacturing billets, from metal powder, intended to be subsequently rolled or forged. 4,371,396, Cl. 419-56.000.
Lassig, Wolfgang: *See—*
Van de Sande, Christian C.; Janssens, Wilhelmus; Lassig, Wolfgang; and Meier, Ernst, 4,371,604, Cl. 430-223.000.
Laub, Hans: *See—*
Januschkowetz, Herbert; and Laub, Hans, 4,371,573, Cl. 427-438.000.
Laue, Charles E., to Hamilton-Pax, Inc. Universal joint and method of making. 4,371,358, Cl. 464-136.000.
Laurel Bank Machine Co., Ltd.: *See—*
Watanabe, Kenkichi, 4,370,990, Cl. 133-8.00A.
Laurent, Henry: *See—*
Hofmeister, Helmut; Petzoldt, Karl; Annen, Klaus; Laurent, Henry; Wiechert, Rudolf; and Steinbeck, Hermann, 4,371,529, Cl. 424-243.000.
Lawson, Ashby G., to United States of America, National Aeronautics and Space Administration. Modified spiral wound retaining ring. 4,371,301, Cl. 411-517.000.
Lawson, Charles A., II; and Dufek, Wayne L., to Westinghouse Electric Corp. Position indication system. 4,371,496, Cl. 376-258.000.
Lazarus, Charles R.: *See—*
Fulger, Charles V.; Haas, Gerhard J.; Herman, Edwin B.; and Lazarus, Charles R., 4,371,551, Cl. 426-28.000.
Le Materiel Telephonique Thomson-CSF: *See—*
Paris, Philippe Y. J.; and Couturier, Alain, 4,371,343, Cl. 434-29.000.
Leaders, William M.; and Harrington, Charles D., to Uranium Recovery Corporation. Extractant and process for extracting uranium wet-process phosphoric acid. 4,371,504, Cl. 423-10.000.
LeBlanc, Edward J., III: *See—*
Willig, Roy L.; LeBlanc, Edward J., III; and Airhart, Harold, Sr., 4,371,044, Cl. 175-4.600.
Le Clair, Francis J.; and Surgant, John M., to Monsanto Company. Flowable herbicides. 4,371,390, Cl. 71-93.000.
Leco Corporation: *See—*
Bredeweg, Roger L., 4,371,971, Cl. 373-115.000.
Lectra Systemes S.A.: *See—*
Etcheparre, Jean; and Etcheparre, Bernard, 4,370,932, Cl. 105-163.0SK.
Lee, Kuo-Cheng. Cigarette lighter with flip-out windshield. 4,371,331, Cl. 431-151.000.
Lee, Len F.: *See—*
Howe, Robert K.; and Lee, Len F., 4,371,389, Cl. 71-90.000.
Lee, Patrick S., to Sperry Corporation. Self-adjusting dual mode automatic gain control circuit. 4,371,842, Cl. 330-141.000.
Lee, Richard J.; and Baranowski, Leonard J., to Standard Oil Company (Indiana). Alkylsalicylaldehyde preparation. 4,371,712, Cl. 568-430.000.
Lee, William W.; Brown, J. Martin; Martinez, Abelardo P.; and Cory, Michael J., to United States of America, Health and Human Services. Nitroimidazoles of low toxicity and high activity as radiosensitizers of hypoxic tumor cells. 4,371,540, Cl. 424-273.00R.
Lee, Yong N.: *See—*
Kim, Tong S.; and Lee, Yong N., 4,370,868, Cl. 62-504.000.
Lees, Ronald D.: *See—*
Cartwright, Richard V.; and Lees, Ronald D., 4,371,409, Cl. 149-94.000.
Leibee, Donald L., to Kennametal Inc. Freely rotatable pick bit holder on rotary driven member and method. 4,371,210, Cl. 299-10.000.
Leistner, William E.; Minagawa, Motonobu; Tsuruga, Kouji; and Harada, Masashi, to Phoenix Chemical Corporation. Stabilizer compositions and polyvinyl halide resin compositions containing 1,3-dicarbonyl compounds. 4,371,651, Cl. 524-178.000.
Lempicki, Alexander; and Klein, Richard M., to GTE Laboratories Incorporated. High neodymium content aluminophosphate glass and laser. 4,371,965, Cl. 372-40.000.
Lenk, Attila M.: *See—*
Podmaniczky, Andras; Tokes, Szabolcs; and Lenk, Attila M., 4,371,964, Cl. 372-38.000.
Lenzing, Richard S., to General Electric Company. Electrical contactor. 4,371,855, Cl. 335-132.000.
Leoncini, Novello: *See—*
Benai, Tommaso; Leoncini, Novello; and Paoletti, Ugo, 4,371,491, Cl. 264-196.000.
Le Sausse, Robert T.: *See—*
van den Berg, Johan H.; and Le Sausse, Robert T., 4,370,775, Cl. 15-250.320.
Leuthold, Albert, to Willy A. Bachofen AG. Agitator-type ball mill. 4,371,119, Cl. 241-66.000.
Levitt, George, to Du Pont de Nemours, E. I., and Company. Herbicidal sulfonamides. 4,371,391, Cl. 71-93.000.
Lewis, Kathy; and Avery, James E., to Atlantic Richfield Company. Terminal assembly for solar panels. 4,371,739, Cl. 136-251.000.
Lewis, Martyn A., to Minnesota Mining and Manufacturing Company. Spindle motor control system. 4,371,818, Cl. 318-313.000.
Lewis, Martyn A., to DMA Systems Corporation. Emergency head retract system for magnetic disc drives. 4,371,903, Cl. 360-75.000.
Leybold Heraeus GmbH: *See—*
Fischer, Berthold; Kabelitz, Hans-Peter; and Schmitz, Andreas, 4,371,323, Cl. 418-55.000.
Lezsak, Tibor: *See—*
Weiperth, Vilmos; and Lezsak, Tibor, 4,371,114, Cl. 239-309.000.
LGZ Landis & Gyr Zug AG: *See—*
Gander, Jean-Gabriel, 4,371,867, Cl. 340-310.00R.
Lhospice, Bernard, to Essilor International Cie Generale d'Optique. Spectacles frame. 4,371,236, Cl. 351-106.000.
Li, Chou H. Solid-state device. 4,371,406, Cl. 148-171.000.
Licentia Patent-Verwaltungs-GmbH: *See—*
Keydel, Wolfgang, 4,371,875, Cl. 343-708.000.

Lichtenstein, Eric S. Computer-control medical care system. 4,370,983, Cl. 128-630.000.
Liebersohn, Aaron. Bromine containing allylcarbonates. 4,371,681, Cl. 526-295.000.
Lien, Jih-Chang; and Chiu, Te-Long, to Texas Instruments Incorporated. Interlevel insulator for integrated circuit with implanted resistor element in second-level polycrystalline silicon. 4,370,798, Cl. 29-576.00B.
Liggett Group Inc.: *See—*
Siregar, John A.; and Arkoudilos, John, 4,371,558, Cl. 426-332.000.
Lin, Jiang-Jen; and Knifton, John F., to Texaco Inc. Ethanol synthesis by homologation of methanol. 4,371,724, Cl. 568-902.000.
Lind, Erwin; and Bader, Ilse, to Hoechst Aktiengesellschaft. Process for the preparation of printing forms and/or metallized images. 4,371,599, Cl. 430-49.000.
Lind, Laurel R., to Magnavox Consumer Electronics Co. Circuit for processing angle modulated broadcast signals. 4,371,749, Cl. 179-1.0GS.
Lindblom, Karl T., to Ostbergs Fabriks AB. Forest thinning device. 4,371,017, Cl. 144-3.00D.
Linde Aktiengesellschaft: *See—*
Benkmann, Christian, 4,371,380, Cl. 55-26.000.
Lindner, Friedrich; and Scheunemann, Kurt, to Deutsche Forschungs- und Versuchsanstalt fur Luft- und Raumfahrt e.V. Latent heat accumulator. 4,371,029, Cl. 165-10.000.
Lindvall, Sture S. Dip treating apparatus. 4,370,991, Cl. 134-76.000.
Lingner und Fischer GmbH: *See—*
Hermann, Claus; and Krings, Helmut, 4,371,548, Cl. 424-365.000.
Link, Lawrence R. Wall safe and door hinging means therefor. 4,370,935, Cl. 109-51.000.
Linsenbardt, Aldo E.: *See—*
Niehenke, Edward C.; Klein, Gerald I.; and Linsenbardt, Aldo E., 4,371,851, Cl. 333-17.00L.
Lion Corporation: *See—*
Matsukura, Tadaaki; and Nakagawa, Yukio, 4,371,470, Cl. 260-428.000.
Lipp, Ellis P.; and Utken, Jay, to Emhart Industries, Inc. Variable resistance control. 4,371,862, Cl. 338-174.000.
Liss, Warren A.: *See—*
Chen, I-Heng; and Liss, Warren A., 4,371,789, Cl. 307-38.000.
List, Hans: *See—*
Pomfret, Colin T., 4,370,951, Cl. 123-41.740.
Skatsche, Othmar; Wagner, Johann; and Obermayer, Bertram, 4,370,957, Cl. 123-196.0AB.
Woss, Gerhard; and Schreiber, Erich, 4,370,884, Cl. 73-117.300.
Little Giant Industries, Inc.: *See—*
Ashton, Larry J.; and Grimes, Ronald R., 4,371,055, Cl. 182-46.000.
Livingston, Paul H.: *See—*
Wang, James C.; Murfitt, Donald; Livingston, Paul H.; and Joson, Luis K., 4,371,194, Cl. 281-21.00R.
Wang, James C.; Murfitt, Donald; and Livingston, Paul H., 4,371,195, Cl. 281-21.00R.
Ljuty, Boris I.: *See—*
Kuzmin, Viktor V.; Kaplunov, Vadim B.; and Ljuty, Boris I., 4,370,800, Cl. 29-598.000.
Locke, Travis E., Sr. Image control mirror. 4,371,235, Cl. 350-280.000.
Lockheed Corporation: *See—*
Wirt, Leslie S., 4,371,054, Cl. 181-252.000.
Login, Robert B.: *See—*
Newkirk, David D.; Login, Robert B.; and Thir, Basil, 4,371,476, Cl. 260-709.000.
Lohest, Hans, to Barmag Barmer Maschinenfabrik AG. Apparatus and method for starting textile winder synchronous motor drives. 4,371,823, Cl. 318-705.000.
Lombardino, Joseph G.; and Harbert, Charles A., to Pfizer Inc. Certain pyridine methylthio acetaldehyde derivatives and non-cyclic and cyclic acetals thereof. 4,371,696, Cl. 546-283.000.
Longley, Stuart R., to U.S. Philips Corporation. Evanescent-mode microwave oscillator. 4,371,849, Cl. 331-96.000.
L'Oreal: *See—*
Vanlerberghe, Guy; Sebag, Henri; Zysman, Alexandre; and Dubief, Claude, 4,371,517, Cl. 424-70.000.
Lorraine, Jack R., to Bendix Corporation, The. Combination air pump and air filter. 4,371,322, Cl. 418-47.000.
Lotsch, Wolfgang: *See—*
Scherer, Hans; Lotsch, Wolfgang; and Bock, Gustav, 4,371,735, Cl. 544-300.000.
Lottick, Edward A. Electrocautery hemostat. 4,370,980, Cl. 128-303.170.
Loucks, Richard S., to International Telephone and Telegraph Corporation. High voltage charge-regulating power supply for a pulsed load. 4,371,830, Cl. 323-265.000.
Louisville Manufacturing Co., Inc.: *See—*
Melzer, Zecharia; and Rice, John E., Sr., 4,370,940, Cl. 112-286.000.
Lovegrove, Peter J., to Weatherford U.K. Limited. Safety interlock. 4,371,069, Cl. 192-135.000.
Lovette, Norris G., Jr.; and Ruprecht, David R., to Air Products and Chemicals, Inc. Spiral-type heat exchanger. 4,370,861, Cl. 62-63.000.
Lucas Industries Limited: *See—*
Brown, Peter W., 4,371,182, Cl. 280-6.00H.
Heibel, Helmut, 4,371,317, Cl. 417-298.000.
Ottewell, Gerald A., 4,371,061, Cl. 188-244.000.
Luchsinger, Charles R.: *See—*
Ferris, Daniel B.; Trossman, Martin M.; and Luchsinger, Charles R., 4,371,166, Cl. 273-157.00R.
Lucius, Gunter: *See—*
Weisbach, Gunter; Lucius, Gunter; and Plage, Dieter, 4,370,928, Cl. 101-242.000.
Lukso, Richard J., to Jet Electronics and Technology Incorporated. Automatic tuning system. 4,371,978, Cl. 455-77.000.
Lumsden, William: *See—*
Krywiczanin, Wladyslaw H.; and Lumsden, William, 4,371,418, Cl. 156-497.000.
M.A.N. Maschinenfabrik Augsburg-Nurnburg Aktiengesellschaft: *See—*
Kotzur, Joachim, 4,371,173, Cl. 277-12.000.
M.A.N.-ROLAND Druckmaschinen Aktiengesellschaft: *See—*
Fischer, Hermann, 4,370,927, Cl. 101-228.000.
M-O Valve Company Limited, The: *See—*
Baker, Basil O., 4,371,911, Cl. 361-124.000.
Maak, Norbert: *See—*
Rose, David; Moller, Hinrich; and Maak, Norbert, 4,371,370, Cl. 8-408.000.
MacDonald, Alexander J. R.: *See—*
Palmer, John H. W.; and MacDonald, Alexander J. R., 4,371,345, Cl. 434-368.000.
Machell, Greville, to Milliken Research Corporation. Hot melt adhesive bonded pile fabrics. 4,371,576, Cl. 428-92.000.
Machino, Yasuo: *See—*
Kashiwase, Kohji; Machino, Yasuo; Mita, Muneo; Hiramatsu, Tsunenosuke; Morishita, Toshihiko; and Taniguchi, Mitsuo, 4,371,656, Cl. 524-443.000.
Mack, Mark P.; and Berge, Charles T., to Conoco, Inc. Supported catalyst for olefin polymerization. 4,371,455, Cl. 252-429.00C.
Mackay, Donald A. M.: *See—*
Cherukuri, Subraman R.; Friello, Dominick R.; Parker, Ellery; Hopkins, Walter; and Mackay, Donald A. M., 4,371,549, Cl. 426-3.000.
MacMillan Bloedel Limited: *See—*
Barnes, Derek; Churchland, Mark T.; Herndier, Arnold W.; Schilling, Walter W.; and Welsh, James K., 4,371,020, Cl. 144-366.000.
MacRae, Alfred U.: *See—*
Hartman, Adrian R.; MacRae, Alfred U.; and Shackle, Peter W., 4,371,886, Cl. 357-38.000.
Madsen, Erik. Method, a binder, and an apparatus for binding sausage casings. 4,370,778, Cl. 17-45.000.
Maeda, Kohichi; and Yoshida, Masanobu, to Fujitsu Limited. Semiconductor device. 4,371,956, Cl. 365-185.000.
Maeda, Masayoshi: *See—*
Miyamoto, Akira; Maeda, Masayoshi; and Yamagishi, Yoshitaka, 4,371,675, Cl. 525-472.000.
Maekawa, Masakazu: *See—*
Sugiyama, Masatoshi; Nakanishi, Ichiro; Ogawa, Akira; and Maekawa, Masakazu, 4,371,582, Cl. 428-341.000.
Maerker, Gerhard: *See—*
Foglia, Thomas A.; Perlstein, Theodore; Nakano, Yoshio; and Maerker, Gerhard, 4,371,469, Cl. 260-405.600.
Magers, Wallace F.: *See—*
Foster, Donald D.; and Magers, Wallace F., 4,371,099, Cl. 222-321.000.
Magnavox Consumer Electronics Co.: *See—*
Lind, Laurel R., 4,371,749, Cl. 179-1.0GS.
Magner, Bengt, to Opto-System AB. Rod clamp. 4,371,281, Cl. 403-219.000.
Magnetic Peripherals Inc.: *See—*
Kroiss, Gerald C., 4,371,960, Cl. 369-43.000.
Magnuson, Gustav D.: *See—*
Woods, Eugene L.; and Magnuson, Gustav D., 4,371,943, Cl. 364-481.000.
Magyar Tudomanyos Akademia Szamitastechnikai es Automatizalasi Kutato Intezete: *See—*
Podmaniczky, Andras; Tokes, Szabolcs; and Lenk, Attila M., 4,371,964, Cl. 372-38.000.
Mahaffey, Robert L., Jr., to Milliken Research Corporation. Polyolefin plastic compositions comprising meta- or papa-derivatives (choro- or bromo-) of di-benzyuidene sorbitol. 4,371,645, Cl. 524-108.000.
Mahle GmbH: *See—*
Gurtler, Rudolf W., 4,371,174, Cl. 277-24.000.
Makimoto, Mitsuo; and Yamashita, Sadahiko, to Matsushita Electric Industrial Company, Limited. Strip-line resonator and a band pass filter having the same. 4,371,853, Cl. 333-204.000.
Makowski, Henry S.: *See—*
Agarwal, Pawan K.; and Makowski, Henry S., 4,371,640, Cl. 524-66.000.
Maljuchenkov, Valery A.: *See—*
Sysolin, Petr V.; Zaitsev, Ivan I.; Pekerman, Gary M.; Kurzov, Jury P.; Tompakov, Alexandr E.; Maljuchenkov, Valery A.; and Kabachenko, Alexandr S., 4,371,004, Cl. 137-899.000.
Malkin, Arkady S.: *See—*
Kopysky, Boris D.; Dmitriev, Viktor D.; Khaustov, Georgy I.; Brodsky, Viktor M.; Surzhikov, Vitaly A.; Semenov, Evgeny I.; Chus, Vladimir G.; Misjulya, Viktor A.; Kandyba, Leonid F.; Ivanov, Igor P.; Bezzub, Grigory I.; Goldenberg, Yasha F.; Zonnenberg, Ilya S.; Paly, Alexandr G.; and Malkin, Arkady S., 4,370,879, Cl. 72-377.000.
Mandusky, Jack C.: *See—*
Kitchen, John P.; and Mandusky, Jack C., 4,371,152, Cl. 267-103.000.
Manly, William A., to Graham Magnetics, Inc. EMI-Suppression from transmission lines. 4,371,742, Cl. 174-36.000.

Manning, John J.; Rosin, Robert E.; and Richart, Ralph M., to RMR Systems, Inc. Fluid measuring system. 4,371,790, Cl. 307-118.000.
Manufacture de Produits Chimiques Protex: *See—*
  Balland, Jean, 4,371,373, Cl. 8-650.000.
Manville Service Corporation: *See—*
  Peters, Walter B., 4,371,631, Cl. 523-153.000.
Mar, John: *See—*
  Sandoz, Oscar A.; and Mar, John, 4,371,957, Cl. 367-3.000.
Marello, Georges; and Vermalle, Jean-Claude, to Societe Nationale Industrielle Aerospatiale. Artificial satellite arrangement with unfoldable solar generators and antennas. 4,371,134, Cl. 244-173.000.
Marion, Charles P.: *See—*
  Brent, Albert; Marion, Charles P.; Richter, George N.; Crouch, William B.; Child, Edward T.; and Reynolds, Blake, 4,371,378, Cl. 48-86.00R.
  Brent, Albert; Marion, Charles P.; Richter, George N.; Crouch, William B.; Child, Edward T.; and Reynolds, Blake, 4,371,379, Cl. 48-197.00R.
Markfeld, Udo; and Wintergerst, Siegfried, to Zahnradfabrik Friedrichshafen AG. Reversing device for a gear transmission. 4,370,896, Cl. 74-339.000.
Markley, John B. Microphone and remote control system. 4,371,750, Cl. 179-1.0VL.
Markley, Lowell D.; Tong, Yulan C.; and Wood, Steven G., to Dow Chemical Company, The. Sulfur-substituted phenoxypyridines having antiviral activity. 4,371,537, Cl. 424-263.000.
Marlatt, George R., to Westinghouse Electric Corp. Self rupturing gas moderator rod for a nuclear reactor. 4,371,495, Cl. 376-209.000.
Marlo Company Incorporated, The: *See—*
  Case, Edward M.; and Hopper, Chester S., 4,371,180, Cl. 277-230.000.
Marritt, Clifford R.: *See—*
  DeAlto, Michael E.; DiGiacomo, Joseph D.; Marritt, Clifford R.; and Preston, Edward G., 4,370,908, Cl. 83-348.000.
Marsh, Dana G.: *See—*
  Schank, Richard L.; and Marsh, Dana G., 4,371,600, Cl. 430-56.000.
Marshall, Robert M.; and Dardoufas, Kimon C., to Allied Corporation. Polyamide yarn spin finish containing a glyceride and oxidized polyethylene. 4,371,658, Cl. 524-585.000.
Marsiglio, Carl M.: *See—*
  Day, Pierce B.; and Marsiglio, Carl M., 4,371,253, Cl. 355-4.000.
Martin, Charles F. Apparatus for connecting tubular members. 4,371,198, Cl. 285-165.000.
Martin, Verble C.; and Forestal, Robert J., to Young, Vern R.; and Fruehman, Peter G., a part interest to each. Repair patching kit for panels. 4,370,842, Cl. 52-514.000.
Martinez, Abelardo P.: *See—*
  Lee, William W.; Brown, J. Martin; Martinez, Abelardo P.; and Cory, Michael J., 4,371,540, Cl. 424-273.00R.
Maruta, Fumio: *See—*
  Izumi, Toshiaki; Saito, Seitoku; Maruta, Fumio; and Kameya, Minoru, 4,371,590, Cl. 428-555.000.
Maruyama, Katsuaki, to Toyoto Jidosha Kogyo Kabushiki Kaisha. Adjustable fastening device. 4,370,898, Cl. 74-540.000.
Marx, Karl; Winkler, Klaus; Schmidt, Kurt; and Jentzsch, Joachim, to VEB Kombinat Polygraph "Werner Lamberz" Leipzig. Sheet tilting suction type separator. 4,371,158, Cl. 271-103.000.
Mashimo, Yukio: *See—*
  Takishima, Yoshiyuki; Uchidoi, Masanori; Mashimo, Yukio; Aizawa, Hiroshi; and Kwan, Stephen C., 4,371,243, Cl. 354-43.000.
Massachusetts Institute of Technology: *See—*
  Fan, John C. C.; Geis, Michael W.; and Tsaur, Bor-Yeu, 4,371,421, Cl. 156-624.000.
Mast, Fred, to Gretag Aktiengesellschaft. Illuminating device for photographic copying apparatus. 4,371,258, Cl. 355-37.000.
Masuda, Sigefumi, to Fujitsu Limited. Lens-applied optical fiber connector. 4,371,233, Cl. 350-96.180.
Masugi, Takashi: *See—*
  Takaya, Takao; Masugi, Takashi; Ogino, Takashi; and Tsuji, Kiyoshi, 4,371,531, Cl. 424-246.000.
Masukawa, Noelle K., administratrix: *See—*
  Baxter, Warren N.; Merckling, Nicholas G., deceased; Masukawa, Noelle K., administratrix; Robinson, Ivan M.; and Stamatoff, Gelu S., 4,371,680, Cl. 526-159.000.
Masunaga, Makoto: *See—*
  Shimizu, Ichiro; Komine, Yoshio; and Masunaga, Makoto, 4,371,240, Cl. 352-140.000.
Masutani, Kenzo: *See—*
  Yamada, Ken'ichi; Sumitomo, Hiroyuki; Horiguchi, Akira; and Masutani, Kenzo, 4,371,034, Cl. 165-108.000.
Mathes, Nikolaus; Pitowski, Hans J.; and Vitzthum, Gunther, to Akzona Incorporated. Process and apparatus for the separation of immiscible liquid mixtures. 4,371,441, Cl. 210-649.000.
Mathes, Nikolaus; Lange, Wolfgang; and Gerlach, Klaus, to Akzona Incorporated. Process for making hydrophilic polyester fiber. 4,371,485, Cl. 264-46.100.
Mathiasmeier, Michael J.: *See—*
  Hostert, Richard J.; Mathiasmeier, Michael J.; and Gilbert, Robert J., 4,371,082, Cl. 211-22.000.
Matsukawa, Nobuo: *See—*
  Daitoku, Koichi; Sekine, Kenji; Matsukawa, Nobuo; and Sugimori, Shiro, 4,371,244, Cl. 354-173.000.
Matsukura, Tadaaki; and Nakagawa, Yukio, to Lion Corporation. Method for manufacturing high quality fatty acid esters. 4,371,470, Cl. 260-428.000.
Matsumoto, Kunio; Izumi, Rokuro; Seijo, Hideji; and Mizuguchi, Hiroyuki, to Toyo Jozo Company, Ltd. Immobilization of biological material with an acrylonitrile polymer. 4,371,612, Cl. 435-44.000.
Matsumoto, Shuichi; Yasuda, Kenji; Endoh, Masayuki; and Harada, Kunihiro, to Japan Synthetic Rubber Co., Ltd. Process for the preparation of polyether glycol. 4,371,713, Cl. 568-614.000.
Matsuo, Motoyuki; Komoto, Haruo; and Mita, Yoshihisa, to Mitsubishi Denki Kabushiki Kaisha. Method of controlling the tension of a strip within furnace. 4,371,332, Cl. 432-1.000.
Matsushita Electric Industrial Company, Limited: *See—*
  Makimoto, Mitsuo; and Yamashita, Sadahiko, 4,371,853, Cl. 333-204.000.
  Misawa, Yoshihiko; Kabeshita, Akira; Mori, Kazuhiro; Nakagawa, Hiroshi; and Araki, Shigeru, deceased, 4,370,804, Cl. 29-741.000.
  Wada, Masaru; Shimizu, Hirokazu; Sugino, Takashi; and Itoh, Kunio, 4,371,967, Cl. 372-45.000.
  Yoshimura, Hirofumi; Tanaka, Junzo; and Ikeda, Nobuo, 4,371,769, Cl. 219-10.55F.
Matsuura, Kazuo: *See—*
  Kuroda, Nobuyuki; Sano, Akira; Nakamura, Toru; Matsuura, Kazuo; and Miyoshi, Mituji, 4,371,679, Cl. 526-116.000.
Matsuura, Sadao: *See—*
  Nagatsu, Toshiharu; Kato, Takeshi; Yamaguchi, Tokio; Akino, Miki; Matsuura, Sadao; and Sugimoto, Takashi, 4,371,514, Cl. 424-1.000.
Mattheis, Dale B. Sound attenuator for use in conjunction with the motorcycle helmet or the like. 4,370,758, Cl. 2-423.000.
Matthews, Gordon H.; Tansil, Thomas B.; and Fannin, Michael L., to ECS Telecommunications, Inc. Electronic audio communication system. 4,371,752, Cl. 179-7.1TP.
Mattson, Melvin J. Hydraulic bucket cleaner. 4,371,307, Cl. 414-725.000.
Mattson, William F., to B. F. Goodrich Company, The. Apparatus and process for vulcanizing, adjusted for variable location of point of least cure. 4,371,483, Cl. 264-40.600.
Matumoto, Hirozi: *See—*
  Takeichi, Hitoshi; Furuhata, Hiroshi; Kanno, Ryoichi; Kodaira, Kuniyasu; Ohno, Mitio; and Matumoto, Hirozi, 4,370,985, Cl. 128-663.000.
Mauldin, Donald M.; and Jones, Richard E., III, to Driver, Kenneth D.; and Stills, Melvin L., part interest to each. Knee and elbow brace. 4,370,977, Cl. 128-80.00F.
Maurer, Dieter: *See—*
  Goeft, Manfred; and Maurer, Dieter, 4,371,049, Cl. 180-255.000.
Maxey, Donald R. Inverted channel focusing solar collector. 4,370,974, Cl. 126-439.000.
Maxwell, Harry L. Key deposit return machine. 4,371,070, Cl. 194-4.00D.
May, Adolf; Voetz, Franz J.; and Gerl, August, to Hoechst Aktiengesellschaft. Water-repellent gypsum mortar. 4,371,399, Cl. 106-109.000.
May, Jerry L.: *See—*
  Dauel, Darold R.; Kiesling, Clarence R.; and May, Jerry L., 4,371,314, Cl. 416-20.00A.
May, John E.; and Zohler, Steven R., to General Electric Company. Solderable varistor. 4,371,860, Cl. 338-21.000.
Mayer, Hans: *See—*
  Gossler, Gerhard; Petri, Heinz; and Mayer, Hans, 4,371,780, Cl. 219-446.000.
Maynard, Arthur D.; and Abrams, Joseph L. Energy saving water heater control circuit. 4,371,779, Cl. 219-328.000.
Maytham, Walter J., to Speed Systems, Inc. Cutting tool with wedge shaped cutting blade to reduce friction. 4,370,808, Cl. 30-353.000.
McAlinden, Daniel P.: *See—*
  Montgomery, Gary V.; and McAlinden, Daniel P., 4,371,095, Cl. 222-153.000.
McAlister, Roy E. Apparatus for making plastic solar panel structure. 4,371,326, Cl. 425-71.000.
McCaskey, Harold O.; and Benson, Melvin E., to Westinghouse Electric Corp. Fire-resistant filler sheet laminates. 4,371,579, Cl. 428-204.000.
McCaskill, Albert G.: *See—*
  Gilling, Donald A.; and McCaskill, Albert G., 4,371,553, Cl. 426-124.000.
McCombs, Norman R., to Green & Kellogg, Inc. Bed vessels for a compact oxygen concentrator. 4,371,384, Cl. 55-179.000.
McCoy, David R.; and Naylor, Carter G., to Texaco Inc. Process for secondary recovery. 4,371,444, Cl. 252-8.55D.
McDonnell Douglas Corporation: *See—*
  Biferno, Michael A., 4,371,870, Cl. 340-716.000.
McEntire, Edward E.; and Gipson, Robert M., to Texaco Development Corporation. Substituted alkylene oxides from substituted alkylene carbonates. 4,371,704, Cl. 549-518.000.
McGrail, Patrick T., to Imperial Chemical Industries Limited. Production of anti-static thermoplastics films. 4,371,489, Cl. 264-129.000.
McGregor, William H., to American Home Products Corporation. Mammalian collagenase inhibitors. 4,371,465, Cl. 260-112.50R.
McGregor, William H., to American Home Products Corporation. Mammalian collagenase inhibitors. 4,371,466, Cl. 260-112.50R.
McGuffin, William G., to RCA Corporation. Position sensor for video disc. 4,371,959, Cl. 369-43.000.
McGuire, Patrick L.; and Barraclough, Bruce L., to United States of America, Energy. Method and apparatus for recovering unstable cores. 4,371,045, Cl. 175-17.000.
McIntyre, Donald B.; and McIntyre, Frederic S., to Acumeter Laboratories, Inc. Wide-band and continuous line adhesive applicator and method for cigarette filter attachment and the like. 4,371,571, Cl. 427-285.000.

McIntyre, Frederic S.: *See—*
  McIntyre, Donald B.; and McIntyre, Frederic S., 4,371,571, Cl. 427-285.000.
McKean, John A., to Titan Tool Co. Controlled-torque apparatus. 4,371,354, Cl. 464-36.000.
McNair, Robert J., Jr., to Avco Corporation. Two stroke cycle engine with sustained power stroke. 4,370,959, Cl. 123-295.000.
McSherry, Charles K.: *See—*
  Mosbach, Erwin H.; McSherry, Charles K.; and Hylemon, Phillip B., 4,371,528, Cl. 424-241.000.
Medernach, John W.; Novak, Ivan A.; and Bush, Harry D., to Motorola, Inc. Method for fabricating aligned patterns on the opposed surfaces of a transparent substrate. 4,371,598, Cl. 430-22.000.
Medical Laboratory Automation, Inc.: *See—*
  Scordato, Richard E.; and Varca, Robert J., 4,371,498, Cl. 422-102.000.
Medrad, Inc.: *See—*
  Reilly, David M., 4,370,982, Cl. 604-98.000.
Meier, Dieter, to Vemag. Method and apparatus for intermittently dispensing flowable foodstuff. 4,370,779, Cl. 17-49.000.
Meier, Ernst: *See—*
  Van de Sande, Christian C.; Janssens, Wilhelmus; Lassig, Wolfgang; and Meier, Ernst, 4,371,604, Cl. 430-223.000.
Meier, Rainer: *See—*
  Ruthrof, Klaus; and Meier, Rainer, 4,370,889, Cl. 73-619.000.
Meixner, Hans; and Schebler, Andreas, to Siemens Aktiengesellschaft. Electric heating device employing PTC heating element for preheating of heating oil. 4,371,778, Cl. 219-302.000.
Melton, Vernon L. Cam controlled multi-axis automatic welding machine. 4,371,105, Cl. 228-7.000.
Melvin, Lawrence S., Jr.: *See—*
  Johnson, Michael R.; and Melvin, Lawrence S., Jr., 4,371,720, Cl. 568-731.000.
Melzer, Jaroslav: *See—*
  Hertel, Otto; Scharf, Emil; Melzer, Jaroslav; and Fikentscher, Rolf, 4,371,674, Cl. 525-435.000.
Melzer, Zecharia; and Rice, John E., Sr., to Louisville Manufacturing Co., Inc. Automatic thread trimmer for computerized zigzag embroidery sewing machine. 4,370,940, Cl. 112-286.000.
Memon, Nazir A., to Rohm and Haas Company. Process for applying a silicone or siloxane-based abrasion resistant coating to a polycarbonate substrate, and coated articles. 4,371,585, Cl. 428-412.000.
Memorex Corporation: *See—*
  Huber, William D., 4,371,900, Cl. 360-40.000.
Menge, Richard J. Wall support brace. 4,370,843, Cl. 52-693.000.
Mercer, Roger W.; and Hay, Louis E. Dental articulator having simplified means for mounting dental casts. 4,371,338, Cl. 433-60.000.
Mercier, Olivier, to BBC Brown, Boveri & Company, Limited. Time delay switch. 4,371,791, Cl. 307-141.000.
Merckling, Nicholas G., deceased: *See—*
  Baxter, Warren N.; Merckling, Nicholas G., deceased; Masukawa, Noelle K., administratrix; Robinson, Ivan M.; and Stamatoff, Gelu S., 4,371,680, Cl. 526-159.000.
Merrell Dow Pharmaceuticals Inc.: *See—*
  Grisar, J. Martin; Schnettler, Richard A.; and Dage, Richard C., 4,371,737, Cl. 544-370.000.
Merrill, Richard E.: *See—*
  Grossman, Harold; Merrill, Richard E.; and Monaghan, Paul B., 4,371,632, Cl. 523-164.000.
Mese, Hisayoshi; and Kanaya, Shigeo, to Fuji Metal Mfg. Co., Ltd. Ball valve. 4,371,146, Cl. 251-209.000.
Metallurgical Process Limited: *See—*
  Gammon, Michael W.; and Clarke, John A., 4,371,151, Cl. 266-186.000.
Mettig, Hermann; and Jeschar, Rudolf, to Klockner-Humboldt-Deutz Aktiengesellschaft. Reciprocable piston internal combustion engine with at least one cylinder bushing. 4,370,952, Cl. 123-41.840.
Meyborg, Holger: *See—*
  Konig, Klaus; Illger, Hans-Walter; Seifert, Peter; and Meyborg, Holger, 4,371,630, Cl. 521-173.000.
Meyer, Jacques: *See—*
  Bernelin, Daniel; and Meyer, Jacques, 4,371,638, Cl. 523-427.000.
Meyerstein, Michael V.: *See—*
  Debortoli, George; Meyerstein, Michael V.; and Velsher, Benne, 4,371,757, Cl. 179-98.000.
Michaux, Jacques M., to Sacilor-Acieries et Laminoirs de Lorraine. Rolling mill rolls. 4,370,877, Cl. 72-222.000.
Micro-Plate, Inc.: *See—*
  Eidschun, Charles D., 4,371,422, Cl. 156-640.000.
Midwestco, Inc.: *See—*
  Moyer, James D.; and Hoffert, Robert S., 4,370,936, Cl. 112-10.000.
Mihara, Takao; Morichika, Toshiaki; and Sone, Shigenori, to Kubota, Ltd. Method and apparatus for plasma welding. 4,371,775, Cl. 219-121.0PK.
Miles, John K.: *See—*
  Bottemiller, Donald L.; and Miles, John K., 4,371,142, Cl. 248-573.000.
Miles Laboratories, Inc.: *See—*
  Kramer, Donald L., 4,371,786, Cl. 250-343.000.
Miller, Brian T.: *See—*
  Hunt, Roger W.; Miller, Brian T.; and Schroeder, Donald R., 4,371,078, Cl. 206-329.000.
Miller, Jack V., to Gravity Guidance, Incorporated. Method for manufacturing a thermoplastic cylindrical clamp. 4,371,494, Cl. 264-522.000.
Miller, James E.: *See—*
  Trussell, C. Ward, Jr.; and Miller, James E., 4,371,968, Cl. 372-50.000.
Miller, Norman, legatee: *See—*
  Miller, Pauline K., deceased; and Miller, Norman, legatee, 4,371,026, Cl. 160-349.00D.
Miller, Pauline K., deceased; and by Miller, Norman, legatee. Air conditioner supported curtain holder. 4,371,026, Cl. 160-349.00D.
Miller, Robert S.: *See—*
  Zarrelli, Neal; Bocassi, Joseph V.; and Miller, Robert S., 4,370,969, Cl. 123-525.000.
Miller, Terry R. Pneumatic system for compressed air driven vehicle. 4,370,857, Cl. 60-413.000.
Milliken Research Corporation: *See—*
  Machell, Greville, 4,371,576, Cl. 428-92.000.
  Mahaffey, Robert L., Jr., 4,371,645, Cl. 524-108.000.
  Moore, Patrick D., 4,371,688, Cl. 528-112.000.
  Smrekar, Joseph J., 4,371,371, Cl. 8-531.000.
Minagawa, Motonobu; and Nakahara, Yutaka, to Adeka Argus Chemical Co. Ltd. 2,6-Di-tertiary butyl phenyl phosphites and synthetic resin compositions having enhanced stability to heat and light. 4,371,646, Cl. 524-119.000.
Minagawa, Motonobu; Nakahara, Yutaka; and Tobita, Etsuo, to Adeka Argus Chemical Co. Ltd. 2,6-Di-tertiary butyl phenyl pentaerythritol spiro bis-phosphites enhancing the stability to heat and light of synthetic resin. 4,371,647, Cl. 524-120.000.
Minagawa, Motonobu: *See—*
  Leistner, William E.; Minagawa, Motonobu; Tsuruga, Kouji; and Harada, Masashi, 4,371,651, Cl. 524-178.000.
Ministry of International Trade & Industry: *See—*
  Takada, Susumu, 4,371,796, Cl. 307-476.000.
Minnesota Mining and Manufacturing Company: *See—*
  Lewis, Martyn A., 4,371,818, Cl. 318-313.000.
Minnis, C. W.: *See—*
  Frias, Robert; Minnis, C. W.; Hawkins, A. Hubert; and Davis, Wendell, 4,371,302, Cl. 414-22.000.
Minuto, Maurice A. Method of making bouncing silicone putty-like compositions. 4,371,493, Cl. 264-236.000.
Mir, Jose M., to Eastman Kodak Company. Light valve imaging with optimized addressing potential(s) to reduce inter-pixel nonuniformity. 4,371,892, Cl. 358-75.000.
Miro, Carl F. Window frame assembly. 4,370,828, Cl. 49-383.000.
Misawa, Yoshihiko; Kabeshita, Akira; Mori, Kazuhiro; Nakagawa, Hiroshi; and Araki, Shigeru, deceased (by Araki, Kaeko, administratrix), to Matsushita Electric Industrial Co., Ltd. Electronic component inserting apparatus. 4,370,804, Cl. 29-741.000.
Misjulya, Viktor A.: *See—*
  Kopysky, Boris D.; Dmitriev, Viktor D.; Khaustov, Georgy I.; Brodsky, Viktor M.; Surzhikov, Vitaly A.; Semenov, Evgeny I.; Chus, Vladimir G.; Misjulya, Viktor A.; Kandyba, Leonid F.; Ivanov, Igor P.; Bezzub, Grigory I.; Goldenberg, Yasha F.; Zonnenberg, Ilya S.; Paly, Alexandr G.; and Malkin, Arkady S., 4,370,879, Cl. 72-377.000.
Misner, Ralf: *See—*
  Schwarz, Dieter; Misner, Ralf; and Glasbergen, Johannes W., 4,371,972, Cl. 375-30.000.
Mita, Muneo: *See—*
  Kashiwase, Kohji; Machino, Yasuo; Mita, Muneo; Hiramatsu, Tsunenosuke; Morishita, Toshihiko; and Taniguchi, Mitsuo, 4,371,656, Cl. 524-443.000.
Mita, Yoshihisa: *See—*
  Matsuo, Motoyuki; Komoto, Haruo; and Mita, Yoshihisa, 4,371,332, Cl. 432-1.000.
Mitchell, Joseph W.: *See—*
  Kendall, Arthur H.; Mitchell, Joseph W.; and Sambucetti, Carlos J., 4,371,273, Cl. 400-119.000.
Mitin, Leonid A.; Mitrofanov, Vladislav V.; Fadeev, Vladimir Y.; Fadeev, Petr Y.; Korobkov, Vladlen V.; Kulagin, Rim A.; Vorozheikin, Anatoly A.; Ermilov, Nikolai P.; Smirnov, Jury V.; and Besedin, Ivan A. Percussive device. 4,370,916, Cl. 91-173.000.
Mitrofanov, Vladislav V.: *See—*
  Mitin, Leonid A.; Mitrofanov, Vladislav V.; Fadeev, Vladimir Y.; Fadeev, Petr Y.; Korobkov, Vladlen V.; Kulagin, Rim A.; Vorozheikin, Anatoly A.; Ermilov, Nikolai P.; Smirnov, Jury V.; and Besedin, Ivan A., 4,370,916, Cl. 91-173.000.
Mitrovich, Svetislav; and Beaty, Ronald L., to Xerox Corporation. Sheet stacking output tray. 4,371,276, Cl. 400-625.000.
Mitsubishi Burlington Co., Ltd.: *See—*
  Sato, Minoru; Hirose, Yoshiteru; and Toyoshima, Shigeshi, 4,371,577, Cl. 428-96.000.
Mitsubishi Denki Kabushiki Kaisha: *See—*
  Iwata, Toshio; and Ookawa, Kiyoshi, 4,370,963, Cl. 123-425.000.
  Matsuo, Motoyuki; Komoto, Haruo; and Mita, Yoshihisa, 4,371,332, Cl. 432-1.000.
  Uchikawa, Fusaoki; Tanaka, Hideharu; Sekiya, Mutsuo; and Ohata, Yasufumi, 4,371,581, Cl. 428-304.400.
Mitsubishi Gas Chemical Company, Inc.: *See—*
  Gaku, Morio; and Ikeguchi, Nobuyuki, 4,371,689, Cl. 528-162.000.
  Miyamoto, Akira; Maeda, Masayoshi; and Yamagishi, Yoshitaka, 4,371,675, Cl. 525-472.000.
Mitsubishi Mining & Cement Co., Ltd.: *See—*
  Inukai, Takao; Fukuda, Yoshiaki; and Ono, Mikiya, 4,371,484, Cl. 264-44.000.

Mitsubishi Oil Co., Ltd.: *See*—
Horita, Yoshiharu; Fujimoto, Kenichi; Hoshino, Michio; Takito, Tetsuo; and Muraki, Masayoshi, 4,371,726, Cl. 585-3.000.
Mitsubishi Steel Mfg. Co., Ltd.: *See*—
Ishida, Jiro; and Fujita, Takafumi, 4,371,143, Cl. 248-638.000.
Mitsugi, Koji: *See*—
Utagawa, Takashi; Miyoshi, Takeshi; Morisawa, Hirokazu; Yamazaki, Akihiro; Yoshinaga, Fumihiro; and Mitsugi, Koji, 4,371,613, Cl. 435-88.000.
Mitsuhashi, Yuji, to Dai Nippon Insatsu Kabushiki Kaisha. Dot percentage measuring device. 4,371,265, Cl. 356-432.000.
Mitsui & Co., Ltd.: *See*—
Sato, Minoru; Hirose, Yoshiteru; and Toyoshima, Shigeshi, 4,371,577, Cl. 428-96.000.
Mitsutomi, Katsuyoshi: *See*—
Yoshizawa, Kiyoshi; Otsuka, Kenichi; Nojiro, Kikuo; Koizumi, Takeo; Mitsutomi, Katsuyoshi; and Nakamura, Seiji, 4,371,440, Cl. 210-601.000.
Miwa, Kiyoshi; and Momose, Haruo, to Ajinomoto Company Incorporated. Method for stabilizing the characteristics of microorganism containing a plasmid. 4,371,615, Cl. 435-115.000.
Miyake, Hidekazu: *See*—
Fujimura, Hajime; Hiramatsu, Yasuzo; Yabuuchi, Takahiro; Hisaki, Masakatu; Takikawa, Katsuo; Honna, Takaji; Miyake, Hidekazu; and Kajitani, Makoto, 4,371,544, Cl. 424-322.000.
Miyamoto, Akihiko: *See*—
Kajiwara, Makoto; Miyamoto, Akihiko; Ohbayashi, Keiji; and Iwagaki, Masaru, 4,371,609, Cl. 430-373.000.
Miyamoto, Akira; Maeda, Masayoshi; and Yamagishi, Yoshitaka, to Mitsubishi Gas Chemical Company, Inc. Process for preparation of modified aromatic hydrocarbon resin. 4,371,675, Cl. 525-472.000.
Miyasaka, Hiroshi; and Yamada, Shinji, to Rhythm Watch Company Limited. Time correcting circuit for timepiece with electrochromic display. 4,371,268, Cl. 368-82.000.
Miyazaki, Wasei: *See*—
Shinohara, Masanao; Nakano, Yoshimasa; Kaise, Hirotsugu; Izawa, Taketoshi; and Miyazaki, Wasei, 4,371,524, Cl. 424-180.000.
Miyoshi, Mituji: *See*—
Kuroda, Nobuyuki; Sano, Akira; Nakamura, Toru; Matsuura, Kazuo; and Miyoshi, Mituji, 4,371,679, Cl. 526-116.000.
Miyoshi, Takeshi: *See*—
Utagawa, Takashi; Miyoshi, Takeshi; Morisawa, Hirokazu; Yamazaki, Akihiro; Yoshinaga, Fumihiro; and Mitsugi, Koji, 4,371,613, Cl. 435-88.000.
Mizote, Masanori: *See*—
Yamaki, Kiyoshi; Mizote, Masanori; Takeda, Hitoshi; Suzuki, Hidetaka; Nomura, Hiroyuki; Kawasaki, Teruo; and Mori, Kazuyuki, 4,371,940, Cl. 364-444.000.
Mizuguchi, Hiroyuki: *See*—
Matsumoto, Kunio; Izumi, Rokuro; Seijo, Hideji; and Mizuguchi, Hiroyuki, 4,371,612, Cl. 435-44.000.
Mobil Oil Corporation: *See*—
Chu, Chin-Chiun, 4,371,457, Cl. 252-437.000.
Wu, Margaret M., 4,371,721, Cl. 568-750.000.
Young, Lewis B., 4,371,714, Cl. 568-628.000.
Molex Incorporated: *See*—
Funcik, Jack F.; Bennet, Joseph C.; Tubbs, Joseph T.; and Schneider, Thomas E., 4,370,806, Cl. 29-749.000.
Molins Limited: *See*—
DeAlto, Michael E.; DiGiacomo, Joseph D.; Marritt, Clifford R.; and Preston, Edward G., 4,370,908, Cl. 83-348.000.
Dowding, John G.; and Preston, Edward G., 4,370,942, Cl. 118-40.000.
Moller, Dieter; and Poth, Ulrich, to BASF Farben & Fasern AG. Baking lacquer. 4,371,667, Cl. 525-208.000.
Moller, George O.; and Twiford, Richard L., to International Telephone and Telegraph Corporation. Doughnut fryer guide. 4,370,921, Cl. 99-405.000.
Moller, Hinrich: *See*—
Rose, David; Moller, Hinrich; and Maak, Norbert, 4,371,370, Cl. 8-408.000.
Momose, Haruo: *See*—
Miwa, Kiyoshi; and Momose, Haruo, 4,371,615, Cl. 435-115.000.
Monaghan, Paul B.: *See*—
Grossman, Harold; Merrill, Richard E.; and Monaghan, Paul B., 4,371,632, Cl. 523-164.000.
Monigold, Ray A.; and Russell, William F. Collision resistant auxiliary fuel system. 4,371,181, Cl. 280-5.00A.
Monsanto Company: *See*—
Alt, Gerhard H.; and Chupp, John P., 4,371,717, Cl. 568-681.000.
D'Amico, John J., 4,371,388, Cl. 71-90.000.
Howe, Robert K.; and Lee, Len F., 4,371,389, Cl. 71-90.000.
Le Clair, Francis J.; and Surgant, John M., 4,371,390, Cl. 71-93.000.
Montagna, John C.; Galli, Robert D.; and Freel, John, to Gulf Research & Development Company. Separating vinyltoluene from other alkenylaromatics. 4,371,428, Cl. 203-51.000.
Montedison S.p.A.: *See*—
Di Battista, Piero; and Gratani, Francesco, 4,371,695, Cl. 546-190.000.
Monteil, Jean-Bruno: *See*—
Chamard, Alex; Dougier, Patrick; and Monteil, Jean-Bruno, 4,371,567, Cl. 427-130.000.
Montgomery, Gary V.; and McAlinden, Daniel P., to Sunbeam Plastics Corporation. One-piece child resistant closure. 4,371,095, Cl. 222-153.000.
Moore, Patrick D., to Milliken Research Corporation. Substituted cyclohexane-1,2-dicarboxylic anhydrides and epoxy resins containing same. 4,371,688, Cl. 528-112.000.
Moorehead, Eric L.: *See*—
Switzer, Jay A.; and Moorehead, Eric L., 4,371,431, Cl. 204-59.00R.
Moorhead, Albert B. Snake trap. 4,370,823, Cl. 43-7.000.
Moravcsik, Erno: *See*—
Urogdi, Laszlo; Patthy nee Lukats, Agnes; Kisfaludy, Lajos; Moravcsik, Erno; Tudos nee Feuer, Helga; Otvos, Laszlo; Tegyei, Zsuzsanna; Palosi, Eva; Sarkadi, Adam; and Szporny, Laszlo, 4,371,534, Cl. 424-248.550.
Mori, Kazuhiro: *See*—
Misawa, Yoshihiko; Kabeshita, Akira; Mori, Kazuhiro; Nakagawa, Hiroshi; and Araki, Shigeru, deceased, 4,370,804, Cl. 29-741.000.
Mori, Kazuyuki: *See*—
Yamaki, Kiyoshi; Mizote, Masanori; Takeda, Hitoshi; Suzuki, Hidetaka; Nomura, Hiroyuki; Kawasaki, Teruo; and Mori, Kazuyuki, 4,371,940, Cl. 364-444.000.
Morichika, Toshiaki: *See*—
Mihara, Takao; Morichika, Toshiaki; and Sone, Shigenori, 4,371,775, Cl. 219-121.0PK.
Morioka, Akitoshi: *See*—
Iwata, Hiroshi; Yoshino, Tsunemi; Kashihara, Toshitsugu; and Morioka, Akitoshi, 4,371,245, Cl. 354-198.000.
Morisawa, Hirokazu: *See*—
Utagawa, Takashi; Miyoshi, Takeshi; Morisawa, Hirokazu; Yamazaki, Akihiro; Yoshinaga, Fumihiro; and Mitsugi, Koji, 4,371,613, Cl. 435-88.000.
Morishita, Toshihiko: *See*—
Kashiwase, Kohji; Machino, Yasuo; Mita, Muneo; Hiramatsu, Tsunenosuke; Morishita, Toshihiko; and Taniguchi, Mitsuo, 4,371,656, Cl. 524-443.000.
Morningstar, Marion G.; and Doyle, Thomas J., to B.F. Goodrich Company, The. Process for making dispersion copolymers through monomer metering. 4,371,677, Cl. 526-80.000.
Moromura, Syoji: *See*—
Soma, Nobuo; Moromura, Syoji; Yoshioka, Takao; and Kurumada, Tomoyuki, 4,371,644, Cl. 524-102.000.
Morrill, Charles D.; and Best, Michael J. A., to Smith International, Inc. Protective cover for underwater flow line hub. 4,371,005, Cl. 138-89.000.
Morrill, Charles D.; Des Lierres, John M.; and Copeland, Louis E., to Smith International, Inc. Underwater flowline connector. 4,371,291, Cl. 405-169.000.
Morrill, Wayne J. Half-pitch capacitor induction motor. 4,371,802, Cl. 310-166.000.
Morris, Hayden; and Bis, Richard F., to United States of America, Navy. Process for preparing isolated junctions in thin-film semiconductors. 4,371,882, Cl. 357-4.000.
Morris, Stuart R.: *See*—
Henden, Derek J.; and Morris, Stuart R., 4,371,184, Cl. 280-204.000.
Morrison Company, Inc.: *See*—
Morrison, Donald; and Muma, William T., Jr., 4,371,580, Cl. 428-250.000.
Morrison, Donald; and Muma, William T., Jr., to Morrison Company, Inc. Three-ply belting material. 4,371,580, Cl. 428-250.000.
Morse, Theodore H., to Eastman Kodak Company. Electrographic method and apparatus providing improved transfer of non-insulative toner. 4,371,251, Cl. 355-3.0TR.
Mosbach, Erwin H.; McSherry, Charles K.; and Hylemon, Phillip B. Controlling micro-organisms. 4,371,528, Cl. 424-241.000.
Moser, Gottfried; and Gross, Hansjurgen, to Klockner-Humboldt-Deutz AG. Arrangement for heating the oil contained within an oil reservoir of a machine or of an internal combustion engine of a motor vehicle. 4,370,956, Cl. 123-196.0AB.
Moser, Robert; and Jungblut, Gottfried, to Swiss Aluminium Ltd. Device and process for operating an open baking furnace for manufacturing carbon-bearing, shaped bodies. 4,371,333, Cl. 432-3.000.
Mosto, James R.: *See*—
Chicklis, Evan P.; and Mosto, James R., 4,371,969, Cl. 372-77.000.
Motor Wheel Corporation: *See*—
Strader, Don S., 4,371,214, Cl. 301-126.000.
Motorola, Inc.: *See*—
Guzik, Andrzej T., 4,371,912, Cl. 361-417.000.
Hilbert, Francis H., 4,371,747, Cl. 179-1.0GS.
Medernach, John W.; Novak, Ivan A.; and Bush, Harry D., 4,371,598, Cl. 430-22.000.
Nash, Johnny R., 4,371,876, Cl. 343-768.000.
Moulthrop, Lawrence C.: *See*—
Balko, Edward N.; and Moulthrop, Lawrence C., 4,371,433, Cl. 204-228.000.
Moulton, Clifford H., to Palmguard, Inc. Method for analyzing stored image details. 4,371,865, Cl. 340-146.3MA.
Moyer, James D.; and Hoffert, Robert S., to Midwestco, Inc. Fabric tube forming methods and apparatus. 4,370,936, Cl. 112-10.000.
Muecke, Siegfried: *See*—
Boschulte, Rainer; Koehnecke, Heinrich; and Muecke, Siegfried, 4,371,831, Cl. 323-284.000.
Muehlberger, Erich, to Electro-Plasma, Inc. Fine particle filter system having low pressure drop for gaseous flow systems. 4,371,563, Cl. 427-34.000.
Mueller, Dieter: *See*—
Kerk, Klaus; Mueller, Dieter; and Oleiko, Bernd, 4,371,575, Cl. 428-81.000.

Muhlbauer, Gerhard; and Holler, Herbert, to Voest-Alpine Aktiengesellschaft. Adjustable carrying-tower arrangement for metallurgical vessels. 4,371,100, Cl. 222-591.000.
Mukai, Hideo: *See*—
Uchida, Kohachi; Nakatomi, Yoshitsugu; Takano, Toshimasa; and Mukai, Hideo, 4,371,252, Cl. 355-3.0CH.
Mulcahy, Harry W., to AMSTED Industries Incorporated. Railway car truck bolster assembly. 4,370,933, Cl. 105-197.0DB.
Mulder, Cornelis; Nederlof, Leendert; Niessen, Cornelis; Wijnhoven, Rene M. G.; and Salters, Roelof H. W., to U.S. Philips Corporation. Dynamic MOS-logic integrated circuit comprising a separate arrangement of combinatory and sequential logic elements. 4,371,795, Cl. 307-440.000.
Muller, Alfred; Schwab, Manfred; and Stroh, Walter, to Robert Bosch GmbH. Method and apparatus for controlling the torque of an internal combustion engine. 4,370,904, Cl. 74-858.000.
Muller, Jean-Marie A.: *See*—
Boyer, Gerard A. M.; Duvdevani, Ilan; and Muller, Jean-Marie A., 4,371,641, Cl. 524-70.000.
Muller, Karl-Hans; and Barthel, Walter, to Degussa Aktiengesellschaft. Mastic asphalt composition. 4,371,400, Cl. 106-273.00R.
Muller, Michael, to Apple Computer, Inc. Keyboard switch having combined actuator and jumper contact structure. 4,371,760, Cl. 200-5.00A.
Muller, Rolf, to Papst-Motoren KG. Brushless, permanent magnet d-c pulse current controlled, essentially uniform torque dynamo electric machine, particularly motor. 4,371,817, Cl. 318-254.000.
Mullersman, Ferdinand H.; and Scholefield, Clifford L., to General Electric Company. Battery charger with indicator for indicating full charge of secondary cells or battery thereof. 4,371,827, Cl. 320-48.000.
Multifastener Corporation: *See*—
Bien, Alfred A.; and Heidt, Frederick W., 4,370,794, Cl. 29-509.000.
Muma, William T., Jr.: *See*—
Morrison, Donald; and Muma, William T., Jr., 4,371,580, Cl. 428-250.000.
Mundus, Friedhelm, to Windmoller & Holscher. Apparatus for applying transverse weld or weld-severing seams to a web of thermoplastic or hot-sealable material. 4,371,413, Cl. 156-349.000.
Munn, Fred O. Universal latch-lock assembly. 4,370,874, Cl. 70-204.000.
Munro, Donald C. Universal beam clamp. 4,371,203, Cl. 294-86.00R.
Munro, James A., to Sperry Corporation. Agricultural balers. 4,370,924, Cl. 100-189.000.
Munzenmaier, Wolfgang; Eggensperger, Heinz; Ehlers, Helmut H.; Beilfuss, Wolfgang; Bucklers, Lothar; and Harke, Hans-Peter, to Sterling Drug Inc. 2-Benzylideneglutaraldehydes useful as disinfectants. 4,371,547, Cl. 424-333.000.
Mura, Alojzy: *See*—
Karowiec, Krzysztof; Sedlaczek, Janusz; Mura, Alojzy; Pawelczyk, Jerzy; and Skrzypiec, Zbigniew, 4,371,477, Cl. 261-30.000.
Muraki, Masayoshi: *See*—
Horita, Yoshiharu; Fujimoto, Kenichi; Hoshino, Michio; Takito, Tetsuo; and Muraki, Masayoshi, 4,371,726, Cl. 585-3.000.
Murakoshi, Makoto: *See*—
Oosaka, Shigenori; and Murakoshi, Makoto, 4,371,239, Cl. 353-26.00R.
Muranaka, Shigeo; Sugihara, Kunihiko; and Takeuchi, Kiyoshi, to Nissan Motor Company, Limited. Spark ignition timing control system for an internal combustion engine. 4,370,964, Cl. 123-425.000.
Murao, Yoshio. Clearer device provided above draft rolls. 4,370,781, Cl. 19-245.000.
Murata, Moriyoshi, to Tokyo Shibaura Denki Kabushiki Kaisha. Method of manufacturing electrode supporting base plate for radiation detector. 4,371,492, Cl. 264-226.000.
Murayama, Akira; Harada, Fumio; Arata, Tetsuya; Itagaki, Masato; Nakayama, Susumu; and Sofue, Masahisa, to Hitachi, Ltd. Hermetic motor compressor. 4,371,319, Cl. 417-312.000.
Murfitt, Donald: *See*—
Wang, James C.; Murfitt, Donald; Livingston, Paul H.; and Joson, Luis K., 4,371,194, Cl. 281-21.00R.
Wang, James C.; Murfitt, Donald; and Livingston, Paul H., 4,371,195, Cl. 281-21.00R.
Murphy Door Bed Company, Inc.: *See*—
Teague, W. Dorwin, Jr., 4,370,766, Cl. 5-133.000.
Murphy, John J.; Petro, John; and Unglert, Melvin C., to Westinghouse Electric Corp. Single turret machine for fabricating high-intensity discharge arc tubes. 4,371,224, Cl. 316-32.000.
Muszynski, Larry C., to Shell Oil Company. Polyester polymer concrete compositions. 4,371,639, Cl. 523-512.000.
Muta, Natsuo; and Kanamaru, Toshihisa, to Saibu Gas Co. Ltd.; and Kabushiki Kaisha Kankyo Kaihatsu. Method for reinforcing and repairing piping. 4,371,569, Cl. 427-230.000.
Muth, Myron C.: *See*—
Schilke, Peter W.; Muth, Myron C.; Schilling, William F.; and Rairden, John R., III, 4,370,789, Cl. 29-156.80H.
Mylonakis, Stamatios G.; and Tortorello, Anthony J., to DeSoto, Inc. Polymers having improved water resistance and monomers for same. 4,371,669, Cl. 526-311.000.
Nabisco Brands, Inc.: *See*—
Cherukuri, Subraman R.; Friello, Dominick R.; Parker, Ellery; Hopkins, Walter; and Mackay, Donald A. M., 4,371,549, Cl. 426-3.000.
Naf, Ferdinand; Decorzant, Rene; and Schulte-Elte, Karl H., to Firmenich SA. Bicyclic compounds and utilization thereof as perfuming agents. 4,371,460, Cl. 252-522.00R.
Nagashima, Yoshiaki; Kimura, Yoshiomi; and Hashimoto, Naoki, to Kirin Beer Kabushiki Kaisha. Process for brewing beer. 4,371,550, Cl. 426-16.000.
Nagata, Koji; Nishikawa, Mamoru; and Sato, Shiro, to Sumitomo Light Metal Ind., Ltd. Apparatus for coating the inner surface of long tubes of small diameter. 4,370,944, Cl. 118-302.000.
Nagata, Shuji: *See*—
Suzuki, Yasuo; Nagata, Shuji; and Yasuda, Kazumi, 4,370,910, Cl. 83-876.000.
Nagatsu, Toshiharu; Kato, Takeshi; Yamaguchi, Tokio; Akino, Miki; Matsuura, Sadao; and Sugimoto, Takashi, to Daiichi Radioisotope Laboratories, Ltd. Radioimmunoassay of pterins and novel pterin derivatives useful therefor. 4,371,514, Cl. 424-1.000.
Naik, Kirit: *See*—
De, Bimal B.; Gierut, Lawrence G.; Krakau, Herbert B.; Naik, Kirit; and Tan-Atichat, Eddie, 4,371,754, Cl. 179-18.0EE.
Nakagaki, Noboru; and Fujikawa, Hroaki, to Takeda Lace Co. Ltd. Warp knitted narrow lace and process for preparation thereof. 4,370,871, Cl. 66-202.000.
Nakagawa, Hiroshi: *See*—
Misawa, Yoshihiko; Kabeshita, Akira; Mori, Kazuhiro; Nakagawa, Hiroshi; and Araki, Shigeru, deceased, 4,370,804, Cl. 29-741.000.
Nakagawa, Yukio: *See*—
Matsukura, Tadaaki; and Nakagawa, Yukio, 4,371,470, Cl. 260-428.000.
Nakahara, Yutaka: *See*—
Minagawa, Motonobu; and Nakahara, Yutaka, 4,371,646, Cl. 524-119.000.
Minagawa, Motonobu; Nakahara, Yutaka; and Tobita, Etsuo, 4,371,647, Cl. 524-120.000.
Nakaido, Shigehiro: *See*—
Ikeda, Hironosuke; Narukawa, Satoshi; and Nakaido, Shigehiro, 4,371,597, Cl. 429-153.000.
Nakamura, Hiroya, to Konishiroku Photo Industry Co., Ltd. Composite information recording apparatus. 4,371,898, Cl. 358-300.000.
Nakamura, Norihiko; and Kato, Takashi, to Toyota Jidosha Kogyo Kabushiki Kaisha. Variable venturi carburetor. 4,371,479, Cl. 261-44.00C.
Nakamura, Seiji: *See*—
Yoshizawa, Kiyoshi; Otsuka, Kenichi; Nojiro, Kikuo; Koizumi, Takeo; Mitsutomi, Katsuyoshi; and Nakamura, Seiji, 4,371,440, Cl. 210-601.000.
Nakamura, Toru: *See*—
Kuroda, Nobuyuki; Sano, Akira; Nakamura, Toru; Matsuura, Kazuo; and Miyoshi, Mituji, 4,371,679, Cl. 526-116.000.
Nakanishi Dental Mfg. Co. Ltd.: *See*—
Nakanishi, Takasuke, 4,371,341, Cl. 433-118.000.
Nakanishi, Ichiro: *See*—
Sugiyama, Masatoshi; Nakanishi, Ichiro; Ogawa, Akira; and Maekawa, Masakazu, 4,371,582, Cl. 428-341.000.
Nakanishi, Takasuke, to Nakanishi Dental Mfg. Co. Ltd. Dental handpiece. 4,371,341, Cl. 433-118.000.
Nakano, Yoshimasa: *See*—
Shinohara, Masanao; Nakano, Yoshimasa; Kaise, Hirotsugu; Izawa, Taketoshi; and Miyazaki, Wasei, 4,371,524, Cl. 424-180.000.
Nakano, Yoshio: *See*—
Foglia, Thomas A.; Perlstein, Theodore; Nakano, Yoshio; and Maerker, Gerhard, 4,371,469, Cl. 260-405.600.
Nakao, Yasutaka. Apparatus for conveying and closely gathering food. 4,371,076, Cl. 198-420.000.
Nakashima, Shozaburo: *See*—
Harase, Jiro; Takashima, Kunihide; and Nakashima, Shozaburo, 4,371,405, Cl. 148-111.000.
Nakatomi, Takayoshi, to Toyota Jidosha Kogyo Kabushiki Kaisha. Electronically controlled, fuel injection method. 4,370,968, Cl. 123-488.000.
Nakatomi, Yoshitsugu: *See*—
Uchida, Kohachi; Nakatomi, Yoshitsugu; Takano, Toshimasa; and Mukai, Hideo, 4,371,252, Cl. 355-3.0CH.
Nakayama, Susumu: *See*—
Murayama, Akira; Harada, Fumio; Arata, Tetsuya; Itagaki, Masato; Nakayama, Susumu; and Sofue, Masahisa, 4,371,319, Cl. 417-312.000.
Nanne, Johannes M.; and Post, Martin F. M., to Shell Oil Company. Process for the preparation of aromatic hydrocarbons using crystalline silicates as catalyst. 4,371,628, Cl. 518-713.000.
Narasaka, Shin: *See*—
Otsuka, Kazuo; Narasaka, Shin; and Hasegawa, Shumpei, 4,371,822, Cl. 318-696.000.
Narisada, Masayuki; and Okada, Tetsuo, to Shionogi & Co., Ltd. Malonamidooxadethiacephem compounds. 4,371,532, Cl. 424-248.510.
Narozny, Ronald S., to Thomas & Betts Corporation. Electrical connector for terminating flat multiconductor cable. 4,371,225, Cl. 339-97.00C.
Narukawa, Satoshi: *See*—
Ikeda, Hironosuke; Narukawa, Satoshi; and Nakaido, Shigehiro, 4,371,597, Cl. 429-153.000.
Nash, Johnny R., to Motorola Inc. Slot array antenna having a complex impedance termination and method of fabrication. 4,371,876, Cl. 343-768.000.
Nassl, Peter: *See*—
Dietrich, Karl-Heinz; Gruber, Josef; Rauffer, Walter; and Nassl, Peter, 4,371,242, Cl. 353-101.000.

National Research Development Corporation: *See—*
Palmer, John H. W.; and MacDonald, Alexander J. R., 4,371,345, Cl. 434-368.000.
National Semiconductor Corporation: *See—*
Dobkin, Robert C., 4,371,792, Cl. 307-255.000.
National Tax Administration Agency: *See—*
Yoshizawa, Kiyoshi; Otsuka, Kenichi; Nojiro, Kikuo; Koizumi, Takeo; Mitsutomi, Katsuyoshi; and Nakamura, Seiji, 4,371,440, Cl. 210-601.000.
Nauerth, Karl-Heinz: *See—*
Roller, Hanno; and Nauerth, Karl-Heinz, 4,371,777, Cl. 219-298.000.
Naylor, Carter G.: *See—*
McCoy, David R.; and Naylor, Carter G., 4,371,444, Cl. 252-8.55D.
Nazarenko, Nicholas, to Du Pont de Nemours, E. I., and Company. Flexible screen-printable conductor composition. 4,371,459, Cl. 252-514.000.
NCR Corporation: *See—*
Edwards, Gordon L., Jr.; and Smith, Walter A., 4,371,963, Cl. 371-50.000.
Schuck, David B., 4,371,952, Cl. 364-900.000.
NDM Corporation: *See—*
Cartmell, James V., 4,370,984, Cl. 128-640.000.
Nederlof, Leendert: *See—*
Mulder, Cornelis; Nederlof, Leendert; Niessen, Cornelis; Wijnhoven, Rene M. G.; and Salters, Roelof H. W., 4,371,795, Cl. 307-440.000.
Neef, Gunter: *See—*
Braestrup, Claus T.; Nielsen, Mogens C.; Christensen, Joergen A.; Engelstoft, Mogens; Schou, Henning; Eder, Ulrich; Neef, Gunter; Huth, Andreas; Rahtz, Dieter; and Schmiechen, Ralph, 4,371,536, Cl. 424-256.000.
Nelson, Dayle A. S.: *See—*
Oppy, Maureen A.; and Nelson, Dayle A. S., 4,371,557, Cl. 426-321.000.
Nelson, Wayne F., to A. Schulman, Inc. Modified ionomer blend and laminated article. 4,371,583, Cl. 428-358.000.
Neumann, Rainer: *See—*
Friedhofen, Gerhard; Serini, Volker; Neumann, Rainer; Freitag, Dieter; and Schwarz, Hans-Helmut, 4,371,691, Cl. 528-196.000.
Newart Electronic Sciences, Inc.: *See—*
Hilligoss, William R., Jr.; and Hilligoss, Lawrence O., 4,371,751, Cl. 179-5.00R.
Newkirk, David D.; Login, Robert B.; and Thir, Basil, to BASF Wyandotte Corporation. Mold release agents containing oxidation stable polyoxyalkylenes. 4,371,476, Cl. 260-709.000.
Nguyen-Dinh, Xuan: *See—*
Duhl, David N.; and Nguyen-Dinh, Xuan, 4,371,404, Cl. 148-3.000.
Nguyen Mong, Lan: *See—*
Bentzen, Craig L.; Nguyen Mong, Lan; and Niesor, Eric, 4,371,527, Cl. 424-204.000.
NHK Spring Co., Ltd.: *See—*
Ojima, Juji; and Yamamuro, Koichi, 4,371,360, Cl. 474-111.000.
Nicholson, Harold L., to Atlantic Richfield Company. Semi-continuous process for making star-block copolymers. 4,371,661, Cl. 525-53.000.
Nicholson, Margie M., to Rockwell International Corporation. Electrochromic display using rare-earth diphthalocyanines and a low freezing-point electrolyte. 4,371,236, Cl. 350-357.000.
Nickel, Bernd; and Schorr, Wolfgang, to Siemens Aktiengesellschaft. Device for measuring the location, attitude and/or change of location or, respectively attitude of a rigid body in space utilizing two sets of four parallel antennas for concentrating the field lines. 4,371,836, Cl. 324-207.000.
Nickel, Hans: *See—*
Schurr, Volker; Nickel, Hans; Hoppner, Klaus; Kohler, Gisbert; Weiss, Hermann; and Wieland, Dieter, 4,370,810, Cl. 30-382.000.
Nickum, James D.: *See—*
King, Dennis D.; Breitwisch, Ronald L.; and Nickum, James D., 4,371,981, Cl. 455-219.000.
Niederdellmann, Georg: *See—*
Quiring, Bernd; Niederdellmann, Georg; Goyert, Wilhelm; and Wagner, Hans, 4,371,684, Cl. 528-65.000.
Nieh, Edward C. Y., to Texaco Inc. Vanadium-cobalt corrosion inhibitor system for sour gas conditioning solutions. 4,371,450, Cl. 252-189.000.
Niehenke, Edward C.; Klein, Gerald I.; and Linsenbardt, Aldo E., to Westinghouse Electric Corp. Receiver protector with multi-level STC attenuation. 4,371,851, Cl. 333-17.00L.
Nielsen, Mogens C.: *See—*
Braestrup, Claus T.; Nielsen, Mogens C.; Christensen, Joergen A.; Engelstoft, Mogens; Schou, Henning; Eder, Ulrich; Neef, Gunter; Huth, Andreas; Rahtz, Dieter; and Schmiechen, Ralph, 4,371,536, Cl. 424-256.000.
Niemanns, Gerd, to Draftex Development A.G. Sealing arrangements in the form of strips. 4,370,833, Cl. 49-489.000.
Niesor, Eric: *See—*
Bentzen, Craig L.; Nguyen Mong, Lan; and Niesor, Eric, 4,371,527, Cl. 424-204.000.
Niessen, Cornelis: *See—*
Mulder, Cornelis; Nederlof, Leendert; Niessen, Cornelis; Wijnhoven, Rene M. G.; and Salters, Roelof H. W., 4,371,795, Cl. 307-440.000.
Nifco Inc.: *See—*
Watanabe, Koji, 4,371,123, Cl. 242-71.800.
Nihon Kaiheiki Kogyo Kabushiki Kaisha: *See—*
Ohashi, Shigeo; and Suga, Hiroyuki, 4,371,767, Cl. 200-335.000.
Nii, Yoshiji: *See—*
Andow, Fumio; Kobayashi, Takayuki; Kondow, Ryotaro; and Nii, Yoshiji, 4,371,908, Cl. 361-83.000.
Nimry, Tayseer S.: *See—*
Fields, Ellis K.; and Nimry, Tayseer S., 4,371,701, Cl. 549-235.000.
Nippon Chemical Industrial Co., Ltd.: *See—*
Kashiwase, Kohji; Machino, Yasuo; Mita, Muneo; Hiramatsu, Tsunenosuke; Morishita, Toshihiko; and Taniguchi, Mitsuo, 4,371,656, Cl. 524-443.000.
Nippon Electric Co., Ltd.: *See—*
Koga, Toshio, 4,371,895, Cl. 358-136.000.
Nippon Gakki Seizo Kabushiki Kaisha: *See—*
Yokoyama, Kenji, 4,371,840, Cl. 330-10.000.
Nippon Kogaku K.K.: *See—*
Daitoku, Koichi; Sekine, Kenji; Matsukawa, Nobuo; and Sugimori, Shiro, 4,371,244, Cl. 354-173.000.
Nippon Oil Company, Ltd.: *See—*
Kuroda, Nobuyuki; Sano, Akira; Nakamura, Toru; Matsuura, Kazuo; and Miyoshi, Mituji, 4,371,679, Cl. 526-116.000.
Nippon Soken, Inc.: *See—*
Kago, Yoshiyuki; Akita, Sigeyuki; and Fujikawa, Katsuhisa, 4,371,835, Cl. 324-174.000.
Shimogawa, Toshiaki; Ando, Takayuki; and Kuwakado, Satosi, 4,371,127, Cl. 242-107.200.
Nippon Steel Chemical Co., Ltd.: *See—*
Horita, Yoshiharu; Fujimoto, Kenichi; Hoshino, Michio; Takito, Tetsuo; and Muraki, Masayoshi, 4,371,726, Cl. 585-3.000.
Nippon Steel Corporation: *See—*
Harase, Jiro; Takashima, Kunihide; and Nakashima, Shozaburo, 4,371,405, Cl. 148-111.000.
Suzuki, Yasuo; Nagata, Shuji; and Yasuda, Kazumi, 4,370,910, Cl. 83-876.000.
Nishi, Masataka: *See—*
Ando, Toshinari; Nishi, Masataka; Shimamoto, Susumu; Yoshida, Hiromichi; Suzumura, Takashi; Kakizaki, Kimio; Yamagishi, Ryozo; and Ogata, Hisanao, 4,371,741, Cl. 174-15.00S.
Nishikawa, Mamoru: *See—*
Nagata, Koji; Nishikawa, Mamoru; and Sato, Shiro, 4,370,944, Cl. 118-302.000.
Nishikawa, Masaji, to Olympus Optical Company Limited. Automatic controller of electrification of magnetic toner. 4,371,257, Cl. 355-14.00D.
Nishizawa, Junichi, to Zaidan Hojin Handotai Kenkyu Shinkokai. Dry etching apparatus. 4,371,412, Cl. 156-345.000.
Nissan Motor Company, Limited: *See—*
Fujioka, Kazuyoshi; and Ikkatai, Mitsuo, 4,371,066, Cl. 192-85.0AA.
Hosaka, Akio, 4,370,962, Cl. 123-416.000.
Ikeura, Kenji, 4,371,050, Cl. 180-271.000.
Kawasaki, Teruo; Nomura, Hiroyuki; and Takeuchi, Mikio, 4,371,864, Cl. 340-62.000.
Muranaka, Shigeo; Sugihara, Kunihiko; and Takeuchi, Kiyoshi, 4,370,964, Cl. 123-425.000.
Yamaki, Kiyoshi, 4,371,935, Cl. 364-424.000.
Yamaki, Kiyoshi; Mizote, Masanori; Takeda, Hitoshi; Suzuki, Hidetaka; Nomura, Hiroyuki; Kawasaki, Teruo; and Mori, Kazuyuki, 4,371,940, Cl. 364-444.000.
Yamane, Ken, 4,371,219, Cl. 384-291.000.
Nissan Motor Co., Ltd., No. 2: *See—*
Koike, Shouichi, 4,370,832, Cl. 49-488.000.
Nissin Kogyo Kabushiki Kaisha: *See—*
Seki, Masayuki, 4,371,059, Cl. 188-71.800.
Noel, Stephane, to Solvay & Cie. Process for rapidly terminating the polymerization of vinyl chloride in aqueous suspension. 4,371,678, Cl. 526-83.000.
Nojiro, Kikuo: *See—*
Yoshizawa, Kiyoshi; Otsuka, Kenichi; Nojiro, Kikuo; Koizumi, Takeo; Mitsutomi, Katsuyoshi; and Nakamura, Seiji, 4,371,440, Cl. 210-601.000.
Nomura, Hiroyuki: *See—*
Kawasaki, Teruo; Nomura, Hiroyuki; and Takeuchi, Mikio, 4,371,864, Cl. 340-62.000.
Yamaki, Kiyoshi; Mizote, Masanori; Takeda, Hitoshi; Suzuki, Hidetaka; Nomura, Hiroyuki; Kawasaki, Teruo; and Mori, Kazuyuki, 4,371,940, Cl. 364-444.000.
Noordvos Schroeven B.V.: *See—*
Vos, Geert H., 4,371,480, Cl. 261-87.000.
Nordson Corporation: *See—*
Scholl, Charles H.; and Frates, Paul S., 4,371,096, Cl. 222-190.000.
Northern Telecom Limited: *See—*
Debortoli, George; Meyerstein, Michael V.; and Velsher, Benne, 4,371,757, Cl. 179-98.000.
Northrop Corporation: *See—*
Cushman, Glenn F., 4,371,921, Cl. 364-138.000.
Norwood Minerals, Inc.: *See—*
Dick, Perry J., Jr., 4,371,376, Cl. 44-10.00R.
Nouvel, Jacques: *See—*
de Soyres, Bruno; and Nouvel, Jacques, 4,371,471, Cl. 260-438.50R.
Novak, Ivan A.: *See—*
Medernach, John W.; Novak, Ivan A.; and Bush, Harry D., 4,371,598, Cl. 430-22.000.
Novak, Peter: *See—*
Briner, Emil; and Novak, Peter, 4,370,850, Cl. 57-96.000.
Novo Industri A/S: *See—*
Posorske, Laurence H., 4,371,552, Cl. 426-50.000.

Nowotka, Paul G.: *See—*
von Schneidemesser, Christian; Nowotka, Paul G.; and Rudel, Gerhard, 4,370,835, Cl. 51-165.770.
Nozawa, Takamitsu; Kishi, Takao; and Hinokiyama, Minoru, to Yoshino Kogyosho Co., Ltd. Atomizer usable in both normal and inverted orientations. 4,371,098, Cl. 222-321.000.
NTN Toyo Bearing Co., Ltd.: *See—*
Saruta, Masahiro; and Uchiyama, Hiroki, 4,370,966, Cl. 123-447.000.
Numata, Katuhisa: *See—*
Hamada, Kaduto; Takata, Zitumi; and Numata, Katuhisa, 4,371,487, Cl. 264-49.000.
O. G. Hoyer A/S: *See—*
Degn, Kaj; and Waldstrom, Ejvind, 4,370,844, Cl. 53-546.000.
Oana, Yoshinori: *See—*
Kamiyama, Kiichi; and Oana, Yoshinori, 4,371,237, Cl. 351-245.000.
Obermayer, Bertram: *See—*
Skatsche, Othmar; Wagner, Johann; and Obermayer, Bertram, 4,370,957, Cl. 123-196.0AB.
Oberstrass, Detley, to Barmag Barmer Maschinenfabrik AG. Yarn false twisting apparatus having adjustable friction discs. 4,370,851, Cl. 57-340.000.
Oberstrass, Detley; Hartig, Wolfgang; and Weber, Klaus, to Barmag Barmer Maschinenfabrik AG. Friction false twisting apparatus. 4,370,852, Cl. 57-340.000.
O'Brian, Edward D. Psychographs with sound producing members. 4,371,167, Cl. 273-161.000.
Odendaal, David F., to Gold Fields Mining and Development Limited. Underground rock chutes. 4,371,289, Cl. 405-150.000.
Oertle, Jakob: *See—*
Sedlacek, Franz; Oertle, Jakob; and Cebulla, Dietrich, 4,371,115, Cl. 239-524.000.
Off, Joseph W. A.; Early, Judson H.; Roady, Daniel K.; and Thayer, Theodore B., to Haggar Company. Transport system for automatic pocket implantation apparatus. 4,371,074, Cl. 198-339.000.
Ogarek, Bernard C.; and Heisterberg, Milton W., to GATX Tank Erection Corporation. Secondary seal for floating roof storage tank. 4,371,090, Cl. 220-224.000.
Ogata, Hisanao: *See—*
Ando, Toshinari; Nishi, Masataka; Shimamoto, Susumu; Yoshida, Hiromichi; Suzumura, Takashi; Kakizaki, Kimio; Yamagishi, Ryozo; and Ogata, Hisanao, 4,371,741, Cl. 174-15.00S.
Ogawa, Akira: *See—*
Sugiyama, Masatoshi; Nakanishi, Ichiro; Ogawa, Akira; and Maekawa, Masakazu, 4,371,582, Cl. 428-341.000.
Ogawa, Masao: *See—*
Honda, Toshio; Fukuura, Yukio; Ishikawa, Hikaru; Kojima, Shozo; Tanuma, Itsuo; and Ogawa, Masao, 4,371,411, Cl. 156-281.000.
Ogawa, Masaru: *See—*
Kikuchi, Toshiro; Ogawa, Masaru; and Ando, Makoto, 4,371,620, Cl. 435-189.000.
Ogden, Dennis H., to British Industrial Plastics Limited. Method of filling the cavity of a building block with an aminoplast resin foam involving reduced adhesion of the resin to the filling apparatus. 4,371,486, Cl. 264-46.600.
Ogihara, Masuo; Shinozaki, Nobuo; Ishikawa, Tadashi; and Seki, Yoichi, to Seiko Koki Kabushiki Kaisha. Time detecting device for alarm clock. 4,371,267, Cl. 368-74.000.
Ogino, Takashi: *See—*
Takaya, Takao; Masugi, Takashi; Ogino, Takashi; and Tsuji, Kiyoshi, 4,371,531, Cl. 424-246.000.
Ogletree, Robert H., to Southwire Company. Technique for adding lead to steel. 4,371,395, Cl. 75-129.000.
Ohara, Tsunemasa; and Yamamichi, Masayoshi, to Canon Kabushiki Kaisha. Battery accommodating device. 4,371,594, Cl. 429-97.000.
Ohashi, Shigeo; and Suga, Hiroyuki, to Nihon Kaiheiki Kogyo Kabushiki Kaisha. Small-sized switch. 4,371,767, Cl. 200-335.000.
Ohashi, Takehisa; Shimazaki, Masami; Kan, Kazunori; Kondo, Hideo; and Watanabe, Kiyoshi, to Kanegafuchi Chemical Industry Co., Ltd. Process for preparation of optically active N-mercaptoalkanoylamino acids. 4,371,699, Cl. 548-201.000.
Ohata, Yasufumi: *See—*
Uchikawa, Fusaoki; Tanaka, Hideharu; Sekiya, Mutsuo; and Ohata, Yasufumi, 4,371,581, Cl. 428-304.400.
Ohbayashi, Keiji: *See—*
Kajiwara, Makoto; Miyamoto, Akihiko; Ohbayashi, Keiji; and Iwagaki, Masaru, 4,371,609, Cl. 430-373.000.
Ohkubo, Kiyokazu, to Honda Giken Kogyo Kabushiki Kaisha. Clutch operating device. 4,371,062, Cl. 192-3.610.
Ohno, Mitio: *See—*
Takeichi, Hitoshi; Furuhata, Hiroshi; Kanno, Ryoichi; Kodaira, Kuniyasu; Ohno, Mitio; and Matumoto, Hirozi, 4,370,985, Cl. 128-663.000.
Ohsaki, Kozo; Hirokawa, Kazuo; Fukuda, Goro; Otsuka, Kozi; and Tomita, Tadayoshi, to Toyo Engineering Corporation. Process for hydrocarbon reforming and apparatus therefor. 4,371,452, Cl. 252-373.000.
Ojima, Juji; and Yamamuro, Koichi, to NHK Spring Co., Ltd. Locking mechanism in tension providing device. 4,371,360, Cl. 474-111.000.
Okabe, Moisei: *See—*
Kanamaru, Hisanobu; Okabe, Moisei; Tatsumi, Hideo; and Tohkairin, Akira, 4,370,793, Cl. 29-446.000.
Okada, Tetsuo: *See—*
Narisada, Masayuki; and Okada, Tetsuo, 4,371,532, Cl. 424-248.510.
Okamoto, Eiichi: *See—*
Yamaura, Mitsuru; Kondow, Ryotaro; Inagaki, Junichi; and Okamoto, Eiichi, 4,371,926, Cl. 364-200.000.
Okamura, Masatohsi; and Tanaka, Kimio, to TDK Electronics Co., Ltd. Magnetic tape cassette. 4,371,131, Cl. 242-199.000.
Okamura, Masatoshi; and Shiba, Haruo, to TDK Electronics Co., Ltd. Tapping boss of magnetic tape cassette. 4,371,286, Cl. 403-407.000.
Okazaki, Seiji: *See—*
Yoshimoto, Takeshi; Hiraoka, Hideki; Okazaki, Seiji; Taniguchi, Yoshihiro; and Harada, Tsutomu, 4,371,260, Cl. 355-77.000.
Okazaki, Tethuharu; Komukai, Takeo; and Uchikuga, Saburo, to Sogo Pharmaceutical Co. Ltd. Process for preparing cysteamine-S-substituted compounds and derivatives thereof. 4,371,472, Cl. 260-453.0RY.
Oleiko, Bernd: *See—*
Kerk, Klaus; Mueller, Dieter; and Oleiko, Bernd, 4,371,575, Cl. 428-81.000.
Olsen, John H., to Flow Industries, Inc. Check valve assembly. 4,371,001, Cl. 137-512.300.
Olympus Optical Company Limited: *See—*
Nishikawa, Masaji, 4,371,257, Cl. 355-14.00D.
O'Neill, Charles R. Water-powered, rotary head shaver. 4,370,807, Cl. 30-41.500.
O'Neill, Richard K., to Diamond International Corporation. Liquid dispensing pump. 4,371,097, Cl. 222-321.000.
Ono, Mikiya: *See—*
Inukai, Takao; Fukuda, Yoshiaki; and Ono, Mikiya, 4,371,484, Cl. 264-44.000.
Ookawa, Kiyoshi: *See—*
Iwata, Toshio; and Ookawa, Kiyoshi, 4,370,963, Cl. 123-425.000.
Oosaka, Shigenori; and Murakoshi, Makoto, to Fuji Photo Film Co., Ltd. Film positioning device for microform printing system. 4,371,239, Cl. 353-26.00R.
Oppy, Maureen A.; and Nelson, Dayle A. S., to General Foods Corporation. Maintenance of protein quality in foods containing reducing sugars. 4,371,557, Cl. 426-321.000.
Opto-System AB: *See—*
Magner, Bengt, 4,371,281, Cl. 403-219.000.
Oreglio, Maurizio: *See—*
Zingrini, Carlo; and Oreglio, Maurizio, 4,371,083, Cl. 211-26.000.
Orthwein, William C. Anti-buckling device for mine-roof bolting machines. 4,371,040, Cl. 173-11.000.
Osborn, Richard W.: *See—*
Giles, Duane D.; and Osborn, Richard W., 4,371,328, Cl. 425-344.000.
Oshima, Takao: *See—*
Hino, Minoru; and Oshima, Takao, 4,371,665, Cl. 525-109.000.
Ostbergs Fabriks AB: *See—*
Lindblom, Karl T., 4,371,017, Cl. 144-3.00D.
Otis Engineering Corporation: *See—*
Abernathy, William L.; Bertram, Billy B.; Davis, Anthony D.; and Ward, Richard M., 4,371,038, Cl. 166-380.000.
Otsuka, Kazuo; Narasaka, Shin; and Hasegawa, Shumpei, to Honda Motor Co., Ltd. Control device for pulse motors, having a fail safe function. 4,371,822, Cl. 318-696.000.
Otsuka, Kazutoshi, to Toyo Kogyo Co., Ltd. Engine speed control system. 4,370,960, Cl. 123-339.000.
Otsuka, Kenichi: *See—*
Yoshizawa, Kiyoshi; Otsuka, Kenichi; Nojiro, Kikuo; Koizumi, Takeo; Mitsutomi, Katsuyoshi; and Nakamura, Seiji, 4,371,440, Cl. 210-601.000.
Otsuka, Kozi: *See—*
Ohsaki, Kozo; Hirokawa, Kazuo; Fukuda, Goro; Otsuka, Kozi; and Tomita, Tadayoshi, 4,371,452, Cl. 252-373.000.
Otsuka Pharmaceutical Co., Ltd.: *See—*
Shinohara, Masanao; Nakano, Yoshimasa; Kaise, Hirotsugu; Izawa, Taketoshi; and Miyazaki, Wasei, 4,371,524, Cl. 424-180.000.
Ott, Helmut, to Herion-Werke KG. Sealing arrangement, particularly for sealing valve piston relative to valve housing. 4,371,178, Cl. 277-154.000.
Otten, David: *See—*
Wilson, Gerald L.; and Otten, David, 4,371,832, Cl. 324-51.000.
Ottewell, Gerald A., to Lucas Industries Limited. Brake shoes for railway disc brakes. 4,371,061, Cl. 188-244.000.
Otvos, Laszlo: *See—*
Urogdi, Laszlo; Patthy nee Lukats, Agnes; Kisfaludy, Lajos; Moravcsik, Erno; Tudos nee Feuer, Helga; Otvos, Laszlo; Tegyei, Zsuzsanna; Palosi, Eva; Sarkadi, Adam; and Szporny, Laszlo, 4,371,534, Cl. 424-248.550.
Outboard Marine Corporation: *See—*
Blanchard, Clarence E., 4,371,348, Cl. 440-52.000.
Van de Walker, Peter G., 4,370,953, Cl. 123-55.0VS.
Owens-Illinois, Inc.: *See—*
Bower, Thomas E.; and Aust, John J., 4,371,366, Cl. 493-138.000.
Oxenreider, Terry R.; and Bush, Herbert A., Jr., to General Battery Corporation. Manifold vented battery cover. 4,371,591, Cl. 429-88.000.
Oy Wartsila AB: *See—*
Piiroinen, Paavo, 4,370,875, Cl. 70-422.000.
Oyama, Hiroshi: *See—*
Ando, Shizuka; Oyama, Hiroshi; and Yamaguchi, Toshio, 4,370,764, Cl. 4-443.000.
P C U K Produits Chimiques Ugine Kuhlmann: *See—*
Alicot, Michel J. C.; and Tignol, Adrien P. N., 4,371,698, Cl. 548-177.000.

Paco Packaging Incorporated: *See—*
Haines, Russell R., 4,371,080, Cl. 206-531.000.
Page, Edward H.: *See—*
Scotti, Frank; and Page, Edward H., 4,371,451, Cl. 252-305.000.
Pako Corporation: *See—*
Kaufmann, Kenneth M., 4,371,819, Cl. 318-341.000.
Palmer, John H. W.; and MacDonald, Alexander J. R., to National Research Development Corporation. Multi-dimensional display equipment. 4,371,345, Cl. 434-368.000.
Palmguard, Inc.: *See—*
Moulton, Clifford H., 4,371,865, Cl. 340-146.3MA.
Palosi, Eva: *See—*
Urogdi, Laszlo; Patthy nee Lukats, Agnes; Kisfaludy, Lajos; Moravcsik, Erno; Tudos nee Feuer, Helga; Otvos, Laszlo; Tegyei, Zsuzsanna; Palosi, Eva; Sarkadi, Adam; and Szporny, Laszlo, 4,371,534, Cl. 424-248.550.
Palumbo, Pasquale M. Knee brace. 4,370,978, Cl. 128-80.00C.
Paly, Alexandr G.: *See—*
Kopysky, Boris D.; Dmitriev, Viktor D.; Khaustov, Georgy I.; Brodsky, Viktor M.; Surzhikov, Vitaly A.; Semenov, Evgeny I.; Chus, Vladimir G.; Misjulya, Viktor A.; Kandyba, Leonid F.; Ivanov, Igor P.; Bezzub, Grigory I.; Goldenberg, Yasha F.; Zonnenberg, Ilya S.; Paly, Alexandr G.; and Malkin, Arkady S., 4,370,879, Cl. 72-377.000.
Panametrics, Inc.: *See—*
Pedersen, Norman E., 4,371,785, Cl. 250-343.000.
Panelgraphic Corporation: *See—*
Russell, Raymond J., 4,371,566, Cl. 427-53.100.
Pannell, Robert T. Material handling apparatus. 4,371,305, Cl. 414-300.000.
Paoletti, Ugo: *See—*
Benai, Tommaso; Leoncini, Novello; and Paoletti, Ugo, 4,371,491, Cl. 264-196.000.
Papineau, Ronald I., to Unique Energy Systems, Inc. Apparatus for generating hydrogen. 4,371,500, Cl. 422-115.000.
Pappalardo, Massimo: *See—*
Assenza, Donello; and Pappalardo, Massimo, 4,370,785, Cl. 29-25.350.
Papst, Georg: *See—*
Burgbacher, Martin; Harmsen, Siegfried; and Papst, Georg, 4,371,313, Cl. 415-215.000.
Papst-Motoren KG: *See—*
Muller, Rolf, 4,371,817, Cl. 318-254.000.
Papst-Motoren K.G.: *See—*
Burgbacher, Martin; Harmsen, Siegfried; and Papst, Georg, 4,371,313, Cl. 415-215.000.
Paraho Corporation: *See—*
Jones, John B., 4,371,335, Cl. 432-95.000.
Parfree, Colin S.; and Worthington, Peter, to International Standard Electric Corporation. Submarine optical cable. 4,371,234, Cl. 350-96.230.
Paris, Philippe Y. J.; and Couturier, Alain, to Le Materiel Telephonique Thomson-CSF. Process and systems for the electronic generation of wide-angle moving images for training in the navigation of ships. 4,371,343, Cl. 434-29.000.
Parker, Ellery: *See—*
Cherukuri, Subraman R.; Friello, Dominick R.; Parker, Ellery; Hopkins, Walter; and Mackay, Donald A. M., 4,371,549, Cl. 426-3.000.
Parrella, Alfred T.: *See—*
Gordiski, Ronald J.; Bennett, Robert G., Jr.; Parrella, Alfred T.; and Bagnall, Michael, 4,371,941, Cl. 364-475.000.
Parrish, William J.; and Gates, James L., to Hughes Aircraft Company. Charge coupled device improved meander channel serial register. 4,371,885, Cl. 357-24.000.
Patent-Treuhand-Gesellschaft fuer elektrische Gluhlampen mbH: *See—*
Geissler, Udo M., 4,371,811, Cl. 315-241.00P.
Patent-Treuhand-Gesellschaft fur Elektrische Gluhlampen mbH: *See—*
Eckhardt, Fritz, 4,371,807, Cl. 313-318.000.
Patthy nee Lukats, Agnes: *See—*
Urogdi, Laszlo; Patthy nee Lukats, Agnes; Kisfaludy, Lajos; Moravcsik, Erno; Tudos nee Feuer, Helga; Otvos, Laszlo; Tegyei, Zsuzsanna; Palosi, Eva; Sarkadi, Adam; and Szporny, Laszlo, 4,371,534, Cl. 424-248.550.
Pautrot, Jean-Marc, to Rhone-Poulenc Industries. Process for the recovery of uranium contained in an impure phosphoric acid. 4,371,505, Cl. 423-10.000.
Pawelczyk, Jerzy: *See—*
Karowiec, Krzysztof; Sedlaczek, Janusz; Mura, Alojzy; Pawelczyk, Jerzy; and Skrzypiec, Zbigniew, 4,371,477, Cl. 261-30.000.
Paxson, Timm E.; Kim, Leo; and Van Aken, Andre B., to Shell Oil Company. β-(Sec-alkoxy) ethanol process. 4,371,716, Cl. 568-678.000.
Peach, James M.: *See—*
Gregory, George K. E.; Peach, James M.; and Du Mayne, James D., 4,371,516, Cl. 424-22.000.
Pedersen, Norman E., to Panametrics, Inc. Method and apparatus for detection and analysis of fluids. 4,371,785, Cl. 250-343.000.
Pekerman, Gary M.: *See—*
Sysolin, Petr V.; Zaitsev, Ivan I.; Pekerman, Gary M.; Kurzov, Jury P.; Tompakov, Alexandr E.; Maljuchenkov, Valery A.; and Kabachenko, Alexandr S., 4,371,004, Cl. 137-899.000.
Peng, Yuchi P.; Huntzinger, Gerald O.; and Hallmann, Melvin H., to General Motors Corporation. Piezoelectric knock sensor. 4,371,804, Cl. 310-321.000.
Pennzoil Company: *See—*
Sardisco, John B.; and Drechsel, Erhart K., 4,371,512, Cl. 423-551.000.
Pepper, William, Jr., to Peptek, Incorporated. Edge terminations for impedance planes. 4,371,746, Cl. 178-18.000.
Peptek, Incorporated: *See—*
Pepper, William, Jr., 4,371,746, Cl. 178-18.000.
Perlstein, Theodore: *See—*
Foglia, Thomas A.; Perlstein, Theodore; Nakano, Yoshio; and Maerker, Gerhard, 4,371,469, Cl. 260-405.600.
Pernet, Andre G.: *See—*
Plattner, Jacob J.; Pernet, Andre G.; and Fung, Anthony K., 4,371,546, Cl. 424-330.000.
Pernosky, Richard J. Home heating system employing water heater as heating source. 4,371,111, Cl. 237-8.00R.
Perobelli, Aldo: *See—*
Pessina, Giorgio; and Perobelli, Aldo, 4,371,156, Cl. 270-54.000.
Perolls, Roland F.; and Steel, Norman R. Methods of and apparatus for closing bag mouths. 4,370,845, Cl. 53-572.000.
Persson, Gert A.: *See—*
Adolfsson, Rune; Persson, Gert A.; and Persson, Hans A. H., 4,370,880, Cl. 72-389.000.
Persson, Hans A. H.: *See—*
Adolfsson, Rune; Persson, Gert A.; and Persson, Hans A. H., 4,370,880, Cl. 72-389.000.
Pert, Candace B.; and Chang, Jaw-Kang, to United States of America, Health and Human Services. Enzyme-resistant opiate pentapeptides. 4,371,463, Cl. 260-112.50E.
Pertec Computer Corporation: *See—*
Brooke, Raymond, 4,371,904, Cl. 360-77.000.
Pessina, Giorgio; and Perobelli, Aldo. Centering conveyor, particularly for bookbindery and the like. 4,371,156, Cl. 270-54.000.
Peterpaul, Joseph, to Thomas & Betts Corporation. Die set having resilient workpiece retention means. 4,370,881, Cl. 72-402.000.
Peters, John W., to Hughes Aircraft Company. Low temperature process for depositing oxide layers by photochemical vapor deposition. 4,371,587, Cl. 428-446.000.
Peters, Klaus-Jurgen: *See—*
Gmelin, Karl; Stiefel, Peter; and Peters, Klaus-Jurgen, 4,370,967, Cl. 123-452.000.
Peters, Walter B., to Manville Service Corporation. Backing plate composition for brake shoes. 4,371,631, Cl. 523-153.000.
Peterson, Donald A., to Stoelting Co. Disposable stylus and reservoir. 4,371,880, Cl. 346-140.00R.
Petri, Heinz: *See—*
Gossler, Gerhard; Petri, Heinz; and Mayer, Hans, 4,371,780, Cl. 219-446.000.
Petro, John: *See—*
Murphy, John J.; Petro, John; and Unglert, Melvin C., 4,371,224, Cl. 316-32.000.
Petrolite Corporation: *See—*
Clarke, Eugene L., 4,371,434, Cl. 204-302.000.
Forchielli, Americo L., 4,371,398, Cl. 106-10.000.
Quinlan, Patrick M., 4,371,497, Cl. 422-12.000.
Petrzelka, Miloslav; and Krude, Werner, to Uni-Cardan AG. Universal joint. 4,371,357, Cl. 464-128.000.
Petzoldt, Karl: *See—*
Hofmeister, Helmut; Petzoldt, Karl; Annen, Klaus; Laurent, Henry; Wiechert, Rudolf; and Steinbeck, Hermann, 4,371,529, Cl. 424-243.000.
Pfaff, Wayne K., to Plastronics Interconnections, Inc. Circuit package handling apparatus. 4,370,805, Cl. 29-741.000.
Pfizer Inc.: *See—*
Johnson, Michael R.; and Melvin, Lawrence S., Jr., 4,371,720, Cl. 568-731.000.
Lombardino, Joseph G.; and Harbert, Charles A., 4,371,696, Cl. 546-283.000.
Phillips Petroleum Company: *See—*
Anderson, Kenneth L., 4,371,671, Cl. 528-388.000.
Bard, William B.; and Walters, John O., 4,371,499, Cl. 422-111.000.
Cheng, Paul J., 4,371,511, Cl. 423-456.000.
Clay, Roger D., 4,371,136, Cl. 248-49.000.
DiBiano, Robert J.; and Hobbs, James W., 4,371,426, Cl. 203-2.000.
Eastman, Alan D.; and Gardner, Lloyd E., 4,371,458, Cl. 252-439.000.
Eastman, Alan D., 4,371,730, Cl. 585-627.000.
Edmonds, James T., Jr.; and Scoggins, Lacey E., 4,371,706, Cl. 562-553.000.
Farha, Floyd E., Jr.; and Gardner, Lloyd E., 4,371,507, Cl. 423-230.000.
Farha, Floyd E., Jr.; and Gardner, Lloyd E., 4,371,728, Cl. 585-258.000.
Holler, Raymond E.; and Henson, Loyal E., 4,371,427, Cl. 203-3.000.
Hutson, Thomas, Jr., 4,371,718, Cl. 568-697.000.
Pollock, Lyle W., 4,371,481, Cl. 264-15.000.
Senatore, Guy, 4,371,635, Cl. 523-219.000.
Stewart, William S.; Funk, Gary L.; and Smith, Dexter E., 4,371,944, Cl. 364-502.000.
Van Pool, Joe, 4,371,732, Cl. 585-723.000.
Washer, Stone P., 4,371,731, Cl. 585-716.000.
Phipps, Arthur L.; and Stoyanov, Ben, to U.C. Industries. Method and apparatus for extruding foamed bodies involving the use of adjustable traction shaping rolls. 4,371,488, Cl. 264-51.000.

Phoenix Chemical Corporation: *See—*
Leistner, William E.; Minagawa, Motonobu; Tsuruga, Kouji; and Harada, Masashi, 4,371,651, Cl. 524-178.000.
Pi, Shing-Chou: *See—*
Bresenham, Jack E.; Grice, Donald G.; and Pi, Shing-Chou, 4,371,933, Cl. 364-300.000.
Pickering, William; and Urbanc, David J., to Caterpillar Tractor Co. Dual element-single oscillator-ratio type digital transducer. 4,370,891, Cl. 73-861.030.
Piepenbrink, Ulrich: *See—*
Stein, Hermann; and Piepenbrink, Ulrich, 4,371,024, Cl. 152-158.000.
Piiroinen, Paavo, to Oy Wartsila AB. Slipping cylinder lock. 4,370,875, Cl. 70-422.000.
Pintureau, Bernard C. J.: *See—*
Voegele, Jean D.; Jourdheuil, Pierre E. J.; Pizzol nee Dalmasso, Jeannine M.; and Pintureau, Bernard C. J., 4,370,946, Cl. 119-1.000.
Pipe Line Development Co., The: *See—*
Smith, William B., 4,370,995, Cl. 137-15.000.
Pischinger, Franz; and Havenith, Cornelis, to Pischinger, Franz. Method of operating an air-compressing, self-igniting engine for liquid fuel. 4,370,958, Cl. 123-276.000.
Pitchon, Esra; Schara, Robert E.; Citarella, William P.; Giacone, Joseph; and Zobel, Frederick A., to General Foods Corporation. Soy-containing dog food. 4,371,556, Cl. 426-311.000.
Pitha, Josef, to United States of America, Health and Human Services. Water soluble forms of retinoids. 4,371,673, Cl. 525-426.000.
Pitney Bowes Inc.: *See—*
Weimer, Charles M., 4,371,781, Cl. 235-101.000.
Pitowski, Hans J.: *See—*
Mathes, Nikolaus; Pitowski, Hans J.; and Vitzthum, Gunther, 4,371,441, Cl. 210-649.000.
Pittman, Benny R. Inflatable umbrella and method of fabricating the same. 4,370,994, Cl. 135-20.00B.
Pitzalis, Octavius, Jr., to Hughes Aircraft Company. Modular microwave power divider-amplifier-combiner. 4,371,845, Cl. 330-277.000.
Piukovich, Sandor: *See—*
Jarai, Miklos; Piukovich, Sandor; Istvan, Sandor; Gado, Istvan; Szell, Valeria; and Barta, Istvan, 4,371,622, Cl. 435-253.000.
Pizzol nee Dalmasso, Jeannine M.: *See—*
Voegele, Jean D.; Jourdheuil, Pierre E. J.; Pizzol nee Dalmasso, Jeannine M.; and Pintureau, Bernard C. J., 4,370,946, Cl. 119-1.000.
Plage, Dieter: *See—*
Weisbach, Gunter; Lucius, Gunter; and Plage, Dieter, 4,370,928, Cl. 101-242.000.
Plastronics Interconnections, Inc.: *See—*
Pfaff, Wayne K., 4,370,805, Cl. 29-741.000.
Platter, Sanford; and Shelley, Pierre, to Applied Magnetics Corporation. Method of making a thin film magnetic head assembly with multiconductive connecting elements. 4,370,802, Cl. 29-603.000.
Plattner, Jacob J.; Pernet, Andre G.; and Fung, Anthony K., to Abbott Laboratories. Benzophenone derivatives. 4,371,546, Cl. 424-330.000.
Pletcher, Erwin C. Orthodontic bracket. 4,371,337, Cl. 433-10.000.
Podell, Allen F.: *See—*
Sontheimer, Carl G.; and Podell, Allen F., 4,371,118, Cl. 241-30.000.
Podmaniczky, Andras; Tokes, Szabolcs; and Lenk, Attila M., to Magyar Tudomanyos Akademia Szamitastechnikai es Automatizalasi Kutato Intezete. Circuit arrangement for controlling a multi-beam acousto-optical cell in which Bragg diffraction is used for the generation of a plurality of outgoing laser beams. 4,371,964, Cl. 372-38.000.
Poehler, Theodore O., Jr.: *See—*
Potember, Richard S.; Poehler, Theodore O., Jr.; and Cowan, Dwaine O., 4,371,883, Cl. 357-8.000.
Polaroid Corporation: *See—*
Bartels-Keith, James R.; and Karger, Eva R., 4,371,603, Cl. 430-218.000.
Czumak, Frank M.; and Fichter, Peter K., 4,371,249, Cl. 354-304.000.
Erlichman, Irving, 4,371,075, Cl. 198-345.000.
Sulesky, Donald J., 4,371,248, Cl. 354-304.000.
Pollock, Lyle W., to Phillips Petroleum Company. Iron-containing refractory balls for retorting oil shale. 4,371,481, Cl. 264-15.000.
Pomfret, Colin T., to List, Hans. Liquid cooled multi-cylinder internal combustion engine. 4,370,951, Cl. 123-41.740.
Pommer, Ernst-Heinrich: *See—*
Acker, Rolf-Dieter; Koenig, Karl-Heinz; Hamprecht, Gerhard; and Pommer, Ernst-Heinrich, 4,371,525, Cl. 424-184.000.
Popper Engineering Co., Ltd.: *See—*
Popper, Jakhin B., 4,370,888, Cl. 73-580.000.
Popper, Jakhin B., to Popper Engineering Co., Ltd. Vibratory weighing apparatus. 4,370,888, Cl. 73-580.000.
Porta Systems Corp.: *See—*
Fasano, Michael C., 4,371,756, Cl. 179-35.000.
Porter, Thomas M. Wire gate latch. 4,371,200, Cl. 292-99.000.
Posorske, Laurence H., to Novo Industri A/S. Prune juice production using cellulase. 4,371,552, Cl. 426-50.000.
Possati, Mario, to Finike Italiana Marposs S.p.A. Gauging head for checking linear dimensions of mechanical pieces. 4,370,812, Cl. 33-169.00R.
Post, Martin F. M.: *See—*
Nanne, Johannes M.; and Post, Martin F. M., 4,371,628, Cl. 518-713.000.
Potember, Richard S.; Poehler, Theodore O., Jr.; and Cowan, Dwaine O., to Johns Hopkins University, The. Current controlled bistable electrical organic thin film switching device. 4,371,883, Cl. 357-8.000.
Poth, Ulrich: *See—*
Moller, Dieter; and Poth, Ulrich, 4,371,667, Cl. 525-208.000.
Potocnik, Joze, to Kolektor p.c. Method for manufacturing unfinished parts for pressed material commutators. 4,370,799, Cl. 29-597.000.
Potts, Herbert M.: *See—*
Tanner, Donald M.; and Potts, Herbert M., 4,371,109, Cl. 229-28.00R.
Powers, Earl W.: *See—*
Wilcox, Raymond J.; and Powers, Earl W., 4,371,293, Cl. 405-259.000.
Pozna, Laszlo, to Tetra Pak International AB. Arrangement for the sealing of thermoplastic-coated packing material. 4,371,768, Cl. 219-10.530.
PPG Industries, Inc.: *See—*
Fahey, Dennis M., 4,371,584, Cl. 428-392.000.
Farabaugh, Aloysius W., 4,371,482, Cl. 264-40.100.
Preston, Edward G.: *See—*
DeAlto, Michael E.; DiGiacomo, Joseph D.; Marritt, Clifford R.; and Preston, Edward G., 4,370,908, Cl. 83-348.000.
Dowding, John G.; and Preston, Edward G., 4,370,942, Cl. 118-40.000.
Principe, William L.; and Fowler, Jacky L. Air table. 4,371,309, Cl. 414-676.000.
Pringle, William L. Fluid cylinder assembly. 4,370,918, Cl. 92-163.000.
Printing Developments, Inc.: *See—*
Ballarini, John A.; and Hetland, Timothy A., 4,371,430, Cl. 204-32.00R.
Pro-Line, Inc.: *See—*
Zide, Robert, 4,370,759, Cl. 2-424.000.
Procter & Gamble Company, The: *See—*
Jones, Keith A.; and Walker, Harry S., Jr., 4,371,461, Cl. 252-547.000.
Products Research & Chemical Corporation: *See—*
Hutter, Charles G., III, 4,371,094, Cl. 222-1.000.
Progress-Elektrogerate Mauz & Pfeiffer GmbH & Co.: *See—*
Kullik, Gunter R. J., 4,370,776, Cl. 15-319.000.
Prohaska, Hans: *See—*
Bienert, Herbert; Hanselmann, Dieter; Kohler, Alfred; and Prohaska, Hans, 4,370,774, Cl. 15-250.200.
Projectus Industriprodukter AB: *See—*
Gustafsson, Berth U., 4,370,772, Cl. 15-97.00R.
Prussen, John; and Gossen, Paul. Structural joint. 4,371,279, Cl. 403-8.000.
Pulcrano, Frank C.: *See—*
Fritzsche, Eldred N.; Josephson, Edgar F.; and Pulcrano, Frank C., 4,371,303, Cl. 414-281.000.
Q Corporation: *See—*
Smith, E. Quimby, Jr., 4,371,788, Cl. 290-42.000.
Queveau, Gerard; and Cheron, Christian. Articulation for vehicle, especially an articulated bus. 4,371,186, Cl. 280-432.000.
Quinlan, Patrick M., to Petrolite Corporation. Inhibition of corrosion with thiazine quaternary ammonium salts of polyepihalophydrin. 4,371,497, Cl. 422-12.000.
Quiring, Bernd; Niederdellmann, Georg; Goyert, Wilhelm; and Wagner, Hans, to Bayer Aktiengesellschaft. Thermoplastic polyurethanes for processing in extruders and/or on calenders. 4,371,684, Cl. 528-65.000.
Rabeisen, Andre J. Video communication system allowing graphic additions to the images communicated. 4,371,893, Cl. 358-93.000.
Rabino, Villarosal A. Convertible firearm-airgun. 4,370,822, Cl. 42-1.00R.
Ragaller, Klaus, to BBC Brown, Boveri & Company, Ltd. Electrical switch for large currents. 4,371,765, Cl. 200-147.00R.
Rahtz, Dieter: *See—*
Braestrup, Claus T.; Nielsen, Mogens C.; Christensen, Joergen A.; Engelstoft, Mogens; Schou, Henning; Eder, Ulrich; Neef, Gunter; Huth, Andreas; Rahtz, Dieter; and Schmiechen, Ralph, 4,371,536, Cl. 424-256.000.
Raidel, John E. Heavy vehicle suspension assembly with free floating springs and axle stabilizing torque rod. 4,371,189, Cl. 280-682.000.
Rairden, John R., III: *See—*
Schilke, Peter W.; Muth, Myron C.; Schilling, William F.; and Rairden, John R., III, 4,370,789, Cl. 29-156.80H.
Raisin, Jean-Pierre: *See—*
Doyen, Joel; and Raisin, Jean-Pierre, 4,371,159, Cl. 271-228.000.
Raleigh, Edward: *See—*
Kushner, Gerald J.; and Raleigh, Edward, 4,371,199, Cl. 285-382.200.
Ramey, Carol. Pressure energized portable power source, and apparatus incorporating same. 4,371,593, Cl. 429-97.000.
Ranadive, Deepak K.: *See—*
Anagnostopoulos, Constantine N.; and Ranadive, Deepak K., 4,371,890, Cl. 357-59.000.
Ranken, Paul F.: *See—*
Zaiko, Edward J.; and Ranken, Paul F., 4,371,473, Cl. 260-465.00G.
Rapoport, Morris, to Du Pont de Nemours, E. I., and Company. Hydrocyanation of olefins. 4,371,474, Cl. 260-465.80R.
Ratanangsu, Karl S. Elevating boot. 4,370,817, Cl. 36-81.000.
Rauffer, Walter: *See—*
Dietrich, Karl-Heinz; Gruber, Josef; Rauffer, Walter; and Nassl, Peter, 4,371,242, Cl. 353-101.000.

Rausing, Hans A., to Tetra Pak International AB. Method for the manufacture of a printed, pre-creased packing material web provided with opening indication. 4,371,364, Cl. 493-7.000.
Ravarotto, Robert: *See—*
  Coetsier, Paul; and Ravarotto, Robert, 4,370,883, Cl. 73-117.000.
Raytheon Company: *See—*
  Gilliatt, Charles L., 4,371,770, Cl. 219-10.55D.
RCA Corporation: *See—*
  Holmes, David D., 4,371,266, Cl. 358-167.000.
  Keigler, John E., 4,371,135, Cl. 244-173.000.
  Knight, Mark B., 4,371,793, Cl. 307-260.000.
  McGuffin, William G., 4,371,959, Cl. 369-43.000.
  Rose, Gerald D., 4,371,961, Cl. 369-126.000.
  Shanley, Robert L., II; and Harwood, Leopold A., 4,371,896, Cl. 358-172.000.
  Siryj, Bohdan W., 4,371,246, Cl. 354-299.000.
  Staebler, David L., 4,371,738, Cl. 136-243.000.
  Yost, Thomas D., 4,371,891, Cl. 358-31.000.
Read, Vernon. Apparatus for and method of drilling a hole into the ground. 4,371,046, Cl. 175-57.000.
Realex Corporation: *See—*
  Foster, Donald D.; and Magers, Wallace F., 4,371,099, Cl. 222-321.000.
Recla, Eugene B.: *See—*
  Eibeck, Richard E.; Robinson, Martin A.; Evans, Francis E.; and Recla, Eugene B., 4,371,707, Cl. 568-6.000.
Regimbal, Richard R.: *See—*
  Becker, Floyd W.; and Regimbal, Richard R., 4,371,041, Cl. 173-28.000.
Reidenbach, Robert B., to Budd Company, The. Apparatus and methods to provide shoring during the manufacturing of a reefer container. 4,370,795, Cl. 29-559.000.
Reilly, David M., to Medrad, Inc. Method and apparatus for injecting and for controlling the pressure of fluid being injected into a catheter. 4,370,982, Cl. 604-98.000.
Rems-Werk Christian Foll und Sohne GmbH & Co.: *See—*
  Wagner, Rudolf, 4,370,770, Cl. 10-96.00R.
Renner, Carl A., to Du Pont de Nemours, E. I., and Company. Photopolymerizable compositions containing N-hydroxyamide and N-hydroxyimide sulfonates. 4,371,605, Cl. 430-280.000.
Resnicow, Herbert. Aerial device. 4,370,824, Cl. 46-74.00D.
Resonant Technology Company: *See—*
  Gurries, Raymond A., 4,370,906, Cl. 81-464.000.
Reuters Limited: *See—*
  Adams, John H., 4,371,871, Cl. 340-717.000.
Reynolds, Blake: *See—*
  Brent, Albert; Marion, Charles P.; Richter, George N.; Crouch, William B.; Child, Edward T.; and Reynolds, Blake, 4,371,378, Cl. 48-86.00R.
  Brent, Albert; Marion, Charles P.; Richter, George N.; Crouch, William B.; Child, Edward T.; and Reynolds, Blake, 4,371,379, Cl. 48-197.00R.
Rhone-Poulenc Industries: *See—*
  Bernelin, Daniel; and Meyer, Jacques, 4,371,638, Cl. 523-427.000.
  Chamard, Alex; Dougier, Patrick; and Monteil, Jean-Bruno, 4,371,567, Cl. 427-130.000.
  de Soyres, Bruno; and Nouvel, Jacques, 4,371,471, Cl. 260-438.50R.
  Pautrot, Jean-Marc, 4,371,505, Cl. 423-10.000.
Rhythm Watch Company Limited: *See—*
  Miyasaka, Hiroshi; and Yamada, Shinji, 4,371,268, Cl. 368-82.000.
Rice, John E., Sr.: *See—*
  Melzer, Zecharia; and Rice, John E., Sr., 4,370,940, Cl. 112-286.000.
Richart, Ralph M.: *See—*
  Manning, John J.; Rosin, Robert E.; and Richart, Ralph M., 4,371,790, Cl. 307-118.000.
Richmond, Bonnie D. Garment with a modesty panel. 4,370,757, Cl. 2-400.000.
Richter, Eike, to General Electric Company. Method and apparatus for output regulation of multiple disk permanent magnet machines. 4,371,801, Cl. 310-156.000.
Richter Gedeon Vegyeszeti Gyar RT.: *See—*
  Urogdi, Laszlo; Patthy nee Lukats, Agnes; Kisfaludy, Lajos; Moravcsik, Erno; Tudos nee Feuer, Helga; Otvos, Laszlo; Tegyei, Zsuzsanna; Palosi, Eva; Sarkadi, Adam; and Szporny, Laszlo, 4,371,534, Cl. 424-248.550.
Richter, George N.: *See—*
  Brent, Albert; Marion, Charles P.; Richter, George N.; Crouch, William B.; Child, Edward T.; and Reynolds, Blake, 4,371,378, Cl. 48-86.00R.
  Brent, Albert; Marion, Charles P.; Richter, George N.; Crouch, William B.; Child, Edward T.; and Reynolds, Blake, 4,371,379, Cl. 48-197.00R.
Ricoh Co., Ltd.: *See—*
  Jinnai, Koichiro, 4,371,878, Cl. 346-75.000.
  Satomi, Toyokazu, 4,371,255, Cl. 355-8.000.
Ridgway, Lance D., to Hy-Reel Machinery, Inc. Vehicle mountable cable reel apparatus. 4,371,147, Cl. 254-326.000.
Riedel, Walter: *See—*
  Berstein, Garri; and Riedel, Walter, 4,371,296, Cl. 407-115.000.
Rieter Machine Works, Ltd.: *See—*
  Briner, Emil; and Novak, Peter, 4,370,850, Cl. 57-96.000.
Riley, Terence J.: *See—*
  Hartman, Adrian R.; Riley, Terence J.; and Shackle, Peter W., 4,371,887, Cl. 357-38.000.
Ringham, Stanley A., to Adbar (Patent Co.) Limited. Insert. 4,371,300, Cl. 411-41.000.
Riordan, Edward D.: *See—*
  Szantho, Charles F.; and Riordan, Edward D., 4,371,772, Cl. 219-89.000.
RMR Systems, Inc.: *See—*
  Manning, John J.; Rosin, Robert E.; and Richart, Ralph M., 4,371,790, Cl. 307-118.000.
Roady, Daniel K.: *See—*
  Off, Joseph W. A.; Early, Judson H.; Roady, Daniel K.; and Thayer, Theodore B., 4,371,074, Cl. 198-339.000.
Robert Bosch GmbH: *See—*
  Bube, Carsten; Dull, Ernst H.; Thiele, Gerd; and Zeller, Hans, 4,371,910, Cl. 361-106.000.
  Frank, Dieter, 4,371,797, Cl. 307-577.000.
  Gmelin, Karl; Stiefel, Peter; and Peters, Klaus-Jurgen, 4,370,967, Cl. 123-452.000.
  Hohn, Richard; Jung, Werner; Winter, Gerhard; and Woerner, Siegfried, 4,371,879, Cl. 346-135.100.
  Muller, Alfred; Schwab, Manfred; and Stroh, Walter, 4,370,904, Cl. 74-858.000.
  Sauer, Rudolf;; and Romann, Peter, 4,370,887, Cl. 73-204.000.
  Stroh, Walter; and Schwab, Manfred, 4,370,903, Cl. 74-858.000.
  Wahl, Josef; Schmidt, Peter-Jurgen; Birmelin, Jorg; Grob, Ferdinand; Kohler, Rolf; Zabler, Erich; Heintz, Frieder; Bremer, Wolfgang; Kopernick, Viktor; Hugel, Robert; Weigl, Andreas; and Baumann, Gunther, 4,371,934, Cl. 364-424.000.
Roberts, Herbert B. Device for mounting equipment in vehicles. 4,371,138, Cl. 248-201.000.
Roberts, William J., to Eltra Corporation. Speed switch. 4,371,833, Cl. 324-161.000.
Robinson, Ivan M., to Du Pont de Nemours, E. I., and Company. Sulfur-modified polytetramethylene ether glycols, a method for preparing them, and polyurethanes prepared therefrom. 4,371,687, Cl. 528-79.000.
Robinson, Ivan M.: *See—*
  Baxter, Warren N.; Merckling, Nicholas G., deceased; Masukawa, Noelle K., administratrix; Robinson, Ivan M.; and Stamatoff, Gelu S., 4,371,680, Cl. 526-159.000.
Robinson, Martin A.: *See—*
  Eibeck, Richard E.; Robinson, Martin A.; Evans, Francis E.; and Recla, Eugene B., 4,371,707, Cl. 568-6.000.
Roble, Roy A.: *See—*
  Baxter, Duane W.; Evjen, Joseph L., Jr.; Hoveland, William C.; Roble, Roy A.; Smith, Donald R.; and Wirz, John H., 4,371,902, Cl. 360-75.000.
Rockefeller University, The: *See—*
  Cerami, Anthony; Brownlee, Michael; and Vlassara, Helen, 4,371,374, Cl. 23-230.00B.
Rockwell International Corporation: *See—*
  De, Bimal B.; Gierut, Lawrence G.; Krakau, Herbert B.; Naik, Kirit; and Tan-Atichat, Eddie, 4,371,754, Cl. 179-18.0EE.
  Dugan, John M., 4,371,974, Cl. 375-82.000.
  Dugan, John M., 4,371,975, Cl. 375-120.000.
  Hallford, Ben R., 4,371,982, Cl. 455-327.000.
  King, Dennis D.; Breitwisch, Ronald L.; and Nickum, James D., 4,371,981, Cl. 455-219.000.
  Nicholson, Margie M., 4,371,236, Cl. 350-357.000.
  Schaefer, Marcus J.; and DeTar, George F., Jr., 4,371,924, Cl. 364-200.000.
Rodaway, Keith S., to Everest & Jennings, Inc. T-joint method and product. 4,370,790, Cl. 29-157.00T.
Rodgers, Aubrey, to United States of America, Army. Thin film plane-polarized intensity pickoff. 4,371,784, Cl. 250-231.0GY.
Rogers, Alfred N.: *See—*
  Awerbuch, Leon; and Rogers, Alfred N., 4,370,858, Cl. 60-641.500.
Roggendorff, Stephen; and Walker, Cuthbert J. Methods of manufacturing large tubular columns. 4,371,108, Cl. 228-173.00C.
Rohm GmbH: *See—*
  Kerk, Klaus; Mueller, Dieter; and Oleiko, Bernd, 4,371,575, Cl. 428-81.000.
Rohm and Haas Company: *See—*
  Gleim, Robert D.; and Gray, Richard T., 4,371,393, Cl. 75-108.000.
  Memon, Nazir A., 4,371,585, Cl. 428-412.000.
Rohr, Jakob, to George Fischer Aktiengesellschaft. Wheel rim bolt attachment. 4,371,212, Cl. 301-9.0DN.
Roland, David R.: *See—*
  Frick, Richard H.; Hill, Randolph J.; and Roland, David R., 4,371,417, Cl. 156-495.000.
Rollband, Ernest J. Nutcracker. 4,370,922, Cl. 99-572.000.
Roller, Hanno; and Nauerth, Karl-Heinz, to Fritz Eichenauer GmbH and Co. KG. Continuous flow electric water heater. 4,371,777, Cl. 219-298.000.
Rolls Royce Limited: *See—*
  Woodward, Clifford S., 4,371,132, Cl. 244-53.00B.
Romann, Peter: *See—*
  Sauer, Rudolf;; and Romann, Peter, 4,370,887, Cl. 73-204.000.
Roscamp, Thomas A.; and Gibson, George W., to Applied Magnetics Corporation. Method of making a thin film magnetic head assembly with multiconductive connecting elements. 4,370,801, Cl. 29-603.000.
Rose, David; Moller, Hinrich; and Maak, Norbert, to Henkel Kommanditgesellschaft auf Aktien. Oxidation hair dyes comprising bis-(2,4-diaminophenoxy)-alkanols as coupling components. 4,371,370, Cl. 8-408.000.
Rose, Gerald D., to RCA Corporation. Capacitive information system. 4,371,961, Cl. 369-126.000.

Rose, Leon I., to Caribbean Properties Limited. Process and apparatus for the contact and separation of immiscible fluids. 4,371,382, Cl. 55-92.000.
Rosemount Inc.: *See—*
  Frick, Roger L., 4,370,890, Cl. 73-718.000.
Rosenquist, Niles R.; and Tyrell, John A., to General Electric Company. Flame retardant polycarbonates. 4,371,650, Cl. 524-162.000.
Rosenthal, Jakub: *See—*
  Kadlec, Vlastimil; Grosser, Vojtech; and Rosenthal, Jakub, 4,371,456, Cl. 252-435.000.
Rosin, Robert E.: *See—*
  Manning, John J.; Rosin, Robert E.; and Richart, Ralph M., 4,371,790, Cl. 307-118.000.
Ross, Woodrow M. Irrigation system. 4,371,113, Cl. 239-201.000.
Rossman, Walter A., to Singer Company, The. Fractional clock edge smoother for a real-time simulation of a polygon face object system. 4,371,872, Cl. 340-728.000.
Rost, K. Lennart. Radon removal system. 4,371,383, Cl. 55-169.000.
Rotork Controls Limited: *See—*
  Fry, Jeremy J.; and Smith, Peter R., 4,370,902, Cl. 74-625.000.
Rovnyak, George C., to E. R. Squibb & Sons, Inc. Phosphinylalkanoyl substituted 4,5-dihydropyrazole-5-carboxylic acid derivatives and hypotensive method and composition. 4,371,526, Cl. 424-200.000.
Rovnyak, George C., to E. R. Squibb & Sons, Inc. Bis-amidine indene ketones, compositions containing same and method of use. 4,371,543, Cl. 424-319.000.
Rubin, Michael D., to Ford Aerospace & Communications Corporation. Differentially coherent signal detector. 4,371,839, Cl. 329-104.000.
Rubner, Roland: *See—*
  Ahne, Hellmut; Kuhn, Eberhard; and Rubner, Roland, 4,371,685, Cl. 528-73.000.
Rudel, Gerhard: *See—*
  von Schneidemesser, Christian; Nowotka, Paul G.; and Rudel, Gerhard, 4,370,835, Cl. 51-165.770.
Rueckerl, Alfred: *See—*
  Bork, Klaus; and Rueckerl, Alfred, 4,371,881, Cl. 346-140.00R.
Ruggeri, John R. Rotary valve for an internal combustion engine. 4,370,955, Cl. 123-190.0BB.
Runion, Cleaston L., to Brown Stove Works, Inc. Ignition circuit deenergizing spring for gas appliance valve-switch. 4,371,764, Cl. 200-61.860.
Rupp, Richard H.: *See—*
  Beck, Gerhard; Knolle, Jochen; Rupp, Richard H.; and Scholkens, Bernward, 4,371,542, Cl. 424-274.000.
Ruprecht, David R.: *See—*
  Lovette, Norris G., Jr.; and Ruprecht, David R., 4,370,861, Cl. 62-63.000.
Ruscelli, Emilio: *See—*
  Borca, Bruno; and Ruscelli, Emilio, 4,371,288, Cl. 405-53.000.
Rusnak, Jan: *See—*
  Turza, Jozef; Kilik, Ondrej; and Rusnak, Jan, 4,371,217, Cl. 308-5.00R.
Russell, Raymond J., to Panelgraphic Corporation. Abrasion resistant coating composition. 4,371,566, Cl. 427-53.100.
Russell, Robert J., to Dow Chemical Company, The. Physically-ameliorated styrene polymer/thermoplastic elastomer polyblends. 4,371,663, Cl. 525-95.000.
Russell, William F.: *See—*
  Monigold, Ray A.; and Russell, William F., 4,371,181, Cl. 280-5.00A.
Ruthrof, Klaus; and Meier, Rainer, to Kraftwerk Union Aktiengesellschaft. Test device for the detection and analysis of material faults. 4,370,889, Cl. 73-619.000.
Ruti Machinery Works Ltd.: *See—*
  Freisler, Erhard, 4,371,008, Cl. 139-348.000.
Ryan, Charles P.: *See—*
  Wilhite, John E.; Shelly, William A.; and Ryan, Charles P., 4,371,927, Cl. 364-200.000.
Sacchi, Giulio. Semi-rotary hydraulic pump. 4,371,320, Cl. 417-461.000.
Sachdev, Harbans S.: *See—*
  Baise, Arnold I.; Burns, John M.; and Sachdev, Harbans S., 4,371,565, Cl. 427-41.000.
Sachs, Bertram: *See—*
  Diepers, Heinrich; and Sachs, Bertram, 4,371,805, Cl. 310-334.000.
Sacilor-Acieries et Laminoirs de Lorraine: *See—*
  Michaux, Jacques M., 4,370,877, Cl. 72-222.000.
Sadana, Devendra K.: *See—*
  Strathman, Michael D.; Sadana, Devendra K.; and True, Richard B., 4,371,774, Cl. 219-121.0EA.
Sagami Chemical Research Center: *See—*
  Umemoto, Teruo, 4,371,710, Cl. 568-35.000.
Sage, David M.; and Sage, George E. Variable reactance alignment detector and control. 4,371,116, Cl. 239-720.000.
Sage, George E.: *See—*
  Sage, David M.; and Sage, George E., 4,371,116, Cl. 239-720.000.
Saibu Gas Co. Ltd.: *See—*
  Muta, Natsuo; and Kanamaru, Toshihisa, 4,371,569, Cl. 427-230.000.
Saint-Gobain Vitrage: *See—*
  Dages, Daniel, 4,371,586, Cl. 428-437.000.
  Siemens, Walter; Ulrich, Gunther; and Bartusel, Karl R., 4,371,103, Cl. 225-1.000.
Saito, Kenji; and Yamachika, Hiroshi, to Sumitomo Chemical Company, Limited. Process for producing 4-hydroxycyclopentenones. 4,371,711, Cl. 568-310.000.
Saito, Seitoku: *See—*
  Izumi, Toshiaki; Saito, Seitoku; Maruta, Fumio; and Kameya, Minoru, 4,371,590, Cl. 428-555.000.
Sakamoto, Masakatsu, to Hitachi, Ltd. Slurry conveyor system. 4,371,294, Cl. 406-109.000.
Sakashita, Masao, to Kabushiki Kaisha Kawai Gakki Seisakusho. Shielded wire. 4,371,745, Cl. 174-115.000.
Saloff, William S. Damped fluid displacement support system. 4,370,768, Cl. 5-450.000.
Salowe, Seymour; and Zinchuk, Thomas C., to Westinghouse Electric Corp. Capacitor unit with a discharge resistor switch. 4,371,829, Cl. 323-209.000.
Salters, Roelof H. W.: *See—*
  Mulder, Cornelis; Nederlof, Leendert; Niessen, Cornelis; Wijnhoven, Rene M. G.; and Salters, Roelof H. W., 4,371,795, Cl. 307-440.000.
Salzmann, Theodor, to Siemens Aktiengesellschaft. Polyphase frequency converter with individually current-regulated outputs. 4,371,920, Cl. 363-160.000.
Sambucetti, Carlos J.: *See—*
  Kendall, Arthur H.; Mitchell, Joseph W.; and Sambucetti, Carlos J., 4,371,273, Cl. 400-119.000.
Sanchez, Moises G.; and Laine, Norman R., to W. R. Grace & Co. Alumina compositions. 4,371,513, Cl. 423-625.000.
Sanders Associates, Inc.: *See—*
  Chicklis, Evan P.; and Mosto, James R., 4,371,969, Cl. 372-77.000.
Sanderson, Brian A., to Smith & Nephew Associated Companies, Ltd. Protective devices and methods. 4,370,981, Cl. 128-334.00R.
Sandoz Ltd.: *See—*
  Weible, Karl-Heinz, 4,371,372, Cl. 8-543.000.
Sandoz, Oscar A.; and Mar, John, to Canada, Her Majesty the Queen in right of, as represented by the Minister of National Defence. Antisubmarine warfare system. 4,371,957, Cl. 367-3.000.
Sankey, Edwin W.; and Whittingham, David J., to Dresser Industries, Inc. Support structures of excavating machines. 4,371,086, Cl. 212-253.000.
Sankyo Company Ltd.: *See—*
  Soma, Nobuo; Motomura, Syoji; Yoshioka, Takao; and Kurumada, Tomoyuki, 4,371,644, Cl. 524-102.000.
Sano, Akira: *See—*
  Kuroda, Nobuyuki; Sano, Akira; Nakamura, Toru; Matsuura, Kazuo; and Miyoshi, Mituji, 4,371,679, Cl. 526-116.000.
Sanshin Kogyo Kabushiki Kaisha: *See—*
  Kimpara, Akiyoshi, 4,370,998, Cl. 137-264.000.
Sanyo Electric Co., Ltd.: *See—*
  Ikeda, Hironosuke; Narukawa, Satoshi; and Nakaido, Shigehiro, 4,371,597, Cl. 429-153.000.
Sardisco, John B.; and Drechsel, Erhart K., to Pennzoil Company. Production of alkali metal sulfates. 4,371,512, Cl. 423-551.000.
Sargent Industries, Inc.: *See—*
  Smith, Fred T., 4,371,304, Cl. 414-293.000.
  Smith, Fred T., 4,371,306, Cl. 414-325.000.
Sarkadi, Adam: *See—*
  Urogdi, Laszlo; Patthy nee Lukats, Agnes; Kisfaludy, Lajos; Moravcsik, Erno; Tudos nee Feuer, Helga; Otvos, Laszlo; Tegyei, Zsuzsanna; Palosi, Eva; Sarkadi, Adam; and Szporny, Laszlo, 4,371,534, Cl. 424-248.550.
Saruta, Masahiro; and Uchiyama, Hiroki, to NTN Toyo Bearing Co., Ltd. Fuel feed system. 4,370,966, Cl. 123-447.000.
Sasabe, Toshiki: *See—*
  Honma, Hideo; Ikari, Kunihiro; Sasaki, Osamu; Sasabe, Toshiki; Takeda, Kasuhiro; and Takamura, Tsutomu, 4,371,397, Cl. 106-1.230.
Sasaki, Nobuo, to Fujitsu Limited. Charge-pumping MOS FET memory device. 4,371,955, Cl. 365-185.000.
Sasaki, Osamu: *See—*
  Honma, Hideo; Ikari, Kunihiro; Sasaki, Osamu; Sasabe, Toshiki; Takeda, Kasuhiro; and Takamura, Tsutomu, 4,371,397, Cl. 106-1.230.
Satake Engineering Co., Ltd.: *See—*
  Satake, Toshihiko, 4,371,081, Cl. 209-580.000.
Satake, Toshihiko, to Satake Engineering Co., Ltd. Photoelectric sorting device for color sorting apparatus. 4,371,081, Cl. 209-580.000.
Sato, Minoru; Hirose, Yoshiteru; and Toyoshima, Shigeshi, to Mitsubishi Burlington Co., Ltd.; Ajinomoto Co., Ltd.; and Mitsui & Co., Ltd. Antimicrobial carpet containing amino acid type surfactant. 4,371,577, Cl. 428-96.000.
Sato, Shiro: *See—*
  Nagata, Koji; Nishikawa, Mamoru; and Sato, Shiro, 4,370,944, Cl. 118-302.000.
Satoh, Masatoshi: *See—*
  Takahashi, Hiroshi; and Satoh, Masatoshi, 4,370,809, Cl. 30-381.000.
Satomi, Toyokazu, to Ricoh Company, Ltd. Electrophotographic copying method and apparatus of reciprocal original scanning type. 4,371,255, Cl. 355-8.000.
Sauer, Rudolf;; and Romann, Peter, to Robert Bosch GmbH. Device for measuring the mass of a flowing medium. 4,370,887, Cl. 73-204.000.
Saujet, Claude, to Cartier International B.V. Package for perfume products. 4,371,087, Cl. 215-12.00R.
Sawyer, John: *See—*
  Bolen, Ralph A., 4,370,901, Cl. 74-586.000.
Sax Zzyzx, Ltd.: *See—*
  Anthony, Myron L., 4,371,424, Cl. 202-159.000.

Saxholm, Rolf. Apparatus and testing reactions. 4,371,624, Cl. 435-291.000.
Schaaf, Wayne J.; and Boswell, Bennie J., to Chromalloy American Corporation. Tool bar control for agricultural implement. 4,371,039, Cl. 172-244.000.
Schaefer, Hans; and Budich, Wolfgang, to Dynamit Nobel Aktiengesellschaft. Sliding window. 4,370,830, Cl. 49-413.000.
Schaefer, Marcus J.; and DeTar, George F., Jr., to Rockwell International Corp. Computer system apparatus for prefetching data requested by a peripheral device from memory. 4,371,924, Cl. 364-200.000.
Schank, Richard L.; and Marsh, Dana G., to Xerox Corporation. Release overcoat for photoresponsive device. 4,371,600, Cl. 430-56.000.
Schara, Robert E.: *See—*
  Pitchon, Esra; Schara, Robert E.; Citarella, William P.; Giacone, Joseph; and Zobel, Frederick A., 4,371,556, Cl. 426-311.000.
Scharf, Emil: *See—*
  Hertel, Otto; Scharf, Emil; Melzer, Jaroslav; and Fikentscher, Rolf, 4,371,674, Cl. 525-435.000.
Schebler, Andreas: *See—*
  Meixner, Hans; and Schebler, Andreas, 4,371,778, Cl. 219-302.000.
Schedlitzki, Dietmar: *See—*
  Fock, Jurgen; Schedlitzki, Dietmar; Holtschmidt, Ulrich; and Ahrens, Wilhelm, 4,371,683, Cl. 528-60.000.
Scheef, Hans-Volker: *See—*
  Herwig, Jens; Schleppinghoff, Bernhard; and Scheef, Hans-Volker, 4,371,725, Cl. 568-907.000.
Scheffel, Walter. Picking method and apparatus on textile looms involving the use of a fluid medium. 4,371,007, Cl. 139-435.000.
Scherer, Hans; Lotsch, Wolfgang; and Bock, Gustav, to BASF Aktiengesellschaft. Preparation of pigments having improved technological properties. 4,371,735, Cl. 544-300.000.
Schering, Aktiengesellschaft: *See—*
  Hofmeister, Helmut; Petzoldt, Karl; Annen, Klaus; Laurent, Henry; Wiechert, Rudolf; and Steinbeck, Hermann, 4,371,529, Cl. 424-243.000.
Scherling AG: *See—*
  Braestrup, Claus T.; Nielsen, Mogens C.; Christensen, Joergen A.; Engelstoft, Mogens; Schou, Henning; Eder, Ulrich; Neef, Gunter; Huth, Andreas; Rahtz, Dieter; and Schmiechen, Ralph, 4,371,536, Cl. 424-256.000.
Scheunemann, Kurt: *See—*
  Lindner, Friedrich; and Scheunemann, Kurt, 4,371,029, Cl. 165-10.000.
Schiepers, Lambertus A. C.: *See—*
  Boesten, Wilhelmus H. J.; and Schiepers, Lambertus A. C., 4,371,464, Cl. 260-112.50R.
Schierjott, Rudolf, to Siemens Aktiengesellschaft. High efficiency push-pull saturation converter. 4,371,918, Cl. 363-22.000.
Schiessl, Alois: *See—*
  Steinicke, Wolfgang; Badura, Wolfgang; Schiessl, Alois; Weinzierl, Werner; and Krone, Hartmut, 4,370,929, Cl. 102-202.000.
Schilke, Peter W.; Muth, Myron C.; Schilling, William F.; and Rairden, John R., III. Fabrication of gas turbine water-cooled composite nozzle and bucket hardware employing plasma spray process. 4,370,789, Cl. 29-156.80H.
Schilling, Walter W.: *See—*
  Barnes, Derek; Churchland, Mark T.; Herndier, Arnold W.; Schilling, Walter W.; and Welsh, James K., 4,371,020, Cl. 144-366.000.
Schilling, William F.: *See—*
  Schilke, Peter W.; Muth, Myron C.; Schilling, William F.; and Rairden, John R., III, 4,370,789, Cl. 29-156.80H.
Schindel, Arnold; and Caspar, John A., to Singer Company, The. Commutator brush holder quadrature spring. 4,371,803, Cl. 310-242.000.
Schippers, Heinz: *See—*
  Bauer, Karl; Schippers, Heinz; and Dammann, Peter, 4,370,853, Cl. 57-340.000.
Schleppinghoff, Bernhard: *See—*
  Herwig, Jens; Schleppinghoff, Bernhard; and Scheef, Hans-Volker, 4,371,725, Cl. 568-907.000.
Schluter, Wilhelm: *See—*
  Beckschulte, Heinrich; and Schluter, Wilhelm, 4,370,945, Cl. 118-303.000.
Schmidt, Kurt: *See—*
  Marx, Karl; Winkler, Klaus; Schmidt, Kurt; and Jentzsch, Joachim, 4,371,158, Cl. 271-103.000.
Schmidt, Peter-Jurgen: *See—*
  Wahl, Josef; Schmidt, Peter-Jurgen; Birmelin, Jorg; Grob, Ferdinand; Kohler, Rolf; Zabler, Erich; Heintz, Frieder; Bremer, Wolfgang; Kopernick, Viktor; Hugel, Robert; Weigl, Andreas; and Baumann, Gunther, 4,371,934, Cl. 364-424.000.
Schmidt, Sylvia, to Kleinewefers GmbH. Apparatus for leveling the surface of a strip of paper. 4,370,923, Cl. 100-47.000.
Schmiechen, Ralph: *See—*
  Braestrup, Claus T.; Nielsen, Mogens C.; Christensen, Joergen A.; Engelstoft, Mogens; Schou, Henning; Eder, Ulrich; Neef, Gunter; Huth, Andreas; Rahtz, Dieter; and Schmiechen, Ralph, 4,371,536, Cl. 424-256.000.
Schmitt, Frederick L.: *See—*
  Kiwala, Jacob; Tokarzewski, Richard J.; Schmitt, Frederick L.; and Sprecker, Mark A., 4,371,715, Cl. 568-659.000.
Schmitz, Andreas: *See—*
  Fischer, Berthold; Kabelitz, Hans-Peter; and Schmitz, Andreas, 4,371,323, Cl. 418-55.000.
Schmoock, Roy F., to Fischer & Porter Co. Electromagnetic flowmeter having noise suppression network. 4,370,892, Cl. 73-861.120.
Schneider, Thomas E.: *See—*
  Funcik, Jack F.; Bennet, Joseph C.; Tubbs, Joseph T.; and Schneider, Thomas E., 4,370,806, Cl. 29-749.000.
Schnettler, Richard A.: *See—*
  Grisar, J. Martin; Schnettler, Richard A.; and Dage, Richard C., 4,371,737, Cl. 544-370.000.
Scholefield, Clifford L.: *See—*
  Mullersman, Ferdinand H.; and Scholefield, Clifford L., 4,371,827, Cl. 320-48.000.
Scholes, Addison B., to Ball Corporation. Method and apparatus for handling glassware. 4,371,387, Cl. 65-118.000.
Scholkens, Bernward: *See—*
  Beck, Gerhard; Knolle, Jochen; Rupp, Richard H.; and Scholkens, Bernward, 4,371,542, Cl. 424-274.000.
Scholl, Charles H.; and Frates, Paul S., to Nordson Corporation. Control apparatus for pressurized gas/liquid systems. 4,371,096, Cl. 222-190.000.
Schoolar, Richard B.: *See—*
  Jensen, James D.; and Schoolar, Richard B., 4,371,232, Cl. 350-1.400.
Schorr, Wolfgang: *See—*
  Nickel, Bernd; and Schorr, Wolfgang, 4,371,836, Cl. 324-207.000.
Schou, Henning: *See—*
  Braestrup, Claus T.; Nielsen, Mogens C.; Christensen, Joergen A.; Engelstoft, Mogens; Schou, Henning; Eder, Ulrich; Neef, Gunter; Huth, Andreas; Rahtz, Dieter; and Schmiechen, Ralph, 4,371,536, Cl. 424-256.000.
Schreiber, Erich: *See—*
  Woss, Gerhard; and Schreiber, Erich, 4,370,884, Cl. 73-117.300.
Schroeder, Donald R.: *See—*
  Hunt, Roger W.; Miller, Brian T.; and Schroeder, Donald R., 4,371,078, Cl. 206-329.000.
Schuck, David B., to NCR Corporation. Diagnostic circuitry for isolating a faulty subsystem in a data processing system. 4,371,952, Cl. 364-900.000.
Schuck, Stephan: *See—*
  Koblo, Jochen; and Schuck, Stephan, 4,371,321, Cl. 418-45.000.
Schuftan, Alice, executrix: *See—*
  Schuftan, Paul M., deceased, 4,371,381, Cl. 55-27.000.
Schuftan, Paul M., deceased (by Schuftan, Alice, executrix), to Cryoplants Limited. Gas purification process. 4,371,381, Cl. 55-27.000.
Schuller, Marius C., to Fiberglas Canada, Inc. Method and apparatus for winding strand material and package. 4,371,122, Cl. 242-43.00R.
Schulte-Elte, Karl H.: *See—*
  Naf, Ferdinand; Decorzant, Rene; and Schulte-Elte, Karl H., 4,371,460, Cl. 252-522.00R.
Schulz, David A., to Union Carbide Corporation. Bobbin for use in producing a mesophase pitch derived carbon yarn. 4,371,129, Cl. 242-118.700.
Schurr, Volker; Nickel, Hans; Hoppner, Klaus; Kohler, Gisbert; Weiss, Hermann; and Wieland, Dieter, to Stihl, Andreas. Portable motor chain saw. 4,370,810, Cl. 30-382.000.
Schutte, Dieter: *See—*
  Aichelmann, Dietmar; Kannenberg, Karl; Schutte, Dieter; and Volling, Axel, 4,371,503, Cl. 422-307.000.
Schwab, Manfred: *See—*
  Muller, Alfred; Schwab, Manfred; and Stroh, Walter, 4,370,904, Cl. 74-858.000.
  Stroh, Walter; and Schwab, Manfred, 4,370,903, Cl. 74-858.000.
Schwartz, Robert D.; and Keller, Frederick A., Jr., to Union Carbide Corporation. Acetic acid by fermentation. 4,371,619, Cl. 435-140.000.
Schwarz, Dieter; Misner, Ralf; and Glasbergen, Johannes W., to U.S. Philips Corporation. Adaptive delta modulator. 4,371,972, Cl. 375-30.000.
Schwarz, Hans-Helmut: *See—*
  Friedhofen, Gerhard; Serini, Volker; Neumann, Rainer; Freitag, Dieter; and Schwarz, Hans-Helmut, 4,371,691, Cl. 528-196.000.
Schwarz, Rudolf, to Staeubli Ltd. Reading and control device for a control machine. 4,371,006, Cl. 139-68.000.
Schwerdt, Paul: *See—*
  Grossner, Horst; Kaminski, Detlef; and Schwerdt, Paul, 4,370,965, Cl. 123-426.000.
Scifres, Donald R.; Streifer, William; and Burnham, Robert D., to Xerox Corporation. Heterostructure lasers with combination active strip and passive waveguide strip. 4,371,966, Cl. 372-45.000.
SCM Corporation: *See—*
  Kane, Bernard J.; and Von Genk, Richard A., 4,371,722, Cl. 568-828.000.
Scoggins, Lacey E.: *See—*
  Edmonds, James T., Jr.; and Scoggins, Lacey E., 4,371,706, Cl. 562-553.000.
Scordato, Richard E.; and Varca, Robert J., to Medical Laboratory Automation, Inc. Coded cuvette for use in testing apparatus. 4,371,498, Cl. 422-102.000.
Scott, M. Walter: *See—*
  Abdelrahman, Mona; Fuchs, Ralph W.; Holman, James O.; Johnson, Robert G.; and Scott, M. Walter, 4,371,861, Cl. 338-25.000.
Scotti, Frank; and Page, Edward H. Lecithin containing surface release compositions. 4,371,451, Cl. 252-305.000.
Sea-Land Industries, Inc.: *See—*
  Van Iperen, Willem H. P., 4,371,298, Cl. 410-25.000.
SEB S.A.: *See—*
  Sebillotte, Christian, 4,370,999, Cl. 137-270.000.

Sebag, Henri: *See—*
  Vanlerberghe, Guy; Sebag, Henri; Zysman, Alexandre; and Dubief, Claude, 4,371,517, Cl. 424-70.000.
Sebillotte, Christian, to SEB S.A. Pressure limiting device with two pressure levels for a pressure cooker. 4,370,999, Cl. 137-270.000.
Sedlacek, Franz; Oertle, Jakob; and Cebulla, Dietrich, to Escher Wyss Limited. Ring-gap nozzle. 4,371,115, Cl. 239-524.000.
Sedlaczek, Janusz: *See—*
  Karowiec, Krzysztof; Sedlaczek, Janusz; Mura, Alojzy; Pawelczyk, Jerzy; and Skrzypiec, Zbigniew, 4,371,477, Cl. 261-30.000.
Seifert, Peter: *See—*
  Konig, Klaus; Illger, Hans-Walter; Seifert, Peter; and Meyborg, Holger, 4,371,630, Cl. 521-173.000.
Seijo, Hideji: *See—*
  Matsumoto, Kunio; Izumi, Rokuro; Seijo, Hideji; and Mizuguchi, Hiroyuki, 4,371,612, Cl. 435-44.000.
Seiko Koki Kabushiki Kaisha: *See—*
  Ogihara, Masuo; Shinozaki, Nobuo; Ishikawa, Tadashi; and Seki, Yoichi, 4,371,267, Cl. 368-74.000.
Seki, Masayuki, to Nissin Kogyo Kabushiki Kaisha. Automatic adjusting device in a disc brake. 4,371,059, Cl. 188-71.800.
Seki, Yoichi: *See—*
  Ogihara, Masuo; Shinozaki, Nobuo; Ishikawa, Tadashi; and Seki, Yoichi, 4,371,267, Cl. 368-74.000.
Sekine, Kenji: *See—*
  Daitoku, Koichi; Sekine, Kenji; Matsukawa, Nobuo; and Sugimori, Shiro, 4,371,244, Cl. 354-173.000.
Sekiya, Makoto: *See—*
  Kinoshita, Hirotsugu; Uemura, Hiroshi; and Sekiya, Makoto, 4,371,446, Cl. 252-51.50A.
Sekiya, Mutsuo: *See—*
  Uchikawa, Fusaoki; Tanaka, Hideharu; Sekiya, Mutsuo; and Ohata, Yasufumi, 4,371,581, Cl. 428-304.400.
Selby, Thomas P., to Du Pont de Nemours, E. I., and Company. Herbicidal pyridinyloxy(pyrimidinyloxy)benzenes. 4,371,736, Cl. 544-316.000.
Semenov, Evgeny I.: *See—*
  Kopysky, Boris D.; Dmitriev, Viktor D.; Khaustov, Georgy I.; Brodsky, Viktor M.; Surzhikov, Vitaly A.; Semenov, Evgeny I.; Chus, Vladimir G.; Misjulya, Viktor A.; Kandyba, Leonid F.; Ivanov, Igor P.; Bezzub, Grigory I.; Goldenberg, Yasha F.; Zonnenberg, Ilya S.; Paly, Alexandr G.; and Malkin, Arkady S., 4,370,879, Cl. 72-377.000.
Senatore, Guy, to Phillips Petroleum Company. Filled high vinyl polybutadiene thermosetting compositions containing a maleic anhydride-polybutadiene adduct. 4,371,635, Cl. 523-219.000.
Sentrol, Inc.: *See—*
  Holce, Thomas J.; and Huckins, Charles M., 4,371,856, Cl. 335-202.000.
Serini, Volker: *See—*
  Friedhofen, Gerhard; Serini, Volker; Neumann, Rainer; Freitag, Dieter; and Schwarz, Hans-Helmut, 4,371,691, Cl. 528-196.000.
Serri, Roberto. Articulated prosthesis for lower limb. 4,370,761, Cl. 3-26.000.
Seybold, Guenther, to BASF Aktiengesellschaft. Preparation of thiazole derivatives. 4,371,734, Cl. 544-300.000.
Shackle, Peter W.: *See—*
  Hartman, Adrian R.; MacRae, Alfred U.; and Shackle, Peter W., 4,371,886, Cl. 357-38.000.
  Hartman, Adrian R.; Riley, Terence J.; and Shackle, Peter W., 4,371,887, Cl. 357-38.000.
Shaffer, Robert L.; and Heckman, Richard W. Bowler's wrist and finger control device. 4,371,163, Cl. 273-54.00B.
Shah, Prabodh L., to Honeywell Inc. Programmable signal equalizer. 4,371,901, Cl. 360-65.000.
Shanley, Robert L., II; and Harwood, Leopold A., to RCA Corporation. Stabilized video signal control loop. 4,371,896, Cl. 358-172.000.
Sharp, Richard S.: *See—*
  Chu, Ke-Chiang; and Sharp, Richard S., 4,371,949, Cl. 364-900.000.
Shaw, Jerry: *See—*
  Solitt, Samuel G.; and Shaw, Jerry, 4,371,077, Cl. 206-45.140.
Shefford, Roger A., to Koninklijke Emballage Industrie Van Leer B.V. Enclosure member substantially impermeable to the transmission of solvents and fuels. 4,371,574, Cl. 428-35.000.
Sheibley, Dean W., to United States of America, National Aeronautics and Space Administration. Advanced inorganic separators for alkaline batteries and method of making the same. 4,371,596, Cl. 429-144.000.
Shell Oil Company: *See—*
  Muszynski, Larry C., 4,371,639, Cl. 523-512.000.
  Nanne, Johannes M.; and Post, Martin F. M., 4,371,628, Cl. 518-713.000.
  Paxson, Timm E.; Kim, Leo; and Van Aken, Andre B., 4,371,716, Cl. 568-678.000.
Shelley, Pierre: *See—*
  Platter, Sanford; and Shelley, Pierre, 4,370,802, Cl. 29-603.000.
Shelly, Randolph D. W., to Sperry Corporation. Non-dissipative battery charge circuit. 4,371,826, Cl. 320-21.000.
Shelly, William A.: *See—*
  Wilhite, John E.; Shelly, William A.; and Ryan, Charles P., 4,371,927, Cl. 364-200.000.
Shenkman, Mikhail Y.: *See—*
  Ivanov, Valentin A.; Khodosh, Vladimir A.; Shenkman, Mikhail Y.; Kirbatov, Vladimir L.; and Fishman, Iosif D., 4,371,290, Cl. 405-150.000.
Shiba, Haruo: *See—*
  Okamura, Masatoshi; and Shiba, Haruo, 4,371,286, Cl. 403-407.000.
Shibata, Kunio: *See—*
  Suzuki, Hiroshi; Shibata, Kunio; and Sugita, Kazuhiko, 4,371,216, Cl. 384-118.000.
Shikasho, Satoru, to International Telephone and Telegraph Corporation. Pressure booster system with low-flow shut-down control. 4,371,315, Cl. ~~417-5.000.~~
Shimamoto, Susumu: *See—*
  Ando, Toshinari; Nishi, Masataka; Shimamoto, Susumu; Yoshida, Hiromichi; Suzumura, Takashi; Kakizaki, Kimio; Yamagishi, Ryozo; and Ogata, Hisanao, 4,371,741, ~~Cl.~~ 174-15.00S.
Shimano Industrial Company Limited: *See—*
  Shimano, Keizo, 4,371,064, Cl. 192-6.00A.
  Shimano, Keizo, 4,371,176, Cl. 277-56.000.
Shimano, Keizo, to Shimano Industrial Company Limited. Drive and brake device for a bicycle. 4,371,064, Cl. 192-6.00A.
Shimano, Keizo, to Shimano Industrial Company Limited. Sealing construction for rotating portions at a bicycle. 4,371,176, Cl. 277-56.000.
Shimazaki, Masami: *See—*
  Ohashi, Takehisa; Shimazaki, Masami; Kan, Kazunori; Kondo, Hideo; and Watanabe, Kiyoshi, 4,371,699, Cl. 548-201.000.
Shimizu, Hirokazu: *See—*
  Wada, Masaru; Shimizu, Hirokazu; Sugino, Takashi; and Itoh, Kunio, 4,371,967, Cl. 372-45.000.
Shimizu, Ichiro; Komine, Yoshio; and Masunaga, Makoto, to Canon Kabushiki Kaisha. Motion picture camera having an auto-focus adjusting device. 4,371,240, Cl. 352-140.000.
Shimizu, Katsuichi: *See—*
  Yoshimura, Shigeru; and Shimizu, Katsuichi, 4,371,256, Cl. 355-14.0SH.
Shimizu, Kazuo, to Agency of Industrial Science and Technology. Method for the preparation of ethylbenzene. 4,371,729, Cl. 585-453.000.
Shimogawa, Toshiaki; Ando, Takayuki; and Kuwakado, Satosi, to Nippon Soken, Inc. Seat belt locking device. 4,371,127, Cl. 242-107.200.
Shimozato, Yasuyuki: *See—*
  Ikeda, Hiroharu; and Shimozato, Yasuyuki, 4,371,668, Cl. 525-133.000.
Shin Nippon Koki Co., Ltd.: *See—*
  Watanabe, Kazutomi; Iwasaki, Sokichi; and Baba, Nobuyuki, 4,370,943, Cl. 118-218.000.
Shingo, Hiromichi, to Toyo Shokuhinkikai Kabushiki Kaisha. Apparatus for fitting and stacking bags onto pins. 4,371,365, Cl. 493-25.000.
Shinichiro, No: *See—*
  Kazumi, Ozawa; and Shinichiro, No, 4,370,925, Cl. 101-40.000.
Shinoda, Kazuo; Higashigawa, Keizo; and Shiozawa, Ken, to Toyota Jidosha Kogyo Kabushiki Kaisha. Anti surge float chamber assembly. 4,371,000, Cl. 137-434.000.
Shinohara, Masanao; Nakano, Yoshimasa; Kaise, Hirotsugu; Izawa, Taketoshi; and Miyazaki, Wasei, to Otsuka Pharmaceutical Co., Ltd. Anticomplementary agents comprising soyasapogenol B compounds. 4,371,524, Cl. 424-180.000.
Shinozaki, Nobuo: *See—*
  Ogihara, Masuo; Shinozaki, Nobuo; Ishikawa, Tadashi; and Seki, Yoichi, 4,371,267, Cl. 368-74.000.
Shinozaki, Satoshi: *See—*
  Yoshizawa, Rokuro; and Shinozaki, Satoshi, 4,371,423, Cl. 156-653.000.
Shionogi & Co., Ltd.: *See—*
  Narisada, Masayuki; and Okada, Tetsuo, 4,371,532, Cl. 424-248.510.
  Tanaka, Kentaro; Tsuji, Naoki; Kondo, Eiji; and Kawamura, Yoshimi, 4,371,617, Cl. 435-119.000.
Shiozawa, Ken: *See—*
  Shinoda, Kazuo; Higashigawa, Keizo; and Shiozawa, Ken, 4,371,000, Cl. 137-434.000.
Shooltz, Michael L. Exercise device for runners. 4,371,160, Cl. 272-96.000.
Showa Kagaku Kogyo Company, Ltd.: *See—*
  Yanagisawa, Takao; and Tanaka, Meguru, 4,371,475, Cl. 260-512.00R.
Sibley, Clifton B.; and Bell, Robert P., to Ferrofluidics Corporation. Crystal growing furnace pulling head. 4,371,502, Cl. 422-249.000.
Siemens Aktiengesellschaft: *See—*
  Ahne, Hellmut; Kuhn, Eberhard; and Rubner, Roland, 4,371,685, Cl. 528-73.000.
  Bintig, Werner; and Christgau, Hermann, 4,371,806, Cl. 313-101.000.
  Bork, Klaus; and Rueckerl, Alfred, 4,371,881, Cl. 346-140.00R.
  Boschulte, Rainer; Koehnecke, Heinrich; and Muecke, Siegfried, 4,371,831, Cl. 323-284.000.
  Diepers, Heinrich; and Sachs, Bertram, 4,371,805, Cl. 310-334.000.
  Dollheimer, Jurgen; and Knoll, Klaus, 4,371,813, Cl. 315-377.000.
  Jaeger, Klaus, 4,371,274, Cl. 400-121.000.
  Januschkowetz, Herbert; and Laub, Hans, 4,371,573, Cl. 427-438.000.
  Jung, Albert, 4,371,231, Cl. 339-275.00R.
  Meixner, Hans; and Schebler, Andreas, 4,371,778, Cl. 219-302.000.
  Nickel, Bernd; and Schorr, Wolfgang, 4,371,836, Cl. 324-207.000.
  Salzmann, Theodor, 4,371,920, Cl. 363-160.000.
  Schierjott, Rudolf, 4,371,918, Cl. 363-22.000.
  Zeitraeg, Rolf, 4,371,962, Cl. 370-100.000.

Siemens, Walter; Ulrich, Gunther; and Bartusel, Karl R., to Saint-Gobain Vitrage. Process and apparatus for breaking off marginal edge portions from a glass pane. 4,371,103, Cl. 225-1.000.
Sieverin, Walter J., to American Can Company. Temperature compensated input power and output offset circuits for a hall effect transducer. 4,371,837, Cl. 324-225.000.
Sigma-Tau Industrie Farmaceutiche Riunite S.p.A.: *See—*
Cavazza, Claudio, 4,371,618, Cl. 435-128.000.
Signorini, Aldo: *See—*
Canevari, Cesare; and Signorini, Aldo, 4,371,025, Cl. 152-352.00R.
Silent Running Corporation: *See—*
Hannas, James R., 4,371,814, Cl. 318-16.000.
Silverman, Gary S.; Zera, Robert D.; Kubiatowicz, James F.; and Claussen, Robert L., to Custom Concepts Incorporated. Self-contained game. 4,371,171, Cl. 273-357.000.
Simington, Jack F. Chain tooth locator. 4,370,905, Cl. 76-74.000.
Simoglou, Arthur. Protective footwear. 4,370,818, Cl. 36-100.000.
Simonds, Gary: *See—*
Stewart, William R.; and Simonds, Gary, 4,370,972, Cl. 124-23.00R.
Simons, Peter B., to TBS, Inc. Toner loading system having cartridge with displaceable diaphragm. 4,371,015, Cl. 141-352.000.
Simson, Dionizy, to Sulzer Brothers Limited. Weft yarn accumulator. 4,371,009, Cl. 139-452.000.
Singer Company, The: *See—*
Rossman, Walter A., 4,371,872, Cl. 340-728.000.
Schindel, Arnold; and Caspar, John A., 4,371,803, Cl. 310-242.000.
Siregar, John A.; and Arkoudilos, John, to Liggett Group Inc. Semi-moist dog food preparation. 4,371,558, Cl. 426-332.000.
Siryj, Bohdan W., to RCA Corporation. Thermal processor. 4,371,246, Cl. 354-299.000.
Skalleberg, Oystein, to Skaltek AB. Arrangement in a cable winding machine. 4,371,308, Cl. 414-416.000.
Skaltek AB: *See—*
Skalleberg, Oystein, 4,371,308, Cl. 414-416.000.
Skatsche, Othmar; Wagner, Johann; and Obermayer, Bertram, to List, Hans. Assembly of auxiliary equipment for a water-cooled internal combustion engine. 4,370,957, Cl. 123-196.0AB.
Skogstrom, Lars: *See—*
Bernander, Karl-Gustav; and Skogstrom, Lars, 4,371,031, Cl. 165-54.000.
Skrzypiec, Zbigniew: *See—*
Karowiec, Krzysztof; Sedlaczek, Janusz; Mura, Alojzy; Pawelczyk, Jerzy; and Skrzypiec, Zbigniew, 4,371,477, Cl. 261-30.000.
Skytrends, Inc.: *See—*
George, Richard D.; and Vanhulle, Gary L., 4,371,204, Cl. 296-218.000.
Sliwka, Wolfgang: *See—*
Hoffman, Dietrich; and Sliwka, Wolfgang, 4,371,634, Cl. 523-208.000.
Smirnov, Jury V.: *See—*
Mitin, Leonid A.; Mitrofanov, Vladislav V.; Fadeev, Vladimir Y.; Fadeev, Petr Y.; Korobkov, Vladlen V.; Kulagin, Rim A.; Vorozheikin, Anatoly A.; Ermilov, Nikolai P.; Smirnov, Jury V.; and Besedin, Ivan A., 4,370,916, Cl. 91-173.000.
Smith, Dexter E.: *See—*
Stewart, William S.; Funk, Gary L.; and Smith, Dexter E., 4,371,944, Cl. 364-502.000.
Smith, Donald R.: *See—*
Baxter, Duane W.; Evjen, Joseph L., Jr.; Hoveland, William C.; Roble, Roy A.; Smith, Donald R.; and Wirz, John H., 4,371,902, Cl. 360-75.000.
Smith, E. Quimby, Jr., to Q Corporation. Energy device powered by the motion of water beneath waves. 4,371,788, Cl. 290-42.000.
Smith, Fred T., to Sargent Industries, Inc. Refuse compaction apparatus and method. 4,371,304, Cl. 414-293.000.
Smith, Fred T., to Sargent Industries, Inc. Refuse ejection apparatus. 4,371,306, Cl. 414-325.000.
Smith, Harry D., Jr.; and Dodge, Carl, to Halliburton Company. In situ measurement of gas content in formation fluid. 4,370,886, Cl. 73-153.000.
Smith International, Inc.: *See—*
Morrill, Charles D.; and Best, Michael J. A., 4,371,005, Cl. 138-89.000.
Morrill, Charles D.; Des Lierres, John M.; and Copeland, Louis E., 4,371,291, Cl. 405-169.000.
Smith, James L., to United States of America, Army. Real-time transformation of incoherent light images to edge-enhanced darkfield representation for cross-correlation applications. 4,371,866, Cl. 340-146.30F.
Smith & Nephew Associated Companies, Ltd.: *See—*
Sanderson, Brian A., 4,370,981, Cl. 128-334.00R.
Smith, Peter R.: *See—*
Fry, Jeremy J.; and Smith, Peter R., 4,370,902, Cl. 74-625.000.
Smith, Richard L., Jr., to SSC Industries, Inc. Product for delinting cottonseed. 4,371,449, Cl. 252-142.000.
Smith, Walter A.: *See—*
Edwards, Gordon L., Jr.; and Smith, Walter A., 4,371,963, Cl. 371-50.000.
Smith, William B., to Pipe Line Development Co., The. Method and apparatus for prenotching a pipeline. 4,370,995, Cl. 137-15.000.
Smrekar, Joseph J., to Milliken Research Corporation. Process for dyeing textile materials in solid shades. 4,371,371, Cl. 8-531.000.
Snia Viscosa Societa' Nazionale Industria Applicazioni Viscosa S.p.A.: *See—*
Benai, Tommaso; Leoncini, Novello; and Paoletti, Ugo, 4,371,491, Cl. 264-196.000.
Snyder, Larry L., to Jarva, Inc. Tunnel boring machine and method of operating same. 4,371,211, Cl. 299-11.000.
Societa' Pneumatici Pirelli S.p.A.: *See—*
Canevari, Cesare; and Signorini, Aldo, 4,371,025, Cl. 152-352.00R.
Societe Anonyme Dite: Corneloup S.A.: *See—*
Arnaud, Claude B., 4,370,847, Cl. 56-330.000.
Societe Nationale Industrielle Aerospatiale: *See—*
Marello, Georges; and Vermalle, Jean-Claude, 4,371,134, Cl. 244-173.000.
SODIP: *See—*
Benattar, Robert; and Cronenberger, Michel, 4,371,438, Cl. 210-232.000.
Sofue, Masahisa: *See—*
Murayama, Akira; Harada, Fumio; Arata, Tetsuya; Itagaki, Masato; Nakayama, Susumu; and Sofue, Masahisa, 4,371,319, Cl. 417-312.000.
Sogo Pharmaceutical Co. Ltd.: *See—*
Okazaki, Tethuharu; Komukai, Takeo; and Uchikuga, Saburo, 4,371,472, Cl. 260-453.0RY.
Soligno, Vincenzo. Tube support grid. 4,371,035, Cl. 165-162.000.
Solitt, Samuel G.; and Shaw, Jerry. Jewelry display device. 4,371,077, Cl. 206-45.140.
Solmat: *See—*
Assaf, Gad, 4,370,860, Cl. 60-641.110.
Soltysyk, Alex N. Coating composition for roads and other surfaces comprising chlorinated rubber, chlorinated paraffin and amorphous silica. 4,371,633, Cl. 523-172.000.
Solvay & Cie.: *See—*
Noel, Stephane, 4,371,678, Cl. 526-83.000.
Soma, Nobuo; Moromura, Syoji; Yoshioka, Takao; and Kurumada, Tomoyuki, to Sankyo Company Ltd. Piperidine derivatives and their use as polymer stabilizers. 4,371,644, Cl. 524-102.000.
Somerville, Ronald L.: *See—*
Anderson, David M.; Herrmann, Klaus M.; and Somerville, Ronald L., 4,371,614, Cl. 435-108.000.
Sone, Shigenori: *See—*
Mihara, Takao; Morichika, Toshiaki; and Sone, Shigenori, 4,371,775, Cl. 219-121.0PK.
Sonoco Products Company: *See—*
Case, Manson D., 4,371,130, Cl. 242-125.100.
Sontheimer, Carl G.; and Podell, Allen F., to Cuisinarts, Inc. Magnetic safety interlock method and apparatus for food processor. 4,371,118, Cl. 241-30.000.
Sorimachi, Mitsuo, to Hosiden Electronics Co., Ltd. Coil spring biased current limiter. 4,371,859, Cl. 337-365.000.
Southern Case, Inc.: *See—*
Dembicks, Andrew E., 4,371,079, Cl. 206-349.000.
Southwire Company: *See—*
Ogletree, Robert H., 4,371,395, Cl. 75-129.000.
Spangler, Paul J.; and Koslo, Robert C., to ETC, Incorporated. Integral electrical connector and method for making same. 4,371,229, Cl. 339-223.00R.
Spector, George: *See—*
Fermeglia, Gildo; and Spector, George, 4,371,284, Cl. 403-301.000.
Kroh, Norma J.; and Spector, George, 4,370,870, Cl. 66-1.00A.
Spectronics, Inc.: *See—*
Biard, James R.; and Elmer, Ben R., 4,371,847, Cl. 330-307.000.
Speed Systems, Inc.: *See—*
Maytham, Walter J., 4,370,808, Cl. 30-353.000.
Sperry Corporation: *See—*
Campbell, Willis R.; Freimuth, John H.; Diederich, Anthony F., Jr.; and Jennings, Richard E., 4,370,848, Cl. 56-341.000.
Gamble, Edward B., 4,371,846, Cl. 330-278.000.
Lee, Patrick S., 4,371,842, Cl. 330-141.000.
Munro, James A., 4,370,924, Cl. 100-189.000.
Shelly, Randolph D. W., 4,371,826, Cl. 320-21.000.
Spie-Batignolles: *See—*
Chabrier, Gilbert, 4,371,197, Cl. 285-47.000.
Spielau, Paul; Vohwinkel, Horst; and Kuhnel, Werner, to Dynamit Nobel Aktiengesellschaft. Molding compositions based on ester-compatible thermoplastic and/or elastomeric synthetic resins. 4,371,654, Cl. 524-296.000.
Sprecker, Mark A.: *See—*
Kiwala, Jacob; Tokarzewski, Richard J.; Schmitt, Frederick L.; and Sprecker, Mark A., 4,371,715, Cl. 568-659.000.
Springhill Laboratories, Inc.: *See—*
Goldberg, Jerome; and Bloch, Christopher D., 4,371,191, Cl. 280-707.000.
SSC Industries, Inc.: *See—*
Smith, Richard L., Jr., 4,371,449, Cl. 252-142.000.
Staebler, David L., to RCA Corporation. Method of restoring degraded solar cells. 4,371,738, Cl. 136-243.000.
Staeubli Ltd.: *See—*
Schwarz, Rudolf, 4,371,006, Cl. 139-68.000.
Stahlhofen, Willi: *See—*
Gebhart, Josef; Heigwer, Gerhard; Heyder, Joachim; and Stahlhofen, Willi, 4,370,986, Cl. 128-716.000.
STAL-LAVAL Apparat AB: *See—*
Stendahl, Gunnar, 4,371,033, Cl. 165-104.160.
Stamatoff, Gelu S.: *See—*
Baxter, Warren N.; Merckling, Nicholas G., deceased; Masukawa, Noelle K., administratrix; Robinson, Ivan M.; and Stamatoff, Gelu S., 4,371,680, Cl. 526-159.000.
Stamicarbon, B.V.: *See—*
Boesten, Wilhelmus H. J.; and Schiepers, Lambertus A. C., 4,371,464, Cl. 260-112.50R.

Standard Oil Company: *See—*
Webb, Thomas H.; Vest, Hugh F.; and Chan, Keng S., 4,371,447, Cl. 252-73.000.
Standard Oil Company (Indiana): *See—*
Fields, Ellis K.; and Nimry, Tayseer S., 4,371,701, Cl. 549-235.000.
Lee, Richard J.; and Baranowski, Leonard J., 4,371,712, Cl. 568-430.000.
Stanger, Bernd: *See—*
Druschke, Wolfgang; Kerckow, Albrecht; and Stanger, Bernd, 4,371,659, Cl. 524-599.000.
Stanley, Philip E.: *See—*
Barlow, George J.; Stanley, Philip E.; and Brown, Richard P., 4,371,928, Cl. 364-200.000.
Steel, Norman R.: *See—*
Perolls, Roland F.; and Steel, Norman R., 4,370,845, Cl. 53-572.000.
Steels, Gordon, to Baker Perkins Holdings Limited. Apparatus for making confectionery. 4,371,329, Cl. 425-437.000.
Steffen, Klaus-Dieter; and Thallmeier, Manfred, to Dynamit Nobel AG. Method of preparing oligomeric brominous xylylene bisphenol ethers. 4,371,709, Cl. 568-33.000.
Stein, Hermann; and Piepenbrink, Ulrich, to Vorwerk & Sohn GmbH & Co. KG. Emergency running ring for pneumatic vehicle tires. 4,371,024, Cl. 152-158.000.
Stein, Reinhardt P., to American Home Products Corporation. CNS Stimulants. 4,371,539, Cl. 424-272.000.
Stein, Reinhardt P., to American Home Products Corporation. 3-[1-(Hydroxymethyl)-2-phenylethyl]-N-[(phenylamino)-carbonyl]sydnone imine. 4,371,697, Cl. 548-125.000.
Steinbeck, Hermann: *See—*
Hofmeister, Helmut; Petzoldt, Karl; Annen, Klaus; Laurent, Henry; Wiechert, Rudolf; and Steinbeck, Hermann, 4,371,529, Cl. 424-243.000.
Steinicke, Wolfgang; Badura, Wolfgang; Schiessl, Alois; Weinzierl, Werner; and Krone, Hartmut. Contact head. 4,370,929, Cl. 102-202.000.
Stendahl, Gunnar, to STAL-LAVAL Apparat AB. Gas-to-gas heat exchanger. 4,371,033, Cl. 165-104.160.
Sterling Drug Inc.: *See—*
Munzenmaier, Wolfgang; Eggensperger, Heinz; Ehlers, Helmut H.; Beilfuss, Wolfgang; Bucklers, Lothar; and Harke, Hans-Peter, 4,371,547, Cl. 424-333.000.
Stevens, Samuel B., to Caterpillar Tractor Co. Method for applying, stitching and severing a tape on a body. 4,371,410, Cl. 156-117.000.
Stevenson, David A., to United States of America, Navy. Method for controlling impurities in liquid phase epitaxial growth. 4,371,420, Cl. 156-624.000.
Stewart, William R.; and Simonds, Gary, to Victor United, Inc. Attachment member for securing the ends of cables in a compound bow. 4,370,972, Cl. 124-23.00R.
Stewart, William S.; Funk, Gary L.; and Smith, Dexter E., to Phillips Petroleum Company. Ethylene process control. 4,371,944, Cl. 364-502.000.
Stiefel, Peter: *See—*
Gmelin, Karl; Stiefel, Peter; and Peters, Klaus-Jurgen, 4,370,967, Cl. 123-452.000.
Stihl, Andreas: *See—*
Schurr, Volker; Nickel, Hans; Hoppner, Klaus; Kohler, Gisbert; Weiss, Hermann; and Wieland, Dieter, 4,370,810, Cl. 30-382.000.
Stills, Melvin L.: *See—*
Mauldin, Donald M.; and Jones, Richard E., III, 4,370,977, Cl. 128-80.00F.
Stock, Arthur J.; and Christopher, Donald S., to Stock Equipment Company. Reversing ratchet door closer. 4,371,201, Cl. 292-251.000.
Stock Equipment Company: *See—*
Stock, Arthur J.; and Christopher, Donald S., 4,371,201, Cl. 292-251.000.
Stoelting Co.: *See—*
Peterson, Donald A., 4,371,880, Cl. 346-140.00R.
Stone, David S.: *See—*
Cohn, Seymour B.; Karp, Arthur; and Stone, David S., 4,371,854, Cl. 333-252.000.
Stoss, Peter, to Heinrich Mack Nachf. Chem-Parm. Fabrik. Process for the production of isosorbide-5-nitrate. 4,371,703, Cl. 549-464.000.
Stoyanov, Ben: *See—*
Phipps, Arthur L.; and Stoyanov, Ben, 4,371,488, Cl. 264-51.000.
Strader, Don S., to Motor Wheel Corporation. Bearing hub and carrier assembly for a driven steering wheel unit. 4,371,214, Cl. 301-126.000.
Strasser, Robert A.; and Goch, Stephen W., to Ford Motor Company. End cap for a propellant container. 4,370,930, Cl. 102-530.000.
Strathman, Michael D.; Sadana, Devendra K.; and True, Richard B., to United States of America, Energy. High power linear pulsed beam annealer. 4,371,774, Cl. 219-121.0EA.
Streifer, William: *See—*
Scifres, Donald R.; Streifer, William; and Burnham, Robert D., 4,371,966, Cl. 372-45.000.
Stricker, Stanley S. Gate panel operator for side dumping vehicles. 4,371,208, Cl. 298-23.00D.
Stroh, Walter; and Schwab, Manfred, to Robert Bosch GmbH. Method and apparatus for computing motor speeds for initiating and ending jolt control during gearshift in a drive system using fluid couplings or torque converters. 4,370,903, Cl. 74-858.000.
Stroh, Walter: *See—*
Muller, Alfred; Schwab, Manfred; and Stroh, Walter, 4,370,904, Cl. 74-858.000.
Sturesson, Rune K. Eccentric element. 4,370,894, Cl. 74-87.000.
Sturm, Bernd, to Coronet-Metallwarenfabrik GmbH. Sleeve for connecting a handle to a tool. 4,371,282, Cl. 403-277.000.
Suga, Hiroyuki: *See—*
Ohashi, Shigeo; and Suga, Hiroyuki, 4,371,767, Cl. 200-335.000.
Sugier, Andre: *See—*
Chauvin, Yves; Commereuc, Dominique; and Sugier, Andre, 4,371,627, Cl. 518-700.000.
Sugihara, Kunihiko: *See—*
Muranaka, Shigeo; Sugihara, Kunihiko; and Takeuchi, Kiyoshi, 4,370,964, Cl. 123-425.000.
Sugimori, Shiro: *See—*
Daitoku, Koichi; Sekine, Kenji; Matsukawa, Nobuo; and Sugimori, Shiro, 4,371,244, Cl. 354-173.000.
Sugimoto, Takashi: *See—*
Nagatsu, Toshiharu; Kato, Takeshi; Yamaguchi, Tokio; Akino, Miki; Matsuura, Sadao; and Sugimoto, Takashi, 4,371,514, Cl. 424-1.000.
Sugino, Takashi: *See—*
Wada, Masaru; Shimizu, Hirokazu; Sugino, Takashi; and Itoh, Kunio, 4,371,967, Cl. 372-45.000.
Sugita, Kazuhiko: *See—*
Suzuki, Hiroshi; Shibata, Kunio; and Sugita, Kazuhiko, 4,371,216, Cl. 384-118.000.
Sugiura, Saburo: *See—*
Hasegawa, Kazumasa; Ito, Minao; Sugiura, Saburo; Yamano, Kiyoichi; and Hayakawa, Shizunori, 4,371,392, Cl. 75-10.00R.
Sugiyama, Masatoshi; Nakanishi, Ichiro; Ogawa, Akira; and Maekawa, Masakazu, to Fuji Photo Film Co., Ltd. Ink jet recording sheet. 4,371,582, Cl. 428-341.000.
Sulesky, Donald J., to Polaroid Corporation. Apparatus for opening a film processing kit. 4,371,248, Cl. 354-304.000.
Sulzer Brothers Limited: *See—*
Simson, Dionizy, 4,371,009, Cl. 139-452.000.
Sumitomo Chemical Company, Limited: *See—*
Hino, Minoru; and Oshima, Takao, 4,371,665, Cl. 525-109.000.
Saito, Kenji; and Yamachika, Hiroshi, 4,371,711, Cl. 568-310.000.
Sumitomo Heavy Industries, Inc.: *See—*
Tsukuda, Toshio, 4,371,150, Cl. 266-155.000.
Sumitomo, Hiroyuki: *See—*
Yamada, Ken'ichi; Sumitomo, Hiroyuki; Horiguchi, Akira; and Masutani, Kenzo, 4,371,034, Cl. 165-108.000.
Sumitomo Light Metal Ind., Ltd.: *See—*
Nagata, Koji; Nishikawa, Mamoru; and Sato, Shiro, 4,370,944, Cl. 118-302.000.
Sumitomo Metal Industries, Ltd.: *See—*
Takeuchi, Osamu; Kokubun, Haruo; Yoshinaga, Hisashi; Hara, Shuichi; and Ban, Hiromichi, 4,371,149, Cl. 266-90.000.
Sunbeam Plastics Corporation: *See—*
Gach, Peter P., 4,371,088, Cl. 215-220.000.
Montgomery, Gary V.; and McAlinden, Daniel P., 4,371,095, Cl. 222-153.000.
Sundmar, Goran: *See—*
Gustavsson, Olle; and Sundmar, Goran, 4,370,915, Cl. 89-47.000.
Sunsearch, Inc.: *See—*
Clark, Peter D., 4,371,139, Cl. 248-237.000.
Surgant, John M.: *See—*
Le Clair, Francis J.; and Surgant, John M., 4,371,390, Cl. 71-93.000.
Surzhikov, Vitaly A.: *See—*
Kopysky, Boris D.; Dmitriev, Viktor D.; Khaustov, Georgy I.; Brodsky, Viktor M.; Surzhikov, Vitaly A.; Semenov, Evgeny I.; Chus, Vladimir G.; Misjulya, Viktor A.; Kandyba, Leonid F.; Ivanov, Igor P.; Bezzub, Grigory I.; Goldenberg, Yasha F.; Zonnenberg, Ilya S.; Paly, Alexandr G.; and Malkin, Arkady S., 4,370,879, Cl. 72-377.000.
Sutter, Hans-Rudolf, to Bulova Watch Co., Inc. D-C Voltage converter for a wristwatch. 4,371,269, Cl. 368-205.000.
Suwa, Kaname, to Canon Kabushiki Kaisha. Battery containing mechanism of a compact electronic instrument. 4,371,595, Cl. 429-98.000.
Suzuki, Hidetaka: *See—*
Yamaki, Kiyoshi; Mizote, Masanori; Takeda, Hitoshi; Suzuki, Hidetaka; Nomura, Hiroyuki; Kawasaki, Teruo; and Mori, Kazuyuki, 4,371,940, Cl. 364-444.000.
Suzuki, Hiroshi; Shibata, Kunio; and Sugita, Kazuhiko, to Toyoda Koki Kabushiki Kaisha. Fluid bearing. 4,371,216, Cl. 384-118.000.
Suzuki, Kanji, to Kabushiki Kaisha Kinrei Kikai Seisakusho. Stranding device of a stranding machine. 4,370,849, Cl. 57-71.000.
Suzuki, Takahiko: *See—*
Kageyama, Hidehei; and Suzuki, Takahiko, 4,371,277, Cl. 401-54.000.
Suzuki, Yasuo; Nagata, Shuji; and Yasuda, Kazumi, to Nippon Steel Corporation. Method and apparatus for cutting metal pieces into narrower widths. 4,370,910, Cl. 83-876.000.
Suzumura, Takashi: *See—*
Ando, Toshinari; Nishi, Masataka; Shimamoto, Susumu; Yoshida, Hiromichi; Suzumura, Takashi; Kakizaki, Kimio; Yamagishi, Ryozo; and Ogata, Hisanao, 4,371,741, Cl. 174-15.00S.
Svoboda, Josef; and Szabo, Emilie, to TMC Corporation. Ski brake. 4,371,187, Cl. 280-605.000.
Swartout, Bruce E., to U.S. Flywheels, Inc. Flywheel for kinetic energy storage. 4,370,899, Cl. 74-572.000.
Swiss Aluminium Ltd.: *See—*
Moser, Robert; and Jungblut, Gottfried, 4,371,333, Cl. 432-3.000.
Switzer, Jay A.; and Moorehead, Eric L., to Union Oil Company of California. Photoelectrochemical generation of thallium(III). 4,371,431, Cl. 204-59.00R.

Sybron Corporation: *See—*
Grunert, Hans C.; and Becker, Heinz, 4,371,223, Cl. 312-325.000.
Symphar S.A.: *See—*
Bentzen, Craig L.; Nguyen Mong, Lan; and Niesor, Eric, 4,371,527, Cl. 424-204.000.
Synergistics Research Corporation: *See—*
Ferris, Daniel B.; Trossman, Martin M.; and Luchsinger, Charles R., 4,371,166, Cl. 273-157.00R.
Sysolin, Petr V.; Zaitsev, Ivan I.; Pekerman, Gary M.; Kurzov, Jury P.; Tompakov, Alexandr E.; Maljuchenkov, Valery A.; and Kabachenko, Alexandr S. Automatic coupling device to connect tractor and tractor-drawn means hydraulic systems. 4,371,004, Cl. 137-899.000.
Szabo, Emilie: *See—*
Svoboda, Josef; and Szabo, Emilie, 4,371,187, Cl. 280-605.000.
Szantho, Charles F.; and Riordan, Edward D., to Joyal Products, Inc. Plural shaft electrode support for fusing machine. 4,371,772, Cl. 219-89.000.
Szell, Valeria: *See—*
Jarai, Miklos; Piukovich, Sandor; Istvan, Sandor; Gado, Istvan; Szell, Valeria; and Barta, Istvan, 4,371,622, Cl. 435-253.000.
Szporny, Laszlo: *See—*
Urogdi, Laszlo; Patthy nee Lukats, Agnes; Kisfaludy, Lajos; Moravcsik, Erno; Tudos nee Feuer, Helga; Otvos, Laszlo; Tegyei, Zsuzsanna; Palosi, Eva; Sarkadi, Adam; and Szporny, Laszlo, 4,371,534, Cl. 424-248.550.
Taiho Pharmaceutical Company Limited: *See—*
Fujimura, Hajime; Hiramatsu, Yasuzo; Yabuuchi, Takahiro; Hisaki, Masakatu; Takikawa, Katsuo; Honna, Takaji; Miyake, Hidekazu; and Kajitani, Makoto, 4,371,544, Cl. 424-322.000.
Unemi, Norio; Kitazato, Kenji; and Fujii, Setsuro, 4,371,535, Cl. 424-251.000.
Takada, Juichiro. Belt anti-slip device for vehicle safety belt systems. 4,371,193, Cl. 280-806.000.
Takada, Susumu, to Agency of Industrial Science & Technology; and Ministry of International Trade & Industry. Josephson logic gate device. 4,371,796, Cl. 307-476.000.
Takahashi, Hiroshi; and Satoh, Masatoshi, to Kioritz Corporation. Power chain saw. 4,370,809, Cl. 30-381.000.
Takahashi, Munetoshi; and Kato, Takashi, to Kabushiki Kaisha Meiji Gomu Kasei. Gravity structure. 4,371,292, Cl. 405-224.000.
Takahashi, Yosuke: *See—*
Asao, Tomohiro; and Takahashi, Yosuke, 4,370,954, Cl. 123-182.000.
Takamura, Tsutomu: *See—*
Honma, Hideo; Ikari, Kunihiro; Sasaki, Osamu; Sasabe, Toshiki; Takeda, Kasuhiro; and Takamura, Tsutomu, 4,371,397, Cl. 106-1.230.
Takano, Toshimasa: *See—*
Uchida, Kohachi; Nakatomi, Yoshitsugu; Takano, Toshimasa; and Mukai, Hideo, 4,371,252, Cl. 355-3.0CH.
Takashima, Kunihide: *See—*
Harase, Jiro; Takashima, Kunihide; and Nakashima, Shozaburo, 4,371,405, Cl. 148-111.000.
Takata, Zitumi: *See—*
Hamada, Kaduto; Takata, Zitumi; and Numata, Katuhisa, 4,371,487, Cl. 264-49.000.
Takaya, Takao; Masugi, Takashi; Ogino, Takashi; and Tsuji, Kiyoshi, to Fujisawa Pharmaceutical Company, Ltd. Cephalosporin compounds. 4,371,531, Cl. 424-246.000.
Takeda Chemical Industries, Ltd.: *See—*
Akimoto, Hiroshi; and Kawai, Akiyoshi, 4,371,533, Cl. 424-248.540.
Takeda, Hitoshi: *See—*
Yamaki, Kiyoshi; Mizote, Masanori; Takeda, Hitoshi; Suzuki, Hidetaka; Nomura, Hiroyuki; Kawasaki, Teruo; and Mori, Kazuyuki, 4,371,940, Cl. 364-444.000.
Takeda, Kasuhiro: *See—*
Honma, Hideo; Ikari, Kunihiro; Sasaki, Osamu; Sasabe, Toshiki; Takeda, Kasuhiro; and Takamura, Tsutomu, 4,371,397, Cl. 106-1.230.
Takeda Lace Co. Ltd.: *See—*
Nakagaki, Noboru; and Fujikawa, Hroaki, 4,370,871, Cl. 66-202.000.
Takeichi, Hitoshi; Furuhata, Hiroshi; Kanno, Ryoichi; Kodaira, Kuniyasu; Ohno, Mitio; and Matumoto, Hirozi, to Kodaira, Kuniyasu. Medical measuring apparatus. 4,370,985, Cl. 128-663.000.
Takeuchi, Kiyoshi: *See—*
Muranaka, Shigeo; Sugihara, Kunihiko; and Takeuchi, Kiyoshi, 4,370,964, Cl. 123-425.000.
Takeuchi, Mikio: *See—*
Kawasaki, Teruo; Nomura, Hiroyuki; and Takeuchi, Mikio, 4,371,864, Cl. 340-62.000.
Takeuchi, Naoki: *See—*
Watanabe, Toshihiko; Takeuchi, Naoki; Tsuruga, Soichi; and Koishi, Tadatsugu, 4,371,107, Cl. 228-32.000.
Takeuchi, Osamu; Kokubun, Haruo; Yoshinaga, Hisashi; Hara, Shuichi; and Ban, Hiromichi, to Ishikawajima-Harima Jukogyo Kabushiki Kaisha; and Sumitomo Metal Industries, Ltd. Apparatus for cooling sheet steel by water spraying. 4,371,149, Cl. 266-90.000.
Takikawa, Katsuo: *See—*
Fujimura, Hajime; Hiramatsu, Yasuzo; Yabuuchi, Takahiro; Hisaki, Masakatu; Takikawa, Katsuo; Honna, Takaji; Miyake, Hidekazu; and Kajitani, Makoto, 4,371,544, Cl. 424-322.000.
Takishima, Yoshiyuki; Uchidoi, Masanori; Mashimo, Yukio; Aizawa, Hiroshi; and Kwan, Stephen C., to Canon Kabushiki Kaisha; and Texas Instruments Incorporated. Photographic mode selector system. 4,371,243, Cl. 354-43.000.
Takito, Tetsuo: *See—*
Horita, Yoshiharu; Fujimoto, Kenichi; Hoshino, Michio; Takito, Tetsuo; and Muraki, Masayoshi, 4,371,726, Cl. 585-3.000.
Tamm, Rolf G. A., to Bodenseewerk Perkin-Elmer & Co., GmbH. Holder for absorption spectrometer atomizing furnace capsules. 4,371,262, Cl. 356-312.000.
Tammen, Bobby J. Top dice roulette game. 4,371,165, Cl. 273-147.000.
Tan-Atichat, Eddie: *See—*
De, Bimal B.; Gierut, Lawrence G.; Krakau, Herbert B.; Naik, Kirit; and Tan-Atichat, Eddie, 4,371,754, Cl. 179-18.0EE.
Tanaka, Akio; Edamura, Mizuo; Furuitsu, Satoshi; and Kunise, Satoru, to Kawasaki Jukogyo Kabushiki Kaisha. Ion-nitriding apparatus. 4,371,787, Cl. 422-186.060.
Tanaka, Akira, to American Safety Equipment Corp. Seat belt retractor assembly with pawl mounted pendulum. 4,371,128, Cl. 242-107.40A.
Tanaka, Hideharu: *See—*
Uchikawa, Fusaoki; Tanaka, Hideharu; Sekiya, Mutsuo; and Ohata, Yasufumi, 4,371,581, Cl. 428-304.400.
Tanaka, Junzo: *See—*
Yoshimura, Hirofumi; Tanaka, Junzo; and Ikeda, Nobuo, 4,371,769, Cl. 219-10.55F.
Tanaka, Kenichi, to Kakuichi Co. Ltd. Process for manufacturing synthetic resin hose having a reinforcing member embedded therein and apparatus thereof. 4,371,415, Cl. 156-433.000.
Tanaka, Kentaro; Tsuji, Naoki; Kondo, Eiji; and Kawamura, Yoshimi, to Shionogi & Co., Ltd. Process for preparing thienamycin. 4,371,617, Cl. 435-119.000.
Tanaka, Kimio: *See—*
Okamura, Masatohsi; and Tanaka, Kimio, 4,371,131, Cl. 242-199.000.
Tanaka, Meguru: *See—*
Yanagisawa, Takao; and Tanaka, Meguru, 4,371,475, Cl. 260-512.00R.
Tangorra, Giorgio: *See—*
Cicognani, Mario; Tangorra, Giorgio; and Cimatti, Gianfranco, 4,371,363, Cl. 474-205.000.
Tani, Yoshiki: *See—*
Yamada, Hideaki; Tani, Yoshiki; and Isobe, Kimiyasu, 4,371,621, Cl. 435-191.000.
Taniguchi, Matsuyoshi: *See—*
Wakabayashi, Masayoshi; and Taniguchi, Matsuyoshi, 4,371,250, Cl. 354-325.000.
Taniguchi, Mitsuo: *See—*
Kashiwase, Kohji; Machino, Yasuo; Mita, Muneo; Hiramatsu, Tsunenosuke; Morishita, Toshihiko; and Taniguchi, Mitsuo, 4,371,656, Cl. 524-443.000.
Taniguchi, Yoshihiro: *See—*
Yoshimoto, Takeshi; Hiraoka, Hideki; Okazaki, Seiji; Taniguchi, Yoshihiro; and Harada, Tsutomu, 4,371,260, Cl. 355-77.000.
Tank, Eggert, to Daimler-Benz Aktiengesellschaft. Bucket for an adjustable turbine inlet guide baffle system. 4,371,312, Cl. 415-200.000.
Tanner, Donald M.; and Potts, Herbert M., to Container Corporation of America. Two-cell bulk container tubes. 4,371,109, Cl. 229-28.00R.
Tansil, Thomas B.: *See—*
Matthews, Gordon H.; Tansil, Thomas B.; and Fannin, Michael L., 4,371,752, Cl. 179-7.1TP.
Tanuma, Itsuo: *See—*
Honda, Toshio; Fukuura, Yukio; Ishikawa, Hikaru; Kojima, Shozo; Tanuma, Itsuo; and Ogawa, Masao, 4,371,411, Cl. 156-281.000.
Tatsumi, Hideo: *See—*
Kanamaru, Hisanobu; Okabe, Moisei; Tatsumi, Hideo; and Tohkairin, Akira, 4,370,793, Cl. 29-446.000.
Taylor, Charles H. Applicator for liquid cosmetics. 4,370,989, Cl. 132-79.00B.
Taylor, G. Brandt, to Durkin, William N., a part interest. Solar still. 4,371,623, Cl. 435-290.000.
TBS, Inc.: *See—*
Simons, Peter B., 4,371,015, Cl. 141-352.000.
TDK Electronics Co., Ltd.: *See—*
Izumi, Toshiaki; Saito, Seitoku; Maruta, Fumio; and Kameya, Minoru, 4,371,590, Cl. 428-555.000.
Okamura, Masatohsi; and Tanaka, Kimio, 4,371,131, Cl. 242-199.000.
Okamura, Masatoshi; and Shiba, Haruo, 4,371,286, Cl. 403-407.000.
Teague, Lyndon M. Waste container with permanent lid hold-down assemblies. 4,371,092, Cl. 220-324.000.
Teague, W. Dorwin, Jr., to Murphy Door Bed Company, Inc. Panel bed and counterbalancing mechanism for panel bed. 4,370,766, Cl. 5-133.000.
Tegyei, Zsuzsanna: *See—*
Urogdi, Laszlo; Patthy nee Lukats, Agnes; Kisfaludy, Lajos; Moravcsik, Erno; Tudos nee Feuer, Helga; Otvos, Laszlo; Tegyei, Zsuzsanna; Palosi, Eva; Sarkadi, Adam; and Szporny, Laszlo, 4,371,534, Cl. 424-248.550.
Telettra-telefonia Elettronica e Radio S.p.A.: *See—*
Zingrini, Carlo; and Oreglio, Maurizio, 4,371,083, Cl. 211-26.000.
Terasaki, Masahiro. Cigarette holder smoke filtering cartridge with two stage smoke purification action. 4,370,988, Cl. 131-201.000.
Tetra Pak International AB: *See—*
Pozna, Laszlo, 4,371,768, Cl. 219-10.530.
Rausing, Hans A., 4,371,364, Cl. 493-7.000.
Texaco Development Corporation: *See—*
McEntire, Edward E.; and Gipson, Robert M., 4,371,704, Cl. 549-518.000.

Texaco Inc.: *See—*
Austin, Thomas H., 4,371,629, Cl. 521-115.000.
Brent, Albert; Marion, Charles P.; Richter, George N.; Crouch, William B.; Child, Edward T.; and Reynolds, Blake, 4,371,378, Cl. 48-86.00R.
Brent, Albert; Marion, Charles P.; Richter, George N.; Crouch, William B.; Child, Edward T.; and Reynolds, Blake, 4,371,379, Cl. 48-197.00R.
Lin, Jiang-Jen; and Knifton, John F., 4,371,724, Cl. 568-902.000.
McCoy, David R.; and Naylor, Carter G., 4,371,444, Cl. 252-8.55D.
Nieh, Edward C. Y., 4,371,450, Cl. 252-189.000.
Texas Instruments Incorporated: *See—*
Lien, Jih-Chang; and Chiu, Te-Long, 4,370,798, Cl. 29-576.00B.
Takishima, Yoshiyuki; Uchidoi, Masanori; Mashimo, Yukio; Aizawa, Hiroshi; and Kwan, Stephen C., 4,371,243, Cl. 354-43.000.
Th. Goldschmidt AG: *See—*
Fock, Jurgen; Schedlitzki, Dietmar; Holtschmidt, Ulrich; and Ahrens, Wilhelm, 4,371,683, Cl. 528-60.000.
Thallmeier, Manfred: *See—*
Steffen, Klaus-Dieter; and Thallmeier, Manfred, 4,371,709, Cl. 568-33.000.
Thayer, Theodore B.: *See—*
Off, Joseph W. A.; Early, Judson H.; Roady, Daniel K.; and Thayer, Theodore B., 4,371,074, Cl. 198-339.000.
Thiele, Gerd: *See—*
Bube, Carsten; Dull, Ernst H.; Thiele, Gerd; and Zeller, Hans, 4,371,910, Cl. 361-106.000.
Thir, Basil: *See—*
Newkirk, David D.; Login, Robert B.; and Thir, Basil, 4,371,476, Cl. 260-709.000.
Tholen, Paul, to Klockner-Humboldt-Deutz AG. Auxiliary air heater. 4,371,112, Cl. 237-12.30A.
Thomas & Betts Corporation: *See—*
Hidassy, Laszlo, 4,371,010, Cl. 140-93.00A.
Hidassy, Laszlo, 4,371,011, Cl. 140-93.200.
Narozny, Ronald S., 4,371,225, Cl. 339-97.00C.
Peterpaul, Joseph, 4,370,881, Cl. 72-402.000.
Thomas, Daniel W., to American Cyanamid Co. Particle size reduction of pigments by non-salt milling. 4,371,643, Cl. 524-88.000.
Thomas, Richard E.; Haas, George A.; and Greene, Richard F., to United States of America, Navy. Integral-shadow-grid controlled-porosity dispenser cathode. 4,371,809, Cl. 313-449.000.
Thompson, Roy F., to A. C. Egerton Limited. Heat shrinkable material for wrapping around a pipe, cable or the like. 4,371,578, Cl. 428-192.000.
Thomson-CSF: *See—*
Cornet, Jean, 4,371,954, Cl. 365-126.000.
Deville, Christian; and Lafuma, Philippe, 4,371,852, Cl. 333-157.000.
Lacombat, Michel; and Dubroeucq, Georges, 4,371,264, Cl. 356-356.000.
Thornton, Donald I., to Fram Corporation. Cam actuated filter assembly. 4,371,439, Cl. 210-232.000.
Tietze, Jurgen: *See—*
Danguillier, Wilhelm; Grams, Wolfgang; and Tietze, Jurgen, 4,371,425, Cl. 202-228.000.
Tignol, Adrien P. N.: *See—*
Alicot, Michel J. C.; and Tignol, Adrien P. N., 4,371,698, Cl. 548-177.000.
Tinchant, Xavier: *See—*
Guilpain, Bernard; and Tinchant, Xavier, 4,371,970, Cl. 373-74.000.
Tiollais, Pierre, to Institut Pasteur; and Inst. Nat'l de la Sante et Recherche. Vectors for the insertion therein of foreign DNA fragments, according to any translation phase. 4,371,625, Cl. 435-317.000.
Tischer, Werner, to Zahnradfabrik Friedrichshafen, AG. Hydrostatic steering system. 4,371,002, Cl. 137-625.300.
Titan Tool Co.: *See—*
McKean, John A., 4,371,354, Cl. 464-36.000.
TMC Corporation: *See—*
Svoboda, Josef; and Szabo, Emilie, 4,371,187, Cl. 280-605.000.
Tobita, Etsuo: *See—*
Minagawa, Motonobu; Nakahara, Yutaka; and Tobita, Etsuo, 4,371,647, Cl. 524-120.000.
Toh Zinc Company Limited: *See—*
Yoshizawa, Kiyoshi; Otsuka, Kenichi; Nojiro, Kikuo; Koizumi, Takeo; Mitsutomi, Katsuyoshi; and Nakamura, Seiji, 4,371,440, Cl. 210-601.000.
Tohkairin, Akira: *See—*
Kanamaru, Hisanobu; Okabe, Moisei; Tatsumi, Hideo; and Tohkairin, Akira, 4,370,793, Cl. 29-446.000.
Tohto Kasei Co., Ltd.: *See—*
Hino, Minoru; and Oshima, Takao, 4,371,665, Cl. 525-109.000.
Tokai Electric Wire Company Limited: *See—*
Inoue, Nori, 4,371,230, Cl. 339-242.000.
Tokarzewski, Richard J.: *See—*
Kiwala, Jacob; Tokarzewski, Richard J.; Schmitt, Frederick L.; and Sprecker, Mark A., 4,371,715, Cl. 568-659.000.
Tokes, Szabolcs: *See—*
Podmaniczky, Andras; Tokes, Szabolcs; and Lenk, Attila M., 4,371,964, Cl. 372-38.000.
Tokyo Kogaku Kikai Kabushiki Kaisha: *See—*
Kamiyama, Kiichi; and Oana, Yoshinori, 4,371,237, Cl. 351-245.000.
Tokyo Shibaura Denki Kabushiki Kaisha: *See—*
Andow, Fumio; Kobayashi, Takayuki; Kondow, Ryotaro; and Nii, Yoshiji, 4,371,908, Cl. 361-83.000.
Fujisawa, Norio, 4,371,947, Cl. 364-900.000.
Honma, Hideo; Ikari, Kunihiro; Sasaki, Osamu; Sasabe, Toshiki; Takeda, Kasuhiro; and Takamura, Tsutomu, 4,371,397, Cl. 106-1.230.
Kurosawa, Kei, 4,371,407, Cl. 148-187.000.
Murata, Moriyoshi, 4,371,492, Cl. 264-226.000.
Uchida, Kohachi; Nakatomi, Yoshitsugu; Takano, Toshimasa; and Mukai, Hideo, 4,371,252, Cl. 355-3.0CH.
Yamaura, Mitsuru; Kondow, Ryotaro; Inagaki, Junichi; and Okamoto, Eiichi, 4,371,926, Cl. 364-200.000.
Tokyo Shibaura Electric Co., Ltd.: *See—*
Fukuda, Tsuguo; and Hirano, Hitoshi, 4,371,419, Cl. 156-617.0SP.
Tomita, Tadayoshi: *See—*
Ohsaki, Kozo; Hirokawa, Kazuo; Fukuda, Goro; Otsuka, Kozi; and Tomita, Tadayoshi, 4,371,452, Cl. 252-373.000.
Tompakov, Alexandr E.: *See—*
Sysolin, Petr V.; Zaitsev, Ivan I.; Pekerman, Gary M.; Kurzov, Jury P.; Tompakov, Alexandr E.; Maljuchenkov, Valery A.; and Kabachenko, Alexandr S., 4,371,004, Cl. 137-899.000.
Tone, Fumihiro; and Fujishima, Toshihiko, to Idemitsu Petrochemical Co., Ltd. Three-component resin compositions having improved coating properties. 4,371,662, Cl. 525-89.000.
Tong, Yulan C.: *See—*
Markley, Lowell D.; Tong, Yulan C.; and Wood, Steven G., 4,371,537, Cl. 424-263.000.
Top-Scor Products, Inc.: *See—*
Forsythe, Curtis J., 4,371,561, Cl. 426-653.000.
Topfl, Rosemarie, to Ciba-Geigy Corporation. Mixtures of reaction products based on epoxides, primary amines and fatty acids and of aminoplast precondensates, their preparation and their use as leather dressings. 4,371,637, Cl. 523-416.000.
Tornatore, Giovanni; and Bogetti, Lorenzo, to Fiat Auto S.p.A. Autonomous electrical power generator. 4,371,828, Cl. 322-32.000.
Tortorello, Anthony J.: *See—*
Mylonakis, Stamatios G.; and Tortorello, Anthony J., 4,371,669, Cl. 526-311.000.
Toshiba Silicones, Ltd.: *See—*
Hashimoto, Mitsuyoshi, 4,371,682, Cl. 528-34.000.
Toto, Ltd.: *See—*
Ando, Shizuka; Oyama, Hiroshi; and Yamaguchi, Toshio, 4,370,764, Cl. 4-443.000.
Tousey, Gordon. Marine stern drive cooler. 4,371,351, Cl. 440-88.000.
Toyo Boseki Kabushiki Kaisha: *See—*
Kikuchi, Toshiro; Ogawa, Masaru; and Ando, Makoto, 4,371,620, Cl. 435-189.000.
Toyo Engineering Corporation: *See—*
Ohsaki, Kozo; Hirokawa, Kazuo; Fukuda, Goro; Otsuka, Kozi; and Tomita, Tadayoshi, 4,371,452, Cl. 252-373.000.
Toyo Jozo Company, Ltd.: *See—*
Matsumoto, Kunio; Izumi, Rokuro; Seijo, Hideji; and Mizuguchi, Hiroyuki, 4,371,612, Cl. 435-44.000.
Toyo Kogyo Co., Ltd.: *See—*
Otsuka, Kazutoshi, 4,370,960, Cl. 123-339.000.
Toyo Shokuhinkikai Kabushiki Kaisha: *See—*
Shingo, Hiromichi, 4,371,365, Cl. 493-25.000.
Toyoboseki Kabushiki Kaisha: *See—*
Hamada, Kaduto; Takata, Zitumi; and Numata, Katuhisa, 4,371,487, Cl. 264-49.000.
Toyoda Koki Kabushiki Kaisha: *See—*
Suzuki, Hiroshi; Shibata, Kunio; and Sugita, Kazuhiko, 4,371,216, Cl. 384-118.000.
Toyoda, Shigeru: *See—*
Fujita, Teizo; Dohmoto, Hidetaka; and Toyoda, Shigeru, 4,371,922, Cl. 364-144.000.
Toyoda, Takashi; Itoh, Isamu; and Yamada, Minoru, to Fuji Photo Film Co., Ltd. Process for development-processing silver halide light-sensitive material. 4,371,610, Cl. 430-445.000.
Toyoshima, Shigeshi: *See—*
Sato, Minoru; Hirose, Yoshiteru; and Toyoshima, Shigeshi, 4,371,577, Cl. 428-96.000.
Toyota Jidosha Kabushiki Kaisha: *See—*
Furukubo, Tatsumi, 4,370,950, Cl. 123-41.080.
Kawaguchi, Hiroshi, 4,371,215, Cl. 303-22.00R.
Toyota Jidosha Kogyo Kabushiki Kaisha: *See—*
Nakamura, Norihiko; and Kato, Takashi, 4,371,479, Cl. 261-44.00C.
Nakatomi, Takayoshi, 4,370,968, Cl. 123-488.000.
Shinoda, Kazuo; Higashigawa, Keizo; and Shiozawa, Ken, 4,371,000, Cl. 137-434.000.
Tsuge, Hiroshi; Kawaharazaki, Takashi; and Yasumatsu, Jun, 4,371,126, Cl. 242-107.200.
Toyoto Jidosha Kogyo Kabushiki Kaisha: *See—*
Maruyama, Katsuaki, 4,370,898, Cl. 74-540.000.
Travaux et Produits Routiers: *See—*
Langumier, Georges, 4,371,401, Cl. 106-281.00R.
Triggs, Dennis R.; and Coulter, Howard W. Apparatus for marking preselected measurements. 4,370,811, Cl. 33-32.00R.
Troemner, James O.; Wetrich, Peter D.; and Volz, William A., to Deere & Company. Park-lock mechanism. 4,371,063, Cl. 192-4.00A.
Trossman, Martin M.: *See—*
Ferris, Daniel B.; Trossman, Martin M.; and Luchsinger, Charles R., 4,371,166, Cl. 273-157.00R.

True, Richard B.: *See—*
Strathman, Michael D.; Sadana, Devendra K.; and True, Richard B., 4,371,774, Cl. 219-121.0EA.
Trussell, C. Ward, Jr.; and Miller, James E., to United States of America, Army. Monolithic injection laser arrays formed by crystal regrowth techniques. 4,371,968, Cl. 372-50.000.
Tsatsas, Georges; Costakis, Evan E.; and Foscolos, Georges V., to Etablissements Nativelle S.A. Spiro derivatives, process for their preparation and medications containing same. 4,371,538, Cl. 424-267.000.
Tsaur, Bor-Yeu: *See—*
Fan, John C. C.; Geis, Michael W.; and Tsaur, Bor-Yeu, 4,371,421, Cl. 156-624.000.
Tschanz, Pierre Y. Selectively interconnectable information card holder arrangement. 4,370,820, Cl. 40-388.000.
Tschirner, Wolfgang, to Kleinewefers GmbH. Apparatus for continuously treating strand-like textile material in vertical loops. 4,370,872, Cl. 68-158.000.
Tsuge, Hiroshi; Kawaharazaki, Takashi; and Yasumatsu, Jun, to Toyota Jidosha Kogyo Kabushiki Kaisha; and Kabushiki-Kaisha Tokairika-Denki-Seisakusho. Webbing lock device. 4,371,126, Cl. 242-107.200.
Tsuji, Kiyoshi: *See—*
Takaya, Takao; Masugi, Takashi; Ogino, Takashi; and Tsuji, Kiyoshi, 4,371,531, Cl. 424-246.000.
Tsuji, Naoki: *See—*
Tanaka, Kentaro; Tsuji, Naoki; Kondo, Eiji; and Kawamura, Yoshimi, 4,371,617, Cl. 435-119.000.
Tsuji, Sadahiko, to Canon Kabushiki Kaisha. Range finder. 4,371,261, Cl. 356-1.000.
Tsukuda, Toshio, to Sumitomo Heavy Industries, Inc. Sintering plant. 4,371,150, Cl. 266-155.000.
Tsuruga, Kouji: *See—*
Leistner, William E.; Minagawa, Motonobu; Tsuruga, Kouji; and Harada, Masashi, 4,371,651, Cl. 524-178.000.
Tsuruga, Soichi: *See—*
Watanabe, Toshihiko; Takeuchi, Naoki; Tsuruga, Soichi; and Koishi, Tadatsugu, 4,371,107, Cl. 228-32.000.
Tubbs, Joseph T.: *See—*
Funcik, Jack F.; Bennet, Joseph C.; Tubbs, Joseph T.; and Schneider, Thomas E., 4,370,806, Cl. 29-749.000.
Tudos nee Feuer, Helga: *See—*
Urogdi, Laszlo; Patthy nee Lukats, Agnes; Kisfaludy, Lajos; Moravcsik, Erno; Tudos nee Feuer, Helga; Otvos, Laszlo; Tegyei, Zsuzsanna; Palosi, Eva; Sarkadi, Adam; and Szporny, Laszlo, 4,371,534, Cl. 424-248.550.
Tuggle, Lloyd H., to Emerson Electric Co. Muffler for portable engine. 4,370,855, Cl. 60-317.000.
Tully, Paul R. Method for dyeing eggs. 4,371,555, Cl. 426-250.000.
Turnbull, John, to Celanese Corporation. Belting fabric. 4,370,784, Cl. 28-166.000.
Turner Quick-Lift Corporation: *See—*
Vandenberg, Ervin K., 4,371,190, Cl. 280-705.000.
Turza, Jozef; Kilik, Ondrej; and Rusnak, Jan, to Zavody tazkeho strojarstva, narodni podnik. Hydrostatic sliding element. 4,371,217, Cl. 308-5.00R.
Twiford, Richard L.: *See—*
Moller, George O.; and Twiford, Richard L., 4,370,921, Cl. 99-405.000.
Tyler Refrigeration Corporation: *See—*
Abraham, Fayez F., 4,370,866, Cl. 62-256.000.
Ibrahim, Fayez F., 4,370,867, Cl. 62-256.000.
Tyman, John H. P.: *See—*
Alexiou, Michael S.; Brittain, Philip I.; and Tyman, John H. P., 4,371,694, Cl. 546-100.000.
Tyrell, John A.: *See—*
Rosenquist, Niles R.; and Tyrell, John A., 4,371,650, Cl. 524-162.000.
U.C. Industries: *See—*
Phipps, Arthur L.; and Stoyanov, Ben, 4,371,488, Cl. 264-51.000.
Uchida, Kohachi; Nakatomi, Yoshitsugu; Takano, Toshimasa; and Mukai, Hideo, to Tokyo Shibaura Denki Kabushiki Kaisha. Contact type charging device with pliable contact member. 4,371,252, Cl. 355-3.0CH.
Uchidoi, Masanori: *See—*
Takishima, Yoshiyuki; Uchidoi, Masanori; Mashimo, Yukio; Aizawa, Hiroshi; and Kwan, Stephen C., 4,371,243, Cl. 354-43.000.
Uchikawa, Fusaoki; Tanaka, Hideharu; Sekiya, Mutsuo; and Ohata, Yasufumi, to Mitsubishi Denki Kabushiki Kaisha. Sound absorber. 4,371,581, Cl. 428-304.400.
Uchikuga, Saburo: *See—*
Okazaki, Tethuharu; Komukai, Takeo; and Uchikuga, Saburo, 4,371,472, Cl. 260-453.0RY.
Uchiyama, Hiroki: *See—*
Saruta, Masahiro; and Uchiyama, Hiroki, 4,370,966, Cl. 123-447.000.
Uemura, Hiroshi: *See—*
Kinoshita, Hirotsugu; Uemura, Hiroshi; and Sekiya, Makoto, 4,371,446, Cl. 252-51.50A.
Uemura, Yahiro; Goto, Takashi; Kano, Yoshiaki; and Funakoshi, Satoshi, to Green Cross Corporation, The. Process for preparing immunoglobulin suitable for intravenous injection. 4,371,520, Cl. 424-85.000.
Ulion, Nicholas E.: *See—*
Goebel, Joseph A.; Barkalow, Richard H.; and Ulion, Nicholas E., 4,371,570, Cl. 427-248.100.
Ulmann, Jean-Pierre, to Etablissements Georges Klein. Devices of the turnstile kind for controlling passages requiring authorization. 4,370,825, Cl. 49-47.000.
Ulrich, Gunther: *See—*
Siemens, Walter; Ulrich, Gunther; and Bartusel, Karl R., 4,371,103, Cl. 225-1.000.
Ulrich, Werner, to Bell Telephone Laboratories, Incorporated. Defective short holding-time trunk identifying method. 4,371,758, Cl. 179-175.20C.
Umemoto, Teruo, to Sagami Chemical Research Center. Perfluoroalkyl compounds and process for preparing the same. 4,371,710, Cl. 568-35.000.
Unemi, Norio; Kitazato, Kenji; and Fujii, Setsuro, to Taiho Pharmaceutical Company Limited. Method of and composition for delivering 5-fluorouracil to tumors. 4,371,535, Cl. 424-251.000.
Unglert, Melvin C.: *See—*
Murphy, John J.; Petro, John; and Unglert, Melvin C., 4,371,224, Cl. 316-32.000.
Uni-Cardan AG: *See—*
Petrzelka, Miloslav; and Krude, Werner, 4,371,357, Cl. 464-128.000.
Union Carbide Corporation: *See—*
Jenkins, John M., III; Carter, Max E., Sr.; Green, Michael L.; and Cavender, Marvin E., 4,371,977, Cl. 378-51.000.
Schulz, David A., 4,371,129, Cl. 242-118.700.
Schwartz, Robert D.; and Keller, Frederick A., Jr., 4,371,619, Cl. 435-140.000.
Winn, Jackie L., 4,371,776, Cl. 219-130.510.
Union Oil Company of California: *See—*
Switzer, Jay A.; and Moorehead, Eric L., 4,371,431, Cl. 204-59.00R.
Unique Energy Systems, Inc.: *See—*
Papineau, Ronald I., 4,371,500, Cl. 422-115.000.
U.S. Flywheels, Inc.: *See—*
Swartout, Bruce E., 4,370,899, Cl. 74-572.000.
United States of America
Agriculture: *See—*
Foglia, Thomas A.; Perlstein, Theodore; Nakano, Yoshio; and Maerker, Gerhard, 4,371,469, Cl. 260-405.600.
Air Force: *See—*
Williams, Raymond L., 4,370,854, Cl. 60-261.000.
Army: *See—*
Esaki, Leo; and Chang, Chin-An, 4,371,884, Cl. 357-12.000.
Rodgers, Aubrey, 4,371,784, Cl. 250-231.0GY.
Smith, James L., 4,371,866, Cl. 340-146.30F.
Trussell, C. Ward, Jr.; and Miller, James E., 4,371,968, Cl. 372-50.000.
Energy: *See—*
Davis, Jefferson W., Jr., 4,371,705, Cl. 562-444.000.
McGuire, Patrick L.; and Barraclough, Bruce L., 4,371,045, Cl. 175-17.000.
Strathman, Michael D.; Sadana, Devendra K.; and True, Richard B., 4,371,774, Cl. 219-121.0EA.
Health and Human Services: *See—*
Lee, William W.; Brown, J. Martin; Martinez, Abelardo P.; and Cory, Michael J., 4,371,540, Cl. 424-273.00R.
Pert, Candace B.; and Chang, Jaw-Kang, 4,371,463, Cl. 260-112.50E.
Pitha, Josef, 4,371,673, Cl. 525-426.000.
National Aeronautics and Space Administration; administrator; with respect to an invention of:
Jain, Atul. Clutter free synthetic aperture radar correlator. 4,371,873, Cl. 343-9.0PS.
National Aeronautics and Space Administration: *See—*
Constantinides, Nicholas J.; and Bicknell, Thomas J., 4,371,946, Cl. 364-822.000.
Lawson, Ashby G., 4,371,301, Cl. 411-517.000.
Sheibley, Dean W., 4,371,596, Cl. 429-144.000.
Navy: *See—*
Bloom, Richard L., 4,371,874, Cl. 343-18.00B.
Faccini, Ernest C.; and Wergen, Thomas E., 4,371,771, Cl. 219-70.000.
Griscom, David L., 4,371,838, Cl. 324-244.000.
Henry, John W., IV; and Cassel, David E., 4,371,310, Cl. 415-211.000.
Jensen, James D.; and Schoolar, Richard B., 4,371,232, Cl. 350-1.400.
Morris, Hayden; and Bis, Richard F., 4,371,882, Cl. 357-4.000.
Stevenson, David A., 4,371,420, Cl. 156-624.000.
Thomas, Richard E.; Haas, George A.; and Greene, Richard F., 4,371,809, Cl. 313-449.000.
U.S. Philips Corporation: *See—*
Boeke, Wouter M., 4,371,844, Cl. 330-253.000.
Dijkmans, Eise C.; and Immink, Kornelis A., 4,371,748, Cl. 179-1.00J.
Doussot, Michel; and Courtois, Christian, 4,371,877, Cl. 343-770.000.
Eckert, Wolfgang; Holtkamp, Bernd; and Kilian, Ernst A., 4,371,841, Cl. 330-51.000.
Gotje, Egbert B. G. W.; and Kerstens, Franciscus N. A., 4,371,848, Cl. 331-91.000.
Longley, Stuart R., 4,371,849, Cl. 331-96.000.
Mulder, Cornelis; Nederlof, Leendert; Niessen, Cornelis; Wijnhoven, Rene M. G.; and Salters, Roelof H. W., 4,371,795, Cl. 307-440.000.

Schwarz, Dieter; Misner, Ralf; and Glasbergen, Johannes W., 4,371,972, Cl. 375-30.000.
Van de Grift, Robert E. J.; Van de Plassche, Rudy J.; and Dijkmans, Eise C., 4,371,868, Cl. 340-347.0CC.
van Gorkom, Gerardus G. P.; and Hoeberechts, Arthur M. E., 4,370,797, Cl. 29-569.00R.
Wagner, Wolfgang, 4,371,976, Cl. 378-16.000.
United Technologies Corporation: *See—*
Adams, Don L.; Fischer, William C.; Wright, Stuart C.; and Verzella, David J., 4,371,936, Cl. 364-434.000.
Adams, Don L.; Fischer, William C.; Wright, Stuart C.; and Verzella, David J., 4,371,937, Cl. 364-434.000.
Adams, Don L.; Fischer, William C.; Wright, Stuart C.; and Verzella, David J., 4,371,939, Cl. 364-434.000.
Duhl, David N.; and Nguyen-Dinh, Xuan, 4,371,404, Cl. 148-3.000.
Goebel, Joseph A.; Barkalow, Richard H.; and Ulion, Nicholas E., 4,371,570, Cl. 427-248.100.
Walsh, Thomas C., 4,371,311, Cl. 415-182.000.
Wright, Stuart C.; Adams, Don L.; Fischer, William C.; and Verzella, David J., 4,371,938, Cl. 364-434.000.
University of California, The Regents of the: *See—*
Grodsky, Gerold M.; and Bringer, Jacques, 4,371,523, Cl. 424-178.000.
Hull, Maury L., 4,371,188, Cl. 280-613.000.
UOP Inc.: *See—*
Vickers, Anthony G., 4,371,453, Cl. 252-417.000.
Vickers, Anthony G., 4,371,501, Cl. 422-142.000.
Wagner, Walter R.; and Duda, Richard M., 4,370,919, Cl. 98-122.000.
UPZ kam Vimmess: *See—*
Kyuchukov, Yanko P., 4,371,432, Cl. 204-129.350.
Uranerzbergbau GmbH & Co. KG: *See—*
Bals, Hans G., 4,371,442, Cl. 210-661.000.
Uranium Recovery Corporation: *See—*
Leaders, William M.; and Harrington, Charles D., 4,371,504, Cl. 423-10.000.
Urano, Tadao; and Kaneko, Isamu, to Iwatsu Electric Co., Ltd. One-gun two-beam cathode ray tube. 4,371,808, Cl. 313-411.000.
Urbanc, David J.: *See—*
Pickering, William; and Urbanc, David J., 4,370,891, Cl. 73-861.030.
Urogdi, Laszlo; Patthy nee Lukats, Agnes; Kisfaludy, Lajos; Moravcsik, Erno; Tudos nee Feuer, Helga; Otvos, Laszlo; Tegyei, Zsuzsanna; Palosi, Eva; Sarkadi, Adam; and Szporny, Laszlo, to Richter Gedeon Vegyeszeti Gyar RT. N4-Substituted tetrahydro-1,2,4-oxadiazin-5-one derivatives having anticonvulsive activity and pharmaceutical compositions containing them. 4,371,534, Cl. 424-248.550.
USM Corporation: *See—*
Gordiski, Ronald J.; Bennett, Robert G., Jr.; Parrella, Alfred T.; and Bagnall, Michael, 4,371,941, Cl. 364-475.000.
Kondo, Yoshiteru, 4,371,773, Cl. 219-98.000.
Utagawa, Takashi; Miyoshi, Takeshi; Morisawa, Hirokazu; Yamazaki, Akihiro; Yoshinaga, Fumihiro; and Mitsugi, Koji, to Ajinomoto Company Incorporated. Method for producing purine arabinosides. 4,371,613, Cl. 435-88.000.
Utken, Jay: *See—*
Lipp, Ellis P.; and Utken, Jay, 4,371,862, Cl. 338-174.000.
VALEO Societe Anonyme: *See—*
Billet, Rene, 4,371,068, Cl. 192-98.000.
Valstyn, Erich P.; and Kelley, G. Vinson, to Computer & Communications Technology Corporation. High resolution hall effect read head. 4,371,905, Cl. 360-112.000.
Van Aken, Andre B.: *See—*
Paxson, Timm E.; Kim, Leo; and Van Aken, Andre B., 4,371,716, Cl. 568-678.000.
Van de Grift, Robert E. J.; Van de Plassche, Rudy J.; and Dijkmans, Eise C., to U.S. Philips Corporation. Method and device for the automatic calibration of an analog-to-digital converter. 4,371,868, Cl. 340-347.0CC.
Vandenberg, Ervin K., to Turner Quick-Lift Corporation. Axle suspension system. 4,371,190, Cl. 280-705.000.
van den Berg, Johan H.; and Le Sausse, Robert T., to Champion Spark Plug Europe, S.A. Multi-purpose connector. 4,370,775, Cl. 15-250.320.
Van de Plassche, Rudy J.: *See—*
Van de Grift, Robert E. J.; Van de Plassche, Rudy J.; and Dijkmans, Eise C., 4,371,868, Cl. 340-347.0CC.
Van de Sande, Christian C.; Janssens, Wilhelmus; Lassig, Wolfgang; and Meier, Ernst, to Agfa-Gevaert, N.V. Photographic material suited for use in diffusion transfer photography. 4,371,604, Cl. 430-223.000.
Van de Walker, Peter G., to Outboard Marine Corporation. Cylinder two stroke engine with torsional resonance control. 4,370,953, Cl. 123-55.0VS.
Van Dyk, Garritt C., Jr., to Keene Corporation. Inflatable gasket for radio frequency shielding enclosure. 4,371,175, Cl. 277-34.000.
van Gorkom, Gerardus G. P.; and Hoeberechts, Arthur M. E., to U.S. Philips Corporation. Method of semiconductor device for generating electron beams. 4,370,797, Cl. 29-569.00R.
Vanhulle, Gary L.: *See—*
George, Richard D.; and Vanhulle, Gary L., 4,371,204, Cl. 296-218.000.
Van Iperen, Willem H. P., to Sea-Land Industries, Inc. Vehicle supporting ramps for cargo containers. 4,371,298, Cl. 410-25.000.
Van Laar, Jacobus, to Estel Hoogovens BV. Shaft furnace, particularly the refractory construction of the bottom thereof. 4,371,334, Cl. 432-95.000.
Vanlerberghe, Guy; Sebag, Henri; Zysman, Alexandre; and Dubief, Claude, to L'Oreal. Composition for treating fibrous materials, based on cationic and anionic polymers. 4,371,517, Cl. 424-70.000.
Van Pool, Joe, to Phillips Petroleum Company. Alkylation process. 4,371,732, Cl. 585-723.000.
Vapor Corporation: *See—*
Diamond, John A., 4,371,762, Cl. 200-61.430.
Varca, Robert J.: *See—*
Scordato, Richard E.; and Varca, Robert J., 4,371,498, Cl. 422-102.000.
Varian Associates, Inc.: *See—*
Cohn, Seymour B.; Karp, Arthur; and Stone, David S., 4,371,854, Cl. 333-252.000.
VE.DA. S.r.l: *See—*
Zambelli, Alessio, 4,370,816, Cl. 34-76.000.
VEB Kombinat Polygraph "Werner Lamberz" Leipzig: *See—*
Marx, Karl; Winkler, Klaus; Schmidt, Kurt; and Jentzsch, Joachim, 4,371,158, Cl. 271-103.000.
Weisbach, Gunter; Lucius, Gunter; and Plage, Dieter, 4,370,928, Cl. 101-242.000.
Veco International, Inc.: *See—*
DeVecchi, Francisco, 4,371,386, Cl. 55-338.000.
Velsher, Benne: *See—*
Debortoli, George; Meyerstein, Michael V.; and Velsher, Benne, 4,371,757, Cl. 179-98.000.
Vemag: *See—*
Meier, Dieter, 4,370,779, Cl. 17-49.000.
Vermalle, Jean-Claude: *See—*
Marello, Georges; and Vermalle, Jean-Claude, 4,371,134, Cl. 244-173.000.
Vermillion, Eugene F., to Columbus Show Case Company, The. Curtain wall. 4,370,838, Cl. 52-36.000.
Verzella, David J.: *See—*
Adams, Don L.; Fischer, William C.; Wright, Stuart C.; and Verzella, David J., 4,371,936, Cl. 364-434.000.
Adams, Don L.; Fischer, William C.; Wright, Stuart C.; and Verzella, David J., 4,371,937, Cl. 364-434.000.
Adams, Don L.; Fischer, William C.; Wright, Stuart C.; and Verzella, David J., 4,371,939, Cl. 364-434.000.
Wright, Stuart C.; Adams, Don L.; Fischer, William C.; and Verzella, David J., 4,371,938, Cl. 364-434.000.
Vest, Hugh F.: *See—*
Webb, Thomas H.; Vest, Hugh F.; and Chan, Keng S., 4,371,447, Cl. 252-73.000.
Vesterling, Friedrich, to WNY Hospital Television, Inc. Method and apparatus for affording selective access to additional television channels. 4,371,979, Cl. 455-180.000.
Vickers, Anthony G., to UOP Inc. Fluid catalyst regeneration process and apparatus. 4,371,453, Cl. 252-417.000.
Vickers, Anthony G., to UOP Inc. Fluid catalyst regeneration apparatus. 4,371,501, Cl. 422-142.000.
Victor Company of Japan, Ltd.: *See—*
Yamada, Yasuhiro, 4,371,270, Cl. 371-38.000.
Victor United, Inc.: *See—*
Stewart, William R.; and Simonds, Gary, 4,370,972, Cl. 124-23.00R.
Vidal, Jean-Pierre. System for propulsion of boats by means of winds and streams and for recovery of energy. 4,371,346, Cl. 440-8.000.
Vitzthum, Gunther: *See—*
Mathes, Nikolaus; Pitowski, Hans J.; and Vitzthum, Gunther, 4,371,441, Cl. 210-649.000.
Vlassara, Helen: *See—*
Cerami, Anthony; Brownlee, Michael; and Vlassara, Helen, 4,371,374, Cl. 23-230.00B.
VLSI Technology Research Association: *See—*
Yoshizawa, Rokuro; and Shinozaki, Satoshi, 4,371,423, Cl. 156-653.000.
Voegele, Jean D.; Jourdheuil, Pierre E. J.; Pizzol nee Dalmasso, Jeannine M.; and Pintureau, Bernard C. J., to Institut National de la Recherche Agronomique - UNRA. Method for conditioning and preserving eggs of insect oophage parasites or process for conditioning and preservation of eggs of oophagous parasites of insects. 4,370,946, Cl. 119-1.000.
Voegeli, Ronald. Coin-operated latch mechanism. 4,371,072, Cl. 194-54.000.
Voest-Alpine Aktiengesellschaft: *See—*
Muhlbauer, Gerhard; and Holler, Herbert, 4,371,100, Cl. 222-591.000.
Voetz, Franz J.: *See—*
May, Adolf; Voetz, Franz J.; and Gerl, August, 4,371,399, Cl. 106-109.000.
Vohwinkel, Horst: *See—*
Spielau, Paul; Vohwinkel, Horst; and Kuhnel, Werner, 4,371,654, Cl. 524-296.000.
Voisin, Max. Process for lowering the freezing point of anise essences and anethole by natural products. 4,371,559, Cl. 426-538.000.
Volcovici, David. Electric dispatchers. 4,371,761, Cl. 200-27.0BA.
Voles, Roger, to E M I Limited. Aiming arrangements. 4,370,914, Cl. 89-41.0TV.
Volling, Axel: *See—*
Aichelmann, Dietmar; Kannenberg, Karl; Schutte, Dieter; and Volling, Axel, 4,371,503, Cl. 422-307.000.

Volz, William A.: *See—*

Troemner, James O.; Wetrich, Peter D.; and Volz, William A., 4,371,063, Cl. 192-4.00A.

von Bennigsen-Mackiewicz, Andreas; and von Bennigsen-Mackiewicz, Christoph. Production of powdered sugar. 4,371,117, Cl. 241-18.000.

von Bennigsen-Mackiewicz, Christoph: *See—*

von Bennigsen-Mackiewicz, Andreas; and von Bennigsen-Mackiewicz, Christoph, 4,371,117, Cl. 241-18.000.

Von Genk, Richard A.: *See—*

Kane, Bernard J.; and Von Genk, Richard A., 4,371,722, Cl. 568-828.000.

von Kempski, Walter; and Kirstein, Fritz, to Agfa-Gevaert Aktiengesellschaft. Security filament as protection against fraud. 4,371,196, Cl. 283-7.000.

von Obstfelder, Nikalous. Buoyant soap holder. 4,371,140, Cl. 248-359.000.

von Schneidemesser, Christian; Nowotka, Paul G.; and Rudel, Gerhard, to Wolters, Peter. Working pressure control mechanism. 4,370,835, Cl. 51-165.770.

von Tell, Bjorn R. L. Method and means to fill out uneven surfaces, for example in block boards. 4,371,568, Cl. 427-140.000.

von Werner, Konrad: *See—*

Knoblauch, Wolfgang; and von Werner, Konrad, 4,371,448, Cl. 252-78.100.

Vorozheikin, Anatoly A.: *See—*

Mitin, Leonid A.; Mitrofanov, Vladislav V.; Fadeev, Vladimir Y.; Fadeev, Petr Y.; Korobkov, Vladlen V.; Kulagin, Rim A.; Vorozheikin, Anatoly A.; Ermilov, Nikolai P.; Smirnov, Jury V.; and Besedin, Ivan A., 4,370,916, Cl. 91-173.000.

Vorwerk & Sohn GmbH & Co. KG: *See—*

Stein, Hermann; and Piepenbrink, Ulrich, 4,371,024, Cl. 152-158.000.

Vos, Geert H., to Noordvos Schroeven B.V. Propeller for distributing a gaseous, powdered or liquid material in a liquid. 4,371,480, Cl. 261-87.000.

W. R. Grace & Co.: *See—*

Fusee, Murray C., 4,371,611, Cl. 435-14.000.

Heffernan, Peter C., 4,371,330, Cl. 425-458.000.

Sanchez, Moises G.; and Laine, Norman R., 4,371,513, Cl. 423-625.000.

Wada, Kunihiko: *See—*

Ikubo, Hiroyuki; and Wada, Kunihiko, 4,371,403, Cl. 148-1.500.

Wada, Masaru; Shimizu, Hirokazu; Sugino, Takashi; and Itoh, Kunio, to Matsushita Electric Industrial Co., Ltd. Semiconductor laser. 4,371,967, Cl. 372-45.000.

Wada, Satomi, to Aisan Kogyo Kabushiki Kaisha. Variable venturi carburetor. 4,371,478, Cl. 261-44.00C.

Wagner, Hans: *See—*

Quiring, Bernd; Niederdellmann, Georg; Goyert, Wilhelm; and Wagner, Hans, 4,371,684, Cl. 528-65.000.

Wagner, Johann: *See—*

Skatsche, Othmar; Wagner, Johann; and Obermayer, Bertram, 4,370,957, Cl. 123-196.0AB.

Wagner, Robert J., to Allis-Chalmers Corporation. Self-aligning vehicle door hinges. 4,370,829, Cl. 49-388.000.

Wagner, Rudolf, to Rems-Werk Christian Foll und Sohne GmbH & Co. Cutting head for thread cutting machines. 4,370,770, Cl. 10-96.00R.

Wagner, Walter R.; and Duda, Richard M., to UOP Inc. Vent cap assembly for a monitoring well. 4,370,919, Cl. 98-122.000.

Wagner, Wolfgang, to U.S. Philips Corporation. X-Ray apparatus for determining the absorption distribution in a flat examination zone. 4,371,976, Cl. 378-16.000.

Wahl, Josef; Schmidt, Peter-Jurgen; Birmelin, Jorg; Grob, Ferdinand; Kohler, Rolf; Zabler, Erich; Heintz, Frieder; Bremer, Wolfgang; Kopernick, Viktor; Hugel, Robert; Weigl, Andreas; and Baumann, Gunther, to Robert Bosch GmbH. Vehicle trip computer. 4,371,934, Cl. 364-424.000.

Wakabayashi, Masayoshi; and Taniguchi, Matsuyoshi, to Dainippon Screen Manufacturing Co., Ltd. Developing processor for printing plates having a spray tube developer agitator. 4,371,250, Cl. 354-325.000.

Waldstrom, Ejvind: *See—*

Degn, Kaj; and Waldstrom, Ejvind, 4,370,844, Cl. 53-546.000.

Walker, Cuthbert J.: *See—*

Roggendorff, Stephen; and Walker, Cuthbert J., 4,371,108, Cl. 228-173.00C.

Walker, Harry S., Jr.: *See—*

Jones, Keith A.; and Walker, Harry S., Jr., 4,371,461, Cl. 252-547.000.

Wallis, Christopher J.: *See—*

Collington, Eric W.; Hallet, Peter; Wallis, Christopher J.; and Hayes, Norman F., 4,371,530, Cl. 424-244.000.

Walser, Armin; and Fryer, Rodney I., to Hoffmann-La Roche Inc. Intermediates to produce imidazodiazepines. 4,371,468, Cl. 260-239.0BD.

Walsh, Thomas C., to United Technologies Corporation. Compression section for an axial flow rotary machine. 4,371,311, Cl. 415-182.000.

Walters, John O.: *See—*

Bard, William B.; and Walters, John O., 4,371,499, Cl. 422-111.000.

Walther, William D., to Dayton-Walther Corporation. Edge lugged tire carrying rim and wheel. 4,371,213, Cl. 301-12.00R.

Wanchik, Joseph; and Gabriele, Joseph M., to Contour Fabricators, Inc. Dynamic foam orthosis. 4,370,976, Cl. 128-77.000.

Wang, James C.; Murfitt, Donald; Livingston, Paul H.; and Joson, Luis K., to General Binding Corporation. Universal binding for making variable sized books and reports. 4,371,194, Cl. 281-21.00R.

Wang, James C.; Murfitt, Donald; and Livingston, Paul H., to General Binding Corporation. Cover with adhesive bridges in scored areas. 4,371,195, Cl. 281-21.00R.

Ward, Richard M.: *See—*

Abernathy, William L.; Bertram, Billy B.; Davis, Anthony D.; and Ward, Richard M., 4,371,038, Cl. 166-380.000.

Warner, Joshua B.; and Wolf, James S., to Warner London Inc. Process for depositing protective coating and articles produced. 4,371,589, Cl. 428-553.000.

Warner London Inc.: *See—*

Warner, Joshua B.; and Wolf, James S., 4,371,589, Cl. 428-553.000.

Washer, Stone P., to Phillips Petroleum Company. Alkylation process. 4,371,731, Cl. 585-716.000.

Wasserman, Gary L.: *See—*

Karr, Lawrence J.; Wasserman, Gary L.; and Boehme, George R., 4,371,945, Cl. 364-561.000.

Wasserman, Gary Lee: *See—*

Karr, Lawrence J.; Wasserman, Gary L.; and Boehme, George R., 4,371,945, Cl. 364-561.000.

Watanabe, Kazuhiro: *See—*

Hisatsugu, Kaji; and Watanabe, Kazuhiro, 4,371,454, Cl. 252-422.000.

Watanabe, Kazutomi; Iwasaki, Sokichi; and Baba, Nobuyuki, to Shin Nippon Koki Co., Ltd. Apparatus for painting containers. 4,370,943, Cl. 118-218.000.

Watanabe, Kenkichi, to Laurel Bank Machine Co., Ltd. Coin counting and stopping apparatus for use in a coin handling machine. 4,370,990, Cl. 133-8.00A.

Watanabe, Kiyoshi: *See—*

Ohashi, Takehisa; Shimazaki, Masami; Kan, Kazunori; Kondo, Hideo; and Watanabe, Kiyoshi, 4,371,699, Cl. 548-201.000.

Watanabe, Koji, to Nifco Inc. Tape reel. 4,371,123, Cl. 242-71.800.

Watanabe, Toshihiko; Takeuchi, Naoki; Tsuruga, Soichi; and Koishi, Tadatsugu, to Kobe Steel, Ltd. Welding machine. 4,371,107, Cl. 228-32.000.

Watts, Warren G. Method of covering surfaces with tensile sheet materials. 4,370,792, Cl. 29-407.000.

Weatherford U.K. Limited: *See—*

Lovegrove, Peter J., 4,371,069, Cl. 192-135.000.

Webb, Thomas H.; Vest, Hugh F.; and Chan, Keng S., to Standard Oil Company. Low viscosity water-in-oil microemulsions. 4,371,447, Cl. 252-73.000.

Webber, Gloria C. Envelope for a bed having side rails. 4,370,765, Cl. 5-427.000.

Weber, Klaus: *See—*

Oberstrass, Detley; Hartig, Wolfgang; and Weber, Klaus, 4,370,852, Cl. 57-340.000.

Weible, Karl-Heinz, to Sandoz Ltd. Simultaneous de-sizing and reactive dyeing of cellulose textiles. 4,371,372, Cl. 8-543.000.

Weigl, Andreas: *See—*

Wahl, Josef; Schmidt, Peter-Jurgen; Birmelin, Jorg; Grob, Ferdinand; Kohler, Rolf; Zabler, Erich; Heintz, Frieder; Bremer, Wolfgang; Kopernick, Viktor; Hugel, Robert; Weigl, Andreas; and Baumann, Gunther, 4,371,934, Cl. 364-424.000.

Weimer, Charles M., to Pitney Bowes Inc. Apparatus for interconnecting an actuator and a postage meter. 4,371,781, Cl. 235-101.000.

Weinberger, Theodore, to Adriel Energy Corporation. Fuel additive. 4,371,377, Cl. 44-56.000.

Weinrauch, David. Hair styling accoutrements. 4,371,084, Cl. 211-126.000.

Weinzierl, Klaus; and Karger, Robert, to L. & C. Steinmuller GmbH. Method for operating a flue gas desulfurization. 4,371,508, Cl. 423-242.000.

Weinzierl, Werner: *See—*

Steinicke, Wolfgang; Badura, Wolfgang; Schiessl, Alois; Weinzierl, Werner; and Krone, Hartmut, 4,370,929, Cl. 102-202.000.

Weiperth, Vilmos; and Lezsak, Tibor, to Chemokomplex Vegyipari Gepes Berendezes Export Import Vallalat. Spraying gun. 4,371,114, Cl. 239-309.000.

Weisbach, Gunter; Lucius, Gunter; and Plage, Dieter, to VEB Kombinat Polygraph "Werner Lamberz" Leipzig. Sheet fed rotary press having an auxiliary gripper system arranged below a feeding cylinder. 4,370,928, Cl. 101-242.000.

Weiss, Hermann: *See—*

Schurr, Volker; Nickel, Hans; Hoppner, Klaus; Kohler, Gisbert; Weiss, Hermann; and Wieland, Dieter, 4,370,810, Cl. 30-382.000.

Welsh, James K.: *See—*

Barnes, Derek; Churchland, Mark T.; Herndier, Arnold W.; Schilling, Walter W.; and Welsh, James K., 4,371,020, Cl. 144-366.000.

Welzel, Gerhard: *See—*

Distler, Dieter; Wolf, Hans; and Welzel, Gerhard, 4,371,636, Cl. 523-223.000.

Weresch, Thomas. Apparatus for working leads of electrical components. 4,371,012, Cl. 140-105.000.

Wergen, Thomas E.: *See—*

Faccini, Ernest C.; and Wergen, Thomas E., 4,371,771, Cl. 219-70.000.

Wessa, Theo. Method and apparatus for cooling heated gases or liquids. 4,370,864, Cl. 62-98.000.

West Electric Company, Ltd.: *See—*

Iwata, Hiroshi; Yoshino, Tsunemi; Kashihara, Toshitsugu; and Morioka, Akitoshi, 4,371,245, Cl. 354-198.000.

Western Electric Company, Inc.: *See—*

Camp, Carey A., 4,371,013, Cl. 140-147.000.

Westinghouse Canada Inc.: *See—*

Bignell, Allan M., 4,371,907, Cl. 361-82.000.

Westinghouse Electric Corp.: *See—*

Corth, Richard, 4,371,810, Cl. 313-487.000.

Lawson, Charles A., II; and Dufek, Wayne L., 4,371,496, Cl. 376-258.000.

Marlatt, George R., 4,371,495, Cl. 376-209.000.

McCaskey, Harold O.; and Benson, Melvin E., 4,371,579, Cl. 428-204.000.

Murphy, John J.; Petro, John; and Unglert, Melvin C., 4,371,224, Cl. 316-32.000.

Niehenke, Edward C.; Klein, Gerald I.; and Linsenbardt, Aldo E., 4,371,851, Cl. 333-17.00L.

Salowe, Seymour; and Zinchuk, Thomas C., 4,371,829, Cl. 323-209.000.

Westman, Erik: *See—*

Larsson, Hans G.; and Westman, Erik, 4,371,396, Cl. 419-56.000.

Wetrich, Peter D.: *See—*

Troemner, James O.; Wetrich, Peter D.; and Volz, William A., 4;371,063, Cl. 192-4.00A.

White, Charles C., Jr.: *See—*

Jones, Johnny O., Jr.; and White, Charles C., Jr., 4,371,815, Cl. 318-114.000.

Whittingham, David J.: *See—*

Sankey, Edwin W.; and Whittingham, David J., 4,371,086, Cl. 212-253.000.

Widmayer, Don F., to Controlled Environment Systems, Inc. Light regulation system. 4,371,812, Cl. 315-291.000.

Wiechert, Rudolf: *See—*

Hofmeister, Helmut; Petzoldt, Karl; Annen, Klaus; Laurent, Henry; Wiechert, Rudolf; and Steinbeck, Hermann, 4,371,529, Cl. 424-243.000.

Wieland, Dieter: *See—*

Schurr, Volker; Nickel, Hans; Hoppner, Klaus; Kohler, Gisbert; Weiss, Hermann; and Wieland, Dieter, 4,370,810, Cl. 30-382.000.

Wieser, Alfred. Control circuit for an ultrasonic dental scaler. 4,371,816, Cl. 318-116.000.

Wijnhoven, Rene M. G.: *See—*

Mulder, Cornelis; Nederlof, Leendert; Niessen, Cornelis; Wijnhoven, Rene M. G.; and Salters, Roelof H. W., 4,371,795, Cl. 307-440.000.

Wilcox, Raymond J.; and Powers, Earl W. Mine roof bearing plate. 4,371,293, Cl. 405-259.000.

Wilhelm Hegenscheidt Gesellschaft mbH: *See—*

Berstein, Garri; and Riedel, Walter, 4,371,296, Cl. 407-115.000.

Wilhite, John E.; Shelly, William A.; and Ryan, Charles P., to Honeywell Information Systems Inc. Data processing system programmable pre-read capability. 4,371,927, Cl. 364-200.000.

Wilking, Hans; and Kafitz, Egon, to Keiper Automobiltechnik GmbH & Co. KG. Position adjuster for motor vehicle seats and windows. 4,371,207, Cl. 297-348.000.

Wilkinson, Alan: *See—*

Alford, Derek; and Wilkinson, Alan, 4,371,209, Cl. 299-1.000.

Williams, James F. Flow-controlled injector system. 4,370,996, Cl. 137-99.000.

Williams, Raymond L., to United States of America, Air Force. Fuel valve. 4,370,854, Cl. 60-261.000.

Williams, Sidney J.: *See—*

Braithwaite, John D.; King, Derrick O.; and Williams, Sidney J., 4,370,997, Cl. 137-116.300.

Williams, Victor N. Ankle and foot exercise apparatus. 4,371,161, Cl. 272-96.000.

Willig, Roy L.; LeBlanc, Edward J., III; and Airhart, Harold, Sr., to CRC Wireline, Inc. Simultaneous multigun high density multiphase perforating unit. 4,371,044, Cl. 175-4.600.

Willy A. Bachofen AG: *See—*

Leuthold, Albert, 4,371,119, Cl. 241-66.000.

Wilson, Gerald L.; and Otten, David. DC Ground fault detector wherein fault is sensed by noting imbalance of magnetic flux in a magnetic core. 4,371,832, Cl. 324-51.000.

Wilson, Leon R. Bale wagon. 4,370,796, Cl. 29-564.300.

Wilson, Michael T. Method of forming an adjustable prosthetic element. 4,370,791, Cl. 29-407.000.

Winbigler, Paul H., to Kuhlman Corporation. Spring assembly and method for manufacture thereof. 4,371,154, Cl. 267-179.000.

Windmoller & Holscher: *See—*

Achelpohl, Fritz; and Decker, Werner, 4,371,367, Cl. 493-256.000.

Feldkamper, Richard, 4,370,787, Cl. 29-124.000.

Mundus, Friedhelm, 4,371,413, Cl. 156-349.000.

Winkler, Klaus: *See—*

Marx, Karl; Winkler, Klaus; Schmidt, Kurt; and Jentzsch, Joachim, 4,371,158, Cl. 271-103.000.

Winn, Jackie L., to Union Carbide Corporation. Welding power supply. 4,371,776, Cl. 219-130.510.

Winter, Gerhard: *See—*

Hohn, Richard; Jung, Werner; Winter, Gerhard; and Woerner, Siegfried, 4,371,879, Cl. 346-135.100.

Wintergerst, Siegfried: *See—*

Markfeld, Udo; and Wintergerst, Siegfried, 4,370,896, Cl. 74-339.000.

Wirt, Leslie S., to Lockheed Corporation. Flow duct sound attenuator. 4,371,054, Cl. 181-252.000.

Wirz, John H.: *See—*

Baxter, Duane W.; Evjen, Joseph L., Jr.; Hoveland, William C.; Roble, Roy A.; Smith, Donald R.; and Wirz, John H., 4,371,902, Cl. 360-75.000.

Witte, Wolfgang W. F., to Bodenseewerk Perkin-Elmer & Co., GmbH. Double monochromator. 4,371,263, Cl. 356-333.000.

Wladimiroff, Wladimir: *See—*

Bator, Tadeusz, 4,371,917, Cl. 363-21.000.

WNY Hospital Television, Inc.: *See—*

Vesterling, Friedrich, 4,371,979, Cl. 455-180.000.

Woerner, Siegfried: *See—*

Hohn, Richard; Jung, Werner; Winter, Gerhard; and Woerner, Siegfried, 4,371,879, Cl. 346-135.100.

Woerwag, Peter, to Duepro AG. Electric motor control for vacuum cleaner. 4,370,777, Cl. 15-339.000.

Wolf, Hans: *See—*

Distler, Dieter; Wolf, Hans; and Welzel, Gerhard, 4,371,636, Cl. 523-223.000.

Wolf, James S.: *See—*

Warner, Joshua B.; and Wolf, James S., 4,371,589, Cl. 428-553.000.

Wolfe, James R., Jr., to Du Pont de Nemours, E. I., and Company. Elastomeric polyetheresterimides. 4,371,692, Cl. 528-289.000.

Wolfe, James R., Jr., to Du Pont de Nemours, E. I., and Company. Thermoplastic elastomeric polyetheresterimides. 4,371,693, Cl. 528-292.000.

Wolters, Peter: *See—*

von Schneidemesser, Christian; Nowotka, Paul G.; and Rudel, Gerhard, 4,370,835, Cl. 51-165.770.

Wood, Steven G.: *See—*

Markley, Lowell D.; Tong, Yulan C.; and Wood, Steven G., 4,371,537, Cl. 424-263.000.

Woods, Eugene L.; and Magnuson, Gustav D., to General Dynamics Corporation/Convair Div. External means for detecting normal zones in superconducting magnets or coils. 4,371,943, Cl. 364-481.000.

Woodward, Clifford S., to Rolls Royce Limited. Reversible thrust ducted fan propulsion unit. 4,371,132, Cl. 244-53.00B.

Worthington, Peter: *See—*

Parfree, Colin S.; and Worthington, Peter, 4,371,234, Cl. 350-96.230.

Woss, Gerhard; and Schreiber, Erich, to List, Hans. Operational testing device for inlet valves and outlet valves of reciprocating engines. 4,370,884, Cl. 73-117.300.

Wright, David M., to British Gas Corporation. Friction drive wheels. 4,370,895, Cl. 74-216.000.

Wright, Edward S. Apparatus promoting flow of a body fluid in a human limb. 4,370,975, Cl. 128-64.000.

Wright, Stuart C.; Adams, Don L.; Fischer, William C.; and Verzella, David J., to United Technologies Corporation. Automatic airspeed engage/disengage. 4,371,938, Cl. 364-434.000.

Wright, Stuart C.: *See—*

Adams, Don L.; Fischer, William C.; Wright, Stuart C.; and Verzella, David J., 4,371,936, Cl. 364-434.000.

Adams, Don L.; Fischer, William C.; Wright, Stuart C.; and Verzella, David J., 4,371,937, Cl. 364-434.000.

Adams, Don L.; Fischer, William C.; Wright, Stuart C.; and Verzella, David J., 4,371,939, Cl. 364-434.000.

Wright, Vester L., III, to Franklin Corrugated Design, Inc. Automatic register system for die cutting operations. 4,371,369, Cl. 493-373.000.

Wu, Margaret M., to Mobil Oil Corporation. Selective cracking of disubstituted benzenes having polar substituents. 4,371,721, Cl. 568-750.000.

Wuhrer, Wolfgang: *See—*

Kruppa, Claus; and Wuhrer, Wolfgang, 4,371,350, Cl. 440-69.000.

Wust, Willi: *See—*

Christophliemk, Peter; Wust, Willi; and Carduck, Franz-Josef, 4,371,510, Cl. 423-329.000.

Wyler, Siegfried: *See—*

Zahir, Abdul-Cader; and Wyler, Siegfried, 4,371,719, Cl. 568-723.000.

Xerox Corporation: *See—*

Beery, Jack, 4,371,254, Cl. 355-8.000.

Ciccarelli, Roger N., 4,371,601, Cl. 430-110.000.

Kramer, Charles J., 4,371,897, Cl. 358-294.000.

Mitrovich, Svetislav; and Beaty, Ronald L., 4,371,276, Cl. 400-625.000.

Schank, Richard L.; and Marsh, Dana G., 4,371,600, Cl. 430-56.000.

Scifres, Donald R.; Streifer, William; and Burnham, Robert D., 4,371,966, Cl. 372-45.000.

Yabuuchi, Takahiro: *See—*

Fujimura, Hajime; Hiramatsu, Yasuzo; Yabuuchi, Takahiro; Hisaki, Masakatu; Takikawa, Katsuo; Honna, Takaji; Miyake, Hidekazu; and Kajitani, Makoto, 4,371,544, Cl. 424-322.000.

Yamachika, Hiroshi: *See—*

Saito, Kenji; and Yamachika, Hiroshi, 4,371,711, Cl. 568-310.000.

Yamada, Hideaki; Tani, Yoshiki; and Isobe, Kimiyasu, to Amano Pharmaceutical Co., Ltd. Microbial polyamine oxidase AT-1. 4,371,621, Cl. 435-191.000.

Yamada, Ken'ichi; Sumitomo, Hiroyuki; Horiguchi, Akira; and Masutani, Kenzo, to Hisaka Works, Limited. Plate type evaporator. 4,371,034, Cl. 165-108.000.

Yamada, Minoru: *See—*

Toyoda, Takashi; Itoh, Isamu; and Yamada, Minoru, 4,371,610, Cl. 430-445.000.

Yamada, Ryuji: *See—*

Ito, Keishi; and Yamada, Ryuji, 4,370,856, Cl. 60-389.000.

Yamada, Shinji: *See—*

Miyasaka, Hiroshi; and Yamada, Shinji, 4,371,268, Cl. 368-82.000.

Yamada, Yasuhiro, to Victor Company of Japan, Ltd. Block signal forming digital processor with error correction. 4,371,270, Cl. 371-38.000.

Yamagishi, Ryozo: *See—*
Ando, Toshinari; Nishi, Masataka; Shimamoto, Susumu; Yoshida, Hiromichi; Suzumura, Takashi; Kakizaki, Kimio; Yamagishi, Ryozo; and Ogata, Hisanao, 4,371,741, Cl. 174-15.00S.
Yamagishi, Yoshitaka: *See—*
Miyamoto, Akira; Maeda, Masayoshi; and Yamagishi, Yoshitaka, 4,371,675, Cl. 525-472.000.
Yamaguchi, Tokio: *See—*
Nagatsu, Toshiharu; Kato, Takeshi; Yamaguchi, Tokio; Akino, Miki; Matsuura, Sadao; and Sugimoto, Takashi, 4,371,514, Cl. 424-1.000.
Yamaguchi, Toshio: *See—*
Ando, Shizuka; Oyama, Hiroshi; and Yamaguchi, Toshio, 4,370,764, Cl. 4-443.000.
Yamaha Hatsudoki Kabushiki Kaisha: *See—*
Kimpara, Akiyoshi, 4,370,998, Cl. 137-264.000.
Yamaki, Kiyoshi, to Nissan Motor Company, Limited. Navigation instrument. 4,371,935, Cl. 364-424.000.
Yamaki, Kiyoshi; Mizote, Masanori; Takeda, Hitoshi; Suzuki, Hidetaka; Nomura, Hiroyuki; Kawasaki, Teruo; and Mori, Kazuyuki, to Nissan Motor Co., Ltd. Navigation instrument. 4,371,940, Cl. 364-444.000.
Yamamichi, Masayoshi: *See—*
Ohara, Tsunemasa; and Yamamichi, Masayoshi, 4,371,594, Cl. 429-97.000.
Yamamoto, Noboru; and Yamashita, Iwao, to Agency of Industrial Science & Technology Ministry of International Trade & Industry. Antithrombogenic, highly elastic polyurethane compound. 4,371,686, Cl. 528-76.000.
Yamamuro, Koichi: *See—*
Ojima, Juji; and Yamamuro, Koichi, 4,371,360, Cl. 474-111.000.
Yamane, Ken, to Nissan Motor Company, Ltd. Floating bush and outer bearing structure for mounting a shaft in a body rotatably. 4,371,219, Cl. 384-291.000.
Yamano, Kiyoichi: *See—*
Hasegawa, Kazumasa; Ito, Minao; Sugiura, Saburo; Yamano, Kiyoichi; and Hayakawa, Shizunori, 4,371,392, Cl. 75-10.00R.
Yamashita, Iwao: *See—*
Yamamoto, Noboru; and Yamashita, Iwao, 4,371,686, Cl. 528-76.000.
Yamashita, Sadahiko: *See—*
Makimoto, Mitsuo; and Yamashita, Sadahiko, 4,371,853, Cl. 333-204.000.
Yamaura, Mitsuru; Kondow, Ryotaro; Inagaki, Junichi; and Okamoto, Eiichi, to Tokyo Shibaura Denki Kabushiki Kaisha. Input/output information indication system. 4,371,926, Cl. 364-200.000.
Yamazaki, Akihiro: *See—*
Utagawa, Takashi; Miyoshi, Takeshi; Morisawa, Hirokazu; Yamazaki, Akihiro; Yoshinaga, Fumihiro; and Mitsugi, Koji, 4,371,613, Cl. 435-88.000.
Yanagisawa, Takao; and Tanaka, Meguru, to Showa Kagaku Kogyo Company, Ltd. 1,4-Bis-styryl-benzene derivatives and a process for the preparation of the same. 4,371,475, Cl. 260-512.00R.
Yanmar Diesel Engine Co., Ltd.: *See—*
Asao, Tomohiro; and Takahashi, Yosuke, 4,370,954, Cl. 123-182.000.
Yasuda, Kazumi: *See—*
Suzuki, Yasuo; Nagata, Shuji; and Yasuda, Kazumi, 4,370,910, Cl. 83-876.000.
Yasuda, Kenji: *See—*
Matsumoto, Shuichi; Yasuda, Kenji; Endoh, Masayuki; and Harada, Kunihiro, 4,371,713, Cl. 568-614.000.
Yasumatsu, Jun: *See—*
Tsuge, Hiroshi; Kawaharazaki, Takashi; and Yasumatsu, Jun, 4,371,126, Cl. 242-107.200.
Yinger, Robert J.: *See—*
Henthorne, Michael; Yinger, Robert J.; and DeBold, Terry A., 4,371,394, Cl. 75-128.00A.
Yokoyama, Kenji, to Nippon Gakki Seizo Kabushiki Kaisha. Gain control circuit for pulse width modulation amplifier. 4,371,840, Cl. 330-10.000.
Yoshida, Hiromichi: *See—*
Ando, Toshinari; Nishi, Masataka; Shimamoto, Susumu; Yoshida, Hiromichi; Suzumura, Takashi; Kakizaki, Kimio; Yamagishi, Ryozo; and Ogata, Hisanao, 4,371,741, Cl. 174-15.00S.
Yoshida Kogyo K K: *See—*
Furuminato, Kozo, 4,370,827, Cl. 49-368.000.
Yoshida Kogyo K.K.: *See—*
Hayashi, Moriyoshi, 4,370,841, Cl. 52-464.000.
Yoshida, Masanobu: *See—*
Maeda, Kohichi; and Yoshida, Masanobu, 4,371,956, Cl. 365-185.000.
Yoshimoto, Takeshi; Hiraoka, Hideki; Okazaki, Seiji; Taniguchi, Yoshihiro; and Harada, Tsutomu, to Dainippon Screen Seizo Kabushiki Kaisha. Method for setting up highlight and shadow point density values of original pictures to a picture reproducing machine. 4,371,260, Cl. 355-77.000.
Yoshimura, Hirofumi; Tanaka, Junzo; and Ikeda, Nobuo, to Matsushita Electric Industrial Co., Ltd. Microwave heating apparatus. 4,371,769, Cl. 219-10.55F.
Yoshimura, Shigeru; and Shimizu, Katsuichi, to Canon Kabushiki Kaisha. Apparatus for handling an original and a recording sheet in a recording device. 4,371,256, Cl. 355-14.0SH.
Yoshinaga, Fumihiro: *See—*
Utagawa, Takashi; Miyoshi, Takeshi; Morisawa, Hirokazu; Yamazaki, Akihiro; Yoshinaga, Fumihiro; and Mitsugi, Koji, 4,371,613, Cl. 435-88.000.
Yoshinaga, Hisashi: *See—*
Takeuchi, Osamu; Kokubun, Haruo; Yoshinaga, Hisashi; Hara, Shuichi; and Ban, Hiromichi, 4,371,149, Cl. 266-90.000.
Yoshino Kogyosho Co., Ltd.: *See—*
Nozawa, Takamitsu; Kishi, Takao; and Hinokiyama, Minoru, 4,371,098, Cl. 222-321.000.
Yoshino, Tsunemi: *See—*
Iwata, Hiroshi; Yoshino, Tsunemi; Kashihara, Toshitsugu; and Morioka, Akitoshi, 4,371,245, Cl. 354-198.000.
Yoshioka, Takao: *See—*
Soma, Nobuo; Moromura, Syoji; Yoshioka, Takao; and Kurumada, Tomoyuki, 4,371,644, Cl. 524-102.000.
Yoshizawa, Kiyoshi; Otsuka, Kenichi; Nojiro, Kikuo; Koizumi, Takeo; Mitsutomi, Katsuyoshi; and Nakamura, Seiji, to National Tax Administration Agency; and Toh Zinc Company Limited. Method of treating a waste water rich in protein. 4,371,440, Cl. 210-601.000.
Yoshizawa, Rokuro; and Shinozaki, Satoshi, to VLSI Technology Research Association. Method of manufacturing semiconductor device utilizing a lift-off technique. 4,371,423, Cl. 156-653.000.
Yosimura, Yosikazu, to Hirose Electric Co., Ltd. Electric connector. 4,371,227, Cl. 339-211.000.
Yost, Richard J.: *See—*
Bisbee, Charles B.; and Yost, Richard J., 4,370,840, Cl. 52-410.000.
Yost, Thomas D., to RCA Corporation. Chrominance signal processor. 4,371,891, Cl. 358-31.000.
Younes, Usama E., to Atlantic Richfield Company. Thermoplastic molding composition. 4,371,672, Cl. 525-391.000.
Young, Lewis B., to Mobil Oil Corporation. Preparation of 4-alkylanisoles and phenols. 4,371,714, Cl. 568-628.000.
Young, Vern R.: *See—*
Martin, Verble C.; and Forestal, Robert J., 4,370,842, Cl. 52-514.000.
Younkin, James R., to Edo-Aire Mitchell. Navigation instrument. 4,370,815, Cl. 33-318.000.
Zabler, Erich: *See—*
Wahl, Josef; Schmidt, Peter-Jurgen; Birmelin, Jorg; Grob, Ferdinand; Kohler, Rolf; Zabler, Erich; Heintz, Frieder; Bremer, Wolfgang; Kopernick, Viktor; Hugel, Robert; Weigl, Andreas; and Baumann, Gunther, 4,371,934, Cl. 364-424.000.
Zafferri, Roberto: *See—*
Laesser, Claude; Zafferri, Roberto; and Depery, Jean, 4,371,821, Cl. 318-696.000.
Zaha, Juergen H.: *See—*
Choudhury, Hrishikesh; and Zaha, Juergen H., 4,370,992, Cl. 134-100.000.
Zahir, Abdul-Cader; and Wyler, Siegfried, to Ciba-Geigy Corporation. Curable mixtures based on maleimides and propenyl-substituted phenols, and the use thereof. 4,371,719, Cl. 568-723.000.
Zahnradfabrik Friedrichshafen AG: *See—*
Markfeld, Udo; and Wintergerst, Siegfried, 4,370,896, Cl. 74-339.000.
Tischer, Werner, 4,371,002, Cl. 137-625.300.
Zahnradfabrik Friedrichshafen A.G.: *See—*
Goeft, Manfred; and Maurer, Dieter, 4,371,049, Cl. 180-255.000.
Zaidan Hojin Handotai Kenkyu Shinkokai: *See—*
Nishizawa, Junichi, 4,371,412, Cl. 156-345.000.
Zaiko, Edward J.; and Ranken, Paul F., to Ethyl Corporation. Preparation of 2-(2-fluoro-4-biphenylyl)propionic acid and corresponding nitride. 4,371,473, Cl. 260-465.00G.
Zaitsev, Ivan I.: *See—*
Sysolin, Petr V.; Zaitsev, Ivan I.; Pekerman, Gary M.; Kurzov, Jury P.; Tompakov, Alexandr E.; Maljuchenkov, Valery A.; and Kabachenko, Alexandr S., 4,371,004, Cl. 137-899.000.
Zambelli, Alessio, to VE.DA. S.r.l. Closed-circuit condensation purifier for gaseous flows containing solvents and moisture. 4,370,816, Cl. 34-76.000.
Zanasi Nigris S.p.A.: *See—*
Cane, Alessandro, 4,371,014, Cl. 141-91.000.
Cane, Alessandro; and Farneti, Arrigo, 4,371,101, Cl. 222-636.000.
Zarrelli, Neal; Bocassi, Joseph V.; and Miller, Robert S., to Zarrelli, Neal. Propane automotive feed system. 4,370,969, Cl. 123-525.000.
Zavody tazkeho strojarstva, narodni podnik: *See—*
Turza, Jozef; Kilik, Ondrej; and Rusnak, Jan, 4,371,217, Cl. 308-5.00R.
Zeiser, Manfred P. Denture mold, and method of and arrangement for its manufacture. 4,371,339, Cl. 433-74.000.
Zeitraeg, Rolf, to Siemens Aktiengesellschaft. Circuit arrangement for compensating phase differences of non-synchronous clock pulse rates of a telecommunication system. 4,371,962, Cl. 370-100.000.
Zeller, Hans: *See—*
Bube, Carsten; Dull, Ernst H.; Thiele, Gerd; and Zeller, Hans, 4,371,910, Cl. 361-106.000.
Zera, Robert D.: *See—*
Silverman, Gary S.; Zera, Robert D.; Kubiatowicz, James F.; and Claussen, Robert L., 4,371,171, Cl. 273-357.000.
Zide, Robert, to Pro-Line, Inc. Face guard mount for helmets. 4,370,759, Cl. 2-424.000.
Zinchuk, Thomas C.: *See—*
Salowe, Seymour; and Zinchuk, Thomas C., 4,371,829, Cl. 323-209.000.
Zingrini, Carlo; and Oreglio, Maurizio, to Telettra-telefonia Elettronica e Radio S.p.A. Universal rack for housing telecommunication equipment. 4,371,083, Cl. 211-26.000.
Zinser-Textilmaschinen GmbH: *See—*
Feiler, Horst; and Konig, Gunter, 4,371,121, Cl. 242-18.0DD.

Zipoy, William L.: *See—*
Dinwiddie, John M., Jr.; Freeman, Bobby J.; Jackson, Timothy; and Zipoy, William L., 4,371,932, Cl. 364-200.000.
Zobel, Frederick A.: *See—*
Pitchon, Esra; Schara, Robert E.; Citarella, William P.; Giacone, Joseph; and Zobel, Frederick A., 4,371,556, Cl. 426-311.000.
Zohler, Steven R.: *See—*
May, John E.; and Zohler, Steven R., 4,371,860, Cl. 338-21.000.
Zonnenberg, Ilya S.: *See—*
Kopysky, Boris D.; Dmitriev, Viktor D.; Khaustov, Georgy I.; Brodsky, Viktor M.; Surzhikov, Vitaly A.; Semenov, Evgeny I.; Chus, Vladimir G.; Misjulya, Viktor A.; Kandyba, Leonid F.; Ivanov, Igor P.; Bezzub, Grigory I.; Goldenberg, Yasha F.; Zonnenberg, Ilya S.; Paly, Alexandr G.; and Malkin, Arkady S., 4,370,879, Cl. 72-377.000.
Zysman, Alexandre: *See—*
Vanlerberghe, Guy; Sebag, Henri; Zysman, Alexandre; and Dubief, Claude, 4,371,517, Cl. 424-70.000.
100426 Canada Ltee.: *See—*
Blier, Daniel, 4,371,057, Cl. 182-184.000.

LIST OF REISSUE PATENTEES

TO WHOM

PATENTS WERE ISSUED ON THE 1ST DAY OF FEBRUARY, 1983

NOTE.—Arranged in accordance with the first significant character or word of the name (in accordance with city and telephone directory practice).

Ahlgren, Carl R., to Allied Corporation. Manufacture of malic acid. Re. 31,139, Cl. 562-582.000.
Allied Corporation: *See—*
Ahlgren, Carl R., Re. 31,139, Cl. 562-582.000.
American Can Company: *See—*
Ossian, William F.; Wildenberg, Thomas S.; and Warmbier, Henry, Re. 31,137, Cl. 156-244.110.
Baxter Travenol Laboratories, Inc.: *See—*
Winchell, David A.; Martin, Jerry D.; and Roe, Frank L., Re. 31,135, Cl. 150-8.000.
FMC Corporation: *See—*
Treves, Gino R., Re. 31,136, Cl. 71-92.000.
Martin, Jerry D.: *See—*
Winchell, David A.; Martin, Jerry D.; and Roe, Frank L., Re. 31,135, Cl. 150-8.000.
Ossian, William F.; Wildenberg, Thomas S.; and Warmbier, Henry, to American Can Company. Pouch. Re. 31,137, Cl. 156-244.110.
Rengo Co., Ltd.: *See—*
Tokuno, Masateru, Re. 31,138, Cl. 156-473.000.
Roe, Frank L.: *See—*
Winchell, David A.; Martin, Jerry D.; and Roe, Frank L., Re. 31,135, Cl. 150-8.000.
Tokuno, Masateru, to Rengo Co., Ltd. Single facer for manufacturing single-faced corrugated board. Re. 31,138, Cl. 156-473.000.
Treves, Gino R., to FMC Corporation. Herbicidal 5-pyrimidinecarbonitriles. Re. 31,136, Cl. 71-92.000.
Warmbier, Henry: *See—*
Ossian, William F.; Wildenberg, Thomas S.; and Warmbier, Henry, Re. 31,137, Cl. 156-244.110.
Wildenberg, Thomas S.: *See—*
Ossian, William F.; Wildenberg, Thomas S.; and Warmbier, Henry, Re. 31,137, Cl. 156-244.110.
Winchell, David A.; Martin, Jerry D.; and Roe, Frank L., to Baxter Travenol Laboratories, Inc. Flexible collapsible containers, and method of molding. Re. 31,135, Cl. 150-8.000.

LIST OF REEXAMINATION PATENTEES

TO WHOM

CERTIFICATES WERE ISSUED

Amway, Allen R., to Plaunt & Anderson Company, Inc. Method and apparatus for detecting and locating fluid leaks. BI 4,083,229, Cl. 73—40.5 A.

Plaunt & Anderson Company, Inc.: *See—*
Amway, Allen R. B1 4,083,229, Cl. 73—40.5 A.

Lineberry, Cletus E.; Buckner, John G.; and Harris, Jimmy W., to Auto-Systems and Services, Inc. B1 4,173,910, Cl. 83—29.
Auto-Systems and Services, Inc.: *See—*
Lineberry, Cletus E.; Buckner, John G.; and Harris, Jimmy W. B1 4,173,910, Cl. 83—29.
Theeuwes, Felix; Damani, Nalinkant C., to Alza Corporation. Osmotically driven active agent dispenser. B1 4,016,880, Cl. 128—260.
Alza Corporation: *See—*
Theeuwes, Felix; Damani, Nalinkant C. B1 4,016,880, Cl. 128—260.

LIST OF DESIGN PATENTEES

A-Teknik Alf Sundberg Aktiebolag: *See—*
Sundberg, Alf H., 267,764, Cl. D6-246.000.
Abbott Laboratories: *See—*
Gross, James R., 267,827, Cl. D32-51.000.
Aladdin Industries, Incorporated: *See—*
Storrs, Harold W., 267,766, Cl. D7-38.000.
Storrs, Harold W., 267,767, Cl. D7-38.000.
Allibert S.A.: *See—*
Vrignaud, Guy, 267,760, Cl. D6-97.000.
Amerock Corporation: *See—*
Pittenger, Teresa R. B., 267,774, Cl. D8-317.000.
Bellini, Mario, to Ing. C. Olivetti & C., S.p.A. Portable electronic typewriter. 267,805, 2-1-83, Cl. D18-1.000.
Birns, Jack. Combined industrial diver's underwater light and ultraviolet inspection light. 267,819, 2-1-83, Cl. D26-37.000.
Bluestein, Bernard B.: *See—*
Guth, Gordon T.; Long, Douglas G.; and Bluestein, Bernard B., 267,821, Cl. D28-38.000.
Braun, Eugen. Warning lamp. 267,787, 2-1-83, Cl. D14-114.000.
Bressler, Irving, to Four Paws Products, Ltd. Pet nursing nipple. 267,814, 2-1-83, Cl. D24-46.000.
Bulgari, Marina, to Zoldia Anstalt. Necklace. 267,788, 2-1-83, Cl. D11-5.000.
Burroughs, Robert C. Calendar. 267,807, 2-1-83, Cl. D19-24.000.
C. R. Bard Inc.: *See—*
Elliott, Donald P.; Halseth, William L.; and King, William R., 267,815, Cl. D24-59.000.
Carroll, James C.; and Johnson, Lewis T., to Phillips Petroleum Company. Chain saw case. 267,754, 2-1-83, Cl. D3-72.000.
Cavalli, Alfredo. Dough machine. 267,771, 2-1-83, Cl. D7-376.000.
Chase, Herbert S. Spice rack. 267,762, 2-1-83, Cl. D6-113.000.
Cherry, Isaac R.: *See—*
Dekker, Frank; and Cherry, Isaac R., 267,798, Cl. D14-11.000.
Clark, Karen G. Plaque. 267,791, 2-1-83, Cl. D11-137.000.
Cohen, Leon H. Shoe sole material. 267,828, 2-1-83, Cl. D92-32.000.
Cohen, Piet, to Materias Plasticas, Limitada. Tower rail. 267,761, 2-1-83, Cl. D6-99.000.
Continental Group, Inc., The: *See—*
Roth, Donald J., 267,779, Cl. D9-434.000.
Walter, John, 267,780, Cl. D9-434.000.
Cook, Richard. Vault dome. 267,829, 2-1-83, Cl. D19-12.000.
Cosrich, Inc.: *See—*
Katz, Phillip; and Sonnenblick, Richard, 267,822, Cl. D28-86.000.
Dekker, Frank; and Cherry, Isaac R., to Del Mar Avionics. Tape cartridge. 267,798, 2-1-83, Cl. D14-11.000.
Del Mar Avionics: *See—*
Dekker, Frank; and Cherry, Isaac R., 267,798, Cl. D14-11.000.
dellaRobbia Incorporated: *See—*
Krabeepetcharat, Pramuan, 267,756, Cl. D6-47.000.
Krabeepetcharat, Pramuan, 267,759, Cl. D6-66.000.
Dornier GmbH: *See—*
Krojer, Hubert, 267,794, Cl. D12-337.000.
Duggan, James E. Combined pasta drying rack and trivet. 267,768, 2-1-83, Cl. D7-76.000.
Dybal, Walter F., to Shelly & Anderson Furniture Mfg. Co., Inc. Sofa. 267,758, 2-1-83, Cl. D6-63.000.
Eddinger, Charles. Pendant. 267,790, 2-1-83, Cl. D11-83.000.
Elliott, Donald P.; Halseth, William L.; and King, William R., to C. R. Bard Inc. Chest drainage bottle. 267,815, 2-1-83, Cl. D24-59.000.
Esaki, Akira; Yamasaki, Tsutomu; and Sakata, Keiji, to Sharp Corporation. Facsimile transceiver. 267,799, 2-1-83, Cl. D14-94.000.
Fairbrother, Peter G., to Glenwood Limited. Combined sun visor and radio receiver. 267,752, 2-1-83, Cl. D2-241.000.

Fielder, Jean C.: *See—*
Litt, Kenneth C.; and Fielder, Jean C., 267,796, Cl. D13-11.000.
Fischer, Karl. Cooking appliance. 267,770, 2-1-83, Cl. D7-346.000.
Four Paws Products, Ltd.: *See—*
Bressler, Irving, 267,814, Cl. D24-46.000.
Garrett, Roger G. Tripod ladder. 267,817, 2-1-83, Cl. D25-63.000.
Glas-Tek, Inc.: *See—*
Skidmore, Wilbert L., 267,793, Cl. D12-156.000.
Glenwood Limited: *See—*
Fairbrother, Peter G., 267,752, Cl. D2-241.000.
Grebe, Phillip M. Simulative tent. 267,811, 2-1-83, Cl. D21-253.000.
Gringer, Donald. Hand scraper. 267,826, 2-1-83, Cl. D32-48.000.
Gross, James R., to Abbott Laboratories. Sponge applicator, or the like. 267,827, 2-1-83, Cl. D32-51.000.
Guth, Gordon T.; Long, Douglas G.; and Bluestein, Bernard B., to Sunbeam Corporation. Hair curler set. 267,821, 2-1-83, Cl. D28-38.000.
Halseth, William L.: *See—*
Elliott, Donald P.; Halseth, William L.; and King, William R., 267,815, Cl. D24-59.000.
Hankin, Myron I. Drip proof cup. 267,765, 2-1-83, Cl. D7-9.000.
Hans Grohe GmbH & Co. KG: *See—*
Haug, Andreas, 267,812, Cl. D23-35.000.
Haug, Andreas, to Hans Grohe GmbH & Co. KG. Dual shower head. 267,812, 2-1-83, Cl. D23-35.000.
Heimdal, Lowell D., to North Iowa Tool and Die. Shovel. 267,772, 2-1-83, Cl. D8-9.000.
Heuer, Jack W., to Heuer-Leonidas S.A. Stop watch. 267,784, 2-1-83, Cl. D10-30.000.
Heuer, Jack W., to Heuer-Leonidas S.A. Stop watch. 267,785, 2-1-83, Cl. D10-30.000.
Heuer-Leonidas S.A.: *See—*
Heuer, Jack W., 267,784, Cl. D10-30.000.
Heuer, Jack W., 267,785, Cl. D10-30.000.
Holcombe, J. L., to Mizell, Emerson H. Insulation support. 267,775, 2-1-83, Cl. D8-380.000.
Holgersson, Lennart; and Mahl, Berne, to Telefonaktiebolaget L M Ericsson. Mounting strip for electric cables or similar articles. 267,776, 2-1-83, Cl. D8-396.000.
Honda Giken Kogyo Kabushiki Kaisha: *See—*
Ohba, Yasuhiro, 267,792, Cl. D12-110.000.
Hori, Kiyoshi, to Nippon Paint Co., Ltd. Paint roller. 267,755, 2-1-83, Cl. D4-38.100.
Huck, Joel C. Image frame. 267,763, 2-1-83, Cl. D6-234.000.
Inaba, Mitsuru: *See—*
Kobayashi, Masaharu; and Inaba, Mitsuru, 267,797, Cl. D14-2.000.
Ing. C. Olivetti & C., S.p.A.: *See—*
Bellini, Mario, 267,805, Cl. D18-1.000.
Iwatani Sangyo Kabushiki Kaisha: *See—*
Tomita, Suteo, 267,820, Cl. D27-42.000.
Johnson, Lewis T.: *See—*
Carroll, James C.; and Johnson, Lewis T., 267,754, Cl. D3-72.000.
Kalvitis, Robert E., to Xerox Corporation. Continuous paper input module. 267,803, 2-1-83, Cl. D16-32.000.
Kalvitis, Robert E., to Xerox Corporation. Tractor feed module for continuous paper. 267,804, 2-1-83, Cl. D16-32.000.
Katz, Phillip; and Sonnenblick, Richard, to Cosrich, Inc. Double-ended cosmetic case. 267,822, 2-1-83, Cl. D28-86.000.
King, William R.: *See—*
Elliott, Donald P.; Halseth, William L.; and King, William R., 267,815, Cl. D24-59.000.
Kobayashi, Masaharu; and Inaba, Mitsuru, to Sony Corporation. Video tape recorder. 267,797, 2-1-83, Cl. D14-2.000.
Krabeepetcharat, Pramuan, to dellaRobbia Incorporated. Cushioned chair. 267,756, 2-1-83, Cl. D6-47.000.
Krabeepetcharat, Pramuan, to dellaRobbia Incorporated. Cushioned seat. 267,759, 2-1-83, Cl. D6-66.000.
Krojer, Hubert, to Dornier GmbH. Aircraft design. 267,794, 2-1-83, Cl. D12-337.000.
Lang, William J. Cleaner can. 267,783, 2-1-83, Cl. D9-499.000.
Leib, Roger K. Chair. 267,757, 2-1-83, Cl. D6-56.000.
Life Power Products, Inc.: *See—*
Wolf, Charles S., 267,786, Cl. D10-81.000.
Linden, Erkki O., to Oy. Fiskars AB. Scissors. 267,773, 2-1-83, Cl. D8-57.000.
Lippert Corporation: *See—*
Lippert, William L., Jr.; and Lippert, Wayne M., 267,813, Cl. D23-55.000.
Lippert, Wayne M.: *See—*
Lippert, William L., Jr.; and Lippert, Wayne M., 267,813, Cl. D23-55.000.
Lippert, William L., Jr.; and Lippert, Wayne M., to Lippert Corporation. Bathtub. 267,813, 2-1-83, Cl. D23-55.000.
Litt, Kenneth C.; and Fielder, Jean C., to Pace Incorporated. Ornamental design for a power supply unit. 267,796, 2-1-83, Cl. D13-11.000.
Long, Douglas G.: *See—*
Guth, Gordon T.; Long, Douglas G.; and Bluestein, Bernard B., 267,821, Cl. D28-38.000.
Lowery, Vernon L.; and Vega, Richard, to Pfeiler & Associates, Engineers, Inc. Clipboard. 267,809, 2-1-83, Cl. D19-88.000.
Lynn, Judith B.: *See—*
Lynn, Robert W.; and Lynn, Judith B., 267,818, Cl. D26-35.000.
Lynn, Robert W.; and Lynn, Judith B. Combined signal, emergency and safety warning light for trucks. 267,818, 2-1-83, Cl. D26-35.000.
Mahl, Berne: *See—*
Holgersson, Lennart; and Mahl, Berne, 267,776, Cl. D8-396.000.
Mallon, William D., to Perrott Engineering Labs, Inc. Battery holder. 267,795, 2-1-83, Cl. D13-10.000.
Mannelly, James P., to Tennant Company. Floor maintenance machine. 267,824, 2-1-83, Cl. D32-16.000.
Materias Plasticas, Limitada: *See—*
Cohen, Piet, 267,761, Cl. D6-99.000.
Mizell, Emerson H.: *See—*
Holcombe, J. L., 267,775, Cl. D8-380.000.
Nagata, Toyohiro. Box. 267,778, 2-1-83, Cl. D9-424.000.
Nashua Corporation: *See—*
Plumb, William L.; and Serbinski, Andrew T., 267,801, Cl. D16-30.000.
Niimi, Kenneth; and Simmons, Richard J., to Reed-Union Corporation. Combined packaging and display container. 267,777, 2-1-83, Cl. D9-347.000.
Nippon Paint Co., Ltd.: *See—*
Hori, Kiyoshi, 267,755, Cl. D4-38.100.
North Iowa Tool and Die: *See—*
Heimdal, Lowell D., 267,772, Cl. D8-9.000.
Ohba, Yasuhiro, to Honda Giken Kogyo Kabushiki Kaisha. Motor tricycle. 267,792, 2-1-83, Cl. D12-110.000.
Orsos, Nicholas M. Combined sign support and clip therefor. 267,810, 2-1-83, Cl. D20-43.000.
Oy. Fiskars AB: *See—*
Linden, Erkki O., 267,773, Cl. D8-57.000.
Pace Incorporated: *See—*
Litt, Kenneth C.; and Fielder, Jean C., 267,796, Cl. D13-11.000.
Panter, Charles W. Portable card imprinter. 267,806, 2-1-83, Cl. D18-14.000.
Perrott Engineering Labs, Inc.: *See—*
Mallon, William D., 267,795, Cl. D13-10.000.
Pfeiler & Associates, Engineers, Inc.: *See—*
Lowery, Vernon L.; and Vega, Richard, 267,809, Cl. D19-88.000.
Phillips Petroleum Company: *See—*
Carroll, James C.; and Johnson, Lewis T., 267,754, Cl. D3-72.000.
Pittenger, Teresa R. B., to Amerock Corporation. Pull. 267,774, 2-1-83, Cl. D8-317.000.
Plumb, William L.; and Serbinski, Andrew T., to Nashua Corporation. Sorter with document holding shelves. 267,801, 2-1-83, Cl. D16-30.000.
Pope, Ozell J. Barbeque smoker. 267,769, 2-1-83, Cl. D7-332.000.
Prange, Charles J., to Sewer Rodding Equipment Co. Sewer line proofer tool. 267,823, 2-1-83, Cl. D32-14.000.
Reed-Union Corporation: *See—*
Niimi, Kenneth; and Simmons, Richard J., 267,777, Cl. D9-347.000.
Roth, Donald J., to Continental Group, Inc., The. Container top. 267,779, 2-1-83, Cl. D9-434.000.
Russo, Thomas J. Combined periodical and writing instrument holder. 267,808, 2-1-83, Cl. D19-78.000.
Sakata, Keiji: *See—*
Esaki, Akira; Yamasaki, Tsutomu; and Sakata, Keiji, 267,799, Cl. D14-94.000.
Samuels, James C. Snow removal device for vehicles. 267,825, 2-1-83, Cl. D32-41.000.
Serbinski, Andrew T.: *See—*
Plumb, William L.; and Serbinski, Andrew T., 267,801, Cl. D16-30.000.
Sewer Rodding Equipment Co.: *See—*
Prange, Charles J., 267,823, Cl. D32-14.000.
Sharp Corporation: *See—*
Esaki, Akira; Yamasaki, Tsutomu; and Sakata, Keiji, 267,799, Cl. D14-94.000.
Shelly & Anderson Furniture Mfg. Co., Inc.: *See—*
Dybal, Walter F., 267,758, Cl. D6-63.000.
Simmons, Richard J.: *See—*
Niimi, Kenneth; and Simmons, Richard J., 267,777, Cl. D9-347.000.
Skidmore, Wilbert L., to Glas-Tek, Inc. Design for a pick-up truck bed enclosure. 267,793, 2-1-83, Cl. D12-156.000.
Sonnenblick, Richard: *See—*
Katz, Phillip; and Sonnenblick, Richard, 267,822, Cl. D28-86.000.
Sony Corporation: *See—*
Kobayashi, Masaharu; and Inaba, Mitsuru, 267,797, Cl. D14-2.000.
Sterling Drug Inc.: *See—*
Thompson, Joseph, 267,781, Cl. D9-447.000.
Thompson, Joseph, 267,782, Cl. D9-447.000.
Storrs, Harold W., to Aladdin Industries, Incorporated. Tray. 267,766, 2-1-83, Cl. D7-38.000.
Storrs, Harold W., to Aladdin Industries, Incorporated. Tray. 267,767, 2-1-83, Cl. D7-38.000.
Sunbeam Corporation: *See—*
Guth, Gordon T.; Long, Douglas G.; and Bluestein, Bernard B., 267,821, Cl. D28-38.000.
Sundberg, Alf H., to A-Teknik Alf Sundberg Aktiebolag. Corner lock for frames. 267,764, 2-1-83, Cl. D6-246.000.
Tate, Jimmy W. Mobile asphalt pavement sealing machine. 267,800, 2-1-83, Cl. D15-13.000.
Telefonaktiebolaget L M Ericsson: *See—*
Holgersson, Lennart; and Mahl, Berne, 267,776, Cl. D8-396.000.
Tennant Company: *See—*
Mannelly, James P., 267,824, Cl. D32-16.000.

Thompson, Joseph, to Sterling Drug Inc. Dispensing cap for a container. 267,781, 2-1-83, Cl. D9-447.000.

Thompson, Joseph, to Sterling Drug Inc. Dispensing cap for a container. 267,782, 2-1-83, Cl. D9-447.000.

Tokyo Shibaura Denki Kabushiki Kaisha: *See—*
Yasutani, Shigeki, 267,802, Cl. D16-31.000.

Tomita, Suteo, to Iwatani Sangyo Kabushiki Kaisha. Gas lighter. 267,820, 2-1-83, Cl. D27-42.000.

Tripp, Donald F. Heat lamp stand. 267,816, 2-1-83, Cl. D24-68.000.

Urban, Bruno. Vehicle article carrier. 267,753, 2-1-83, Cl. D3-40.000.

Vega, Richard: *See—*
Lowery, Vernon L.; and Vega, Richard, 267,809, Cl. D19-88.000.

Vrignaud, Guy, to Allibert S.A. Toilet paper holder. 267,760, 2-1-83, Cl. D6-97.000.

Walter, John, to Continental Group, Inc., The. Container top. 267,780, 2-1-83, Cl. D9-434.000.

Winandy, Carol M. Necklace pendant. 267,789, 2-1-83, Cl. D11-81.000.

Wolf, Charles S., to Life Power Products, Inc. Salt meter. 267,786, 2-1-83, Cl. D10-81.000.

Xerox Corporation: *See—*
Kalvitis, Robert E., 267,803, Cl. D16-32.000.
Kalvitis, Robert E., 267,804, Cl. D16-32.000.

Yamasaki, Tsutomu: *See—*
Esaki, Akira; Yamasaki, Tsutomu; and Sakata, Keiji, 267,799, Cl. D14-94.000.

Yasutani, Shigeki, to Tokyo Shibaura Denki Kabushiki Kaisha. Electronic copying machine. 267,802, 2-1-83, Cl. D16-31.000.

Zoldia Anstalt: *See—*
Bulgari, Marina, 267,788, Cl. D11-5.000.

LIST OF PLANT PATENTEES

Wandell, Willet N. Sugar maple tree named Legacy. 4,979, 2-1-83, Cl. 51.000.

LIST OF DEFENSIVE PUBLICATIONS

APPLICANTS TO WHOM

DEFENSIVE PUBLICATIONS WERE ISSUED ON THE 1st DAY OF FEBRUARY, 1983

Published at the request of the applicant or owner in accordance with the Notice of Dec. 16, 1969, 869 O. G. 687.

Cutler, Robert S.; and Fuller, Sterritt R., Jr. Ink jet ink composition. T102,701, 2-1-83, Cl. 524-562.000.

Fuller, Sterritt R., Jr.: *See—*
Cutler, Robert S.; and Fuller, Sterritt R., Jr., T102,701, Cl. 524-562.000.

CLASSIFICATION OF PATENTS

ISSUED FEBRUARY 1, 1983

NOTE.—First number, class; second number, subclass; third number, patent number

CLASS 2	
2	4,370,754
88	4,370,755
195	4,370,756
400	4,370,757
423	4,370,758
424	4,370,759
CLASS 3	
13	4,370,760
26	4,370,761
CLASS 4	
206	4,370,762
228	4,370,763
443	4,370,764
CLASS 5	
133	4,370,766
417	4,370,767
427	4,370,765
450	4,370,768
452	4,370,769
CLASS 8	
408	4,371,370
531	4,371,371
543	4,371,372
650	4,371,373
CLASS 10	
96 R	4,370,770
CLASS 15	
29	4,370,771
97 R	4,370,772
172	4,370,773
250.2	4,370,774
250.32	4,370,775
319	4,370,776
339	4,370,777
CLASS 17	
45	4,370,778
49	4,370,779
	4,370,780
CLASS 19	
245	4,370,781
CLASS 23	
230 B	4,371,374
CLASS 24	
198	4,370,782
201 TR	4,370,783
CLASS 28	
166	4,370,784
CLASS 29	
25.35	4,370,785
33 M	4,370,786
124	4,370,787
156.4 WL	4,370,788
156.8 H	4,370,789
157 T	4,370,790
407	4,370,791
	4,370,792
446	4,370,793
509	4,370,794
559	4,370,795
564.3	4,370,796
569 R	4,370,797
576 B	4,370,798
597	4,370,799
598	4,370,800
603	4,370,801
	4,370,802
623.4	4,370,803
741	4,370,804
	4,370,805
749	4,370,806
CLASS 30	
41.5	4,370,807
353	4,370,808
381	4,370,809
382	4,370,810
CLASS 33	
32 R	4,370,811
169 R	4,370,812
291	4,370,813
307	4,370,814
318	4,370,815
CLASS 34	
76	4,370,816
CLASS 36	
81	4,370,817
100	4,370,818
CLASS 37	
104	4,370,819
CLASS 40	
388	4,370,820
497	4,370,821
CLASS 42	
1 R	4,370,822
CLASS 43	
7	4,370,823
CLASS 44	
2	4,371,375
10 R	4,371,376
56	4,371,377
CLASS 46	
74 D	4,370,824
CLASS 48	
86 R	4,371,378
197 R	4,371,379
CLASS 49	
47	4,370,825
63	4,370,826
368	4,370,827
383	4,370,828
388	4,370,829
413	4,370,830
477	4,370,831
488	4,370,832
489	4,370,833
CLASS 51	
165.72	4,370,834
165.77	4,370,835
410	4,370,836
CLASS 52	
1	4,370,837
36	4,370,838
169.7	4,370,839
410	4,370,840
464	4,370,841
514	4,370,842
693	4,370,843
CLASS 53	
546	4,370,844
572	4,370,845
CLASS 55	
26	4,371,380
27	4,371,381
92	4,371,382
169	4,371,383
179	4,371,384
190	4,371,385
338	4,371,386
CLASS 56	
6	4,370,846
330	4,370,847
341	4,370,848
CLASS 57	
71	4,370,849
96	4,370,850
340	4,370,851
	4,370,852
	4,370,853
CLASS 60	
261	4,370,854
317	4,370,855
389	4,370,856
413	4,370,857
641.11	4,370,860
641.5	4,370,858
641.6	4,370,859
CLASS 62	
63	4,370,861
66	4,370,862
89	4,370,863
98	4,370,864
124	4,370,865
256	4,370,866
	4,370,867
504	4,370,868
CLASS 65	
118	4,371,387
CLASS 66	
1 A	4,370,870
202	4,370,871
CLASS 68	
158	4,370,872
CLASS 70	
163	4,370,873
204	4,370,874
422	4,370,875
CLASS 71	
90	4,371,388
	4,371,389
92	Re.31,136
93	4,371,390
	4,371,391
CLASS 72	
68	4,370,876
222	4,370,877
345	4,370,878
377	4,370,879
389	4,370,880
402	4,370,881
447	4,370,882
CLASS 73	
117	4,370,883
117.3	4,370,884
153	4,370,885
	4,370,886
204	4,370,887
580	4,370,888
619	4,370,889
718	4,370,890
861.03	4,370,891
861.12	4,370,892
861.61	4,370,893
40.5 A	B1 4,083,229
CLASS 74	
87	4,370,894
216	4,370,895
339	4,370,896
475	4,370,897
540	4,370,898
572	4,370,899
574	4,370,900
586	4,370,901
625	4,370,902
858	4,370,903
	4,370,904
CLASS 75	
10 R	4,371,392
108	4,371,393
128 A	4,371,394
129	4,371,395
CLASS 76	
74	4,370,905
CLASS 81	
464	4,370,906
CLASS 82	
33 R	4,370,907
CLASS 83	
348	4,370,908
437	4,370,909
876	4,370,910
29	B1 4,173,910
CLASS 84	
280	4,370,911
418	4,370,912
CLASS 86	
45	4,370,913
CLASS 89	
41 TV	4,370,914
47	4,370,915
CLASS 91	
173	4,370,916
491	4,370,917
CLASS 92	
163	4,370,918
CLASS 98	
122	4,370,919
CLASS 99	
339	4,370,920
405	4,370,921
572	4,370,922
CLASS 100	
47	4,370,923
189	4,370,924
CLASS 101	
40	4,370,925
207	4,370,926
228	4,370,927
242	4,370,928
CLASS 102	
202	4,370,929
530	4,370,930
CLASS 104	
20	4,370,931
CLASS 105	
163 SK	4,370,932
197 DB	4,370,933
CLASS 106	
1.23	4,371,397
10	4,371,398
109	4,371,399
273 R	4,371,400
281 R	4,371,401
CLASS 109	
1 S	4,370,934
51	4,370,935
CLASS 112	
10	4,370,936
79 A	4,370,937
158 E	4,370,938
262.2	4,370,939
286	4,370,940
CLASS 118	
13	4,370,941
40	4,370,942
218	4,370,943
302	4,370,944
303	4,370,945
CLASS 119	
1	4,370,946
3	4,370,947
72.5	4,370,948
CLASS 122	
20 B	4,370,949
CLASS 123	
41.08	4,370,950
41.74	4,370,951
41.84	4,370,952
55 VS	4,370,953
182	4,370,954
190 BB	4,370,955
196 AB	4,370,956
	4,370,957
276	4,370,958
295	4,370,959
339	4,370,960
352	4,370,961
416	4,370,962
425	4,370,963
	4,370,964
426	4,370,965
447	4,370,966
452	4,370,967
488	4,370,968
525	4,370,969
557	4,370,970
573	4,370,971
CLASS 124	
23 R	4,370,972
CLASS 126	
58	4,370,973
439	4,370,974
CLASS 127	
60	4,371,402
CLASS 128	
64	4,370,975
77	4,370,976
80 C	4,370,978
80 F	4,370,977
303 A	4,370,979
303.17	4,370,980
334 R	4,370,981
630	4,370,983
640	4,370,984
663	4,370,985
716	4,370,986
760	4,370,987
260	B1 4,016,880
CLASS 131	
201	4,370,988
CLASS 132	
79 B	4,370,989
CLASS 133	
8 A	4,370,990
CLASS 134	
76	4,370,991
100	4,370,992
CLASS 135	
19.5	4,370,993
20 B	4,370,994
CLASS 136	
243	4,371,738
251	4,371,739
256	4,371,740
CLASS 137	
15	4,370,995
99	4,370,996
116.3	4,370,997
264	4,370,998
270	4,370,999
434	4,371,000
512.3	4,371,001
625.3	4,371,002
625.46	4,371,003
899	4,371,004
CLASS 138	
89	4,371,005
CLASS 139	
68	4,371,006
348	4,371,008
435	4,371,007
452	4,371,009
CLASS 140	
93 A	4,371,010
93.2	4,371,011
105	4,371,012
147	4,371,013
CLASS 141	
91	4,371,014
352	4,371,015
CLASS 144	
2 Z	4,371,016
3 D	4,371,017
4	4,371,018
193 A	4,371,019
366	4,371,020
CLASS 145	
21	4,371,021
CLASS 148	
1.5	4,371,403
3	4,371,404
111	4,371,405
171	4,371,406
187	4,371,407
CLASS 149	
21	4,371,408
94	4,371,409
CLASS 150	
1.5 R	4,371,022
8	Re.31,135
CLASS 152	
158	4,371,023
	4,371,024
352 R	4,371,025
CLASS 156	
117	4,371,410
244.11	Re.31,137
281	4,371,411
345	4,371,412
349	4,371,413
361	4,371,414
433	4,371,415
441.5	4,371,416
473	Re.31,138
495	4,371,417
497	4,371,418
617 SP	4,371,419
624	4,371,420
	4,371,421
640	4,371,422
653	4,371,423
CLASS 160	
349 D	4,371,026
CLASS 165	
1	4,371,027
10	4,371,028
	4,371,029
54	4,371,031
91	4,371,032
104.16	4,371,033
108	4,371,034
162	4,371,035
163	4,371,036
CLASS 166	
366	4,371,037
380	4,371,038
CLASS 172	
244	4,371,039
CLASS 173	
11	4,371,040
28	4,371,041
127	4,371,042
162 H	4,371,043
CLASS 174	
15 S	4,371,741
36	4,371,742
52 R	4,371,743
68.5	4,371,744
115	4,371,745
CLASS 175	
4.6	4,371,044
17	4,371,045
57	4,371,046
CLASS 178	
18	4,371,746
CLASS 179	
1 GS	4,371,747
	4,371,749
1 J	4,371,748
1 VL	4,371,750
5 R	4,371,751
7.1 TP	4,371,752
18 EE	4,371,754
18 GF	4,371,753
35	4,371,755
	4,371,756
98	4,371,757
175.2 C	4,371,758
CLASS 180	
54 A	4,371,047
69 R	4,371,048
255	4,371,049
271	4,371,050
	4,371,051
287	4,371,052

CLASS 181

249 4,371,053
252 4,371,054

CLASS 182

46 4,371,055
127 4,371,056
184 4,371,057

CLASS 185

11 4,371,058

CLASS 188

71.8 4,371,059
73.38 4,371,060
244 4,371,061

CLASS 192

3.61 4,371,062
4 A 4,371,063
6 A 4,371,064
8 C 4,371,065
85 AA 4,371,066
93 A 4,371,067
98 4,371,068
135 4,371,069

CLASS 194

4 D 4,371,070
4 R 4,371,071
54 4,371,072
102 4,371,073

CLASS 198

339 4,371,074
345 4,371,075
420 4,371,076

CLASS 200

5 A 4,371,760
5 R 4,371,759
27 BA 4,371,761
61.43 4,371,762
61.45 R 4,371,763
61.86 4,371,764
147 R 4,371,765
148 A 4,371,766
335 4,371,767

CLASS 202

159 4,371,424
228 4,371,425

CLASS 203

2 4,371,426
3 4,371,427
51 4,371,428

CLASS 204

4 4,371,429
32 R 4,371,430
59 R 4,371,431
129.35 4,371,432
228 4,371,433
302 4,371,434

CLASS 206

45.14 4,371,077
329 4,371,078
349 4,371,079
531 4,371,080

CLASS 209

44 4,371,435
268 4,371,436
580 4,371,081

CLASS 210

94 4,371,437
232 4,371,438
4,371,439
601 4,371,440
649 4,371,441
661 4,371,442

CLASS 211

22 4,371,082
26 4,371,083
126 4,371,084
149 4,371,085

CLASS 212

253 4,371,086

CLASS 215

12 R 4,371,087
220 4,371,088
256 4,371,089

CLASS 219

10.53 4,371,768
10.55 D 4,371,770
10.55 F 4,371,769
70 4,371,771
89 4,371,772
98 4,371,773
121 EA 4,371,774
121 PK 4,371,775
130.51 4,371,776
298 4,371,777
302 4,371,778
328 4,371,779
446 4,371,780

CLASS 220

224 4,371,090
288 4,371,091
324 4,371,092

CLASS 221

90 4,371,093

CLASS 222

1 4,371,094
153 4,371,095
190 4,371,096
321 4,371,097
4,371,098
4,371,099
591 4,371,100
636 4,371,101

CLASS 223

73 4,371,102

CLASS 225

1 4,371,103
48 4,371,104

CLASS 228

7 4,371,105
19 4,371,106
32 4,371,107
173 C 4,371,108

CLASS 229

28 R 4,371,109
31 FS 4,371,110

CLASS 235

101 4,371,781

CLASS 237

8 R 4,371,111
12.3 A 4,371,112

CLASS 239

201 4,371,113
309 4,371,114
524 4,371,115
720 4,371,116

CLASS 241

18 4,371,117
30 4,371,118
66 4,371,119
284 4,371,120

CLASS 242

18 DD 4,371,121
43 R 4,371,122
71.8 4,371,123
84.51 A 4,371,124
107 4,371,125
107.2 4,371,126
4,371,127
107.4 A 4,371,128
118.7 4,371,129
125.1 4,371,130
199 4,371,131

CLASS 244

53 B 4,371,132
54 4,371,133
173 4,371,134
4,371,135

CLASS 248

49 4,371,136
73 4,371,137
201 4,371,138
237 4,371,139
359 4,371,140
569 4,371,141
573 4,371,142
638 4,371,143
641 4,371,144

CLASS 249

80 4,371,145

CLASS 250

202 4,371,782
227 4,371,783
231 GY 4,371,784
343 4,371,785
4,371,786

CLASS 251

209 4,371,146

CLASS 252

8.55 C 4,371,443
8.55 D 4,371,444
12 4,371,445
51.5 A 4,371,446
73 4,371,447
78.1 4,371,448
142 4,371,449
189 4,371,450
305 4,371,451
373 4,371,452
417 4,371,453
422 4,371,454
429 C 4,371,455
435 4,371,456
437 4,371,457
439 4,371,458
514 4,371,459
522 R 4,371,460
547 4,371,461

CLASS 254

326 4,371,147

CLASS 256

26 4,371,148

CLASS 260

112 R 4,371,462
112.5 E 4,371,463
112.5 R 4,371,464
4,371,465
4,371,466
165 4,371,467
239 BD 4,371,468
405.6 4,371,469
428 4,371,470
438.5 R 4,371,471
453 RY 4,371,472
465 G 4,371,473
465.8 R 4,371,474
512 R 4,371,475
709 4,371,476

CLASS 261

30 4,371,477
44 C 4,371,478
4,371,479
87 4,371,480

CLASS 264

15 4,371,481
40.1 4,371,482
40.6 4,371,483
44 4,371,484
46.1 4,371,485
46.6 4,371,486
49 4,371,487
51 4,371,488
129 4,371,489
162 4,371,490
196 4,371,491
226 4,371,492
236 4,371,493
522 4,371,494

CLASS 266

90 4,371,149
155 4,371,150
186 4,371,151

CLASS 267

103 4,371,152
105 4,371,153
179 4,371,154

CLASS 270

53 4,371,155
54 4,371,156

CLASS 271

2 4,371,157
103 4,371,158
228 4,371,159

CLASS 272

96 4,371,160
4,371,161
134 4,371,162

CLASS 273

54 B 4,371,163
121 A 4,371,164
147 4,371,165
157 R 4,371,166
161 4,371,167
239 4,371,168
271 4,371,169
4,371,170
357 4,371,171

CLASS 277

12 4,371,172
4,371,173
24 4,371,174
34 4,371,175
56 4,371,176
152 4,371,177
154 4,371,178
207 A 4,371,179
230 4,371,180

CLASS 280

5 A 4,371,181
6 H 4,371,182
42 4,371,183
204 4,371,184
227 4,371,185
432 4,371,186
605 4,371,187
613 4,371,188
682 4,371,189
705 4,371,190
707 4,371,191
801 4,371,192
806 4,371,193

CLASS 281

21 R 4,371,194
4,371,195

CLASS 283

7 4,371,196

CLASS 285

47 4,371,197
165 4,371,198
382.2 4,371,199

CLASS 290

42 4,371,788

CLASS 292

48 4,371,205
99 4,371,200
251 4,371,201

CLASS 294

82 R 4,371,202
86 R 4,371,203

CLASS 296

218 4,371,204

CLASS 297

183 4,371,206
348 4,371,207

CLASS 298

23 D 4,371,208

CLASS 299

1 4,371,209
10 4,371,210
11 4,371,211

CLASS 301

9 DN 4,371,212
12 R 4,371,213
126 4,371,214

CLASS 303

22 R 4,371,215

CLASS 307

38 4,371,789
118 4,371,790
141 4,371,791
255 4,371,792
260 4,371,793
269 4,371,794
440 4,371,795
476 4,371,796
577 4,371,797

CLASS 308

5 R 4,371,217
10 4,371,218

CLASS 310

15 4,371,800
80 4,371,798
154 4,371,799
156 4,371,801
166 4,371,802
242 4,371,803
321 4,371,804
334 4,371,805

CLASS 312

199 4,371,221
211 4,371,222
325 4,371,223

CLASS 313

101 4,371,806
318 4,371,807
411 4,371,808
449 4,371,809
487 4,371,810

CLASS 315

241 P 4,371,811
291 4,371,812
377 4,371,813

CLASS 316

32 4,371,224

CLASS 318

16 4,371,814
114 4,371,815
116 4,371,816
254 4,371,817
313 4,371,818
341 4,371,819
468 4,371,820
696 4,371,821
4,371,822
705 4,371,823
722 4,371,824

CLASS 320

5 4,371,825
21 4,371,826
48 4,371,827

CLASS 322

32 4,371,828

CLASS 323

209 4,371,829
265 4,371,830
284 4,371,831

CLASS 324

51 4,371,832
161 4,371,833
167 4,371,834
174 4,371,835
207 4,371,836
225 4,371,837
244 4,371,838

CLASS 329

104 4,371,839

CLASS 330

10 4,371,840
51 4,371,841
141 4,371,842
253 4,371,843
4,371,844
277 4,371,845
278 4,371,846
307 4,371,847

CLASS 331

91 4,371,848
96 4,371,849

CLASS 332

11 D 4,371,850

CLASS 333

17 L 4,371,851
157 4,371,852
204 4,371,853
252 4,371,854

CLASS 335

132 4,371,855
202 4,371,856
259 4,371,857

CLASS 336

100 4,371,858

CLASS 337

365 4,371,859

CLASS 338

21 4,371,860
25 4,371,861
174 4,371,862

CLASS 339

97 C 4,371,225
147 R 4,371,226
211 4,371,227
221 R 4,371,228
223 R 4,371,229
242 4,371,230
275 R 4,371,231

CLASS 340

43 4,371,863
62 4,371,864
146.3 F 4,371,866
146.3 MA 4,371,865
310 R 4,371,867
347 CC 4,371,868
557 4,371,869
716 4,371,870
717 4,371,871
728 4,371,872

CLASS 343

9 PS 4,371,873
18 B 4,371,874
708 4,371,875
768 4,371,876
770 4,371,877

CLASS 346

75 4,371,878
135.1 4,371,879
140 R 4,371,880
4,371,881

CLASS 350

1.4 4,371,232
96.18 4,371,233
96.23 4,371,234
280 4,371,235
357 4,371,236

CLASS 351

106 4,371,238
245 4,371,237

CLASS 352

140 4,371,240
4,371,241

CLASS 353

26 R 4,371,239
101 4,371,242

CLASS 354

43 4,371,243
173 4,371,244
198 4,371,245
299 4,371,246
300 4,371,247
304 4,371,248
4,371,249
325 4,371,250

CLASS 355

3 CH 4,371,252
3 TR 4,371,251
4 4,371,253
8 4,371,254
4,371,255
14 D 4,371,257
14 SH 4,371,256
37 4,371,258
38 4,371,259
77 4,371,260

CLASS 356

1 4,371,261
312 4,371,262
333 4,371,263
356 4,371,264
432 4,371,265

CLASS 357

4 4,371,882
8 4,371,883
12 4,371,884
24 4,371,885
38 4,371,886
4,371,887
59 4,371,890

CLASS 358

31 4,371,891
75 4,371,892
93 4,371,893
136 4,371,895
167 4,371,266
172 4,371,896
294 4,371,897
300 4,371,898
315 4,371,899
342 4,371,894

CLASS 360

40 4,371,900
65 4,371,901
75 4,371,902
4,371,903
77 4,371,904
112 4,371,905

CLASS 361

51 4,371,906
82 4,371,907
83 4,371,908
91 4,371,909
106 4,371,910
124 4,371,911
417 4,371,912

CLASS 362

15 4,371,914
4,371,915
17 4,371,913
31 4,371,916

CLASS 363

21 4,371,917
22 4,371,918
65 4,371,919
160 4,371,920

CLASS 364

138 4,371,921
144 4,371,922
200 4,371,923
4,371,924
4,371,925
4,371,926
4,371,927
4,371,928
4,371,929
4,371,930
4,371,931

4,371,932
300 4,371,933
424 4,371,934
4,371,935
434 4,371,936
4,371,937
4,371,938
4,371,939
444 4,371,940
475 4,371,941
4,371,942
481 4,371,943
502 4,371,944
561 4,371,945
822 4,371,946
900 4,371,947
4,371,948
4,371,949
4,371,950
4,371,951
4,371,952

CLASS 365

103 4,371,953
126 4,371,954
185 4,371,955
4,371,956

CLASS 367

3 4,371,957
85 4,371,958

CLASS 368

74 4,371,267
82 4,371,268
205 4,371,269

CLASS 369

43 4,371,959
4,371,960
126 4,371,961

CLASS 370

100 4,371,962

CLASS 371

38 4,371,270
50 4,371,963

CLASS 372

38 4,371,964
40 4,371,965
45 4,371,966
4,371,967
50 4,371,968
77 4,371,969

CLASS 373

74 4,371,970
115 4,371,971

CLASS 374

183 4,371,271
184 4,371,272

CLASS 375

30 4,371,972
58 4,371,973
82 4,371,974
120 4,371,975

CLASS 376

209 4,371,495
258 4,371,496

CLASS 378

16 4,371,976
51 4,371,977

CLASS 384

118 4,371,216
291 4,371,219
371 4,371,220

CLASS 400

119 4,371,273
121 4,371,274
161.3 4,371,275
625 4,371,276

CLASS 401

54 4,371,277
195 4,371,278

CLASS 403

8 4,371,279
13 4,371,280
219 4,371,281
277 4,371,282
288 4,371,283
301 4,371,284
339 4,371,285
407 4,371,286

CLASS 404

84 4,371,287

CLASS 405

53 4,371,288
150 4,371,289
4,371,290
169 4,371,291
224 4,371,292
259 4,371,293

CLASS 406

109 4,371,294
128 4,371,295

CLASS 407

115 4,371,296

CLASS 408

130 4,371,297

CLASS 410

25 4,371,298
44 4,371,299

CLASS 411

41 4,371,300
517 4,371,301

CLASS 414

22 4,371,302
281 4,371,303
293 4,371,304
300 4,371,305
325 4,371,306
416 4,371,308
676 4,371,309
725 4,371,307

CLASS 415

182 4,371,311
200 4,371,312
211 4,371,310
215 4,371,313

CLASS 416

20 A 4,371,314

CLASS 417

5 4,371,315
41 4,371,316
298 4,371,317
304 4,371,318
312 4,371,319
461 4,371,320

CLASS 418

45 4,371,321
47 4,371,322
55 4,371,323
201 4,371,324

CLASS 419

56 4,371,396

CLASS 422

12 4,371,497
102 4,371,498
111 4,371,499
115 4,371,500
142 4,371,501
186.06 4,371,787
249 4,371,502
307 4,371,503

CLASS 423

10 4,371,504
4,371,505
24 4,371,506
230 4,371,507
242 4,371,508
300 4,371,509
329 4,371,510
456 4,371,511
551 4,371,512
625 4,371,513

CLASS 424

1 4,371,514
22 4,371,516
70 4,371,517
78 4,371,518
81 4,371,519
85 4,371,520
94 4,371,521
153 4,371,522
178 4,371,523
180 4,371,524
184 4,371,525
200 4,371,526
204 4,371,527
241 4,371,528
243 4,371,529
244 4,371,530
246 4,371,531
248.51 4,371,532
248.54 4,371,533
248.55 4,371,534
251 4,371,535
256 4,371,536
263 4,371,537
267 4,371,538
272 4,371,539
273 R 4,371,540
4,371,541
274 4,371,542
319 4,371,543
322 4,371,544
330 4,371,545
4,371,546
333 4,371,547
365 4,371,548

CLASS 425

63 4,371,325
71 4,371,326
218 4,371,327
344 4,371,328
437 4,371,329
458 4,371,330

CLASS 426

3 4,371,549
16 4,371,550
28 4,371,551
50 4,371,552
124 4,371,553
243 4,371,554
250 4,371,555
311 4,371,556
321 4,371,557
332 4,371,558
538 4,371,559
643 4,371,560
653 4,371,561
656 4,371,562

CLASS 427

34 4,371,563
35 4,371,564
41 4,371,565
53.1 4,371,566
130 4,371,567
140 4,371,568
230 4,371,569
248.1 4,371,570
285 4,371,571
298 4,371,572
438 4,371,573

CLASS 428

35 4,371,574
81 4,371,575
92 4,371,576
96 4,371,577
192 4,371,578
204 4,371,579
250 4,371,580
304.4 4,371,581
341 4,371,582
358 4,371,583
392 4,371,584
412 4,371,585
437 4,371,586
446 4,371,587
448 4,371,588
553 4,371,589
555 4,371,590

CLASS 429

88 4,371,591
91 4,371,592
97 4,371,593
4,371,594
98 4,371,595
144 4,371,596
153 4,371,597

CLASS 430

22 4,371,598
49 4,371,599
56 4,371,600
110 4,371,601
175 4,371,602
218 4,371,603
223 4,371,604
280 4,371,605
281 4,371,606
4,371,607
315 4,371,608
373 4,371,609
445 4,371,610

CLASS 431

151 4,371,331

CLASS 432

1 4,371,332
3 4,371,333
95 4,371,334
4,371,335

CLASS 433

6 4,371,336
10 4,371,337
60 4,371,338
74 4,371,339
4,371,340
118 4,371,341
225 4,371,342

CLASS 434

29 4,371,343
302 4,371,344
368 4,371,345

CLASS 435

14 4,371,611
44 4,371,612
88 4,371,613
105 4,371,616
108 4,371,614
115 4,371,615
119 4,371,617
128 4,371,618
140 4,371,619
189 4,371,620
191 4,371,621
253 4,371,622
290 4,371,623
291 4,371,624
317 4,371,625

CLASS 436

544 4,371,515

CLASS 440

8 4,371,346
9 4,371,347
52 4,371,348
56 4,371,349
69 4,371,350
88 4,371,351

CLASS 441

69 4,371,352
117 4,371,353

CLASS 455

77 4,371,978
180 4,371,979
208 4,371,980
219 4,371,981
327 4,371,982

CLASS 464

36 4,371,354
101 4,371,355
111 4,371,356
128 4,371,357
136 4,371,358
4,371,359
156 4,370,869

CLASS 474

111 4,371,360
198 4,371,362
201 4,371,361
205 4,371,363

CLASS 493

7 4,371,364
25 4,371,365
138 4,371,366
256 4,371,367
298 4,371,368
373 4,371,369

CLASS 501

145 4,371,626

CLASS 518

700 4,371,627
713 4,371,628

CLASS 521

115 4,371,629
173 4,371,630

CLASS 523

144 4,371,648
145 4,371,649
153 4,371,631
164 4,371,632
172 4,371,633
208 4,371,634
219 4,371,635
223 4,371,636
416 4,371,637
427 4,371,638
512 4,371,639

CLASS 524

66 4,371,640
70 4,371,641
88 4,371,642
4,371,643
102 4,371,644
108 4,371,645
119 4,371,646
120 4,371,647
162 4,371,650
178 4,371,651
216 4,371,652
268 4,371,653
296 4,371,654
423 4,371,655
443 4,371,656
512 4,371,657
585 4,371,658
599 4,371,659
601 4,371,660

CLASS 525

53 4,371,661
89 4,371,662
95 4,371,663
100 4,371,664
109 4,371,665
133 4,371,668
207 4,371,666
208 4,371,667
342 4,371,670
391 4,371,672
426 4,371,673
435 4,371,674
472 4,371,675

CLASS 526

76 4,371,676
80 4,371,677
83 4,371,678
116 4,371,679
159 4,371,680
295 4,371,681
311 4,371,669

CLASS 528

34 4,371,682
60 4,371,683
65 4,371,684
73 4,371,685
76 4,371,686
79 4,371,687
112 4,371,688
162 4,371,689
190 4,371,690
196 4,371,691
289 4,371,692
292 4,371,693
388 4,371,671

CLASS 544

300 4,371,734
4,371,735
316 4,371,736
370 4,371,737

CLASS 546

100 4,371,694
190 4,371,695
283 4,371,696

CLASS 548

125 4,371,697
177 4,371,698
201 4,371,699
262 4,371,700

CLASS 549

235 4,371,701
260 4,371,702
464 4,371,703
518 4,371,704

CLASS 562

444 4,371,705
553 4,371,706
582 Re.31,139

CLASS 568

6 4,371,707
31 4,371,708
33 4,371,709
35 4,371,710
310 4,371,711
430 4,371,712
614 4,371,713
628 4,371,714
659 4,371,715
678 4,371,716
681 4,371,717
697 4,371,718
723 4,371,719
731 4,371,720
750 4,371,721
828 4,371,722
861 4,371,723
902 4,371,724
907 4,371,725

CLASS 585

3 4,371,726
14 4,371,727
258 4,371,728
453 4,371,729
627 4,371,730
716 4,371,731
723 4,371,732
860 4,371,733

CLASS 604

98 4,370,982

CLASSIFICATION OF DESIGNS

Class	Subclass	Patent
D2—	241	267,752
D3—	40	267,753
	72	267,754
D4—	38.1	267,755
D6—	47	267,756
	56	267,757
	63	267,758
	66	267,759
	97	267,760
	99	267,761
	113	267,762
	234	267,763
	246	267,764
D7—	9	267,765
	38	267,766
		267,767
	76	267,768
	332	267,769
	346	267,770
	376	267,771
D8—	9	267,772
	57	267,773
	317	267,774
	380	267,775
	396	267,776
D9—	347	267,777
	424	267,778
	434	267,779
		267,780
	447	267,781
		267,782
	499	267,783
D10—	30	267,784
		267,785
	81	267,786
D11—	5	267,788
	81	267,789
	83	267,790
	137	267,791
D12—	110	267,792
	156	267,793
	337	267,794
D13—	10	267,795
	11	267,796
D14—	2	267,797
	11	267,798
	94	267,799
	114	267,787
D15—	13	267,800
D16—	30	267,801
	31	267,802
	32	267,803
		267,804
D18—	1	267,805
	14	267,806
D19—	12	267,829
	24	267,807
	78	267,808
	88	267,809
D20—	43	267,810
D21—	253	267,811
D23—	35	267,812
	55	267,813
D24—	46	267,814
	59	267,815
	68	267,816
D25—	63	267,817
D26—	35	267,818
	37	267,819
D27—	42	267,820
D28—	38	267,821
	86	267,822
D32—	14	267,823
	16	267,824
	41	267,825
	48	267,826
	51	267,827
D92—	32	267,828

CLASSIFICATION OF PLANTS

P.—	51	4,979

DEFENSIVE PUBLICATIONS APPLICATIONS

[Notice of Dec. 16, 1969, 869 O.G. 6877]

524—	562	T102,701

GEOGRAPHICAL INDEX OF RESIDENCE OF INVENTORS

(U.S. States, Territories and Armed Forces, the Commonwealth of Puerto Rico, and the Canal Zone)

Alabama	1	Kentucky	21	Oregon	41
Alaska	2	Louisiana	22	Pennsylvania	42
American Samoa	3	Maine	23	Puerto Rico	43
Arizona	4	Maryland	24	Rhode Island	44
Arkansas	5	Massachusetts	25	South Carolina	45
California	6	Michigan	26	South Dakota	46
Canal Zone	7	Minnesota	27	Tennessee	47
Colorado	8	Mississippi	28	Texas	48
Connecticut	9	Missouri	29	Utah	49
Delaware	10	Montana	30	Vermont	50
District of Columbia	11	Nebraska	31	Virginia	51
Florida	12	Nevada	32	Virgin Islands	52
Georgia	13	New Hampshire	33	Washington	53
Guam	14	New Jersey	34	West Virginia	54
Hawaii	15	New Mexico	35	Wisconsin	55
Idaho	16	New York	36	Wyoming	56
Illinois	17	North Carolina	37	U.S. Air Force	57
Indiana	18	North Dakota	38	U.S. Army	58
Iowa	19	Ohio	39	U.S. Navy	59
Kansas	20	Oklahoma	40		

(First number in listing denotes location according to above key. Refer to patent number in body of the Official Gazette to obtain details as to inventor name, location, etc.)

PATENTS

Location	Patent
01 :	4,371,325
	4,371,784
04 :	4,371,326
	4,371,328
	4,371,876
	4,371,927
	4,371,978
05 :	4,370,815
06 :	4,370,769
	4,370,771
	4,370,790
	4,370,791
	4,370,801
	4,370,808
	4,370,817
	4,370,818
	4,370,822
	4,370,858
	4,370,893
	4,370,899
	4,370,909
	4,370,971
	4,370,996
	4,371,003
	4,371,015
	4,371,022
	4,371,032
	4,371,052
	4,371,054
	4,371,097
	4,371,109
	4,371,111
	4,371,113
	4,371,128
	4,371,167
	4,371,169
	4,371,188
	4,371,225
	4,371,226
	4,371,236
	4,371,293
	4,371,304
	4,371,306
	4,371,337
	4,371,366
	4,371,394
	4,371,420
	4,371,431
	4,371,494
	4,371,515
	4,371,523
	4,371,540
	4,371,563
	4,371,587
	4,371,588
	4,371,593
	4,371,619
	4,371,705
	4,371,739
	4,371,751
	4,371,760
	4,371,774
	4,371,788
	4,371,790
	4,371,792
	4,371,815
	4,371,818
	4,371,820
	4,371,825
	4,371,830
	4,371,839
	4,371,842
	4,371,845
	4,371,846
	4,371,854
	4,371,870
	4,371,872
	4,371,873
	4,371,885
	4,371,899
	4,371,900
	4,371,903
	4,371,904
	4,371,905
	4,371,923
	4,371,925
	4,371,930
	4,371,931
	4,371,943
	4,371,945
	4,371,946
	4,371,948
	4,371,949
	4,371,950
	4,371,952
	4,371,953
	4,371,966
08 :	4,370,802
	4,371,335
	4,371,385
	4,371,424
	4,371,631
	4,371,901
09 :	4,370,792
	4,370,920
	4,370,955
	4,370,983
	4,371,091
	4,371,118
	4,371,139
	4,371,175
	4,371,180
	4,371,311
	4,371,404
	4,371,436
	4,371,549
	4,371,552
	4,371,570
	4,371,653
	4,371,696
	4,371,720
	4,371,781
	4,371,855
	4,371,936
	4,371,937
	4,371,938
	4,371,939
	4,371,941
10 :	4,371,391
	4,371,541
	4,371,605
	4,371,642
	4,371,687
	4,371,690
	4,371,692
	4,371,693
	4,371,702
	4,371,736
11 :	4,371,046
	4,371,882
12 :	4,370,836
	4,370,972
	4,371,067
	4,371,072
	4,371,164
	4,371,336
	4,371,422
	4,371,504
	4,371,722
	4,371,779
	4,371,786
	4,371,827
	4,371,912
	4,371,932
13 :	4,371,309
	4,371,371
	4,371,395
	4,371,449
16 :	4,370,970
17 :	4,370,806
	4,370,811
	4,370,868
	4,370,878
	4,370,953
	4,370,987
	4,370,992
	4,371,039
	4,371,040
	4,371,047
	4,371,090
	4,371,104
	4,371,110
	4,371,194
	4,371,195
	4,371,205
	4,371,206
	4,371,299
	4,371,315
	4,371,358
	4,371,410
	4,371,453
	4,371,501
	4,371,546
	4,371,557
	4,371,669
	4,371,701
	4,371,712
	4,371,747
	4,371,754
	4,371,758
	4,371,759
	4,371,762
	4,371,782
	4,371,789
	4,371,837
	4,371,880
	4,371,894
18 :	4,370,842
	4,370,933
	4,371,058
	4,371,088
	4,371,095
	4,371,369
	4,371,387
	4,371,633
	4,371,650
	4,371,749
	4,371,750
	4,371,802
	4,371,804
	4,371,862
	4,371,891
	4,371,896
	4,371,961
19 :	4,370,947
	4,371,063
	4,371,082
	4,371,148
	4,371,981
20 :	4,370,857
	4,370,870
	4,370,941
	4,371,580
21 :	4,370,935
	4,370,940
	4,371,152
	4,371,199
22 :	4,370,855
	4,370,882
	4,371,038
	4,371,044
	4,371,473
	4,371,512
23 :	4,371,383
24 :	4,370,773
	4,370,873
	4,370,974
	4,371,026
	4,371,161
	4,371,232
	4,371,310
	4,371,408
	4,371,462
	4,371,463
	4,371,496
	4,371,513
	4,371,611
	4,371,614
	4,371,632
	4,371,673
	4,371,746
	4,371,771
	4,371,809
	4,371,812
	4,371,851
	4,371,874
	4,371,883
25 :	4,370,782
	4,370,989
	4,371,075
	4,371,160
	4,371,248
	4,371,398
	4,371,421
	4,371,433
	4,371,500
	4,371,502
	4,371,519
	4,371,522
	4,371,555
	4,371,571
	4,371,603
	4,371,608
	4,371,623
	4,371,770
	4,371,785
	4,371,832
	4,371,921
	4,371,928
	4,371,965
26 :	4,370,794
	4,370,826
	4,370,843
	4,370,866
	4,370,867
	4,370,876
	4,370,918
	4,370,930
	4,370,976
	4,371,019
	4,371,071
	4,371,154
	4,371,203
	4,371,204
	4,371,214
	4,371,222
	4,371,247
	4,371,272
	4,371,351
	4,371,352
	4,371,359
	4,371,386
	4,371,537
	4,371,657
	4,371,663
	4,371,824
	4,371,971
27 :	4,370,890
	4,370,919
	4,371,085
	4,371,142
	4,371,171
	4,371,307
	4,371,349
	4,371,819
	4,371,861
	4,371,902
	4,371,951

	4,371,960
29 :	4,370,863
	4,371,099
	4,371,105
	4,371,138
	4,371,189
	4,371,303
	4,371,388
	4,371,389
	4,371,390
	4,371,497
	4,371,561
	4,371,717
30 :	4,370,796
31 :	4,370,757
	4,371,208
	4,371,314
32 :	4,370,906
	4,371,094
33 :	4,371,249
	4,371,355
	4,371,969
34 :	Re.31,136
	4,370,869
	4,370,881
	4,370,921
	4,371,010
	4,371,011
	4,371,080
	4,371,135
	4,371,224
	4,371,246
	4,371,259
	4,371,266
	4,371,273
	4,371,298
	4,371,374
	4,371,409
	4,371,451
	4,371,457
	4,371,468
	4,371,526
	4,371,543
	4,371,566
	4,371,616
	4,371,640
	4,371,643
	4,371,652
	4,371,660
	4,371,714
	4,371,721
	4,371,738
	4,371,755
	4,371,772
	4,371,783
	4,371,793
	4,371,803
	4,371,810
	4,371,863
	4,371,886
	4,371,887
	4,371,919
	4,371,959
35 :	4,371,045
	4,371,147
	4,371,598
36 :	Re.31,139
	4,370,756
	4,370,760
	4,370,763
	4,370,765
	4,370,766
	4,370,768
	4,370,789
	4,370,807
	4,370,824
	4,370,922
	4,370,969
	4,371,023
	4,371,137
	4,371,141
	4,371,153
	4,371,166
	4,371,191
	4,371,251
	4,371,253
	4,371,254
	4,371,279
	4,371,284
	4,371,378
	4,371,379
	4,371,384
	4,371,406
	4,371,493
	4,371,498
	4,371,528
	4,371,551
	4,371,556
	4,371,562
	4,371,565
	4,371,600
	4,371,601
	4,371,651
	4,371,707
	4,371,715
	4,371,740
	4,371,756
	4,371,761
	4,371,801
	4,371,843
	4,371,850
	4,371,860
	4,371,884
	4,371,890
	4,371,892
	4,371,897
	4,371,979
	4,371,980
37 :	4,370,784
	4,370,874
	4,370,973
	4,370,994
	4,371,016
	4,371,078
	4,371,079
	4,371,092
	4,371,375
	4,371,377
	4,371,584
	4,371,933
38 :	4,371,200
39 :	4,370,762
	4,370,828
	4,370,838
	4,370,854
	4,370,891
	4,370,897
	4,370,901
	4,370,959
	4,370,984
	4,370,995
	4,371,021
	4,371,077
	4,371,086
	4,371,096
	4,371,129
	4,371,162
	4,371,163
	4,371,190
	4,371,201
	4,371,202
	4,371,211
	4,371,213
	4,371,229
	4,371,235
	4,371,318
	4,371,338
	4,371,447
	4,371,461
	4,371,483
	4,371,488
	4,371,583
	4,371,596
	4,371,648
	4,371,655
	4,371,677
	4,371,733
	4,371,737
	4,371,743
	4,371,833
	4,371,942
40 :	4,371,027
	4,371,124
	4,371,136
	4,371,295
	4,371,427
	4,371,443
	4,371,455
	4,371,458
	4,371,481
	4,371,499
	4,371,507
	4,371,511
	4,371,635
	4,371,671
	4,371,706
	4,371,718
	4,371,728
	4,371,730
	4,371,731
	4,371,732
	4,371,944
41 :	4,370,905
	4,371,476
	4,371,856
	4,371,865
42 :	4,370,795
	4,370,803
	4,370,813
	4,370,840
	4,370,848
	4,370,861
	4,370,892
	4,370,975
	4,370,980
	4,370,982
	4,371,093
	4,371,106
	4,371,144
	4,371,210
	4,371,305
	4,371,344
	4,371,354
	4,371,376
	4,371,393
	4,371,428
	4,371,459
	4,371,465
	4,371,466
	4,371,469
	4,371,482
	4,371,495
	4,371,539
	4,371,558
	4,371,560
	4,371,585
	4,371,591
	4,371,661
	4,371,666
	4,371,670
	4,371,672
	4,371,697
	4,371,799
	4,371,829
	4,371,913
	4,371,914
	4,371,915
43 :	4,370,767
	4,371,170
	4,371,285
44 :	4,370,907
	4,371,439
45 :	4,371,084
	4,371,130
	4,371,330
	4,371,576
	4,371,579
	4,371,589
	4,371,645
	4,371,688
	4,371,776
	4,371,963
46 :	4,371,626
47 :	4,370,755
	4,371,070
	4,371,362
	4,371,764
48 :	4,370,754
	4,370,798
	4,370,805
	4,370,814
	4,370,823
	4,370,862
	4,370,886
	4,370,931
	4,370,977
	4,371,005
	4,371,074
	4,371,157
	4,371,165
	4,371,198
	4,371,276
	4,371,291
	4,371,302
	4,371,316
	4,371,426
	4,371,444
	4,371,450
	4,371,474
	4,371,629
	4,371,639
	4,371,680
	4,371,704
	4,371,716
	4,371,723
	4,371,724
	4,371,742
	4,371,752
	4,371,847
	4,371,866
	4,371,924
	4,371,958
	4,371,974
	4,371,975
	4,371,982
49 :	4,371,055
51 :	4,370,783
	4,370,819
	4,370,908
	4,370,936
	4,370,948
	4,370,978
	4,371,013
	4,371,301
	4,371,322
	4,371,658
	4,371,753
	4,371,838
	4,371,929
	4,371,968
53 :	4,370,758
	4,370,831
	4,370,911
	4,371,001
	4,371,116
	4,371,181
54 :	4,370,759
	4,371,977
55 :	Re.31,135
	Re.31,137
	4,370,786
	4,370,829
	4,370,979
	4,371,048
	4,371,348
	4,371,417
	4,371,430
	4,371,553
	4,371,814

DESIGN PATENTS

01 :	267,800
06 :	267,756
	267,757
	267,758
	267,759
	267,783
	267,786
	267,790
	267,798
	267,809
	267,818
	267,819
08 :	267,815
09 :	267,779
13 :	267,768
16 :	267,829
17 :	267,753
	267,774
	267,777
	267,780
	267,789
	267,806
	267,821
	267,827
18 :	267,791
	267,811
19 :	267,772
24 :	267,796
	267,807
25 :	267,828
26 :	267,793
	267,816
27 :	267,824
34 :	267,781
	267,782
	267,822
36 :	267,762
	267,801
	267,803
	267,804
	267,808
	267,814
	267,826
39 :	267,823
40 :	267,754
	267,769
42 :	267,765
	267,825
47 :	267,766
	267,767
48 :	267,763
	267,775
51 :	267,795
	267,817
55 :	267,813

PLANT PATENTS

17 :	4,979

DEFENSIVE PUBLICATIONS APPLICATIONS

[Notice of Dec. 16, 1969, 869 O.G. 6877]

08 :	T102,701

U.S. GOVERNMENT PRINTING OFFICE : O—1983

CHANGE OF ADDRESS FORM

NAME—FIRST, LAST

COMPANY NAME OR ADDITIONAL ADDRESS LINE

STREET ADDRESS

CITY | STATE | ZIP CODE

PLEASE PRINT OR TYPE

(or) COUNTRY

Mail this form to: NEW ADDRESS

Superintendent of Documents
Government Printing Office SSOM
Washington, D.C. 20402

Attach last subscription label here.

SUBSCRIPTION ORDER FORM

SUBSCRIPTION ORDER FORM

ENTER MY SUBSCRIPTION TO:

@ $ Domestic; @ $ Foreign.

NAME—FIRST, LAST

COMPANY NAME OR ADDITIONAL ADDRESS LINE

STREET ADDRESS

CITY | STATE | ZIP CODE

PLEASE PRINT OR TYPE

(or) COUNTRY

☐ Remittance Enclosed (Make checks payable to Superintendent of Documents)

☐ Charge to my Deposit Account No. ....

MAIL ORDER FORM TO:
Superintendent of Documents
Government Printing Office
Washington, D.C. 20402

OFFICIAL GAZETTE

of the

UNITED STATES PATENT AND TRADEMARK OFFICE

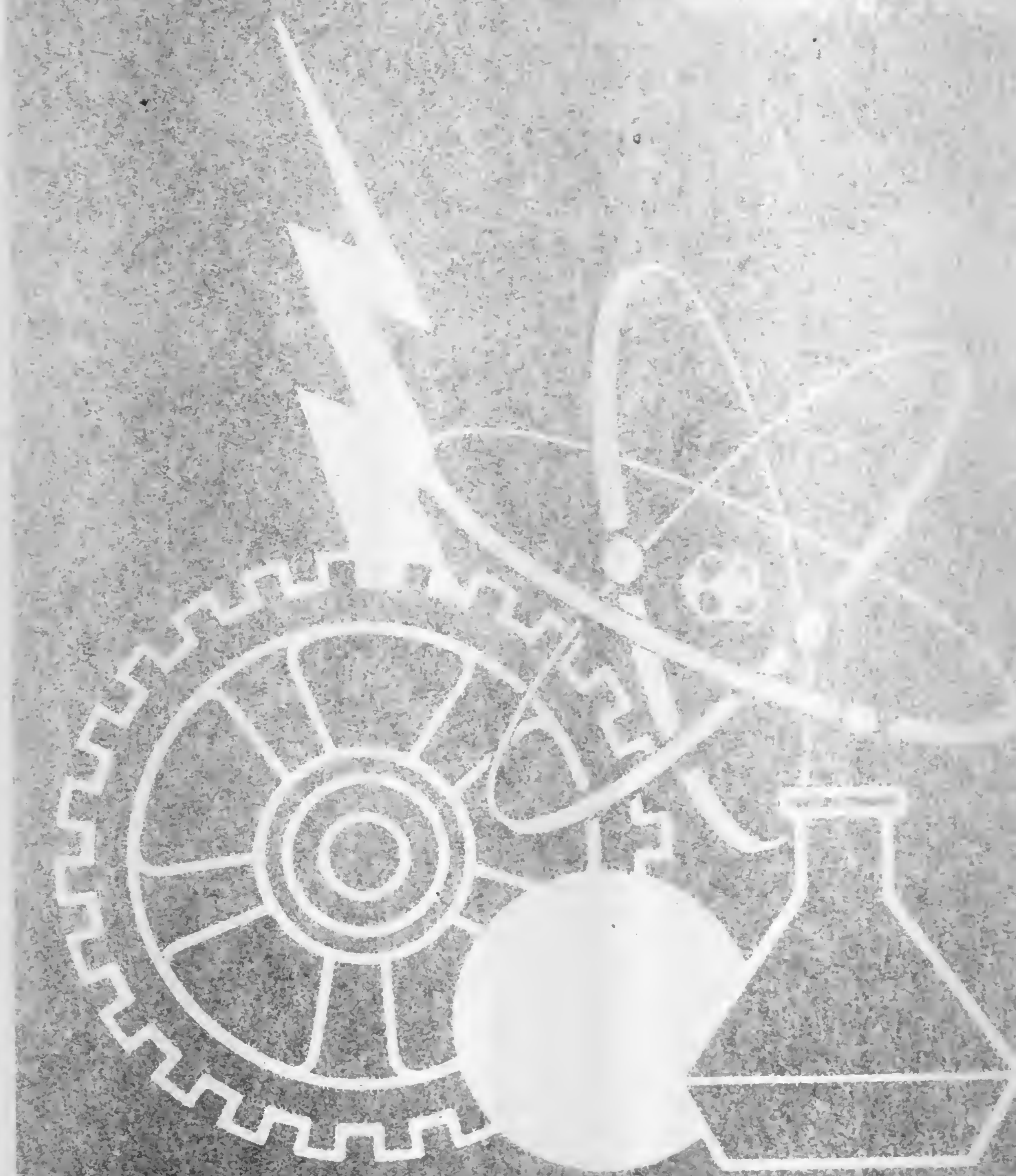

U.S.
DEPARTMENT
OF COMMERCE

Patent
and
Trademark
Office

PUBLISHED WEEKLY BY AUTHORITY OF CONGRESS

OFFICIAL GAZETTE of the UNITED STATES PATENT AND TRADEMARK OFFICE

February 8, 1983 Volume 1027 Number 2

CONTENTS

The following are mailed under direction of the Superintendent of Documents, Government Printing Office, Washington, D.C., 20402, to whom all subscriptions should be made payable and all communications addressed:

THE OFFICIAL GAZETTE (PATENT SECTION), issued weekly.

THE OFFICIAL GAZETTE (TRADEMARK SECTION), issued weekly.

GENERAL INFORMATION concerning PATENTS.

GENERAL INFORMATION concerning TRADEMARKS.

PRINTED COPIES OF PATENTS are furnished by the Patent and Trademark Office at $1.00 each; PLANT PATENTS in color, $8.00 each; copies of TRADEMARKS at $1.00 each. Address orders to the Commissioner of Patents and Trademarks, Washington, D.C., 20231.

Printing authorized by Section 11(a)3 of Title 35, U.S. Code P.T.O.

PATENT AND TRADEMARK OFFICE NOTICES

Patent Cooperation Treaty Information

For information concerning the PCT member countries see the notice appearing in the Official Gazette at 1017 O.G. 10 on Apr. 13, 1982. For use of the European Patent Office as a Searching Authority for PCT applications filed in the United States, see the notice in the Official Gazette of Sept. 28, 1982 at 1022 O.G. 52.

Note that the domestic PCT fees have been increased as of Oct. 1, 1982 by a rule change to 37 CFR 1.445 that was published at 1021 O.G. 11 on Aug. 10, 1982. Also note that the international PCT fees have changed as of Jan. 1, 1983 and the Search Fee for the European Patent Office as Searching Authority changed as of Jan. 22, 1983. The notice regarding the change in international fees and the Search Fee for the European Patent Office appeared at 1025 O.G. 27, on 28 Dec. 1982. The current schedule of fees is as follows:

Transmittal fee	$ 125.00
Search fee	
U.S. Patent and Trademark Office as Searching Authority	
· No corresponding prior U.S. national application filed	500.00
· Corresponding prior U.S. national application filed	250.00
European Patent Office as Searching Authority	
· All cases	670.00
International Fees	
Basic Fees (first 30 pages)	265.00
Basic Supplemental Fee (for each page over 30)	5.00
Designation fee (for each national or regional office)	65.00

Dec. 3, 1982.

GERALD J. MOSSINGHOFF,
Commissioner of Patents and Trademarks.

REISSUE APPLICATIONS FILED

Notice under 37 CFR 1.11(b). The reissue applications listed below are open to inspection by the general public in the indicated Examining Groups and copies may be obtained by paying the fee therefor (37 CFR 1.21(b)).

3,999,193, Re. S.N. 401,536, Filed July 26, 1982, Cl. 354/33, AUTOMATIC CONTROL INDICATION DEVICE IN AN AUTOMATIC CONTROL TYPE ELECTRONIC FLASH UNIT, Hiroshi Hasegawa, Owner of Record: *Nippon Kogaku K.K., Tokyo, Japan,* Attorney or Agent: John M. Fitzpatrick, et al., Ex. Gp.: 211

4,230,047, Re. S.N. 436,926, Filed Oct. 26, 1982, Cl. 105/197D, RAILWAY TRUCK BOLSTER FRICTION ASSEMBLY, Donald Wiebe, Owner of Record: *A. Stucki Co., Pittsburgh, Pa.,* Attorney or Agent: E. Wallace Breisch, et al., Ex. Gp.: 312

4,230,372, Re. S.N. 437,297, Filed Oct. 28, 1982, Cl. 299/39, DUAL ROCK CUTTER WHEEL TRENCHER, Edward N. Marten, Owner of Record: *Inventor,* Attorney or Agent: E. Mickey Hubbard, et al., Ex. Gp.: 356

4,276,557, Re. S.N. 429,299, Filed Sept. 30, 1982, Cl. 427/85, METHOD FOR MAKING INTEGRATED SEMICONDUCTOR CIRCUIT STRUCTURE WITH FORMATION OF TI OR TA SILICIDE, Hyman J. Levinstein, et al., Owner of Record: *Bell Telephone Laboratories, Inc., Murray Hill, N.J.,* Attorney or Agent: S. E. Hollander, et al., Ex. Gp.: 162

4,306,128, Re. S.N. 437,144, Filed Oct. 27, 1982, Cl. 200/144B, VACUUM CIRCUIT INTERRUPTER, Yoshiyuki Innami, et al., Owner of Record: *Kabushiki Kaisha Meidensha, Tokyo, Japan,* Attorney or Agent: Allan M. Lowe, et al., Ex. Gp.: 215

4,318,162, Re. S.N. 438,682, Filed Nov. 3, 1982, Cl. 362/226, SNAP IN COUPLING ASSEMBLY FOR A VEHICLE HEADLAMP, Jiri G. Sip, Owner of Record: *General Electric, New York, N.Y.,* Attorney or Agent: Norman C. Fulmer, et al., Ex. Gp.: 221

4,318,323, Re. S.N. 394,606, Filed July 2, 1982, Cl. 83/168, SLAVE BLADE SCRAPERS FOR A BAND SAW, John E. Voorhees, et al., Owner of Record: *Hobart Corp., Troy, Ohio,* Attorney or Agent: Nathaniel R. French, et al., Ex. Gp.: 324

4,323,127, Re. S.N. 438,406, Filed Nov. 1, 1982, Cl. 173/53, ELECTRICALLY OPERATED IMPACT TOOL, James D. Cunningham, Owner of Record: *Inventor,* Attorney or Agent: Ernest A. Wagnen, et al., Ex. Gp.: 323

4,324,929, Re. S.N. 430,553, Filed Sept. 30, 1982, Cl. 568/54, PROCESS FOR THE PREPARATION OF ORTHO-(HYDROCARBYLTHIO)-PHENOLS, Bonnie G. McKinnie, et al., Owner of Record: *Ethyl Corp., Richmond, Va.,* Attorney or Agent: Donald L. Johnson, et al., Ex. Gp.: 122

4,332,839, Re. S.N. 429,299, Filed Sept. 30, 1982, Cl. 427/85, METHOD FOR MAKING INTEGRATED SEMICONDUCTOR CIRCUIT STRUCTURE WITH FORMATION OF TI OR TA SILICIDE, Hyman J. Levinstein, et al., Owner of Record: *Bell Telephone Laboratories, Inc., Murray Hill, N.J.,* Attorney or Agent: S. E. Hollander, et al., Ex. Gp.: 162

REQUESTS FOR REEXAMINATION FILED

Notice under 37 CFR 1.11(c). The requests for reexamination listed below are open to inspection by the general public in the indicated Examining Groups. Copies of the requests and related papers may be obtained by paying the fee therefor established in the Rules (37 CFR 1.21(b)).

In the event correspondence to the patent owner is not received, this notice will be considered to be constructive notice to the patent owner and reexamination will proceed (37 CFR 1.248(a)(5) and 1.525(b)).

3,319,029, Reexam. No. 90/000,303, Requested: Dec. 3, 1982, Cl. 337/276, HIGH-VOLTAGE FUSES HAVING ZIG-ZAG-SHAPED FUSE LINK, Philip C. Jacobs, Jr., Owner of Record: *Gould, Inc., Rolling Meadows, Ill,* Attorney or Agent: Frederick A. Goettel, Jr., Ex. Gp.: 212 Requester: Charles W. Mackinnon, Rolling Meadows, Ill.

3,634,228, Reexam. No. 90/000,307, Requested: Dec. 14, 1982, Cl. 210/636, STERILE WASHING METHOD AND APPARATUS, Allen Latham, Jr., Owner of Record: *Requester,* Attorney or Agent: Hamilton, Brook, et al., Ex. Gp.: 176, Requester: Haemonetics Corp., Braintree, Mass.

4,059,405, Reexam. No. 90/000,312, Requested: Jan. 12, 1983, Cl. 436/44, METHOD AND APPARATUS FOR ANALYSIS OF CONSTITUENT CARRIED IN FIBROUS MEDIUM, Lester A. Sodickson, et al., Owner of Record: *Damon Corp., Needham Height, Mass.,* Attorney or Agent: Kenway & Jenney, Ex. Gp.: 173, Requester: American Hospital Supply Corp., Miami, Fla.

National Inventors Day

The Patent and Trademark Office and the National Council of Patent Law Associations will sponsor National Inventors Day in the Public Search Room on Saturday, Feb. 12, 1983, from 1:00 p.m. to 5:00 p.m. and Sunday, Feb. 13, 1983, from 10:00 a.m. to 5:00 p.m. The public is invited to view the exhibits on these days.

In order to assemble the exhibits it will be necessary to close the Search Room on Friday, Feb. 11, 1983, at 5:00 p.m. The removal of all personal property from the Search Room by the early closing time would be appreciated.

Nov. 12, 1982.

GERALD J. MOSSINGHOFF,
Commissioner of Patents and Trademarks.

Effect on Small Entity Status of License Pursuant to 35 USC 202(c) (4)

Public Law 96-517 added a new chapter 38 to Title 35 of the United States Code entitled "Patent Rights in Inventions Made With Federal Assistance." Under the provisions of the statute, each funding agreement between a Federal agency and an individual, small business firm or nonprofit organization must provide, inter alia, that ". . . the Federal agency shall have a nonexclusive, nontransferable, irrevocable, paid up license to practice or have practiced for or on behalf of the United States any subject invention . . ." See 35 U.S.C. 202(c) (4).

Under provisions of 37 CFR 1.9 and 1.27, an independent inventor, small business concern or nonprofit organization cannot qualify for reduced patent fees if it has assigned, granted, conveyed or licensed or is under an obligation under contract or law to assign, grant, convey or license any rights in the invention to other than an individual who could be classified as an independent inventor if that person had made the invention, a small business concern or a nonprofit organization. The Federal agencies do not qualify as nonprofit organizations for paying reduced patent fees under the rules. Applying this construction to the licensing of an invention to a Federal agency by an independent inventor, small business concern or nonprofit organization pursuant to a funding agreement under 35 U.S.C. 202(c) (4) would preclude their qualifying for paying reduced fees. This, however, would frustrate the intent of Public Law 97-247 and Public Law 96-517 when taken together.

This notice will serve as clarification that an independent inventor, small business concern or nonprofit organization, which is otherwise qualified as a small entity for purposes of paying reduced patent fees under 37 CFR 1.9 and 1.27, is not disqualified therefrom because of a license to a Federal agency pursuant to 35 U.S.C. 202(c) (4). A license to a Federal agency resulting from a funding agreement with that agency pursuant to 35 U.S.C. 202(c) (4) does not constitute a license for purposes of 37 CFR 1.9 or a transfer of rights for purposes of 37 CFR 1.27. Any other license or rights to a Federal agency will, of course, preclude qualification as a small entity for purposes of paying reduced fees.

Applicants who have previously paid fees which were not reduced for small entity status because of a license to a Federal agency pursuant to 35 U.S.C. 202(c) (4) may claim a refund by filing the proper verified statement as required by 37 CFR 1.27 and by making reference to this notice.

Jan. 14, 1983.

GERALD J. MOSSINGHOFF,
Commissioner of Patents and Trademarks.

Procedure for Handling Amendments under 37 CFR 1.116

On Oct. 1, 1982, pursuant to Public Law 97-247, the Patent and Trademark Office discontinued the previous practice in patent applications of extending without fee the shortened statutory period for response to a final rejection upon the filing of a timely first response to a final rejection (37 CFR 1.116). Since Oct. 1, 1982, applicants are able to obtain additional time for a first or subsequent response to a final rejection by petitioning and paying the appropriate fee under 37 CFR 1.136(a), provided the additional time does not exceed the six month statutory period.

In order to continue to encourage the early filing of any first response after a final rejection and to take care of any situations in which the examiner does not timely respond to a first response after final rejection which is filed early in the period for response, the Office is changing the manner in which the period for response is set on any final rejection mailed after Feb. 27, 1983.

Under the changed procedure, if an applicant initially responds within two months from the date of mailing of any final rejection setting a three-month shortened statutory period for response and the Office does not mail an advisory action until after the end of the three-month shortened statutory period, the period for response for purposes of determining the amount of any extension fee will be the date on which the Office mails the advisory action advising applicant of the status of the application, but in no event can the period extend beyond six months from the date of the final rejection. This procedure will apply only to a first response to a final rejection and will be implemented by including the following language in each final rejection mailed after Feb. 27, 1983:

> A shortened statutory period for response to this final action is set to expire three months from the date of this action. In the event a first response is filed within two months of the mailing date of this final action and the advisory action is not mailed until after the end of the three-month shortened statutory period, then the shortened statutory period will expire on the date the advisory action is mailed, and any extension fee pursuant to 37 CFR 1.136(a) will be calculated from the mailing date of the advisory action. In no event will the statutory period for response expire later than six months from the date of this final action.

For example, if applicant initially responds within two months from the date of mailing of a final rejection and the examiner mails an advisory action before the end of three months from the date of mailing of the final rejection, the shortened statutory period will expire at the end of three months from the date of mailing of the final rejection. In such a case, any extension fee would then be calculated from the end of the three-month period. If the examiner, however, does not mail an advisory action until after the end of three months, the shortened statutory period will expire on the date the examiner mails the advisory action and any extension fee may be calculated from that date.

Statutory periods set in Office actions mailed before Feb. 28, 1983, will not be effected by this change in procedure.

Jan. 14, 1983.

GERALD J. MOSSINGHOFF,
Commissioner of Patents and Trademarks.

Registration to Practice

The following list contains the names of persons applying for registration to practice before the United States Patent and Trademark Office. Information tending to affect the eligibility of said applicants on moral, ethical, or other grounds, should be furnished the Commissioner of Patents and Trademarks on or before Mar. 11, 1983.

Armstrong, R. Craig, P.O. Box 790, Waterloo, Ontario, Canada N2J 4C2
Flint, J. Howard, Jr., 1114 Dead Run Dr., McLean, Va. 22101
Griffen, Susan H., 4840 Bradley Blvd., Chevy Chase, Md. 20815
Koris, David J., 52 Gray Rd., Andover, Mass. 01810

DONALD J. QUIGG,
Chairman, Committee on Enrollment.

Jan. 11, 1983.

National Technical Information Service

U.S. GOVERNMENT-OWNED INVENTIONS

Notice of Availability for Licensing

The inventions listed below are owned by agencies of the U.S. Government and are available for licensing in the U.S. in accordance with 35 U.S.C. 207 to achieve expeditious commercialization of results of federally funded research and development. Foreign patents are filed on selected inventions to extend market coverage for U.S. companies and may also be available for licensing.

Technical and licensing information on specific inventions may be obtained by writing to:

Office of Government Inventions and Patents
U.S. Department of Commerce
P.O. Box 1423
Springfield, Va. 22151

Please cite the number and title of inventions of interest.

DOUGLAS J. CAMPION,
Program Coordinator,
Office of Government Inventions and Patents
National Technical Information Service
U.S. Department of Commerce.

SN 6–279,443. LTR-VECTORS. Dept. of Health & Human Services.

SN 6–360,424. HUMAN USE FOR THE COMPOUND 4-CARBOXYPHTHALATO (1,2-DIAMINOCYCLOHEXANE)-PLATINUM (II) AND ALKALI METAL SALTS THEREOF. Dept. of Health & Human Services.

SN 6–417,625. METHOD OF INHIBITION OF NEURAL DECLINE WITH AGING BY RETARDATION OR COUNTER-ACTION. Dept. of Health & Human Services.

SN 6–330,959. MONOCLONAL ANTIBODIES REACTIVE WITH HUMAN BREAST CANCER. Dept. of Health & Human Services.

SN 6–335,155. 1,4-BIS (2'-CHLOROETHYL)-1,4-DIAZABICYCLO (2.2.1)-HEPTANE SALTS AND METHOD OF PREPARATION THEREOF. Dept. of Health & Human Services.

SN 6–367,470. ANTILEUKEMIC 1,4-BIS(2'-CHLOROETHYL)-1,4-DIAZABICYCLO (2.2.1)-HEPTANE SALTS AND METHOD OF PREPARATION THEREOF. Dept. of Health & Human Services.

SN 6–423,241. INOSINE-5'-MONOPHOSPHATE (IMP) DEHYDROGENASE INHIBITORS. Dept. of Health & Human Services.

SN 6–443,682. MONOCLONAL ANTIBODIES TO HERPES SIMPLEX VIRUS TYPE I POLYPEPTIDES. Dept. of Health & Human Services.

SN 6–389,118. POLYMER BOUND DYES PREPARED BY DIAZO COUPLING REACTIONS WITH POLY (ORGANOPHOSPHAZENES). Dept. of Health & Human Services.

SN 6–352,599. ANTIVIRAL ACTIVITIES OF DANSYLCADAVERINE AND CLOSELY RELATED COMPOUNDS. Dept. of Health & Human Services.

SN 6–426,440. DETECTION OF AGRICULTURAL CONTRABAND IN BAGGAGE. Dept. of Agriculture.

SN 6–408,569. SYNTHETIC PHEROMONE 8-METHYL-2-DECONOL PROPANOATE AND ITS USE IN CONTROLLING CORN ROOTWORMS. Dept. of Agriculture.

SN 6–423,404. TREATMENT OF RICE FLOUR TO OBTAIN IMPROVED QUALITY BAKED PRODUCTS. Dept. of Agriculture.

SN 6–340,919. HEAT ABSORBING JACKET FOR HIGH INTENSITY LAMPS. Dept. of Agriculture.

Patents Available for License or Sale

3,961,386. TOILET SEAT COVER. *Ferdinand Beno,* 820 S. Park Ter., Suite 204, Chicago, Ill. 60605.

4,136,764. MOTHER ALICE'S BREAD VENDING MACHINE. *Alice Johnson,* 8650 Belford Ave. #1, Los Angeles, Calif. 90045.

4,278,163. WALL MOUNTED LOG CHUTE. *Wayne K. Tomich Kasper T. Co.,* 6475 Walsh Rd., Gagetown, Mich. 48735.

4,300,884. CASTING COLLAR FOR DENTAL IMPRESSION TRAY. *Hector Camacho,* 99-72 66 Rd. Forest Hills N.Y. 11374.

4,340,122. MOUNTED DRILLING APPARATUS. *Salzgitter, Maschinen und Anlagen Aktiengesellschaft Salzgitter,* Federal Republic of Germany. Correspondence to: Michael J. Striker, 360 Lexington Ave. New York, N.Y. 10017.

4,342,384. MEDAL RUMINANT SLOT MACHINE GAMES. *Sayama Precision Industrial Co., Ltd.,* Sayama, Japan. Please direct all correspondence to: Holman & Stern, 2401 Fifteenth St., N.W., Washington, D.C. 20009.

4,345,238. SIGNALLING DEVICE FOR USE IN AUTOMOTIVE AND LIKE VEHICLES. *Richard L. Weir,* 2217 Grant Ave., Dayton, Ohio 45406.

Kimball International, Inc. offers to grant non-exclusive licenses on reasonable terms and conditions under the patents listed below. Inquiries respecting licenses under these patents should be addressed to H.E. Thyen, Kimball International, Inc., 1549 Royal St., Jasper, Ind. 47546.

3,255,294. PERCUSSION CIRCUIT FOR ELECTRONIC MUSICAL INSTRUMENT.
3,263,018. DIODE DISCONNECT CIRCUIT, FOR ELECTRONIC MUSICAL INSTRUMENTS, ISOLATING VARIABLE LOAD MEANS FROM TONE GENERATOR MEANS.
3,286,013. ELECTRONIC VIBRATO DEVICE WITH PLURAL MANUALS.
3,297,812. GATED FUNCTION SWITCHES IN ELECTRIC ORGAN.
3,309,454. ELECTRICAL MUSICAL INSTRUMENT AUTOMATICALLY PRODUCING SELECTED RHYTHMS.
3,310,622. KEY SWITCHING FOR ELECTRIC ORGAN.
3,430,530. MUSIC SYSTEM.
3,342,967. PUSHBUTTON SWITCH.
3,359,358. CHORD ORGAN SWITCHING CIRCUIT FOR SELECTIVELY PLAYING EITHER CHORDS OR SINGLE NOTES BY DEPRESSING ONE KEY.

3,415,941. ORGAN CIRCUIT.
3,422,454. ELECTRICAL MUSICAL INSTRUMENTS.
3,439,569. ELECTRICAL MUSICAL INSTRUMENT.
3,466,090. TAB INTERLOCK.
3,446,904. KEY SYSTEM FOR ELECTRICAL MUSICAL INSTRUMENT.
3,465,087. ELECTRIC ORGAN CIRCUIT.
3,472,114. COMBINATION TAB SELECTOR.
3,509,263. ELECTRONIC MUSICAL INSTRUMENT KEYING SYSTEM INCLUDING ATTACK AND DECAY CONTROL.
3,509,373. PEAK LIMITER.
3,510,565. ELECTRONIC ORGAN WITH MUSICAL NOTES COMPRISING BEAT FREQUENCIES OF A REFERENCE GENERATOR AND NOTE GENERATORS UTILIZING MAGNETOSTRICTIVE OSCILLATORS.
3,514,723. TONE CONTROL CIRCUIT COMPRISING A SINGLE POTENTIOMETER.
3,515,791. PIANO KEYING CIRCUIT FOR ELECTRICAL MUSICAL INSTRUMENT, WITH SELECTIVE BY-PASS CIRCUITS FOR OTHER INSTRUMENTAL EFFECTS.
3,518,352. RHYTHM GENERATING CIRCUIT FOR MUSICAL INSTRUMENT.
3,519,722. VARIABLE IMPEDANCE MEMBER FOR ELECTRONIC MUSICAL INSTRUMENT.
3,525,951. ELECTRICAL ORGAN CIRCUIT.
3,543,191. CONTROLLABLE FILTER NETWORK.
3,543,281. ELECTRONIC MUSICAL INSTRUMENT DUAL PURPOSE GATE AND KEYING CIRCUIT.
3,560,628. MULTI-CHANNEL KEY SWITCH CIRCUIT.
3,560,629. MANUALLY-CONTROLLED CIRCUIT.
3,593,187. NOISE GENERATOR AND ACTUATING CIRCUIT FOR MUSICAL INSTRUMENTS.
3,665,088. KEYER CIRCUIT FOR AN ELECTRONIC MUSICAL INSTRUMENT WHEREIN A SINGLE SWITCH MAY ACTUATE A SINGLE NOTE OR A CHORD.
3,693,052. ELECTRICAL COMPONENT MOUNTING.
3,710,480. TERMINAL PIN INSTALLING MACHINE.
4,315,452. PERCUSSIVE MODULATOR FOR ELECTRONIC ORGAN.
3,778,525. ELECTRONIC MUSICAL INSTRUMENT WITH PHASE SHIFT TREMULANT SYSTEM.
3,844,192. CHORD CONTROL SYSTEM FOR ELECTRONIC ORGAN.
3,935,784. DOUBLE TOUCH KEY FOR MUSICAL INSTRUMENTS.
3,941,024. ELECTRICAL MUSICAL INSTRUMENT WITH AUTOMATIC SEQUENTIAL TONE GENERATION.
3,948,139. ELECTRONIC SYNTHESIZER WITH VARIABLE/PRESET VOICE CONTROL.
3,954,038. ELECTRICAL MUSICAL INSTRUMENT WITH AUTOMATIC SEQUENTIAL TONE GENERATION.
3,960,043. FILTER CIRCUIT.
4,019,417. ELECTRICAL MUSICAL INSTRUMENT WITH CHORD GENERATION.
4,031,786. TONE SELECTOR CIRCUIT WITH MULTIPLEXED TONE DATA TRANSFER.
4,046,047. NOTE SELECTOR CIRCUIT FOR ELECTRONIC MUSICAL INSTRUMENT.
4,059,039. ELECTRICAL MUSICAL INSTRUMENT WITH CHORD GENERATION.
4,080,861. CHORUS CONTROL FOR ELECTRONIC MUSICAL INSTRUMENT.
4,106,385. DIGITAL ARPEGGIO GENERATING DEVICE.
4,173,166. TAB SWITCH MECHANISM FOR MUSICAL INSTRUMENTS.
4,186,636. DIGITAL CHORD GENERATION FOR ELECTRONIC MUSICAL INSTRUMENTS.
4,188,848. DIGITAL TONE AND CHORD GENERATORS.
4,248,121. PULSE GENERATOR FOR PRODUCING THE HARMONIC EQUIVALENT OF A SAWTOOTH WAVE.
4,311,076. ELECTRONIC MUSICAL INSTRUMENT WITH HARMONY GENERATION.
4,315,452. PERCUSSIVE MODULATOR FOR ELECTRONIC ORGAN.
3,410,947. SOUND REPRODUCING SYSTEM.
3,424,850. ACOUSTIC SYSTEM
3,433,880. PERCUSSION SYSTEM.
3,470,785. TEACHING AID FOR ELECTRIC KEYBOARD INSTRUMENT.
3,617,605. PERCUSSION KEYER CIRCUIT.
3,740,449. ELECTRIC ORGAN WITH CHORD PLAYING AND RHYTHM SYSTEMS.
Re. 28,999. AUTOMATIC RHYTHM SYSTEM PROVIDING DRUM BREAK.
3,837,254. ORGAN PEDAL TONE GENERATOR.
3,954,039. CHORD SELECTION SYSTEM FOR A MUSICAL INSTRUMENT.
3,955,460. ELECTRONIC MUSICAL INSTRUMENT EMPLOYING DIGITAL MULTIPLEXED SIGNALS.
3,977,291. ATTENUATOR NETWORK FOR MUSICAL INSTRUMENT KEYING SYSTEM.
4,012,982. PERCUSSION PROCESSOR FOR ELECTRONIC MUSICAL INSTRUMENT.
4,014,238. TONE SIGNAL WAVEFORM CONTROL NETWORK FOR MUSICAL INSTRUMENT KEYING SYSTEM.
4,072,078. SYSTEM FOR AUTOMATICALLY PRODUCING TONE PATTERNS.
4,150,599. DIGITAL KEYING SYSTEM FOR AN ELECTRONIC MUSICAL INSTRUMENT.
4,202,239. TONE GENERATOR KEYER CONTROL SYSTEM.
3,477,330. LAMINATED SOUNDBOARD FOR A STRING INSTRUMENT.
4,216,691. OCTAVE ASSIGNMENT FOR ELECTRONIC MUSICAL INSTRUMENT.

4,270,431. GLIDE CIRCUIT FOR ELECTRONIC MUSICAL INSTRUMENT.
4,262,575. QUASI-RANDOM PHASE SHIFT FOR AN ELECTRONIC MUSICAL INSTRUMENT.
3,327,047. COMBINATION OF SELECTOR SWITCH AND KNEE CONTROL.
3,389,211. ELECTRONIC KEYER.
3,524,009. PERCUSSION RIBBON DEVICE FOR KEYBOARD MUSICAL INSTRUMENT.
3,681,507. ELECTRONIC ORGAN VOICING CONTROL MOUNTED ON VOICE TAB.
3,717,065. KEY INDICATING DEVICE.
3,871,262. ELECTRONIC ORGAN HAVING DELAYED FILL IN.
3,990,339. ELECTRIC ORGAN AND METHOD OF OPERATION.
4,073,209. METHOD AND CIRCUITRY FOR DIGITAL-ANALOG FREQUENCY GENERATION.
4,112,802. ORGAN CIRCUITRY FOR PROVIDING FILL NOTES AND A METHOD OF OPERATING THE ORGAN.
4,129,055. ELECTRONIC ORGAN WITH CHORD AND TAB SWITCH SETTING, PROGRAMMING AND PLAYBACK.
4,147,085. ELECTRONIC ORGAN HAVING MEMORY CIRCUIT.
4,152,965. ORGAN CIRCUIT AND METHOD OF OPERATION.
4,191,083. METHOD AND APPARATUS FOR MEMORIZING AN ACCOMPANIMENT PASSAGE.
4,202,236. CHORD PATTERN GENERATOR.
4,210,054. HIGH NOTE PRIORITY MONOPHONIC BRASS KEYER SYSTEM.
4,220,068. METHOD AND APPARATUS FOR RHYTHMIC NOTE PATTERN GENERATION IN ELECTRONIC ORGAN.
4,228,714. MULTIPLEX CHIME GENERATOR.
4,236,436. ELECTRONIC MUSIC SYNTHESIZER.
4,299,154. ELECTRONIC RHYTHM GENERATOR.
4,300,436. BLIND CAPTURE SYSTEM.

General Battery Corp. is prepared to grant nonexclusive licenses upon reasonable terms and conditions under the following patents. Inquiries with respect to licenses under General Battery Corp. patents should be addressed to Benasutti Associates, Ltd., Suite 1020 Suburban Station Bldg., 1617 John F. Kennedy Blvd., Philadelphia, Pa. 19103.

3,822,585. LEAK TESTER FOR BATTERIES.
3,861,575. APPARATUS FOR THERMAL RELAY WELDING.
3,938,368. AUTOMATIC AIR LEAK TESTING APPARATUS.
3,980,126. AUTOMATED POST BURN STATION.
3,982,624. APPARATUS AND METHOD FOR HANDLING AND STACKING BATTERY PLATES AND THE LIKE.
4,001,066. INTERCHANGE AND ALIGNMENT APPARATUS AND METHOD FOR HEATED PLATEN HEAT SEALING MACHINE.
4,080,732. ENVELOPER FOR WRAPPING THE PLATES OF AN AUTOMOTIVE STORAGE BATTERY.
4,081,093. APPARATUS FOR DUMPING AND COLLECTING CORROSIVE SUBSTANCES FROM AUTOMOTIVE BATTERIES.
4,158,382. APPARATUS FOR CASTING LEAD INTO PLASTIC FOR SIDE TERMINAL BATTERIES.
4,166,210. ELECTRODES FOR USE IN THE EXTRUSION-FUSION WELDING OF LEAD PARTS THROUGH AN APERTURE IN A BATTERY CASE.
4,173,326. CAST ON MOLD INSERTS.
4,381,325. BASKET DESIGN.

The following patents are offered by sale or license by Dana Corp.

3,460,506. MARINE OUTDRIVE LATCH.
3,469,606. MULTI-PORT ROTARY AND RECIPROCATING FLUID CONTROL VALVE.
3,470,844. MARINE OUTDRIVE LATCH.
3,529,617. FLUID FLOW PROPORTIONER.
3,626,467. MARINE DRIVE.
3,631,671. EXHAUST SYSTEM FOR MARINE OUTDRIVE.
3,752,437. MOLD CAPABLE OF BEING OPENED AND CLOSED.
3,754,717. COLLAPSIBLE MANDREL.
3,802,975. METHOD OF MAKING A CONTAINER.
3,842,691. PLANETARY TRANSMISSION.
3,854,620. CONTAINER.

For further information contact: Robert M. Leonardi Dana Corp., P.O. Box 1000, Toledo, Ohio 43697.

The following patents are offered by Robert V. Albertson. Correspondence should be addressed to WICKS & NEMER, Suite 1407 Soo Line Bldg., Minneapolis, Minn. 55402.

3,585,855. VEHICLE ENGINE TESTING APPARATUS.
3,673,701. COMBINED BUILDING HUMIDIFIER AND CLOTHES DRYER.
3,675,500. STEPWISE MOVABLE V-BELT DRIVE PULLEY.
3,676,013. AXIAL FLOW PUMP.
3,698,256. TRANSMISSION BELT-DRIVE SYSTEM.

The following patents are offered by Intercontinental Ideas, 704 West 34th St., Baltimore, Md. 21211. Attn: Norwood R. Warehime.

4,346,902. HANDBALL GAME UTILIZING PAIRED TETHERED BALLS.
4,339,133. MALLET DRIVEN SLIDING DISC GAME AND APPARATUS.
4,336,942. 3-WAY MINI-TENNIS GAME AND APPARATUS.
4,330,131. MULTI-TETHERED BALL ASSEMBLAGES AND THEIR USES.
4,346,884. MULTI-TEAM TUG-OF-WAR APPARATUS.
4,335,881. MULTI-SECTIONAL ASSEMBLED BASKET GOALS AND THEIR GAMES USES.
4,344,628. TURNSTILE GOAL AND GAMES USAGE.
4,352,255. GROUP USE TOY STRUCTURAL CONSTRUCTION SET.

4,352,497. FOOTBALL (SOCCER) GAME WITH MOBIL GOALS.

The General Electric Co. is prepared to grant non-exclusive licenses under the following patents on reasonable terms to domestic manufacturers and requests publication of this notice in the Official Gazette:

4,227,944. METHOD OF MAKING COMPOSITE CONDUCTIVE STRUCTURES IN INTEGRATED CIRCUITS.
4,228,212. COMPOSITE CONDUCTIVE STRUCTURES IN INTEGRATED CIRCUITS AND METHOD OF MAKING SAME.
4,247,830. PLASMA SPRAYED WICKS FOR PULSED METAL VAPOR LASERS.
4,284,664. FIBER REINFORCED CERAMICS WITHOUT PRESSING OR SINTERING USING A SLURRY COMPRISING A SILICATE AND A POWDERED CERAMIC.
4,284,979. CODING SYSTEM FOR SIMULTANEOUSLY SIGNALLING SELECTED ONES OF A PLURALITY OF DEVICES.
4,291,278. PLANAR MICROWAVE INTEGRATED CIRCUIT POWER COMBINER.
4,297,880. DOWNHOLE PRESSURE MEASUREMENTS OF DRILLING MUD.
4,302,686. CHARGE TRANSFER SERIAL-TO-PARALLEL CONVERTER.
4,304,451. INTERCONNECTION TECHNIQUE FOR DOWNHOLE INSTRUMENTATION.
4,324,760. HYDROGEN DETECTOR.
4,324,761. HYDROGEN DETECTOR.
4,328,417. BANDWIDTH COMPENSATED QUARTER-WAVE COUPLED POWER COMBINER.
4,344,235. LEVITATED BALL INCLINOMETER.
4,279,656. LIGHT-TRANSMITTING SILICON NITRIDE.
4,279,657. LIGHT-TRANSMITTING SILICON NITRIDE.
4,310,996. CEMENT REINFORCED GYPSUM FOAM WITH MINERAL WOOL.
4,316,938. HIGH DENSITY CARBON ADSORBENT COMPOSITE.
4,331,080. COMPOSITE HIGH EXPLOSIVES FOR HIGH ENERGY BLAST APPLICATIONS.
4,351,867. THERMAL INSULATION COMPOSITE OF CELLULAR CEMENTITIOUS MATERIAL.

Applications for licenses should be addressed to: Division Patent Counsel, Space Systems Division, General Electric Co., P.O. Box 8555, Philadelphia, Pa. 19101

Applications for license may be addressed to Patent Counsel, Gas Turbine Division, General Electric Co., 1 River Rd., Bldg. 500, Room 218, Schenectady, N.Y. 12345.

4,325,583. LOW AXIAL STIFFNER THRUST BEARING.

Application for license may be addressed to: Patent Counsel, Mobile Radio Products Department, General Electric Co., Mountain View Rd., Lynchburg, Va. 24502.

4,361,821. CAPACITOR COUPLING ARRANGEMENT FOR UHF RESONANT STRUCTURE.

Applications for license may be addressed to General Electric Co., Motor Business Group, 1635 Broadway P.O. Box 2204, Fort Wayne, Ind. 46801-2204.

4,274,072. THERMOSTAT AND ASSEMBLY THEREFOR.

Applications for license may be addressed to: Patent Counsel, Aerospace Control Systems Department, General Electric Co., P.O. Box 5000, Binghamton, N.Y. 13902.

4,157,583. CIRCUIT BOARD CLAMPING ASSEMBLY.
4,207,541. COOLING JACKET FOR LASER FLASH LAMPS.

Applications for license under the following patents should be addressed to: Mr. Arnold E. Renner, Division Patent Counsel, Industrial Electronics Systems Division, General Electric Co. 1501 Roanoke Blvd., Salem , Va. 24153.

3,370,676. MINE HOIST SYSTEM INCLUDING A MAIN COUNTER FOR LEVEL DETERMINATION AND A JOG COUNTER FOR LEVEL OFFSET.
3,425,515. DIGITAL CONTROL FOR MINE HOIST SYSTEM.
3,440,568. GENERATOR FOR AMPLITUDE AND FREQUENCY MODULATED LOW-FREQUENCY ALTERNATING VOLTAGES.
3,500,386. COUNTER CONTROL CIRCUIT FOR AN ANALOG TO DIGITAL CONVERTER.
3,559,017. PULSE SYNCHRONIZING MOTOR CONTROL.
3,601,674. CONTROL SYSTEM FOR FIRING SCR'S IN POWER CONVERSION APPARATUS.
3,611,097. DIGITAL CONTROL SYSTEM FOR AC TO DC POWER CONVERSION APPARATUS.
4,041,361. CONSTANT TORQUE INDUCTION MOTOR DRIVE SYSTEM.
4,316,185. BATTERY MONITOR CIRCUIT.

Trademark Data Exchange

Under the provisions of Section 6(a) of title 35, United States Code, the Commissioner of Patents and Trademarks has entered into an exchange agreement with N.V. Compu-Mark S.A., an international firm headquartered in Mortsel, Belgium, that is involved in worldwide trademark searching, for the preparation of a computer data base of the text of all active trademark registrations. In return, the Patent and Trademark Office will provide Compu-Mark with copies of selected Office documents, records and trademark information on computer tapes and future updates to the data base through 1992.

The PTO would welcome proposals from other interested suppliers to provide the same or equivalent materials and services. Proposals received by Mar. 31, 1983 will be evaluated and considered by the Office.

Additional information, including copies of the PTO-Compu-Mark agreement, may be obtained from: J. Howard Bryant, Administrator for Automation, U.S. Patent and Trademark Office, Washington, D.C. 20231. Telephone (703) 557-3967

GERALD J. MOSSINGHOFF,
Commissioner of Patents and Trademarks.

Jan. 11, 1983.

PATENT NOTICES

Certificates of Correction for the Week of Feb. 8, 1983

Pp. 4,913	4,297,476	4,342,516	4,354,613
Re. 29,660	4,304,677	4,342,740	4,355,351
Re. 30,883	4,305,063	4,342,854	4,356,124
Re. 30,990	4,307,677	4,343,042	4,356,634
Re. 31,007	4,309,977	4,343,080	4,356,645
3,759,728	4,311,381	4,343,194	4,357,051
3,912,800	4,311,832	4,343,778	4,357,146
3,947,327	4,313,850	4,345,718	4,357,151
4,002,758	4,315,004	4,345,725	4,357,399
4,028,188	4,315,678	4,346,178	4,357,632
4,122,247	4,315,796	4,347,198	4,358,038
4,124,750	4,315,997	4,348,203	4,358,236
4,178,231	4,318,916	4,348,469	4,358,305
4,208,408	4,323,110	4,348,667	4,358,518
4,220,763	4,326,385	4,349,094	4,358,841
4,221,260	4,328,373	4,349,299	4,358,919
4,222,715	4,328,437	4,349,456	4,359,104
4,224,034	4,329,030	4,349,680	4,359,167
4,230,816	4,329,913	4,350,200	4,359,250
4,230,966	4,330,155	4,350,487	4,359,322
4,234,806	4,333,693	4,350,513	4,359,607
4,238,317	4,334,475	4,350,536	4,359,678
4,241,415	4,334,775	4,350,990	4,359,820
4,244,602	4,335,262	4,351,513	4,359,821
4,258,850	4,336,129	4,351,532	4,359,874
4,259,694	4,336,465	4,351,542	4,360,764
4,264,142	4,337,368	4,352,221	4,360,770
4,267,321	4,338,029	4,353,081	4,360,829
4,269,368	4,338,220	4,353,335	4,360,891
4,273,784	4,338,234	4,353,694	4,361,203
4,276,151	4,338,326	4,353,702	4,361,613
4,278,888	4,338,967	4,353,926	4,362,193
4,281,404	4,339,989	4,353,977	
4,283,363	4,340,684	4,354,023	
4,287,935	4,340,713	4,354,200	
4,292,585	4,341,457	4,354,293	
4,297,002	4,342,062	4,354,315	

Disclaimers

3,244,061.—*Monroe H. Sweet,* Binghamton, N.Y.; *Russell P. Easton* and *First-City National Bank of Binghamton, N.Y., administrators of said Monroe H. Sweet, deceased.* DIRECT READING TRI-STIMULUS COLOR ANALYZER. Patent dated Apr. 5, 1966. Disclaimer filed Sept. 30, 1982, by the assignee, *Eastman Kodak Co.*

Hereby enters this disclaimer to all claims of said patent.

3,244,062.—*Monroe H. Sweet,* Binghamton, N.Y.; *Russell P. Easton* and *First-City National Bank of Binghamton, N.Y., administrators of said Monroe H. Sweet, deceased.* PHOTO-ELECTRICAL SENSITOMETRIC MEASURING APPARATUS. Patent dated Apr. 5, 1966. Disclaimer filed Sept. 30, 1982, by the assignee, *Eastman Kodak Co.*

Hereby enters this disclaimer to all claims of said patent.

3,294,578.—*Stanley P. Popeck,* Nimmonsburg, N.Y. DEPOSITION OF A METALLIC COAT ON METAL SURFACES. Patent dated Dec. 27, 1966. Disclaimer filed Sept. 30, 1982, by the assignee, *Eastman Kodak Co.*

Hereby enters this disclaimer to all claims of said patent.

3,368,898.—*Daniel A. Nepela,* Saratoga, Calif. AUTOPOSITIVE FILM AND PAPER AND EMULSIONS THEREFOR. Patent dated Feb. 13, 1968. Disclaimer filed Sept. 30, 1982, by the assignee, *Eastman Kodak Co.*

Hereby enters this disclaimer to all claims of said patent.

3,451,902.—*Steven Levinos,* Vestal, N.Y. PROTECTIVE LOCALIZED AREA RESIN COATINGS FOR ELECTROPLATING. Patent dated June 24, 1969. Disclaimer filed Sept. 30, 1982, by the assignee, *Eastman Kodak Co.*

Hereby enters this disclaimer to all claims of said patent.

3,477,745.—*James W. Williams,* Los Angeles, and *Phillip K. Proctor,* Anaheim, Calif. QUICK CONNECTION OF PIPE TO DUCTING. Patent dated Nov. 11, 1969. Disclaimer filed Nov. 29, 1982, by the assignee, *Allied Insulation Co. doing business as Permanent Pipe Products Co.*

Hereby enters this disclaimer to claims 1, 5 and 6 of said patent.

3,498,723.—*Gordon W. Nichols,* Binghamton, N.Y. MOVIE CAMERA EXPOSURE INTEGRATOR. Patent dated Mar. 3, 1970. Disclaimer filed Sept. 30, 1982, by the assignee, *Eastman Kodak Co.*

Hereby enters this disclaimer to all claims of said patent.

3,596,579.—*John F. Coughlin* and *Ralph I. Berge,* Binghamton, N.Y. EXPOSURE CONTROL AND LOW-LIGHT WARNING SYSTEM. Patent dated Aug. 3, 1971. Disclaimer filed Sept. 30, 1982, by the assignee, *Eastman Kodak Co.*

Hereby enters this disclaimer to all claims of said patent.

4,252,894.—*Felix Viro,* Apalachin, N.Y.; and *Salvatore Emmi,* Portland, Oreg. HYDROPHILIC COLOR COUPLER COMPOSITION CONTAINING DIEPOXIDE. Patent dated Feb. 24, 1981. Disclaimer filed Sept. 30, 1982, by the assignee, *Eastman Kodak Co.*

Hereby enters this disclaimer to all claims of said patent.

4,297,918.—*Forbes G. deB. Perry,* Forest Row, England. CONTROL SYSTEMS FOR STEPLESSLY-VARIABLE RATIO TRANSMISSIONS. Patent dated Nov. 3, 1981. Disclaimer filed Nov. 4, 1982, by the assignee, *National Research Development Corp.*

Hereby enters this disclaimer to claims 4 and 5 of said patent.

Automation Executive Summary

In view of the many requests for and expressions of interest in the Section 9 automation report, which was submitted to the Congress on Dec. 13, 1982, an executive summary (Volume I) of that report is reprinted below. Volumes II and III, which are much more detailed and technical in nature, are available in limited quantities. Copies may be requested from Dr. J. Howard Bryant, Administrator for Automation, Patent and Trademark Office, Washington, D.C. 20231.

GERALD J. MOSSINGHOFF,
Commissioner of Patents and Trademarks.

Jan. 13, 1983.

PREFACE

This document presents the Patent and Trademark Office (PTO) 1982 master plan for automating office operations. The plan is the outgrowth of a recognized need to improve patent and trademark operations through application of computer technology. Preparation of the plan was mandated by Section 9 of P.L. 96-517 which states:

> "The Commissioner of Patents and Trademarks shall report to Congress, within two years after the effective date of this Act, a plan to identify and if necessary develop or have developed computerized data and retrieval systems equivalent to the latest state of the art which can be applied to all aspects of the operation of the Patent and Trademark Office, and particularly to the patent search file, the patent classification system and the trademark search file. The report shall specify the cost of implementing the plan, how rapidly the plan can be implemented by the Patent and Trademark Office, without regard to funding which is or which may be available for this purpose in the future."

The goal of the plan is to automate the PTO by the 1990's. The plan was developed considering the mission of the PTO, existing automated systems and mission support needs, and areas where automation will produce operational benefits. Particular attention was given to program and management requirements achievable within the limits of current and emerging automation technology. The plan will be revised and updated annually to reflect technological changes and the availability of resources.

It is proposed that automation be accomplished in three stages. During the first stage, one patent group (Group 220), which deals with all areas of technology, would be automated. Supporting pre-examination, post-examination, classification, and management information would be automated as well. In addition to Group 220, all of trademarks would be automated. The other patent groups and functions would be automated in the second stage. The final stage would expand dissemination and access capabilities and make possible worldwide electronic access to patent and trademark information.

A PTO team from program and support offices, coordinated by the Office of Finance and Planning, prepared the plan. It was augmented by a team from the MITRE Corporation which provided an independent assessment of automation technology. Commissioner Mossinghoff appointed a special advisory committee to review and evaluate the draft plan. Experts in the field of automation from other government agencies comprised this committee: Dr. Rona B. Stillman, Associate Director (Technical), Directorate of Computer Resources, Headquarters United States Air Force; Mr. James H. Burrows, Director, Institute for Computer Sciences and Technology, National Bureau of Standards; Mr. Melvin S. Day, Director, National Technical Information Service; and Mr. Louis N. Lushina, Director, Information Systems Division, National Aeronautics and Space Administration. Arlene Tripplett, Assistant Secretary for Administration, and Dennis Boyd, Executive Director, Information Resource Management, both with the Department of Commerce, provided guidance and assistance throughout the conduct of the study. In addition, over 600 copies of the draft plan were circulated to individuals, commercial organizations, and interested associations for their comment. The PTO held a public hearing to provide a forum for comment and reaction to the Section 9 requirement of P.L. 96-517. The participation and recommendations by both constituents and vendors provided a valuable contribution to the preparation of the final master plan.

To complete the plan and begin its implementation, centralized management of the automation program was needed to assure that plans will be coordinated and resources effectively used. This was accomplished through the organization of all automation activities into a single office under an Administrator for Automation. To assure continuing top management involvement and guidance as the plan is implemented, an automation coordinating committee, chaired by the Commissioner of Patents and Trademarks and composed of the managers of the program and support offices, was formed. The Commissioner was involved personally in planning this important automation project and approved all key managerial strategies. Among these were decisions to rely heavily on the private sector to provide the automated capabilities that will be required and to offer maximum latitude for private sector involvement in long term automation operations.

Volume 1

AUTOMATING THE PATENT AND TRADEMARK OFFICE

CONTENTS

Volume 2

AUTOMATION MASTER PLAN

(Separately Bound)

Volume 3

AUTOMATION MASTER PLAN APPENDICES

(Separately Bound)

VOLUME 1

AUTOMATING THE PATENT AND TRADEMARK OFFICE

DEPARTMENT OF COMMERCE
Patent and Trademark Office
December, 1982

Mission Needs:

To Reverse Current Trends

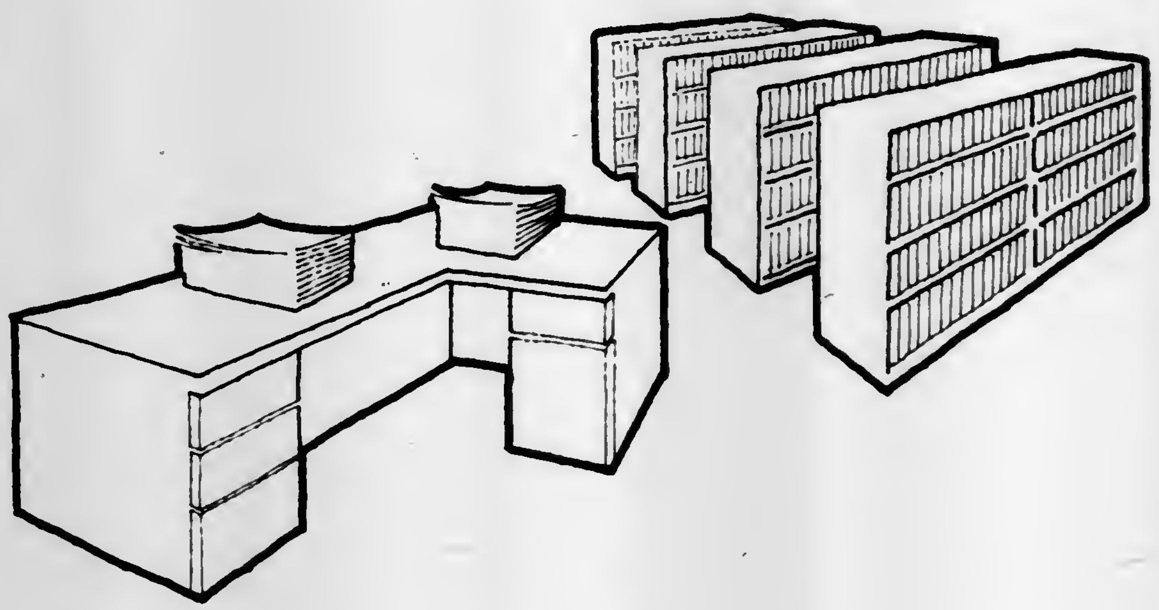

- **Search documents are stored and retrieved in an *all-paper hand-file* system—*24 million* documents on file now will double by the year 2000.**
- ***7%* of the 24 million documents are *missing or misfiled.***
- **Error-plagued *manual handling* of *360,000* active cases and *20,000* papers received each day is *reducing productivity.***
- **Decisions to grant patents and register trademarks are increasingly based on incomplete data.**

MISSION NEEDS

The mission of the Patent and Trademark Office (PTO) is to promote the national economy by administering the provisions of the patent and trademark laws of the United States. Patent laws encourage technological advancement by providing incentives to invent, invest in, and disclose new technology. Trademark laws assist businesses in protecting their investments in the promotion of goods and services and safeguarding consumers against confusion and deception in the market place as to the origin of goods and services.

To carry out this mission, the PTO processes and examines over 100,000 patent and 60,000 trademark applications annually. In the examination process, the PTO compares patent application subject matter to a large body of technological information to determine that the inventions are new and not obvious to someone knowledgeable in that field. The marks shown in new applications are compared to registered product and service brand names to ensure they are not confusingly similar. For the most part, the comparison process is carried out manually by searching paper files which are organized for this purpose. Applications are handled by routing paper copies and maintaining manual control and reporting procedures.

The already large body of information against which applications must be compared is growing rapidly. The continued growth of paper files is at the heart of the problem the PTO faces in carrying out its mission effectively. As the information base increases, the resources necessary to maintain it in a usable form also increase. Since the files are paper and loosely assembled to facilitate searching, their integrity is degrading steadily because of lost or misfiled documents. Up to seven percent of the 24 million document file is missing at any point in time. These factors threaten to compromise the quality, even the viability, of the patent grant and the trademark registration. Processing paper applications requires moving large amounts of paper frequently and matching some 20,000 pieces of mail daily with corresponding files distributed throughout PTO offices. Resources to maintain the search files and the paper handling procedures have been diverted from functions which directly support the PTO mission. As a result, filing receipts have become delayed, responses to correspondence have become slow, papers and files have been lost, backlogs have increased and are reflected in increased application pendency time. The longer pendency periods are in conflict with the mission objectives of quickly conferring rights to inventions, registering trademarks, and disseminating information to the public.

Patent information dissemination is important because of the "multiplier" effect technological disclosures have on further invention and potential infringement. Trademark information dissemination is important because it allows businesses to determine the availability of marks and the existence of potential infringement. Dissemination is limited by paper files located only in the PTO in the Washington, D.C. area. The files are costly to reproduce and maintain in more accessible locations around the country. Similarly, methods of accessing the patent paper file are largely restricted to the use of the patent classification system.

The methods for satisfying mission needs are limited to either increasing staff or developing a more efficient process. The PTO has chosen a balanced course of action which will improve quality and reduce backlogs in the short run by redirecting staff resources to critical operating problems, and in the long run by developing a more efficient process through extensive automation. The development of an automated system to support future operations is one of the highest priority mission needs of the PTO.

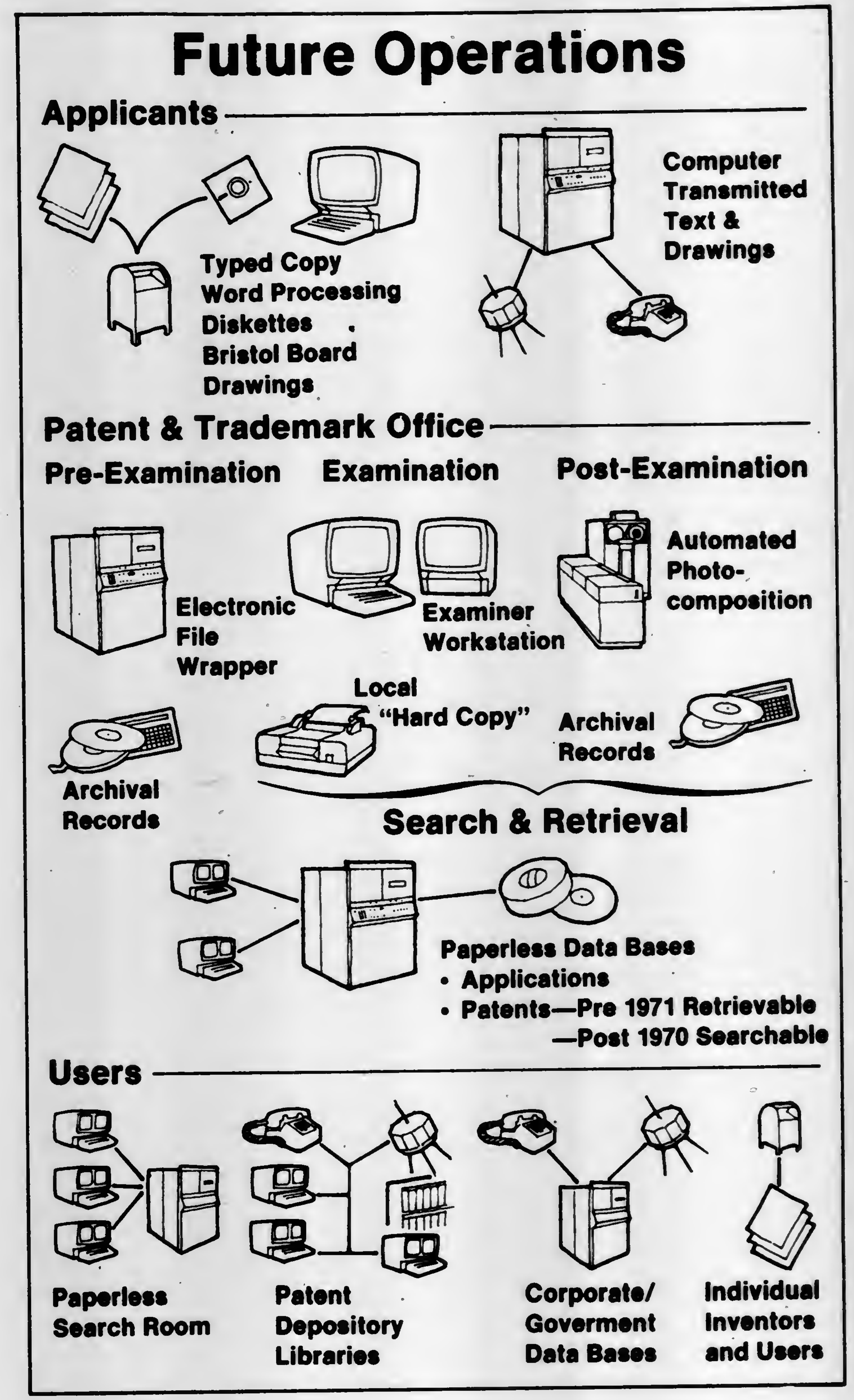

FUTURE OPERATIONS

The primary goal of the automation program is to support more fully all PTO processes so that they are completed in a more timely and efficient manner. This goal will be realized through a virtually paperless patent and trademark operation. Three automation capabilities are key to this concept. First, most paper files and paper handling operations will be replaced by electronic and other computer accessible data bases. Second, communications with applicants and constituents will be in modes and media chosen by them and supported through electronic terminals, telecommunications and other automation technology. Finally, most patent and trademark pre-examination, examination, post-examination, classification, and management control functions will be supported through electronic workstations and automated or computer assisted operations. Through the workstations, data base access will be obtained and routine operations, consistent with standard practices and the intellectual, professional nature of the work, will be performed.

Today, processing is accomplished through predominantly manual operations. A patent application arrives in the office where pre-examination activities—fee processing, bibliographic data base creation, receipting, tentative art unit (or technology) selection, file wrapper preparation, statutory compliance checking and national defense security screening—are performed. Then the application is forwarded to an art unit where, after waiting its turn, the application undergoes examination. This includes a search of U.S. patents, foreign patents, non-patent literature, and related pending applications for possible interference. Next, the examiner prepares official actions, communications, and interview summaries, as appropriate. Following the examination, supervisors and quality control personnel may review the results. Some applications undergo additional processing related to interference, appeals and other matters. Entry of the approved application into a photocomposition data base, fee processing, patent printing, and archiving constitute post-examination. Processing for trademarks is analogous.

In the future system, current paper files will be replaced by electronic text and digital image data bases. The electronic text data base for patents will contain most U.S. patents issued between 1971 and 1975 and all U.S. patents since 1975. The rest of the files will be selectively incorporated. All active trademark registrations will also be stored in an electronic text data base. The image data base will contain all drawings and the entire backfile of text not in the electronic text data base. In addition, the image data base will contain foreign patents and technical reference literature. All pending applications will be included in both the electronic text and image data bases. Currently, all papers relating to an application are collected in a paper folder known as the "file wrapper." In the automated system, an "electronic file wrapper" will tie together all text and images associated with an application. Passwords and other techniques will be used to maintain application confidentiality and protect national security interests.

Communication with an applicant will be conducted in one of three basic modes. Paper applications still will be accepted, but in a standard format to maximize the efficiency of converting them to machine readable form. Applications also will be accepted on word processing media or directly from another computer by telecommunications. The transmission of office actions, receipts, and other correspondence will be in any of the above modes, as chosen by the applicant.

Automation of most operations will require supporting a large variety of users—both internal and external. Internal users will perform their primary functions using

Search & Retrieval

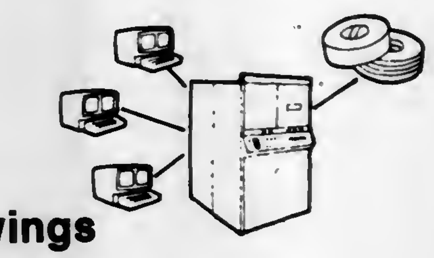

All Post-1970 & Selected Pre-1971 U.S. Patents
- **Searchable Full Text**
- **Computer Retrievable Drawings**

Entire Patent Backfile
- **Searchable by Sub-Classes**
- **Computer Retrievable**
- **Rapid Display in Eye-Easy Form**
- **Available on Microform**

Foreign References and Technical Literature
- **Computer Retrievable**
- **Available on Microform**
- **Automated Input from Foreign Patent Offices**
- **Examiner Selected Input**

Commercial and Foreign Data Bases

Automated Search Methods
- **Key Word** • **Index** • **Full Text**
- **Thesaurus** • **Classification**

Computer Retrieval of Text and Images
- **Visual Display Terminals**
- **Paper** • **Microform**

electronic workstations to gain access to the electronic data bases and perform other tasks. The workstation will provide easy-to-use controls and procedures with capabilities for satisfying the unique requirements of each user. Capabilities will include search and retrieval of data from the text and the image data bases; the collection, analysis and reporting of management information; data entry and data base maintenance; and a variety of professional and administrative services. These capabilities will allow the functions of pre-examination, examination and post-examination to be accomplished predominantly through the automated system. They will eliminate the need for processing and routing applications and related correspondence in paper form.

Pre-Examination

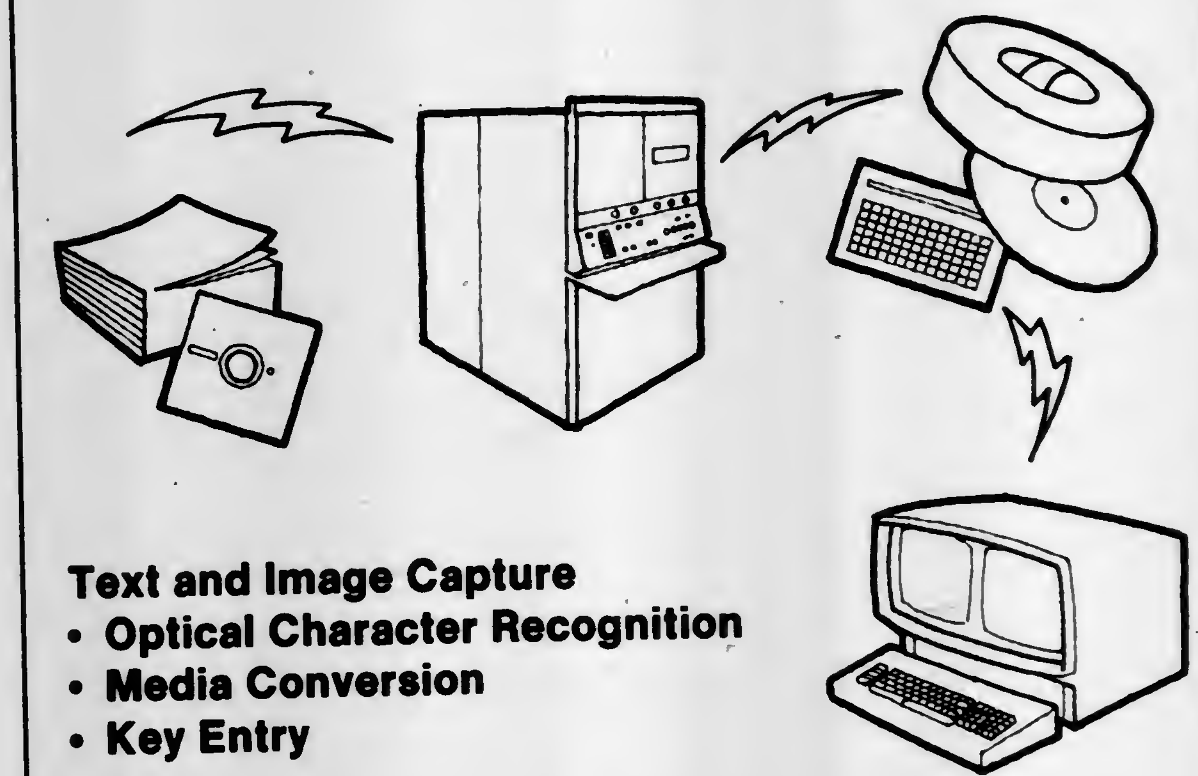

Text and Image Capture
- **Optical Character Recognition**
- **Media Conversion**
- **Key Entry**

Creation of "Electronic File Wrapper"
- **Date Stamping** • **Numbering** • **Classification**
- **Bibliographic Extraction**
- **Text and Image Referencing**

Computer Assisted Preprocessing
- **Statutory Screening** • **Security Screening**
- **Fee Processing** • **Receipting** • **Initial Docketing**

Archival Record of all Papers

Management Data Capture

Communication Mode Chosen by Applicant

Pre-examination

Applications will be submitted to the PTO either in machine readable form on diskette or directly through telecommunications. Alternatively, they may be submitted on paper that can be processed by an optical character reader (OCR) or by keying. After initial processing, the contents of the application will be in a form suitable for processing into the electronic text and image data bases. An "electronic file wrapper" will be created and assigned a serial number through a computer assisted process. The entire contents of the "wrapper" then will be available for direct viewing at an electronic workstation, where it will be reviewed for statutory and rule compliances, screened for national security implications, classified by technology or art area for routing to an examination group, and checked for correct fee submission. Financial transactions will be generated. After these steps, an archival copy will be made. With the entire contents of the application now captured in electronic form and copied for the archives, the original application, if not transmitted electronically, may be destroyed or returned with an acknowledgement receipt.

Beginning with data capture and pre-examination processing, the system will record and maintain a data base that reflects the status of the application through each processing step.

Examination

Automated Examiner Docket Update

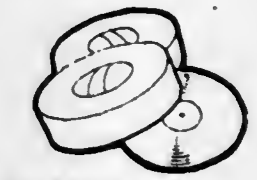

Application Review—Electronic File Wrapper Access
- **Bibliographic Data** • **Text and Images**
- **Reference Documents/Images**

Data Base Search & Retrieval
- **Patents and Applications**
- **Foreign Data Bases**
- **Commercial Data Bases**
- **Optional "Hard Copy"**

Examiner Generated Private Files
- **Document Annotation**
- **Informal Bibliographies**

Office Actions
- **Examiner Generated Using Form Paragraphs**
- **Composition and Editing**
- **Routing for Pool Generation**
- **Automatic Entry in Electronic File Wrapper and Archived**

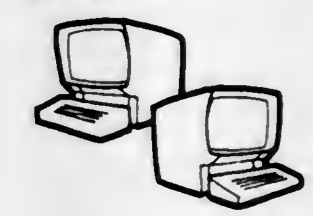

Application Paper Entered in Electronic File Wrapper & Archived

Professional Services at Electronic Workstation
- **Access to Regulations, Statutes, Operating Procedures**
- **Electronic Mail** • **Calendar Maintenance**
- **Directory Assistance** • **Document Distribution**

Examination

After pre-examination, an application will automatically be placed on a patent group's electronic examination list (docket). A supervisor will be able to retrieve and review the application and further assign it to an appropriate art unit and/or examiner by placing it on either a unit or examiner electronic docket.

The examination will be conducted predominantly at an electronic workstation. The examiner will retrieve the electronic file wrapper for application review. The workstation will have multiple display screens so that the examiner may view both the text and the drawings of any document and compare the application text and drawings to those of other patent or reference materials. Examiners will have the ability to print high quality copies of electronic documents. All U.S. patents and pending applications will be searched to detect potential interferences; i.e., other applications with conflicting claims. Through commercial data bases, the examiner may access English translations of foreign patent abstracts and non-patent literature. Examiners may save and annotate electronic copies of these searches in personal electronic files for future reference. Computerized search aids, such as the Master Classification File, the Classification Index, the Manual of Classification, and the classification definitions, will be available to identify appropriate classes/subclasses and patents. Additionally, computerized technical thesauri will be available to help identify equivalent conceptual terms. Ownership assignment files will be accessible to identify other patents by the same inventor or assigned to the same company.

The examiner will prepare the Office action, including suggested changes to specifications and claims of the application, using form paragraphs to limit manual effort and reduce the need for typist assistance. Memoranda of attorney-examiner interviews can also be prepared and sent more easily and speedily. Application changes will be integrated into the data bases which subsequently will be used to print the patent grant. All application modifications and correspondence will be stored, forming an electronic file history, until they can be archived and removed from the on-line system.

If the examiner has a question about procedure or legal information, the workstation can be used to retrieve the text of references such as the Manual of Patent Examining Procedures, federal regulations, Board of Appeals decisions, relevant portions of the U.S. Code, petitions to the Commissioner, and the decisions of Courts of Record. Commercial data bases may be accessed.

The workstation will be part of a "local" network to permit electronic mail, message center service, directory assistance, and other professional support services. Supervisors may have work routed to them electronically for review. This will contribute to efficiency and productivity by speeding review and coordination. Management will have immediate access to active application status and production data.

Once the application has been approved for issue or rejected, the normal patent examination phase is completed. The data bases will be updated to indicate final disposition of the application and released for post-examination processing.

The processing of international applications, under the Patent Cooperation Treaty (PCT), will be handled in a similar system with the possibility of electronic exchange with other countries, the World Intellectual Property Organization, and the international administrative body of the PCT.

Post-examination

Once the examination is completed, the approved application will be extracted automatically from the electronic data base and prepared for photocomposition. The final form will be reviewed and approved at a workstation. A random sample of cases will be automatically selected and docketed for quality review. Fee processing will be initiated.

The complete contents of all electronic file wrappers will be archived in a readily retrievable form. Abandoned applications will be flagged as owner proprietary. Following this process, patents will be made available for public search and subsequent dissemination to interested domestic organizations and foreign patent offices. If a new patent application cites an abandoned application, however, the abandoned patent will become public. It will be retrieved from the archives and entered in the searchable data bases.

Maintenance fee processing and status information on issued patents will be handled through the system, in addition to the re-examination of issued patents.

Trademark Operations

There are similarities in the functions which support the patent and trademark processes but also significant differences. Pending trademark applications are available to the public while pending patent applications are confidential. The same search files are used by trademark examiners and the public while there are separate patent search files for examiner and public use. Potential references can be identified for examiner evaluation with far less human intervention during the trademark search than is possible with patents. Although the searching function is simpler and does not require the number of iterations that patent searching does, the search techniques are equivalent. The first search can be accomplished with the system by matching search criteria to full or partial text and/or design mark attributes. The examiner will have options of searching with synonymous or phonic equivalents and/or of constructing more refined searches based on the results of previous searches.

The trademark registration procedure contains several steps that have no exact counterpart in patents. When an application is allowed by the examiner, it is published for opposition. The opposition period, in which the public can institute legal proceedings against registration of the mark, is thirty days. Thereafter, if no opposition is filed, the registration is issued. While trademarks are registered for twenty years, a mark will be cancelled if the registrant fails to file an affidavit of use by the sixth anniversary. When the affidavit of use is filed, the remainder of a twenty year cycle of legal rights is instituted. Thereafter, a registration may be renewed every twenty years as long as the mark continues to be used.

As has been described for patents, the future system will support most phases of trademark operations. The trademark data base will include text and images related to word and design marks. The design marks will be indexed to facilitate retrieval. An ownership data base will provide the chronology of ownership, including licenses. Also, data on application/registration status will be maintained. This will provide a complete history of the application/registration, including all communications between the applicant/owner and the Office. Data base access will be accomplished through electronic workstations using system capabilities similar to those discussed with reference to patents. Pre-examination, post-examination, and management functions also will be supported in a comparable manner.

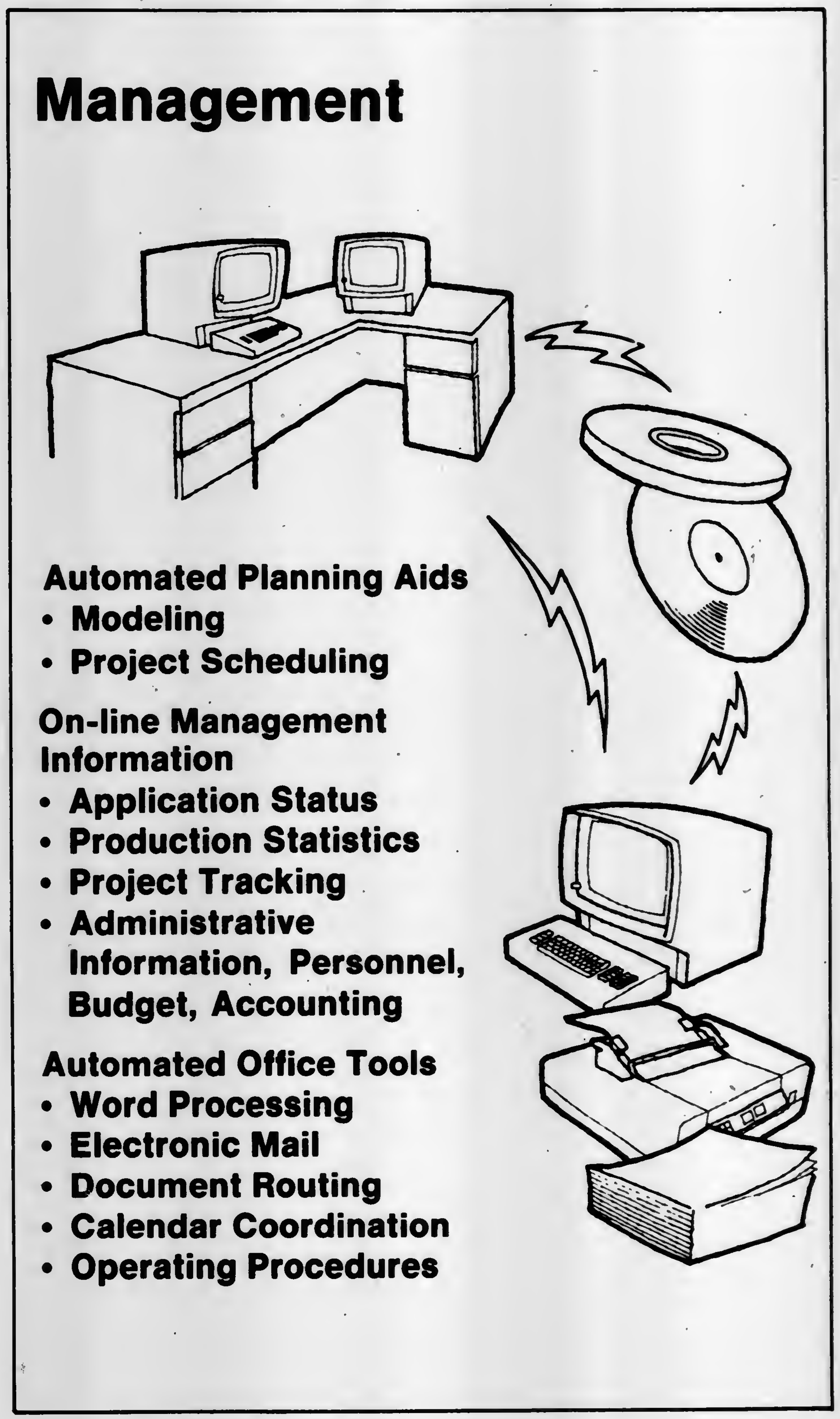

Management

The PTO management functions are typical of any large organization and include planning, directing, coordinating, and controlling. Planning is becoming an increasingly formalized effort to better control mission performance by continuously comparing actual to planned accomplishments. Management currently uses models to aid in planning and budgeting by projecting resource requirements needed to meet program goals. In the future, more sophisticated analytical models will be required to refine production estimates and schedules. More comprehensive activity tracking aids will be required to assist with program control. Model data will need to be linked directly to budget formulation, and planning systems, in turn, will need to be linked to accounting and budget execution.

In the future system, management will be supported by more complete and up-to-date management information. Automatic or semi-automatic activity and event recording, data base updating and management information reporting will be performed. Interactive terminals will allow immediate access to all management information. Status information may be compared to plans, variances high lighted, and summary electronic reports produced. Models will be available to allow the entire work process to be examined under hypothetical conditions as an aid to planning and decision making. Work products may be routed electronically for review and concurrence. Proposed plans on actions may be electronically coordinated. The system will provide electronic mail, document routing, project scheduling/tracking, calendar coordination, operating procedures retrieval, and other similar tools to support management functions.

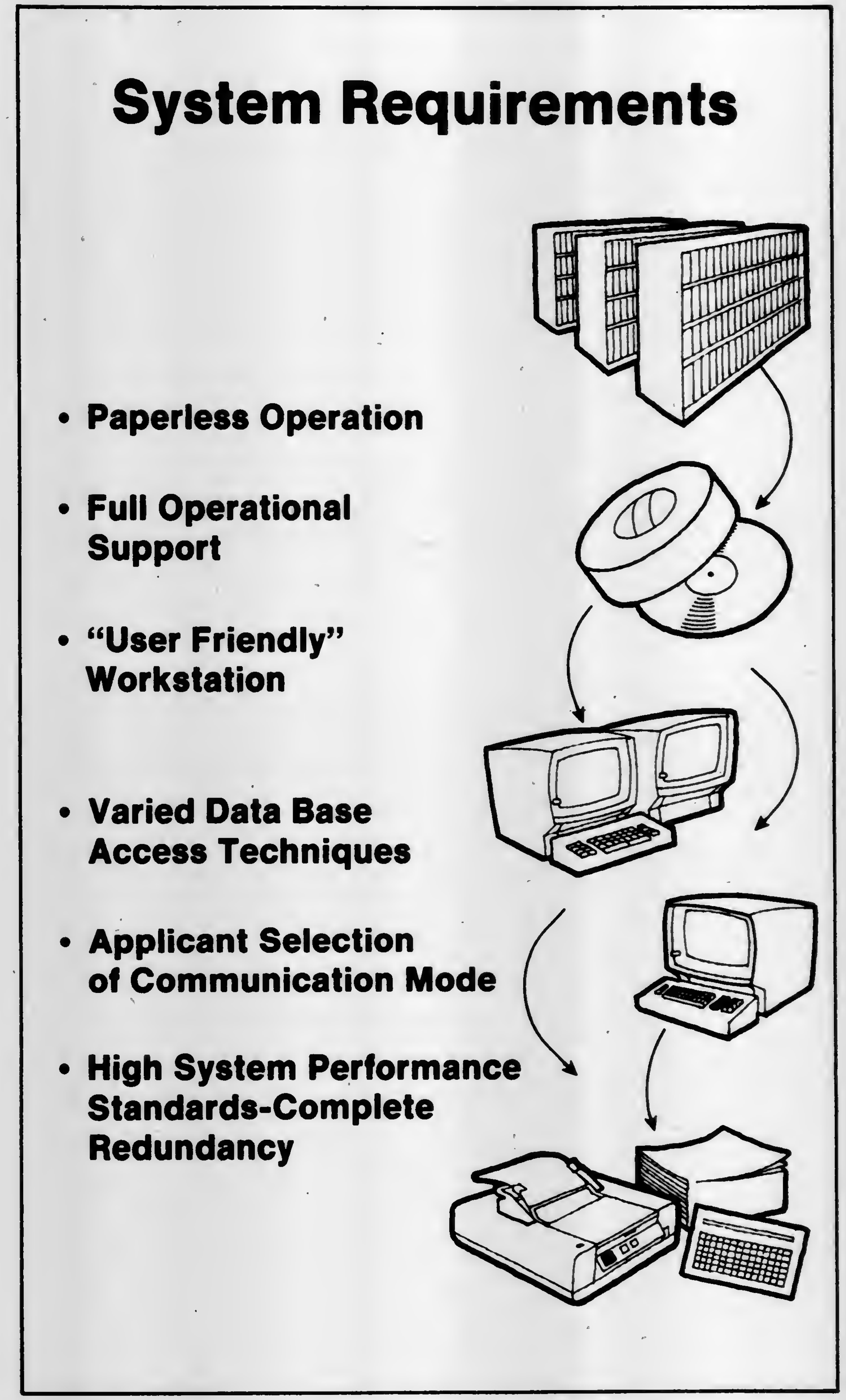

SYSTEM REQUIREMENTS

The concept of future PTO operations, briefly described in the preceding sections, requires a number of operational features that will determine the architecture of the system of the 1990's. The more significant of these are described below.

To achieve the proposed automated systems, it will be necessary to convert current and future files into electronic text and image data bases. Image data must be either stored electronically using optical or conventional magnetic disk technology, or stored as micro images and converted to electronic form at time of retrieval so that it can be transmitted to electronic workstations. Because of the size and costs of data base storage and retrieval, centralized master data bases will be necessary. The current files, which already would tax the capacity of available computer magnetic storage devices, are expanding continuously. High speed search—using a variety of techniques such as keywords, classification indexes, full text scanning—and high speed retrieval and transmission of electronic text and images will be necessary. Images will be closely scrutinized and, therefore, require high resolution storage and display.

The future system would support most functional operations of the PTO. This will require supporting a large number and variety of users—over 2,000 professional examiners and information specialists, administrative and clerical support personnel, managers and executives—within the PTO. The system would provide support for applicants, attorneys, and other users outside the PTO. Each user group will place different demands on the system, depending on the nature of its needs or work.

Uniformity and consistency in the method of workstation operation will be important to make the workstation easy to use by each group of users. However, workstation configurations that satisfy the unique display and control needs of each group will be necessary to keep their use simple and to minimize cost. For novice users, computer-aided instruction will be necessary to supplement menu-driven operating procedures. Some workstation configurations must include multiple displays which may be subdivided into multiple work areas for viewing, editing, or composing. A sufficient number of clearly labeled function keys will be required to minimize keystroking and to control workstation components. For more experienced users, an alternate command language will be needed to expedite task performance and minimize frustration caused by long, forced-use menu sequences. Uniform procedures and language for accessing and using all data bases, including commercial ones, will be required. To access commercial data bases, translation will be necessary for uniformity and user simplicity.

Applicants and other non-PTO users will be allowed to select the medium or mode of communicating or interacting with the system—either on paper, word-processing diskettes, or electronically from a terminal or another computer. This will require the capability to accept and process a variety of data formats and media and to produce a corresponding variety of outputs. PTO users will, likewise, have a choice of the output medium— electronic, paper, and/or microform.

System performance requirements will be extremely demanding. Response times for search, retrieval, and document scanning must be within the time frames set by current practice. Documents in a selected set must be simultaneously available, and the text and drawings simultaneously visible. Paging and document selection must match manual rates. An automated system is the only reasonable method of accomplishing PTO functions for the future.

System Development Approach

- **Modular Architectural Concept**
- **Early Operating Capabilities**
- **Evolutionary Expansion & Enrichment**
- **Maximum use of Shelf Components**
- **Consistency in Interfaces**

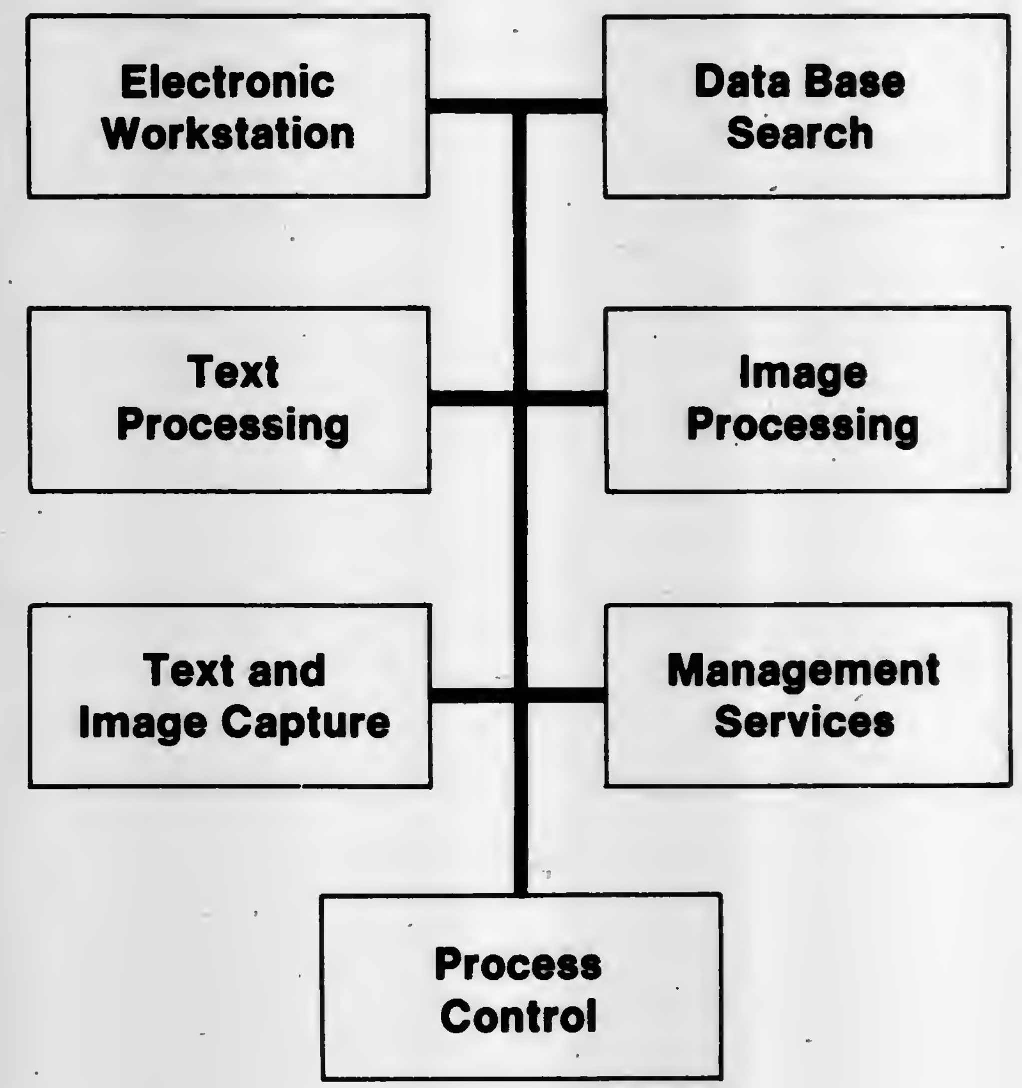

SYSTEM DEVELOPMENT APPROACH

Automated system capabilities required for future operations are extensive. Many are currently available off-the-shelf while others are just emerging. There is no single system available today, however, that will satisfy all requirements. With this in mind, the PTO has formulated the system development approach summarized below.

A preliminary technical concept of the system was formed by grouping capabilities into a small number of distinct, narrow-purpose categories. Existing technology and shelf components were matched with these categories to assess technical feasibility, to determine the magnitude of development still to be accomplished, and to develop preliminary schedule and cost estimates. While this assessment has established a technical concept, the architecture will undergo extensive refinement and extension during the next development phase.

A modular architecture is envisioned. The major components—the Electronic Workstation, User/Workstation Services, Data Base Search, Text Processing, Image Processing, Text and Image Capture, and Management Services—will be tied together by a Process Control and Network component. Each modular component will be developed or procured independently and integrated into the total system with minimal conflict. In addition, components may be replaced over time to take advantage of emerging technologies as they become commercially available and more cost effective, without disturbing other components.

In each component, a subset was identified for an initial operating capability to be achieved early in the system life cycle. Initial capabilities will be enriched and expanded during the second stage to establish an automated operation throughout the PTO. In the third stage, the system will be expanded to satisfy additional requirements and take advantage of technical and cost-beneficial opportunities. In this evolutionary approach, the technical objectives will be to establish component design features and interfaces and to retain maximum consistency in them throughout the life cycle. Off-the-shelf components will be used to the extent possible.

Life Cycle Strategy

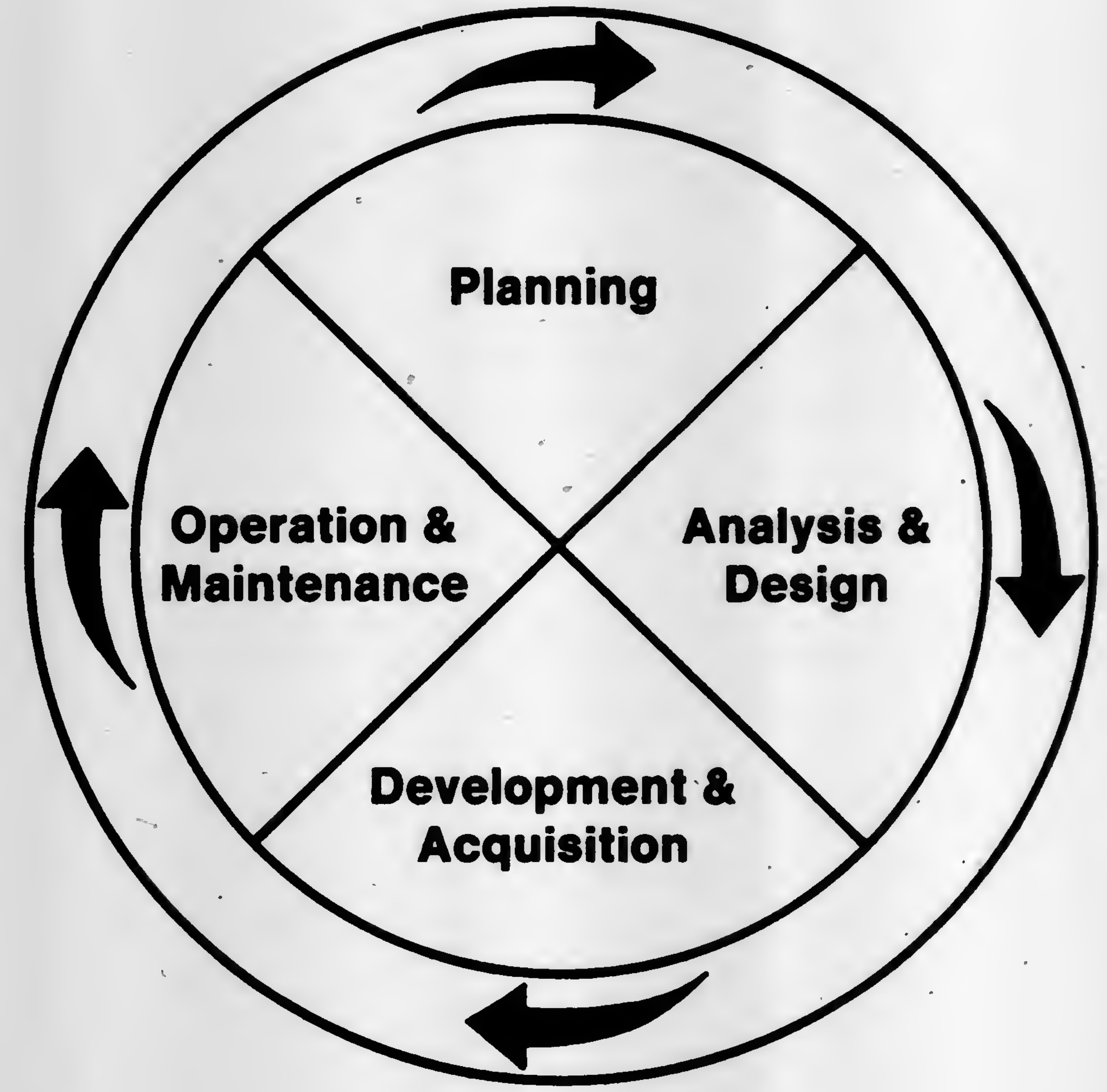

- Life Cycle Framework
- Development and Data Base Standards
- System Integration Contractor
- Maximum Competition for Independent Components
- Maximum Flexibility in Business Arrangements
- Integrated Development, Transition, & Conversion Plan
- Management Framework

LIFE CYCLE STRATEGY

The future system will be developed within the framework of system life cycle guidelines adapted from Federal Information Processing Standards to meet the particular needs of this undertaking. In this framework, the life cycle is subdivided into distinct phases, each of which has associated certain activities, end-products, and decisions. This structure will give better visibility to and control by program and executive management. A conventional system development is planned. It can be developed and integrated using technology, products, and services that are commercially available and does not warrant the time and cost of design competition step.

Use of life cycle guidelines implies the use of documentation and other standards to assist in quality assurance. PTO will adopt standards and guidelines necessary to carry out a comprehensive quality assurance program. The quality assurance program will independently test and evaluate development work and products as they occur or become available. The program will be broadened to include data and data base standards which are necessary for design and for minimizing transition and conversion conflicts.

A systems engineering contractor will be selected to work with the PTO throughout the design and development phases of the life cycle, to complete the system architecture and design, and to perform the critical job of component integration. In addition, the systems contractor will perform necessary design trade-off studies, develop component design and acquisition specifications, and assist in procurement of necessary components and/or services.

All acquisition actions will conform to federal procurement regulations to achieve maximum practical competition for products or services. In addition, maximum flexibility in business arrangements, for government or private sector ownership and/or operation, will be allowed to satisfy the objectives of OMB Circular A-76. Acquisitions will be conducted through a formal source selection process in which a technical evaluation board will be chaired by the PTO; membership will include the systems engineering contractor. An advisory board will be chaired by the PTO with membership overlapping the membership of the automation coordinating committee and including Department of Commerce (DoC) representation. The contracting officer(s) will be appointed by DoC. The source selection authority will be a PTO official.

The PTO will rely largely on a systems engineering contractor and commercially available products and services. Internal PTO staff will be used only where it is most effective or mandatory. PTO activities will include overall direction and oversight of the entire development process, systems analysis where required, quality assurance, data base administration, and system design control. Internal staff will continue the development and evolution of the management services component and operation and maintenance of current automated systems. They also will perform and/or manage data base conversion activities.

The plan summarized here and presented in detail in the supporting documents encompasses all of the PTO's automated system activities, current system maintenance and operation, future system development, and all activities necessary to make the transition from current operations to the future system. Maintaining a single, integrated automation master plan will help management focus on the total program and resolve priority issues that will arise.

The management organization for carrying out the PTO automation program has been established. It is composed of an automation coordinating committee, which reports to the Commissioner of Patents and Trademarks consisting of management representatives from the patent and trademark programs as well as supporting staff offices. Direct program responsibility has been assigned to an Administrator for Automation who reports to the Assistant Commissioner for Finance and Planning. Full implementation authority, including monitoring of all automation resources, has been centralized under the Administrator for Automation to allow single point direction of the program.

System Implementation Milestones

Operating Capabilities

Stage 1	Stage 2	Stage 3
Patents:	**Patents and Trademarks:**	**Patents and Trademarks:**
•Selected pre-examination processing	•All pre-examination processing	•Technology upgrades
•Single group examination processing	•All examination processing search	•Expanded public facilities
•Selected post-examination processing	•All post-examination processing	•Expanded telecommunications
•Selected Classification	•All Classification	•Extended dissemination support
Trademarks:	•Paperless search files—100% integrity	•Direct foreign data exchange
•All pre-examination processing	•Pilot paperless Public Search Room	
•All examination processing		
•All post-examination processing		
Management:	**Management:**	
•Current systems	•Fully integrated management information system	
1983-1984	**1985-1987**	**1988-1990**

SYSTEM IMPLEMENTATION MILESTONES

Under the current plan, the automation program would be attained in three stages. Initial operating capabilities, proposed to be implemented by the end of 1984, would include all basic components and necessary data bases. The Text and Image Capture component will accept and process data to be added to the electronic data bases. It is proposed that all data for both patent and trademark applications be converted to electronic and/or image form. Applications from Group 220, which is the first patent examining group selected for automation, and all of the trademark applications would be processed into the active data bases for use during this stage. A sub-set of the patent files and the entire trademark data base would be established. The Electronic Workstation and Workstation Services component would be implemented to allow each manager, examiner, and clerk to access the data bases using the Data Base Search components. This would be accomplished through a multipurpose workstation for all first stage users. Finally, operational capabilities would include a local communications network. Current management information support systems would be maintained and modified as necessary to accommodate changes resulting from initial operational capabilities.

After successful completion of stage one, system capabilities would be expanded during the subsequent three-year stage to support most internal PTO operations. The capability to capture, process, and maintain all application papers for all groups would be provided. Pre-examination and examination would be based on an automated operation. Search and retrieval of existing U.S. patents, foreign patents, non-patent literature, and commercial data bases will be totally automated. Post-examination processing and the capability to produce the necessary outputs for printing would be fully developed and integrated with the Management Services component. A pilot paperless public search room would be established.

During stage three, the final technology upgrades would be incorporated into the automated system. The public search facilities would be expanded and direct worldwide system access and data exchange would be possible. Public dissemination capabilities would be expanded to include access to the system through telecommunications from Patent Depository Libraries, for example.

The initial stage of development, which is defined in more detail at this time, is critical to maintaining the long-range schedule. The more significant milestones during this stage are the selection of the systems engineering contractor, refinement of the system architecture, specification of the initial operating components, and subsequent acquisition and installation of those components. Since most of these milestones are affected by external factors, they also carry the greatest risk of schedule slippage. Except for the acquisition of the system engineering contractor support, other concurrent procurements are projected on 12 to 18 month schedules. While the schedule for the first stage is ambitious, it is possible to achieve it with the strategy that has been outlined.

Initial Operating Capability Implementation Schedule

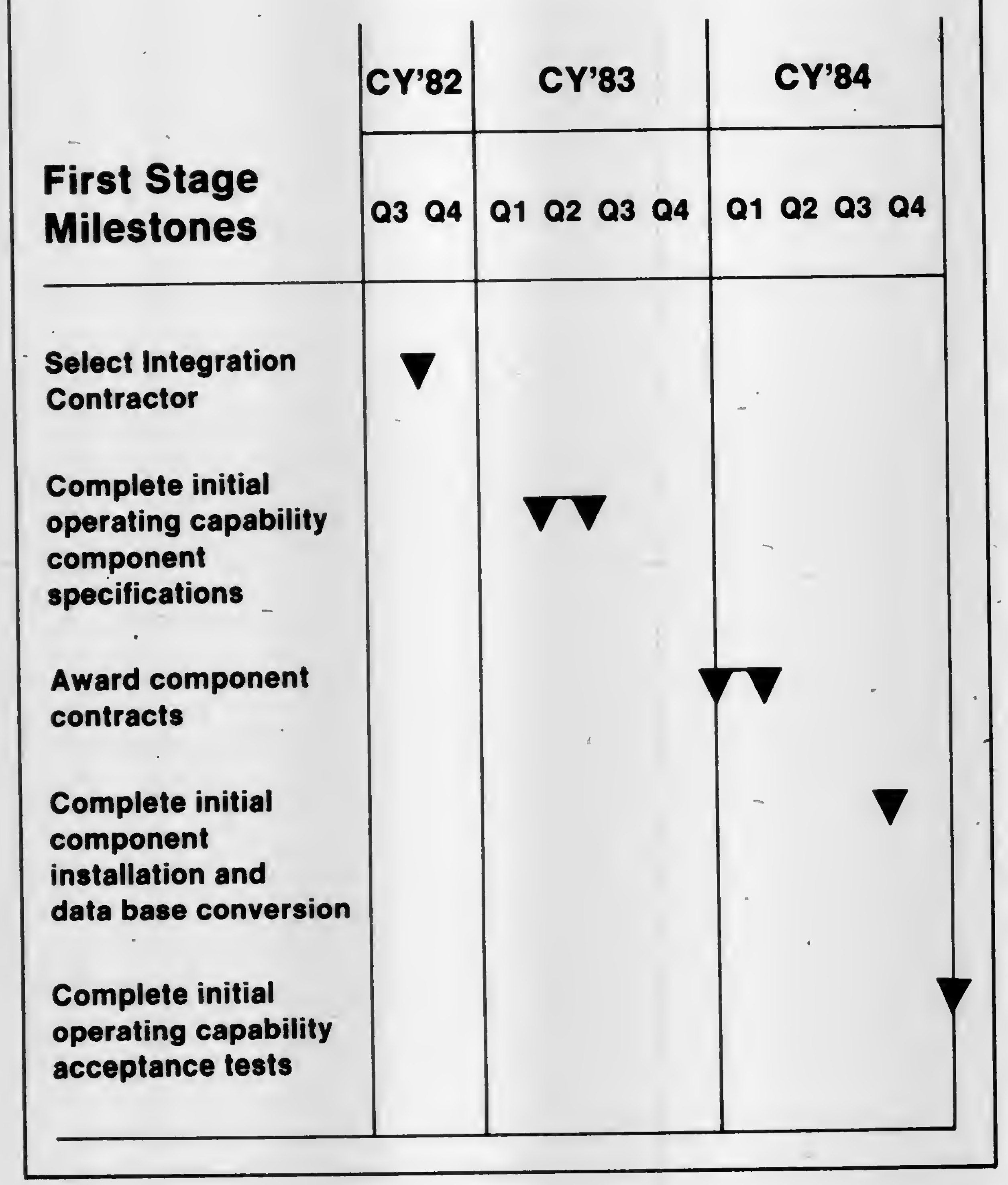

COST ESTIMATES

Total automation program costs are estimated to be over $300 million during the next eight years. The first stage of the long range program will amount to about $30 million—for fiscal years 83 and 84. About half of the latter represents base systems costs—equipment and personnel—which would be incurred even if there were no improvements. The remainder is for new components and development services.

While program costs accumulate to a high level during the eight-year development, they will be balanced by improvements in the quality of PTO operations and by cost benefits. Base systems costs, without the improvements that have been planned, would amount to almost $60 million over this period if continued at the current rate of more than $7 million a year. Preparation of material for printing, which costs almost $15 million annually, will be accomplished using the system and will offset much of the program costs over the system life, projected to run through the 1990's. Patent copy sales, patent classification and documentation, and other dissemination functions will also be supported with similar offsetting cost benefits. Other cost benefits will derive from personnel and space cost reductions or avoidances. In addition to these tangible benefits, which should at least balance the costs over the system life, the benefits of data base integrity, timely examination, and much improved public access, will yield intangible benefits that will far outweigh the costs. Cost estimates for the developmental period are summarized in the accompanying table.

As operational capabilities are developed, they will enter the operation and maintenance phase. Cost estimates were projected to include both new acquisition and operation/maintenance costs.

Cost Estimates by Major Categories
(In millions, 1982 Dollars)

Category	Stage 1	Stage 2	Stage 3
Workstations and Workstation Services	2.5	36.6	96.1
Text and Image Capture	1.7	22.9	3.1
Data Base Processing	2.1	20.2	39.2
Management Service	2.8	19.2	22.9
Network and Process Control	1.1	4.6	6.3
Engineering/Systems Integration	3.9	6.0	1.5
Current Systems and PTO Staff	14.7	19.4	14.7
TOTAL	28.8	128.9	183.8
PTO Offsets	14.7	125.7	182.2
Net Program Costs	14.1	3.2	1.6

Additional systems operating personnel costs were not included on the assumption that any increase would be more than offset by other personnel cost savings that will accrue from the system. Developmental costs will peak during the third stage and drop to an operating level after stage three is completed. As may be seen, workstations and associated workstation services will cost more than any other category of expense because of the projected large number of users. Data base processing, including search, electronic text and image processing, represent the next highest cost. The cost of data capture peaks during the second stage. Management services and network related processing peak in the third stage, then drop to a constant operating level. Current systems will be supplanted by the end of stage two, resulting in a decrease in costs in that category. Systems engineering and technical support services are projected to terminate during the first year of stage three.

SUMMARY

The plan summarized in the preceding pages is aimed at fully automating the PTO operations by 1990. It is built around the concept of automating operations with electronic text and computer accessible image data bases. All current functions and processes will be performed using electronic workstations and other automated system components.

Automation will be accomplished in three stages. During the first stage basic operational capabilities will be provided to automate one patent group and all trademark functions. Pre-examination, post-examination, classification, and management support will be automated also. During the second stage, all patent groups will be automated. The third stage will provide for worldwide electronic access and expanded dissemination capabilities.

The plan embodies a management strategy that has proven successful in large programs of this magnitude. Capabilities will be implemented incrementally. Modular components will be acquired in parallel and integrated with minimal conflict and risk to overall program schedules. A systems engineering contractor will be used to complete the system architecture, specify components, and accomplish system integration. The management approach centralizes responsibility and authority for the program and provides executive direction and guidance through an automation coordinating committee.

The first phase of this plan, which has been set in motion, will satisfy the Patent and Trademark Office mission needs for improved operations through automation.

Reference Collections of U.S. Patents Available for Public Use in Patent Depository Libraries

The libraries listed herein, designated as patent depository libraries, receive current issues of U.S. Patents and maintain collections of earlier issued patents. The scope of these collections varies from library to library, ranging from patents of only recent months or years in some libraries to all or most of the patents issued since 1870, or earlier, in other libraries.

These patent collections are open to public use and each of the patent depository libraries, in addition, offers the publications of the patent classification system (e.g. The Manual of Classification, Index to the U.S. Patent Classification, Classification Definitions, etc.) and provides technical staff assistance in their use to aid the public in gaining effective access to information contained in patents. With one exception, as noted in the table following, the collections are organized in patent number sequence.

Depending upon the library, the patents may be available in microfilm, in bound volumes of paper copies, or in some combination of both. Facilities for making paper copies from either microfilm in reader-printers or from the bound volumes in paper-to-paper copies are generally provided for a fee.

Owing to variations in the scope of patent collections among the patent depository libraries and in their hours of service to the public, anyone contemplating use of the patents at a particular library is advised to contact that library, in advance, about its collection and hours, so as to avert possible inconvenience.

State	*Name of Library*	*Telephone Contact*
Alabama	Birmingham Public Library	(205) 254-2555
Arizona	Tempe: Science Library, Arizona State University	(602) 965-7607
California	Los Angeles Public Library	(213) 626-7555 Ext. 273
	Sacramento: California State Library	(916) 322-4572
	Sunnyvale: Patent Information Clearinghouse*	(408) 738-5580
Colorado	Denver Public Library	(303) 571-2122
Delaware	Newark: University of Delaware	(302) 738-2238
Georgia	Atlanta: Price Gilbert Memorial Library, Georgia Institute of Technology	(404) 894-4508
Illinois	Chicago Public Library	(312) 269-2865
Louisiana	Baton Rouge: Troy H. Middleton Library, Louisiana State University	(504) 388-2570
Massachusetts	Boston Public Library	(617) 536-5400 Ext. 265
Michigan	Detroit Public Library	(313) 833-1450
Minnesota	Minneapolis Public Library & Information Center	(612) 372-6552
Missouri	Kansas City: Linda Hall Library	(816) 363-4600
	St. Louis Public Library	(314) 241-2288 Ext. 214, Ext. 215
Nebraska	Lincoln: University of Nebraska-Lincoln, Engineering Library	(402) 472-3411
New Hampshire	Durham: University of New Hampshire Library	(603) 862-1777
New Jersey	Newark Public Library	(201) 733-7814
New York	Albany: New York State Library	(518) 474-5125
	Buffalo and Erie County Public Library	(716) 856-7525 Ext. 267
	New York Public Library (The Research Libraries)	(212) 930-0850
North Carolina	Raleigh: D. H. Hill Library, N.C. State University	(919) 737-3280
Ohio	Cincinnati & Hamilton County, Public Library of	(513) 369-6936
	Cleveland Public Library	(216) 623-2870
	Columbus: Ohio State University Libraries	(614) 422-6286
	Toledo/Lucas County Public Library	(419) 255-7055 Ext. 212
Oklahoma	Stillwater: Oklahoma State University Library	(405) 624-6546
Pennsylvania	Philadelphia: Franklin Institute Library	(215) 448-1321**
	Pittsburgh: Carnegie Library of Pittsburgh	(412) 622-3138
	University Park: Pattee Library, Pennsylvania State University	(814) 865-4861
Rhode Island	Providence Public Library	(401) 521-7722 Ext. 226
South Carolina	Charleston: Medical University of South Carolina	(803) 792-2372
Tennessee	Memphis & Shelby County Public Library and Information Center	(901) 528-2957
Texas	Dallas Public Library	(214) 748-9071
	Houston: The Fondren Library, Rice University	(713) 527-8101 Ext. 2587
Washington	Seattle: Engineering Library, University of Washington	(206) 543-0740
Wisconsin	Madison: Kurt F. Wendt Engineering Library, University of Wisconsin	(608) 262-6845
	Milwaukee Public Library	(414) 278-3043

All of the above-listed libraries, except the Cleveland Public Library, offer CASSIS (Classification And Search Support Information System), which provides direct, on-line access to Patent and Trademark Office data.

*Collection organized by subject matter.

**Call only between the hours of 10:00 a.m. and 5:00 p.m.

PATENT EXAMINING CORPS

RENE D. TEGTMEYER, Assistant Commissioner

WILLIAM FELDMAN, Deputy Assistant Commissioner

CONDITION OF PATENT APPLICATIONS AS OF December 25, 1982

PATENT EXAMINING GROUPS	Actual Filing Date of Oldest New Case Awaiting Action
CHEMICAL EXAMINING GROUPS	
GENERAL CHEMISTRY AND PETROLEUM CHEMISTRY, GROUP 110—D. E. TALBERT, Director	11-12-80
Inorganic Compounds; Inorganic Compositions; Organo-Metal and Organo-Metalloid Chemistry; Metallurgy; Metallurgical Apparatus; Metal Stock; Electro Chemistry; Batteries; Hydrocarbons; Mineral Oil Technology; Lubricating Compositions; Gaseous Compositions; Fuel and Igniting Devices.	
GENERAL ORGANIC CHEMISTRY, GROUP 120—C. E. VAN HORN, Director	8-06-81
Heterocyclic Amides; Alkaloids; Azo; Sulfur; Misc. Esters; Carbohydrates; Herbicides; Poisons; Medicines; Cosmetics; Steroids; Oxo and Oxy; Quinones; Acids; Carboxylic Acid Esters; Acid Anhydrides; Acid Halides.	
HIGH POLYMER CHEMISTRY, PLASTICS AND MOLDING, GROUP 140—J. O. THOMAS, JR., Director	12-31-81
Synthetic Resins; Rubber; Proteins; Macromolecular Carbohydrates; Mixed Synthetic Resin Compositions; Synthetic Resins With Natural Polymers and Resins; Reclaiming; Pore-Forming; Compositions (Part) e.g., Coating; Molding; Ink; Prosthdontics; Adhesive and Abrading Compositions; Molding, Shaping, Treating Process, and Apparatus Therefor; Irradiation (Part); Bleaching; Dyeing; Leather, Fur and Textile Treating Compositions.	
COATING, LAMINATING AND PHOTOGRAPHY, GROUP 160—S. N. ZAHARNA, Director	1-15-82
Coating: Processes, Apparatus and Misc. Products; Laminating Methods and Apparatus; Stock Materials; Adhesive Bonding; Special Chemical Manufactures; Special Utility Compositions; and Photography.	
SPECIALIZED CHEMICAL INDUSTRIES AND CHEMICAL ENGINEERING, GROUP 170—R. F. WHITE, Director	10-30-81
Fertilizers; Foods; Fermentation; Analytical Chemistry; Reactors; Sugar and Starch; Paper Making; Glass Manufacture; Gas; Heating and Illuminating; Cleaning Processes; Liquid Purification; Distillation; Preserving; Liquid, Gas, and Solid Separation; Gas and Liquid Contact Apparatus; Refrigeration; Concentrative Evaporators; Mineral Oils Apparatus; Misc. Physical Processes.	
ELECTRICAL EXAMINING GROUPS	
INDUSTRIAL ELECTRONICS, PHYSICS AND RELATED ELEMENTS, GROUP 210—S. W. ENGLE, Director	2-13-81
Generation and Utilization; General Applications; Conversion and Distribution; Heating and Related Art Conductors; Switches; Photography; Motion Pictures; Horology; Acoustics; Recorders; Weighing Scales.	
SPECIAL LAWS ADMINISTRATION, GROUP 220—KENNETH L. CAGE, Director	3-20-81
Ordnance, Firearms and Ammunition; Lubrication; Illumination; Nuclear Reactors; Acoustics, Communications, Optics; Radar; Directional Radio; Torpedoes; Seismic Exploring; Cathode Ray Tube Circuitry; Cryptography; Laser Devices; Radioactive Materials; Powder Metallurgy, Rocket Fuels; Special, Fuel, Explosive and Thermic Compositions; Thermal and Photoelectric Batteries.	
INFORMATION TRANSMISSION, STORAGE, AND RETRIEVAL, GROUP 230—EARL LEVY, Director	11-24-80
Communications; Multiplexing Techniques; Television; Facsimile; Data Processing, Computation and Conversion; Storage Devices and Related Arts.	
RECEPTACLES, CLEANING, WINDING, AND MEASURING, GROUP 240—G. M. FORLENZA, Director	1-09-81
Receptacles; Bearings; Joint Packing; Conduits; Switches; Presses; Plumbing Fixtures; Textile Spinning; Cleaning; Food Treating; Agitating; Centrifugal Separating; Geometrical Instruments; Sound Recording; Image Projectors; Web Feeding; Winding and Reeling; Cable Hoists; Measuring and Testing; Indicating; Fluent Material Handling; Shaft; Impellers; Rotary Fluid Motors.	
ELECTRONIC COMPONENT SYSTEMS AND DEVICES, GROUP 250—S. S. MATTHEWS, Director	11-26-79
Semi-Conductor and Space Discharge Systems and Devices; Electronic Component Circuits; Wave Transmission Lines and Networks; Optics; Radiant Energy; Measuring.	
DESIGN, GROUP 290—KENNETH L. CAGE, Director	1-05-81
Industrial Arts; Household, Personal and Fine Arts.	
MECHANICAL EXAMINING GROUPS	
HANDLING AND TRANSPORTING MEDIA, GROUP 310—B. R. GRAY, Director	2-26-81
Conveyors; Hoists; Elevators; Article Handling Implements; Store Service; Sheet Feeding; Dispensing; Fluid Sprinkling; Fire Extinguishers; Coin Handling; Check Controlled Apparatus; Classifying and Assorting Solids; Boats; Ships; Aeronautics; Motor and Land Vehicles and Appurtenances; Brakes; Railways and Railway Equipment.	
MATERIAL SHAPING, ARTICLE MANUFACTURING, TOOLS, GROUP 320—M. M. NEWMAN, Director	4-20-81
Manufacturing Processes, Assembling, Combined Machines, Special Article Making; Metal Deforming; Sheet Metal and Wire Working; Metal Fusion-Bonding, Metal Founding; Machine Tools for Shaping or Dividing; Work and Tool Holders, Woodworking; Tools; Cutlery; Jacks; Fishing, Etc.; Butchering; and Books and Printed Matter.	
AMUSEMENT, HUSBANDRY, PERSONAL TREATMENT, INFORMATION, GROUP 330—R. E. AEGERTER, Director	2-13-80
Amusement and Exercising Devices; Projectors; Animal and Plant Husbandry; Plants; Harvesting; Earth Working and Excavating; Tobacco; Artificial Body Members; Dentistry; Jewelry; Surgery; Toiletry; Printing; Typewriters; Information Dissemination.	
HEAT, POWER, AND FLUID ENGINEERING, GROUP 340—D. J. STOCKING, Director	11-17-80
Power Plants; Combustion Engines; Fluid Motors; Reaction Motors; Pumps; Rotary Engines and Pumps; Heat Generation and Exchange; Refrigeration; Ventilation; Drying; Temperature and Humidity Regulation; Couplings; Gearing; Fluid Handling and Control; Lubrication.	
GENERAL CONSTRUCTIONS, TEXTILES, MINING AND GEARING, GROUP 350—A. L. SMITH, Director	9-17-80
Building Structures; Racks; Cabinets; Closures; Supports; Furniture; Fasteners; Locks; Pipe Couplings; Joints; Miscellaneous Hardware; Textiles; Sewing Machines; Apparel; Footwear; Earth Engineering; Earth Drilling; Mining; Wells; Roads; Bridges; Tool Driving; Gearing; Machine Elements; Clutches.	

Expiration of patents: The patents within the range of numbers indicated below expire during December 1982, except those which may have expired earlier due to shortened terms under the provisions of Public Law 690, 79th Congress, approved August 8, 1946 (60 Stat. 940) and Public Law 619, 83rd Congress, approved August 23, 1954 (68 Stat. 764), or which may have had their terms curtailed by disclaimer under the provisions of 35 U.S.C. 253. Other patents, issued after the dates of the range of numbers indicated below, may have expired before the full term of 17 years for the same reasons, or have lapsed under the provisions of 35 U.S.C. 151.

Patents . . . . Numbers 3,221,339 to 3,226,728, inclusive

Plant Patents . . . . Numbers 2,577 to 2,584 inclusive

REEXAMINATIONS

February 8, 1983

Matter enclosed in heavy brackets [ ] appears in the patent but forms no part of this reexamination specification; matter printed in italics indicates additions made by reexamination

B1 4,251,727 (52nd)
GAS DETECTION

David R. Piercy, Wareham, England, assignor to J. & S. Sieger Limited, Poole, England.

Reexamination Request No. 90/000,136, Jan. 11, 1982.
Reexamination Certificate for Patent No. 4,251,727, issued Feb. 17, 1981, Ser. No. 42,153, May 24, 1979
U.S. Cl. 250/343 **Int. Cl.³ G01N 21/26**

AS A RESULT OF REEXAMINATION, IT HAS BEEN DETERMINED THAT:

Claims 1-5, having been finally determined to be unpatentable, are cancelled.

Claims 6 and 7 are determined to be patentable as amended:

New claims 8-13 are added and determined to be patentable.

6. A process for detecting *and continuously monitoring* gases by absorption of infra-red radiation which comprises *the following steps:*

moving, in turn, at least two of a plurality of cells including at least one *enclosed* sample cell and at least one reference cell into [the] *an* optical path between a source of infra-red radiation and an infra-red detector so that infra-red radiation passes through the cell from said source to said detector [.]*;*

comparing the infra-red radiation received by said detector when one of said at least two cells is positioned in said optical path electronically with the infra-red radition received by the detector when said at least one other cell is positioned in said optical path and producing a signal dependent on said comparison [, said cell being housed]*;*

housing said cells in an enclosure into which an atmosphere to be tested is passed [,]*;*

pumping said atmosphere *through apertures in said enclosed sample cell facing generally along the path of movement of the sample cell* [being pumped into at least one of said at least two cells] by the motion of

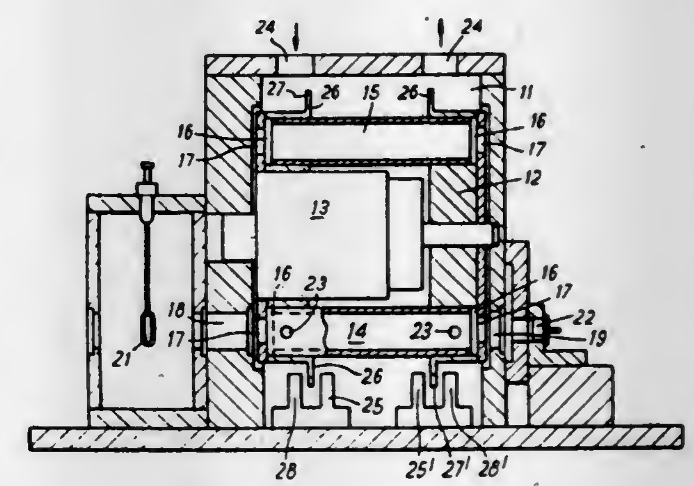

said *sample* cell through said enclosure from a position outside said optical path to a position in said optical path [.], *said cells having a length extending substantially along the entire optical path from said source of infra-red radiation to said infra-red detector;*

detecting and continuously monitoring said atmosphere pumped within said enclosed object sample cell.

REISSUES

FEBRUARY 8, 1983

Matter enclosed in heavy brackets [ ] appears in the original patent but forms no part of this reissue specification; matter printed in italics indicates additions made by reissue.

Re. 31,140

SOCKET WRENCH WITH INTERCHANGEABLE SOCKETS STORED IN HANDLE

Werner W. Martinmaa, 3461 Cashill Blvd., Reno, Nev. 89509

Original No. 4,253,356, dated Mar. 3, 1981, Ser. No. 73,966, Sep. 10, 1979. Continuation of Ser. No. 909,103, May 24, 1978, abandoned. Application for reissue Jul. 17, 1981, Ser. No. 284,382

Int. Cl.³ B25G *1/08*

U.S. Cl. 81—177 N **30 Claims**

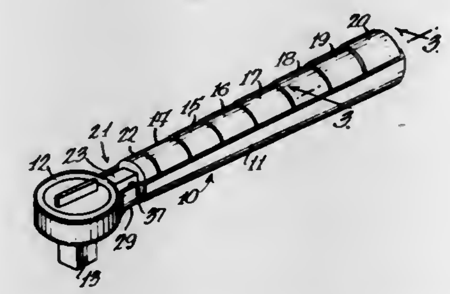

26. Socket member storage means for a set of interchangeable sockets for a socket wrench of the type which has a head with a socket mounting stub, said storage means comprising:

a longitudinal wall defining a long, narrow cavity which has an entrance opening along one side, said cavity having several portions disposed therealong in tandem, each of which portions receives and separately retains one socket member of a set, and each portion of the cavity including means permitting the socket member in said portion to be removed therefrom through the entrance opening without disturbing any other socket member.

Re. 31,141

WINDOW SHADE, CURTAIN, OR DRAPERY ROD CORNER BRACKET

Bernard E. Bartels, 621 SE. 15th Ave., Apt. 101, Boynton Beach, Fla. 33435

Original No. 4,167,261, dated Sep. 11, 1979, Ser. No. 889,555, Apr. 17, 1978. Application for reissue Jan. 16, 1980, Ser. No. 114,792

Int. Cl.³ A47H *1/10*

U.S. Cl. 248—270 **4 Claims**

1. A [ribbed], self-positioning corner bracket eliminating measuring during mounting for use in mounting a window covering upon a mounting bracket, comprising:

a substantially planar inverted L-shaped mounting plate adapted to be secured on a surface near a corner of a window opening;

at least one laterally extending flange generally perpendicular to said mounting plate attached to an edge of said mounting plate for locating said mounting plate in the corner of said window opening precluding measuring of said mounting bracket; and

a plurality of preformed holes and adjusting slots in vertical and horizontal arrays in said mounting plate for receiving and locating a mounting bracket for a window covering.

Re. 31,142

ELECTRICAL TAB RECEPTACLE

Reginald J. Simmons, South Harrow, England, assignor to AMP Incorporated, Harrisburg, Pa.

Reissued No. Re. 30,277, dated May 20, 1980, Ser. No. 876,584, Feb. 10, 1978.

Original No. 3,976,348, dated Aug. 24, 1976, Ser. No. 572,500, Apr. 28, 1975. Application for reissue Nov. 20, 1980, Ser. No. 208,714

Claims priority, application United Kingdom, May 3, 1974, 19542/74

Int. Cl.³ H01R *13/62*

U.S. Cl. 339—74 R **18 Claims**

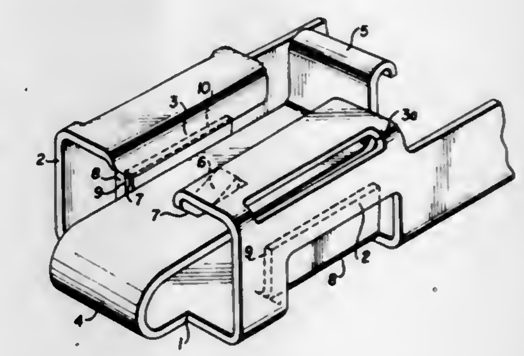

2. In combination, an electrical tab receptacle formed from sheet metal and comprising a generally channel-shaped receptacle portion having a base and upstanding side walls with free edge portions of the side walls turned in over the base for receiving a complementary tab between the base and the turned-in edges of the side walls, the base of the receptacle being formed with an outwardly and rearwardly directed lance, and an integral tongue extending from the base at the forward, tab-entry end of the receptacle portion, the tongue extending rearwardly in inclined manner towards the turned-in edges of the side walls, the free end of the tongue at the rearward end of the receptacle portion projecting rearwardly beyond the turned-in edges of the side walls, said tongue being turned outwards away from said base and projecting externally of said receptacle portion, and the tongue within the receptacle portion being formed in a middle portion with a lance inclined rearwardly from the tongue towards the turned-in edges of the side walls and arranged and adapted to engage a corresponding recess or aperture in a complementary tab when mated with the receptacle for latching the tab against withdrawal from the receptacle, and an insulating housing in which the receptacle is secured, a base of the housing being formed with a shoulder which is engaged by the lance on the base of the receptacle when the receptacle tends to move in one axial direction relative to the housing, and an upper wall of the housing being formed with a depending wall which prevents insertion of a complementary tab between the receptacle and the upper wall of the housing, and which is engaged by the turned-in edge portions of the side walls of the receptacle when the receptacle tends to move in the other axial direction relative to the housing, the upper wall of the housing being formed with a flexible portion which can be depressed to contact the free end of the tongue of the receptacle thereby to depress the tongue and release the lance on the tongue from a complementary tab mated with the receptacle.

Re. 31,143
MEASUREMENT SYSTEM

Morton Kaye, deceased, late of Stamford, Conn., and by Sylvia Kaye, executrix, 122 Third St., Stamford, Conn. 06905
Original No. 4,113,389, dated Sep. 12, 1978, Ser. No. 678,059, Apr. 19, 1976. Application for reissue Jan. 28, 1980, Ser. No. 115,919

Int. Cl.[3] **G01B** *11/06, 9/08, 11/30*

U.S. Cl. 356—381 **1 Claim**

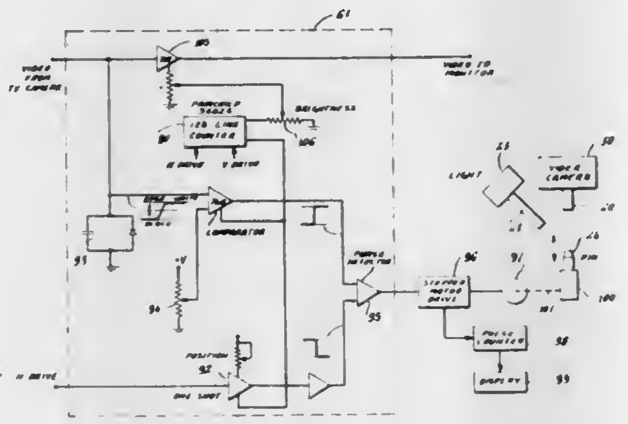

9. [The system of claim 8] *A system for determining a dimension of an object comprising means focusing an image in visible light and having a light dark transition on said object, means for optically scanning said image to produce a video signal, whereby an inflection occurs in a given line of said video signal at a time corresponding to said transition, means for adjusting the position of object until said inflection occurs at a reference point in said given line, and means for indicating the amount of said adjustment to determine said dimension, said means for optically scanning comprising a television camera, and said means for adjusting comprising micrometer means positioned to move said object along the optical axis of said television camera, said system* further comprising a source of a reference signal occurring at a determined time after the beginning of said given line, means comparing the phase of said reference signal with said inflection of said video signal to produce a control signal, and means responsive to said control signal for adjusting said micrometer means in a direction to reduce the time difference between said inflection and said reference signal.

Re. 31,144
MULTI-STATION TELEPHONE SWITCHING SYSTEM

Thomas E. Fell, New York, N.Y., assignor to Interconnect Planning Corporation, New York, N.Y.
Original No. 3,991,282, dated Nov. 9, 1976, Ser. No. 536,838, Dec. 27, 1974. Application for reissue May 13, 1981, Ser. No. 263,208

Int. Cl.[3] **H04M** *1/72*

U.S. Cl. 179—99 LS **9 Claims**

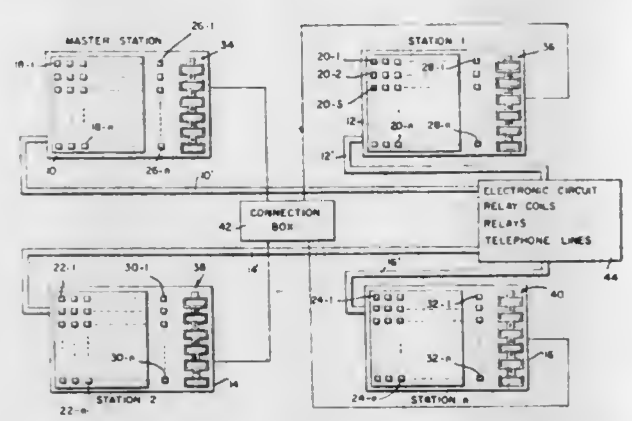

1. For a telephone system in which telephone communication is capable of being established for each telephone station of a plurality of telephone stations over a standard telephone line by directly connecting each telephone station to a selected standard telephone line of a plurality of standard telephone lines, each of said plurality of standard telephone lines capable of being directly connected to each of said plurality of telephone stations, an improvement comprising:

a plurality of pairs of contacts, with respective pairs of said contacts being connected with respective ones of said standard telephone lines for allowing said communication;

a plurality of relay coils, with respective ones of said relay coils controlling respective pairs of said contacts to be opened or closed;

a plurality of sets of *non-locking* pushbutton [switch means] *switches* with each set of pushbutton [switch means] *switches* connected to respective ones of said telephone stations with respective ones of said pushbutton [switch means] *switches* of said sets of pushbutton [switch means] *switches* corresponding to respective ones of said standard telephone lines and being connected with a respective ones of said relay coils and being depressed for energizing a selected one of said relay coils for closing a corresponding pair of contacts to allow said telephone communication; [and]

an electronic holding circuit for each of said relay coils, said holding circuits being operative

to establish a held state after initial energization of the associated relay coil by momentarily depressing the associated pushbutton switch, and

to maintain said corresponding pair of contacts closed while in the held state;

a logic circuit for each station connected to said holding circuits to detect conditions for releasing the held state;

each of said stations comprising [first light display means] *a set of status lights,* connection means connecting corresponding pushbuttons of said sets of pushbutton [switch means] *switches* in each of said stations and to said [first light display means] *status lights* for energizing said [first light display means] *status lights* in each station to display the status of each of said plurality of standard telephone lines in each of said stations,

said station further comprising [second light display means] *an active line indicator separate from said status lights* connected to said pushbutton [switch means] *switches* for identifying the standard telephone line *of said plurality of standard telephone lines* that the telephone station is using for said telephone communication.

Re. 31,145
INTERRUPTABLE SIGNAL GENERATOR

Merlin D. Bjorke, Minneapolis, Minn., assignor to Honeywell Inc., Minneapolis, Minn.
Original No. 4,262,222, dated Apr. 14, 1981, Ser. No. 968,534, Dec. 11, 1978. Application for reissue Jan. 6, 1982, Ser. No. 337,217

Int. Cl.[3] **H03K** *17/28, 5/00*

U.S. Cl. 307—608 **6 Claims**

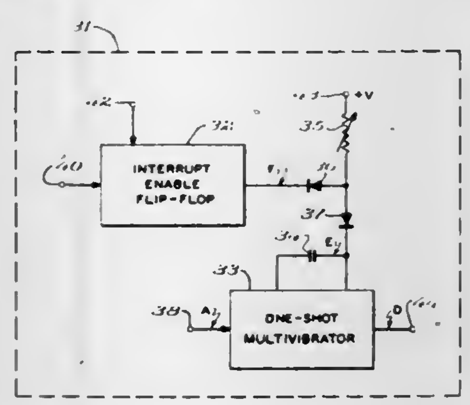

1. An interruptable signal generator comprising:

first means having an input connected to receive a trigger signal and an output for generating an output signal which includes a timing cycle of a fixed known duration, the first means being responsive to the trigger signal for initiating the timing cycle, the output signal beginning in timed relation to the start pulse and terminating in timed relation to the end of the timing cycle; and

second means connected to the first means for *randomly* interrupting the timing cycle [for an indefinite period] *for up to an indefinite period,* the interruption [being] *beginning* in timed relation to an interrupt signal edge, and for reestablishing the timing cycle in timed relation to a reset signal edge, thus permitting the timing cycle to continue, the second means being connected to receive the interrupt and reset signal edges.

Re. 31,146
TWO-WIRE BALLAST FOR FLUORESCENT TUBE DIMMING

Zoltan L. Gyursanszky, Don Mills, Canada, assignor to Honeywell Ltd., Canada
Original No. 4,163,925, dated Aug. 7, 1979, Ser. No. 875,478, Feb. 6, 1978. Application for reissue Mar. 2, 1981, Ser. No. 239,709

Claims priority, application Canada, Apr. 21, 1977, 276641

Int. Cl.[3] **H05B** *41/38, 41/20*

U.S. Cl. 315—276 **14 Claims**

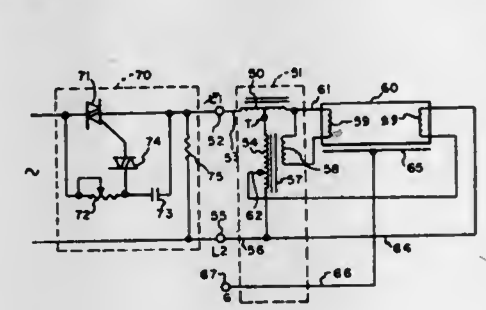

1. A ballast for a fluorescent tube dimming arrangement comprising:

first and second terminals adapted to be connected to a source of variable power;

an inductive coil connected to said first terminal and adapted to be connected to a fluorescent tube; and,

a transformer having a primary winding, said primary winding having a first end connected to a tap on said inductive coil selected so that, as the power supplied to said fluorescent tube is varied for dimming, the voltage across said primary winding remains substantially constant, and a second end connected to said second terminal, said transformer further having first and second secondary windings for supplying filament voltage to said fluorescent tube.

Re. 31,147
GROUND FAULT AND FIRE DETECTOR SYSTEM

William F. Helwig, Jr., Downers Grove, and Henry D. Jeffries, Jr., Naperville, both of Ill., assignors to Avtec Industries, Inc., Downers Grove, Ill.
Original No. 4,163,269, dated Jul. 31, 1979, Ser. No. 794,356, May 6, 1977. Application for reissue Jul. 31, 1981, Ser. No. 289,078

Int. Cl.[3] **H02H** *3/16*

U.S. Cl. 361—42 **10 Claims**

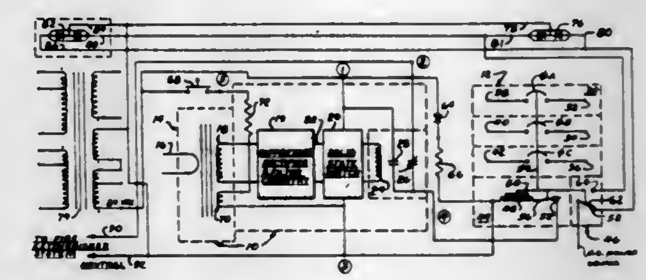

1. A ground fault and fire detector system for an A.C. electrical power distribution apparatus comprising:

circuit interrupter means having at least one pole for disconnecting an electrical load power supply from at least one load;

single-pole circuit means operatively connected to said interrupter means for controlling said interrupter means;

said single-pole means being operable to disconnect a power supply from a load upon being activated by separate sources of electrical power being imposed thereon in response to detection of a ground fault or detection of fire, respectively;

ground fault sensing means operatively positioned with respect to at least one wire for detecting a ground fault current;

said sensing means being interposed between the single-pole circuit means and a ground fault electrical power supply of less than 120 volts to control the power from the ground fault electrical power supply to the single-pole circuit means;

said sensing means including relay means responsive to detection of a ground fault current to electrically couple said ground fault power supply to the single-pole means for disconnecting said electrical load power supply from at least one load; and

said single-pole circuit means being further coupled to a fire extinguish system to supply power from a fire system electrical power supply [of at least 120 volts A.C.] to the single-pole circuit means for activating said interrupter means upon occurrence of a fire independently of said ground fault sensing means to disconnect said electrical load power supply from at least one load.

PLANT PATENTS

GRANTED FEBRUARY 8, 1983

Illustrations for plant patents are usually in color and therefore it is not practicable to reproduce the drawing.

4,980

PEACH TREE

Thomas O. Chamberlin, Sr., Visalia, Calif., assignor to H. P. Metzler & Sons, Inc., Del Rey, Calif.

Filed Aug. 13, 1981, Ser. No. 292,694

Int. Cl.^{3} A01H *5/03*

U.S. Cl. Plt.—43 **1 Claim**

1. A new and distinct variety of peach tree substantially as illustrated and described and which is characterized by regular and good bearing of early ripening, medium size, semi-freestone, yellow-fleshed fruit having flesh of a very smooth and tight texture ripening quite evenly throughout the fruit in that the apex normally does not soften before the base of the fruit is ripe; and ripening about 6 days after the unpatented Springcrest peach tree.

4,981

CARNATION PLANT

Walter H. Jessel, Jr., Fremont, and William E. Duffett, Salinas, both of Calif., assignors to Yoder Brothers, Inc., Barberton, Ohio

Filed Jun. 10, 1981, Ser. No. 272,375

Int. Cl.^{3} A01H *5/00*

U.S. Cl. Plt.—73 **1 Claim**

1. A new and distinct cultivar of *Dianthus caryophyllus*, L. known by the cultivar name Jack, as described and illustrated, and particularly characterized as to uniqueness by the combined characteristics of commercial double flower type; flat flower form, twisting slightly with maturity; medium flower size, red flower color with minimum color oxidation; medium flowering response; 4 to 7 flowers and buds showing color per flowering stem; medium peduncle length; strong peduncle strength; and medium plant height.

PATENTS

GRANTED FEB. 8, 1983

ERRATA

For CLASS	See PATENT NO.
297–047	4,372,041
114–244	4,372,359
494–016	4,372,483
494–014	4,372,484
384–094	4,372,624
384–129	4,372,625
384–129	4,372,626
384–260	4,372,627
436–537	4,372,745
436–066	4,372,746
436–067	4,372,747
436–073	4,372,748
376–417	4,372,817
436–176	4,372,874
260–453	4,372,877
548–468	4,372,887
377–008	4,373,135

PATENTS

GRANTED FEBRUARY 8, 1983

GENERAL AND MECHANICAL

4,371,983
WEIGHT ATTACHMENT FOR BASEBALL GLOVE
Joseph J. Piotti, Jr., 1625 Logan Ave., Rear, Altoona, Pa. 16602
Filed Dec. 31, 1980, Ser. No. 221,914
Int. Cl.³ A41D *13/08, 19/00*
U.S. Cl. 2—19 **7 Claims**

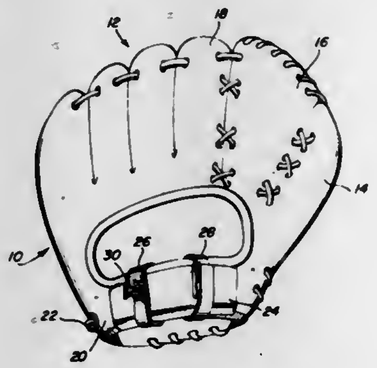

1. A baseball fielder's glove useful during training to increase the strength, quickness and agility of a ball player's fielding hand through continued use, the baseball fielder's glove comprising a wrist strap included integrally with a back portion of said baseball fielder's glove for retaining the glove on the user's hand, a weight comprised of metal material, and fastener means securing the weight on the wrist strap, said fastener means including layer material at least partially encompassing the weight and the wrist strap.

4,371,984
PALM GUARD
Gary P. Fowler, Tennant Star Rte., Box 93, Macdoel, Calif. 96058
Filed Apr. 28, 1981, Ser. No. 258,411
Int. Cl.³ A41B *13/00*
U.S. Cl. 2—20 **7 Claims**

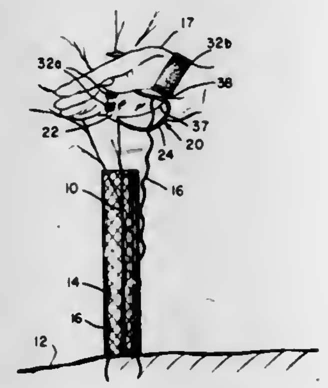

1. A palm guard for use in manually inserting a stake in the ground comprising a base, means for enabling said base to be held by a user's hand, and a rim secured to said base and forming therewith a pocket for receiving an end of the stake.

4,371,985
CONICAL BLADDER
Naum Pokhis, 1850 N. Whitley Ave., Apt. 317, Hollywood, Calif. 90028
Filed May 6, 1980, Ser. No. 147,110
Int. Cl.³ A41D *13/06*
U.S. Cl. 2—22 **7 Claims**

1. A device for facilitating squating and kneeling, comprising
an inflatable bladder arranged to be located on a rear surface of a user's leg below a knee bend and movable between an operative position in which it is inflated and assumes a conical shape decreasing from a lower part of the user's leg to the leg bend in correspondence with a space between a user's calf and a user's thigh in squating or kneeling position so that a user's body is supported on thus

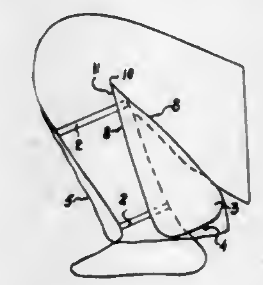

inflated bladder while squating or kneeling, and an inoperative position in which said bladder is also located in the same region but is deflated and assumes a substantially flat shape so as not to disturb the user; and
means for mounting said bladder in said region.

4,371,986
DISPOSABLE GARMENT
Cynthia A. Wichman, St. Charles, Ill., assignor to The Kendall Company, Boston, Mass.
Filed Apr. 22, 1982, Ser. No. 370,871
Int. Cl.³ A41B *13/10*
U.S. Cl. 2—051 **9 Claims**

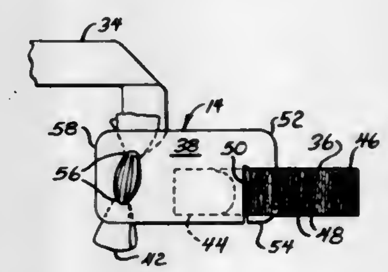

1. A disposable garment, comprising:
a gown having a pair of sleeves, a front, and a pair of side margins defining an open back for the gown;
a first belt having one end secured to the gown and the other end being free;
a second belt having one end secured to the gown; and
a transfer card having a slit, and means for releasably attaching the other end of the first belt to the card, with the card slit being received on the second belt to hold the card in place on the gown.

4,371,987
LATEX GLOVE
Bernard M. Brasfield, Arlington, Tex., assignor to Surgikos, Inc., Arlington, Tex.
Filed Mar. 12, 1980, Ser. No. 129,543
Int. Cl.³ A41D *19/00*
U.S. Cl. 2—162 **3 Claims**

1. An elastomeric glove having a hand portion and a wrist portion, one end of the wrist portion having an opening in which the hand is inserted into the glove, a bead at the free open end of the wrist portion of the glove, the bead having a

plurality of densely rolled segments of elastomer around the circumference at the open end of the glove, each of the densely

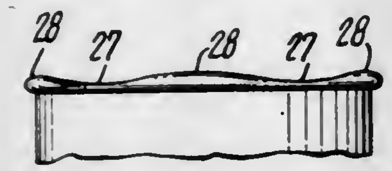

rolled segments being separated from the next adjacent densely rolled segment by a loosely rolled segment of the bead.

4,371,988
GLOVES AND A METHOD OF MAKING THEREOF
Francis T. Berend, Boulogne-sur-Seine, France, assignor to Societe Anonyme Parinter, France
Division of Ser. No. 78,661, Sep. 24, 1979, Pat. No. 4,272,568, which is a continuation of Ser. No. 844,465, Oct. 1, 1977, abandoned. This application Oct. 14, 1980, Ser. No. 196,293
Claims priority, application France, Oct. 22, 1976, 76 31870
Int. Cl.³ A41D *19/00*
U.S. Cl. 2—167 **2 Claims**

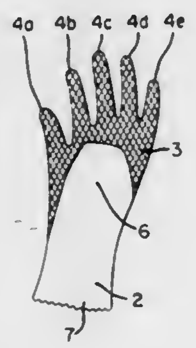

1. A protective glove comprising, a flexible inner lining made of a fabric having externally thereon a flexible, protective two-layer coating based on plasticized polyvinyl, the coating being characterized by a first inner layer applied externally over the entire lining and having high mechanical and physical strength, a second outer layer bonded to the inner layer partly covering the inner layer and having a high resistance to chemical attack, the outer layer covering entirely only the backsides and frontsides of the five fingers of the glove and the palm thereof constituting gripping areas used for gripping articles, the backside of the glove being free of said outer layer, whereby the gripping areas simultaneously are flexible, have high mechanical and physical strength and are highly resistant to chemicals.

4,371,989
SEAMLESS CROTCH
Bernice Polsky, 139 N. Clark Dr., Beverly Hills, Calif. 90211
Filed Dec. 29, 1980, Ser. No. 221,318
Int. Cl.³ A41D *1/06;* **A41B** *9/04*
U.S. Cl. 2—227 **6 Claims**

1. A pants-like garment having leg portions and a trunk portion comprising:
a front piece having a trunk area and legs, the inside edges of said legs forming an inverted V and meeting said trunk area at a front piece crotch point;
a rear piece having a trunk area and legs, the inside edges of said legs forming an inverted V and meeting said trunk area at a rear piece crotch point; and
a generally diamond-shaped crotch piece having concave edges and made of a stretchable material, said crotch piece having a front and a back portion terminating in a first and second point opposite to each other, said first and second points defining a crotch axis, and having long tapering leg portions terminating in third and fourth points opposite to each other, said third and fourth points defining a longitudinal axis, said longitudinal axis being at least twice as long as said crotch axis and intersecting said crotch axis at a point closer to said first point than to said second point, said crotch piece being stretchable along said crotch axis, said first point being joined to said front piece at said front piece crotch point, said second point being joined to said rear piece at said rear piece crotch point, said edges of said crotch piece adjacent said first point each being joined to an inside edge of said legs of said front piece, said edges of said crotch piece adjacent said second point each being

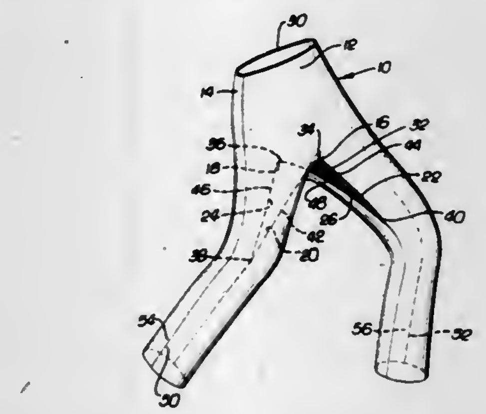

joined to an inside edge of said legs of said rear piece, said inside edges of said legs of said front and rear pieces being joined together at said third and fourth points of said crotch piece and along their lengths to their bottoms, said front piece and said rear piece being joined together at the outside edges of said legs and trunk areas along their lengths, thereby forming a pants-like garment which conforms to the contours of the body in the trunk and upper leg areas, whereby said front and rear pieces cooperate with said crotch piece to pull said crotch piece away from the crotch area of a person when one leg of said person pulls on said garment.

4,371,990
THIGH PROSTHESIS
Lamberto Staffieri, 38069-Torbole sul Garda (Trento), Via Matteotti, 28, Italy
Continuation-in-part of Ser. No. 112,763, Jan. 17, 1980, Pat. No. 4,268,923. This application Jan. 16, 1980, Ser. No. 159,710
Claims priority, application Italy, Jan. 18, 1979, 82201 A/79
Int. Cl.³ A61F *1/04, 1/08*
U.S. Cl. 3—28 **10 Claims**

1. In a thigh prosthesis or artificial leg having a socket portion designed to receive and be secured, in use, to an amputee's stump, a shin portion, and an articulation frame joining the socket portion to the shin portion, and resilient means for limiting and cushioning articulation movements of the said articulation frame, the improvement wherein the articulation frame is adapted sequentially to lengthen the prosthesis during an active deambulation phase and to shorten it during a passive deambulation phase and comprises yieldingly resisting means arranged to control extension and shortening movements of the said articulation frame.

4,371,991
CLEAN-OUT TOOL FOR SINKS AND THE LIKE
Steve Schrott, 3269 Blue Rock Rd., Cincinnati, Ohio 45239
Filed Jul. 18, 1979, Ser. No. 58,515
Int. Cl.³ F16K *9/00*
U.S. Cl. 4—255 **6 Claims**

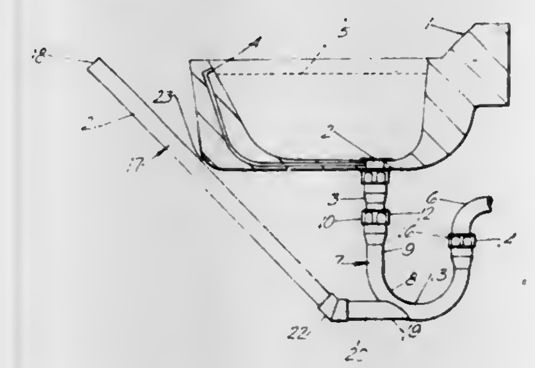

1. In a tubular sink trap having a vertical leg section, means terminating the upper end of said leg section for connecting said trap to the lower end of a sink tail piece depending downwardly from a sink, an arcuate portion attached to the lower end of said leg section to form a generally U-shaped trap section, and means terminating the distal end of said arcuate portion for connecting said trap section to a waste drain outlet, the improvement in combination therewith comprising clean-out means for introducing a plumber's snake into said trap including a substantially straight tubular branch member extending horizontally outwardly from and positioned substantially co-axially with the lowermost part of said arcuate portion, an extension member comprising an upwardly extending tubular pipe having an open upper end configured to receive a plumber's snake, the lower end of the extension member extending substantially co-axially with said branch member, the extension member being dimensioned so that the upper end of the extension member extends at least to the overflow level of the sink, and means terminating the open end of said branch member for attaching the extension member thereto, the lower end of said extension member being slip-fitted within said branch member, the lower end of said extension member extending beyond said vertical leg section and containing an aperture in the upper wall of said lower end to permit flow of waste water from said vertical leg section to said arcuate portion.

4,371,992
WATER FEEDER CONSERVATION TANK
Alfredo Rivera, 1266 Olmstead Ave., Apt. 2-F, Bronx, N.Y. 10462
Filed Sep. 4, 1981, Ser. No. 299,598
Int. Cl.³ E03D *1/00*
U.S. Cl. 4—353 **2 Claims**

1. A water feeder conservation tank, comprising, in combination, a tank member on a table and installed over a conventional toilet tank of a toilet, a drain pipe through a bottom wall of said tank member extending downward into said toilet tank, a hinged cover on a top of said tank member, an air-tight gasket between the edges of said cover and the edges of an opening in said tank member top and a float ball mechanism on a top of said drain pipe; said float ball mechanism being controlled by a chain attached to said hinged cover, a tension spring intercepting said chain, said float ball mechanism comprising a float ball receivable over a top opening of said drain pipe, said float ball being on one end of a rocker arm centrally pivotable about a stationary pin of a bracket installed upon said tank member

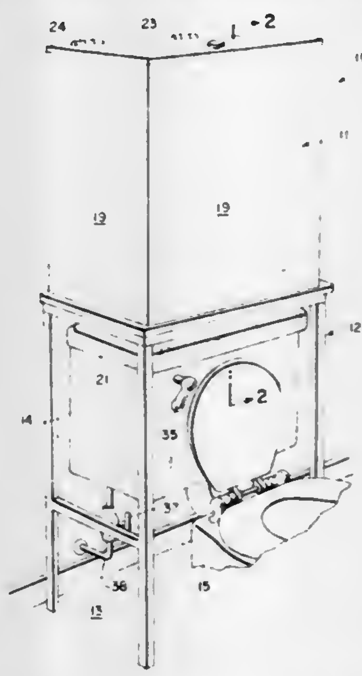

bottom wall while said chain is attached to an opposite end of said rocker arm so that said float ball is urged against said drain pipe by said spring when cover is upwardly pivoted, thereby preventing any water from entering said drain pipe while said cover is in an upwardly opened position.

4,371,993
BIDET ALTERNATIVE APPARATUS
Billy J. Patrick, Rte. 2, Sulphur, Okla. 73086
Filed Jan. 29, 1981, Ser. No. 229,763
Int. Cl.³ A47K *3/22*
U.S. Cl. 4—448 **2 Claims**

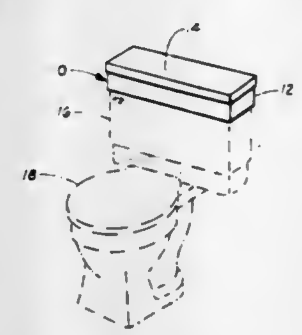

1. A hygiene apparatus comprising:
a portable housing, the housing having a first fluid chamber formed therein;
fluid routing means, disposed within the housing, for fluidly communicating with the first fluid chamber;
pump means, supported by the housing and in fluid communication with the fluid routing means, for pressurizing fluid received from the fluid routing means;
portable fluid delivery means, in fluid communication with the pump means, for dispensing pressurized fluid at a selected location, the housing is characterized as having a second fluid chamber formed therein; and
wherein the fluid routing means is characterized as fluidly communicating with the second fluid chamber and comprises:
manually controllable valve means, for selecting a selected one of the first and second fluid chambers with which the pump means fluidly communicates, in which the portable fluid delivery means is characterized as comprising:

a flexible conduit having an input end connected to the pump means, and having an output end;

a nozzle connected to the output end of the flexible conduit, the nozzle having a sprayer surface; and

an operator handle fixedly engaged with the nozzle, in which the nozzle is characterized as having a nozzle protection cap-engaging surface and as having a cleansing aperture formed in the nozzle protection cap-engaging surface, the apparatus further comprising:

a nozzle protection cap having an enclosing surface selectively disposable in overlying spaced-apart relation to the nozzle sprayer surface in a first installed position and in a second installed position, the nozzle protection cap characterized as permitting fluid existing the nozzle to drain from the nozzle by flowing through the cleansing aperture when the nozzle protection cap is in the first installed position, and as sealing the nozzle to prevent fluid flow through the cleansing aperture when the nozzle protection cap is in the second installed position.

4,371,994

ROTATIONAL INDEXING NOZZLE ARRANGEMENT

Lester R. Mathews, 9810 N. 37th St., Phoenix, Ariz. 85028, assignor to Lester R. Mathews; Lucien Warner, both of Phoenix, Ariz. and Water Circulation Patents, Inc., Syracuse, N.Y.

Filed Jun. 2, 1980, Ser. No. 155,042

Int. Cl.³ E04H *3/16, 3/18, 3/20*

U.S. Cl. 4—490 **11 Claims**

1. A rotational indexing nozzle arrangement adapted to be disposed in a conduit for supplying fluid under pressure comprising, a housing having a discharge end and being adapted to be disposed inside of such conduit, said housing including a support member having a central opening and two sides, a hollow stem having first and second ends slidably disposed in said central opening, a discharge head attached to said first end of said hollow stem adjacent the discharge end of said housing, abutment means at said second end of said hollow stem, first spring means between said abutment means and one side of said support member, and rotationally indexing means responsive to motion of said discharge head away from and toward said support member disposed between the other side of said support member and the under side of said discharge head for rotating said discharge head a predetermined amount upon each movement cycle of said discharge head.

4,371,995

RECREATIONAL BASIN

William H. Donhauser, 1128 Amador Ave., Berkeley, Calif. 94707

Filed Mar. 9, 1981, Ser. No. 241,479

Int. Cl.³ A47K *3/02*

U.S. Cl. 4—538 **9 Claims**

1. A recreational basin holding solids and fluid comprising:

a. a tub having a fluid inlet thereto;

b. a pan superposed in relation to said tub, said pan including means for draining fluid therefrom to said tub;

c. means for pumping fluids from said tub to said pan, said pumping means having a fluid inlet in said tub;

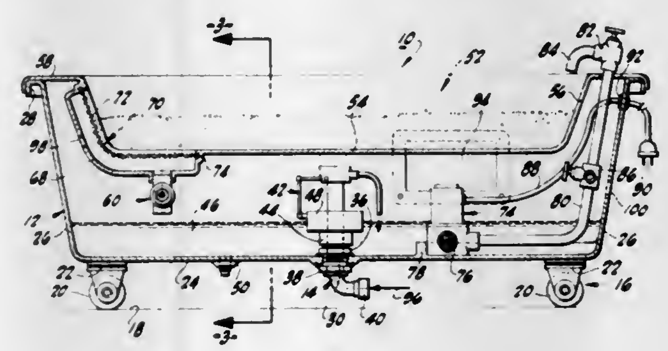

d. means for screening solids from the fluid draining from said pan to said tub;

e. means for regulating the level of fluid in said tub.

4,371,996

ARTICULATED BED

Sylvain Nahum, 16 avenue Dumas, 1206 Geneva, Switzerland

PCT No. PCT/CH80/00010, § 371 Date Jan. 2, 1981, § 102(e) Date Jan. 2, 1981, PCT Pub. No. WO80/01979, PCT Pub. Date Oct. 2, 1980

PCT Filed Jan. 31, 1980, Ser. No. 229,590

Claims priority, application Switzerland, Aug. 11, 1979, 7332/79

Int. Cl.³ A61G *7/00*

U.S. Cl. 5—69 **9 Claims**

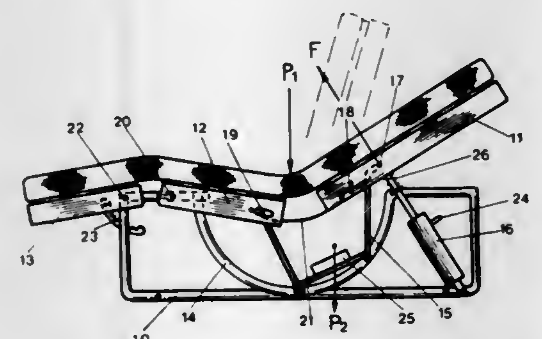

1. Articulated bed comprising: a bed frame including a cradle integral thereto; a mattress-holder including a back-rest and a separate seat-rest; a carrier and means mounting said carrier on said cradle for rocking motion of said carrier along said cradle; means mounting said back-rest on said carrier for rotation about an axis transverse of said back-rest intermediate the ends thereof; means mounting one end of said seat-rest on said carrier for rotation about an axis transverse of said seat-rest and further means mounting the other end of said seat-rest on said frame for rotation about a further axis transverse of said seat-rest; means to cause rocking of said carrier on said cradle, and means articulating adjacent ends of said back and seat-rests to one another, whereby when said carrier is rocked, along said cradle, said back-rest and seat-rest are inclined in opposite directions.

4,371,997

ADJUSTABLE FIRMNESS CUSHION WITH MULTIPLE LAYERED FOAM-FILLED COMPARTMENTS

Roy D. Mattson, 2194 Deer Pass Trail, White Bear Lake, Minn. 55110

Filed Aug. 25, 1980, Ser. No. 181,166

Int. Cl.³ A47C *27/10, 27/18*

U.S. Cl. 5—450 **6 Claims**

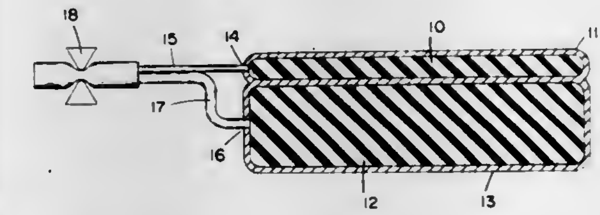

1. Cushion comprising:

at least two layers of flexible urethane foam, each layer substantially hermetically sealed in its own compartment by a surrounding thin sheet of flexible material the foam substantially filling each compartment;

one layer substantially overlaying another;

an air port for each of said compartments;

a tube connected at one end to each port and open to atmosphere at its other end; and

a manually operable valve coupled to said tubes for selectively opening or closing off the tubes.

4,371,998

HYBRID FLOTATION MATTRESS HAVING PROTECTING, WATER PROOF LINER

Milton A. Callaway, Medford, Oreg., assignor to Simmons U.S.A. Corporation, Atlanta, Ga.

Filed Dec. 31, 1980, Ser. No. 221,876

Int. Cl.³ A47C *27/08*

U.S. Cl. 5—451 **1 Claim**

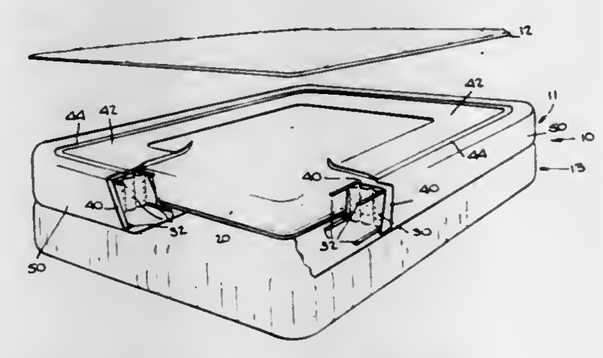

1. A hybrid flotation mattress comprising:

a perimeter of resilient bedding material defining a central cavity;

a water bag positioned within said central cavity;

a first protective liner extending over said perimeter of resilient bedding material, between said perimeter and said water bag, and underlying said water bag;

a second protective liner enveloping said perimeter, said water bag, and said first protective liner, a portion of said second protective liner extending over the peripheral portions of said water bag and defining an opening allowing access to said water bag, said second protective liner being sealed to said first protective liner above said perimeter of resilient bedding material thereby preventing any leakage from said water bag from reaching said perimeter.

4,371,999

AIR MATTRESSES

Keith Reid, 2082 Zanker Rd., San Jose, Calif. 95131

Filed Nov. 18, 1980, Ser. No. 208,079

Int. Cl.³ A47C *27/08*

U.S. Cl. 5—457 **4 Claims**

1. In an air mattress having top and bottom walls that are connected by a plurality of longitudinally-extending partitions which extend from adjacent one end wall of the mattress to a point adjacent the other end wall of the mattress and are secured to the top and bottom walls by seams that connect longitudinal flanges along each edge of each partition to the adjacent top or bottom wall, the improvement which comprises means defining a recess in each end of each partition to provide a pair of spaced flange portions adapted to be bent along the adjacent end wall of the mattress with its end portions secured to the end wall.

4,372,000

BEEHIVE FRAME AND METHOD OF CONSTRUCTION THEREOF

Edford N. Hurd, R.D. 1, Pennelville, N.Y. 13132

Filed Feb. 9, 1981, Ser. No. 232,471

Int. Cl.³ A01K *47/02*

U.S. Cl. 6—10 **8 Claims**

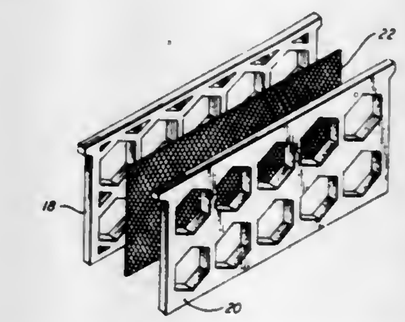

1. The method of constructing a disposable, single use honeycomb frame comprising:

(a) forming a unitary, molded, light weight, easily cuttable plastic member having a plurality of openings extending therethrough and surrounded on all sides by structure of predetermined thickness;

(b) cutting said member lengthwise into two pieces of approximately half said predetermined thickness, whereby each piece has a plurality of separated openings therethrough;

(c) placing a sheet of comb foundation at least as large as the total area of said openings between said two pieces; and

(d) joining said two pieces to one another with the openings in registration and said sheet covering the inside of each, whereby said frame may be placed in a super for construction of combs and deposit of honey within the openings on each side of said comb foundation and any desired portion of said frame including one or more of the honey-containing openings may be severed from the remainder of said frame.

4,372,001

CARPET DYEING SYSTEM WITH MOVABLE SQUEEGEE ROLL

H. Armin Maier, Calhoun, Ga., assignor to Gowin-Card, Inc. and Tuftco Corporation, both of Chattanooga, Tenn.

Filed Mar. 12, 1981, Ser. No. 243,087

Int. Cl.³ D06B *1/14, 11/00*

U.S. Cl. 8—151 **9 Claims**

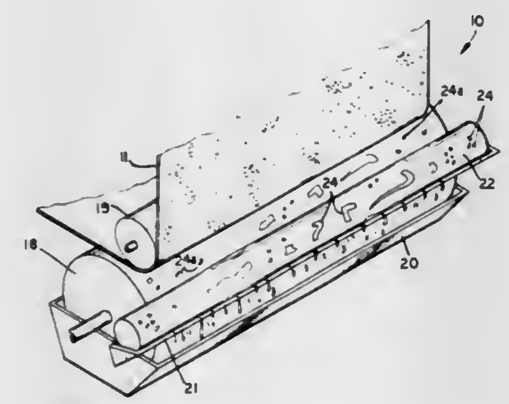

1. A process of dyeing carpet with a pile surface comprising moving the carpet along its length with its pile surface facing downwardly, and as the carpet is moved along its length contacting the downwardly facing pile surface of the carpet with the upper surface of a dye pickup roll, rotating the dye pickup roll so that its upper surface progressively moves into contact with the carpet, applying dye to the lower surface of said dye pickup roll, engaging the dye pickup roll at a position after dye has been applied thereto and before the dye pickup roll contacts the carpet with a squeegee roll which is longer than the surface of the pickup roll that contacts the carpet and which defines a pattern of high and low surfaces spaced about its circumference, rotating the squeegee roll so that the surface of the squeegee roll that engages the surface of the dye pickup roll moves in the same direction as the adjacent surface of the dye pickup roll and its high surfaces remove some of the dye from the surface of the dye pickup roll and the dye applied by the pickup roll to the carpet is formed in a pattern that corresponds to the high and low surfaces of the squeegee roll, and reciprocating the squeegee roll at an amplitude such that the pattern of high and low surfaces of the squeegee roll continues to be applied to the pickup roll and to the carpet but the pattern of dye applied to the pickup roll and to the carpet is displaced along the length of the pickup roll and across the length of the carpet.

4. Apparatus for applying dye to the pile surface of carpet and the like comprising a dye pickup roll, means for applying liquid dye to said pickup roll, means for rotating said pickup roll, means for moving carpet along its length and for moving the pile surface of the carpet into contact with said dye pickup roll and in the direction of movement of the dye pickup roll, a squeegee roll extending parallel to and in contact with said dye pickup roll at a position in the direction of rotation of said dye pickup roll between the position where dye is applied to the pickup roll and where the pickup roll contacts the pile surface of the carpet, means for rotating and reciprocating said squeegee roll, said squeegee roll having a cylindrical surface with a plurality of depressions therein spaced about the circumference of the squeegee roll, whereby the surface of the squeegee roll that contacts the pickup roll tends to remove the liquid dye from the surface of the pickup roll and the depressions of the squeegee roll create a pattern in the dye on the dye pickup roll and the pattern of dye is carried by the dye pickup roll to the pile of the carpet.

4,372,002

COTTON TREATING PROCESS

Eugene D. Small, 1302 La Paloma St., Amarillo, Tex. 79106

PCT No. PCT/US80/01387, § 371 Date Oct. 17, 1980, § 102(e) Date Oct. 17, 1980, PCT Pub. No. WO82/01567, PCT Pub. Date May 13, 1982

PCT Filed Oct. 17, 1980, Ser. No. 251,531

Int. Cl.³ D06B *3/02*

U.S. Cl. 8—156 **8 Claims**

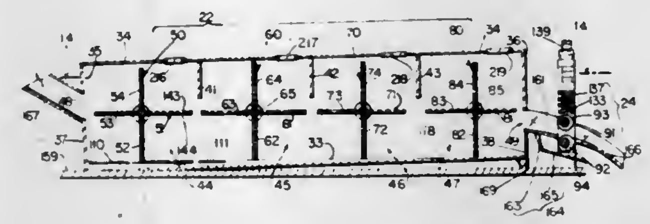

1. A process of impregnating loose cotton staple and like hollow fibers with chemicals comprising the steps of
feeding a mass of such fibers into and through a series of connected compartments in a baffled housing,
one pair of paddle assemblies, each said paddle assemblies being rotatable about an axle therefor, and each of said paddle assemblies comprising a plurality of paddles, located in each of said compartments and a body of chemical-containing aqueous liquor being also located in each of said compartments, said liquor at rest being located entirely below the level of the axles of said paddle assemblies,
rapidly rotating said paddle assemblies in opposite directions while in contact with said body of liquor and then thereby concurrently
(a) initially producing within each of the said compartments a vertically extending column comprising a frothy mass of bubbles of air separated by thin walls between said bubbles and locating such fibers in said thin walls between the bubbles of said column,
(b) picking up portions of the frothy mass of fibers and liquor from the mass of bubbles and positioning the fibers in thin films of chemical-bearing liquor on the surfaces of said paddles above the level of the axles of said paddle assemblies,
(c) dewatering the resulting thin films, and
(d) kneading the fibers individually and locating chemicals contained in said liquor within the lumen of each of such fibers.

4,372,003

INDUSTRIAL PIPE THREAD CLEANER

Lester W. Toelke, Houston, Tex., assignor to International Tool & Supply Co., Inc., Houston, Tex.

Filed Jun. 10, 1980, Ser. No. 158,342

Int. Cl.³ B08B *9/02*

U.S. Cl. 15—88 **9 Claims**

1. A powered thread cleaner especially adapted for cleaning threads of industrial tubulars, comprising:
(a) a housing having an end for receiving the threaded member to be cleaned;
(b) a brush support structure rotatably supported and driven within said housing;
(c) a set of brushes supported around the periphery of said brush support structure, said brush support structure having an irregularly shaped perimeter defining a plurality of perimeter portions extending from a central portion, said perimeter portions having means for adjustably securing a respective brush in a selected orientation with respect to the threads to be cleaned, and
(d) and set of brushes including one or more brush assemblies having (i) a shaped mandril upstanding from the brush support member and (ii) a plurality of relatively thin circular brushes spaced from one another on said mandril

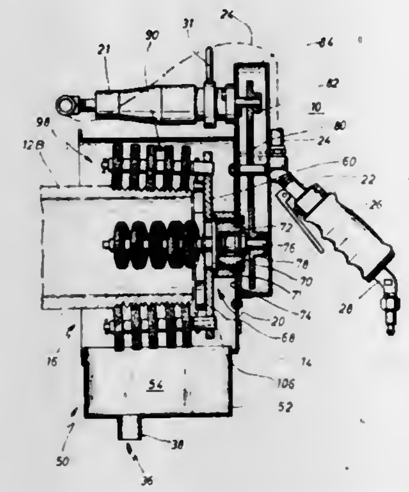

and mounted on said mandril in an adjustably fixed orientation with respect thereto.

4,372,004

WIDE-SWEEP CARPET CLEANER BRISTLE STRIP AND BRUSH ROLL

Don W. Vermillion, Anderson, S.C., assignor to The Singer Company, Stamford, Conn.

Filed Apr. 3, 1981, Ser. No. 250,795

Int. Cl.³ A46B *9/02, 13/02*

U.S. Cl. 15—182 **4 Claims**

1. In a brush or agitator roll of a suction cleaner for carpets or other floor coverings provided with at least a pair of diametrically opposed longitudinally extending spiral grooves and a bristle/agitator strip spirally, slidably engaged in each spiral groove, the improvement wherein each strip has a section including a band forming part of a crowned pulley for a drive belt and on either side thereof being provided with a series of holes for receiving bristle tufts wherein, on each side, the strip is provided with a radial hole at a medial location with each succeeding bristle hole being elongated so that its inner wall is radial and the outer wall is inclined away from the center by an amount equal to the inclination of the adjacent hole plus a fixed incremental amount so that although the inner edge of each hole is generally upright or radial, the outside edges are successively angled outwardly so that the holes can be molded utilizing a single core strip and the bristle tufts can be inserted and stapled radially, together with bristle tufts stapled therein having substantial bristles angled outwardly so as to provide a brush having a line of bristles effectively longer than the supporting strip.

4,372,005

OPERATOR FOR SLIDING DOORS

Richard X. Inesso, 6420 Adelphia St., Pittsburgh, Pa. 15206

Filed Aug. 4, 1980, Ser. No. 175,178

Int. Cl.³ E05F *3/10, 17/00*

U.S. Cl. 16—52 **7 Claims**

1. A closure for closing a pair of sliding doors that are adapted to overlap each other at least partially when the doors are opened comprising:
a pivoting link including a first link member pivotally mounted to a said door and a second member pivotally attached to said first link member and to the remaining said door, the point of attachment of said first member to said second member being offset from a line connecting the respective points at which said members are mounted to said doors, said point so attachment not being in alignment with said mounting points at anytime during normal operation of said closure, said closure causing said doors to close by moving at least a said door in a direction that

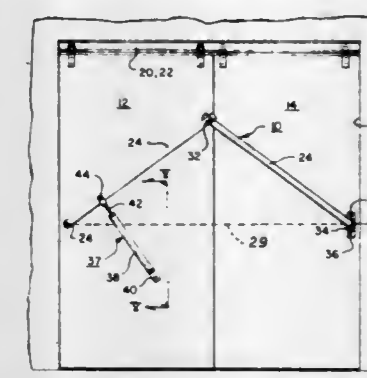

causes said doors to overlap each other progressively less by causing said point of attachment to move toward said connecting line; and
biasing means operatively connected between one said door and the said member mounted to that said one door for pivoting said point of attachment toward said connecting line to close said doors.

4,372,006

FREIGHT DOOR ROLLER HOUSING

Peter J. Stratta, Olympia Fields; John G. Stratta, Orland Park, and Douglas M. Camp, Midlothian, all of Ill., assignors to Harbor Tool Mfg. Inc., Chicago, Ill.

Filed Oct. 17, 1979, Ser. No. 85,609

Int. Cl.³ E05D *17/00*

U.S. Cl. 16—105 **15 Claims**

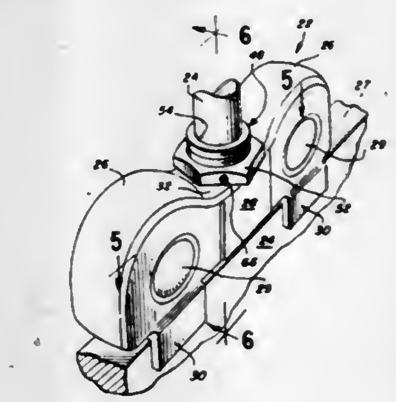

1. A roller assembly for use with the plug door of a railroad freight car in which the door has a vertically arranged support pin adapted to be pivotally connected with said roller assembly and having a cylindrical bottom end, said assembly comprising:
A. a pair of wheel wells each having a roller journalled therein, the wells being hollow and opening to their bottoms and the rollers having their bottom segments protruding from the said bottom openings and adapted to ride upon a rail of the said freight car and the wheel wells having means for guiding the assembly as it rides said rail;
B. a center block connecting the wells and forming therewith an integral structure, the block having an upper side,
C. a central vertical cylindrical passageway through the block; and
D. a bushing of generally thimble-shaped construction, having a central socket with a blind bottom end, the socket adapted to receive the bottom end of of a support pin therein in pivotal engagement, said bushing having a slide

fit engagement with said passageway and being inserted therein from the top end thereof, said bushing having means adjacent the upper end thereof cooperating with said upper side for retaining the bushing in position within said passageway against movement through the passageway downward but being free to be pushed upward and out of the passageway from the bottom end of the passageway, the bushing being plain on its exterior and being retained in a single vertical location within said passageway, and an annular counterbore in the upper end of the passageway larger in diameter than the passageway and forming an annular shoulder adjacent said upper end and said bushing including a flange seated on said shoulder in said counterbore, said counterbore, shoulder and flange comprising said retaining means.

4,372,007
RELEASEABLE HINGE MECHANISM
Hugh Lee, San Jose, Calif., assignor to Atari, Inc., Sunnyvale, Calif.
Filed Jan. 8, 1981, Ser. No. 223,649
Int. Cl.³ E05D *11/10*
U.S. Cl. 16—260 **6 Claims**

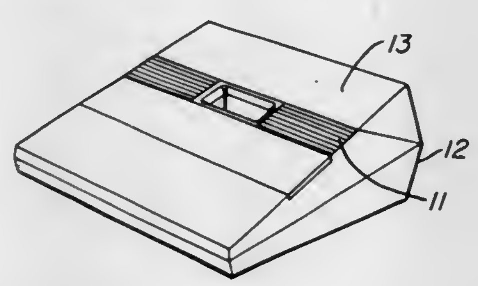

1. In combination, a releaseable hinge mechanism, a cover member and a base member having a deflectable support wall and a facing margin adjacent said support wall, said mechanism comprising:
a hinge connected to said cover member, said hinge including a central elongate portion having a flatted distal end and a pair of pivot pin portions flanking said distal end, said distal end including a pressure finger extending outwardly from the top edge;
a pair of cradle members located on said support wall for releaseably receiving said pivot pin portion; and
compound bracket means located on said facing margin, said bracket means including a spaced pair of relatively inflexible brace portions in facing relation with said flatted distal end and normally engaged in surface contact therewith when said cover member is in an opened position, said bracket means further including a deflectable finger portion located between said pair of brace portions and arranged for surface contact with said pressure finger when said cover member is moved between a closed position and said opened position, said bracket means further including a spaced pair of retaining fingers extending over said distal end of said hinge to restrict movement of said pivot pin portions away from said cradle members, whereby overtravel of said cover member past said opened position causes the lower edge of said flatted distal end to engage said brace portions and progressively deflect said support wall away from said facing margin until said distal end is released from said retaining fingers.

4,372,008
FOOD PATTY MOLDING MACHINE WITH MULTI-ORIFICE FILL PASSAGE AND STRIPPER PLATE
Glenn A. Sandberg, Lockport, Ill., assignor to Formax, Inc., Mokena, Ill.
Continuation-in-part of Ser. No. 204,840, Nov. 7, 1980. This application Apr. 23, 1981, Ser. No. 256,797
Int. Cl.³ A22C *7/00*
U.S. Cl. 17—32 **5 Claims**

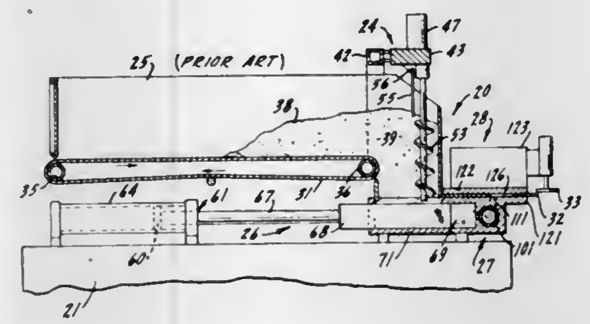

1. In a food patty molding machine of the kind comprising:
a mold plate having at least one mold cavity of given surface area formed therein;
mold plate drive means for driving the mold plate, in a repeating cycle, from a fill position to a discharge position and back to the fill position;
a food pump for pumping a moldable food product;
a fill passage extending from the outlet of the food pump to the mold plate and connecting the food pump outlet to the mold cavity when the mold plate is in its fill position, the fill passage having a cross-sectional area, immediately adjacent to the mold plate fill position, effectively encompassing substantially the entire surface area of the mold cavity;
and an orifice plate, interposed in the fill passage immediately adjacent the mold plate, including a multiplicity of fill orifices distributed throughout substantially the entire surface area of the mold cavity;
the improvement comprising:
the fill orifices being aligned in parallel rows with equal center-to-center spacing between the orifices in the direction of the rows;
a stripper plate slidably mounted in the fill passage immediately adjacent the side of the orifice plate opposite the mold plate, the stripper plate including a multiplicity of fill openings aligned one-for-one with the fill orifices as extensions thereof;
and stripper plate drive means, synchronized with the mold plate drive means, for sliding the stripper plate through a distance approximately equal to the center-to-center spacing of the orifices once in each mold plate cycle.

4,372,009
SUPPORT SHACKLE AND PRODUCT DROP MECHANISM
Richard D. Linville, P.O. Box 7, Pleasant Valley, Iowa 52767
Filed Jan. 21, 1981, Ser. No. 227,140
Int. Cl.³ A22C *21/00*
U.S. Cl. 17—44.1 **2 Claims**

1. A shackle for hanging a product from a conveyor, comprising:
a single, rigid, elongated bar,
an apertured plate member means at one end of said bar for pivotably suspending said shackle from said conveyor,
support means extending laterally from the other end of said bar for holding said product,
striker means mounted adjacent to said bar for abruptly striking said bar to release said product carried by said support means,
said conveyor including a depending pendant member from which said apertured plate member is suspended, and

means for preventing said apertured plate member from twisting,

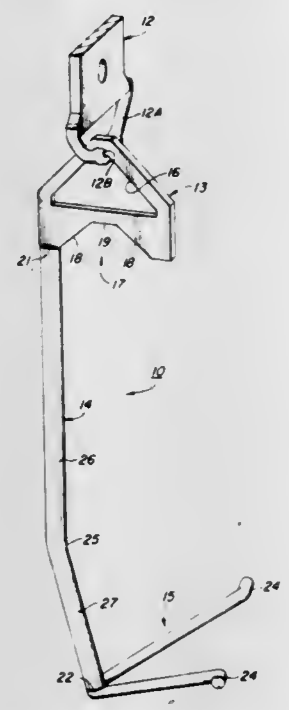

said last mentioned means including a notch in one of said members, the other of said members being disposed in said notch.

4,372,010
APPARATUS FOR THE AUTOMATIC INFEED OF A TEXTILE FIBRE SHEET INTO A COILER
Roger Gauvain, Buhl, France, assignor to Societe Alsacienne de Constructions Mecaniques de Mulhouse, France
Filed Sep. 17, 1980, Ser. No. 188,077
Claims priority, application France, Sep. 28, 1979, 79 24188
Int. Cl.³ D04H *11/00;* D01H *5/72*
U.S. Cl. 19—159 R **2 Claims**

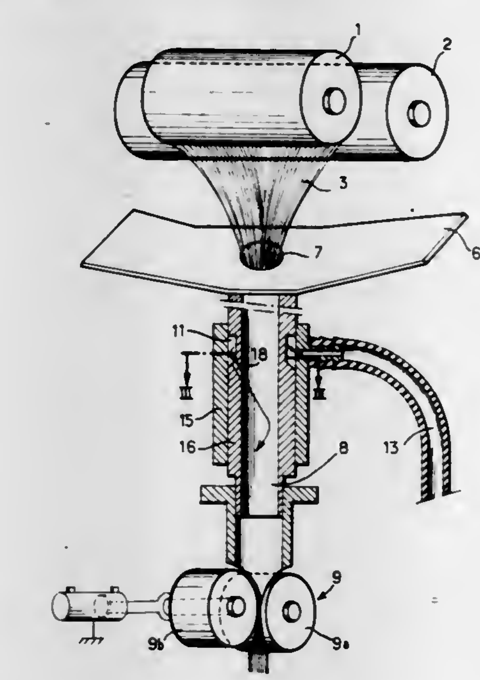

1. Apparatus for the automatic infeed of a textile fibre sheet into a coiler, for example at the delivery side of a drafting machine, comprising a smooth-surfaced transverse guide to be placed at the delivery side of a pair of drawing rollers and having an orifice for gathering into a tuft the fibre sheet coming from said pair of rollers, a cylindrical outlet tube extending from said gathering orifice, pneumatic means coupled to said cylindrical outlet for inducing a suction of air therein and drawing the tuft into the outlet tube, and a pair of final draw rolls set at the downstream end of the outlet tube, said final rolls being positioned in their normal working made in a closed position to close substantially said downstream end for mechanically drawing the tuft through said rolls, and one of said final rolls being temporarily movable to a separated position apart from the other roll to open said downstream end and to cause said pneumatic means to induce a suction of air through said tube to drive the leading end of the tuft through said rolls.

4,372,011
FLEXIBLE BAND CLAMP
Nereo Aranyos, 1073 Dominion Rd., Auckland, New Zealand
Filed Jan. 27, 1981, Ser. No. 228,738
Int. Cl.³ B65D *63/10*
U.S. Cl. 24—20 TT **4 Claims**

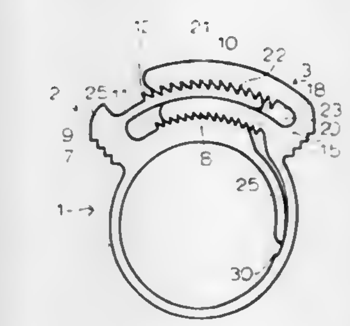

1. A clip including a band formed of a suitable material, rib formations being provided at both ends of the band and the rib formations each comprising a plurality of teeth; a first end of the band being formed with a lower rib and an upper rib being spaced apart from and above said lower rib, the teeth of the lower rib at the first end of the band extending upwardly and a recess being formed between the upwardly extending teeth and the upper spaced apart rib at the first end of said band; an upper surface of said upper rib being formed or provided with a plurality of teeth; the rib formation at a second end of the band being in the form of at least a base end rib, being formed on its lower face with a plurality of downwardly extending teeth; a spaced apart and overhanging rib being provided above the base end rib and being provided with downwardly extending teeth on its lower surface; a recess being formed between the upper surface of the base end rib and the teeth on the lower surface of the upper spaced apart overhanging rib; the arrangement being such that the ends of the band are brought together and the base end rib and downwardly extending teeth thereof of the second end are received and located within the recess formed between the upwardly extending teeth of the lower rib of the first end of the band and the upper rib at the first end of the band; the said upper rib in the first end of the band passing into the recess formed between the base end rib of the second end of the band and the upper overhanging rib of the second end of the band; the teeth in the upper rib at the first end of the band and the teeth in the upper overhanging rib at the second end of the band engaging one with the other so that the ends of the band are engaged one with the other.

4,372,012
BELT ADJUSTING DEVICE FOR A SAFETY BELT
Artur Föhl, Schorndorf-Haubersbronn, Fed. Rep. of Germany, assignor to REPA Feinstanzwerk GmbH, Alfdorf, Fed. Rep. of Germany
Filed Feb. 14, 1980, Ser. No. 121,475
Claims priority, application Fed. Rep. of Germany, Feb. 15, 1979, 2905832
Int. Cl.³ A44B *19/00*
U.S. Cl. 24—68 R **13 Claims**

2. Belt adjusting device for a safety belt, comprising a sliding member having a slot formed therein bordered by edges of said sliding member through which a portion of the safety belt is pulled forming a loop, and a locking-bar at least partly disposed within the belt loop, said locking-bar being slideable transversely to said slot and having a groove formed therein

extending parallel to said slot, when a load is applied to the belt, said groove formed in said locking-bar is aligned opposite one of said edges of sliding member bordering said slot, and the belt is pressed between said groove formed in said locking-bar

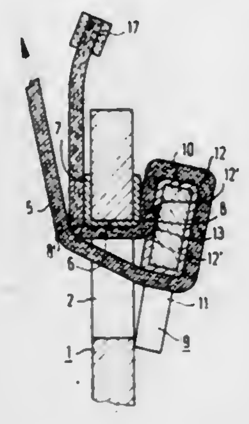

and said one edge of said sliding member, said locking-bar including a sheathing partly surrounding said locking bar in a given direction, said sheathing having parallel end edges being spaced apart from each other forming the width of said groove.

4,372,013
GROMMET
Charlie V. Gautier, Jr., 110 The Village #502, Redondo Beach, Calif. 90277
Filed Jul. 27, 1981, Ser. No. 287,310
Int. Cl.^{3} A43C *5/00*
U.S. Cl. 24—144 **8 Claims**

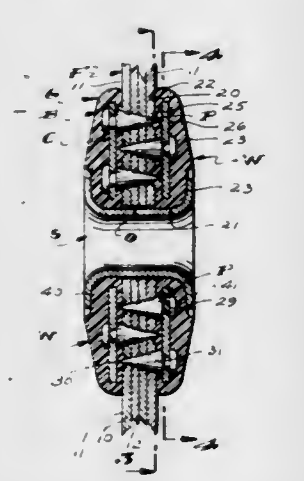

1. A grommet comprising a pair of annular washers with flat opposing axially disposed inner surfaces engaged with axially outwardly disposed outer surfaces on a multi-laminate fabric structure and concentric with and about an opening in said structure, an elongate coupling sleeve concentric with and engaged through said opening and through said washers and having radially outwardly flared opposite end portions engaging axially outwardly disposed outside surfaces on said washers and holding said washers and fabric structure in tight assembled relationship, said washers have annular plastic inner portions engaged with said outer surfaces of the fabric structure, flat annular metal portions outward of said plastic inner portions and a plurality of circumferentially and radially spaced inwardly convergent metal projections projecting axially inwardly from the annular metal portion of each washer through the inner plastic portion thereof, through said fabric structure and penetrating the plastic portion of the other washer.

4,372,014
CONSTRUCTION SYSTEM AND FASTENER THEREFORE
Harold G. Simpson, Oklahoma City, Okla., assignor to Star Manufacturing Co., Oklahoma City, Okla.
Continuation-in-part of Ser. No. 445,498, Feb. 25, 1974, Pat. No. 3,935,682. This application Dec. 31, 1975, Ser. No. 645,601
The portion of the term of this patent subsequent to Feb. 3, 1993, has been disclaimed.
Int. Cl.^{3} A44B *19/14*
U.S. Cl. 24—201 C **16 Claims**

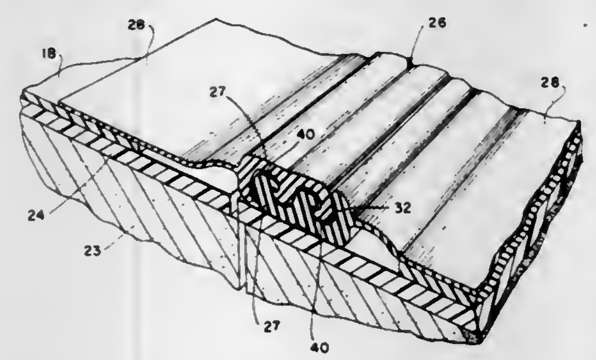

1. A fastener adapted to be disposed along an edge of a member in a construction system including a plurality of such members arranged side by side, said fastener comprising, in combination:
a fastener body including coupling means for cooperative fastening relationship with a fastener along an adjacent member;
means for providing connection between said fastener body and the member on which it is to be disposed; and
indicator means located on said body for providing a distinctive indication when said coupling means is not at least substantially fully engaged with the adjacent fastener.

4,372,015
BLIND HOLE CLAMPING TOOL
William A. Rhoton, Costa Mesa, Calif., assignor to The Boeing Company, Seattle, Wash.
Filed May 13, 1981, Ser. No. 263,332
Int. Cl.^{3} A44B *17/00*
U.S. Cl. 24—221 R **3 Claims**

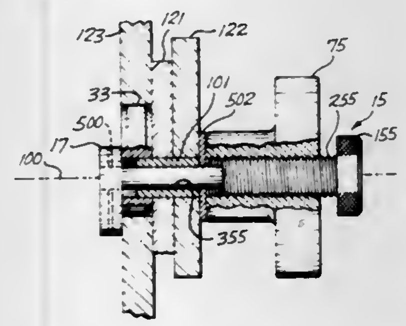

1. A blind hole clamping tool having a central axis comprising:
a rod member disposed along the central axis, said rod having a knob end portion and a disk-shaped clamp member attached to a further end portion, said rod having a threaded portion intermediate said knob end portion and said disk-like clamp member;
a bushing concentrically disposed about said rod member between said disk-shaped clamp member and said threaded portion of said rod member;
a wheel-shaped member concentrically disposed about said threaded portion of said rod member; and,
a disk-shaped clamp locator, and disk-shaped wheel member concentrically disposed about said bushing between said disk-shaped clamp member and said wheel-shaped member.

4,372,016
HARDWARE SNAP AND METHOD OF PRODUCING SAME
Paul A. LaViolette, North Haven, Conn.; Anthony Caccioli, Longmeadow, Mass.; Alexander Garcia, Berlin, Conn.; Earl H. Hotchkiss, Southington, Conn., and Alfred J. Marchitto, Jr., Glastonbury, Conn., assignors to Gulf & Western Manufacturing Company, Southfield, Mich.
Filed Jul. 3, 1980, Ser. No. 165,737
Int. Cl.^{3} B16C *1/36;* **A44B** *13/00*
U.S. Cl. 24—241 PS **42 Claims**

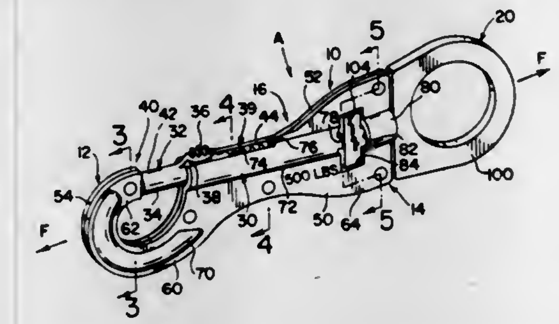

1. In an assembled hardware device including a unitary body having a hook means with an open side for supporting a tension force applied to said device, connector means for connecting said body to an external force supporting element, and an intermediate force transmitting portion between said hook means and said connector means; a keeper member; and means for assembling said keeper member onto said body for selectively opening and closing said open side of said hook means, the improvement comprising: said unitary body including two generally flat sheet metal blanks having connecting surface portions in the planes thereof, and means for securing said connecting surface portions of said blanks in face-to-face relationship, each of said blanks including a hook, a connector portion and an intermediate portion extending between said hook and connector portion, with said hooks of said secured blanks combining to form said hook means.

4,372,017
U-BOLT EXHAUST SYSTEM CLAMP WITH DOUBLE SADDLE
John E. Heckethorn, Dyersburg, Tenn., assignor to Heckethorn Manufacturing Co., Dyersburg, Tenn.
Filed Sep. 17, 1980, Ser. No. 188,262
Int. Cl.^{3} B01J *6/00*
U.S. Cl. 24—277 **6 Claims**

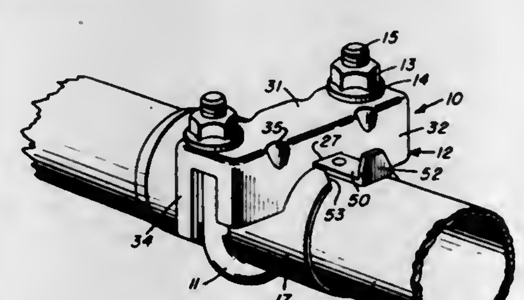

1. A U-bolt clamp assembly adapted for sealing and interlocking a pair of telescoped metal tubes to each other, said clamp assembly comprising a U-bolt and a saddle, said U-bolt having substantially parallel legs threaded adjacent the free ends thereof, and a pipe engaging radius, said saddle having a front face, a rear face parallel to and spaced from said front face, and a top wall connecting said faces, said front face having a primary pipe-engaging radius on its ower edge, said rear face having a secondary pipe-engaging radius on its lower edge, U-bolt receiving apertures in said top wall, a vertical plane through the center line of said apertures being substantially coplanar with said front face pipe-engaging radius, and nuts for engagement on the threaded ends of the U-bolt legs, whereby when applied to a pair of telescoped tubes tightening of said nuts on said U-bolt ends against said top wall will result in the front face pipe-engaging radius and said U-bolt pipe-engaging radius compressing said tubes to form a substantially circumferential indentation therein, said rear face radius bearing upon the outer of the telescoped tubes and serving as a support.

4,372,018
COMBINED CASKET AND BURIAL VAULT ASSEMBLY WITH STACKABLE COMPONENTS
John P. K. Miller, IV, 42 Magnolia Ave., and Benjamin T. Breazeale, II, 39 Maple Ave., both of Okaloosa County, Shalimar, Fla. 32579
Filed Sep. 29, 1981, Ser. No. 306,654
Int. Cl.^{3} A61G *17/00*
U.S. Cl. 27—35 **10 Claims**

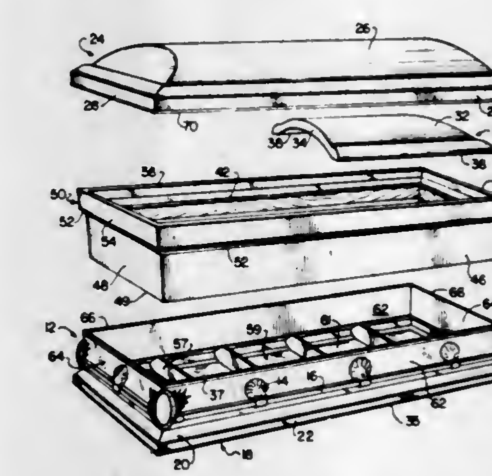

1. A combined casket and burial vault assembly of molded material comprising:
(a) a casket body having two opposed side walls, two opposed end walls and a bottom wall, said side walls and said end walls tapering outwardly from said bottom wall and terminating at their upper edges in a peripheral flange portion which defines an enlarged top opening for the casket body, said flange portion comprising:
(1) a flared portion extending outwardly from said side walls and said end walls at an angle relative to the vertical which is greater than the taper angle of said side walls and said end walls, respectively,
(2) an upstanding lip portion tapering outwardly from said flared portion at an angle relative to the vertical which is less than the angle of said flared portion, said upstanding lip portion terminating in a free edge surface suitable for receiving a sealant material,
(b) a lid receivable on the enlarged top opening of said casket body, said lid having a convex top porton and a depending peripheral lip portion, said depending lip portion tapering inwardly from said convex top portion at an angle corresponding to the outward taper angle of the upstanding lip portion of the casket, whereby said depending lip portion may be placed in overlapping and gripping relationship with the upstanding lip portion of said casket body when the lid is closed over the enlarged top opening of the casket body, with the free edge surface of said upstanding lip portion thereby being brought substantially into contact with the interior surface of the convex top portion of the lid for retaining a sealant material therebetween; and
(c) a display carrier for receiving said casket body, said display carrier comprising two opposed side walls, two opposed end walls, and a bottom wall.

4,372,019

METHOD OF MANUFACTURING PROJECTILES

Lennart Johansson, Karlskoga, Sweden, assignor to Aktiebolaget Bofors, Bofors, Sweden

Filed Feb. 2, 1981, Ser. No. 230,478

Claims priority, application Sweden, Feb. 18, 1980, 8001265

Int. Cl.³ B21K *21/06;* **B21D** *39/00*

U.S. Cl. 29—1.23 **3 Claims**

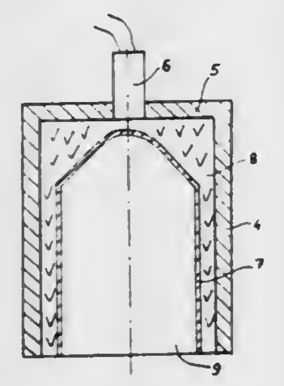

1. A method for manufacturing an ammunition unit comprising:

forming a shell body of said ammunition unit having at one end a surface shaped for receiving a pipe cap, and a longitudinal surface portion for receiving a driving band;

locating a sleeve material a distance apart from said shell body surfaces, said sleeve material having a shape substantially conforming to the shape of said shell body;

applying an explosive force against said sleeve material in a direction for cladding said sleeve material to said shell body whereby a clad surface is formed on said shell body; and

removing portions of said cladding material to form a pipe cap at said one end, and to form a driving band on said longitudinal surface, whereby an ammunition unit is produced having a pipe cap and driving band which can withstand explosive forces produced during firing of said ammunition unit.

4,372,020

SLAG REMOVAL APPARATUS

Harry E. Anderson, Pittsburgh, and Raymond E. Heasley, McKees Rocks, both of Pa., assignors to Anderson Engineers, Inc., Carnegie, Pa.

Filed May 26, 1981, Ser. No. 267,255

Int. Cl.³ B08B *1/02*

U.S. Cl. 29—81 H **17 Claims**

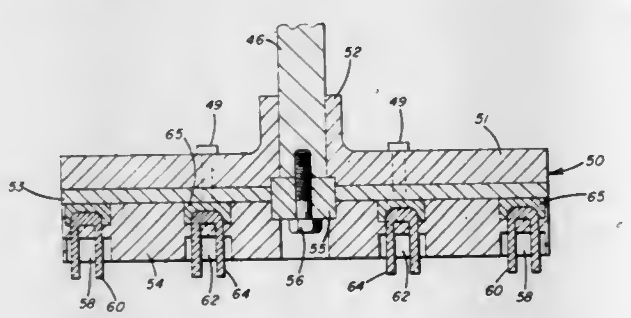

1. Apparatus for removing slag from surfaces of metal shapes, said apparatus including a conveyor belt, at least one vertically movable impact unit located above said conveyor belt, said impact unit including an impact head and means to rotate said impact head, means to adjust the vertical position of said impact unit, a substantially closed cabinet surrounding said impact unit and that portion of said conveyor belt above which said impact unit is located, said cabinet having inlet and outlet openings for said conveyor belt, said impact head including a disc having a peripheral groove formed in the upper surface and an aligned peripheral groove formed in the lower surface, radially aligned pairs of holes extending between said grooves throughout the circumference of said disc, a flexible steel cable extending from said groove formed in the upper surface of said disc through each pair of radially aligned holes and into and through said groove formed in the lower surface of said disc with its ends located below the lower surface of said disc, whereby the ends of said flexible steel cables contact slag on the surfaces of metal shapes passing below said impact head on said conveyor belt and knock the slag off of the surface of the metal shapes by the application of a substantially horizontal force to said slag.

4,372,021

DEVICE FOR MOUNTING AND SECURING A MEMBRANE ON AN AMPEROMETRIC CELL

John M. Hale, Meinier, and Eugen Weber, Hinwil, both of Switzerland, assignors to Orbisphere Corporation Wilmington, Collonge-Bellerive, Switzerland

Division of Ser. No. 164,291, Jun. 30, 1980, Pat. No. 4,325,797. This application Nov. 9, 1981, Ser. No. 319,708

Int. Cl.³ B23P *19/02*

U.S. Cl. 29—235 **1 Claim**

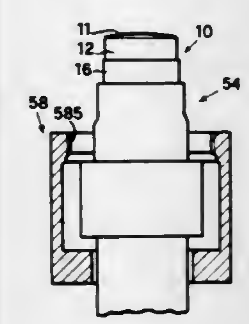

1. A device for mounting and securing a membrane on an amperometric cell, said device comprising a plunger connected with a cam in aligned operative arrangement with a cylinder, a collar for receiving and supporting an amperometric cell near a sensing end thereof; said cylinder and said collar each having end portions for mutual interconnection; said plunger having a resilient member for temporarily pressing a polymer film onto a frontal portion of said sensing end, and a cylindrical surface for temporarily holding an annular member suitable as a die ring for shaping and holding said polymer film on said sensing end; said plunger and said collar being aligned when in said mutual interconnection so that upon movement of said plunger towards said sensing end of said amperometric cell supported by said collar means said annular member is forced from said plunger onto said sensing end while said polymer film is pressed onto said frontal portion of said sensing end.

4,372,022

MACHINE FOR PROGRESSIVELY CLOSING FLANGES OF CAP STRIPS ON STANDING RIB ROOFS

Hubert L. Puckett, Columbus, Miss., assignor to The Ceco Corporation, Chicago, Ill.

Filed Apr. 24, 1980, Ser. No. 143,192

Int. Cl.³ B21D *37/00*

U.S. Cl. 29—243.58 **13 Claims**

1. A machine for locking sheets of material together by simultaneously deforming a longitudinal metal cap and adjacent edges of said sheets into a seam, said machine comprising:

(a) a frame;

(b) a first longitudinal die pivotally carried by said frame and having a contoured face;

(c) a second longitudinal die pivotally carried by said frame, having a contoured face, and disposed laterally with respect to said first die;

(d) a motor means for repeatedly swinging said first and second dies laterally relative to each other, causing the faces of the first and second dies to oscillate between an open position and a closed position about said cap disposed between said faces, said first and second dies disposed to deform said cap as said first and second dies swing to said closed position; and

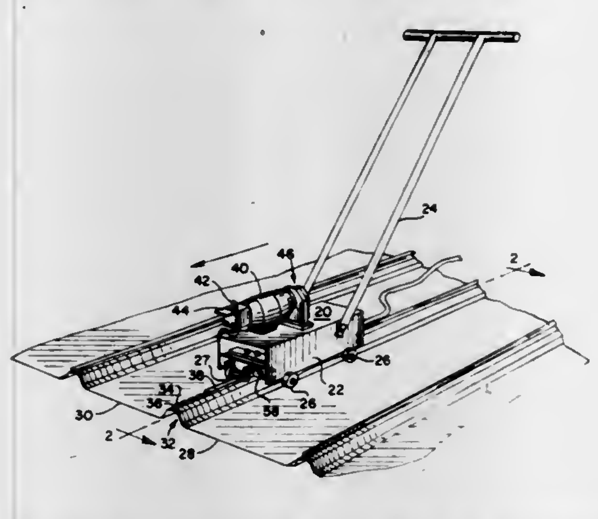

(e) a means for mounting said frame for movement along said cap,

whereby the closing of said die faces progressively bends said cap into a seam.

4,372,023

VALVE ADJUSTMENT APPARATUS

John H. Castoe, 10234 McVine St., Sunland, Calif. 91040

Filed Nov. 24, 1980, Ser. No. 209,676

Int. Cl.³ B23P *19/04*

U.S. Cl. 29—256 **16 Claims**

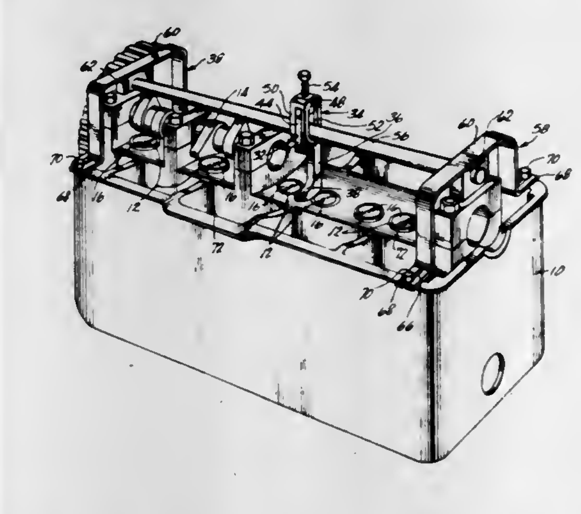

1. Apparatus for removing a valve adjusting disc from a valve lifter in the valve mechanism of an engine cylinder head, in which the valve lifter bears against a spring-biased valve, and the valve adjusting disc is seated in the valve lifter, the apparatus comprising:

an elongated rigid cross-bar;

means for supporting the cross-bar in a fixed position above the valve lifter;

a force-applying member having an elongated force-applying arm with a working face for contacting the valve lifter and having a socket for slidably engaging the cross-bar for cooperating with the cross-bar for holding the working face of the force-applying arm in a working position in contact with the valve lifter independently of contact with the valve adjusting disc, the socket allowing the force-applying arm to move freely along the length of the cross-bar, to move up and down relative to the cross-bar, and to rotate relative to the cross-bar; and

force-applying means for slidably engaging the cross-bar for being movable freely along the length of the cross-bar, the force-applying means having an adjustment screw for applying an adjustable amount of force to the socket of the force-applying member against the resistance provided by the attachment of the force-applying means to the fixed cross-bar and for retaining said force to compress the working face of the force-applying arm against the valve lifter for moving the valve lifter downwardly relative to the valve adjusting disc to a compressed position in which the valve lifter is retained by the force-applying arm.

4,372,024

BEARING PUSHER

Mike Shevada, 2856 Yellow Pine Dr., Jacksonville, Fla. 32211

Filed Jun. 5, 1981, Ser. No. 270,770

Int. Cl.³ B23P *19/04*

U.S. Cl. 29—260 **5 Claims**

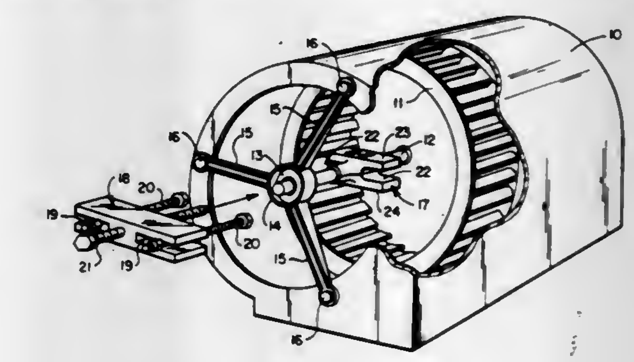

1. A bearing pusher comprising a pusher portion and a puller portion,

said pusher portion comprising two complementary members,

means for removably joining said members together, said members when joined together providing a centrally disposed hollow cylindrical portion adapted to surround a shaft and two spaced parallel slots co-planar with the axis of said cylindrical portion, said centrally disposed cylindrical portion extending beyond said slots along the axis of said cylindrical portion a distance which is slightly greater than the thickness of the bearing to be pushed, said puller portion comprising a parallelepiped provided with parallel slots extending inwardly from its two opposite smallest faces and a threaded opening centrally disposed in said parallelepiped and parallel to said slots,

a bolt threaded positioned in said threaded opening and

two bolts provided with nuts on each end thereof adapted to fit in the slots of said puller portion and the slots of said pusher portion.

4,372,025

LIGHT SOURCE TO LOCATE NOZZLE IN TANK

Gunter R. Behle, St. Peters, Mo., assignor to ACF Industries, Incorporated, New York, N.Y.

Filed Mar. 16, 1981, Ser. No. 244,500

Int. Cl.³ B23Q *17/00, 3/00*

U.S. Cl. 29—407 **20 Claims**

1. A method of aligning a tank bottom member with a tank top member comprising: forming a bottom opening in a tank bottom; attaching a mounting flange for the bottom member to the tank bottom into said bottom opening; removably attaching a vertically extending light source to the mounting flange; shining the light source upwardly into the tank to indicate a reference point on the internal surface of the tank for locating a tank top opening; marking the reference point; forming a top opening in the tank top at the reference point; locating a tank top member within the tank top opening; said tank top member being hollow; inserting a removable target fixture into said tank top member; shining the light source from the tank bot-

tom onto the target located in the tank top member; and when the light beam in the tank top member is pointed at the center

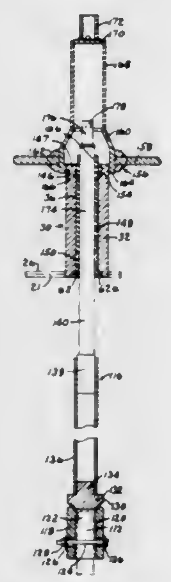

portion of the target, at least temporarily attaching the tank top member to the tank top.

4,372,026
METHOD AND APPARATUS FOR CONNECTING AND DISCONNECTING TUBULAR MEMBERS
Donald E. Mosing, P.O. Box 51729, Lafayette, La. 70505
Filed Sep. 16, 1980, Ser. No. 187,829
Int. Cl.³ B25B *17/00*
U.S. Cl. 29—426.5 **15 Claims**

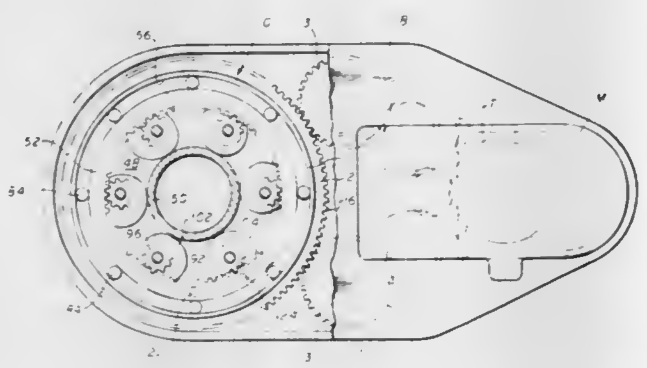

1. A power energized mechanism for making up and breaking out sections of tubular members and the like said mechanism comprising:
a housing structure;
drive means supported by said housing;
power means for imparting power to said drive means; and means for engaging said tubular members, said means for engaging being positionable into and out of engagement with the tubular members by said drive means, said means for engaging the tubular members upon actuation of said drive means including curved surfaces thereon defining a uniform motion curve wherein making up or breaking out of said tubular members occurs upon movement of the drive means and said curved surfaces cause engagement and rotation of the tubular members for such making up and breaking out operations as desired without interfering with the surface of the tubular members.

4,372,027
METHOD OF MANUFACTURING PARABOLIC TROUGH SOLAR COLLECTOR
Joseph A. Hutchison, Dallas, Tex., assignor to Solar Kinetics, Inc., Dallas, Tex.
Division of Ser. No. 136,828, Apr. 3, 1980, abandoned. This application Jun. 26, 1981, Ser. No. 277,915
Int. Cl.³ B23P *11/02*
U.S. Cl. 29—448 **4 Claims**

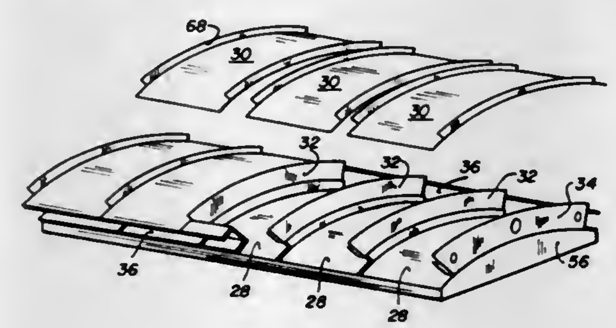

1. A method for assembling monocoque stressed parabolic solar collectors comprising the steps of:
(a) form fitting by stretching a plurality of interior parabolic mirror channels to the surface of a male mold fixture with sides of the channels extending upwardly;
(b) positioning a parabolic bow at each side of each interior parabolic mirror channel and fastening said bows to said sides of said stretched channels to form an integral unit;
(c) stretching and positioning an exterior parabolic channel spaced above each of said interior parabolic mirror channels and between each pair of parabolic bows;
(d) attaching said stretched exterior parabolic channels to said parabolic bows to form a stressed module;
(e) attaching edge channels to the longitudinal edges of said module by attaching said edge channels to the ends of each parabolic bow abutting said edge channels.

4,372,028
METHOD OF MANUFACTURING FOAM INSULATED TANK
Keith R. Clark, and Michael Focia, Jr., both of Montgomery, Ala., assignors to Rheem Manufacturing Company, Montgomery, Ala.
Filed Oct. 6, 1980, Ser. No. 194,425
Int. Cl.³ B23K *31/02*
U.S. Cl. 29—460 **8 Claims**

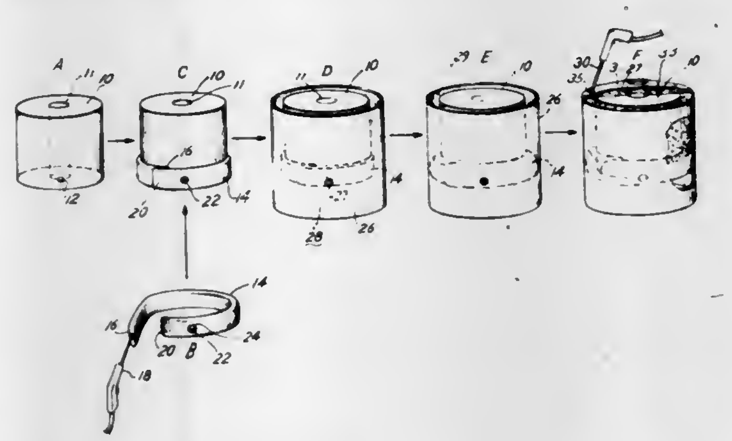

1. A method of manufacturing a multiple layer water tank of the type including an inner wall, an intermediate layer of expanded foam material and an outer wall comprising the steps of:
(a) forming a flexible, expandable bag in a configuration which may be affixed about the inner wall;
(b) forming voids in the flexible bag by sealing a passage through the bag to define open spaces in the final intermediate layer thereby facilitating assembly connections and installations from the inner wall through the outer wall;
(c) filling the flexible bag with an expandable foam material;
(d) immediately positioning the flexible bag circumferentially about the inner wall to define at least a portion of a mold form between the inner wall and outer wall;
(e) aligning the void of the flexible bag with a connection to the inner wall;
(f) thereafter immediately positioning the outer wall about the inner wall and flexible bag to define a space between the inner wall and outer wall;
(g) orienting a connection of the outer wall with the flexible bag void;
(h) waiting for the flexible bag contents to expand and for the bag to engage simultaneously the inner wall and outer wall and thereby define, at least in part, a mold form in the space between the walls; and
(i) filling the space between the walls with expandable foam material and retaining said material by the expanded flexible bag and the walls.

4,372,029
APPARATUS FOR PROVIDING AN ELECTRICAL COIL WITH LEADS
James W. Morton, Hickory, N.C., assignor to General Electric Company, Philadelphia, Pa.
Division of Ser. No. 34,793, Apr. 30, 1979, Pat. No. 4,262,413. This application Nov. 3, 1980, Ser. No. 203,199
Int. Cl.³ H01R *43/02*
U.S. Cl. 29—564.4 **2 Claims**

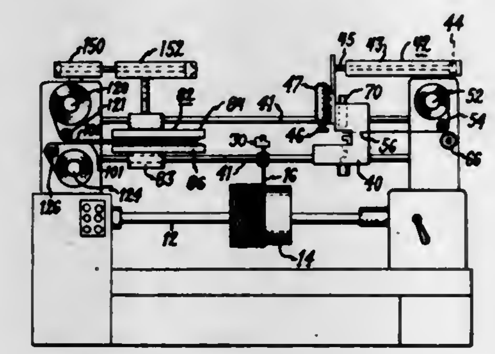

1. A machine for making a coil from conductive wire having an insulating coating bonded thereto and for providing the coil with at least one conductive lead, comprising:
a. winding means for winding the coated wire about a coil axis while advancing the wire along its length past a work station,
b. means for stopping the winding operation when a predetermined region of the wire is located at said work station,
c. a framework located at said work station which is reciprocably movable in a direction transverse to the wire at said work station,
d. insulation-removing means operable to remove a section of said insulating coating from said predetermined region of said wire, thereby providing a section of bare wire at said station,
e. means for releasably fixing to said framework a thin conductive lead-forming strap so that when said framework is moved in said one transverse direction, it carries said conductive strap into a position where it can contact said bare section of wire,
f. means carried by said framework for producing a cold weld between said conductive strap and said section of bare wire when said strap has been carried by said framework into a position where the strap can contact said section of bare wire,
g. a traversing mechanism cooperating with a portion of said wire before the wire portion enters the coil for shifting the wire along the longitudinal axis of the coil so that the coil is wound in layers, said traversing mechanism comprising wire-guiding traversing structure that moves axially of the coil in one direction while one layer is wound and in the opposite direction while the next layer is wound,
h. framework stop means for stopping transverse movement of said framework in preparation for a cold-welding operation, and
i. means for coupling said framework stop means to said traversing structure so that said framework stop means moves through traversing movement with said traversing structure and is located to effect stopping of said framework in a position wherein said cold weld means is aligned with said wire and is then located to effect a weld between said strap and said wire.

4,372,030
METHOD FOR PRODUCING A SEMICONDUCTOR DEVICE
Shinji Saitoh, Yokohama, Japan, assignor to Vlsi Technology Research Association, Japan
Filed Nov. 19, 1980, Ser. No. 208,395
Claims priority, application Japan, Nov. 21, 1979, 54/150977
Int. Cl.³ H01L *21/26*
U.S. Cl. 29—569 R **8 Claims**

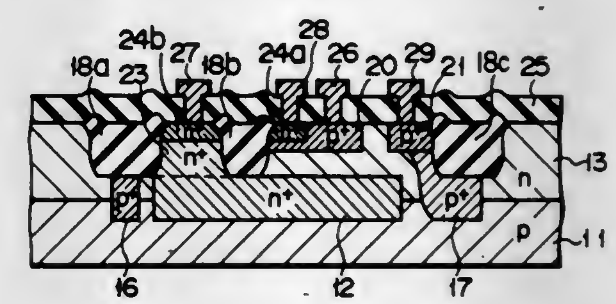

1. A method for producing a semiconductor device comprising the steps of selectively etching a part of a second conductivity type semiconductor layer formed on a first conductivity type semiconductor substrate where an isolating oxide layer is to be formed; introducing a first conductivity type impurity into a substrate contact forming part extending from the bottom of said etched part, by way of the side surface thereof, to the top surface of said second conductivity type semiconductor layer to form a substrate contact; thermally oxidizing said etched part to form an isolating oxide layer; and forming a semiconductor element in said second conductivity type semiconductor layer.

4,372,031
METHOD OF MAKING HIGH DENSITY MEMORY CELLS WITH IMPROVED METAL-TO-SILICON CONTACTS
Shyh-Chang Tsaur, Stafford, and Chang-Kiang Kuo, Austin, both of Tex., assignors to Texas Instruments Incorporated, Dallas, Tex.
Filed Mar. 21, 1980, Ser. No. 133,375
Int. Cl.³ H01L *21/28*
U.S. Cl. 29—571 **10 Claims**

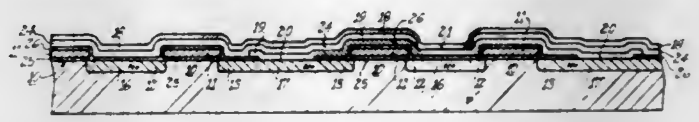

1. A method of making an array of memory cells in a face of a semiconductor body, each memory cell including an insulated gate field-effect transistor having a gate electrode and a source/drain path between source and drain regions; comprising the steps of:
applying a first layer of conductive material to said face and

patterning such layer to define said gate electrode of each of a plurality of said cells,
introducing conductivity-type determining impurity into said face adjacent said gate electrodes to define said source and drain regions of each of said cells,
applying a second layer of conductive material to said face insulated from said first layer and patterning it to define a connector segment which contacts said source or drain regions at a first contact area for each adjacent set of said cells, each connector segment extending across at least one of said first electrodes, and
applying a metal layer to said face insulated from the first and second layers except at second contact areas and patterning the metal layer to define a plurality of lines each of which extends across a plurality of adjacent sets of cells, the second contact areas being parts of said connector segment spaced from said first contact areas.

4,372,032

NORMALLY OFF INP FIELD EFFECT TRANSISTOR MAKING PROCESS

David A. Collins, and Derek L. Lile, both of San Diego, Calif., assignors to The United States of America as represented by the Secretary of the Navy, Washington, D.C.

Division of Ser. No. 72,399, Sep. 4, 1979. This application Mar. 30, 1981, Ser. No. 248,185

Int. Cl.³ H01L *21/24*

U.S. Cl. 29—571 6 Claims

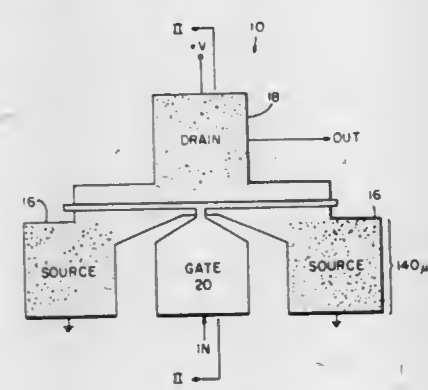

1. In a method for producing a normally off insulated gate field-effect transistor the steps of:
selecting a p-type single crystal indium phosphide substrate;
disposing a source contact and a drain contact spaced apart on said substrate;
disposing a layer of silicon dioxide over said substrate between said source and drain contacts; and
disposing a gate electrode on said layer of silicon dioxide completely bridging the space between said source and drain contacts.

4,372,033

METHOD OF MAKING COPLANAR MOS IC STRUCTURES

Samuel Y. Chiao, West Carrollton, Ohio, assignor to NCR Corporation, Dayton, Ohio

Filed Sep. 8, 1981, Ser. No. 300,318

Int. Cl.³ H01L *21/265*

U.S. Cl. 29—571 14 Claims

1. A process for forming a recessed oxide region in a portion of a semiconductor substrate comprising:
forming a silicon oxide layer on a surface of said substrate and a silicon nitride layer on a portion of said oxide layer and having edges defining an active area of the substrate;
forming a mask on said nitride layer having at least one edge projecting a predetermined distance beyond the nitride layer;
forming a layer of dopant in said substrate, the edge of said dopant layer being positioned relative to an edge of the nitride layer by said projecting edge of the mask; and
thermally oxidizing the substrate at a relatively low temperature of below approximately 800° C. converting the dop-

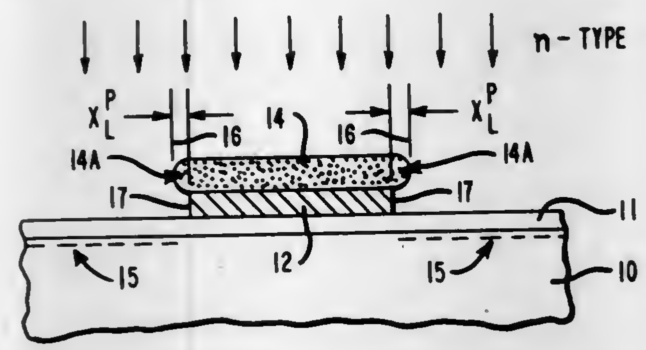

ant layer to an oxide region laterally outside said nitride layer.

4,372,034

PROCESS FOR FORMING CONTACT OPENINGS THROUGH OXIDE LAYERS

Mark T. Bohr, Aloha, Oreg., assignor to Intel Corporation, Santa Clara, Calif.

Filed Mar. 26, 1981, Ser. No. 248,013

Int. Cl.³ H01L *21/265, 21/31*

U.S. Cl. 29—577 C 10 Claims

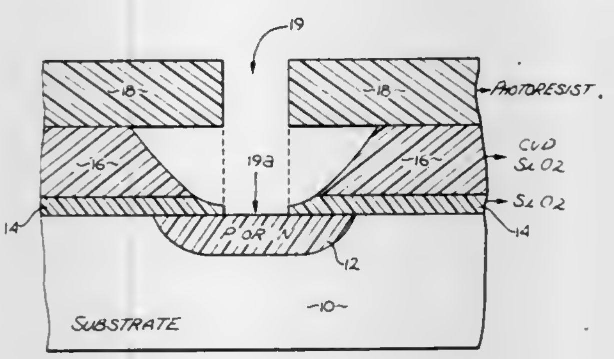

1. In the fabrication of an integrated circuit, where a substrate is covered with a thermally grown oxide layer and where a substantially thicker deposited oxide layer containing phosphorus is formed over the grown oxide layer, a process for forming an opening and tapered contact through the oxide layers to expose a region in the substrate comprising the steps of:
forming a photoresist layer over said deposited oxide layer with an opening through said photoresist layer over said region;
etching through said phosphorus containing deposited oxide layer with a wet etchant such that a tapered opening is formed through said deposited oxide layer extending to said grown oxide layer;
removing said photoresist layer; and,
forming an ohmic contact in said tapered opening through said oxide layers;
whereby a tapered contact is formed through said oxide layers.

4,372,035

METHOD FOR MAKING AN ELECTRIC MOTOR HOUSING WITH INTEGRAL POLE

Bobby E. McMillen, Columbus, Miss., assignor to AMBAC Industries, Incorporated, Farmington, Conn.

Division of Ser. No. 82,178, Oct. 5, 1979, Pat. No. 4,296,343. This application Mar. 3, 1981, Ser. No. 240,143

Int. Cl.³ H02K *15/14*

U.S. Cl. 29—596 5 Claims

1. A method of producing a housing for an electric machine having an armature and field poles comprising the steps of:
(a) selecting a section of tubular ferrous stock of suitable

length and sufficient thickness to provide mechanical stability when deformed and assembled with other structural members;
(b) deforming portions of the sidewalls of the selected tubular section to provide generally parallel flattened surfaces and inwardly projecting pole pieces which generally conform to the shape of the armature and are of the general size and shape required for induction effects to generate induced field poles; and

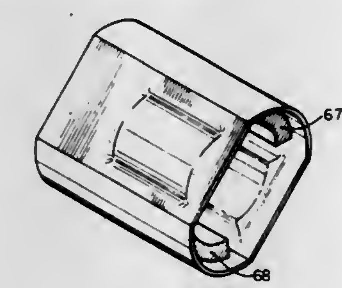

(c) securing magnetic field pole pieces in alternate circumferential positions between the inwardly projecting regions to provide a housing structure wherein the inner arcurate surfaces of the magnetic field poles and the inwardly projecting pole pieces are equally spaced radially with respect to the circumferential surface of the armature.

4,372,036

METHOD OF MANUFACTURING A SINGLE-TRACK VIDEO FERRITE RECORD/REPRODUCE HEAD

John F. Bagby, Encinitas, Calif., assignor to Spin Physics, Inc., San Diego, Calif.

Continuation of Ser. No. 734,698, Oct. 21, 1976, abandoned, which is a division of Ser. No. 668,873, Mar. 22, 1976, Pat. No. 4,017,899, which is a continuation-in-part of Ser. No. 519,358, Oct. 29, 1974, abandoned. This application Sep. 22, 1978, Ser. No. 944,685

Int. Cl.³ G11B *5/42*

U.S. Cl. 29—603 4 Claims

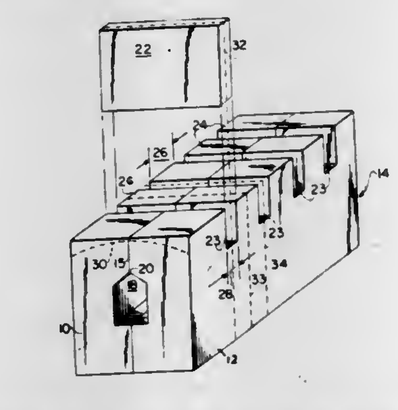

1. The method of manufacturing a structure for use in the manufacture of a narrow, single track, gap protected video magnetic record and/or reproduce head comprising the steps of:
(a) bonding two ferrite bars together, as least one of said bars being provided with a chamferred surface, said bonding being such that first and second predetermined gaps are maintained between said bars with the chamfer forming an elongated window between said bars;
(b) slotting said bonded bars across said first gap so as to produce aligned constant width ferrite abutments with track-defining edge walls bounded by said slots, the depth of said slots extending just into said window between said bars, but not extending so far into said elongated window between said bars that substantially the whole cross-section of said window is cut through;
(c) bonding thin ceramic wall support pieces, which are narrower than said abutments and which wear faster than said ferrite bars, in said slots of said bars and against said track-defining edge walls, said support pieces not substantially covering the cross-section of said elongated window because of the shallowness of said slots;
(d) machining said bonded bars and ceramic pieces to form a contoured, polished assembly; and
(e) dicing said assembly parallel to said edge walls and through said thin ceramic wall support pieces and the underlying ferrite to produce a discrete magnetic transducer structure having ceramic extending across and to the sides of said first gap thereof for supporting, and preventing the crumbling of, the track-defining edge walls of the ferrite.

4,372,037

LARGE AREA HYBRID MICROCIRCUIT ASSEMBLY

Robert Y. Scapple, Los Angeles; Frank Z. Keister, Culver City; Robert G. Grieger, Marina Del Rey, and Richard P. Himmel, Mission Viejo, all of Calif., assignors to Hughes Aircraft Company, Culver City, Calif.

Continuation of Ser. No. 774,298, Mar. 4, 1977, abandoned, which is a continuation-in-part of Ser. No. 554,787, Mar. 3, 1975, abandoned. This application Dec. 17, 1979, Ser. No. 104,471

Int. Cl.³ H01C *17/02*

U.S. Cl. 29—613 5 Claims

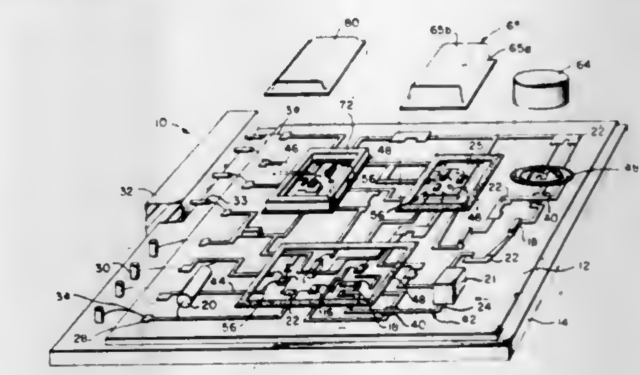

1. A method for fabricating a large area hybrid microcircuit assembly comprising the steps of:
placing thick film multilevel conductor, resistor and dielectric patterns on a substrate, including at least one selected area for later placing of electronic components to be hermetically sealed therein;
trimming all of the resistors in the patterns;
placing at least one closed loop of thick film dielectric material around the selected area, and over all input, output and ground leads extending from the patterns and terminating within the selected area;
placing a closed loop of thick film sealing metal over each dielectric material closed loop in which the sealing metal consists of a solderable composition which is compatible with the dielectric material;
securing a closed ring frame to each sealing metal closed loop by a first solder consisting of a composition which is sufficiently ductile for militating against fracture and leakage thereof;
electrically and mechanically securing any discrete electrical components to the patterns and the substrate outside of the selected area;
mounting the electronic components to the substrate within the selected area and the closed ring frame, and electrically coupling the components to the input, output and ground leads therein;
sealing a cover to each closed ring by a second solder consisting of a composition which is capable of forming a hermetic seal and withstanding thermal and mechanical shock and repeated temperature cycles such as from −65° to 150° C., and which has a melting point lower than the first solder, and providing a non-reactive environment within the sealed selected area for safeguarding the elec-

tronic components from otherwise degrading environment; and
electrically and environmentally testing the assembly.

4,372,038
METHOD FOR ASSEMBLING AN ELECTROCHEMICAL CELL
Franz Goebel, Sudbury, Mass., assignor to GTE Products Corporation, Stamford, Conn.
Filed Jul. 23, 1981, Ser. No. 286,217
Int. Cl.³ H01M *2/06*
U.S. Cl. 29—623.2 **14 Claims**

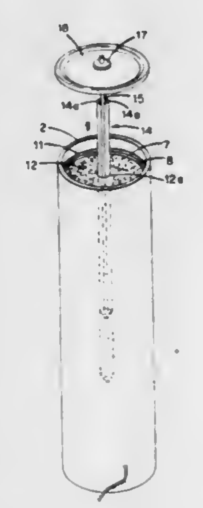

1. A method for assembling a carbon current collector cathode structure for an electrochemical cell, comprising the steps of:
providing an elongated porous carbon element having a guide opening extending therealong for a portion of its entire length;
providing a unitary metal current collector element comprising first and second elongated, spaced-apart, tapered, resilient spring members having a pair of spaced-apart free ends and an opposing pair of ends joined together and defining a tapered central opening between the spring members and a generally V-shaped, tapered form for the current collector element;
securing the free ends of the current collector element to a feedthrough member having a cover attached thereto thereby to provide a rigid assembly jointly with the current collector element;
introducing the current collector element into the guide opening in the porous carbon element; and
pushing the assembly of the cover, the feedthrough member, and the current collector element along the porous carbon element thereby to cause the current collector element to penetrate the material of the carbon element beyond the termination of the guide opening in the carbon element and thereby embed the current collector element within the carbon element, said current collector element being dimensioned relative to the guide opening in the carbon element to exert an outwardly directed force by way of the spring members against internal portions of the carbon element when the current collector element has been embedded within the carbon element.

4,372,039
COIL GUIDE MEMBER FOR COIL INSERTION TOOL
Curtis R. Bailey, Dayton, Ohio, assignor to Machine Products Corporation, Dayton, Ohio
Filed Dec. 29, 1980, Ser. No. 220,914
Int. Cl.³ H02K *15/06*
U.S. Cl. 29—734 **11 Claims**

1. In apparatus for insertion of a pre-wound coil of electrical conductor wire into an electric machine stator provided with spaced-apart internal teeth forming slots therebetween, a coil guide member, the coil guide member being positioned in juxtaposition with one of the teeth of the stator along the length thereof to guide a portion of a coil of wire into a slot adjacent said one of the teeth, the coil guide member comprising an elongate body provided with a channel therein which extends substantially the length thereof, a wire protector member having a part within the channel and extending substantially the length of the channel, the wire protector member having flexible projections extending from the channel and in covering relationship with portions of the tooth with which the coil guide member is in juxtaposition, for protection of a coil as the coil is guided by the coil guide member into a slot adjacent the tooth.

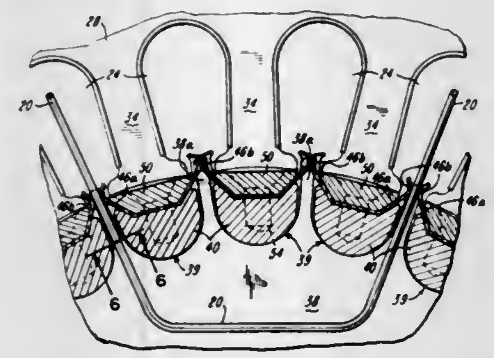

4,372,040
TOOL FOR PRESS-FITTING A PLURALITY OF CONNECTOR TERMINALS
Thomas J. Wickham, Lakeville, Minn., assignor to Magnetic Peripherals Inc., Minneapolis, Minn.
Division of Ser. No. 115,839, Jan. 28, 1980, Pat. No. 4,316,321. This application Aug. 10, 1981, Ser. No. 291,684
Int. Cl.³ B23P *19/00*
U.S. Cl. 29—741 **4 Claims**

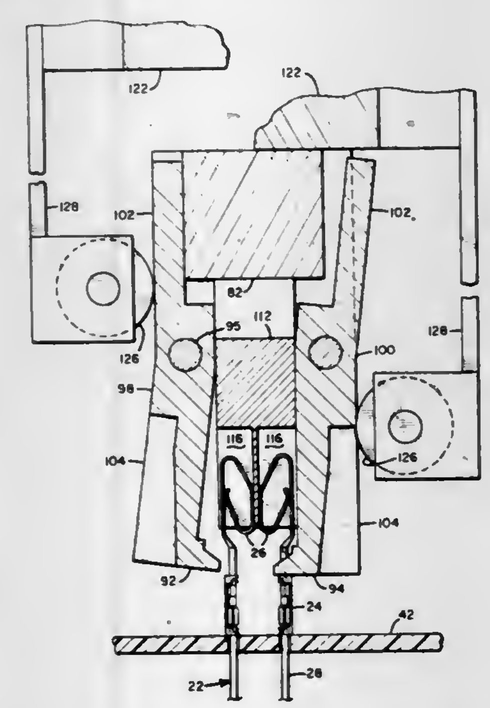

1. A tool for press-fitting a plurality of connector terminals to a substrate, said terminals being arranged in a pair of rows with the terminal pairs having contact heads facing each other, the shanks of said terminals being inserted into respective apertures within said substrate, said shanks each having an enlarged section for press-fitting into the respective aperture, said tool comprising:
a first member;
first and second cam members pivotally mounted to said first member for movement between a rest position and an actuated position, said cam members having a plurality of notches each receiving a portion of a respective shank of one of said terminals when said cam members are in their actuated position;
cam operator means supported by said first member for moving said first and second cam members from their rest to their actuated position; and
a second member supporting said first member in sliding relation so that upon positioning said tool over the terminals, operation of said cam operator means moves said first and second cam members to their actuated position so that a portion of each of the shanks of said terminals is received in individual ones of said notches above said enlarged section, and subsequent movement of said first member downwardly toward said substrate will cause said cam members, carried by said first member, to engage an upper surface of each of said enlarged sections to force said terminals downward and to press said enlarged section into the respective aperture.

4,372,041
WIRE CONVEYING CLAMP AND APPARATUS FOR ASSEMBLY OF ACCURATELY SIZED WIRE ENDS TO A TERMINAL
John H. Winkelman, Hartland, Wis., assignor to Artos Engineering Company, New Berlin, Wis.
Filed Mar. 19, 1981, Ser. No. 245,252
Int. Cl.³ H01R *43/04*
U.S. Cl. 29—747 **23 Claims**

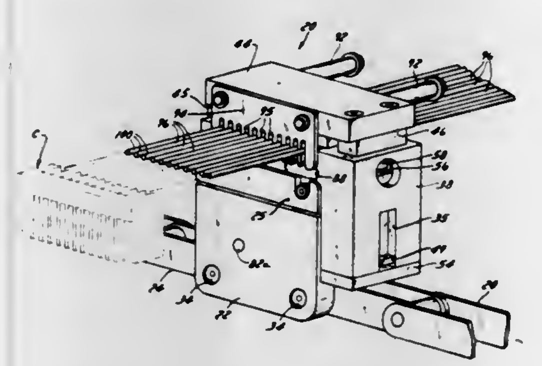

1. A wire conveying clamp assembly for use in an apparatus for high-speed assembly of free ends of accurately sized wire leads to the terminals in a connector and of the type having an endless chain mounted on a pair of sprockets for rotation of said chain in a flat, orbital path, a plurality of said clamp assemblies secured to said chain for movement therewith, each of said assemblies including a side plate support fixedly attached to said chain, said side plate support having a clamp housing slidably attached thereto, said clamp housing being slideably mounted on and movable along said support in a direction parallel to the path of movement of said chain, said housing further having a vertically movable clamp arm slidably mounted thereon; said clamp arm having guide pin means slideably engaged therein, a comb attached to one end of said pin means and engaging said wire leads, pusher means for moving said comb and said guide pin means transversely relative to said chain path to thereby cause separation of said free ends of said wire leads.

4,372,042
METHOD FOR MANUFACTURING DIAMOND PICK-UP STYLUS
George F. Hughes, Palm Beach Gardens, Fla., assignor to Diamagnetics, Inc., West Palm Beach, Fla.
Filed Sep. 12, 1980, Ser. No. 186,682
Int. Cl.³ H01R *43/00*; B24B *1/00*; B28D *5/04*
U.S. Cl. 29—825 **4 Claims**

1. A method for forming a pick-up stylus for playing back pre-recorded signals on a record disc, said method comprising the steps of:
(a) providing a pair of elongated jewel elements, each of said elements having a generally flat surface extending parallel to the longitudinal axis of said element;
(b) joining said jewel elements along said flat surfaces whereby to form an elongated work product having a forward end;
(c) rough grinding said work product forward end to a conical surface;

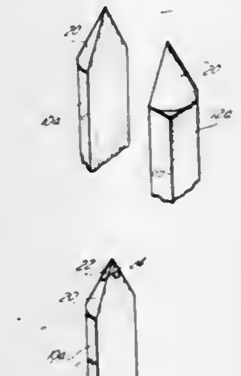

(d) separating said work product along said joined flat surfaces into two jewel elements each having a semi-conical surface at the forward end thereof; and,
(e) fine grinding pair of planes onto each jewel element semi-conical surface, said planes extending from said jewel element flat surface and intersecting along a line defining a record engaging edge.

4,372,043
METHOD OF ASSEMBLING A GAS-INSULATED POWER TRANSMISSION LINE WITH DUTER ENCLOSURE OF CARBON STEEL AND ALUMINUM
Alan H. Cookson, Churchill Borough, Pa., assignor to Westinghouse Electric Corp., Pittsburgh, Pa.
Filed Nov. 14, 1980, Ser. No. 206,919
Int. Cl.³ H02G *1/00*; H01B *9/06*; H02G *5/06*
U.S. Cl. 29—828 **1 Claim**

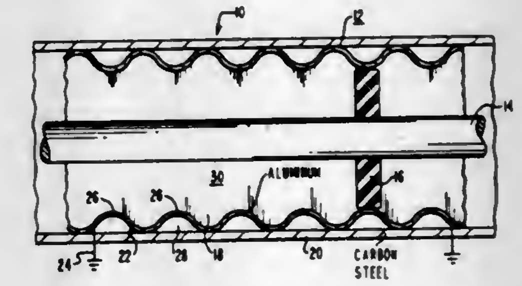

1. A method of assembling a high-voltage, gas-insulated power transmission line comprising the steps of:
forming a gas-tight cylindrical outer sheath of carbon steel;
placing the outer sheath in its final installation location;
inserting an insulatably supported inner conductor in a cylindrical aluminum inner sheath in a manufacturing facility to form an inner sheath-inner conductor assemblage;
transporting the inner sheath-inner conductor assemblage to the location of said outer sheath; and sequentially
inserting said inner sheath-inner conductor assemblage in said outer sheath after said outer sheath has been placed in its final installation location;
grounding said inner sheath; and
inserting an electrically insulating gas in said outer sheath.

4,372,044

METHOD OF AND APPARATUS FOR STRAIGHTENING TERMINAL PINS

William M. Chisholm, Midlothian, Va., assignor to Western Electric Company, Inc., New York, N.Y.

Filed Oct. 31, 1980, Ser. No. 202,805

Int. Cl.^{3} H05K *3/22;* **B23P** *19/00;* **B21F** *1/02*

U.S. Cl. 29—845 **19 Claims**

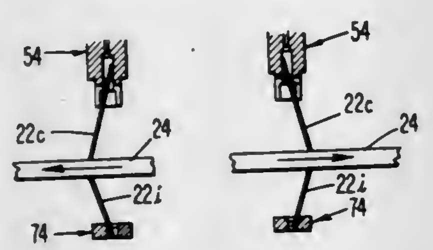

1. A method of straightening an elongated pin having an intermediate portion and first and second opposite end portions, comprising the steps of:
gripping the pin in a gripping means;
causing relative movement between a substrate and the gripped pin to insert the pin into the substrate;
maintaining the gripping means about at least a tip portion of the first end portion; and
causing relative reciprocating movement between the intermediate portion of the pin in the substrate and tip portions of the first and second opposite end portions of the pin to flex and coldwork the first and second opposite end portions of the pin in a lateral direction is simultaneously.

4,372,045

METHOD OF MANUFACTURING ELECTROSTATIC WRITE HEAD

Pol A. G. J. Gustin, and Raymond G. G. Schayes, both of Brussels, Belgium, assignors to U.S. Philips Corporation, New York, N.Y.

Division of Ser. No. 124,155, Feb. 25, 1980, Pat. No. 4,300,146, which is a continuation of Ser. No. 962,265, Nov. 20, 1978, abandoned. This application Feb. 11, 1981, Ser. No. 233,425

Claims priority, application Belgium, Dec. 8, 1977, 183,188

Int. Cl.^{3} H05K *3/00*

U.S. Cl. 29—846 **9 Claims**

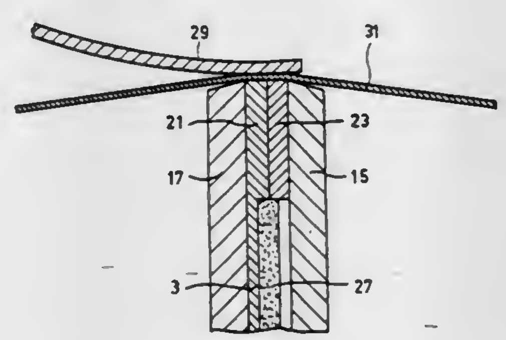

8. A method of manufacturing an electrostatic write head having a medium scanning end, comprising the steps of:
providing an insulating plate having one side which is substantially planar;
providing a plurality of printed circuit-type conductor tracks on said one side of said plate, said conductor tracks each terminating in a strip-shaped region on said plate, successive laterally adjacent conductor tracks entering said strip-shaped region from opposite directions, the parts of said conductor tracks situated inside said strip-shaped region extending parallel to each other, and the parts of said conductor tracks situated outside said strip-shaped region forming connection conductors;
dividing said plate into first and second sections along a dividing line which extends through said strip-shaped region perpendicularly to and through each of said conductor tracks in said strip-shaped region, thereby forming two ends on each conductor track proximate to said dividing line;
rotating said first and second sections towards each other around said dividing line so that the sides thereof accommodating conductor tracks face each other, said ends of said conductor tracks proximate to said dividing line constituting the medium scanning end portion of the electrostatic write head;
providing an insulating layer between a portion of said first and second sections intermediate said conductor tracks at an area spaced from said dividing line, and
adhesively joining said rotated first and second sections together, thereby providing an integral head.

4,372,046

METHOD OF MAKING A SWITCHING ELECTRODE PORTION OF A PCB

Keiichi Suzuki, Tokyo, Japan, assignor to Kabushiki Kaisha Daini Seikosha, Japan

Continuation-in-part of Ser. No. 935,097, Aug. 21, 1978, abandoned. This application Oct. 10, 1980, Ser. No. 195,930

Claims priority, application Japan, Aug. 24, 1977, 52-113129[U]

Int. Cl.^{3} H01K *3/10*

U.S. Cl. 29—852 **7 Claims**

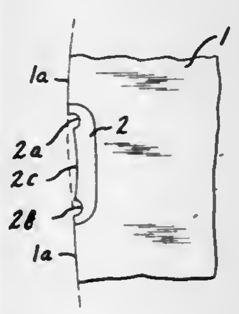

1. A method of forming an electrode on a peripheral surface portion of a circuit board, comprising:
providing a base plate for a circuit board having a pair of major surfaces and a narrow peripheral surface extending between said pair of major surfaces;
forming through said base plate two small holes spaced a certain distance from each other and each extending between the pair of major surfaces of said base plate;
forming through said base plate a large hole having a diameter greater than the distance between the two small holes and which intersects the two small holes;
plating with a conductive layer inner surfaces of said base plate defining the two small holes and only that portion of the surface of said base plate defining the large hole which is between the two small holes, wherein said conductive layer defines an electrode; and
removing the portion of said base plate containing the unplated portion of said large hole opposite said conductive layer so that the surface portion of said base plate on which said conductive layer is plated is a peripheral edge portion of said base plate and said conductive layer defines an electrode on a peripheral edge portion of said base plate.

4,372,047

DISPENSING MEANS FOR SAPLING CONTROL SUBSTANCE CONNECTED WITH A LAND CLEARING SAW

Toivo Marttinen, Puntala, Finland, assignor to Enso-Gutzeit Osakeyhtiö, Helsinki, Finland

Filed Dec. 11, 1980, Ser. No. 215,408

Int. Cl.^{3} B27B *9/00*

U.S. Cl. 30—123.3 **3 Claims**

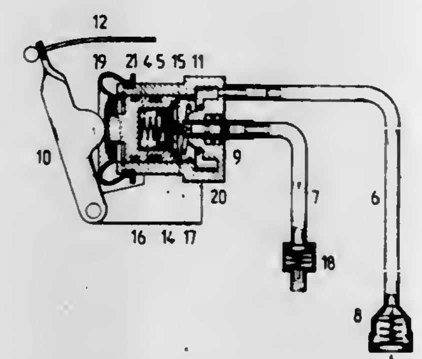

1. Improvement in a connection with a land clearing saw, a sapling control substance dispensing means comprising a container for the sapling control substance, a control substance nozzle and a control substance duct leading from the container to the nozzle, this duct incorporating a manually operable valve comprising a piston provided with return spring and a cylinder, with ports for the control substance entry duct and exit duct, these ducts being provided with check valves, wherein the improvement comprises that within the piston has been installed an auxiliary piston loaded with a spring and which as the piston is being moved opens or closes a needle valve associated with the exit duct port.

4,372,048

OPTICAL FIBER CLEAVER WITH PULLER

Rocco F. Basile, Roselle; Kenneth P. Blum, Colonia, both of N.J., and John M. Cole, New Hope, Pa., assignors to Thomas & Betts Corporation, Raritan, N.J.

Filed Jan. 14, 1980, Ser. No. 111,845

Int. Cl.^{3} A21C *5/08;* **B25F** *3/00*

U.S. Cl. 30—124 **12 Claims**

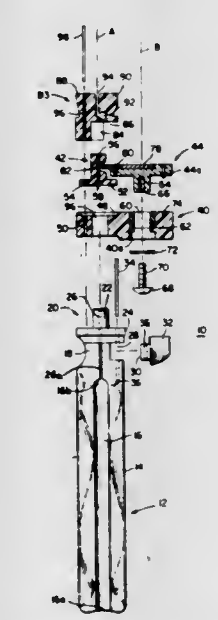

1. Optical fiber cleaving apparatus comprising:
fiber support means for supporting a fiber non-rotatively thereon;
fiber cleaving means supported by said fiber support means and having a cutting element movable transversely relative to the axis of said fiber, and means limiting such cutting element movement such that only a portion of the periphery of said fiber is intersected upon movement of said cutting element;
means supported by said support means at one side of said cleaving means for holding said fiber in a fixed longitudinal position; and
pulling means supported by said support means at the opposite side of said cleaving means for grasping said fiber and pulling said fiber in a longitudinal direction during said holding of said fiber and subsequent to cleaving thereof.

4,372,049

FRAMING LAYOUT METHOD AND DEVICE

Utah Hogue, 11417 Seagoville Rd., Balch Springs, Tex. 75180

Filed Jun. 29, 1981, Ser. No. 278,174

Int. Cl.^{3} B43L *13/00*

U.S. Cl. 33—36 **7 Claims**

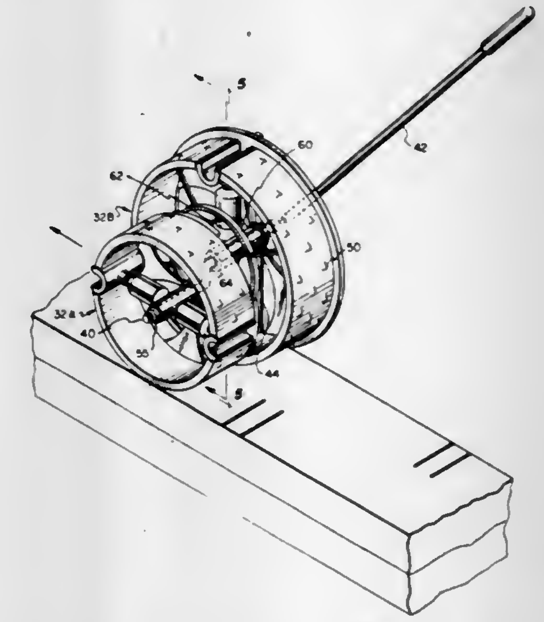

1. A multi-wheeled framing layout device comprising:
at least two eccentrically mounted, adjacent wheels of differing diameters, each said wheel having a hub, a periphery, and a substantially open means for support connecting said periphery to said hub;
an axle rotably engaging said hubs;
an offset in said axle set between said adjacent wheels;
said offset disposing the wheels in said eccentrically mounted relation and with the periphery of said adjacent wheels into an alignment orientation for simultaneously rolling said wheels in contact with a single planer surface;
means for securing said wheels upon said axle;
a handle attached to an end of said axle in a nonrotable connection; and
means for marking said planer surface at the periphery of each of said wheels.

4,372,050

PANEL MARKING CONSTRUCTION

Elroy C. Eisenhauer, 775 Tifft St., Buffalo, N.Y. 14220

Filed Jun. 12, 1978, Ser. No. 914,441

Int. Cl.^{3} G01B *3/14*

U.S. Cl. 33—174 G **5 Claims**

1. A templet construction for marking a portion on the rear of a member to be mounted on a substructure comprising a templet of a predetermined shape fabricated from flexible sheet-like material, a first area of pressure-sensitive adhesive on said templet, a second area of pressure-sensitive adhesive of lesser size than said first area for attaching said templet to said substructure with said first area facing away from said substructure so that said first area will adhere to said rear of said member when said member is pressed against said first area facing away from said substructure, said second area being a continuation of said first area on the same side of said sheet-like

material as said first area, said templet being bendable between said first and second areas to cause said first and second areas to face in opposite directions whereby said second area can be pressed against said substructure with said first area facing

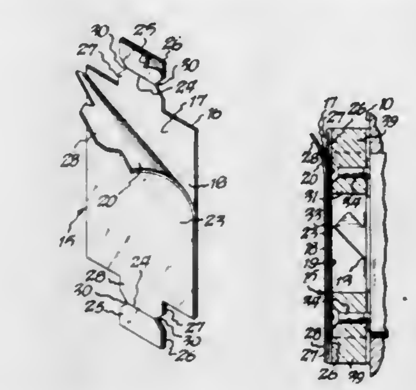

away from said substructure toward said member, and locating means for providing a demarcation between said first and second areas to thereby facilitate the bending back of said second area relative to said first area, said locating means comprising V-shaped cutouts facing each other.

4,372,051
SPARK PLUG WIRE GAUGE
Richard F. Cocklin, 3226 Diamond St., NE., North Canton, Ohio 44721
Filed Aug. 31, 1981, Ser. No. 297,783
Int. Cl.³ G01B *5/02*
U.S. Cl. 33—174 R **12 Claims**

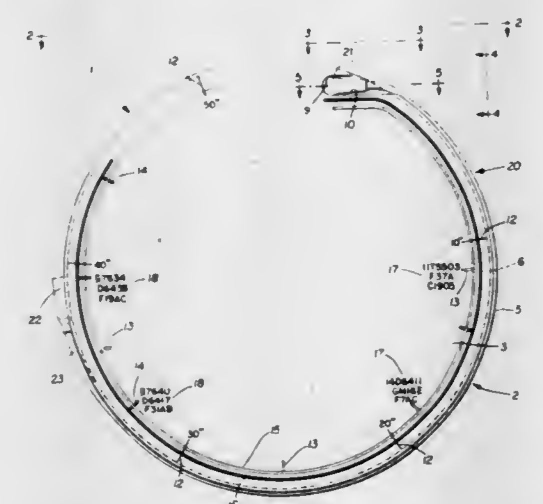

10. A device for measuring spark plug wires including:
(a) a body;
(b) spark plug wire holding means formed on the body for detachably holding a spark plug wire in a predetermined curved path along said body; and
(c) marking means provided on the body at predetermined spaced locations with respect to the spark plug wire holding means for indicating the length of a spark plug wire extending along the curved path.

4,372,052
DEVICE FOR INDICATING DIRECTION TO A PREDETERMINED LOCALE
Edmond K. Wakim, P.O. Box 8, Hazmieh, Lebanon
Filed Nov. 7, 1980, Ser. No. 204,868
Int. Cl.³ G01C *9/00, 17/14*
U.S. Cl. 33—349 **5 Claims**

1. In a device for indicating the direction of a predetermined locale from a specific geographic location at any point in the world, a compass having a magnetic needle pivotally mounted on a pivot, a plurality of azimuth cards and each card representing a particular geographic region, there being a plurality of indicia markings on each card corresponding to specific geographic locations in said region, said azimuth cards each having an opening therein to accommodate the magnetic needle when a said card is positioned on the compass such that each card is selectively positionable upon said compass in a predetermined relationship to said magnetic needle corresponding to the specific geographic location at which the device is being used with respect to a North-South reference, means for orienting a said azimuth card on said compass with respect to said magnetic needle, a transparent adjustable straight-line cursor pivotally mounted upon a pivot coinciding with the pivot of the compass magnetic needle and having a

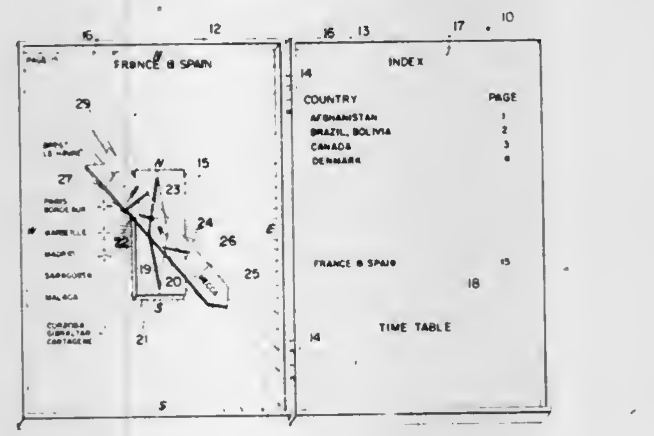

straight line thereon to be aligned with said magnetic needle pivot and with a said indicia marking on a said azimuth card which is positioned upon the compass whereby the cursor will indicate the direction of the predetermined locale from said specific geographic location when said compass magnetic needle is aligned with the North-South reference, said cursor having a head end which points to the predetermined locale and a tail end which is aligned with an indicia marking on the card, one of said head end and tail end being foldable and the other of said head end and tail end being slidable to decrease the length of the cursor when positioning a card upon the compass.

4,372,053
DRYER FOR PARTICULATE MATERIAL
Robert J. Anderson, and Glenn E. Hall, both of Toledo, Ohio, assignors to The Andersons, Maumee, Ohio
Filed Nov. 21, 1980, Ser. No. 209,140
Int. Cl.³ F26B *3/16, 17/14*
U.S. Cl. 34—11 **30 Claims**

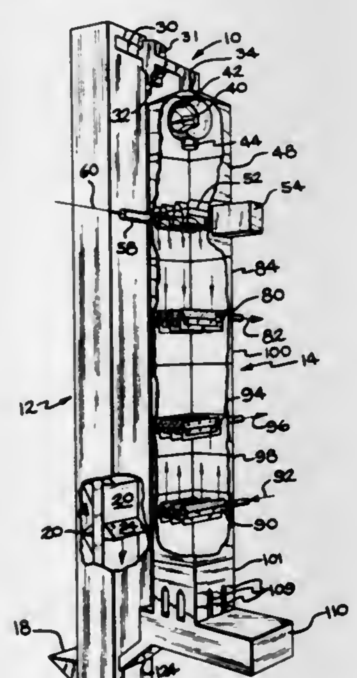

1. Method of drying particulate material comprising:

filing an enclosed chamber with a batch of particulate material to be dried;
passing the batch of particulate material through the enclosed chamber;
introducing a heated fluid into at least one portion of the enclosed chamber defining a heating zone to heat and absorb moisture from the particulate material, whereby the heated fluid absorbs a portion of the moisture to be removed from the particulate material as the particulate material moves though the heating zone;
introducing a heated fluid into at least one portion of the enclosed chamber defining a cooling zone to cool and absorb moisture from the heated particulate material whereby the cooling fluid absorbs a portion of the moisture to be removed from the particulate material as the particulate material moves through the cooling zone; and
continuously recirculating the particulate material of the batch through the enclosed chamber to progressively remove moisture from the particulate material, the particulate material being recirculated through the chamber until the desired degree of drying is achieved in substantially the entire batch of particulate material.

4,372,054
METHOD AND MEANS FOR PROGRAMMING THE OPERATION OF AN APPARATUS
Daniel I. Pomerantz, Lexington, Mass., and Richard V. Baxter, Jr., Indianapolis, Ind., assignors to Emhart Industries, Inc., Indianapolis, Ind.
Filed Feb. 2, 1981, Ser. No. 230,736
Int. Cl.³ F26B *21/06*
U.S. Cl. 34—44 **12 Claims**

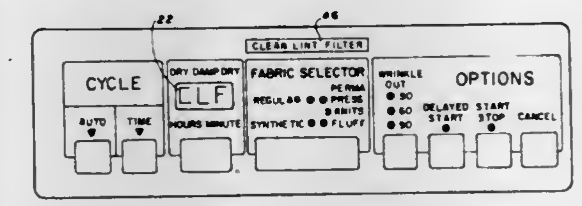

1. An apparatus having at least a plurality of different control functions, comprising:
a control panel including a plurality of separate portions each of which corresponds to a different said control function;
means for causing said control panel to appear blank prior to initial activation of said apparatus;
means for initially activating said apparatus; and
means responsive to said means for initially activating for indicating and allowing selection of said different control functions, said means for indicating and allowing selection including means for sequentially displaying said control functions in their respective control panel portions to allow sequential selection thereof, said means for sequentially displaying including means for sequentially illuminating each of said portions of said control panel in response to said means for initially activating and in response to selections of control functions corresponding to illuminated control panel portions, said selected control functions remaining illuminated during the sequential illumination of further portions of said control panel.

4,372,055
THERMAL INSULATION END PANEL MOUNTING BRACKET ASSEMBLY FOR PAPER MACHINE DRYER CYLINDER
Fred H. Alexy, Glens Falls, N.Y., assignor to AMG Industries, Inc., Glens Falls, N.Y.
Filed May 1, 1981, Ser. No. 259,778
Int. Cl.³ F26B *13/08*
U.S. Cl. 34—110 **8 Claims**

1. An end panel mounting bracket assembly for mounting a planar thermal insulation panel onto an exposed end of a paper dryer drum or the like, said drum comprising an elongated metal cylinder, dryer head end bells carried on respective ends of said cylinder and being bolted thereto by a plurality of drum head bolts at spaced circumferential positions along said end bells and with the bolt heads at spaced circumferential positions along said end bells and with the bolt heads projecting from the face of the end bells, said mounting bracket assembly comprising:

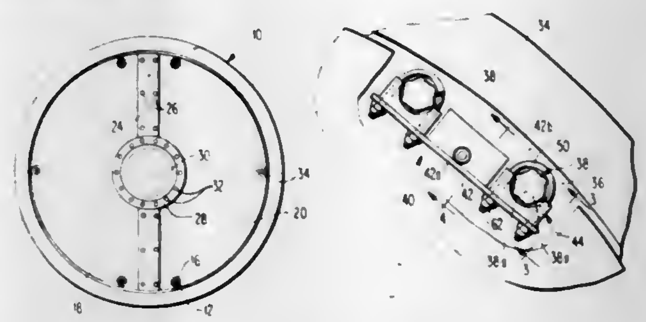

an elongated bracket member separate from said insulation panel and spanning between two spaced bolt heads to define at least one accurate panel fixing point delimited by both of said bolt heads,
at least one clamp member fixed to said bracket member and surrounding one of said bolt heads and being frictionally clamped thereabout, and
means for detachably fixedly mounting said panel within the end of said cylinder and to one of said members, overlying said members and spanning across the end of said cylinder.

4,372,056
TREADS
Florence Benaquista, 524 Lincoln Ave., Pittsburgh, Pa. 15202
Filed Jan. 2, 1981, Ser. No. 222,725
Int. Cl.³ A43B *3/10, 15/00*
U.S. Cl. 36—7.7 **1 Claim**

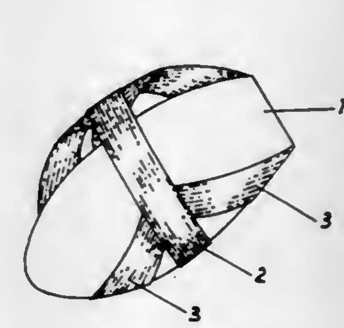

1. A pair of non-skid half soles having a non-skid outer tread design to prevent slipping and falling on icy streets, elastic strap means inter-connecting extended side portions of each of said half soles, said elastic strap means comprises a single strap for each half sole and a pair of angularly extending straps on each side of the half sole connected to the front and rear portions of said half sole, said flexible strap means being foldable to enable carrying of said half soles in a compact package.

4,372,057
INSOLE
Olympia Nielsen, 333 E. 66th St., New York, N.Y. 10021
Filed Jul. 10, 1980, Ser. No. 167,243
Int. Cl.³ A43B *3/10, 13/38*
U.S. Cl. 36—10 **1 Claim**

1. An improved moisture absorbing foot covering comprising the combination of:
a woven foot sock having integral sole and upper portions;
a moisture absorbing resilient insole of cellular material

positioned within said sock and substantially covering the inner surface of the sole of said sock; and

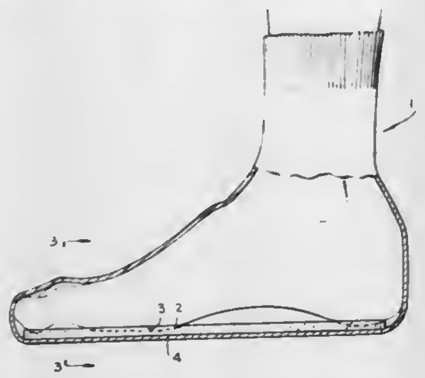

said insole being shaped to generally conform to the shape of the sole of a human foot.

4,372,058
SHOE SOLE CONSTRUCTION
Jerry D. Stubblefield, 12225 NW. Big Fir Ct., Portland, Oreg. 97229
Continuation of Ser. No. 935,584, Aug. 21, 1978, abandoned, which is a continuation-in-part of Ser. No. 853,482, Nov. 21, 1977, abandoned. This application Sep. 10, 1980, Ser. No. 185,957
Int. Cl.³ A43B *13/04, 13/18, 13/26, 5/00*
U.S. Cl. 36—32 R **43 Claims**

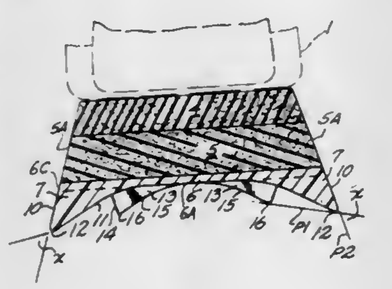

1. An outer sole for an athletic shoe, which comprises:
a lower surface bounded by a peripheral portion having an outer edge;
means for dissipating shock away from the foot and leg of a wearer comprising a plurality of tread members extending integrally from and disposed about said peripheral portion of said lower surface for supporting said lower surface in a cantilever fashion, certain of said tread members having a vertical section that forms an obtuse triangle having a lowermost apex that extends laterally beyond said outer edge of said outer sole for spreading laterally outwardly upon foot-initiated ground impact.

4,372,059
SOLE BODY FOR SHOES WITH UPWARDLY DEFORMABLE ARCH-SUPPORTING SEGMENT
Frank Ambrose, 5805 Washington St., Apt. #17, Hollywood, Fla. 33023
Filed Mar. 4, 1981, Ser. No. 240,484
Int. Cl.³ A43B *13/04, 13/18*
U.S. Cl. 36—32 R **6 Claims**
1. In a shankless sole body for shoes having:
a heel-supporting rear segment with a top face and a bottom face;
an arch-supporting middle segment of deformable resilient material extending forward from said rear segment and having a top face and a bottom face merging smoothly with said top and bottom faces of said rear segment;
and a toe-supporting front segment extending forward from said middle segment and having a top face and a bottom face merging smoothly with the top and bottom faces of said middle segment;
the improvement wherein:
said top face of the middle segment is convex longitudinally of the sole across substantially its complete width and projects above the respective planes of the top face of said rear segment and the top face of said front segment, said bottom face of said middle segment is convex longitudinally of the sole across substantially its complete width and projects below the bottom faces of said rear and front segments, said middle segment at any point thereon longitudinally of the sole has a substantially uniform vertical thickness across its complete width, and said middle segment is resiliently deformable under the wearer's weight to flatten its bottom face and push its top face up against the arch of the wearer's foot to redistribute the wearer's weight onto the arch.

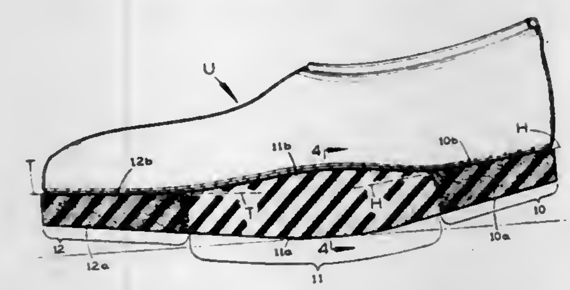

4,372,060
CONSTRUCTION OF TONGUE FOR SHOE OR THE LIKE ARTICLE
Jaroslav F. Adamik, Santa Ana, Calif., assignor to MCF Footwear Corporation, New York, N.Y.
Filed Oct. 6, 1980, Ser. No. 194,413
Int. Cl.³ A43B *23/26*
U.S. Cl. 36—54 **4 Claims**

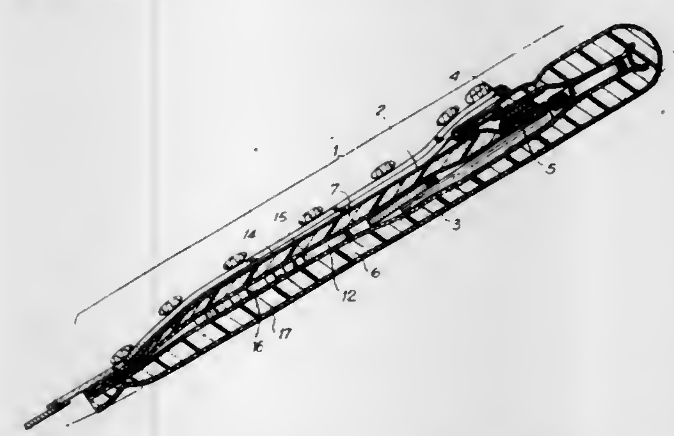

1. A tongue for use with an article of footwear, in the form of a receptacle, including a first lower member and a second overlaying member, said members having their side portions joined together, the upper portion of said first overlaying member having separable fastener closure means affixed thereto and the upper portion of said lower member having an integrally formed flap member having mating separable fastener closure means affixed thereto so as to facilitate selective separable mating of said fastener closure means to provide selective access to said receptacle, said upper portion of said first and second members extending above the upper lace line of the footwear, and cushioning means formed as part of said first and second members and being disposed beneath an outer surface portion of each of said overlaying members so as to surround an article placed within said receptacle.

4,372,061
DEVICE FOR ADJUSTING THE FLEXIBILITY OF A SKI BOOT OR THE LIKE ARTICLE
Alessandro Pozzobon, Treviso, Italy, assignor to Nordica S.p.A., Montebelluna, Italy
Filed May 4, 1981, Ser. No. 260,153
Claims priority, application Italy, May 23, 1980, 21895 B/80
Int. Cl.³ A43B *5/04*
U.S. Cl. 36—117 **4 Claims**

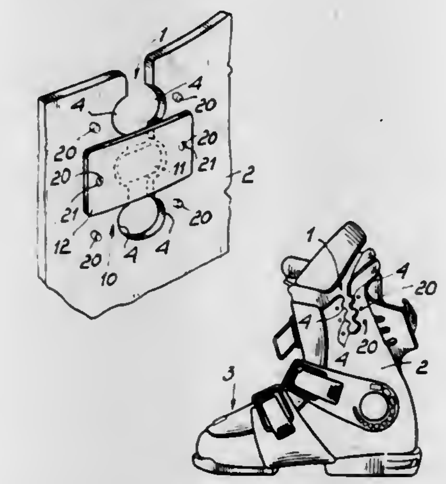

1. In a ski boot or the like, a device for adjusting the flexibility thereof, comprising at least one longitudinally extending cut provided at the top free end of the shell of the ski boot, characterized in that it further comprises, formed in the edges of said cut, a plurality of oppositely located pairs of notches, there being further provided a stiffening member adapted for removable insertion through one of said notch pairs and preset to adjust the degree of flexibility in said ski boot shell.

4,372,062
SKI BOOT
Robert D. Tringali, New York, N.Y., assignor to Joel H. Eisenberg, Stratford, Conn.
Filed Dec. 29, 1980, Ser. No. 220,778
Int. Cl.³ A43B *5/04*
U.S. Cl. 36—120 **27 Claims**

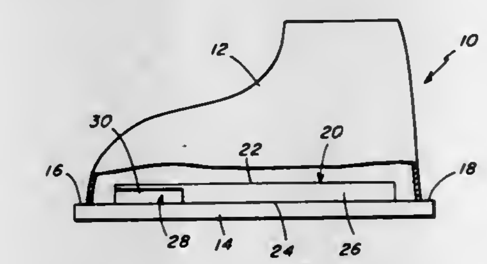

1. A ski boot comprising:
an outer boot, and
an insert,
said insert supporting the foot of a skier and having means for transmitting forward pressure exerted by the foot in the anterior progression plane into pressure on the antero-medial region thereby weighting the inboard edge of a ski attached to said boot.

4,372,063
BRUSH CLEARING APPARATUS FOR A BULLDOZER BLADE
Casey N. Work, P.O. Box 306, Dunlap, Calif. 93621
Filed Mar. 30, 1981, Ser. No. 249,183
Int. Cl.³ A01B *13/00*
U.S. Cl. 37—2 R **7 Claims**
1. A brush clearing apparatus for mounting on a bulldozer blade or the like, the blade having an upper edge, a lower edge, a bulldozing face extended transversely of a predetermined longitudinal direction of bulldozing movement to engage materials being bulldozed when the blade moves in such direction, and a face opposite of the blade from the bulldozing face, the apparatus comprising:
A. a rake which has a plurality of transversely spaced rake teeth and is mounted on the blade in an attitude in which the teeth extend in said direction from the bulldozing face and downwardly from the lower edge;
B. a clamp mounted on the blade for pivotal movement about a transversely extending clamp axis which is adjacent to the upper edge of the blade, the clamp having a distal portion which is spaced from the axis substantially

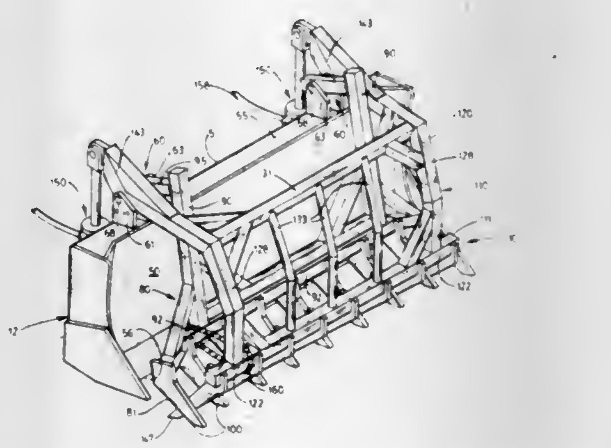

the distance between the axis and the lower edge and teeth which extend from the distal portion and are disposed transversely in alternating spaced relation between the rake teeth, the clamp being adapted to pivot about the axis between a lowered position, in which the distal portion is longitudinally adjacent to the bulldozing face and is elevationally adjacent to the lower edge and in which the rake teeth and the clamp teeth are disposed in interfitted relation, and a raised position in which the distal portion and clamp teeth are disposed substantially upwardly of the upper edge; and
C. power means connecting the clamp and the blade selectively for pivoting the clamp toward the lowered position and toward the raised position.

4,372,064
POWER LAWN MOWER WITH DUMPING RECEPTACLE
Louis Benenate, c/o George Spector, 3615 Woolworth Bldg., 233 Broadway, and George Spector, 3615 Woolworth Bldg., 233 Broadway, both of New York, N.Y. 10007
Filed Feb. 2, 1981, Ser. No. 230,665
Int. Cl.³ E02F *3/02*
U.S. Cl. 37—117.5 **3 Claims**

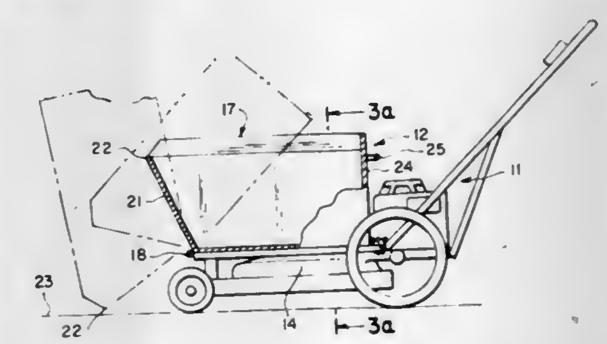

1. A high wheel dumpster assembly, comprising in combination, a high wheeled rotary power lawn mower, and a dumpster mounted thereupon comprising a frame bolted thereto and a hopper pivotably mounted on a front end of said frame, and means for said hopper to be used for bulldozing work wherein said hopper includes a handle at one end for tilting said hopper wherein said means comprises a scoop

pivotably secured to said hopper and forming an end wall thereof pivotable relative to said hopper to an outward position and to an inward position including means for locking said scoop in said inward position.

4,372,065
BLOWER FOR A PRESSING TABLE
Jutta Riba nee Hildebrand, Rosenbergstr. 26, D-5455 Hardert, Fed. Rep. of Germany
Filed Sep. 22, 1980, Ser. No. 189,232
Claims priority, application Fed. Rep. of Germany, Sep. 25, 1979, 2938789
Int. Cl.³ D06F *71/34*
U.S. Cl. 38—15 6 Claims

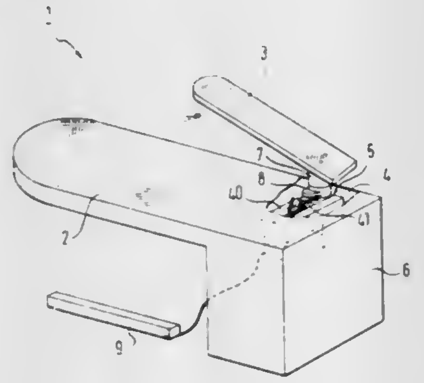

1. A blower for a pressing table, said blower including fan means, a suction side of said fan means and a blowing side of said fan means, passage means for connecting said suction side and said blowing side to a said pressing table in which the blower is incorporated, and alternately operable deflector means having a suction position in which said suction side of said fan means is communicated to said passage means and having a blowing position in which said blowing side of said fan means is communicated with said passage means, said deflector means being operable to switch from said suction position to said blowing position but not from said blowing position to said suction postion until said fan means has been deactivated.

4,372,066
HIGHLIGHTING MARKER FOR MERCHANDISE PRICE SIGN
Robert J. Slavsky, Sr., Lathrup Village, Mich., assignor to Shaw & Slavsky, Inc., Detroit, Mich.
Filed Jul. 16, 1981, Ser. No. 284,073
Int. Cl.³ G09F *7/08*
U.S. Cl. 40—124.1 7 Claims

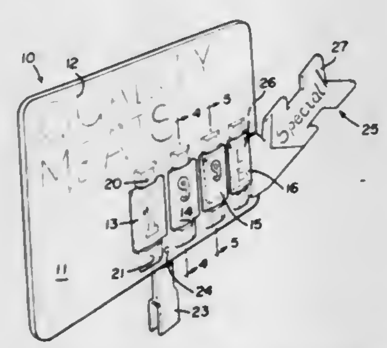

1. A temporary highlighting marker for a merchandise price sign formed of a panel having a surface upon which at least one tag, made of a thin, flat, stiff, sheet material is placed in overlying, normally face to face contact with said surface, with the tag having pricing indicia imprinted thereon for display upon the panel, and with cooperating interlocking means formed on opposite ends of the tag and the panel areas which said ends overlie for fastening the tag upon the panel, and with the tag portion between said ends being free of securement to the panel, said marker comprising:
- a strip formed of thin, flat, stiff sheet material with one end portion formed as a tongue, and its opposite end portion formed as a marking portion which extends laterally of the panel;
- said tongue portion being narrower than the distance between the tag opposite ends and being of a width to closely fit between the opposite cooperating interlocking means, and between and in face to face contact with the tag and the panel surface portion which the tag overlies for being frictionally gripped therebetween;
- and said tag marking portion having imprinted indicia thereon for providing a highlighting display adjacent the panel near the tag;
- and with the marker being manually removeable and replaceable by manually grasping the marking portion and inserting and pulling out the tongue portion from between the tag and panel surface;
- and wherein said interlocking means each comprise a raised pocket struck-out of the panel to provide a pair of opposed, aligned slots, with each slot receiving a tab integrally formed on the opposite ends of the tag;
- and with the marker tongue portion having an integral shoulder portion for engaging a raised edge of one of the pockets for thereby holding the marker in pre-determined alignment with the panel.

4,372,067
DEVICE FOR FILING MISCELLANEOUS ITEMS OF INFORMATION
Paule Ruffino, 32, rue Waldeck Rousseau, Lyon, France (69006)
Filed Dec. 3, 1980, Ser. No. 212,482
Claims priority, application France, Dec. 4, 1979, 79 30166
Int. Cl.³ B42F *21/00*
U.S. Cl. 40—360 12 Claims

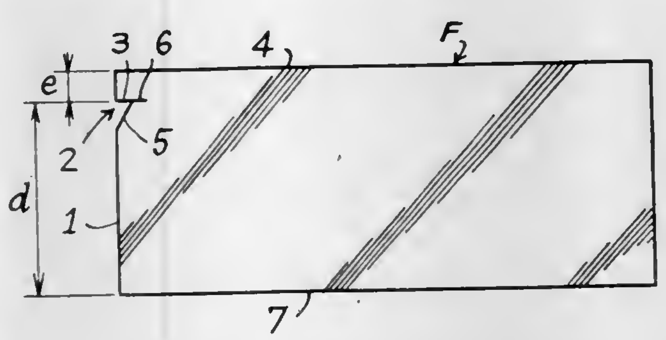

1. Apparatus for filing miscellaneous items of information comprising:
- a plurality of cards, each having a horizontal lower side, a vertical side and a horizontal upper side, a notch on said vertical side and set back from said upper side, said notch being extended by an incision substantially parallel to said upper side; and
- a support forming file having receiving means for cards said receiving means comprising a generally horizontal aperture means for engaging said notch and a slit extending from and communicating with said aperture means, said slit being inclined towards the lower part of said support forming file,
- whereby said notch on said vertical side of each card engages the outer edge of said horizontal aperture of its respective receiving means and said lower side of each card engages the lower end of said slit extending from said aperture, when each card is supported in said file.

4,372,068
RECHARGEABLE TRANSPARENT SLIDE VIEWER APPARATUS
Paul A. Knapp, Tempe, Ariz., and Frederick A. Major, 1725 E. Ellis Dr., Tempe, Ariz. 85282, assignors to Frederick A. Major, Tempe, Ariz.
Filed Aug. 4, 1980, Ser. No. 174,737
Int. Cl.³ G02B *27/02, 27/04;* G03B *21/20;* G02B *7/02*
U.S. Cl. 40—367 11 Claims

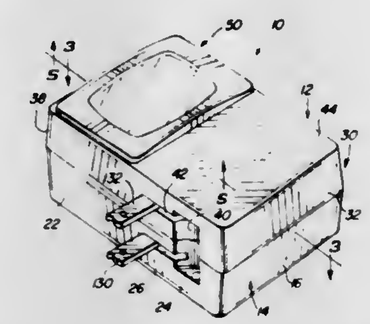

1. Apparatus for viewing a transparency having a front surface and an edge adjacent to the front surface, comprising, in combination:
- housing means, including a recess;
- a slot in the housing means for receiving the transparency for viewing;
- a lamp in the housing means, remote from the slot and disposed adjacent to one end of the transparency when the transparency is received into the housing for viewing, for providing light to illuminate the transparency;
- diffuser/reflector means disposed adjacent to the transparency and extending from adjacent to the lamp to adjacent to the slot for diffusing and reflecting the light from the lamp to the transparency;
- electrical means for providing an electric current to the lamp, including
- a rechargeable battery disposed within the housing means,
- a pair of plug contacts disposed in the recess of the housing means connected to the rechargeable battery and pivotable out of the recess and the housing means and insertable into an electrical outlet for recharging the rechargeable battery;
- switch means connected to the electrical means including a cam portion movable laterally sideways by the front surface of the transparency adjacent to the edge for selectively connecting the electrical current to the lamp and for maintaining the connection of the electrical current to the lamp until the transparency is removed from the slot; and
- lens means disposed adjacent to the transparency and including a lens for viewing the transparency.

4,372,069
IDENTIFICATION DEVICE
Oliver C. Griffith, 138 Shore Rush Dr., St. Simons Island, Ga. 31522
Filed Nov. 17, 1980, Ser. No. 207,475
Int. Cl.³ G09F *11/00*
U.S. Cl. 40—490 2 Claims

1. An identification device for assisting an individual in retaining a plurality of bits of information comprising a body portion of a size that may be conveniently carried on the person, said body portion being a laminated construction comprised of a substantially imperforate center member having a generally rectangular shape, and a plurality of transversely extending members affixed to opposite sides of said center member, said transversely extending members and said center members defining a plurality of inverted "T" shaped slots extending across opposite faces of said body portion, the cross legs thereof forming a plurality of independent recesses in said body portion adapted to receive parts formed with indicia for displaying the bits of information, means for permitting the user to see the indicia on the pieces when received in said recesses comprising the upstanding legs of said "T" shaped slots, means providing a fixed closure for one end of said inverted "T" shaped slots affixed to said center member and said transversely extending members, and retention means providing a closure for the other end of said "T" shaped slots, release of said retention means being effective to permit parts

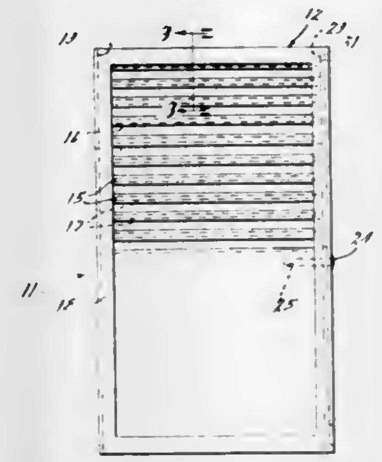

to be inserted or removed from a selected one of said recesses without necessitating removal of parts from the remainder of the recesses, said retention means comprising an elongated member having a cross-section of one of its ends of a configuration complimentary to the inverted "T" shaped slots for facilitating insertion of the pieces therein.

4,372,070
ADHESIVE SIGN AND METHOD OF MAKING
Egon Erlich, 701 Ocean Ave. #10, Santa Monica, Calif. 90402
Filed May 26, 1981, Ser. No. 266,913
Int. Cl.³ G09F *7/16*
U.S. Cl. 40—595 14 Claims

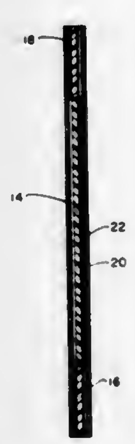

1. An adhesive sign comprising:
- a material having a plurality of characters representing a sign cut into the material, said characters remaining in the material;
- an adhesive covering substantially the entire top of the material, excluding the areas forming the characters;
- a top covering sheet co-extensive with the top surface area of said material;
- an adhesive on the bottom of said material; said adhesive material limited only to the areas forming said characters;
- a bottom covering sheet means on the bottom of said material coextensive with the surface area of said material.

4,372,071
FABRIC FACED BILLBOARD
Robert K. Vicino, 8847 Complex Dr., San Diego, Calif. 92123
Filed Sep. 14, 1981, Ser. No. 301,548
Int. Cl.³ G09F *15/00*
U.S. Cl. 40—624 **15 Claims**

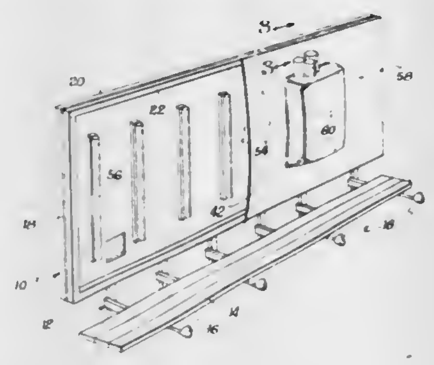

1. A display comprising:
(a) a flexible sheet defining a message-carrying surface;
(b) a support frame and means for mounting said sheet substantially continuously around its periphery to said frame;
(c) backing means comprising a rigid planar back board panel of a billboard behind said sheet and together with said sheet defining a substantially enclosed chamber;
(d) means for introducing air into said chamber on an ongoing basis at a pressure higher than ambient to billow said sheet away from said backing to tauten same so that said message-carrying surface is generally smooothly deployed and substantially free of surface discontinuities resulting from such effects as sagging, stretching and wind ripple; and
(e) said support frame including means supporting said billboard upright over a ground surface.

4,372,072
FISHING ROD HOLDER HAVING DUAL MOUNTING CAPABILITIES
Joseph E. Comeau, 18 State Park Dr., Titusville, N.J. 08560
Filed Feb. 23, 1981, Ser. No. 236,737
Int. Cl.³ A01K *97/10*
U.S. Cl. 43—21.2 **7 Claims**

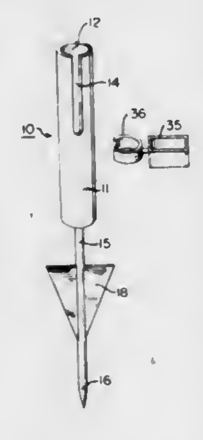

1. The combination of a fishing rod holder adapted to be inserted into the ground, and a bracket for mounting said holder to a vehicle bumper, the fishing rod being of the type having a reel secured to the handle end of said rod and having a fishing line carrying a sinker attached thereto, said holder comprising;
a longitudinal tubular member symmetrically disposed about a main axis of a given diameter having an open top for accommodating the handle portion of a fishing rod, and a closed bottom end, with a slot extending from the periphery of said open top and directed relatively parallel to the main axis of said tubular member, with said slot adapted to accommodate the reel of said rod, an elongated spike member depending from said bottom end and having a relatively pointed termination remote from said bottom end, an anchor plate member secured between said tubular member and said spike member at a predetermined distance above said pointed termination, said bracket comprising;
a central section with integral extending top and bottom arms for coacting with the top and bottom portions of a bumper for securing the same thereto, and having a spike accommodating means secured to said central section for accommodating said elongated spike, a sinker securing means coupled to said bracket for accommodating a sinker secured to said fishing line whereby when said handle of said rod is emplaced in said rod holder and said elongated spike is emplaced in said bracket said sinker securing means accommodates said sinker to exert a force via said line to firmly hold said rod holder and said rod in position on said bumper.

4,372,073
FISHING TACKLE STORAGE APPARATUS
Sidney M. Goldman, 401 Webster, Chicago, Ill. 60614
Filed Jul. 29, 1981, Ser. No. 288,064
Int. Cl.³ A01K *97/06*
U.S. Cl. 43—57.1 **11 Claims**

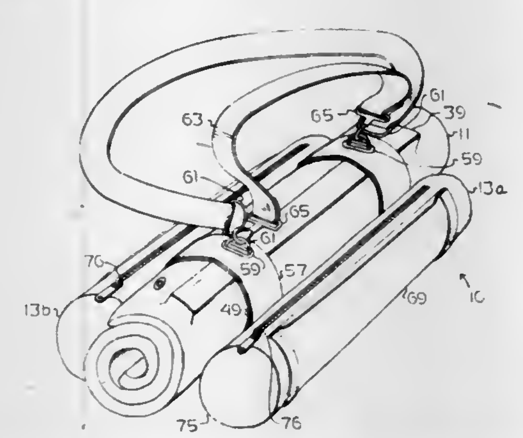

1. A fishing tackle storage apparatus comprising a primary storage apparatus including a lure mounting pad made from a foamed elastomeric material adapted for detachably receiving the hooks of a hook-type fishing lure, said foamed elastomeric flotation material having a closed cell structure substantially impenetrable to water so that its buoyancy is retained even when in contact with water for an extended period of time, a protective cover flap substantially resistant to hook penetration adapted to cover the lure mounting pad and associated hooks and being rollable with the lure mounting pad into a compact, generally cylindrical shape, a pliable and rollable backing secured to said lure mounting pad so as to overlie the surface thereof opposite the surface covered by said protective cover, fastener means mounted on said primary storage apparatus so as to project outwardly therefrom when said apparatus is in the form of a generally cylindrical shape, and including two substantially cylindrical shaped auxiliary tackle receptacles having clasp means thereon adapted for releasable attachment, in saddlebag fashion, to said fastener means on said primary storage apparatus when said primary apparatus is rolled into a generally cylindrical shape.

4,372,074
ANIMAL TRAP
Pierre Arrabit, 631 20th Ave., San Francisco, Calif. 94121
Filed Oct. 20, 1980, Ser. No. 198,691
Int. Cl.³ A01M *23/04*
U.S. Cl. 43—69 **11 Claims**

1. An animal trap adapted to be located on a ground surface and exterior of a building and in adjoining relation to a vertical wall of said building, comprising:
a receptacle having an animal receiving chamber, a pair of vertically extending side walls, front and end walls connecting said side walls and a bottom, said walls and bottom being substantially water impervious, said receptacle having an open top providing an entry to said chamber;
an elongate, tubular housing mounted to said receptacle and covering said entry, said housing having wall portions defining a pair opposed openings and a top, a passage extending between said openings, a first aperture for communication between said passage and said animal receiving chamber, and a second aperture formed in said top in generally opposed relation to the first aperture;
bait receiving means mounted in said passage and in communicating relation to the second aperture to allow bait to be received by said bait receiving means through said second aperture;
a cover member moveably attached to said housing for removeably covering the second aperture, the cover member extending past the periphery of said second aperture, the lateral edges of the cover member extending

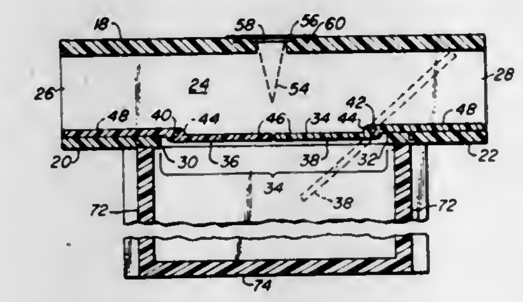

downwardly past the second aperture to provide water resistant protection for said second aperture;
a pair of spaced apart grooves formed in the outer surface of the top of the housing, said grooves extending transverse said housing, at least a portion of each of said grooves underlying at least a portion of the longitudinal edges of said cover member to help prevent water from entering said second aperture;
a pair of substantially coplaner door members pivotedly mounted in horizontal end-to-end relation in said passage, said door members having interior end portions extending toward one another and being moveable from a first position overlying and covering said aperture to a second position extending through said aperture and said entry and into said chamber; and
means attached to said housing and configured to conformably mate with said edge portions of said receptacle, said edge portions being correspondingly configured to produce a water resistant seal therebetween.

4,372,075
APPARATUS FOR COUPLING AND UNCOUPLING TOY TRACTORS AND SEMITRAILERS
Samuel J. Harkins, Maple Shade, N.J., assignor to Tyco Industries, Inc., Moorestown, N.J.
Filed Mar. 20, 1981, Ser. No. 245,866
Int. Cl.³ A63H *33/00*
U.S. Cl. 46—1 K **10 Claims**

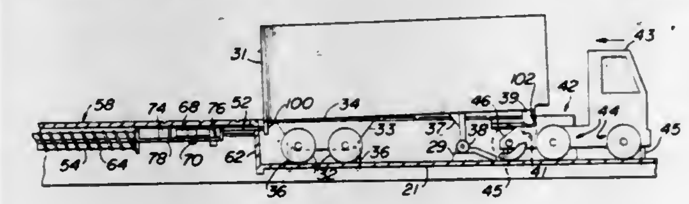

1. Apparatus for coupling a toy semitrailer and a toy tractor which ride on a roadway, wherein the semitrailer is provided with dolly wheels and a depending pin forward of the dolly wheels and the tractor is provided with a recess within which the semitrailer pin can be seated, comprising:
(a) a ramp in said roadway having an inclined portion and a flat portion;
(b) reciprocable means adapted for a movement between a fully retracted position with respect to the ramp and a fully extended position with respect to the ramp, said fully extended position being located between said fully retracted position and said ramp;
(c) means for automatically presetting and releasably retaining said reciprocable means in a partially extended position intermediate the fully retracted and fully extended positions such that the semitrailer dolly wheels rest on the flat portion of the ramp and the semitrailer pin is elevated with respect to the tractor recess;
(d) said reciprocable means being adapted to be contacted and displaced by said semitrailer from said partially extended position to said fully retracted position such that the dolly wheels remain on the flat portion of the ramp;
(e) means for urging said reciprocable means from said fully retracted position past said partially extended position to said fully extended position to cause said reciprocable means to contact the semitrailer and move the semitrailer such that the dolly wheels ride off the flat portion of the ramp onto the inclined portion of the ramp whereby the forward end of the semitrailer pivots downwardly and the semitrailer pin enters the tractor recess.

4,372,076
MODULAR INTERLOCKING BLOCK CONSTRUCTION TOY
Harald Beck, 15 Croxton Ave., Oakland, Calif. 94611
Filed Jun. 18, 1979, Ser. No. 49,152
Int. Cl.³ A63H *33/08*
U.S. Cl. 46—20 **8 Claims**

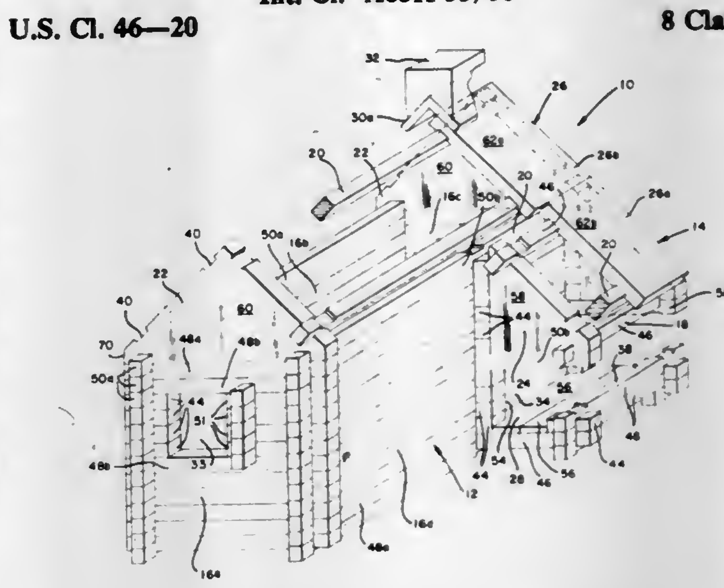

1. A modular interlocking block construction toy comprising:
a plurality of elongated logs of substantially uniform cross section forming a set, each log having opposed notches for interconnecting said logs by mutually interfacing of notches of separate logs to form relatively rigid structures, wherein a first plurality of said logs in said set have at least two pairs of notches spaced apart by a first primary dimension, and a second plurality of said logs in said set have at least two pairs of notches spaced apart by a second primary dimension;
a plurality of flats formed of flat block pieces having notches spaced for cooperation with said logs, wherein said flats include a key gable flat defining said primary dimensions, said gable flat having a triangular configuration with a bottom edge and two equal side edges at an acute angle to said bottom edge, said bottom edge having two spaced notches spaced apart a distance comprising said second primary dimension and said side edges each having two spaced notches spaced apart a distance comprising said

first primary dimension wherein said second primary dimension is greater than said first primary dimension.

4,372,077
COMBINED BOOK, FLANNELBOARD AND HAND PUPPET
Dora O. Balbuena, 799 Larkspur Dr., Sandy, Utah 84070
Filed Jul. 1, 1981, Ser. No. 279,303
Int. Cl.³ A63H *3/14;* **G09B** *1/02*
U.S. Cl. 46—116 **9 Claims**

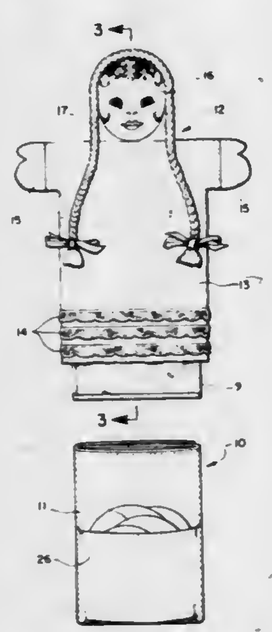

1. An amusement device comprising in combination as part of a merchandisable packet, a storybook; a flannel board; flannel board figures, said figures including characters or scenes taken from the storybook story and printed on a material adapted to hold in place when placed on the flannel board; and a hand puppet adapted to be manipulated by a hand and having a storage pocket therein to receive said storybook, flannel board, and figures for storage, said puppet being a likeness of one of the characters in the story.

4,372,078
TOY MOVABLE BY ALTERNATELY RELOCATING INDIVIDUAL MEMBERS OF A PAIR OF BODY PARTS
Gorden W. Spring, Norwalk, Calif., assignor to Tomy Corporation, Carson, Calif.
Filed Nov. 13, 1980, Ser. No. 206,345
Int. Cl.³ A63H *11/00*
U.S. Cl. 46—150 **23 Claims**

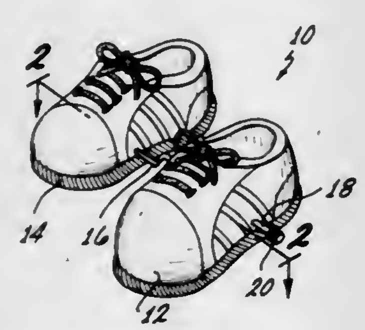

1. A toy which comprises:
a first body and a second body associated with each other;
a crank means extending transversely between said first and said second bodies and rotatably connected to both of said first and said second bodies, said crank means forming the only connection between said first and said second bodies, said crank means having ends with one end terminating within said first body and the other end terminating within said second body;
means for rotating one end of said crank so as to operate said toy, during the operation of said toy said first and said second bodies moving on a support surface with respect to one another about said crank means, said movement sequentially comprising first having both of said bodies located on said support surface with said first body longitudinally displaced in a starting position with respect to said second body, secondly said second body moving through a pathway until said second body is repositioned on said support surface longitudinally with respect to said first body and thirdly said first body moving through a pathway until said first body is repositioned longitudinally with respect to said second body to locate said first and said second bodies in said starting position;
each of said first and said second bodies including a surface engagement means associated with it and capable of engaging said support surface, one of said engagement means of one of said first and said second bodies engaging said support surface as said first body moves in its pathway and the other of said engagement means of said first and said second bodies engaging said support surface as said second body moves in its pathway, said one of said surface engagement means which engages said surface as said first body moves in its pathway capable of impeding said second body from moving with respect to said support surface as said first body moves in its pathway, the other of said surface engagement means which engages with said surface as said second body moves in its pathway being capable of impeding said first body from moving with respect to said surface as said second body moves in its pathway.

4,372,079
GARDEN EDGING STRUCTURE
Ann S. Trageser, 114 Belvedere Sound View Dr., Hampstead, N.C. 28443
Filed Jan. 22, 1981, Ser. No. 227,184
Int. Cl.³ A01G *1/00*
U.S. Cl. 47—33 **3 Claims**

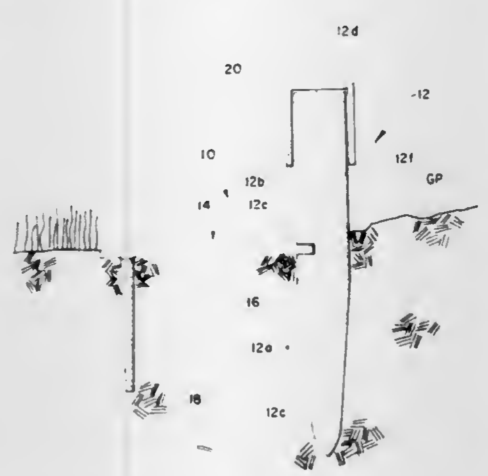

1. A garden edging structure for generally surrounding an enclosing a garden plot comprising: an inner closed border structure for enclosing and extending around a garden plot; said inner border structure including a series of ground penetrating border member having a first underground portion that is adapted to extend into the ground and to generally anchor said inner border structure about said garden plot and a second portion extending above ground level and generally surrounding said garden plot, said inner border structure further including a series of elongated ground penetrating members of selected length, and wherein there is provided a U-shaped connecting means adapted to be capped in inverted fashion over and about respective joints defined between successive ground penetrating members comprising said inner boundary structure; and wherein said ground penetrating members of said inner border structure in transverse cross section comprises an elongated member extending into the ground with a lower tapered ground penetrating end and a generally rectangularly shaped upper portion with a flat top exposed surface extending above ground level; a generally planar horizontally extending outer border structure disposed outwardly and adjacent said inner border structure and extending generally around said garden plot outwardly of said inner border structure, said outer border structure including an elongated, relatively thin strip of material comprising a segment of vinyl material with an ornamental surface provided about the top thereof; joining means for allowing said outer border structure to join said inner border structure to form a continuous border around said garden plot, said joining means including a slot formed along the outer side of said inner border structure with said slot having a depth at least equal to the thickness of said outer border strip material for receiving the same, and wherein said slot is formed intermediately along the height of said inner border structure such that said slot lies generally at ground level; and anchoring means engaged with said outer border structure for penetrating into the earth surrounding said garden plot to anchor said outer border structure about said garden plot.

4,372,080
TREATED PEANUT SEEDS
Kyle W. Rushing, Plano, Tex., assignor to Gustafson, Inc., Dallas, Tex.
Continuation-in-part of Ser. No. 111,726, Jan. 14, 1980, Pat. No. 4,339,456. This application Mar. 17, 1981, Ser. No. 244,765
Int. Cl.³ A01C *1/06*
U.S. Cl. 47—57.6 **7 Claims**

1. Treated peanut seeds comprising peanut seeds with the testa intact on the cotyledons, and a coating for treating the seeds applied onto the testa, the coating being produced by treating the seeds with a colloidal suspension including oil as a base and also including micronized seed treating active chemicals carried by the oil in the suspension, the suspension being applied to the peanut seeds at a rate in the range of 6 to 16 fluid ounces per hundred weight of peanut seeds, and the seeds being allowed to dry with the result that the coating including active chemicals remains on the seeds whereby they minimize chemical dust related environmental and physical problems.

4,372,081
HEAT RELEASABLE WINDOW GUARD
Joseph Forgione, 6145 Highway 51 North, Millington, Tenn. 38053
Filed May 18, 1981, Ser. No. 264,686
Int. Cl.³ E05F *15/20*
U.S. Cl. 49—8 **7 Claims**

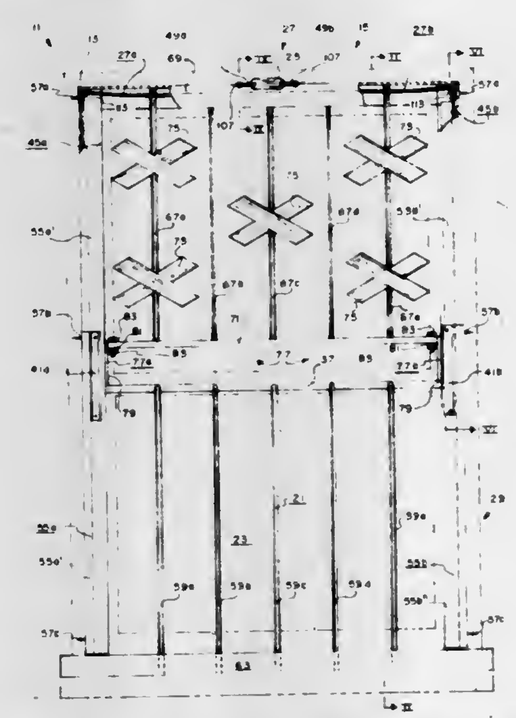

1. Window guard means for providing a degree of security against an intruder gaining entrance into a dwelling through the usual window structure of the type including a window frame having a generally horizontal top frame structure and generally vertical first and second side frame structures coupled to opposite ends of said top frame structure, said window guard means comprising:
(a) anti-intrusion bar means disposed on the interior side of said window structure and in proximity thereto, said anti-intrusion bar means including a movable portion for being situated for vertical slidable movement between a normally UP position in which at least a comparable portion of said window structure is adequately guarded therewith and a DOWN position in which an escape route through said window structure is provided the inhabitants of the dwelling in the event of fire, said movable portion including a support member having a first end and a second end; and
(b) support means for normally supporting said movable portion of said anti-intrusion bar means in said UP position, said support means including a fusible link means for being attached to said top frame structure of said window frame substantially intermediate said first and second side frame structures, including a first latchstring member having a first end for being attached to said fusible link means and having a second end, including a first latch member attached to said second end of said first latchstring member for normally engaging said first end of said support member of said movable portion of said anti-intrusion bar means, said first latchstring member extending from said fusible link means along said top frame structure and down said first side frame structure, including a second latchstring member having a first end for being attached to said fusible link means and having a second end, and including a second latch member attached to said second end of said second latchstring member for normally engaging said second end of said support member of said movable portion of said anti-intrusion bar means, said second latchstring member extending from said fusible link means along said top frame structure and down said second side frame structure, said fusible link means releasing said latchstring members when exposed to a predetermined degree of heat, thus enabling gravitational movement of said movable portion of said anti-intrusion bar means from said UP position thereof to said DOWN position thereof in the event a fire breaks out within the dwelling, thereby, the fire escape route being automatically provided while denying the intruder the convenience of utilizing said window structure for gaining unwarranted entrance into the dwelling.

4,372,082
STORM WINDOW UNIT HAVING EXPANDABLE FRAME
Gary A. Pagel, 10107 NE. 37th St., Vancouver, Wash. 98662
Filed Feb. 18, 1981, Ser. No. 235,593
Int. Cl.³ E05B *65/04*
U.S. Cl. 49—62 **4 Claims**

1. An adjustable window unit, comprising:
(a) an inner frame having a plurality of inner frame members interconnected to define frame corners, said inner frame members including a horizontally disposed head member and a pair of vertically disposed jamb members;
(b) a respective expander cap member having a pair of opposite ends, said expander cap member comprising an elongate channel of generally U-shaped cross-section including a base portion and a pair of parallel flange portions, disposed along at least one of said inner frame head and jamb members, each expander cap associated with one of said inner frame jamb members defining a central groove on a peripheral side thereof;
(c) frame expansion means associated with said window unit for adjustably moving each said expander cap member outwardly relative to the respective inner frame member,

for mounting said window unit within a window casing; and

(d) corner cap means, fitted over a respective end of at least one of said expander cap members and extending around a respective corner of said inner frame for closing a gap located between said window casing and said end of said expander cap member, said corner cap means comprising

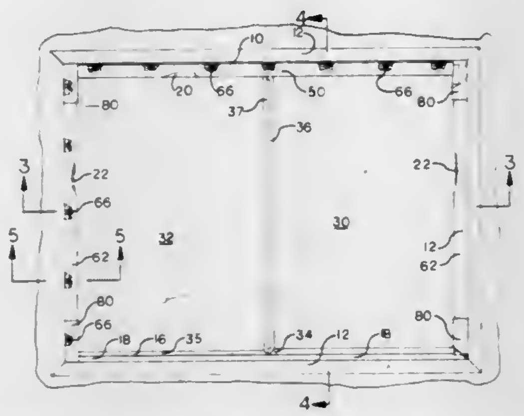

an elongate generally U-shaped channel portion, disposed about one of said expander cap members, tab means, disposed generally perpendicular to the length of said channel portion, for extending along another member of said window unit and holding said corner cap in position, and a rib portion located within said generally U-shaped channel portion and adapted to fit within said central groove.

4,372,083

PLIABLE EDGE PROTECTOR

Christopher Hatzikelis, R.R. 1, Palgrave, Ontario; Ciro Madonia, 1390 Beaufort Dr., Burlington, Ontario, and Cesare C. Cosentino, 45 Grandview Ave., Thornhill, Ontario, all of Canada

Continuation of Ser. No. 85,294, Oct. 16, 1979, abandoned. This application Jun. 29, 1981, Ser. No. 278,589

Claims priority, application Canada, Mar. 26, 1979, 324112

Int. Cl.³ E05F *7/00*

U.S. Cl. 49—462 9 Claims

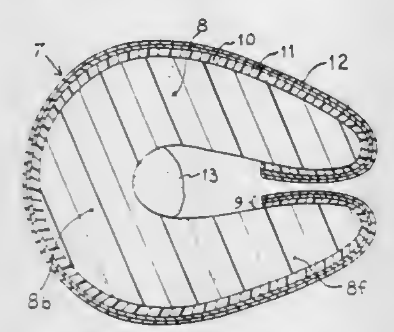

1. A pliable edge protector comprising;

(a) an elongated extruded homogeneous channelar member formed solely of plastic pliable material, said member having a bight portion and a pair of opposed flange portions extending therefrom in mutually convergent relation to form a restricted entry suitable in use to receive an automobile door edge in readily penetrating relation therebetween;

(b) a decorative film comprising a pliable film strip having a major surface thereof bonded in adhering relation to the outer surface of said channelar member, a solely decorative metallic film deposited on the exterior of said film strip; and a weather resistant film deposited on the exterior surface of said metallic film in overlying protective relation therewith and extending within said said entry to locate the edges of said metallic film in protected, non-exposed relation between said flange portions, and

(c) a bead of pressure sensitive adhesive disposed within said bight portion and protected prior to assembly with said edge soley by said flange portions to provide substantially non-kinking, substantially non-degradable pliable protector.

4,372,084

DEVICE FOR SEALING A WING OF A WINDOW, A DOOR OR THE LIKE IN RELATION TO A FRAME ASSOCIATED THEREWITH

Bernhard Janke, Bindlach, Fed. Rep. of Germany, assignor to HEF Technische Entwicklung GmbH & Co. KG, Dusseldorf, Fed. Rep. of Germany

Filed Sep. 10, 1980, Ser. No. 185,626

Claims priority, application Fed. Rep. of Germany, Sep. 21, 1979, 2938193

Int. Cl.³ E06B *7/16*

U.S. Cl. 49—477 8 Claims

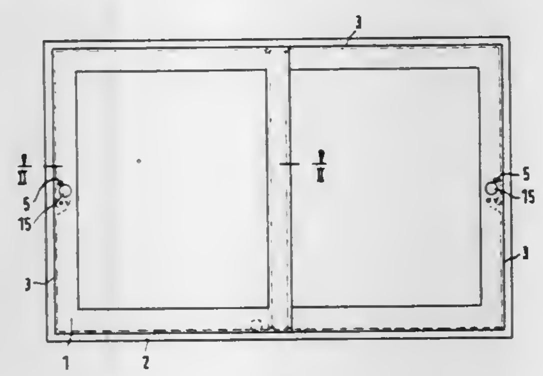

1. A device for sealing a wing of a window, a door or the like in relation to a frame associated therewith, said device including a sealing tube which is adapted to be expanded by liquid pressure and including closing means adapted to lock said wing in said frame, said device comprising:

a diaphragm-type pump for producing said liquid pressure,
an independent supply reservoir for the liquid to be pressurized, said liquid reservoir being connected to said pump,
a first valve for actuation by said closing means connecting said liquid reservoir to said sealing tube, and
a second valve between said pump and said sealing tube, and opening towards said sealing tube,
said diaphragm-type pump comprising:
a pot-like base member,
a diaphragm closing said base member, and
an upper member attached to said diaphragm, said upper member supporting a rotatable element,
said upper member being provided with pegs and is slidably guided in slots of a guide sleeve, said slots extending at right angles to the plane of said diaphragm,
said rotatable element having a plurality of sawtooth-shaped cam elements which rest on said pegs, and being rotatably mounted in relation to said upper member.

4,372,085

APPARATUS FOR FORM-GRINDING THE TOOTH-FLANKS OF A CYLINDRICAL GEARWHEEL

Dieter Wiener, Ettlingen; Gerd Sulzer, Wiggensbach-Simmlers, both of Fed. Rep. of Germany; Rudolf Skyba, deceased, late of Haldenwang-Börwang, Fed. Rep. of Germany (by Dorothea Skyba, legal representative), and Jürgen Pomp, Kempten, Fed. Rep. of Germany, assignors to Liebherr-Verzahntechnik GmbH, Kempten, Fed. Rep. of Germany

Filed Dec. 14, 1979, Ser. No. 103,466

Claims priority, application Fed. Rep. of Germany, Dec. 22, 1978, 2855857

Int. Cl.³ B24B *47/26, 1/00;* B23F *1/02*

U.S. Cl. 51—216 ND 1 Claim

1. Apparatus for use in producing spur cylindrical or helical cylindrical gearwheels by form-grinding the flanks of the gear teeth with a grinding wheel having a profile of the tooth space between adjacent teeth of the gearwheel, the grinding wheel

initially being simultaneously applied to both flanks of a given gear tooth and thereafter being separately applied to each of the flanks, said apparatus comprising:

a rotatable indexing wheel (**26**) couplable to the gearwheel (**12**) generally coaxially therewith, said indexing wheel having cutouts (**28**) equal in number to the tooth number desired on the gearwheel;
indexing pawl means operatively associated with said indexing wheel and including,
an indexing nose (**30**) radially movable into and out of engagement with said cutouts of said indexing wheel,
a lever (**32**) positioned generally tangentially with respect to said indexing wheel, said lever having an end receiving said indexing nose and pivoted at a point radially beyond

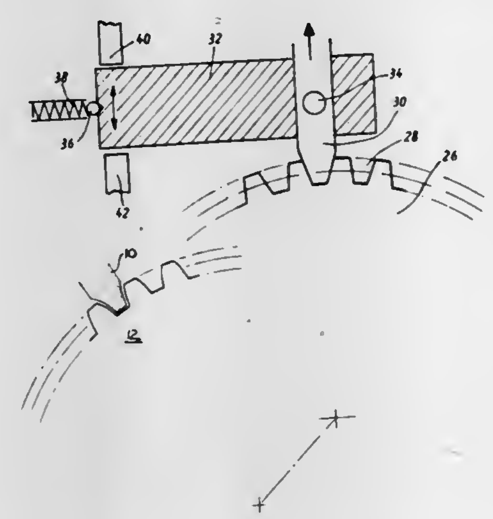

the point of engagement of said indexing nose and indexing wheel, said lever having a free end arcuately movable for reciprocally rotating the indexing wheel and gearwheel to separately apply the grinding wheel to each flank of the gear tooth,
a pair of adjustable stops (**40, 42**) operatively associated with the free end of said lever for limiting the arcuate movement of said free end of said lever and of said indexing nose for defining the amount of rotation of said indexing wheel and gearwheel; and
means (**36, 38**) for releasably retaining said lever in a central position intermediate the limits of arcuate movement of said free end in which the indexing wheel positions the gearwheel for simultaneous application of the grinding wheel to both flanks of the gear tooth.

4,372,086

DISPLAY

Albert W. Hanlon, Boylston, Mass., assignor to Admore, Inc., St. Shrewsbury, Mass.

Filed Apr. 6, 1981, Ser. No. 251,329

Int. Cl.³ A47B *5/00*

U.S. Cl. 52—36 8 Claims

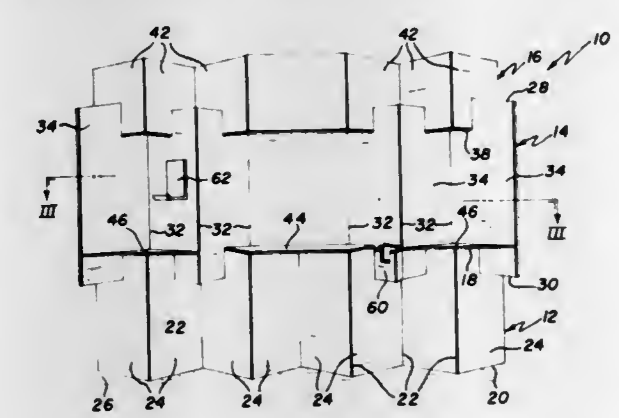

1. A display construction comprising:

(a) a first vertical display panel of light-weight sheet material having a top edge, a bottom edge, and a plurality of vertical folds that divide the panel into a plurality of first planar sections so that the said top and bottom edges extend in a zig-zag pattern that enables the panel to be supported on a flat surface along its bottom edge at least some of said planar sections each having a vertical slot that extends downwardly from the top edge,

(b) a second vertical panel of light-weight sheet material having a top edge and a bottom edge, said second panel having a plurality of vertical folds that divide the second panel into a plurality of second planar sections so that the top and bottom edges of said second panel each extend in a zig-zag pattern, at least some of the second planar sections each having a vertical slot that extends upwardly from the bottom edge of said second panel, the notches of the first and second panels being vertically aligned for securing the panels in an interlocking relation so that the first and second sections are in different vertical planes, said second panel having an aperture slot which is located above the top edge of the first panel,

(c) a horizontal shelf having a tab which extends through the aperture in the second panel and which is supported on the top edge of the first panel, and

(d) means for locking the tab against horizontal movement.

4,372,087

MODULAR BUILDING STRUCTURES

Ernest J. Kump, 56 Curzon St., Mayfair, London W1Y 7PF, England

Filed Jun. 12, 1980, Ser. No. 272,456

Int. Cl.³ E04B *1/348;* E04H *1/00;* E04B *1/34*

U.S. Cl. 52—79.12 11 Claims

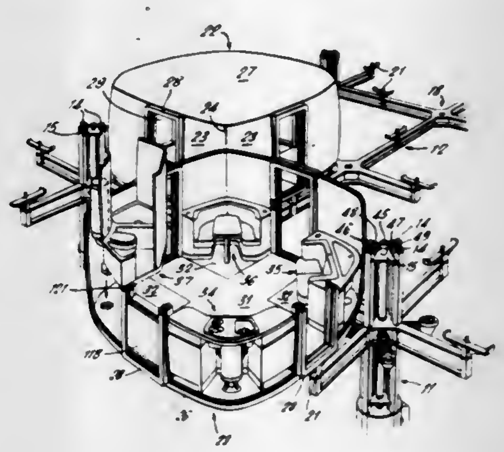

1. A modular building structure comprising a support structure including a plurality of spaced vertical columns, horizonal beams interconnected between columns to form a rigid support system, and at least one space module structurally defining an enclosed volume of space and adapted to be removably supported from said support structure, in which there are provided utility conduits integrated with at least some of said columns and connectable at their lower ends to utility inlets and outlets, column manifold means at a plurality of levels in each of the said some vertical columns, said manifold means having connections to the said utility conduits, module manifold means in at least some of said space modules having connections to utility conduits within the modules and coupling members each having conduits for the utilities and means for connection to both a column manifold means and a module manifold means said connection means being constructed and arranged so that connection of the coupling member with a manifold means in a column and a module connects together the utility conduits in the module and the volumn via the conduits in the coupling member.

4,372,088
STRUCTURE WITH SLAB BEAMS
Claus Cichos, Wehrheim, Fed. Rep. of Germany, assignor to Bärbel Cichos, Wehrheim, Fed. Rep. of Germany
Filed Mar. 10, 1980, Ser. No. 219,167
Claims priority, application Fed. Rep. of Germany, Mar. 8, 1979, 2908995
Int. Cl.³ E04B *1/00*
U.S. Cl. 52—251 **10 Claims**

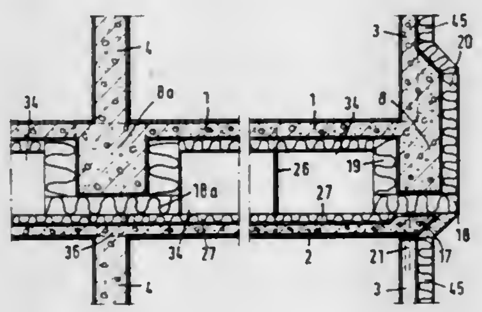

1. A structure comprising
at least one horizontal slab beam having a steel beam and a concrete slab;
a pair of vertical slab beams disposed in vertically spaced relation to each other to define an outer wall, each vertical slab beam having a steel beam and a concrete slab; and
a poured-in-place concrete beam having reinforcing steel therein connecting said steel beam of said horizontal slab beam to each said steel beam of said vertical slab beams, said poured-in-place concrete beam being spaced above said concrete slab of the lower one of said vertical slabs and being in unreinforced contact with said concrete slab of said horizontal beam and said concrete slab of the other of said vertical slabs.

4,372,089
ENERGY SAVING BUILDING AND METHOD OF MAKING SAME
Knut V. Akesson, Dalsberga gard, Fack 35, S-775 01 Krylbo, Sweden
Filed Apr. 7, 1980, Ser. No. 137,777
Claims priority, application Sweden, Apr. 6, 1979, 7903109; Dec. 20, 1979, 7910567
Int. Cl.³ E04B *1/78*
U.S. Cl. 52—404 **19 Claims**

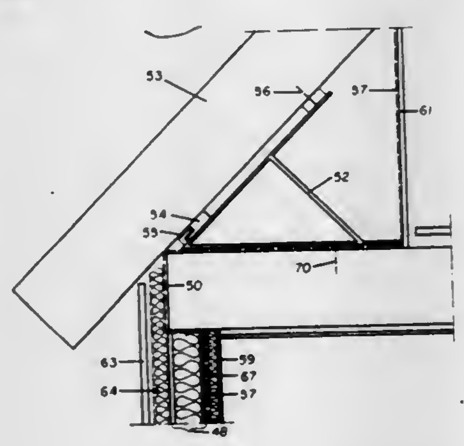

1. Tight and energy saving building, comprising:
a first level having a floor as the lower surface thereof and upwardly extending walls;
a second level above said first level and separated from the first level by an intermediate floor structure (51) and having generally upwardly extending members extending upwardly from said intermediate floor structure;
said intermediate floor structure being jointed to said walls of said first level and to said upwardly extending members of said second level;
an upper structure extending over said second level;
thermal insulation material in said floor, in the walls of said first level, in said upwardly extending members of said second level and in said upper structure;
an integral airtight vapor barrier (57) interior (with respect to the building) of a major part of the thermal insulation material in the floor and walls of the first level;
an integral airtight vapor barrier (57) interior (with respect to the building) of a major part of the thermal insulation material in the upper structure and in the walls of the second level; and
an airtight layer (50) that extends through the joints between said intermediate floor structure and the walls of said first level and the upwardly extending members of said second level, said airtight layer (50) extending around the outer periphery of said intermediate floor structure;
said two airtight vapor barriers (57, 57) being sealingly united with said airtight layer (50).

4,372,090
STRUCTURE FOR ROOFING TILE
Kojiro Shichijo, 2-3-45-731 Tsurumi, Tsurumi-ku, Yokohama, Kanagawa, Japan
Filed Oct. 20, 1981, Ser. No. 313,323
Int. Cl.³ E04D *1/00;* B32B *3/30*
U.S. Cl. 52—536 **3 Claims**

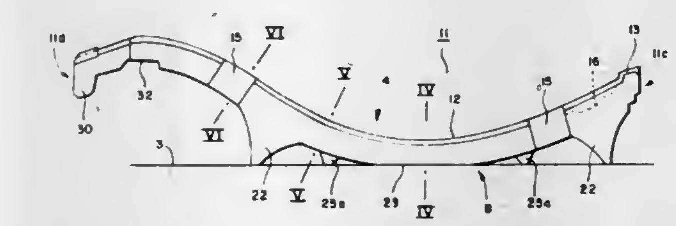

1. A roofing tile which is generally rectangular in plan view and S-shaped in cross-section, said tile comprising:
an upwardly projecting, lateral, top end flange provided on a top surface of said tile;
at least one engagement recess provided in said top end and said top end flange;
at least a pair of stabilizing pawls provided on a bottom surface of said tile adjacent said top end, each of said stabilizing pawls provided on each side of a trough of said S-shaped cross-section, said stabilizing pawls for engaging with a surface of a roofing tile support;
a plurality of first longitudinal ribs provided on said bottom surface of said tile adjacent said top end of said tile for engaging with said surface of said roofing tile support and for reinforcing said tile;
a plurality of second longitudinal ribs provided on said bottom surface of said tile adjacent a bottom end of said tile for reinforcing said tile;
a lateral rib provided on said bottom surface of said tile adjacent said bottom end, said lateral rib for engaging with an upwardly projecting, lateral, top end flange of a subjacent tile;
at least one projection provided on said lateral rib, said projection for engaging with an engaging recess of said subjacent tile;
a first longitudinal groove provided in said top surface of said tile adjacent one edge of said tile;
a first longitudinal, upwardly projecting flange provided adjacent said first longitudinal groove;
a second longitudinal groove provided in a bottom surface of said tile adjacent another edge of said tile for engaging with a first longitudinal, upwardly projecting flange provided on an adjacent tile;
a second longitudinal, downwardly projecting flange provided on said bottom surface adjacent said second longitudinal groove, said second longitudinal, downwardly projecting flange for engaging with a first longitudinal groove provided in said adjacent tile; and
a stepped surface provided along and between said bottom end and a lateral rib of said subjacent tile;
whereby said tile may be installed without utilizing crosspieces.

4,372,091
PRECAST CONCRETE STRUCTURAL UNIT AND COMPOSITE WALL STRUCTURE
William L. Brown, Avon, Conn., and Roger L. Toffolon, 1060 Prospect Ave., Hartford, Conn. 06105, assignors to Atlantic Pipe Corporation, Plainville, Conn. and Roger L. Toffolon, Stuart, Fla.
Continuation-in-part of Ser. No. 968,476, Dec. 11, 1978, abandoned. This application Nov. 4, 1980, Ser. No. 204,327
Int. Cl.³ E04C *1/10*
U.S. Cl. 52—593 **59 Claims**

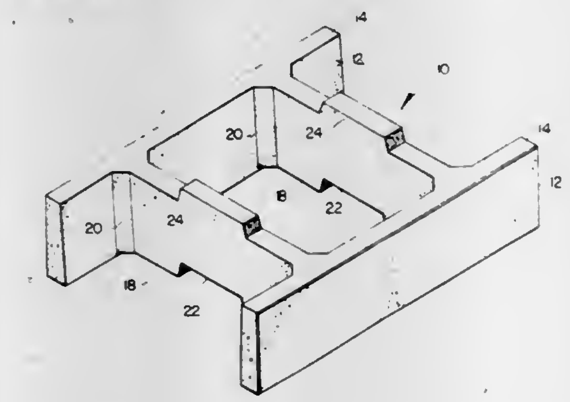

1. A concrete structural unit for use in construction of walls and the like in vertically stacked horizontal row relationship with other similar units; said unit comprising a pair of laterally spaced longitudinally extending and vertically disposed side panels each of a generally rectangular configuration viewed laterally and each of a generally rectangular cross-sectional configuration, and said panels cooperatively defining a vertically exposed generally rectangular space therebetween, a pair of vertically disposed generally rectangular and laterally extending connecting arms disposed between said panels at respective inner surfaces thereof whereby to secure the panels in relatively fixed position, said arms being spaced longitudinally from each other and from the ends of the panels and each of said connecting arms including a top-bottom lateral interlock means comprising a disengageable mortise-tendon connection with a vertically recessed mortise and a complementary vertically projecting tendon arranged in vertically opposite relationship on the arm, said mortise-tendon interlock means including at least two complementary generally vertical bearing surfaces adapted for pressure engagement, and said bottom lateral interlock means on each connecting arm serving cooperatively with top interlock means on a connecting arm of an immediately sub-adjacent unit for laterally interlocking the two units when the units are superimposed, said interlock means being gravity dependent but physically positive laterally with respective generally vertical complementary bearing surfaces of the bottom and top interlock means of the superimposed units in pressure engagement, and each said mortise and tendon having a width less than three-fourths (3/4) the total width of the structural unit whereby said bearing surfaces are spaced substantially laterally inwardly from the side panels toward the center of the connecting arm, and the longitudinal spacing between connecting arms being approximately twice the longitudinal spacing of each arm from the adjacent end of the side panels, the said units thus being adapted for vertical alignment and lateral interlocking of alternate connecting arms when the units are stacked vertically in horizontally staggered rows with the horizontal displacement between units in vertically adjacent rows approximately one-half the length of a unit.

4,372,092
PRECAST CONCRETE MODULAR BUILDING PANEL
Fred T. Lopez, 1772 22nd St., Ogden, Utah 84401
Continuation of Ser. No. 714,919, Aug. 16, 1976, Pat. No. 4,259,824. This application Dec. 16, 1980, Ser. No. 216,858
The portion of the term of this patent subsequent to Apr. 7, 1998, has been disclaimed.
Int. Cl.³ E04B *5/04*
U.S. Cl. 52—612 **5 Claims**

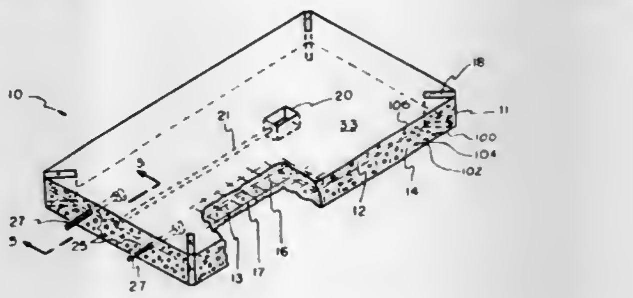

1. A structure at least partially of a concrete formulation comprising:
scoria, a suitable fibrous material, and pumice, the pumice being of a type having a microstructure substantial portions of which appear fiber-like under an electronic microscope, said type being found at least in the vicinity of Milford, Utah, Malad, Idaho, and Lava Hot Springs, Idaho, so that the scoria, the fibrous material and the pumice cooperate together in the concrete to render the concrete structurally strong and resistant to water.

4,372,093
TRUSS OF LATTICE TYPE
Axel B. R. Ericsson, Holmsund, Sweden, assignor to Frelena AB, Umea, Sweden
PCT No. PCT/SE79/00253, § 371 Date Aug. 8, 1980, § 102(e) Date Aug. 8, 1980, PCT Pub. No. WO80/01297, PCT Pub. Date Jun. 26, 1980
PCT Filed Dec. 18, 1979, Ser. No. 200,497
Claims priority, application Sweden, Dec. 19, 1978, 7813012; Feb. 28, 1979, 7901795
Int. Cl.³ E04C *2/24*
U.S. Cl. 52—694 **8 Claims**

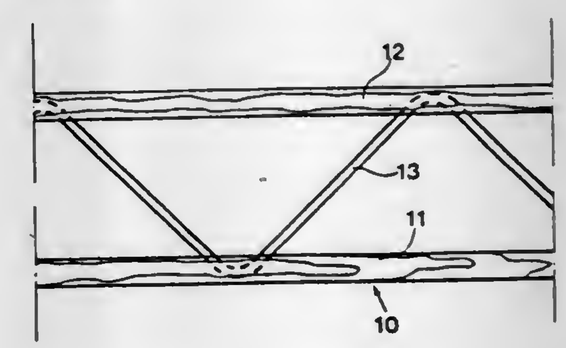

1. A truss of lattice type comprising an upper and a lower chord of wood material, a continuous web of steel in a generally zig zag configuration arranged between the chords and forming inclined struts, bent portions of the web being countersunk into recesses in the chords, said bent portions being fastened in the recesses by a hardening and binding substance which forms a layer replacing wood material removed to form the recesses, said substance having a strength at least equal to the strength of the wood material of said chords.

4,372,094

PROCESS FOR SIMPLE, RAPID AND ECONOMICAL TRANSFORMATION OF A WINDOW WITH A WOODEN OR METAL FRAME OR A SINGLE PANE FRAME INTO A WINDOW WITH A PLURALITY OF INSULATING PANES

Giovanni Boschetti, 6911 Vezio, Switzerland

Filed Jun. 23, 1980, Ser. No. 162,207

Claims priority, application Switzerland, Jun. 21, 1979, 5780/79; May 21, 1980, 3945/80

Int. Cl.^{3} E06B *1/14*

U.S. Cl. 52—741 **3 Claims**

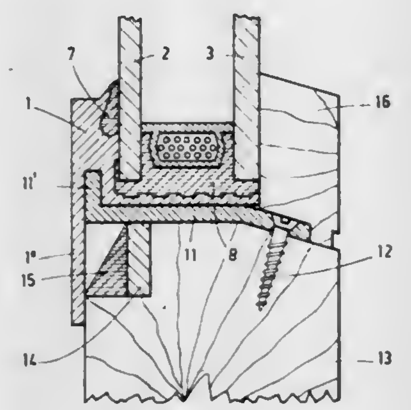

1. A process for double glazing openings in a building, comprising prefabricating a double glazed panel with two spaced sheets of glass and a frame having a trim strip and a recess between the trim strip and the frame, transporting the prefabricated glazed panel to a building having an opening to be double glazed, said opening having margins having exposed surfaces, inserting in the recess the upstanding flanges of brackets each of which has an upstanding flange, securing the brackets to the existing margins of said opening, said flanged brackets having end portions extending beyond said frame on the opposite side of said frame from said upstanding flanges, said brackets resting on the exposed surfaces of the margins of the frame, and passing fasteners through said end portions and into said existing margins of said opening.

4,372,095

TENNIS BALL PRESSURIZER

Allen De Satnick, 780 Boylston St., Prudential Ctr., No. 26F, Boston, Mass. 02199

Filed Feb. 23, 1976, Ser. No. 660,463

Int. Cl.^{3} B65B *31/08*

U.S. Cl. 53—79 **8 Claims**

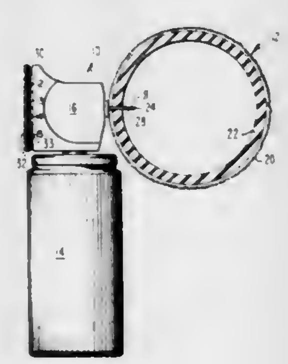

1. A tennis ball pressurizer comprising a hollow needle head having:

1. an internal bevel at a first end for forming a puncture hole in the tennis ball,
2. A bore portion extending from said first end for accommodating a plug cut from a tennis ball until the needle is removed from the ball,
3. a second end having a fitting for connection to a supply of gas having sufficient pressure for the interior of a tennis ball, and
4. means forming an orifice intermediate said ends, whereby
   (a) when said ball is punctured with said needle to dispose said first end and said orifice within said ball, said needle cuts the plug from the ball as it forms the puncture hole and retains the plug partially exposed beyond said first end, and gas entering said needle through said fitting end is vented into said ball through said orifice and
   (b) when said needle is withdrawn from said ball a partially exposed portion of said plug engages in and seals the puncture hole.

4,372,096

DEVICE FOR VACUUM SEALING OF PRESERVING JARS

Günter Baum, Auhofstrasse 24, 8051 Zurich, Switzerland

Filed Jun. 18, 1980, Ser. No. 160,488

Claims priority, application Switzerland, Jun. 23, 1979, 5839/79

Int. Cl.^{3} B65B *3/24;* **B67B** *31/04*

U.S. Cl. 53—88 **5 Claims**

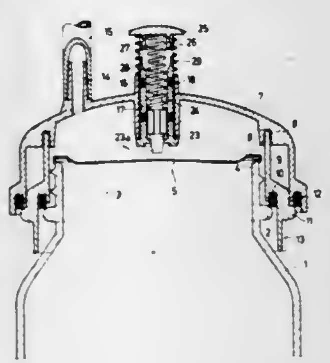

1. A device for sealing preserving jars which are provided with a thin metallic essentially disc-like lid, the latter having on its rim a washer of an easily deformable material, the device comprising a hood which is put over the mouth of the jar loosely covered with said lid, and which hood fits tightly on the jar to form an enclosed chamber over said lid, means for connecting a vacuum source to said hood to create a vacuum in said chamber so that the air left within the jar escapes, and an externally manually operated valve means in said hood adapted to press said lid against said jar and then to let the atmospheric air stream into the chamber after evacuation of air has been finished, and only after the lid has been pressed with adequate power, tightly sealing against the top edge of the jar, said valve means being disposed at the center of said hood and comprising a guide tube extending through the hood and terminating in the neighborhood of the lid, a hollow valve cylinder which is closed at its top end slidingly disposed in said tube in sealing engagement and terminating at its lower end in a shoulder to engage the bottom of said tube and function as a stop to limit upward movement of said cylinder, said cylinder being normally biased in its uppermost position, a valve plug slidingly disposed in said cylinder and extending downwardly below said lower end, the outer wall of said plug being spaced from the inner wall of said cylinder to form a valve chamber, said plug being in sealing engagement with said lower end when the plug is in its lowermost position, and allowing communication between said enclosed chamber and said valve chamber when in a raised position, said plug being normally biased in its lowermost position, and inlet bores in said cylinder communicating said valve chamber with the atmosphere, whereby when external manual pressure is initially applied to said top end of said cylinder to provide a downward stroke thereto, first said downwardly extending plug contacts said lid to press the same against said jar, and when continued external manual pressure in an amount to overcome the biasing of said plug is applied to said top end of said cylinder, said stroke continues with concurrent relative movement between said cylinder and said plug thereby causing communication between said enclosed chamber and the atmosphere via said valve chamber and said inlet bores.

4,372,097

METHOD OF MAKING AND FILLING A PACKAGE FOR SLICED COMMESTIBLE

Thor Wyslotsky, Alsip, Ill., assignor to TEC, Inc., Alsip, Ill.

Division of Ser. No. 81,647, Oct. 4, 1979, Pat. No. 4,268,530. This application Oct. 10, 1980, Ser. No. 195,776

Int. Cl.^{3} B65B *11/50, 25/08*

U.S. Cl. 53—405 **8 Claims**

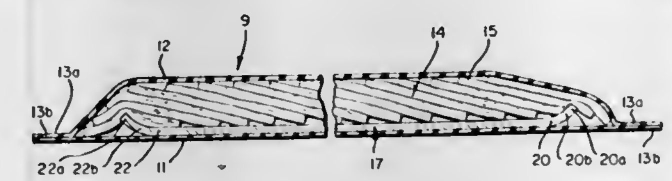

1. A method of producing a package of sliced commestible product, said method including the steps of:

providing a backing board formed from a sheet of planar material;

cutting the planar sheet into a generally rectangular shape with rounded corners having a smooth radius;

permanently deforming said rounded corners into upwardly projecting dispositions having a smooth radius;

slicing a commestible product and disposing the sliced commestible product into an overlapping array;

placing the overlapping array of sliced commestible product onto the backing board and covering the lateral edges and edges of the upwardly extending rounded corners of the backing board with said sliced commestible product, thereby to imbed the commestible product into the upwardly extending rounded corners; and

tightly enclosing the backing board and sliced commestible product borne thereon with a transparent film material.

4,372,098

METHOD OF MAKING AN APPLICATOR PACKAGE

Edwin W. Mason, Wyckoff, N.J., assignor to Mason Keller Corporation, Roseland, N.J.

Continuation-in-part of Ser. No. 85,813, Oct. 17, 1979, abandoned, which is a division of Ser. No. 639,961, Dec. 11, 1975, abandoned. This application May 5, 1981, Ser. No. 260,190

Int. Cl.^{3} B65B *5/02*

U.S. Cl. 53—412 **10 Claims**

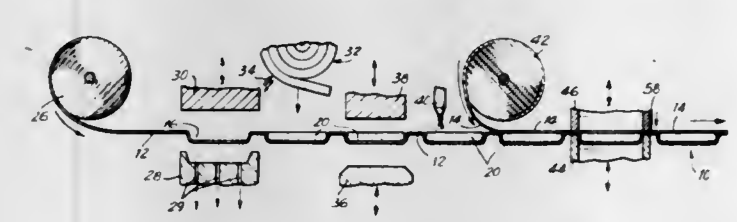

1. A method of forming applicator packages, said method comprising the steps of:

feeding a first continuous web of material having multilaminated layers comprising at least a foil layer and a heat activatable layer from a supply roll, said material comprising an aluminum foil having an inner coating of a thermoplastic material, such as polyethylene;

forming successively a plurality of recesses along said first web of material;

depositing a fabric applicator pad into each of said recesses;

securing said fabric applicator to the inside portion of each said recess by means of heat sealing said pad to the thermoplastic polyethylene lining of said aluminum foil;

dispensing a predetermined quantity of product to each said applicator pad;

feeding a second continuous web of material having multilaminated layers comprising at least a foil layer and a heat activatable layer from a supply roll so as to be continuously aligned in a coextensive manner with said first web of material, said second web of material comprising an aluminum foil having an inner coating of a thermoplastic material, such as polyethylene;

simultaneously heat sealing the entire peripheral marginal edges of each applicator package so as to form a thermoplastic hermetic closure about all sides of said recess leaving at least one corner portion of said webs of material unsecured together;

cutting off each said applicator package from said webs of material; and the thickness of any laminate layer is is from about 0.00035 to about 0.010 inch with said foil ranging from about 0.00035 to about 0.003 inch in thickness and said thermoplastic material ranging in thickness from about 0.0005 to about 0.002 inch.

4,372,099

METHOD OF PACKING POULTRY

Richard D. Linville, P.O. Box 7, Pleasant Valley, Iowa 52767

Filed Jan. 21, 1981, Ser. No. 227,142

Int. Cl.^{3} B65B *21/06;* **A22C** *21/00*

U.S. Cl. 53—415 **3 Claims**

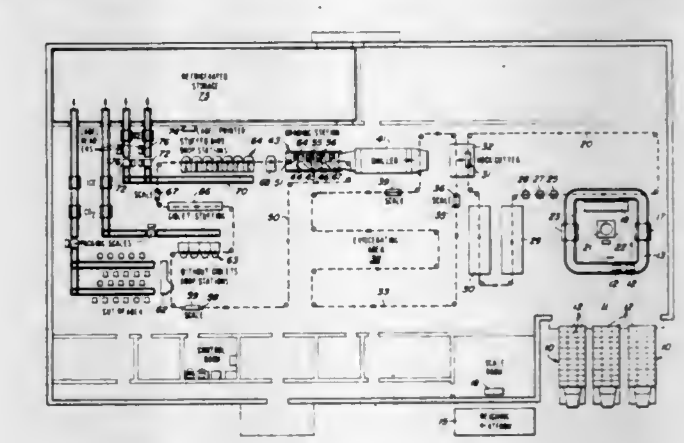

1. A method of selecting from a number of birds having random weights a predetermined number of birds each having a weight within a predetermined weight range, comprising the steps of

individually weighing said birds,

selecting a first bird weighing within said range,

selecting a second bird weighing within said range and which weighs more than a predetermined reference weight within said range if the weight of said first bird is less than said reference weight or which is less than said predetermined reference weight if the weight of said first bird is more than said reference weight,

selecting another bird weighing within said range and which weighs more than said reference weight if the average weight of the previously selected birds is less than said reference weight or which is less than said reference weight if the said averge weight is more than said reference weight, and

repeating said last step until said predetermined number of birds have been selected.

4,372,100

PROCESS AND APPARATUS FOR COMPOUNDING HYPERALIMENTATION SOLUTIONS

Robert A. Miller, Crystal Lake, Ill.; Kenneth W. Larson, Keene, N.H., and Joseph L. Schopen, Crystal Lake, Ill., assignors to Baxter Travenol Laboratories, Inc., Deerfield, Ill.

Continuation-in-part of Ser. No. 90,234, Nov. 1, 1979, abandoned. This application Dec. 17, 1981, Ser. No. 331,495

Int. Cl.³ B65B *3/06, 3/26*

U.S. Cl. 53—428 **8 Claims**

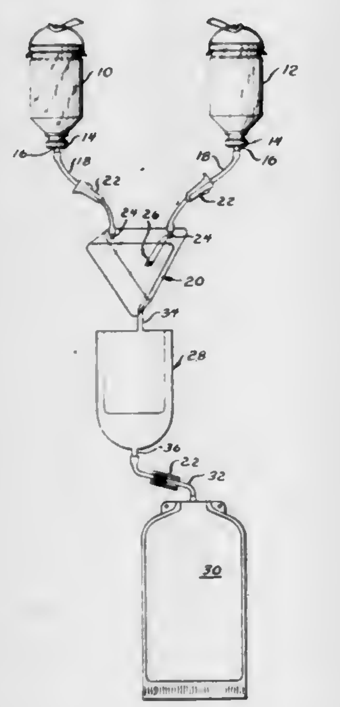

1. An apparatus useful for the sterile compounding of at least two solutions comprising:

a container for receiving the compounded solutions;

a mixing chamber in fluid-flow communication with the receiving container and with the source of each solution;

a filter interposed in the fluid-flow communication between the mixing chamber and receiving container for sterilizing the mixture after it is mixed in the chamber;

tubing connected between the filter and the receiving container for delivery of the sterilized mixture to the receiving container;

wherein the solutions may be delivered to the mixing chamber, mixed therein, delivered to the filter, and then delivered to the receiving container and wherein at least the sterilizing portion of the filter, the tubing, and the receiving container are a sterile unit; and

at least three uniform size tubes communicating with the mixing chamber for automatically controlling the quantity of each solution in the compounded mixture, each of said uniform size tubes being adapted for connection to a different solution source and through which the solution of the particular source can be delivered to the chamber, wherein the number of solution sources provided for a particular solution determines the quantity of that solution in the mixture.

4,372,101

APPARATUS AND PROCESS FOR PACKAGING SYNTHETIC FIBERS IN BALES

Hans Fleissner, Bettingerstr. 32, CH-4125 Riehen, Switzerland

Filed Feb. 8, 1980, Ser. No. 119,666

Claims priority, application Fed. Rep. of Germany, Feb. 17, 1979, 2906229

Int. Cl.³ B65B *1/24, 13/20*

U.S. Cl. 53—435 **27 Claims**

1. A process for forming synthetic fibers into bales by multistage compression, which comprises feeding synthetic fibers continuously to a plurality of depositing units; precompressing the fibers at the depositing units during deposition into a retaining bin positioned at each depositing unit to form a precompressed fiber parcel therein; transporting a plurality of the retaining bins containing the precompressed fiber parcels individually from each of the associated depositing units along first separate guide means to a first single guide means providing a single predetermined path extending from the separate guide means to a central press; then subjecting the fiber parcels

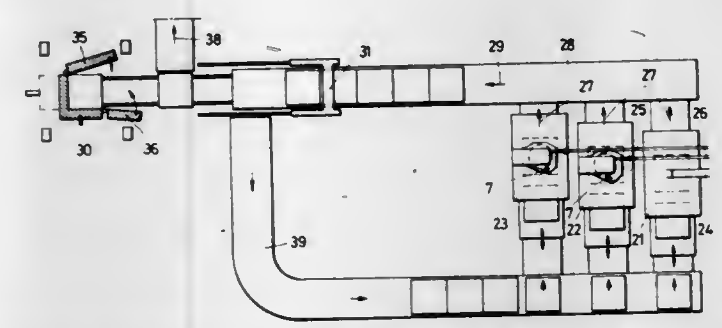

within the retaining bins, successively, to a finishing compression within said central press to form compacted bales; removing the compacted bales, successively, from the retaining bins and then transporting the empty retaining bins, successively, along a second single guide means back to second separate guide means operatively associated with each of the depositing units for returning empty retaining bins thereto.

4,372,102

METHOD AND APPARATUS FOR ENUMERATIVE DISPLAY AND DISPOSAL OF SURGICAL SPONGES

Rose M. McWilliams, 1065 S. Josephine, Denver, Colo. 80209

Continuation of Ser. No. 17,903, Mar. 5, 1979, Pat. No. 4,313,292. This application Dec. 11, 1980, Ser. No. 215,226

The portion of the term of this patent subsequent to Jan. 26, 1999, has been disclaimed.

Int. Cl.³ B65B *67/04, 67/12*

U.S. Cl. 53—474 **5 Claims**

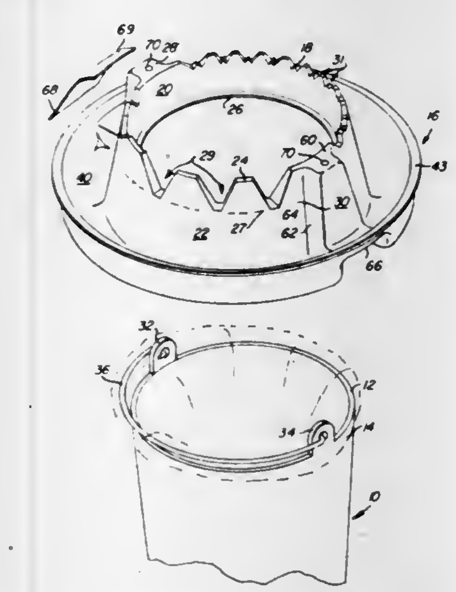

1. A method for verifying count and amount of fluid collected in used surgical sponges, said method comprising:

providing a single collection bag for ultimate disposal of all of the sponges;

providing a holder for holding a selected number of sponges so that each sponge is entirely visible;

separating and retaining said used sponges in said holder for visually verifying count and fluid content;

collecting any fluid lost from said sponges during their separation and retention in said holder and said collection bag;

providing containers which are each smaller than said collection bag and are sized to hold only said selected number of sponges from said holder; and

placing said sponges from said holder into one of said containers when said holder has been filled.

4,372,103

COMBINE DRIVE BELT SHIELDING

Irwin D. McIlwain, Lancaster, and James W. McDuffie, New Holland, both of Pa., assignors to Sperry Corporation, New Holland, Pa.

Filed Nov. 24, 1980, Ser. No. 209,781

Int. Cl.³ A01D *14/02*

U.S. Cl. 56—14.4 **10 Claims**

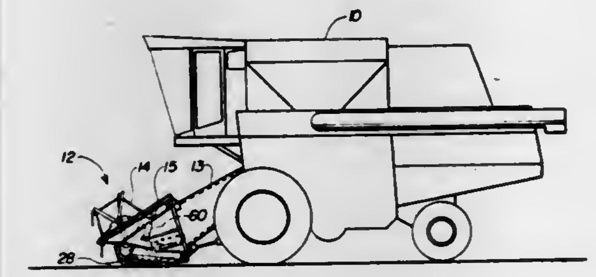

1. A crop harvesting header forwardly attached to a mobile crop harvesting machine, in combination, comprising:

a frame including opposing, substantially vertically inclined first and second sidewalls aligned substantially parallel to the forward direction of travel of said crop harvesting machine;

a cutterbar mounted forwardly on said frame transverse to said direction of travel between said sidewalls to sever standing crop material, said cutterbar having two reciprocable sickle assemblies, each said sickle assembly being positioned adjacent one of said sidewalls and extending substantially halfway across said header toward the other said sickle assembly, said sickle assemblies being reciprocably operable in a timed counter-stroking relationship;

drive means mounted on each said sidewall for respectively reciprocating the adjacent said sickle assembly, each said drive means including a drive sprocket, a driven sprocket mounted for movement relative to said drive sprocket, a drive belt drivingly entrained between said drive sprocket and said driven sprocket and a tensioning means engaged with said drive belt to maintain tension therein during the movement of said driven sprocket relative to said drive sprocket, each said drive belt having a plurality of teeth on one side thereof with an interstitial space between adjacent teeth, said teeth drivingly cooperating with corresponding indentations in said drive sprockets and said driven sprockets to provide a timed relationship between each corresponding said drive sprocket and said driven sprocket such that said timed counter-stroking relationship between said sickle assemblies can be positively maintained, each said drive belt being entrained about the corresponding said drive sprocket and said driven sprocket such that at least one portion of each said drive belt is positioned with said teeth projecting upwardly, whereby said interstitial spaces are subject to being filled with extraneous dirt and debris; and

shielding means mounted on each said sidewall adjacent to and above the respective said at least one portion of each said drive belt for preventing extraneous dirt and debris from falling onto the respective said at least one portion of each said drive belt and filling up said interstitial spaces, such that the timed relationship between each said sickle assemblies will not be disrupted due to said drive belt teeth not being able to engage said sprocket indentations, each said shielding means including sliding means for compensating for changes in length between the corresponding said drive sprocket and said driven sprocket due to the movement of the driven sprocket relative to the respective drive sprocket.

4,372,104

PICK-UP BALER FOR AGRICULTURAL MATERIAL

Jürgen Simonis, Wolfenbüttel, and Helmut Czok, Schladen, both of Fed. Rep. of Germany, assignors to Gebrüder Welger GmbH & Co. Kommanditgesellschaft, Wolfenbüttel, Fed. Rep. of Germany

Filed Jun. 16, 1981, Ser. No. 274,313

Claims priority, application Fed. Rep. of Germany, Jun. 18, 1980, 3022631

Int. Cl.³ A01D *39/00*

U.S. Cl. 56—341 **10 Claims**

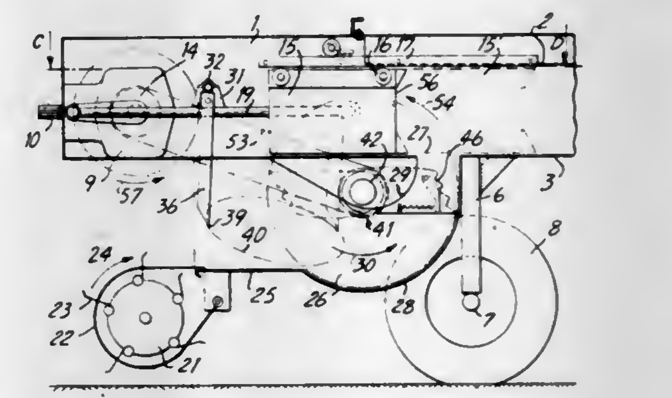

1. Agricultural pick-up baler comprising wall means forming a compressing channel having a front end and a rear end with an inlet opening located in the bottom of said compressing channel intermediate the ends thereof, a pressing ram located within said compressing channel, means for reciprocating said pressing ram in the front end-rear end direction, said reciprocating means including at least one connecting rod extending in the front end-rear end direction and attached to said pressing ram for imparting reciprocating movement to said pressing ram, a pick-up device located below said compressing channel for picking up harvested agricultural material, a supply passage located below said compressing channel and extending between said pick-up device and said inlet opening into said compressing channel for receiving agricultural material from said pick-up device and for delivering the agricultural material into said compressing channel, a conveying device movable through said supply passage for moving the agricultural material from said pick-up device into said supply passage toward the inlet opening in said compressing channel, a packing device movable along the path through said supply passage downstream from said conveying device for forcing the agricultural material from said supply passage through the inlet opening into said compressing channel wherein the improvement comprises that said conveying device includes a plurality of prongs attached to said connecting rod and extending downwardly from said compressing channel into said supply passage with said connecting rod imparting an elliptical path of travel within said supply channel to the ends of said prongs spaced from said connecting rod and located within said supply channel, and the path of travel of the ends of the prongs within said supply channel extends into the path of travel of said packing device within said supply passage.

4,372,105

REVERSE OSCILLATED LAY CABLE

Benjamin C. Ellis, Jr., Snellville, Ga., assignor to Western Electric Company, Inc., New York, N.Y.

Division of Ser. No. 63,009, Aug. 2, 1979, Pat. No. 4,266,399. This application Mar. 2, 1981, Ser. No. 239,716

Int. Cl.³ H01B *13/04*

U.S. Cl. 57—204 **2 Claims**

1. A cable, which comprises at least two concentrically disposed layers, each of said layers including a plurality of conductor units with each unit having a lay and comprising a plurality of concentrically disposed layers of twisted, insulated conductor pairs, each of said twisted conductor pairs having a unidirectional lay about a longitudinal axis of the unit which

varies among the units, the direction of lay of said units in each layer being periodically reversed to perturbate the unidirec-

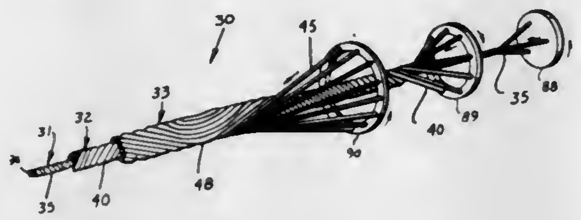

tional lay of said conductor pairs with the circular orientation of each unit relative to the other units in said each layer being substantially constant.

4,372,106
DRIVE SYSTEM FOR YARN FALSE TWISTING APPARATUS
Detlev Oberstrass, Tönisheide, Fed. Rep. of Germany, assignor to Barmag Barmer Maschinenfabrik AG, Remscheid, Fed. Rep. of Germany
Filed Jun. 12, 1981, Ser. No. 272,940
Claims priority, application Fed. Rep. of Germany, Jun. 14, 1980, 3022421; Dec. 23, 1980, 3048615
Int. Cl.[3] D02G *1/08*
U.S. Cl. 57—334 22 Claims

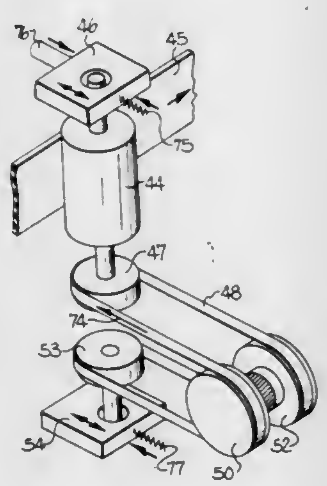

1. A yarn false twisting apparatus comprising
a frame,
a pair of twist imparting members, each having a generally flat yarn engaging friction surface,
means mounting said members to said frame for rotational movement wherein portions of the respective yarn engaging friction surfaces are disposed in opposing relationship and define a twisting zone therebetween,
drive means for operatively rotating each of said members, and such that a yarn may be advanced along a path of travel through said twisting zone while having twist imparted thereto, said drive means including
(a) a drive whorl rotatably mounted in a whorl support member,
(b) means mounting said whorl support member to said frame so that said drive whorl is rotatable about an axis generally parallel to the yarn path of travel through said twisting zone, and such that said drive whorl is adapted to be tangentially engaged by a main drive belt of said apparatus,
(c) a drive pulley rotatably mounted in said whorl support member and operatively connected to said drive whorl for concurrent rotation therewith,
(d) a belt pulley operatively connected to respective ones of said twist imparting members,
(e) an idler pulley,
(f) means rotatably mounting said idler pulley to said frame for rotation about an axis generally parallel to that of said drive pulley,
(g) drive belt means operatively interconnecting said drive pulley, said two belt pulleys, and said idler pulley for effecting concurrent rotation thereof with rotation of said drive whorl,
(h) at least one of said means mounting said whorl support housing, and said means mounting said idler pulley, being adjustable for movement with respect to said frame in a direction perpendicular to the yarn path of travel to thereby assure maintenance of an adequate tension on said drive belt means.

4,372,107
FALSE TWIST DEVICE
Douglas G. Hart, Greenville, S.C., assignor to High-Speed Spinning, Inc., Greenville, S.C.
Filed Dec. 17, 1980, Ser. No. 217,570
Int. Cl.[3] D01H *7/92;* D02G *1/04*
U.S. Cl. 57—346 8 Claims

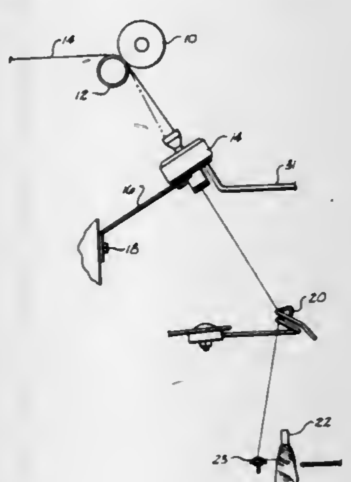

1. An apparatus for inserting a false twist in a strand of fibers as said strand is fed from between a pair of feed rolls to a takeup device, said apparatus comprising:
a casing,
a rotor rotatably carried in said casing;
a plurality of circumferentially spaced air entrapping members provided on said rotor;
a strand conveying tube extending axially through said casing and said rotor and being fixed to said rotor for rotation therewith;
a portion of said strand conveying tube being radially disposed from the rotational axis of said rotor;
said strand extending from between said pair of feed rolls through said strand conveying tube to said takeup device;
an upper portion of said strand conveying tube being in axial alignment with said rotor then has an intermediate portion that assumes an arcuate semi-circular configuration which is radially displaced from said axis and vertically positioned above said rotor and then has a lower portion extending through said rotor that is in axial alignment with said rotor; and
means for directing pressurized air into said air entrapping members provided on said rotor causing said rotor to be rotated whereby a false twist is imparted to said strand of fibers as said strand of fibers travels from said rolls to said takeup device.

4,372,108
ROTARY YARN GUIDE FOR TEXTILE MACHINES
Walter Uebelhart, Bienne; Beat Gilomen, Studen, and Claude Parel, Bettlach, all of Switzerland, assignors to A. Michael S.A., Switzerland
Filed Sep. 5, 1980, Ser. No. 184,314
Claims priority, application Switzerland, Sep. 7, 1979, 8084/79
Int. Cl.[3] D01H *7/18, 13/04*
U.S. Cl. 57—358 15 Claims

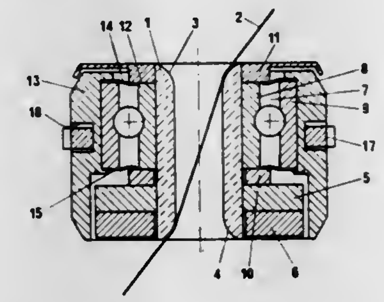

1. A rotary yarn guide device for cooperating with a spindle in a textile machine, comprising:
an externally cylindrical, hollow guide member having inlet and outlet ends for guiding the yarn;
a ball bearing surrounding the guide member and having inner and outer races, said inner race being rigid with said guide member;
a permanent magnet for cooperating with a spindle in order to rotate said guide member;
a magnet-supporting member for securing said permanent magnet with said guide member; and
an outer casing fixed to the outer race of said ball bearing.

4,372,109
ROLLER FOR FRICTION SPINNING APPARATUS
William M. Farnhill, 335 Colne Rd., Burnley, Lancashire, and Alan Parker, 7 Darvel Close, Breightmet, Bolton, Lancashire, both of England
Filed Apr. 10, 1981, Ser. No. 252,968
Claims priority, application United Kingdom, Apr. 19, 1980, 8012959
Int. Cl.[3] D01H *7/882*
U.S. Cl. 57—401 8 Claims

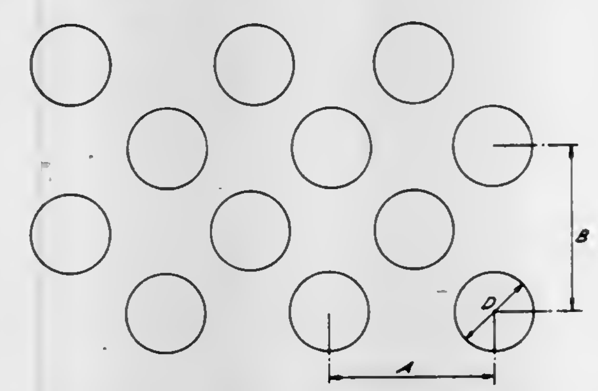

1. A roller for a friction spinning apparatus comprising a hollow perforated base member having on its outer surface a coating, characterized in that the thickness of the base member is at most 0.125 inches (3.2 mm), the percentage of hole area to total surface area of the base member, measuring the hole area as the summation of those at the smallest cross-section of each hole, is at least 25% and the diameter of each of the holes is at most 0.03 inches (0.75 mm).

4,372,110
NOISE SUPPRESSOR FOR TURBO FAN JET ENGINES
James C. Fletcher, Administrator of the National Aeronautics and Space Administration, with respect to an invention of, and Dah Y. Cheng, Palo Alto, Calif.
Filed Feb. 13, 1976, Ser. No. 657,903
Int. Cl.[3] F02K *1/44, 1/46*
U.S. Cl. 60—262 3 Claims

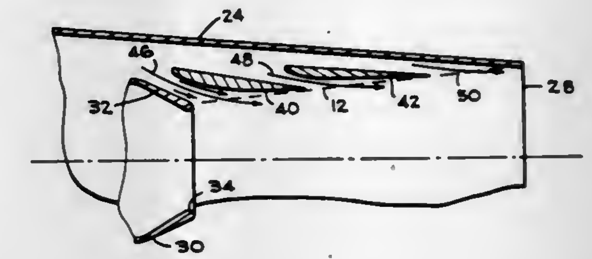

1. A noise suppressor for a fan jet engine of the type that includes an elongate hollow housing having an upstream inlet and a downstream outlet, an engine pod with a longitudinal axis, the pod supported within the housing and having a converging jet nozzle symmetrical to the axis and extending downstream of the housing outlet, the pod having a cross-sectional shape smaller than the housing to define an annular by-pass air path in said housing, and a fan within the housing adjacent the inlet for supplying air to the engine pod and the by-pass path, said noise suppressor comprising a nacelle having an upstream extremity affixed to said housing outlet and a downstream circular shaped extremity which is symmetrical to said axis and disposed downstream of said converging nozzle, said nacelle having an air impervious wall that converges from said upstream extremity to said downstream extremity and confines by-pass air from said engine housing, at least a first ring airfoil rigidly mounted within said nacelle, said ring airfoil being symmetrical to said axis and having an upstream extremity upstream of the downstream extremity of said nozzle, said ring airfoil having a downstream extremity upstream of downstream extremity of said nacelle, the downstream extremities of said nozzle, ring airfoil and nacelle being positioned on a jet nozzle flow zero radial velocity locus which has the shape of a frusto conical surface whereby the by-pass air is injected into the jet nozzle flow and the local shear stress between the streams is reduced, and further including a second ring airfoil rigidly mounted within said nacelle, said second ring airfoil being symmetrical to said longitudinal axis and having an upstream extremity positioned between said nacelle and the downstream extremity of said first ring airfoil, the downstream extremity of said second ring airfoil being located on said locus.

4,372,111
METHOD FOR CYCLIC REJUVENATION OF AN EXHAUST GAS FILTER AND APPARATUS
Kashmir S. Virk, Hopewell Junction, and Martin Alperstein, Fishkill, both of N.Y., assignors to Texaco Inc., White Plains, N.Y.
Filed Mar. 3, 1980, Ser. No. 126,815
Int. Cl.[3] F01N *3/18, 3/36*
U.S. Cl. 60—274 8 Claims

1. Method for treating an exhaust gas stream which carries an amount of particulate combustible matter, which method includes the steps of;
separating a minor flow of exhaust gas from the exhaust gas stream,
introducing the minor exhaust gas flow into contact with a catalytic material, and concurrently introducing a combustible medium with the minor exhaust gas flow into contact with said catalytic material to initiate combustion thereof,
intermixing said heated minor flow of exhaust gas with the

exhaust gas stream, to provide the mixed stream with a temperature exceeding the ignition temperature of the combustible particulate matter, and

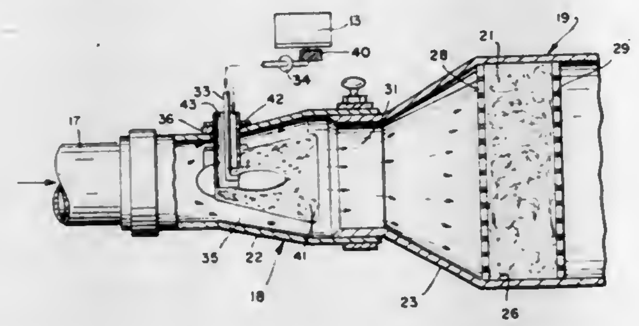

passing the mixed, heated gas stream into a main filter element in which the residual particulate matter is retained whereby to incinerate said particulate matter.

4,372,112
THIN-WALLED EXHAUST GAS MANIFOLD CASTING
Allen D. Ackerman, Troy; Conrad G. Perkey, Dearborn Heights; Robert A. Martin, Northville, and William M. Justusson, Farmington Hills, all of Mich., assignors to Ford Motor Company, Dearborn, Mich.
Filed Jul. 1, 1980, Ser. No. 164,868
Int. Cl.³ F01N *7/10, 3/34*
U.S. Cl. 60—323 **1 Claim**

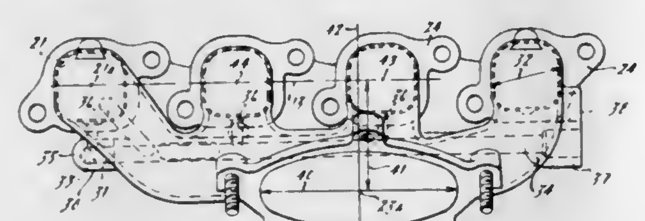

1. An exhaust gas manifold casting for an internal combustion engine, comprising:

(a) inlet duct walls defining a plurality of inlet ducts each having an inlet opening, said inlet openings being arranged in a common plane and having the centers of said inlet openings lying along a straight line;

(b) outlet duct walls defining a singular shallow outlet duct intersecting and communicating with said inlet ducts, said outlet duct describing an ellipse in cross section and having an outlet opening with a center located from said straight line a distance no greater than the major dimension of said elliptical cross section, said outlet duct having an axis passing through the center of said elliptical cross section and projecting between axes extending through the centers of the inlet openings of the innermost inlet ducts, said outlet and inlet duct walls consisting essentially of nodular cast iron and having a generally uniform wall thickness in the range of 0.12–0.15 inches; and

(c) an integrally cast rib extending across at least a plurality of said inlet ducts to reduce flexing of said manifold in service.

4,372,113
PIPELINE ENERGY RECAPTURE DEVICE
James L. Ramer, Rte. 1, Box 382, Whitestown, Ind. 46075
Filed Jan. 15, 1981, Ser. No. 225,170
Int. Cl.³ F01D *1/00*
U.S. Cl. 60—325 **11 Claims**

1. Apparatus for recapturing flow power of a fluid in a pipeline comprising:

(a) a constriction in said pipeline;

(b) a first bypass path for directing a first portion of said fluid past said constriction;

(c) a second bypass path for directing a second portion of said fluid past said constriction;

(d) means, disposed in said second bypass path, for accelerating a portion of the fluid in said first bypass path;

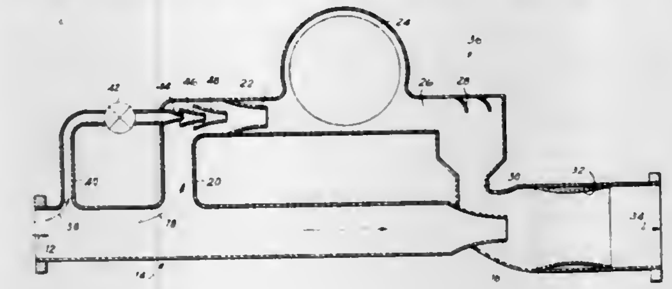

(e) means for producing a mechanical output from the fluid in said first and second bypass paths,

(f) means for returning substantially all said fluid from said first and second bypass paths to said pipeline at a point downstream of said constriction.

4,372,114
GENERATING SYSTEM UTILIZING MULTIPLE-STAGE SMALL TEMPERATURE DIFFERENTIAL HEAT-POWERED PUMPS
Francis L. Burnham, Orangeburg, S.C., assignor to Orangeburg Technologies, Inc., Orangeburg, S.C.
Filed Mar. 10, 1981, Ser. No. 242,243
Int. Cl.³ F03G *7/06*
U.S. Cl. 60—325 **27 Claims**

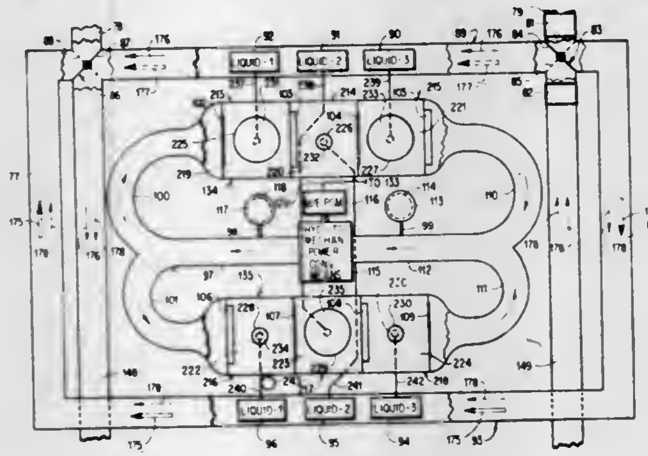

1. A generating system for converting flow of a first liquid to electrical power comprising:

a. A plurality of multiple-stage small temperature differential heat-powered pumps;

b. a second liquid heating means operable to heat a second liquid to a hot temperature, where it becomes a hot liquid which is divertable into said plurality of multiple-stage small temperature differential heat-powered pumps;

c. a third liquid cooling means operable to cool a third liquid to a cold temperature where it becomes a cold liquid which is divertable into said plurality of multiple-stage small temperature differential heat-powered pumps;

d. a hydraulic-to-mechanical power conversion means operative to convert the flow of said first liquid to mechanical power with the input to said hydraulic-to-mechanical power conversion means connected to the output of said plurality of multiple-stage small temperature differential heat-powered pumps and the output of said hydraulic-to-mechanical power conversion means connected to the input of said plurality of multiple-stage small temperature differential heat-powered pumps; and

e. a mechanical-to-electrical power conversion means connected to said hydraulic-to-mechanical power conversion means and operative to produce electrical power.

4,372,115
OIL BACKED STIRLING ENGINE DISPLACER DIAPHRAGM
Jeffrey S. Rauch, Albany, N.Y., assignor to Mechanical Technology Incorporated, Latham, N.Y.
Filed Jun. 5, 1981, Ser. No. 270,974
Int. Cl.³ F02G *1/04*
U.S. Cl. 60—520 **15 Claims**

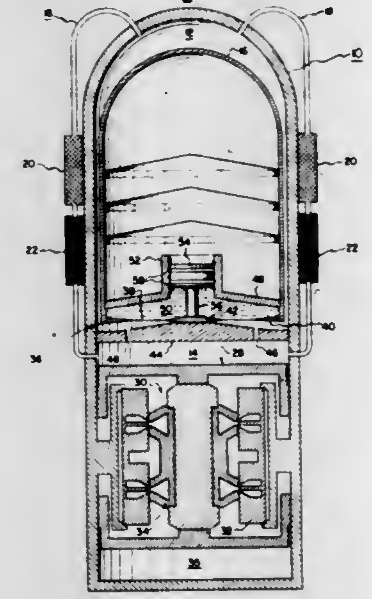

1. In a free piston Stirling engine having a vessel defining therein a working space in which oscillates a displacer, and a flexible diaphragm connected between said vessel and said displacer, wherein the improvement comprises:

a liquid cavity having two sides and bounded on one of said sides by said diaphragm, and bounded on the other of said sides by a bounding member; and

means for accommodating the volumetric changes caused by the deflection of said diaphragm into and out of said cavity when said displacer oscillates;

whereby pressure in said working space is transmitted through said diaphragm and the liquid in said cavity to said bounding member so that pressure stresses in said diaphragm are reduced.

4,372,116
STIRLING ENGINE CONTROL MECHANISM AND METHOD
John J. Dineen, Durham, N.H., assignor to Mechanical Technology Incorporated, Latham, N.Y.
Filed Jan. 26, 1981, Ser. No. 228,457
Int. Cl.³ F02G *1/06*
U.S. Cl. 60—525 **20 Claims**

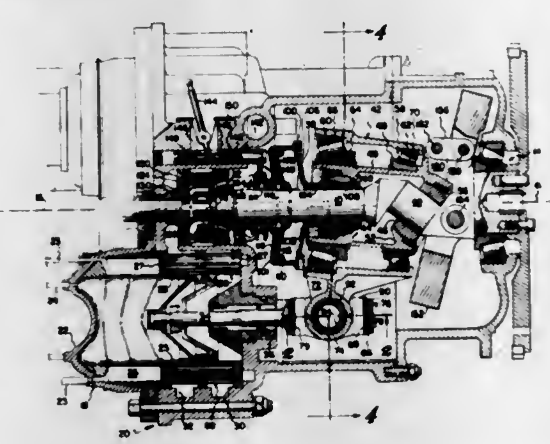

1. A mechanism for conversion between reciprocating motion of a reciprocating member and rotating motion of a rotating shaft, comprising:

a rotatable shaft having a straight portion disposed on an axis of rotation, and an offset portion whose axis extends at an angle to said axis of rotation;

a hub mounted on said shaft for rotation relative thereto and having one axial end portion axially slidably mounted on said offset portion, and the other axial end portion axially slidably mounted on said straight portion;

at least one arm mounted on said hub and extending radially therefrom, whereby said arm rocks in a reciprocating arcuate motion when said shaft rotates and said hub nutates relative to said rotating shaft; and

means for controllably moving said hub axially relative to said shaft, thereby changing the angle of inclination of said hub relative to said shaft axis of rotation to control the stroke of said arm.

4,372,117
BRAKE MASTER CYLINDER FOR MOTOR VEHICLES
Hideyuki Kobayashi, Toyota, Japan, assignor to Aisin Seiki Kabushiki Kaisha, Kariya, Japan
Filed Sep. 30, 1980, Ser. No. 192,202
Claims priority, application Japan, Oct. 8, 1979, 54-129607
Int. Cl.³ B60T *11/20*
U.S. Cl. 60—562 **7 Claims**

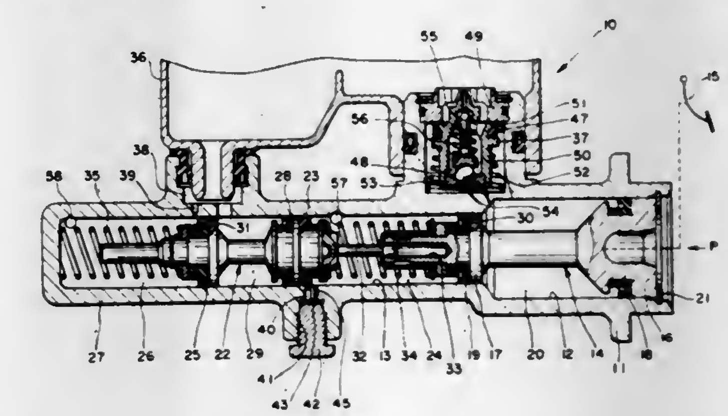

1. A brake master cylinder for motor vehicles comprising in combination:

a cylinder body provided with a large diameter bore and a small diameter bore therein,

a stepped primary piston provided with a large diameter portion slidably fitted in said large diameter bore and a small diameter portion slidably fitted in said small diameter bore,

a secondary piston slidably fitted in said small diameter bore and associated with said primary piston,

a first fluid chamber defined between said large and small diameter portions of said primary piston,

a primary pressure chamber defined between said small diameter portion of said primary piston and one end of said secondary piston,

a secondary pressure chamber defined between said cylinder body and the other end of said secondary piston,

a second fluid chamber defined between said one end of secondary piston and said other end thereof and being in continuous fluid communication with a reservoir, and

compensation port means disposed in operative relationship with said secondary piston and in continuous fluid communication with said primary pressure chamber for providing fluid-flow communication between said primary pressure chamber and said second fluid chamber during brake release and for preventing fluid-flow communication between said primary pressure chamber and said second fluid chamber upon brake application.

4,372,118
LIQUID CABLE
Herman J. Andresen, 726 Carriage Hill Dr., Glenview, Ill. 60025
Continuation of Ser. No. 735,799, Oct. 26, 1976, abandoned. This application Jun. 19, 1978, Ser. No. 916,869
Int. Cl.³ F15B *7/08*
U.S. Cl. 60—583 **1 Claim**

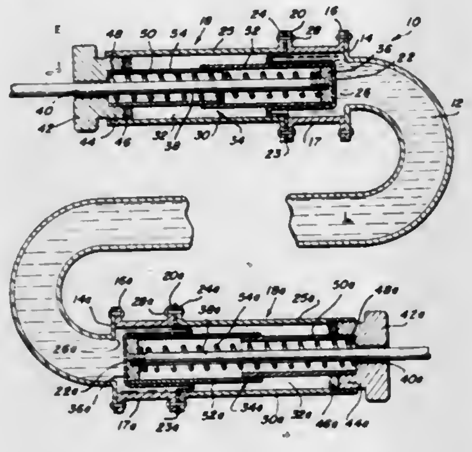

1. A liquid cable device for receiving and transmitting mechanical force and displacement, comprising first and second terminal units adapted to receive and transmit the mechanical force and displacement, each terminal unit including piston means mounted within a chamber formed in said unit for movement therein between predetermined stroke limits, and biasing means for biasing said piston means towards one end of said chamber for all positions of the piston means within the chamber; tubing means having a predetermined interior volume interconnecting the corresponding one ends of the terminal unit chambers; and a substantially non-compressible liquid disposed within said tubing means interior, the volume of said liquid being substantially greater than the tubing means interior volume and effecting a predetermined displacement of each of said piston means within the respective chamber whereby each piston means assumes a predetermined rest position intermediate the stroke limits thereof and is disposed a substantial distance from each stroke limit, the internal forces on the piston means being in balanced relation only when each piston means is in said rest position, the piston means of said terminal units coacting with one another to maintain the liquid within the tubing means under a continuous substantial positive pressure with respect to the environmental pressure of said device for all positions of adjustment of the piston means within said chambers, the application of an external mechanical force to effect displacement of a selected terminal unit piston means while in said rest position in either a direction towards or away from the chamber one end simultaneously altering the energization of the biasing means associated therewith and affecting an imbalance of internal forces within said selected unit chamber, the force imbalance within said selected unit chamber effecting a predicted correlative displacement of the non-selected terminal unit piston means in all possible stroke positions and simultaneously altering the energization of the biasing means associated therewith in opposite relation to the biasing means for the selected terminal unit piston means, upon removal of the external force the imbalance of internal forces within both of the terminal unit chambers effecting automatic return of both piston means to their respective predetermined rest positions, wherein the tubing means includes a liquid passage restrictor and a liquid pressure accumulator, said restrictor preventing substantially instantaneous transmission of the entire volume of liquid between the terminal units displaced by the continued application of an external input displacement force applied to the selected terminal unit piston means and moving the latter from the rest position towards the chamber one end of the selected terminal unit; said accumulator including a piston element disposed within an auxiliary chamber communicating with the tubing means at a location upstream from said restrictor and downstream of said selected terminal unit, and biasing means for urging said piston element into a predetermined first position within the auxiliary chamber, the volume of liquid displaced by the input displacement force and not instantaneously transmitted to the non-selected terminal unit accumulating within the auxiliary chamber and effecting displacement of the accumulator piston element from said first position and substantially simultaneous energizing of the accumulator biasing means such that said volume of liquid within said auxiliary chamber will be continually urged through said restrictor and to the non-selected terminal unit until said piston element returns to said first position and the external displacement input force continues to be applied to the selected terminal unit piston means and wherein the tubing means includes a tributary tubing member having one end thereof communicating with said tubing means upstream of said restrictor and the opposite end communicating with a third terminal unit, an input displacement force continually applied at said selected terminal unit positioned upstream of said accumulator generating a liquid displacement transmitted to said third terminal unit as a first output displacement, and subsequently to said non-selected terminal unit as a delayed output displacement.

4,372,119
METHOD OF AVOIDING ABNORMAL COMBINATION IN AN INTERNAL COMBINATION ENGINE AND AN ARRANGEMENT FOR CARRYING OUT THE METHOD
Per S. Gillbrand, Enhörna; Simon E. Axelson, Huddinge, and Sten R. Jiewertz, Järna, all of Sweden, assignors to Saab-Scania Aktiebolag, Sodertalje, Sweden
Filed May 21, 1980, Ser. No. 151,897
Claims priority, application Sweden, Oct. 29, 1979, 7908944
Int. Cl.³ F02B *37/00*
U.S. Cl. 60—600 **6 Claims**

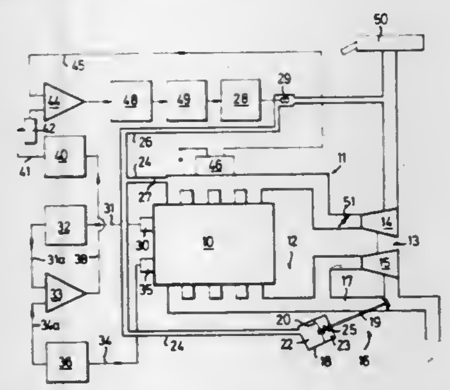

1. A method of avoiding abnormal combustion, so-called knocking, in a supercharged internal combustion engine, comprising the steps of monitoring a parameter representative of the combustion conditions prevailing in the engine, generating a first signal representing said parameter, sensing the engine speed, generating a second signal proportional to the engine speed and representing optimum combustion in the engine, comparing said first signal with said second signal to obtain a deviation signal, whereby, when abnormal combustion occurs in the engine, said deviation signal initiates an adjustment of the engine operating conditions for eliminating abnormal combustion, wherein the engine operating conditions are adjusted by reducing the engine induction pressure in response to the magnitude of said deviation signal to a level providing normal combustion.

4,372,120
V-TYPE ENGINE INTAKE WITH VIBRATION ISOLATED MANIFOLD CONNECTOR
Harry S. Ford, Jr., Birmingham, and Nshan Hamparian, Brighton, both of Mich., assignors to General Motors Corporation, Detroit, Mich.
Continuation of Ser. No. 88,298, Oct. 26, 1979, abandoned. This application Feb. 9, 1981, Ser. No. 232,890
Int. Cl.³ F02B *37/00, 75/22*
U.S. Cl. 60—605 **5 Claims**

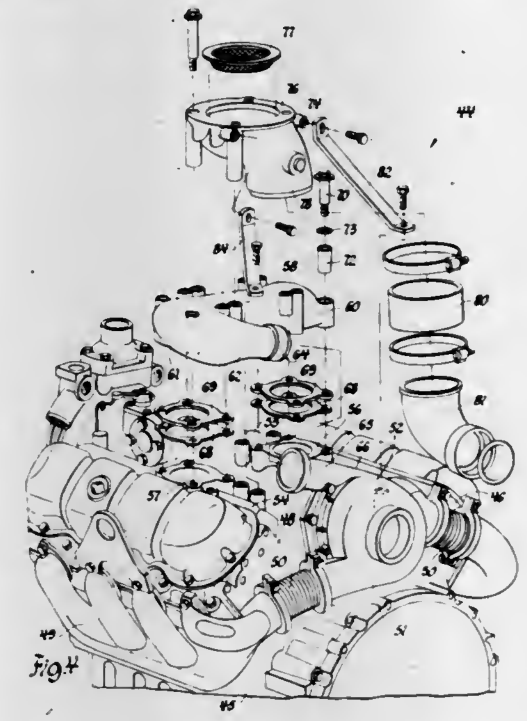

1. In combination in a V-type engine having a pair of angularly disposed cylinder banks extending from a common crankcase and defining an intermediate valley,

a pair of air intake manifolds secured one to each of said cylinder banks and spaced laterally from one another on opposite sides of the valley to deliver air charges to the engine cylinders,

a manifold connector mounted upon and connecting with both said intake manifolds to carry charging air from a common supply to the manifolds, and

isolation mounting means between said connector and said manifolds to limit the transmission of noise creating vibrations between the manifolds and cylinder banks and to the manifold connector, said isolation mounting means including resilient gaskets operatively disposed between each of said manifolds and said connector to seal the joints therebetween and isolated controlled compression securing means operatively connected between said connector and each associated manifold member and resiliently isolated from at least one of them, while retaining said connector on said manifolds with predetermined partial compression of said gaskets so as to provide complete resilient isolation of the connector from both the manifolds on which it is mounted.

4,372,121
POWER-PLANT
Sergei S. Sokolov, ulitsa Nevzorovoi, 6, kv. 67; Vadim R. Komovsky, ulitsa Novoligovskaya, 13, kv. 53; Leonid I. Vlasov, Drezdenskaya ulitsa, 18, kv. 18; Boris M. Boretsky, ulitsa Furmanova, 14, kv. 46, and Grigory V. Shiryaev, ulitsa Matrosa Zheleznyaka, 53, kv. 60, all of Leningrad, U.S.S.R.
Filed Mar. 16, 1981, Ser. No. 244,076
Int. Cl.³ F02B *37/00*; F02D *23/00*
U.S. Cl. 60—606 **3 Claims**

1. A power-plant comprising:

an internal-combustion engine;

a turbo-charger providing the supercharging of said internal-combustion engine and having at least one turbine and one compressor, an inlet of said internal-combustion engine communicating with an outlet of said compressor of said turbo-charger, an inlet of said turbine communicating with an outlet of said internal-combustion engine;

a by-pass duct communicating said outlet of said compressor with said inlet of said turbine;

an auxiliary combustion chamber arranged in said by-pass duct; an air flow rate adjusting device for air by-passed from said compressor to said turbine, having a throttling member;

a drive linked with said throttling member and providing

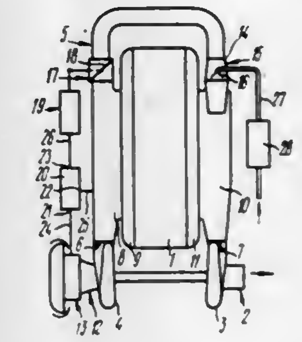

variation of position of said throttling member in said by-pass duct;

an air flow sensor installed at said inlet of said compressor; and

a comparison unit having a first input, a second input and an output, said first input communicating with said by-pass duct between said outlet of said compressor and said air flow rate adjusting device, said second input communicating with said air flow sensor, and

said output of said compression unit communicating with said drive for changing position of said throttling member.

4,372,122
PROPELLANT OPERATOR
Heinrich F. von Wimmersperg, 15721 Rosemont Rd., Detroit, Mich. 48223, assignor to Heinrich von Wimmersperg, Detroit, Mich.
Filed Jun. 17, 1980, Ser. No. 160,392
Int. Cl.³ F01B *29/08*
U.S. Cl. 60—634 **23 Claims**

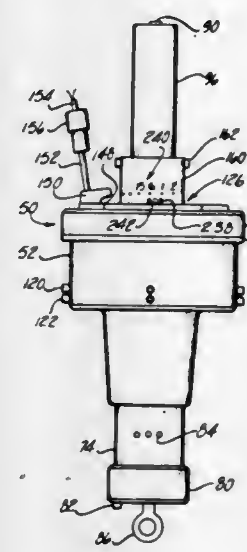

1. A propellant activated operator comprising a receiver body, a plurality of separate cartridge chambers in said body each constructed and arranged to receive a cartridge therein, a closure member carried by said body and constructed and arranged to close off the ends of said cartridge chambers through which cartridges can be inserted, a receiving chamber carried by said body, a separate passage associated with each of said cartridge chambers and constructed and arranged to

connect each cartridge chamber with said receiving chamber, a valve associated with each cartridge chamber and its passage and constructed and arranged to be normally closed so that its cartridge chamber does not communicate with said receiving chamber and to open when a cartridge in its chamber is fired so that gases produced by the firing of the cartridge will pass from such cartridge chamber through its associated passage and into said receiving chamber, and firing means carried by said body and constructed and arranged to rapidly fire in sequence, cartridges received in said cartridge chambers of said body, said firing means having a distributor with a contact associated with each cartridge chamber and constructed and arranged to be in contact with an electrically energized primer of a cartridge received in said cartridge chamber, a plurality of second electric contacts each connected by an electric conductor with only one of said first contacts, a rotor having a rotor contact constructed and arranged to sequentially engage said second contacts to sequentially direct an electric current to said first contacts to fire cartridges received in said cartridge chambers in a predetermined firing order, a pawl carried by said rotor, a plurality of stops disposed in circumferentially spaced apart relationship about the axis of rotation of said rotor and each constructed and arranged to engage with said pawl to releasably restrain movement of said rotor when said rotor contact engages one of said second contacts, and an actuator associated with each said valve and constructed and arranged to be moved to a first position by opening of said valve to engage said pawl and release it from said stop to permit said rotor to be moved so that it is disengaged from all of said second contacts and to be moved to a second position by closing of said valve to disengage its actuator from said pawl to permit said rotor to be moved until said pawl bears on another stop to thereby engage said rotor contact with another of said second contacts.

4,372,123
THERMAL-GRAVITY ENGINE
Kenneth L. Austin, 909 E. Cypress Ave., Lompoc, Calif. 93436
Filed Sep. 2, 1981, Ser. No. 298,599
Int. Cl.³ F03G *7/00*; F03B *17/06*
U.S. Cl. 60—639 **10 Claims**

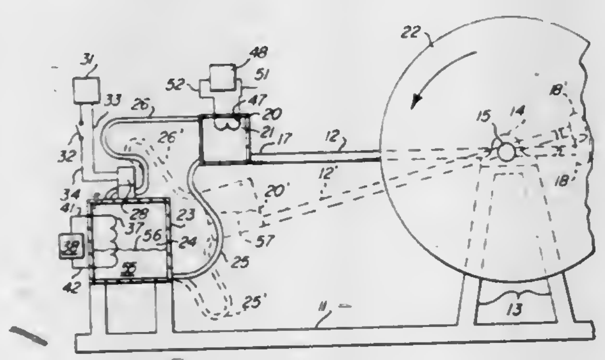

1. A thermal-gravity engine comprising:
at least one lever arranged to reciprocate between up and down positions about a pivot for actuating an output shaft;
fluid loading and unloading means including a weight chamber on one end of said lever that is normally held in an up position by a counterweight on said lever opposite said weight chamber and a storage chamber disposed below said weight chamber, a first flow line coupled in flow communication with lower portions of said chambers, and a second flow line coupled in flow communication with the upper portions of said chambers to form a closed, fluid-flow system which contains a working fluid;
thermal input means associated with at least one of said chambers to change the temperature in said one chamber to produce an internal pressure differential between the upper portions of said chambers; and
blocking means for said upper flow line to normally block fluid flow through said upper flow line and arranged to allow fluid flow when said lever is moved to the down position,
whereby, with the weight chamber up and upon the production of said internal pressure differential, the working fluid is pumped from said storage chamber into said weight chamber via said first flow line until the weight thereof is sufficient in relation to said counterweight to cause said one end of the lever to move to the down position under the force of gravity in a downstroke to apply a torque to said output shaft, the second flow line then being opened to provide an equalizing of the pressures in the upper portion of said chambers to allow the drainage of the working fluid from said weight chamber via said first flow line back into the storage chamber so that the weight of the weight chamber is reduced sufficiently to cause the lever to move up in an upstroke due to the force of gravity acting on said counterweight.

4,372,124
RECOVERY OF POWER FROM THE VAPORIZATION OF NATURAL GAS
Charles L. Newton, Bethlehem, and Dennis L. Fuini, Schnecksville, both of Pa., assignors to Air Products and Chemicals, Inc., Allentown, Pa.
Filed Mar. 6, 1981, Ser. No. 241,185
Int. Cl.³ F01K *17/00*
U.S. Cl. 60—648 **4 Claims**

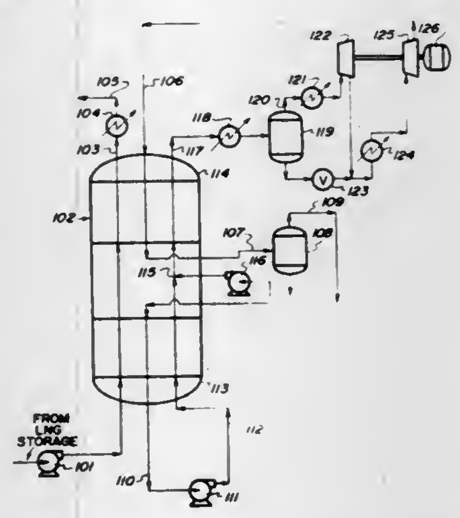

1. A method for recovering power from the vaporization of liquefied natural gas which method comprises at least partially liquefying a multicomponent mixture with said liquefied natural gas, pumping said at least partially liquefied multicomponent mixture to an elevated pressure, heating said pressurized multicomponent mixture to form a vapor, expanding said vapor through expansion means, and recovering power from said expansion means, characterized in that said pressurized multicomponent mixture is heated to provide a two phase mixture, said two phase mixture is separated to provide a vapor and a liquid, said vapor is expanded in a first expander, the expanded vapor and a two phase mixture formed by expanding the liquid from said phase separator through a valve are heated and the resulting vapor passed through a second expander, and power is recovered from first and second expanders.

4,372,125
TURBINE BYPASS DESUPERHEATER CONTROL SYSTEM
Royston J. Dickenson, Scotia, N.Y., assignor to General Electric Company, Schenectady, N.Y.
Filed Dec. 22, 1980, Ser. No. 218,765
Int. Cl.³ F01K *13/02*
U.S. Cl. 60—660 **11 Claims**

1. In combination with a steam turbine having a bypass system for diverting excess steam supplied by a steam generator from the turbine and including means for desuperheating

the bypassed steam and at least one steam flow control valve, a steam desuperheater control system for controlling the temperature of desuperheated steam, comprising:
temperature determining means providing a representation of the temperature of the desuperheated steam;
first control means operatively connected to said desuperheating means and responsive to said temperature representation to provide corrective action to said desuperheat-

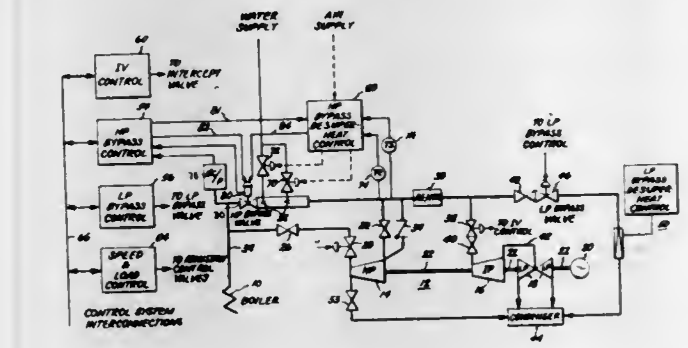

ing means tending to maintain the temperature of the desuperheated steam at a preselected temperature reference value;
steam flow determining means providing a representation of steam flow rate in said bypass subsystem; and
second control means responsive to said steam flow representation and interactive with said first control means to alter said corrective action as a function of steam flow rate in said bypass subsystem.

4,372,126
CLOSED CYCLE SYSTEM FOR GENERATING USABLE ENERGY FROM WASTE HEAT SOURCES
Joseph F. Sebald, deceased, late of Bloomfield, N.J. (by Dorothy Davis Sebald, executrix), assignor to Heat Power Products Corporation, Bloomfield, N.J.
Filed May 1, 1981, Ser. No. 259,531
Int. Cl.³ F01K *11/00*
U.S. Cl. 60—669 **5 Claims**

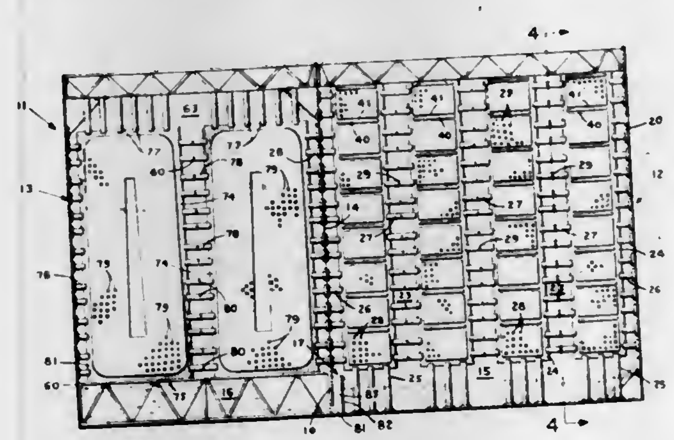

1. A closed cycle system for recovering usable energy from the difference in temperature between a heat source and a heat sink wherein the available temperature difference is at least 40° F., includes,
a. an evaporator-condenser assembly having a non-contacting evaporating section, a non-contacting condensing section, and a common partition mounted in and shared between the evaporating section and the condensing section so as to define respectively therein an evaporating chamber having a storage well for the operating fluid for the closed cycle system and a condensing chamber having a condensate well for condensed operating fluid, and said common partition having transport opening means at the lowermost end thereof,
b. a short upwardly extending baffle means connected in the evaporating section a predetermined spaced distance from the common partition to form therewith a U-shaped seal and transport passage for passing predetermined quantities of the condensed operating fluid from the condensate well to the storage well as a function of the difference in the level of operating fluid in the respective condensate well and storage well,
c. said evaporating section including, means for evaporating operating fluid including, pumping means connected to deliver heated fluid from said heat source, and a return means for returning said heated fluid to said heat source,
d. energy converting means connected to said evaporator-condenser assembly having an inlet communicating with said evaporating section to receive the vaporized operating fluid therefrom and operable to convert the heat energy in said vaporized operating fluid to usable energy, and an exhaust outlet for spent vaporized operating fluid,
e. said condensing section communicating with the exhaust outlet of said energy converting means and including, means for condensing the exhausted vapor from said energy converting means including, pumping means connected to deliver cooling fluid from said heat sink, and a return means for returning the cooling fluid to said heat sink.

4,372,127
APPARATUS FOR HEAT TRANSFORMATION
Erich Pöhlmann, Kulmbach, and Hans-Peter Doetsch, Altdrossenfeld, both of Fed. Rep. of Germany, assignors to Christian Schneider, Kulmbach, Fed. Rep. of Germany
Filed Nov. 10, 1980, Ser. No. 205,719
Claims priority, application Fed. Rep. of Germany, Nov. 14, 1979, 2945973
Int. Cl.³ F25B *9/00*
U.S. Cl. 62—6 **24 Claims**

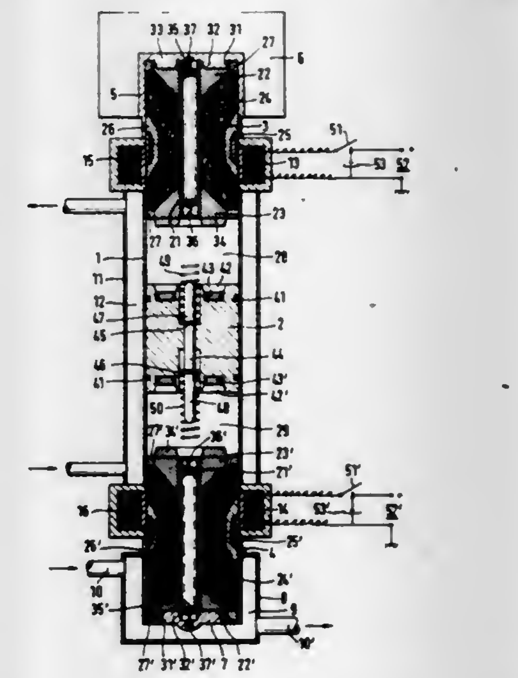

1. Apparatus for heat transformation comprising a cylinder closed to the outside,
a working piston movably confined within a central part of said cylinder,
at least one impact piston movably confined within and adjacent one end of said cylinder and including regenerator means,
a heat transfer fluid acting as a working medium within said cylinder,
means for supplying heat to the cylinder from the outside adjacent the end containing the impact piston,
means to electromagnetically urge the impact piston towards the working piston,
means for withdrawing heat from the outside surface of the cylinder.

4,372,128
IN-LINE CRYOGENIC REFRIGERATION APPARATUS OPERATING ON THE STIRLING CYCLE
Domenico S. Sarcia, Carlisle, Mass., assignor to Oerlikon-Buhrle U.S.A. Inc., New York, N.Y.
Filed Nov. 2, 1981, Ser. No. 316,995
Int. Cl.³ F25B *9/00*
U.S. Cl. 62—6 **11 Claims**

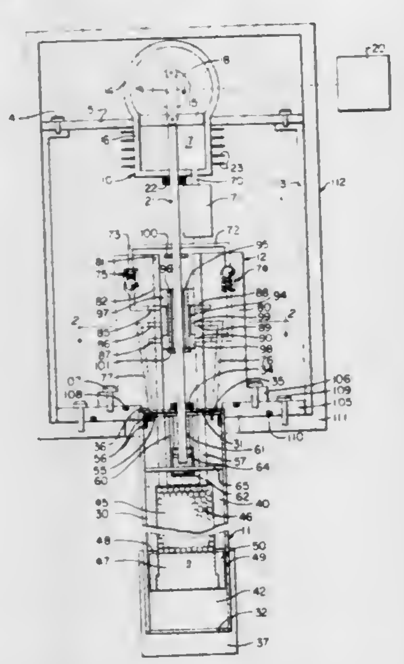

1. A cryogenic apparatus for delivering refrigeration to an external load, comprising in combination:
(a) compressor means having a rotary-driven reciprocating piston;
(b) expander means having displacer means capable of reciprocating motion to define within said expander means a warm fluid chamber and a cold fluid chamber, said chambers being of variable complementary volumes;
(c) thermal storage means providing fluid communication between said fluid chambers;
(d) driving means mechanically linking said piston and said displacer means to move them in phase along a common axis;
(e) fluid flow passage means connecting said compressor means and said expander means; and
(f) fluid flow control means associated with said fluid flow passage means and arranged so as to
(1) cut off fluid flow from said compressor means to said expander means throughout a major part of the compression stroke of said compressor;
(2) permit flow of high-pressure fluid from said compressor means to said warm fluid chamber during the completion of said compression stroke;
(3) cut off fluid flow from said expander means to said compressor means throughout a major part of the transference of fluid from said warm chamber to said cold chamber through said regenerator; and
(4) then permit flow of fluid from said expander means to said compressor means expanding said fluid and developing refrigeration within said cold fluid chamber.

4,372,129
FAIL-SAFE REFRIGERATION FOR CONTINUOUS PROCESS
Benjamin R. Bennett, West Covina; Leroy D. McBee, Brea, and Richard F. Horak, Fullerton, all of Calif., assignors to Moore & Hanks Co., South El Monte, Calif.
Filed May 19, 1981, Ser. No. 265,183
Int. Cl.³ F25B *7/00;* **F25D** *17/02*
U.S. Cl. 62—175 **8 Claims**

1. Fail-safe refrigeration for continuous processes and including in combination;
dual refrigeration means comprised of primary and secondary mechanical heat absorption systems and each operable independently of the other to absorb heat from a mass required to remain continuously refrigerated, each system being comprised of a compressor means, a condenser means, an expansion means and a power means to operate the same, whereby heat absorption is effected through the expansion of a compressed refrigerant fluid to chill said mass,
a reversible transfer valve means alternately applying the heat absorption effect of one of the heat absorption systems to said mass,

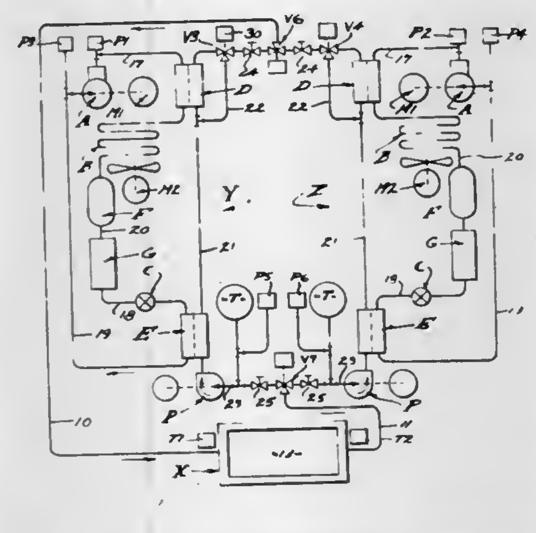

and failure responsive control means comprised of at least one condition responsive means in the dual refrigeration means and adapted to sense a malfunction thereof, and a double pole double throw relay that switches in response to the condition responsive means at one heat absorption system to alternately operate the power means of the primary and secondary heat absorption systems and to reverse the transfer valve means to reverse operation from one heat absorption system to the other.

4,372,130
CARBON DIOXIDE SNOW GENERATOR WITH PURGING MEANS
David J. Klee, Emmaus; Norris G. Lovette, Jr., Breinigsville; David R. Ruprecht, Laurys Station; John F. Boyle, Emmaus, and John C. Mullane, Jr., Allentown, all of Pa., assignors to Air Products and Chemicals, Inc., Allentown, Pa.
Filed Sep. 17, 1981, Ser. No. 303,279
Int. Cl.³ F25D *13/00*
U.S. Cl. 62—330 **9 Claims**

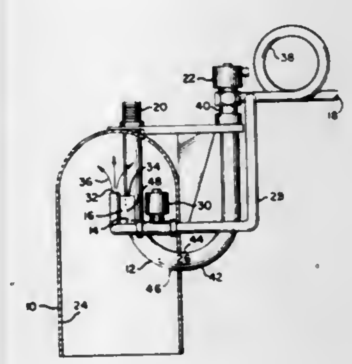

1. In an apparatus for depositing carbon dioxide snow on a product comprising: a reversing diffuser chamber having side walls, a closed upper end, and an open bottom; means for separating a two-phase flow of gaseous and solid carbon dioxide into separable high velocity streams of gaseous and solid carbon dioxide; and means for directing said high velocity stream of solid carbon dioxide upwardly into said reversing diffuser chamber whereby said stream is reversed, diffused and reduced in velocity to form a dispersed, downwardly flowing, low velocity stream of carbon dioxide snow, the improvement comprising a purge means which can controllably direct a high speed blast of a purge stream of pressurized fluid, at the inside surface of the reversing diffuser chamber to remove any residual carbon dioxide snow on said surfaces.

4,372,131
EARRING WITH LATCH MEMBER
Robert Musillo, 5481 Wolf Dr., Pittsburgh, Pa. 15236
Filed Jul. 17, 1981, Ser. No. 284,482
Int. Cl.³ A44C *7/00*
U.S. Cl. 63—12 **7 Claims**

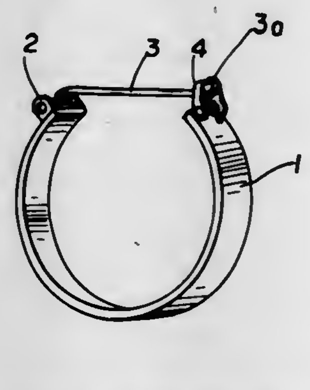

1. An earring for pierced ears, said earring comprising an arcuate ornamental portion of less than 360° having ends bridged by a post for piercing the ear, said post pivotally connected to one end of the arcuate portion, a latch member pivotally connected by pin means to the other end of the arcuate portion on the outer periphery thereof, spring means urging said latch member towards said one end of the arcuate portion and a hole formed in said latch member through which the free end of said post is adapted to extend so as to lock said post against pivotal movement and secure said earring on the ear of the wearer.

4,372,132
APPARATUS FOR FEEDING FILLING THREADS TO A WRAP KNITTING MACHINE
Rudolph G. Bassist, 1003 McGrann Blvd., Lancaster, Pa. 17601
Filed Dec. 8, 1980, Ser. No. 214,353
Int. Cl.³ D04B *27/10*
U.S. Cl. 66—84 A **11 Claims**

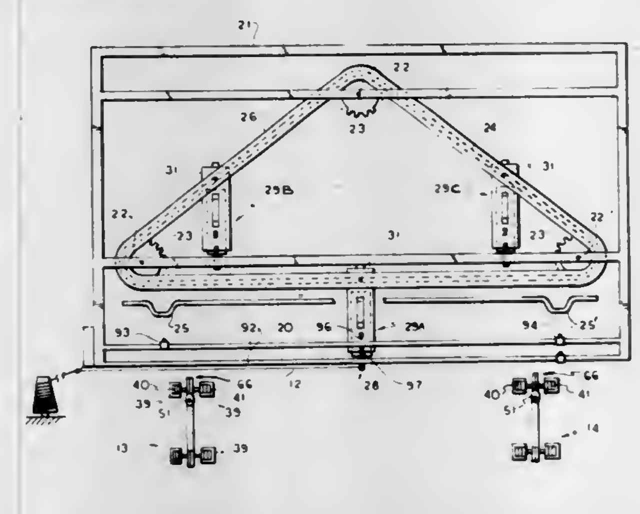

1. Apparatus for feeding filing threads to a warp knitting machine comprising:
first and second spaced apart conveyor means extending toward the knitting instrumentalities of the machine,
a plurality of thread clamping means carried by and movable with each of said conveyor means,
a plurality of filling thread supplies,
at least two guide means, each movable from the first conveyor means to the second conveyor means, for drawing filling threads from the thread supplies to positions adjacent to but spaced from the clamping means of both conveyor means, the two guide means being spaced apart in the direction of their movement,
each of the guide means including a carriage and a body carried by, and movable with respect to, the carriage, means mounted on the body for gripping the filing threads, and means for moving the body with respect to the carriage toward the conveyor means for inserting the filling threads into the clamping means of the conveyor means.

4,372,133
PUSHER NEEDLE
Jakob Müller, Stansstad, Switzerland, assignor to Textilma AG, Hergiswil, Switzerland
Filed Nov. 12, 1980, Ser. No. 206,291
Claims priority, application Switzerland, Nov. 29, 1979, 10618/79
Int. Cl.³ D04B *35/04*
U.S. Cl. 66—120 **4 Claims**

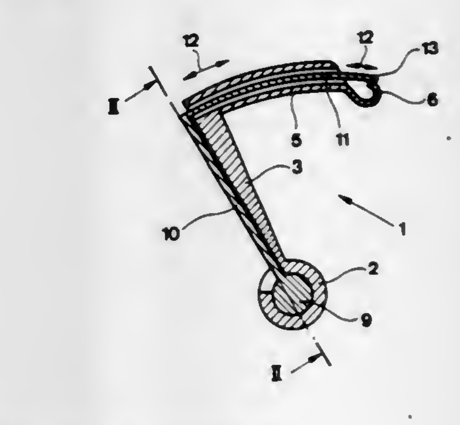

1. A pusher needle comprising:
a rotatable foot portion;
curved shaft portion is connected at right angles with a radially extending shaft portion and to said rotatable foot portion for accomplishing oscillating movements of said shaft portion;
said curved shaft portion having a head configured to form an open needle hook;
said curved shaft portion possessing a curved opening extending therethrough;
a curved pusher portion is connected with a radial pusher portion, said curved pusher portion is guided in said curved opening for carrying out a sliding movement between a forward position, in which the open needle hook is closed, and a retracted position where the open needle hook is open; and
said curved pusher portion being formed of spring steel and having a straight end covering said open needle hook in said forward position.

4,372,134
WASHING MACHINE
Katsuharu Matsuo, Aichi, Japan, assignor to Tokyo Shibaura Denki Kabushiki Kaisha, Kawasaki, Japan
Filed Jan. 30, 1981, Ser. No. 229,850
Claims priority, application Japan, Feb. 1, 1980, 55-11698; Feb. 4, 1980, 55-12232; Feb. 5, 1980, 55-13247[U]; Feb. 6, 1980, 55-13632[U]
Int. Cl.³ D06F *33/02*
U.S. Cl. 68—12 R **6 Claims**

1. A washing machine comprising:
a tub for receiving a laundry, detergent and water;
a pulsator provided at the bottom of said tub;
a detector disposed inside said tub for detecting air bubbles in the water and for producing a detection signal;
drive means for supplying a drive signal to said pulsator; and
control means connected to said detector and drive means for storing a reference signal which is produced from said

detector when said pulsator is not operated and for controlling said drive means according to the difference be-

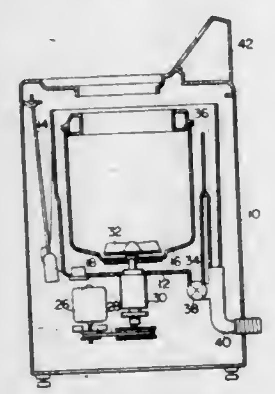

tween said reference signal and the detection signal during the operation of said pulsator.

4,372,135
HORIZONTAL WASHER APPARATUS
Klaus Heidan, Krefeld, Fed. Rep. of Germany, assignor to Greenville Steel Textile Machinery Corporation, Greenville, S.C.
Filed May 11, 1979, Ser. No. 38,411
Int. Cl.³ D06B *3/12*
U.S. Cl. 68—22 R 12 Claims

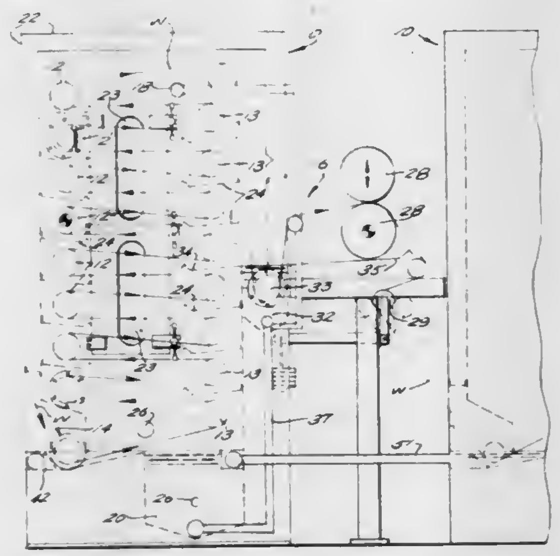

1. Apparatus for the continuous wet treatment of moving textile webs, including a chamber through which the web passes in serpentine fashion along substantially horizontal, vertically spaced, travel paths supported by a plurality of rollers rotatable about horizontal axes and disposed in two vertical columns, the rollers in each column being horizontally spaced from the rollers in the other column and vertically offset with respect thereto; an entry for the web at a lower portion on one side of said chamber; an exit for the web at the opposite side of said chamber; means for introducing treating liquid at the top of said chamber to pass downwardly in said chamber to treat the web at various horizontal travel paths;

and a liquid seal at said web exit comprising means for introducing treating liquid into said chamber at an intermediate portion of said chamber, vertically between said means for introducing treating liquid at the top of said chamber, and said web entry, so that liquid overflowing from said liquid seal provides treating liquid to said chamber at and below said web exit; said liquid seal having a redirecting roller provided therein;

said means for introducing treating liquid at an intermediate portion further comprising a trough disposed adjacent the top of said liquid seal and directing overflow from said liquid seal into the web at a horizontal travel path thereof.

4,372,136
LOCK PROTECTING HASP
Thorwald J. Mickelson, Excelsior, Minn., assignor to Transportation Security Inc., Eden Prarie, Minn.
Filed Aug. 27, 1980, Ser. No. 181,949
Int. Cl.³ E05B *73/00;* E05C *19/18*
U.S. Cl. 70—14 12 Claims

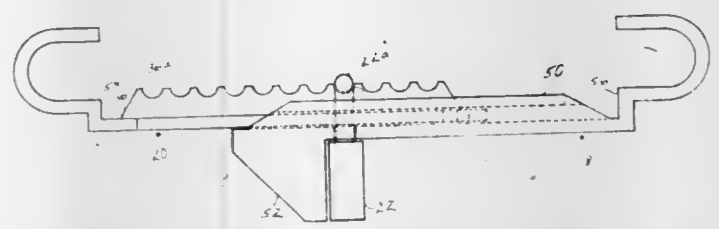

1. Lock-protecting hasp for use with opposing bars of full swing rear truck trailer doors, said lock-protecting hasp comprising:

opposing aligned male and female mating J-shaped members, each of said mating members including opposing holes, said female member including opposing channels on an inside leg of said J member for accepting said male member and a protector block on an outside leg of said J member, adjacent said opposing holes, said male member including opposing longitudinal slots in a leg of said male member and a longitudinal ribbed locking bar on an inside of said leg between said longitudinal slots whereby a shackle of a lock connects through each of said aligned holes of said mated members and said shackle engages between two of said ribs when said members are adjusted together about bars of said trailer doors and said protector block is adjacent said lock, thereby preventing any area or space exposed between said shackle and said lock body of said legs of said outside mounting hasps.

4,372,137
LOCK
Francisco E. Garcia, Madrid, Spain, assignor to Patentes FAC, S.A., Madrid, Spain
Continuation-in-part of Ser. No. 930,511, Aug. 3, 1978, Pat. No. 4,226,099. This application Jul. 22, 1980, Ser. No. 171,118
The portion of the term of this patent subsequent to Oct. 7, 1999, has been disclaimed.
Int. Cl.³ E05B *67/08*
U.S. Cl. 70—41 3 Claims

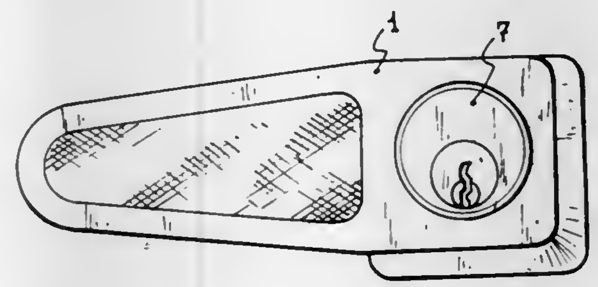

1. A lock comprising:

(a) a first element constituted by solid cast material and comprised of a flat elongated base with a first leg and a second leg extending perpendicularly from the ends of said base, the first of said legs defining a recess and a cavity therein, said recess being parallel to said flat elongated base;

(b) a second element mounted parallel to said flat elongated base of said first element and being rotatably mounted on said second leg such that the other end of said second element may be rotated into and out of the recess in said first leg of said first element, said second element having a

cavity therein, the cavity in said second element having a channel located in a wall thereof;

(c) a locking element movably disposed in the cavity of said first element and being movable into and out of engagement with the cavity of said second element, said locking element having a locking device disposed offset from the geometric center of said locking element, said locking device having a radial arm movable into and out of engagement with said channel in said cavity of said second element when said locking element is moved into engagement with said cavity of said second element.

4,372,138
PROTECTING DEVICE FOR PADLOCKS OR OTHER SIMILAR LOCKS
William E. De Forrest, 10432 Courson Dr., Stanton, Calif. 90680
Filed Oct. 1, 1980, Ser. No. 192,886
Int. Cl.³ E05B *67/38*
U.S. Cl. 70—56 2 Claims

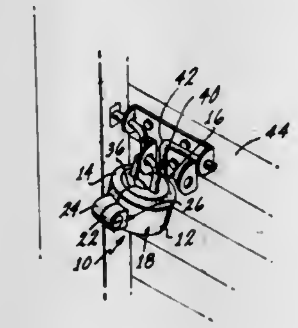

1. In a protection device of the type having first and second protector halves hingedly associated with each other, said first and said second halves joining together along a substantially planar junction, said halves when associated together along said planar junction substantially forming a hollow united body, said united body having a closed bottom wall and a substantially cylindrical circumferential wall, said body having a top wall, locking means adapted to releaseably secure said first and said second halves together maintaining said first and said second halves as a united body, said locking means including first and second lugs respectively secured to said first and said second halves on said circumferential wall the improvement which comprises:

said top wall including an essentially elongated opening opening into the hollow interior of said united body, said elongated opening formed in said first and said second halves such that a portion of said elongated opening is located in one of said first or said second halves and the remaining portion of said elongated opening is located in the other of said first or said second halves and together said portions form a singular opening in said top wall when said halves are associated together along said planar junction to form said united body;

said elongated opening sized and shaped to receive both sides of the shank of a lock of the type having a U-shaped shank the ends of which are received into a monolithic lock body, said lock body of the type which includes locking means incorporated into the lock body to reversibly release the ends of one of said shank sides;

the hollow interior of said body sized and shaped to contain at least said lock body within the interior of said body when the halves of said body are associated together along said planar junction forming said united body and when said lock body is contained within the interior of said body and said halves are associated together to form said united body said united body is capable of preventing access to said locking means of said lock body.

4,372,139
SELF-CONTAINED RE-KEYABLE LOCK
Dennis L. Laake, 619 Willow Hill Ct., Florence, Ky. 41042
Filed Oct. 20, 1980, Ser. No. 198,911
Int. Cl.³ E05B *25/00*
U.S. Cl. 70—383 17 Claims

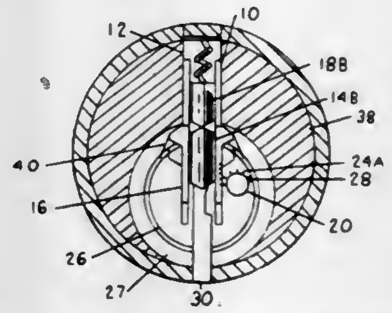

1. A pin tumbler locking mechanism comprising at least one key pin housed in the main cylinder that aligns with at least one pin tumbler located in the housing for said main cylinder wherein the improvement comprises a means to adjust the shear line, at the location of said key pin and said pin tumbler and between said main cylinder and said housing for said main cylinder, and a means to rotate said main cylinder after said means to adjust the shear line has been engaged.

4,372,140
DEVICE FOR SHOT-BLASTING HOLLOW PARTS OF LARGE DIMENSIONS
Bernard Sandillon, Maurepas, France, assignor to Lutelec Luchaire Equipement, Montreuil, France
Filed Jul. 8, 1980, Ser. No. 166,915
Claims priority, application France, Jul. 9, 1979, 79 17754
Int. Cl.³ B24C *1/10*
U.S. Cl. 72—53 10 Claims

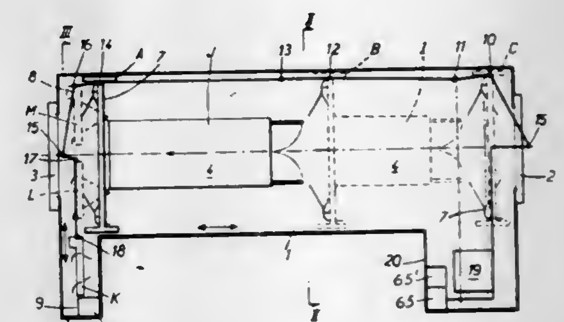

1. An installation for shot-blasting hollow parts of large dimensions, comprising:

a sealed enclosure,

displacement means for the hollow parts to be shot-blasted,

a plurality of blast pipes disposed in the enclosure,

a shot-blasting panel, movable in a direction perpendicular to the longitudinal axis of the enclosure and retractable in a lateral recess in the enclosure, said panel composed of at least one of said plurality of blast pipes,

a shot-blasting gantry, movable in the longitudinal axis of the enclosure, composed of at least one of said plurality of blast pipes,

means for switching over an air-shot mixture between at least the gantry and the panel, and

means for controlling the movement of the blast pipes composing the shot-blasting gantry.

4,372,141
WIRE COILING MACHINE
Frank S. Russell, Northboro, and Robert J. Simonelli, Grafton, both of Mass., assignors to Sleeper & Hartley Corp., Worcester, Mass.
Filed Oct. 27, 1980, Ser. No. 201,204
Int. Cl.³ B21F *3/02, 11/00*
U.S. Cl. 72—131 **21 Claims**

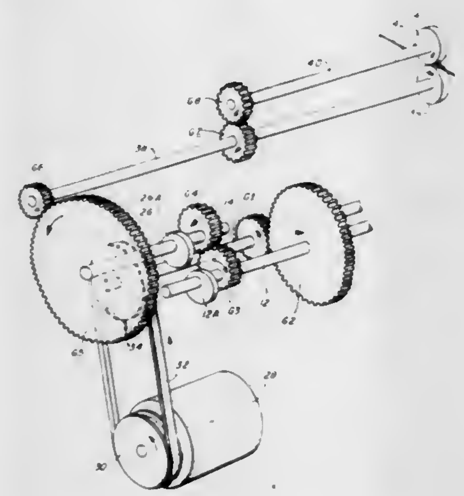

1. In a wire coiling machine having a work station at which a coil spring or the like is formed and a feed roller means through which the wire is fed, the improvement comprising;
 means for driving said feed roller means at a variable drive speed to, in turn, feed the wire at a variable speed to the work station,
 and means for controlling wire feed to intermittently interrupt wire feed in synchronism with the cutting of the wire subsequent to the coiling thereof,
 said means for driving comprising means for controlling the speed of wire feed to have a maximum speed feed while coiling and decreasing to a minimum speed feed in synchronism with the intermittent interruption of wire feed,
 said means for driving comprising a drive source and non-circular gear means coupled intermediate the drive source and feed roller means.

4,372,142
SHEET BENDING BRAKE
James J. Rhoades, Garden City, Mich., assignor to Tapco Products Company, Inc., Detroit, Mich.
Filed Nov. 28, 1980, Ser. No. 211,463
Int. Cl.³ B21D *5/04, 11/04*
U.S. Cl. 72—319 **12 Claims**

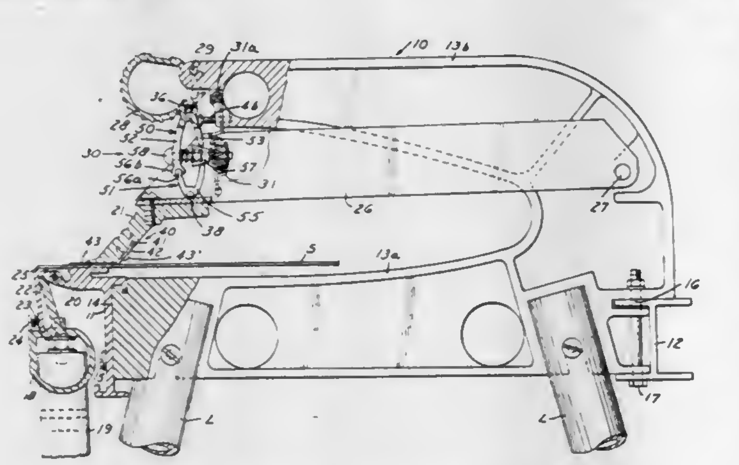

1. A sheet bending brake comprising
a frame having a fixed jaw and a movable jaw;
an anvil member secured to said fixed jaw;
said movable jaw having a clamping surface movable between workpiece clamping and non-clamping positions relative to the anvil member;
means for releasably locking the movable jaw in workpiece clamping position;
a bending member hingedly connected to the fixed jaw; and
a generally oval shaped spring device comprising generally U-shaped extruded upper and lower links, each link including a front wall and a rear wall connected to one another, each front and rear wall having a free end, the free ends of the front walls of said links extending toward one another and being pivoted to one another and the free ends of the rear walls of said links being spaced from one another, and means extending between at least one front wall and said rear walls for varying the spring force of said spring device, means pivoting the upper link of said spring device at the juncture of the front and rear wall thereof to said means releasably locking said jaw about an axis parallel to the axis about which the front walls are pivoted, means pivoting the lower link of said spring device at the juncture of the front and rear wall thereof to said movable jaw about an axis parallel to the axis about which the front walls are pivoted.

4,372,143
APPARATUS FOR FORMING A DOMED BOTTOM IN A CAN BODY
Karl Elert, Brookfield, and John C. Westphal, Franklin, both of Wis., assignors to Jos. Schlitz Brewing Company, Milwaukee, Wis.
Filed Oct. 10, 1980, Ser. No. 195,742
Int. Cl.³ B21D *22/24*
U.S. Cl. 72—343 **9 Claims**

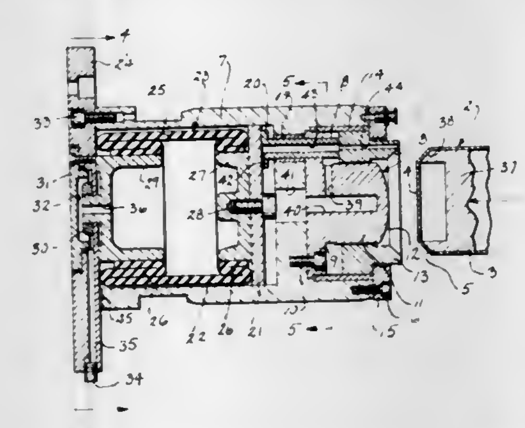

1. An apparatus for forming an inwardly extending dome in the bottom wall of a metallic one-piece can body having a beveled peripheral edge bordering the bottom wall, comprising, a die having an outer convex surface disposed to engage the bottom wall of the can body to form the dome therein, a pressure ring having an annular beveled surface and disposed radially outward of the die and mounted for sliding movement relative to said die, a pressure member spaced longitudinally from said die, a gas spring assembly including a single flexible bag interconnecting the pressure ring having an annular beveled surface and and the pressure member, said bag being disposed coaxially of said die, and an annular pressure transmitting member interconnecting said die and said pressure member, said pressure transmitting member disposed radially outward of said gas spring assembly and enclosing said bag, engagement of the beveled edge of said can body with the beveled surface on the pressure ring causing said pressure ring to move relative to said die against the pressure within said gas spring assembly to provide substantially uniform resistance throughout the stroke of movement of said pressure ring, and engagement of the bottom wall of the can body with said convex die surface serving to form the dome in said bottom wall.

4,372,144
WRAP RING ASSEMBLY FOR PRECISION NO-DRAFT FORGING
John J. Valentine, 1518 E. McWood St., West Covina, Calif. 91791, and Julius J. Fera, 17796 Fairview Dr., Fontana, Calif. 92335
Filed Apr. 27, 1981, Ser. No. 257,894
Int. Cl.³ B21D *22/00*
U.S. Cl. 72—352 **9 Claims**

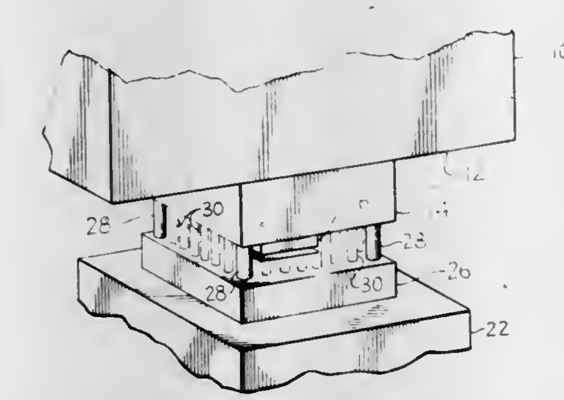

1. A wrap ring assembly for cooperation with an associated forging press which comprises:
 a punch having a first cavity;
 means for moving said punch up and down which includes a punch holder;
 a wrap ring having a bore therein;
 means for carrying said wrap ring on said punch holder which allows relative motion therebetween and which includes biasing means for urging said punch holder and said wrap ring apart; and
 a wrap die dimensioned for cooperation with said punch and having an exterior surface dimensioned for cooperation with said bore of said wrap ring.

4,372,145
CONDUIT BENDING APPARATUS
Anthony P. Giordano, 460 Mill Springs La., Plantation Acres, and Michael G. Mauer, Jr., 11780 Hermitage Dr., Plantation, both of Fla. 33325
Filed Mar. 30, 1981, Ser. No. 248,855
Int. Cl.³ B21D *9/05*
U.S. Cl. 72—387 **7 Claims**

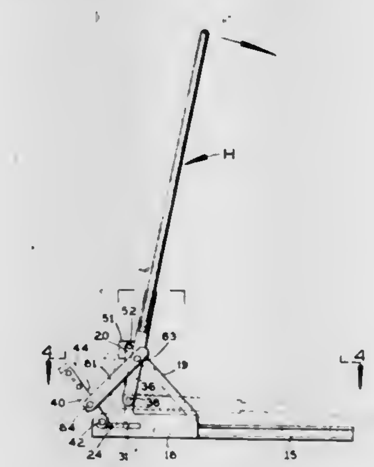

1. An apparatus for bending a plurality of closely spaced conduits extending up from a floor, said apparatus comprising:
 a base;
 means providing a lower abutment on one side of the conduits;
 means providing an upper abutment on said one side of the conduits spaced above and behind said lower abutment;
 a jaw mounted to be located on the opposite side of the conduits and movable between a retracted position away from said upper abutment and an extended position toward said upper abutment and above said lower abutment;
and means for moving said jaw from said retracted position to said extended position to form lower bends in the conduits against said lower abutment in one direction and to form upper bends in the conduits against said jaw in the opposite direction from said lower bends, whereby to offset the upper ends of the conduits substantially parallel to their lower ends at the floor;
said jaw having a width to receive all of said plurality of conduits simultaneously and a plurality of conduit-receiving grooves which are spaced apart laterally across said jaw to define the lateral spacing between the upper ends of said conduits above said upper bends therein;
means on said base for adjusting said lower abutment means toward or away from said jaw at the front of said upper abutment means so as to change the amount of the offset formed in the conduits by said lower and upper bends therein;
and means on said upper abutment means presenting a plurality of vertical grooves which are aligned respectively with said grooves in said jaw to further position the upper ends of said conduits.

4,372,146
PRESS MOTION DAMPENER
Donald E. Miller, Mt. Prospect, Ill., assignor to The Continental Group, Inc., Stamford, Conn.
Filed Nov. 12, 1980, Ser. No. 206,194
Int. Cl.³ B21D *22/10*
U.S. Cl. 72—453.13 **9 Claims**

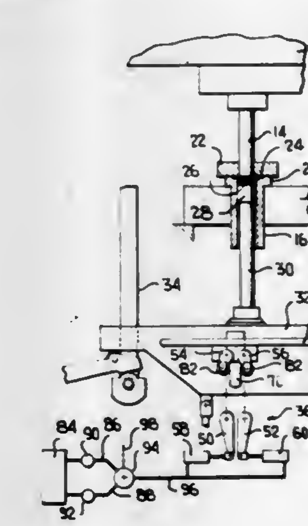

1. In a damper for dampening the travel of a moving member, said dampener comprising a pair of fluid motors having opposed operating elements, an actuating arm coupled to each of said operating elements, a reciprocating cam member operatively connected to said moving member, and means cooperative with said cam member for simultaneously moving said actuating arms in opposite directions against the resistance of said fluid motors, said cam member having remote oppositely facing surfaces including cam surfaces, and said means cooperative with said cam member being a pair of opposed cam followers engageable with said oppositely facing surfaces, said oppositely facing surfaces including cam follower engageable surfaces which are parallel and are after said cam surfaces in the direction of travel of said cam member.

4,372,147

FLOW METER PROVER APPARATUS AND METHOD

Charles C. Waugh, Tarzana, and Robert L. Wehrli, Malibu, both of Calif., assignors to Waugh Controls Corporation, Chatsworth, Calif.

Filed Mar. 17, 1981, Ser. No. 244,790

Int. Cl.³ G01F *25/00*

U.S. Cl. 73—3 **16 Claims**

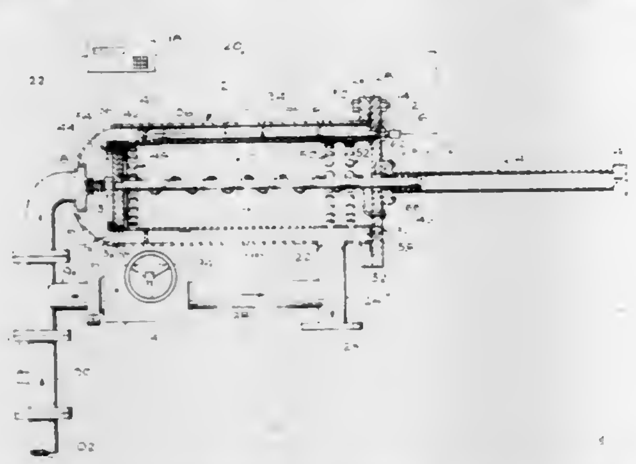

1. Apparatus for measuring a quantity of a flowing fluid, comprising:

an outer fluid housing having upstream and downstream ends, an inlet communicating with the upstream end and an outlet communicating with the downstream end;

a measuring conduit;

means for coaxially mounting the conduit within the outer housing, forming an annular cavity between the conduit and the housing;

a fluid barrier;

means for mounting the barrier within the annular cavity in a manner which divides the cavity into upstream and downstream sections;

a controllable piston slidably mounted within the conduit and having upstream and downstream sides;

an actuating rod axially projecting from the downstream side of the piston, where the free end of the rod extends through the downstream end of the outer housing;

first fluid bypass means connected between the inlet and outlet of the outer housing whereby the fluid can bypass the outer housing when the bypass is open;

first and second piston detection means;

means for positioning the first and second detection means in a spaced apart relationship where the distance between the first and the second detection means corresponds to the length of the fluid measuring portion of the conduit; and

second fluid bypass means including a first set of apertures provided in the conduit adjacent the upstream end thereof, and a second set of apertures provided in the conduit adjacent the downstream end thereof, whereby the fluid can bypass the piston when the piston is located at either the upstream or downstream limits of its travel within the conduit, and where the measuring portion of the conduit lies between the first and second sets of apertures; and where the means for coaxially mounting the conduit within the outer housing are located at positions of the conduit which exclude the fluid measuring portion of the conduit, so that the entire inner and outer surface of the fluid measuring portion of the conduit may be exposed to the fluid.

4,372,148

GENERATING APPARATUS FOR A VARIABLE FLUID PRESSURE

Bertrand G. Cleutat, 2 rue Marie Benaist, 75012 Paris, France

Filed Oct. 1, 1980, Ser. No. 192,939

Int. Cl.³ G01L *27/00*

U.S. Cl. 73—4 R **3 Claims**

1. Apparatus for generating a pulsating fluid pressure, the pulsation frequency itself being variable in a continuous manner, comprising:

a supporting structure; a conduit supported by said structure, with an ingress perforation for connecting a source of fluid under constant pressure thereto, an exit perforation continuously connected to said conduit where the pulsating fluid pressure exits, and an intermediate outlet

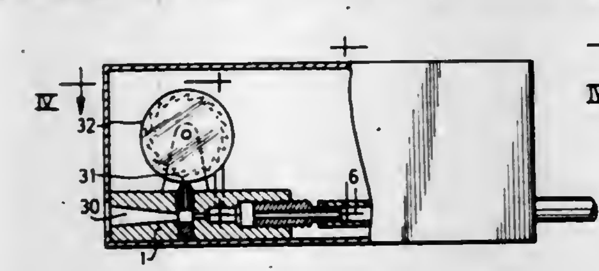

perforation in said conduit between said ingress and exit perforations,

a rotating cam with an inertia wheel, and means for launching rotation, and

movable means for at least partially closing the outlet perforation, operatively connected to said rotating cam in a manner so as to create at least an opening-closing cycle of said closing means at each turn of the cam.

4,372,149

LASER-EXCITED SPECTROPHONE

Vladimir P. Zharov, ulitsa Svobody, 48, korpus 1, kv. 8, Moscow, U.S.S.R.

Filed Nov. 17, 1980, Ser. No. 207,278

Int. Cl.³ G01N *21/00*

U.S. Cl. 73—24 **14 Claims**

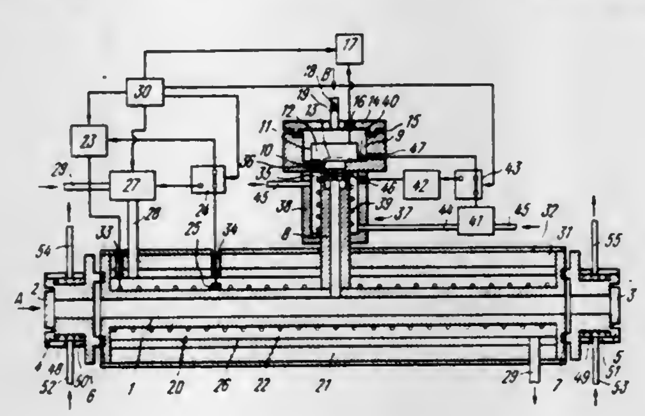

1. A laser-excited spectrophone comprising:

a working chamber whose cavity is formed with walls having inner and outer sides and also with first and second butt ends, said cavity being filled with a sample gas;

a first optical window in the first butt end of said chamber, laser radiation being transmitted to said chamber through said window;

a second optical window in the second butt end of said chamber, said window being used to remove said laser radiation from said chamber;

a conduit formed with walls having outer and inner sides, which is in communication with the cavity of said working chamber and has a length exceeding 8 to 10 times its cross-sectional diameter, while a volume thereof is at least 50 times smaller than the volume of said working chamber;

a condenser microphone mounted in said conduit; and

a first means for controlling temperature of said sample gas in said working chamber by its heating, said means incorporating an individual temperature control element encompassing said outer side of said walls of said chamber, a temperature transducer of said chamber arranged on said outer side of said wall of said chamber, and an individual thermoregulator having a first input and an output and connected via its input to said temperature transducer of said chamber and via its output to the temperature control element thereof.

4,372,150

FLOW MONITORING METHOD AND APPARATUS

Donald E. Stephens, Palo Alto, and Robert J. Ehret, Los Altos, both of Calif., assignors to Beckman Instruments, Inc., Fullerton, Calif.

Filed Jun. 5, 1980, Ser. No. 156,718

Int. Cl.³ G01M *3/28*

U.S. Cl. 73—40.5 R **5 Claims**

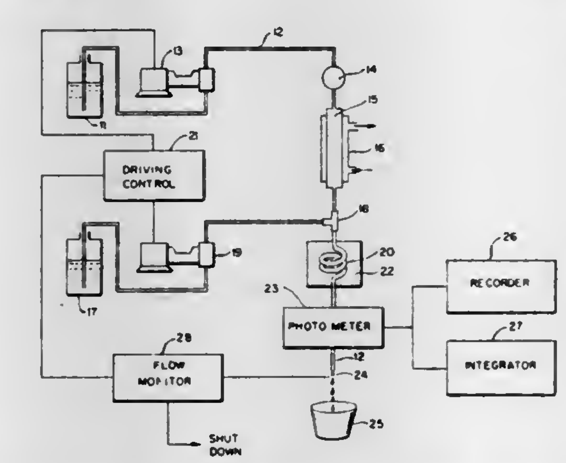

1. Apparatus employed with a liquid chromatograph instrument, said instrument including a chromatographic column, said device comprising:

means, associated with said column, for pumping a liquid;

a voltage controlled oscillator cooperative with said pumping means;

a drop detector associated with said chromatographic column;

means, adapted to receive a count signal from said voltage controlled oscillator and a clocking signal from said drop detector, for accumulating said count signal from said voltage controlled oscillator during a time determined by said clocking signal from said drop detector; and

means, responsive to said accumulating means, for comparing said accumulated counting signal with a preselected reference number.

4,372,151

AUTOMATIC FAULT LOCATING APPARATUS FOR A PRESSURIZED PIPELINE

Gennady A. Muraviev, Keskuse, 20, kv. 20, Tallin, and Lev B. Kublanovsky, Festivalnaya, 31, kv. 63, Moscow, both of U.S.S.R.

PCT No. PCT/SU80/00049, § 371 Date Nov. 13, 1980, § 102(e) Date Nov. 13, 1980, PCT Pub. No. WO80/01942, PCT Pub. Date Sep. 18, 1980

PCT Filed Mar. 13, 1980, Ser. No. 216,999

Claims priority, application U.S.S.R., Mar. 13, 1979, 2729652

Int. Cl.³ G01M *3/24*

U.S. Cl. 73—40.5 A **3 Claims**

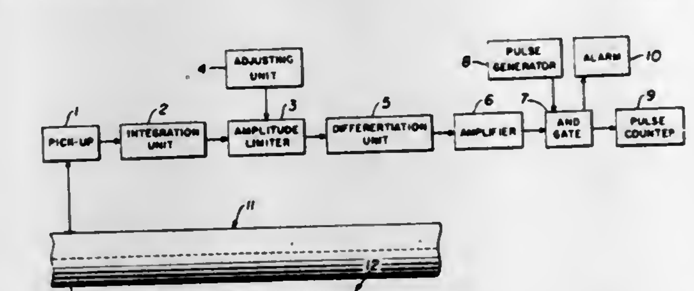

1. An automatic leak locating apparatus for a pressurized pipeline, comprising a pick-up for converting acoustic vibrations due to a leak into electrical signals and having an output electrically associated with an input of an amplifier having its output connected to one of the inputs of an AND gate, the AND gate having its other input connected to a pulse generator, whose frequency is equal to a proportionality factor K corresponding to the duration of a leading edge of a pressure drop level at a limit level and the distance covered thereby, a pulse counter to which an output of the AND gate is connected, characterized in that it further comprises an integration unit (2) to integrate said signals and having an input connected to an output of the pick-up to receive said signals (1), an amplitude limiter (3) having a signal input connected to receive an output of the integration unit (2), a limit level adjusting unit (4) whose output is connected to a control input of the amplitude limiter (3), a differentiation unit (5) having an input connected to receive an output of the amplitude limiter (3), and an output of said differentiation unit being connected as an input to the amplifier (6).

4,372,152

BRINELL HARDNESS MEASURING SYSTEM

Edwin B. Lewis, Evington, and Roy N. Moore, Jr., Concord, both of Va., assignors to The Mead Corporation, Dayton, Ohio

Filed Jan. 19, 1981, Ser. No. 226,301

Int. Cl.³ G01N *3/42, 21/01*

U.S. Cl. 73—81 **2 Claims**

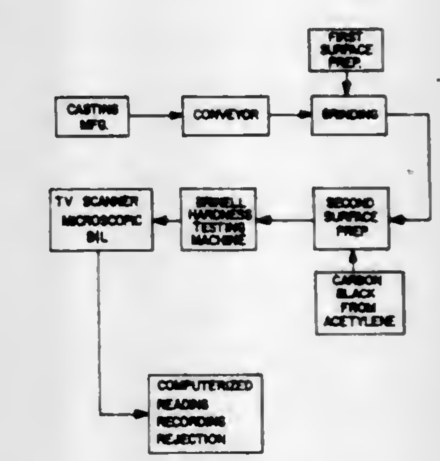

1. A process for automatically measuring the Brinell hardness of a casting for the purpose of creating data for use in making an accept/reject decision comprising the steps of:

(a) selecting at least one surface of a casting for hardness testing and positioning said casting on retaining means such that said surface is properly aligned for surface preparation steps and the use of Brinell hardness testing apparatus;

(b) subjecting said surface to a first surface preparation step, said first surface preparation step consisting of abrasive grinding or machining of at least a portion of the selected surface to remove irregularities in said surface;

(c) subjecting said surface to a second surface preparation step which comprises applying a contrast enhancing material to at least a portion of said selected surface of said casting, said contrast enhancing material being selected from the group consisting of flat black paint, glass frosting, colloidal graphite, carbon black and combinations of the above;

(d) testing the Brinell Hardness testing apparatus; and

(e) using the Brinell Hardness data to automatically effect an accept/reject decision and computing a Brinell number, as to the suitability of said casting for its intended use.

4,372,153

PIPE CLAMP AND A PROBING DEVICE COMPRISING A PIPE CLAMP

Adriaan B. Mann, Delft, Netherlands, assignor to Goudsche Machinefabriek B.V., Gouda, Netherlands

PCT No. PCT/NL80/00010, § 371 Date Dec. 3, 1980, § 102(e) Date Dec. 2, 1980, PCT Pub. No. WO80/02174, PCT Pub. Date Oct. 16, 1980

PCT Filed Apr. 3, 1980, Ser. No. 220,051

Claims priority, application Netherlands, Apr. 3, 1979, 7902608

Int. Cl.³ G01N *3/02*

U.S. Cl. 73—84 8 Claims

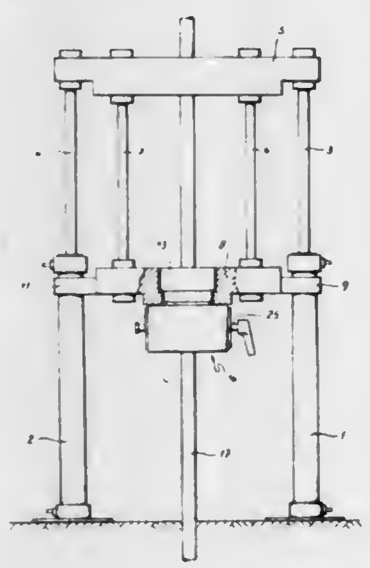

1. A pipe clamp comprising: a housing having a cylindrical inner wall and an opening for passing therethrough a pipe to be clamped, two guide blocks accommodated within said housing and each having a sliding surface running obliquely with respect to the axis of said opening, and two clamping blocks respectively capable of cooperating with the oblique sliding surfaces of said guide blocks, the axes of the cylindrical inner wall of the housing and of the opening being substantially perpendicular with respect to each other, and said two guide blocks being rotatable over 180° within said housing.

4,372,154

WIRE ELONGATION TEST METHOD AND APPARATUS

Lawrence W. Corbin, Fort Wayne, Ind., assignor to Fort Wayne Wire Die, Inc., Fort Wayne, Ind.

Filed May 22, 1981, Ser. No. 266,600

Int. Cl.³ G01N *19/00*

U.S. Cl. 73—104 12 Claims

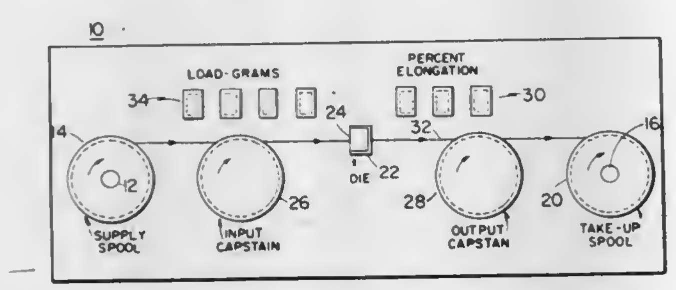

1. A digital method of testing a wire drawing die to determine the percent wire elongation provided thereby when the elongation is less than 100% comprising the steps of: pulling a predetermined test length of wire through the die and then around a rotatable capstan thereby rotating the same, generating a train of electrical pulses in response to rotational movement of said capstan, there being 10^n pulses generated in response to the rotational movement of said capstan caused by pulling a length of drawn wire therearound equal in length to said test length where "n" is a positive integer greater than zero and less than five; counting said pulses during the pulling of said test length of wire through the die; and providing a visual indication of the pulse count with the most significant digit eliminated.

4,372,155

METHODS OF MONITORING A COMBUSTION SYSTEM

James W. Butler, Dearborn Heights; Alex D. Colvin, Oak Park, and Dennis Schuetzle, West Bloomfield, all of Mich., assignors to Ford Motor Company, Dearborn, Mich.

Filed May 20, 1981, Ser. No. 265,316

Int. Cl.³ G01M *15/00*

U.S. Cl. 73—114 7 Claims

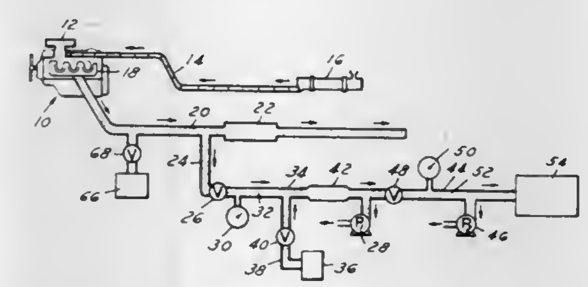

1. A method of obtaining on a continuous basis an instantaneous indication of the air to fuel ratio of an air/fuel mixture being fed to a combustion process, which method comprises the steps of:

continuously passing an air/fuel mixture through a combustion process to generate a first stream of gaseous material which may contain (a) unburned fuel, (b) partially oxidized fuel, (c) carbon monoxide, (d) carbon dioxide, (e) water vapor, (f) nitrogen, (g) oxygen, (h) inert gases normally found in air, or (i) a mixture of any or all of (a) through (h);

continuously withdrawing into a volume at a first pressure below atmospheric pressure a sample portion of said first stream of gaseous material, said first pressure below atmospheric pressure being a pressure that, at the temperature of said sample portion continuously withdrawn, said water vapor contained therein will not condense, said sample portion continuously withdrawn forming a second stream of gaseous material that has the same compositional makeup on a volume percentage basis as said first stream of gaseous material but at a reduced pressure;

continuously providing a controlled source of oxygen addition to said second stream of gaseous material;

continuously controlling said controlled source of oxygen addition by application of a control signal thereto in a manner that said oxygen is added to said second stream of gaseous material at a rate proportional to the strength of said control signal applied to said controlled source of oxygen addition;

continuously developing said control signal to a strength which results in said controlled source of oxygen addition adding to said second stream of gaseous material sufficient oxygen that there is after oxygen addition a predetermined amount of oxygen in excess of that required to stoichiometrically oxidize any (a) unburned fuel, (b) partially oxidized fuel, and (c) carbon monoxide to (d) carbon dioxide and (e) water vapor;

continuously withdrawing into a volume at a second pressure substantially below said first pressure a sample portion of said second stream of gaseous material after said oxygen has reacted with (a) unburned fuel, (b) partially oxidized fuel, and (c) carbon monoxide, said second pressure being a pressure that, at the temperature of said sample portion continuously withdrawn from said second stream of gaseous material, said water vapor contained therein will not condense, said sample portion continuously withdrawn forming a third stream of gaseous material that has the same composition makeup based on fully oxidized carbon and hydrogen on a molar basis as said second stream of gaseous material plus added oxygen but at a reduced pressure;

continuously subjecting said third stream of gaseous material to analysis by a mass spectrometer to generate on a continuous basis on output signal indicative of the ratio of oxygen to nitrogen in said third stream of gaseous material; and

continuously generating from said output signal generated by said mass spectrometer said control signal for application to said controlled source of oxygen, said control signal strength being generated in a manner that (1) when the oxygen signal of said third stream of gaseous material being measured by said mass spectrometer is at a predetermined level said control signal strength has a predetermined strength which ensures said predetermined amount of oxygen in excess of that required to stoichiometrically oxidize the aforementioned components is added to said second stream of gaseous material, and (2) when said oxygen signal of said third stream of gaseous material being measured by said mass spectrometer falls away from said predetermined level said control signal has a strength that ensures an amount of oxygen greater than said predetermined amount of oxygen is added to said second stream of gaseous material so that said measured amount of oxygen is returned to said predetermined level of oxygen, the instantaneous amount of oxygen being added to said second stream of gaseous material and the oxygen to nitrogen ratio being related to the fuel to air ratio of said air/fuel mixture being burned in the combustion process.

4,372,156

METHOD AND APPARATUS FOR DETERMINING CYLINDER LINER PROJECTION

Richard A. Meismer, Metamora, Ill., assignor to Caterpillar Tractor Co., Peoria, Ill.

Filed Feb. 17, 1981, Ser. No. 235,214

Int. Cl.³ G01M *15/00;* F02F *1/10;* B23P *19/02, 15/00*

U.S. Cl. 73—119 R 21 Claims

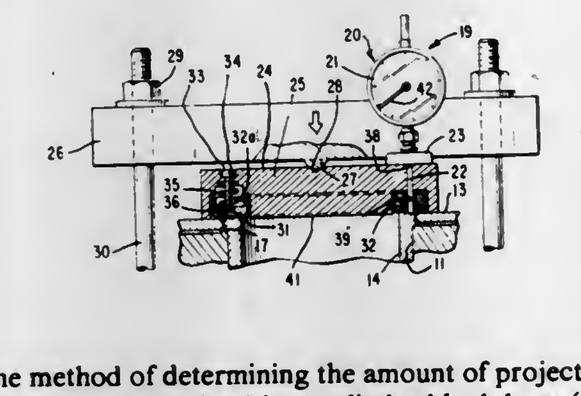

1. The method of determining the amount of projection of a cylinder liner (14) received in a cylinder block bore (11) of a cylinder block structure (10) and having an upper end (15) extending to above a top surface (13) of the cylinder block structure, said method comprising the steps of:

providing a pressure plate (25) having an accurately flat top surface (24) defining a reference plane;

positioning the pressure plate against said top surface (13) of the cylinder block structure;

urging the cylinder liner (14) fully about the circumferential extent thereof into fully inserted relationship in the cylinder block bore (11);

providing a gage indicator (20) having a base (23) and a probe (22) extending downwardly from said base;

positioning said indicator base (23) on said pressure plate top surface (24) to have the probe extend into engagement with said urged cylinder liner upper end (15) to provide a first reading from said reference plane; and

positioning the indicator base (23) on said pressure plate top surface (24) to have said probe extend into engagement with said top surface (13) of the cylinder block structure to provide a second reading from said reference plane which when compared with said first reading indicates the amount of projection of said upper end beyond said top surface of the cylinder block structure.

4,372,157

AERODYNAMIC DATA COLLECTION PROCEDURE

John E. Caruthers, Tullahoma, Tenn.; Robert L. Jay, Indianapolis, Ind.; Ronald E. Riffel, Indianapolis, Ind., and Mark D. Rothrock, Indianapolis, Ind., assignors to General Motors Corporation, Detroit, Mich.

Filed Apr. 7, 1981, Ser. No. 251,907

Int. Cl.³ G01M *9/00*

U.S. Cl. 73—147 3 Claims

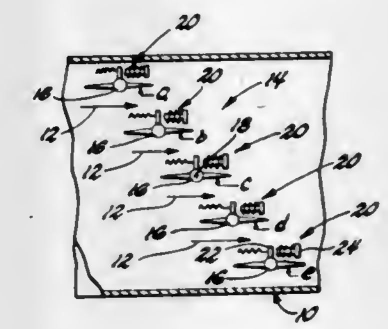

1. A procedure for collecting experimental data reflecting the behavior of a time varying aerodynamic parameter at an airfoil in a cascade of harmonically vibrating airfoils comprising the steps of placing said cascade of airfoils in a wind tunnel, subjecting said cascade to a continuous steady state fluid stream in said wind tunnel, vibrating a center airfoil of said cascade at a selected frequency and a selected amplitude while all of the other of said airfoils in said cascade are held rigid, measuring a time varying parameter at said center airfoil during vibration thereof, vibrating in turn and in said fluid stream each of said other airfoils at said selected frequency but at an arbitrarily selected amplitude which all of the remaining airfoils in said cascade including said center airfoil are held rigid, measuring said time varying parameter at said center airfoil during vibration of each individual one of said airfoils, and combining all of said time varying parameter measurements to reflect the behavior of said time varying parameter at said center airfoil when all of said airfoils in said cascade including said center airfoil are vibrated harmonically at said selected frequency and at the same amplitude.

4,372,158

AEROELASTIC INSTABILITY STOPPERS FOR WIND TUNNEL MODELS

Robert V. Doggett, Jr., Hampton, and Rodney H. Ricketts, Newport News, both of Va., assignors to The United States of America as represented by the Administrator of the National Aeronautics and Space Administration, Washington, D.C.

Filed Jun. 17, 1981, Ser. No. 274,705

Int. Cl.³ G01M *9/00*

U.S. Cl. 73—147 11 Claims

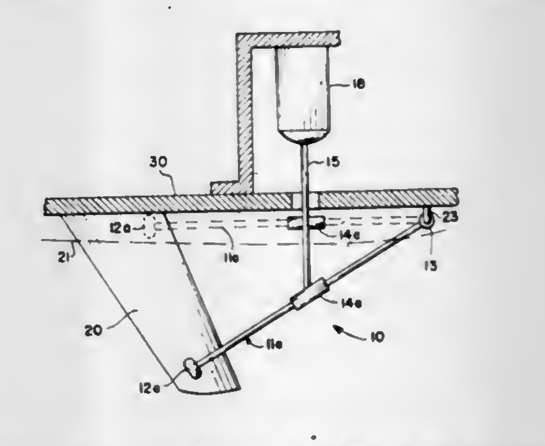

1. A device for constraining and forestalling destructive

aeroelastic vibrations in models being wind tunnel tested comprising:
a wind tunnel having walls forming a test section;
a model mounted in said wind tunnel test section;
restraining means;
said restraining means being connected to test section structure and being movable from a positon against a wall of the test section to a position engaging said model; and
actuation means for controllably deploying said restraining means when said model is subjected to excessive vibrations.

4,372,159
AEROELASTIC INSTABILITY STOPPERS FOR WIND TUNNEL MODELS
Robert V. Doggett, Jr., Hampton, and Rodney H. Ricketts, Newport News, both of Va., assignors to The United States of America as represented by the Administrator of the National Aeronautics and Space Administration, Washington, D.C.
Filed Jun. 17, 1981, Ser. No. 274,706
Int. Cl.³ G01M *9/00*
U.S. Cl. 73—147 12 Claims

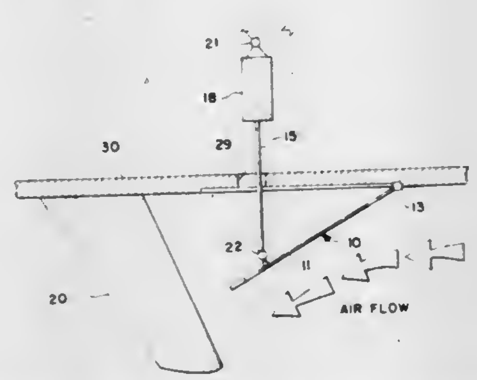

1. A device for diverting the flow over a model aircraft in a wind tunnel test comprising:
wind tunnel means having walls forming a test section;
plate means associated with a wall of the test section;
pivoting means for connecting said plate means to the wall of the wind tunnel; and
actuation means for controllably deploying said plate means into said test section to divert flow from a model being tested therein preventing instability of the model.

4,372,160
SPHERICAL INDICATORS FOR AIRCRAFT
Guy Gogniat, Linas, and Jacques Grobois, Palaiseau, both of France, assignors to Societe de Fabrication d'Instruments de Mesure (S.F.I.M.), France
Filed Nov. 13, 1980, Ser. No. 206,530
Claims priority, application France, Nov. 20, 1979, 79 28568
Int. Cl.³ G01C *21/00*
U.S. Cl. 73—178 R 8 Claims

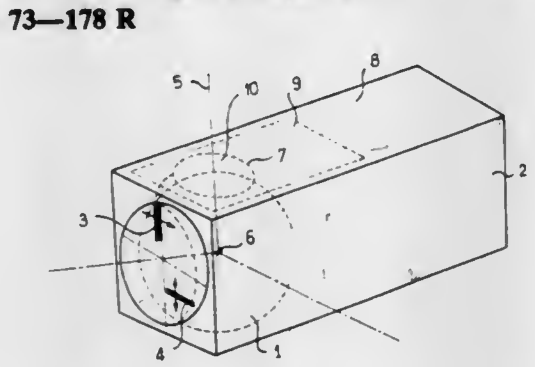

1. A spherical indicator for the position of an aircraft, comprising a pointer, a member supporting the pointer which member is mounted to rotate whereby the pointer can move in front of a sphere in order to illustrate a variation between the position of the aircraft and a guide line, said member being mounted to rotate about an axis which passes through the centre of the sphere, said member comprising a ring centered on an axis of the sphere, and said ring being located substantially in a plane tangential to the sphere.

4,372,161
PNEUMATICALLY OPERATED PIPE CRAWLER
Eric G. de Buda, 55 Humberview Rd., Toronto, Ontario, Canada (M6S 1W7); John R. Boon, 431 Satok Crescent, Milton, Ontario, Canada (L9T 3P2), and Michael P. Dolbey, 5 Glen Robert Dr., Toronto, Ontario, Canada (M4B 1J4)
Filed May 4, 1981, Ser. No. 260,012
Claims priority, application Canada, Feb. 25, 1981, 371711
Int. Cl.³ G01N *29/04*
U.S. Cl. 73—432 R 9 Claims

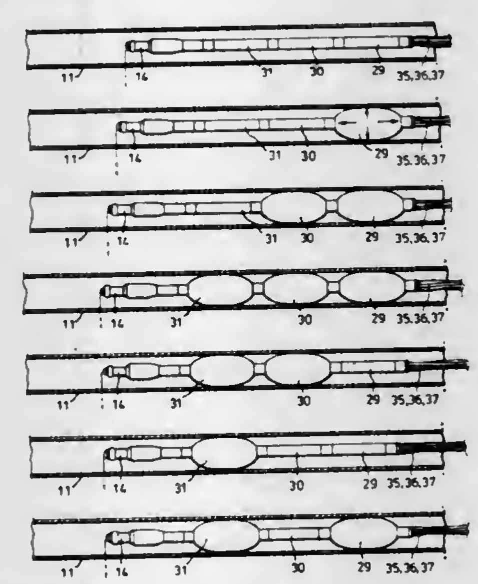

1. A pneumatically operated pipe crawler for transporting inspection equipment along the interior of a pipe, comprising:
an elongate cylindrical tube of flexible resilient material, the tube having a leading end and a trailing end,
support means extending from the leading end of the tube for supporting the inspection equipment ahead of the tube,
a plurality of longitudinally spaced partition members located within the tube, said members being hermetically sealed to the wall of the tube and defining therein first, second and third longitudinally separated chambers each having a radially and axially extensible wall portion,
first, second and third flexible gas supply tubes extending from the trailing end of the tube and communicating respectively with said chambers for inflating and deflating the chambers,
flexible electrical signalling means extending interiorly of the tube, said signalling means extending from the leading end of the tube for connection to the inspection equipment and extending from the trailing end of the tube for connection to a signal receiver,
said gas supply tubes and signalling means being hermetically sealed to the partition members through which they pass, and
means for supplying gas to said chambers and exhausting gas therefrom in repeated cyclic sequence for sequentially expanding said chamber wall portions into clamping relation with the pipe, each wall portion recovering to its original axial length upon deflation of the chamber, thereby to propel the tube step by step along the pipe.

4,372,162
THREE-AXIS ACCELEROMETER HAVING DYNAMIC BIAS COMPENSATION
Sidney G. Shutt, Brea, Calif., assignor to Rockwell International Corporation, El Segundo, Calif.
Filed Aug. 13, 1981, Ser. No. 292,545
Int. Cl.³ G01P *15/125*
U.S. Cl. 73—517 B 10 Claims

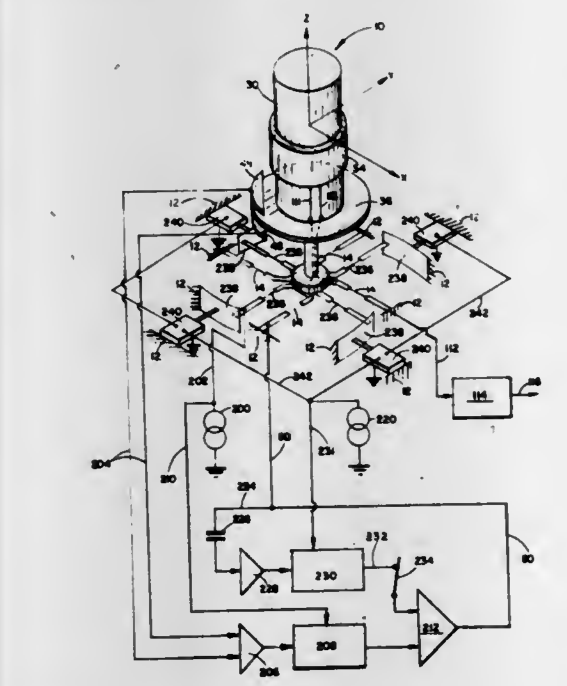

1. An accelerometer, comprising:
a base;
a proof mass;
primary control means for maintaining the position of said proof mass relative to said base, wherein said primary control means produces an output signal proportional to acceleration of said proof mass and base;
elastic suspension means for means for maintaining the position of said proof mass relative to said base;
means for producing a periodic variation of stress in said elastic suspension means and a corresponding periodic variation proportional to bias in said output signal; and
means for sensing said periodic variation proportional to bias and for using said periodic variation proportional to bias to provide dynamic bias compensation or calibration.

4,372,163
ACOUSTIC MEASUREMENT OF NEAR SURFACE PROPERTY GRADIENTS
Bernhard R. Tittmann; Lloyd A. Ahlberg, and Richard K. Elsley, all of Thousand Oaks, Calif., assignors to Rockwell International Corporation, El Segundo, Calif.
Filed Feb. 3, 1981, Ser. No. 231,061
Int. Cl.³ G01N *29/00*
U.S. Cl. 73—602 9 Claims

1. A method for determining the dispersion of a surface acoustic wave in an object, comprising the steps of:
generating a broadband acoustic wave in a surface of the object;
detecting the wave at a first location on the surface;
detecting the wave at a second location on the surface; and
calculating the velocity dispersion $v(f)=2\pi f a l/a\phi(f)$ where f is the frequency component of the wave, Δl is the distance between the first and second locations, and $\Delta\phi(f)$ is

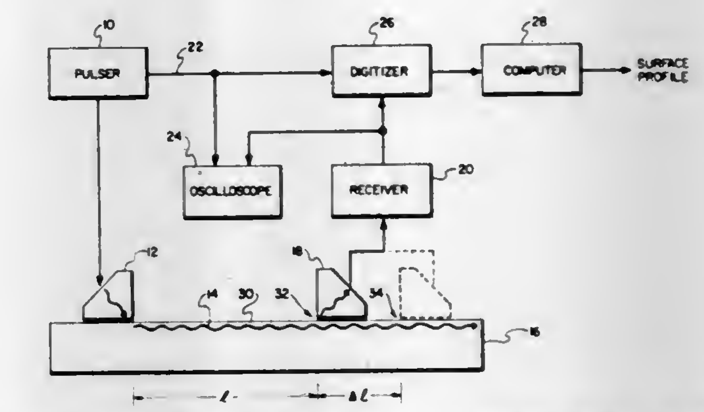

the change in phase of the frequency component f of the detected wave between the first and second locations.

4,372,164
INDUSTRIAL PROCESS CONTROL INSTRUMENT EMPLOYING A RESONANT SENSOR
Christopher R. Brown, and Everett O. Olsen, both of Wrentham, Mass., assignors to The Foxboro Company, Foxboro, Mass.
Filed Jun. 2, 1980, Ser. No. 155,325
Int. Cl.³ G01L *9/00*
U.S. Cl. 73—704 14 Claims

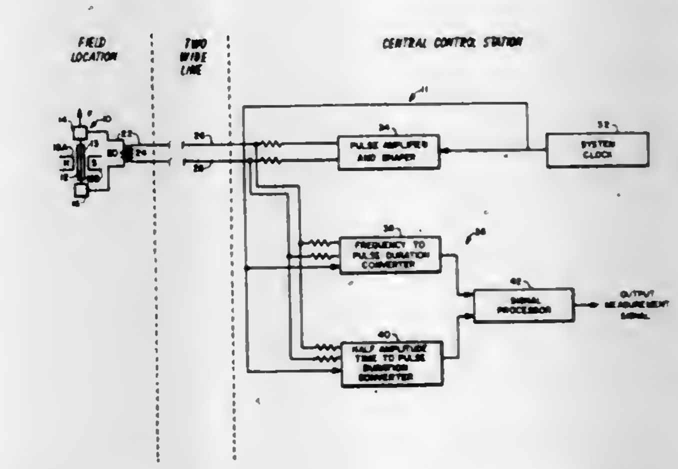

10. Industrial process instrument apparatus for developing at a central control station a signal responsive to the value of a process condition at a field measurement station remote from said central station, said process condition being represented at said measurement station by a differential pressure dependent upon the value of such condition;
said instrument comprising:
a vibrating wire located at said field measurement station said vibrating wire being surrounded by a liquid and having a resonant frequency and a damping factor, said resonant frequency and said damping factor both being dependent upon the differential pressure and the liquid temperature, said vibrating wire further capable of producing when excited a signal dependent upon both said resonant frequency and said damping factor, wherein when said vibrating wire is excited with a continuous wave of energy said signal has a frequency equal to said resonant frequency and a magnitude related to said damping factor;
a two-wire line for coupling said vibrating wire to said central control station;
said central control station including:
excitation means for supplying a continuous wave of energy to said vibrating wire;
first sensing means responsive to the frequency of said vibrating wire signal and for producing a signal dependent thereon;
second sensing means responsive to the magnitude of

said vibrating wire signal and for producing a signal dependent thereon;

said first sensing means signal and said second sensing means signal adapted to be combined in accordance with known physical principles to obtain an output measurement signal dependent only upon the value of said differential pressure and independent of the value of said temperature, whereby said output measurement signal is dependent only upon the value of said process condition.

4,372,165
APPARATUS FOR MEASURING FLUID FLOW
Gillies D. Pitt, Saffron Walden, and Roger J. Williamson, Harlow, both of England, assignors to ITT Industries, Inc., New York, N.Y.
Filed Sep. 10, 1980, Ser. No. 185,629
Claims priority, application United Kingdom, Sep. 11, 1979, 7931477
Int. Cl.^{3} G01F *1/32;* **G01N** *21/41*
U.S. Cl. 73—861.22 **4 Claims**

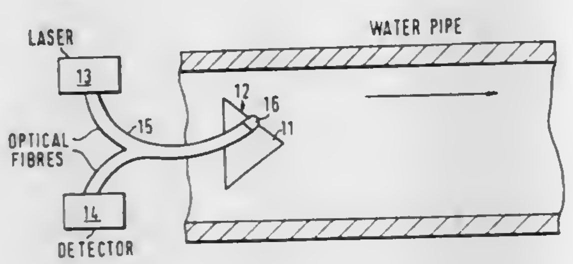

1. A fluid flowmeter of the type in which the flow velocity of a fluid is determined by measuring the frequency at which vortices are shed from a bluff body arranged in the fluid stream, comprising:
a prism mounted on said bluff body in the fluid stream;
a light source and means for directing light into said prism so as to provide an internally reflected beam;
means for measuring the intensity of said reflected beam; and
a frequency meter coupled to the output of said intensity measuring means to determine the rate of variation of said reflected beam intensity, said prism being constructed with respect to said light directing means so that the reflectivity of at least one surface of said prism varies in response to variations in the refractive index of the fluid caused by passing fluid vortices.

4,372,166
FLOWMETER SYSTEM WITH DIGITAL PHASE SHIFTER AND CALIBRATION
Robert S. Loveland, West Covina, Calif., assignor to The Perkin-Elmer Corporation, Norwalk, Conn.
Filed Jan. 13, 1981, Ser. No. 224,723
Int. Cl.^{3} G01F *1/66*
U.S. Cl. 73—861.28 **9 Claims**

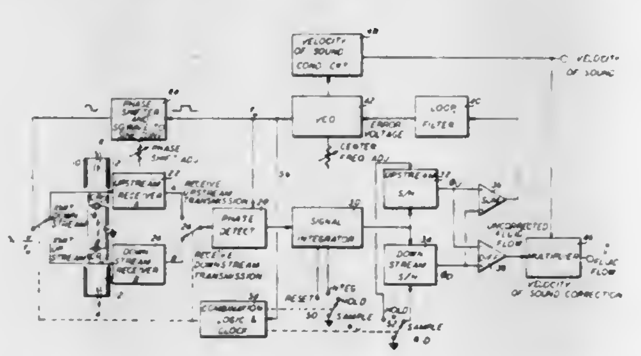

1. A flowmeter system comprising, in combination:
transducer means for transmitting acoustic compression waves upstream and downstream in a fluid flowing in a path in response to transmit signals;
circuit means for measuring the phase difference between the transducer means in the fluid flow path of the acoustic compression waves transmitted upstream and circuit means for measuring the phase difference between said transducer means in the fluid flow path of the acoustic compression waves transmitted downstream;
circuit means for producing a difference signal dependent on the difference between the two phase differences, the magnitude and sign of which being directly related to the instantaneous fluid flow rate and its direction;
circuit means for automatically adjusting the frequency of the acoustic compression waves to a frequency where a fixed wavelength distance, in the fluid flow medium, occurs across the path of the transducer means; and
digital means for generating calibration signals connected to said means for adjusting the frequency of the acoustic compression waves so as to simulate fluid flow in said path in response to signals from said transducer means and said means for adjusting the frequency of the acoustic compression waves for adjusting the phase of the transmit signals during initial calibration of the system to compensate for variations in transducer elements and to calibrate the system for use without the need of a flow in said path.

4,372,167
FLOWMETER SYSTEM WITH IMPROVED LOOP GAIN
Robert S. Loveland, West Covina, Calif., assignor to The Perkin-Elmer Corporation, Norwalk, Conn.
Filed Jan. 13, 1981, Ser. No. 224,724
Int. Cl.^{3} G01F *1/66*
U.S. Cl. 73—861.28 **10 Claims**

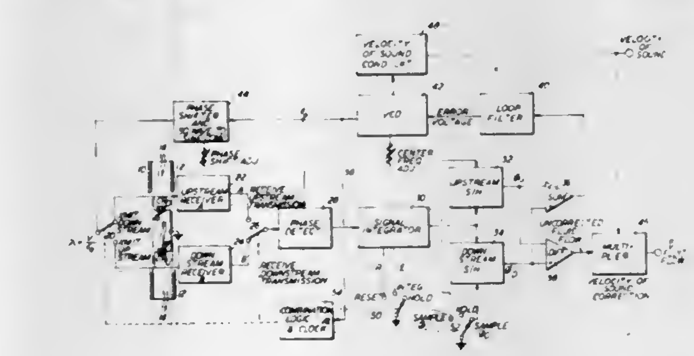

1. A flowmeter system of the phase lock loop type comprising, in combination:
transducer means for transmitting acoustic compression waves upstream and downstream in a fluid flowing in a path;
circuit means for measuring the phase difference between the transducer means in the fluid flow path of acoustic compression waves transmitted upstream and circuit means for measuring the phase difference between said transducer means in the fluid flow path of the acoustic compression waves transmitted downstream;
circuit means for producing a difference signal dependent on the difference between the two phase differences, the magnitude and sign of which being directly related to the instantaneous fluid flow rate and its direction;
circuit means for producing a sum signal representing the sum of the two phase differences;
circuit means for automatically adjusting the frequency of the acoustic compression waves to a frequency where a fixed wavelength distance, in the fluid flow medium, occurs across the path between the transducer means; and
active filter means connected between said summing means and automatic frequency adjusting means for filtering and increasing the amplitude of the sum signal so that relatively small difference signals produce large signals at said automatic frequency adjusting means to increase the loop gain of the system.

4,372,168
FLOWMETER
Christopher A. Watson, Upland, Calif., assignor to International Telephone and Telegraph Corporation, New York, N.Y.
Filed Jun. 8, 1981, Ser. No. 271,396
Int. Cl.^{3} G01F *1/66*
U.S. Cl. 73—861.28 **8 Claims**

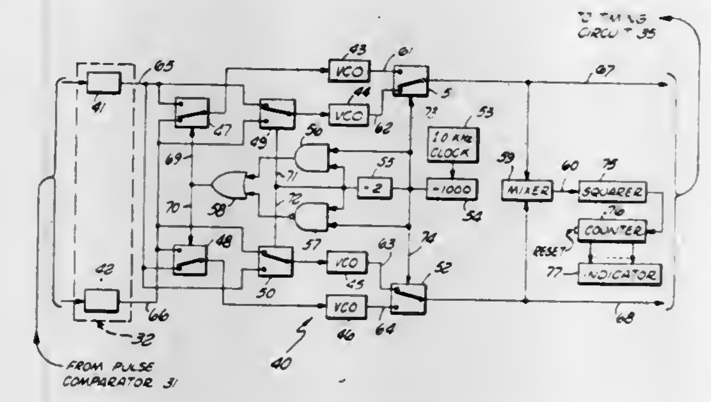

1. In an ultrasonic flowmeter, the combination comprising: a pipe section; a first transducer mounted in said pipe section to transmit and to receive vibrations along an axis; a second transducer mounted in said pipe section on said axis and spaced from said first transducer to transmit and to receive vibrational energy respectively transmitted to and from said first transducer; at least first and second voltage controlled oscillators having first and second output leads; means to cause said first and second voltage controlled oscillators to produce first and second output signals on said first and second output leads, respectively, of frequencies f_m and f_n, respectively, where

$$f_d = |f_m - f_n|$$

and f_d is proportional to the volume flow rate of a fluid flowing in said pipe section; difference means having first and second input leads; first switch means alternately connecting said first and second input leads from said first and second output leads, respectively, and vice versa, at a first rate to produce a third output signal of a frequency f_o, where $f_o = Kf_d$ and K is a constant, said difference means having a third output lead which carries said third output signal; utilization means connected from said third output leads; second switch means to energize said first and second transducers alternately at a second rate substantially higher than said first rate and synchronously with said first and second voltage controlled oscillators, respectively; and a charge storage circuit connected from respective ones of said second and first transducers, said charge storage circuit controlling the frequencies of said first and second voltage controlled oscillators.

4,372,169
VORTEX GENERATING MASS FLOWMETER
Nathaniel Hughes, Palm Springs, Calif., assignor to Vortech Sciences, Inc., Palm Springs, Calif.
Continuation-in-part of Ser. No. 40,557, May 21, 1979, Pat. No. 4,240,293, which is a continuation-in-part of Ser. No. 886,289, Mar. 13, 1978, Pat. No. 4,189,101, and Ser. No. 886,288, Mar. 13, 1978, Pat. No. 4,192,465, each is a continuation-in-part of Ser. No. 785,838, Apr. 8, 1977, Pat. No. 4,109,862. This application Jan. 7, 1980, Ser. No. 109,839
Int. Cl.^{3} G01F *1/32, 1/34*
U.S. Cl. 73—861.52 **16 Claims**

1. A vortex generating flowmeter comprising:
a first port;
a second port;
a flow measurement passage between the first and the second ports;
a restriction formed in the flow passage between the first and second ports;
bluff body means producing drag in the passage between the restriction and the second port; and

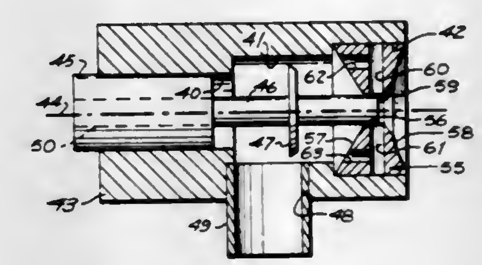

means for sensing gas pressure in the vicinity of the bluff body means between the restriction and the second port.

4,372,170
FLOW MEASURING APPARATUS
Mary L. Dehart, Mesquite; M. Leon Kloostra, Rowlett, and Harold E. Straub, Garland, all of Tex., assignors to Environmental Elements Corp., Baltimore, Md.
Filed Nov. 7, 1977, Ser. No. 849,403
Int. Cl.^{3} G01F *1/42;* **G01F** *1/46*
U.S. Cl. 73—861.61 **2 Claims**

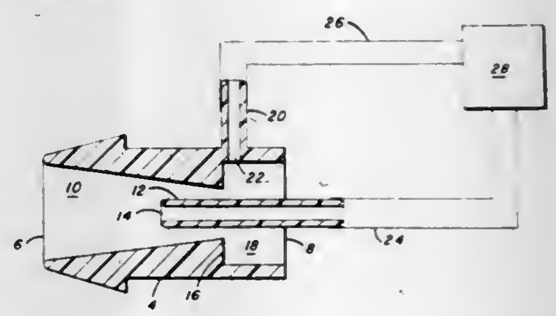

1. A gas flow sensing device comprising a tube having an upstream end and a downstream end, the orifice in the upstream end being tapered to form a tapered orifice section, an abrupt expansion of the orifice to form an expansion chamber in the downstream end, a total pressure probe located in the tapered orifice section and having its opening parallel to the flow of gas and facing upstream, a static pressure probe located in the expansion chamber at the abrupt expansion of the orifice and having its opening perpendicular to the flow of gas, means for connecting the total pressure probe and static pressure probe to a visual readout means or a control means.

4,372,171
NOZZLE PITOT AVERAGING PRIMARY
Robert O. Brandt, Jr., Garner, N.C., assignor to Brandt Industries, Inc., Fuquay-Varina, N.C.
Filed Oct. 14, 1980, Ser. No. 196,184
Int. Cl.^{3} G01F *1/46*
U.S. Cl. 73—861.66 **14 Claims**

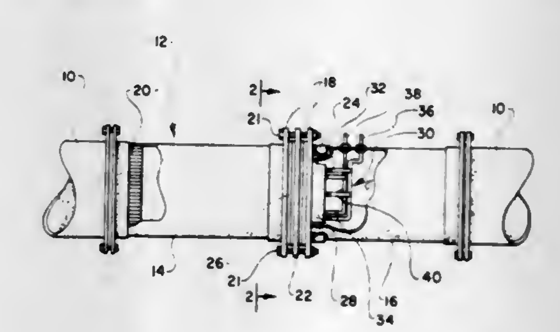

1. A nozzle pitot primary device for measuring air or gas flow within a system of air or gas fluid moving within a conduit comprising: fluid constricting means in the form of a nozzle having a longitudinal axis and an external wall that

defines a fluid flow opening therein for allowing a fluid such as air or gas to pass therethrough and further including an inlet end and an exiting end and wherein the external wall of said nozzle is flared inwardly from said inlet end towards said exiting end such that fluid is constricted as it passes therethrough, said nozzle being adapted to be positioned with respect to said conduit such that fluid passing through said conduit is constrained to move through said nozzle; pitot means operatively associated with said nozzle and positioned in the path of the fluid passing therethrough for effectively sensing the differential velocity pressure of the fluid passing through said nozzle, said pitot means including an array of averaging static and total pressure pitots disposed in a loop type configuration about said nozzle with pitots of said array having sensing ends that generally lie in a transverse plane inwardly of the external wall of said nozzle; said total pressure pitots including a plurality of openings spaced and disposed along the loop configuration with the openings being oriented to face the flow within said nozzle; said static pitots including a plurality of openings spaced and disposed along said loop configuration but which are oriented such that they face a direction generally perpendicular to the direction of flow within said nozzle; said loop configuration extending around the central axis of said nozzle and spaced inwardly of the adjacent external wall structure and wherein openings of both said static and total pressure pitots lie along the same loop configuration; and wherein said nozzle is shaped to provide flow constricting means for directing the system of fluid therethrough in such a manner that the resulting velocity profile of the moving fluid is relatively uniform across a substantial portion of the cross sectional area of the fluid flow opening within said nozzle, thereby enabling a relatively accurate determination of fluid flow to be made.

4,372,172

PROCESS FOR MEASURING THE TIGHTNESS OF ENDLESS DRIVING MEANS DURING OPERATION

Karoly Gombocz; Jozsef Korbuly; Geza Krampe; Jozsef Szatmari, all of Budapest, and Karoly Szöke, Kerepestarcsa, all of Hungary, assignors to Kozponti Banyaszati Fejlesztesi Intezet, Budapest, Hungary

Filed Oct. 4, 1980, Ser. No. 204,081

Int. Cl.³ G01L *5/10*

U.S. Cl. 73—862.39 **2 Claims**

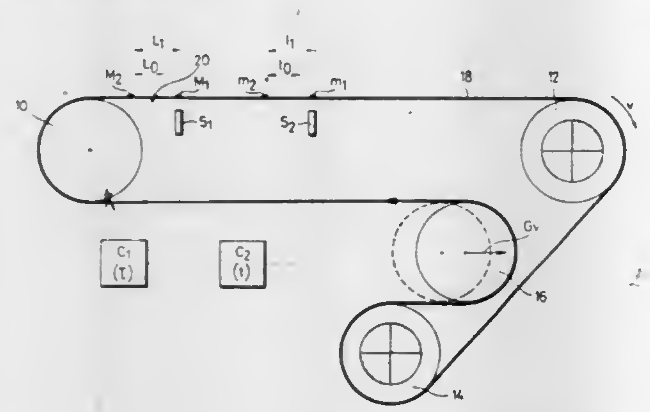

1. A method of monitoring ageing or wearing condition of a spliced endless driving means, which method comprises applying to a spliced endless driving means a pair of first markings (M_1, M_2) the shortest path between which includes the splice of the endless drive means, applying to said driving means a pair of second markings (m_1, m_2) the shortest path between which does not include said splice, measuring substantially simultaneously during use of the driving means:

(1) the time taken for said first pair of markings to pass through a position in which they are sensed by a first element (S_1) for sensing the presence of said first markings; and

(2) the time taken for said second pair of markings to pass through a position in which they are sensed by a second element (S_2) for sensing the presence of said second markings;

thereafter determining the relation between times (1) and (2) and comparing the relation thus obtained with a permitted relation value.

4,372,173

RESONATOR FORCE TRANSDUCER

Errol P. EerNisse, Sandy, Utah, and Jerome M. Paros, Redmond, Wash., assignors to Quartex, Inc., Salt Lake City, Utah

Filed Oct. 20, 1980, Ser. No. 198,705

Int. Cl.³ G01L *1/10*

U.S. Cl. 73—862.59 **22 Claims**

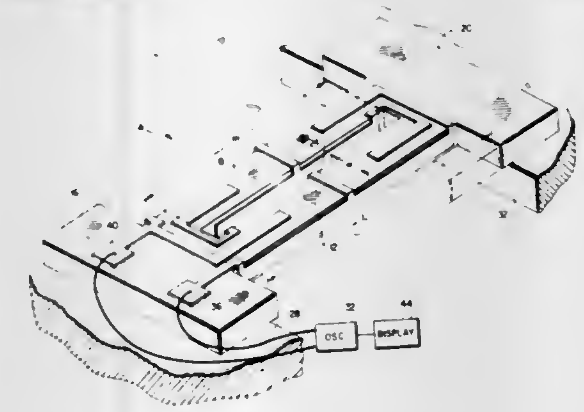

1. A vibratory force transducer comprising

a pair of elongate, generally parallel bars coupled together at their ends and adapted to vibrate 180° out of phase in a transverse direction, said bars each having a thickness t, and a width w, the distance between the locations at which the bar ends are coupled together being m and the lengths of the bars being generally L, wherein

$0.4<t/w<4$, and

$L/m\geq 1$,

means for causing said bars to resonate at a frequency f in substantially 180° phase opposition in a transverse direction, said frequency varying with variation in force applied longitudinally to said bars.

4,372,174

METHOD AND APPARATUS FOR SAMPLING A CORE OF TAR SAND

Lubomyr M. Cymbalisty; Alvin J. Maskwa; Lloyd W. Trevoy, and Jan Wojno, all of Edmonton, Canada, assignors to Petro-Canada Exploration Inc., Calgary; Her Majesty the Queen in right of the Province of Alberta, Government of the Province of Alberta, Department of Energy and Natural Resources, Alberta Syncrude Equity, Edmonton; PanCanadian Petroleum Limited, Calgary; Esso Resources Canada Ltd., Calgary; Canada-Cities Service, Ltd., Calgary; Gulf Canada Limited, Calgary; Alberta Energy Company Ltd., Calgary; Hudson's Bay Oil and Gas Company Limited, Calgary and Petrofina Canada Inc., Calgary, all of, Canada

Filed May 4, 1981, Ser. No. 260,365

Int. Cl.³ G01N *1/04*

U.S. Cl. 73—863.11 **3 Claims**

1. A method for sampling a frozen core of tar sand which comprises:

cutting the core transversely to form a pair of slabs, each having a flat face and a curved face;

sawing a pair of angularly directed cuts into the central portion of such a slab along at least part of its length to form a longitudinal sample portion having a generally triangular cross-section of substantially constant area;

recovering the sample portion; and

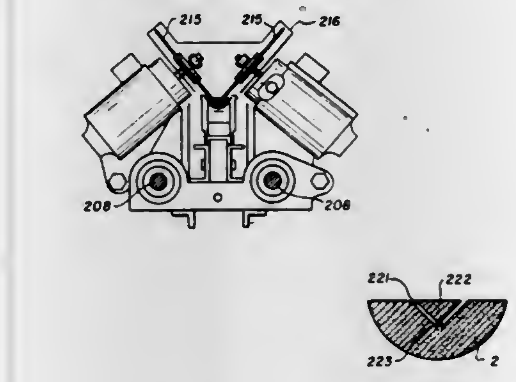

grinding at least part of the still frozen sample portion to form a generally homogeneous sample.

4,372,175

AUTOMATIC PIPETTOR EMPLOYING AN ADJUSTABLE VOLUME DELIVERY PUMP

Bernard Parker, Westport, Conn., assignor to Baker Instruments Corp., Bethlehem, Pa.

Filed Dec. 29, 1980, Ser. No. 221,152

Int. Cl.³ B01L *3/02*

U.S. Cl. 73—864.17 **6 Claims**

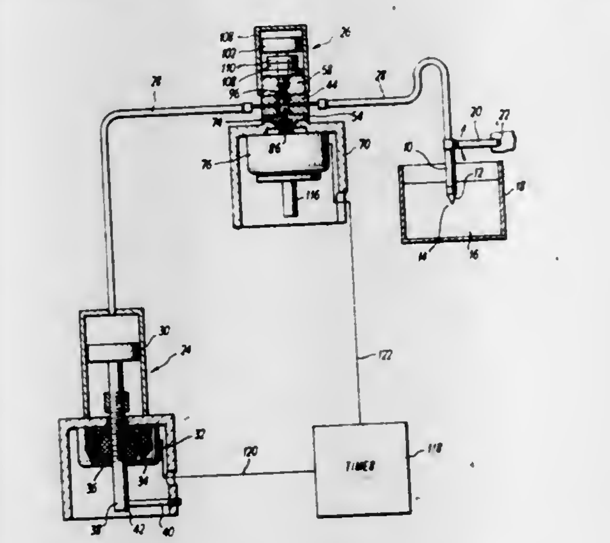

1. Pipettor apparatus for dispensing accurate and precise amounts of a liquid medium which comprises, in combination:

(a) a nozzle having a tip equipped with an orifice for dispensing a liquid;

(b) a first fixed volume pump having a capacity sufficient to handle substantially all of the liquid to be dispensed;

(c) a second variable volume delivery pump having a capacity which is only a fraction of the capacity of said first pump and said second pump adapted to add or subtract liquid;

(d) said first pump being connected to the nozzle through means of a liquid passageway and said second pump being connected into the same liquid passageway in series between said first pump and said nozzle;

(e) said first and second pumps each including a two-stroke piston driven by an electrically activated device; and

(f) electrical circuit means including a timer for activating said device whereby said first pump draws a specified amount of liquid to be dispensed through said orifice and then expels this liquid through said orifice while at the same time said second pump adds or subtracts a small amount of liquid to accurately deliver the total amount of liquid desired.

4,372,176

TAPERED TOOTH HELICAL GEAR DRIVE TRAIN FOR ELIMINATING THE NEED FOR END THRUST BEARINGS

Clegia L. Terry, 2116 Curving Rd., Knoxville, Tenn. 37912

Filed Sep. 22, 1980, Ser. No. 189,183

Int. Cl.³ F16H *55/18*

U.S. Cl. 74—409 **10 Claims**

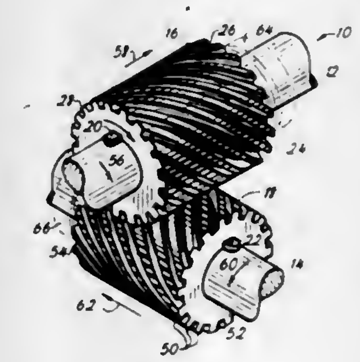

2. A gear drive combination of two gears with helically cut teeth for use with parallel drive shafts wherein axial thrust is contained by the thrust-resistive interfacing of said gears, comprising:

a first support shaft rotatably driven in a direction;

a first gear with helically cut teeth non-rotatably mounted on said first support shaft, said teeth having a constant tooth profile end to end and a uniformly tapered top land and bottom land, said tapered land occuring the length of each tooth, with the bottom land increasing in width as the top land is decreasing in width;

a second gear with helically cut teeth which spiral in the opposite direction from said first gear, the teeth of said second gear having the same constant tooth profile as said teeth of said first gear with similar but oppositely directed uniformly tapered top lands and bottom land, and which second gear teeth drivingly interface with said teeth of said first gear without backlash;

a second support shaft on which is non-rotatably mounted said second gear so that rotation of said second gear results in the rotation of said second shaft, and whereby said second gear is held in driving proximity to said first gear with a pitch diameter of one gear concurrent with the pitch diameter of the other gear along a single straight line, and with the longitudinal axis of said second shaft parallel to the longitudinal axis of said first shaft; and

wherein said top lands of said teeth of said first and second gears decrease in the direction of axial thrust produced by the driving of said second gear by said first gear.

4,372,177

REAR-VIEW MIRROR CONTROL ACTUATOR

Toru Yamana, Fujieda, Japan, assignor to Murakami Kaimeido Co., Ltd., Japan

Continuation of Ser. No. 32,643, Apr. 23, 1979, abandoned, which is a continuation of Ser. No. 866,510, Jan. 3, 1978, abandoned, which is a continuation of Ser. No. 730,001, Oct. 6, 1976, abandoned. This application Jan. 30, 1981, Ser. No. 288,301

Claims priority, application Japan, May 19, 1976, 51-56665

Int. Cl.³ F16C *1/10*

U.S. Cl. 74—501 M **2 Claims**

1. A remote control actuator for actuating a remotely controlled device in universal pivotal movement comprising, a casing mounted in use in a fixed position and having a fixed pivot, a control element extending into and out of said casing, a spider fixed to said control element for pivotal universal movement about said fixed pivot under the control of said control element, three flexible wires connected to said spider at three equally angularly spaced points about 120 degrees apart and having end portions connected in use to a remotely con-

trolled device to be controlled in universal pivotal movement, a guide pin fixed to said casing coaxially with said control element and said spider and extending axially away from said spider, a tensioning member for tensioning the three flexible wires jointly and continuously, said tensioning member being disposed circumferentially about said guide pin and axially slidable relative to said guide pin, said tensioning member having thereon three circumferentially spaced L-shaped, lateral projections each having a leg extending in a direction about 90° away from the axis of the guide pin defining respective channels through which respective ones of the wires extend at about 90° to the axis of the guide pin and are bent each along an L-shaped length intermediate the points of connection to the spider and lengths thereof extending outwardly of said casing, said projections underlying the bend of the bent portions and lengths thereof substantially normal to said axis and being disposed substantially aligned with respective points at the spider and axially spaced therefrom, said tensioning

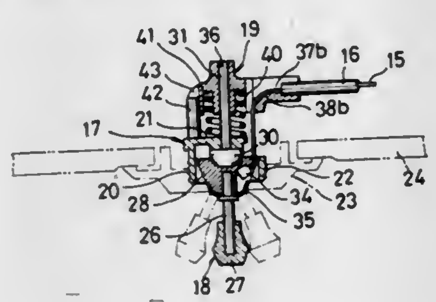

member having a guide recess, a retainer pin fixed to said casing and extending substantially parallel to said guide pin into said guide recess for maintaining the tensioning element from rotating about said guide pin, a spring constantly biasing said tensioning element in a direction away from said spider element effective to cause said projections underlying the wires to continuously apply tensioning forces to the respective wires to tension said wires, the three points of connection of said wires to said spider being disposed to correspond to points each at a corresponding vertex of a respective angle of an equilateral triangle having a center coaxial with said control element and said guide pin, and said wires being connectable in use to the controlled device at points each corresponding to a respective vertex of a corresponding angle of an equilateral triangle having a center corresponding to the center of the remotely controlled device and having equilateral sides corresponding to equilateral sides of an equilateral triangle defined by said spaced points of connection of said wires to said spider and equal thereto.

4,372,178
OPERATING FORCE TRANSMITTING APPARATUS
Shingo Ota, Komatsu, Japan, assignor to Kabushiki Kaisha Komatsu Seisakusho, Tokyo, Japan
Filed Feb. 28, 1980, Ser. No. 125,588
Int. Cl.³ G05G *1/14*
U.S. Cl. 74—512 **1 Claim**

1. An operating force transmitting apparatus to be used for brake or clutch operation of a vehicle, comprising:
a frame of the vehicle;
a pair of brackets fixedly secured to said frame;
first shaft means mounted on said pair of brackets astride thereto;
first cylinder means rotatably mounted on said first shaft means, said first cylinder means having an operating member and a lever fixedly secured thereto;
cam follower means mounted for rotation on said lever;
second shaft means mounted on said pair of brackets astride thereto;
second cylinder means rotatably mounted on said second shaft means;
cam link means fixedly secured to said second cylinder means;
spring means connected to said frame and said cam link means for urging said cam link means to always contact with said cam follower means in such a manner that the contact point of said cam link means and said cam follower means is continuously varied as said operating member is moved;

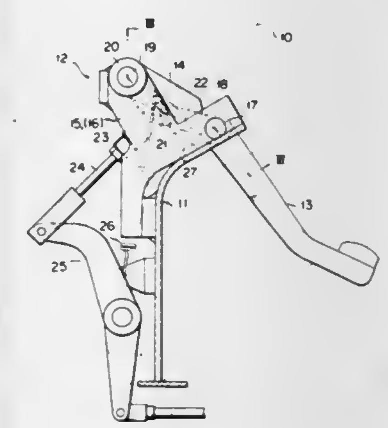

rod means fixedly secured to said second cylinder means; and
linkage means pivotally connected at one end thereof to said rod means, the other end of which is connected to a member to be controlled and operated.

4,372,179
RECIPROCATING-PISTON DRIVE MECHANISM
Anton Dolenc, and Tomas Visek, both of Vienna, Austria, assignors to Steyr-Daimler-Puch Aktiengesellschaft, Vienna, Austria
Continuation-in-part of Ser. No. 887,502, Mar. 17, 1978, abandoned. This application Jul. 18, 1979, Ser. No. 58,629
Claims priority, application Austria, Jan. 25, 1978, 519/78
Int. Cl.³ F16J *1/24*
U.S. Cl. 74—579 E **2 Claims**

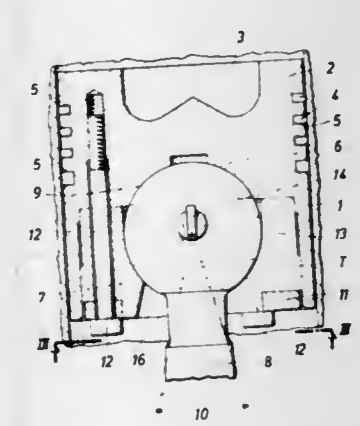

1. A reciprocating-piston drive mechanism comprising
(a) a reciprocating-piston assembly defining a spherical socket and including
(1) a piston body having an axis and defining at least part of the socket, and
(2) piston ring means carried by the piston body,
(b) a connecting rod arranged for pivoting movement in a plane and having
(1) a ball head fitted in the spherical socket of the piston assembly, and
(c) a coupling between the ball head and the piston assembly, the coupling being arranged to transform the pivoting movement of the connecting rod and ball head into a reciprocating rotation of the piston body about the axis thereof and the coupling including
(1) a first coupling member attached to, and non-rotatable relative to the piston body, and forming part of the piston assembly, the first coupling member consisting of two parts defining a joint therebetween extending substantially in the plane and has an end face forming one end of the assembly, the first coupling member defining a part of the socket and having a bore adjacent the socket and extending longitudinally in the plane, the connecting rod and the bore having a common axis in the plane, and the first coupling member further having a coupling slot means extending transversely to the plane and parallel to the axis of the piston body and the coupling slot means being open to the spherical socket, and
(2) a coupling pin rotatably mounted in the ball head and extending transversely to the plane at an oblique angle to the axis of the connecting rod, the coupling pin having respective ends glidingly received in the coupling slot means,
(d) the assembly including a centering ring disposed on the end face and engaging the two parts of the first coupling member for holding them together, and screws extending parallel to the axis of the piston body and securing the centering ring and the two parts to the piston body.

4,372,180
GEAR MOTOR TORQUE REACTION ABSORBER
Parker A. Bollinger, Jr., Slidell, La., assignor to Siemens-Allis, Inc., Atlanta, Ga.
Filed Sep. 26, 1980, Ser. No. 191,274
Int. Cl.³ F16H *57/02;* **F16M** *1/00*
U.S. Cl. 74—606 R **4 Claims**

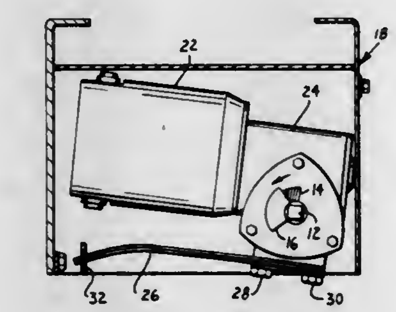

1. In a gear motor mechanism including an electric motor, a gear drive assembly coupled thereto and having an output shaft, and a support structure for the gear motor and drive assembly, the improvement comprising
a first stop coupled to said output shaft to rotate therewith;
a second stop rigidly secured with respect to said support structure and disposed in the path of said first stop; and
a torque absorbing elongate leaf spring coupled between said motor and said support structure for resiliently resisting rotation of said motor in a plane perpendicular to said output shaft, said leaf spring having a first end coupled to said gear drive assembly, and a second end secured to said support structure to prevent rotation and a plane perpendicular to said output shaft, said second end being free to move longitudinally.

4,372,181
COMPACT POWER WRENCHING MACHINE
James M. Tinsley, Round Rock, Tex., assignor to N-S-W Corporation, Austin, Tex.
Filed Nov. 10, 1980, Ser. No. 205,386
Int. Cl.³ B25B *13/46*
U.S. Cl. 81—57.39 **5 Claims**

1. In a torque wrench including an elongated rigid frame; a force-producing actuator coupled to one portion of said frame; a wrench rotatably mounted on another portion of said frame and being longitudinally spaced from said actuator; a torque applicator having a roller at one end thereof and extending longitudinally from said wrench toward said actuator; a thrust block movably mounted on said frame between said actuator and said applicator, said block having a cam surface which slopes in one direction relative to the longitudinal axis of said frame; and said roller riding on said cam surface; the improvement, wherein:
said thrust block having two parallel shoulders on the opposite sides thereof, said shoulders sloping in a direction, relative to the longitudinal axis of said frame, which is opposite to the direction of said cam surface; and

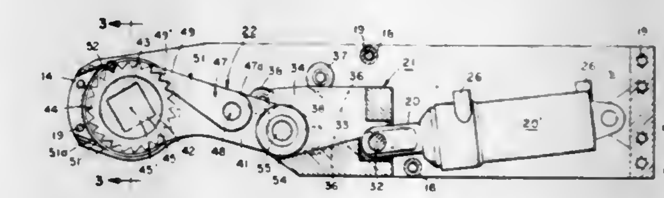

bearing means mounted on said frame to captivate said shoulders therebetween and to cause said block to gradually and simultaneously move longitudinally and transversely, when said block is acted upon by said actuator, to thereby rotate said applicator and said wrench.

4,372,182
WIRE WRAP REMOVING TOOL
Gary L. Kolter, Box 4900 New River Stage, Phoenix, Ariz. 85029
Filed Jan. 16, 1981, Ser. No. 225,685
Int. Cl.³ B25B *7/02*
U.S. Cl. 81—426 **1 Claim**

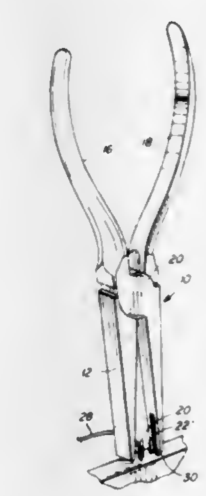

1. A tool for removing a helically wrapped wire from about a terminal pin without damaging the pin, said tool comprising in combination:
(a) a pair of jaws positionable toward and away from one another;
(b) a first jaw of said pair of jaws having a wedge shape tapering longitudinally and terminated by a flat end portion, said first jaw including a first planar working surface for contactingly engaging the wire wrap on a first side of the terminal pin;
(c) a second jaw of said pair of jaws including a second working surface having planar elements for contactingly engaging the wire wrap on a second side of the terminal pin diametrically opposed from the first side, said first and second working surfaces being oriented to effect positioning of said first and second working surfaces parallel to one another on contact with the wire wrap to apply uniformly distributed opposing forces to the wire wrap to squeeze it in one axis;
(d) a foot protruding perpendicularly from the terminal end of said second jaw toward said first jaw and extending beneath said end portion of said first jaw on closure of said pair of jaws, said foot being insertable beneath the wire wrap for lifting the wire wrap off the terminal pin on application of an upward force to said tool, said foot including a slot for receiving the terminal pin;

(e) a recess having parallel sides disposed within said second working surface and extending longitudinally along said second jaw for partially receiving the engaged side of the wire wrap, said recess being interconnected and aligned with said slot of said foot and extending therefrom along said second jaw; and

(f) means for actuating said pair of jaws to squeeze the opposed first and second sides of the wire wrap toward one another whereby the configuration of the wire wrap is distorted to reduce frictional contact of the wire wrap with the terminal pin and permit sliding disengagement of the wire wrap from the terminal pin on application of the upward force of said tool.

4,372,183

PROGRAM CONTROLLED PUNCHING AND NIBBLING MACHINE

Esko Lehtinen, Gothenburg, Sweden, assignor to Pullmax Aktiebolag, Sweden

Filed Dec. 5, 1980, Ser. No. 213,662

Claims priority, application Sweden, Dec. 7, 1979, 7910117

Int. Cl.³ B26D *7/06*

U.S. Cl. 83—71 **7 Claims**

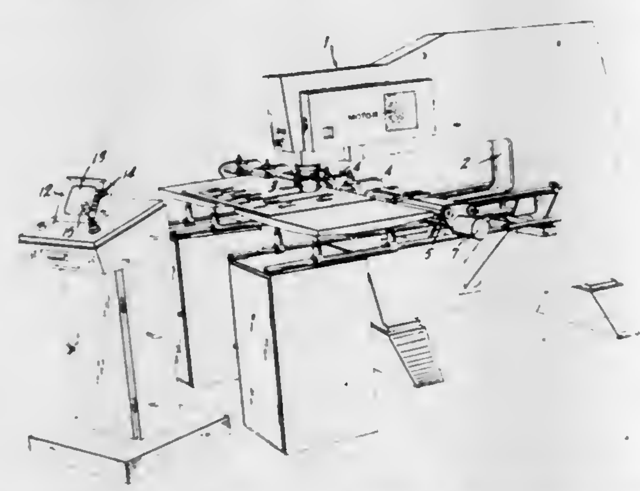

1. In a punching and nibbling machine comprising a frame, a first slide movable on said frame in a first linear direction, a second slide movable on said first slide in a second linear direction at least approximately perpendicular to said first direction, means on said second slide for holding a workpiece, and a tool reciprocable on said frame for periodic engagement with and disengagement from said workpiece,

means for moving said slides comprising a program-controlled motor for each of said slides, a linear transmission element driven by each of said motors respectively and movable in the direction of movement of the respective slide, and resilient means coupling each of said slides individually with the respective transmission element for movement of said transmission element by said motor while the respective slide is held stationary by engagement of said tool with said workpiece, said slide being moved to predetermined position by force stored in said resilient coupling means upon disengagement of said tool from said workpiece.

4,372,184

CUTTING ASSEMBLY

Wayland I. Fisher, Boise, and Marvin J. Petersen, Homedale, both of Id., assignors to J. R. Simplot Company, Boise, Id.

Filed Feb. 25, 1981, Ser. No. 238,007

Int. Cl.³ B26D *1/03*

U.S. Cl. 83—98 **22 Claims**

13. For use in a system including an hydraulic pressure conduit, means for propelling a product one at a time through said pressure conduit along with a propelling hydraulic fluid, an inner discharge conduit, and an outer discharge conduit positioned generally concentrically about the inner discharge conduit, a cutting assembly for dividing the product into a generally cylindrical central core for discharge to said inner conduit and a plurality of longitudinally extending outer strips each having a generally arcuate cross section for discharge to said outer conduit, comprising:

an exterior housing connected between said pressure conduit and said outer conduit and having a central longitudinal passage formed therein;

a generally cylindrical hollow core knife mounted on said inner conduit and projecting axially toward said pressure conduit within said housing passage, said core knife having a generally circular cutting edge formed at its axial end opposite said inner conduit; and

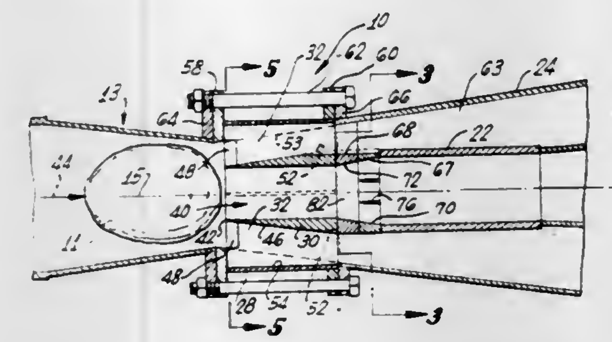

a plurality of strip knives each extending radially between said core knife and said housing, each of said strip knives including a cutting edge presented generally in the same direction as said core knife cutting edge, said core knife and said strip knives being operable to divide the product into the core for passage through said core knife into said inner conduit and said outer strips for passage between said core knife and said housing for passage into said outer conduit.

4,372,185

MEAT CUTTING BAND BLADE MACHINE

Karl Pila, 5605 Greenwood Ave., Cote St. Luc, Quebec, Canada

Filed Feb. 23, 1981, Ser. No. 237,268

Int. Cl.³ B23D *53/06*

U.S. Cl. 83—101 **9 Claims**

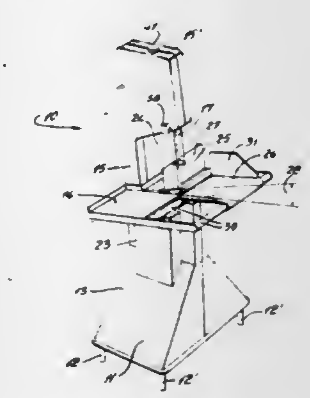

1. A meat cutting machine for slice cutting soft boneless meats, said machine comprising a base, a vertical band blade support frame secured to said base, blade support means secured in said band blade support frame, a flat band blade supported by said support means, drive means drivingly connected to said blade support means, an opening in said band blade support frame to expose a meat cutting area along a straight path of said band blade, a stationary table secured below said meat cutting area, a horizontally displaceable meat support table displaceable on an axis parallel to the plane of said flat band blade to displace an end portion of a piece of meat placed on a support surface thereof against a cutting edge of said band blade; said horizontally displaceable meat support table having its support surface inclined rearwardly downward at an angle lying within the range of from 5° to 15° with said band blade extending at substantially a right angle with respect to said support surface of said displaceable meat support table, said blade support means being a pair of band support wheels rotatably secured in a spaced apart manner by said support frame, said band blade being an endless blade having a straight cutting edge and supported about said wheels, said stationary table and said displaceable meat support table being secured to said band blade support frame and have their support surface inclined in the same plane, said wheels having their centers rotatably secured on an axis inclined rearwardly at the same angle as said surfaces, said support surfaces being disposed at right angles to said straight path of said band blade, and a thickness gauge plate displaceably secured above said stationary table and extending parallel to the plane of said blade, means to displace said gauge plate to a predetermined distance from said meat cutting area of said blade to obtain a desired slice thickness of said piece of meat placed on said displaceable meat support table.

4,372,186

HUMBUCKING ELECTROMAGNETIC PICKUP FOR STRINGED MUSICAL INSTRUMENTS

Kenneth T. Aaroe, 2276 John Ct., Castro Valley, Calif. 94546

Filed Feb. 17, 1981, Ser. No. 235,004

Int. Cl.³ G10H *3/18*

U.S. Cl. 84—1.15 **15 Claims**

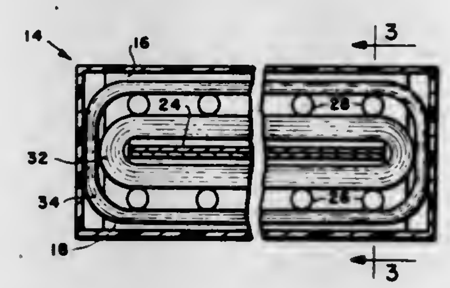

1. A humbucking electromagnetic pickup for musical instruments having ferromagnetic strings, said pickup comprising:

magnetic means for generating a magnetic flux path through the ferromagnetic strings of a musical instrument;

a sensing coil positioned in said flux path for generating output signals corresponding to flux variations produced by vibration of said strings; and

a humbucking coil in series with said sensing coil but wound in an opposite direction thereto, said humbucking coil being concentric with said sensing coil and having a greater inside dimension than the outside dimension of said sensing coil.

4,372,187

NOVEL GUITAR-LIKE ELECTRONIC MUSICAL INSTRUMENT

Arne L. Berg, La Puente, Calif., assignor to AB Laboratories, a limited partnership, Van Nuys, Calif.

Filed May 1, 1981, Ser. No. 259,519

Int. Cl.³ G10H *3/00*

U.S. Cl. 84—1.16 **4 Claims**

1. A guitar-like electronic musical instrument including: an electronic tone generating circuit and control means for controlling said tone generating circuit, said control means including an intentionally damped vibratory element;

said control means including, in addition, a neck control element;

a potentiometer mechanically coupled to said neck control element and having a slider arm responsive to transverse displacement of said neck control element to change its position, and having a slider-arm terminal at which a variable voltage appears in response to the change in position of said slider arm;

an electronic gate having an input terminal coupled electrically to said slider-arm terminal and having an output terminal and a control terminal;

a touch sensing circuit coupled electrically to said neck control element and responsive to the touching of such element to produce an output signal;

means for coupling said output signal from said touch sensing circuit to said control terminal of said electronic gate;

said gate being responsive to said output signal from said touch sensing circuit to produce a closed condition,

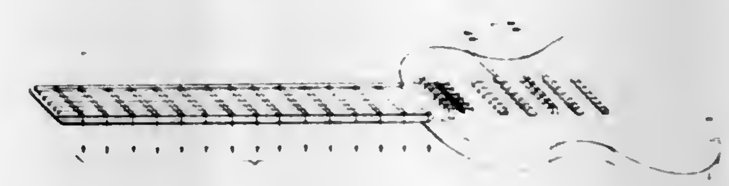

whereby said voltage at said slider-arm terminal appears at the output of said gate;

a first amplifier having a first non-inverting input terminal and a first output terminal;

a second amplifier having a second non-inverting input terminal and a second output terminal;

said first non-inverting terminal being electrically coupled to said slider arm terminal;

said second non-inverting terminal being connected to said output terminal of said electronic gate;

a storage capacitor coupled between said second non-inverting input terminal and reference potential;

a differential amplifier having first signal and second signal input terminals and a difference signal output terminal;

said first output terminal of said first amplifier being connected to said first signal input terminal;

said second output terminal of said second amplifier being coupled to said second signal input terminal;

and means for coupling said difference signal output terminal to said tone generating circuit.

4,372,188

Patent Not Issued For This Number

4,372,189

AMPLIFICATION ARRANGEMENT FOR VIOLIN SOUND BARS

Charles S. Johnson, 5208 12th St., So., Arlington, Va. 22204

Filed Feb. 11, 1982, Ser. No. 347,980

Int. Cl.³ G10D *3/02*

U.S. Cl. 84—276 **3 Claims**

1. In a violin or like instrument including a hollow body, a bridge located on the hollow body and a wooden sound bar

located within the hollow body under the left foot of the bridge, the improvement comprising a sound enhancing metallic weight member inserted into the sound bar at a location

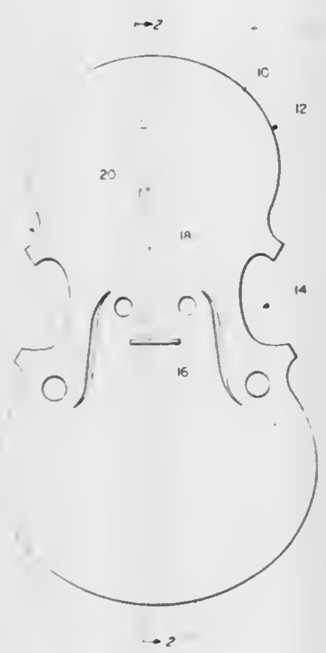

approximately one half of the distance between the bridge and the upper end of the hollow body of the violin, and of a weight of less than about one gram.

4,372,190
SAXOPHONE MOUTHPIECE HAVING REED ADJUSTMENT MEANS
Jay S. McGuerty, 115 Beckham Way, Cincinnati, Ohio 45246
Continuation-in-part of Ser. No. 202,684, Oct. 31, 1980, abandoned. This application Sep. 23, 1981, Ser. No. 304,846
Int. Cl.^{3} G10D *9/02*
U.S. Cl. 84—383 R **26 Claims**

1. In a woodwind musical instrument mouthpiece of the type including a hollow member having a mouth engaging end terminating in a generally arcuate edge and a lower face extending forwardly of said edge configured to mount an elongated reed having a front tip position adjacent said arcuate edge and a rear edge surface spaced rearwardly from said tip and extending downwardly from said lower face, the improvement in combination therewith comprising means for urging said reed against the mouthpiece face comprising a rotatably mounted cylindrical roller and positioned and configured to bear against the outer surface of the reed and means for accurately adjusting the longitudinal position of said reed on the mouthpiece to place the reed tip at a desired location with respect to said arcuate edge.

4,372,191
ROTARY BRAIDING MACHINE
Vincent A. Iannucci, West Lawn, and Rudolf H. Haehnel, Reading, both of Pa., assignors to Rockwell International Corp., Pittsburgh, Pa.
Filed Mar. 12, 1982, Ser. No. 357,395
Int. Cl.^{3} D04C *3/42*
U.S. Cl. 87—48 **14 Claims**

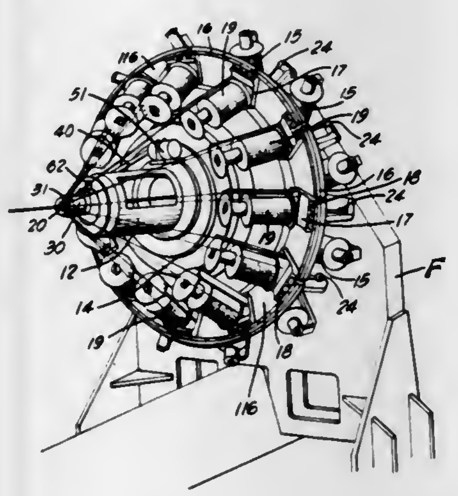

1. In a rotary braiding machine having power means for rotating the machine and for drawing the strand from supply bobbins toward a point of convergence where interlacing and braiding takes place;

a. an outer set of bobbins carrying strands;
b. means mounting said outer set of bobbins for travel in one direction along a circular path concentric with the center axis of the machine;
c. an inner set of bobbins carrying strands;
d. means mounting said inner set of bobbins for travel along a circular path in a direction opposite to that of said outer set of bobbins;
e. outer strand guide means for guiding the strand from the outer set of bobbins over and under the bobbins of the inner set during rotation of the machine, thereby to cause interlacing between the strands of the inner and outer sets of bobbins as they travel in opposite directions;
f. a cylindrical guide member on the center axis of the machine projecting forwardly from the bobbin-mounting means toward the point of strand convergence, said strands being drawn over the forward edge of said cylindrical guide member as said strands move toward said point of convergence and interlacing;
g. a sleeve member mounted concentriclly on said cylindrical guide member; and
h. means for providing relative reciprocating motion in the axial direction between said sleeve member and said guide member, whereby the forward edge of one of said members engages said strand when said one member is in its forward position eliminating strand contact with said other member but disengages from said strand when said one member is in its rearward position allowing strands to again contact said other member.

4,372,192
FIRST MOTION DETECTOR
Jeffrey A. Lienau, Huntsville, Ala., assignor to The United States of America as represented by the Secretary of the Army, Washington, D.C.
Filed Dec. 22, 1980, Ser. No. 219,046
Int. Cl.^{3} F41F *25/00;* **F41C** *27/00*
U.S. Cl. 89—1.8 **3 Claims**

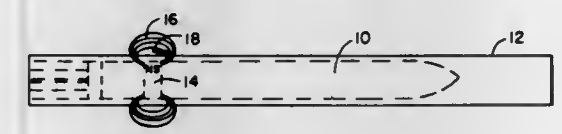

1. A first motion detector device comprising a rocket mounted to launching means, said rocket having magnetic means thereon that produces a magnetic field, detector means mounted to said launching means for said rocket and being positioned in a forward portion of said magnetic field, said detector means being made of such a material and having electronics connected thereto to produce an output which indicates actual movement of said rocket relative to said launching means as said rocket moves from said launching means.

4,372,193
SYSTEM WITH CONSTANT FORCE ACTUATOR
Lowell R. Hall, Elmwood, Ill., assignor to Caterpillar Tractor Co., Peoria, Ill.
PCT No. PCT/US80/01741, § 371 Date Dec. 24, 1980, § 102(e) Date Dec. 24, 1980, PCT Pub. No. WO82/02230, PCT Pub. Date Jul. 8, 1982
PCT Filed Dec. 24, 1980, Ser. No. 273,877
Int. Cl.^{3} F15B *11/10*
U.S. Cl. 91—420 **7 Claims**

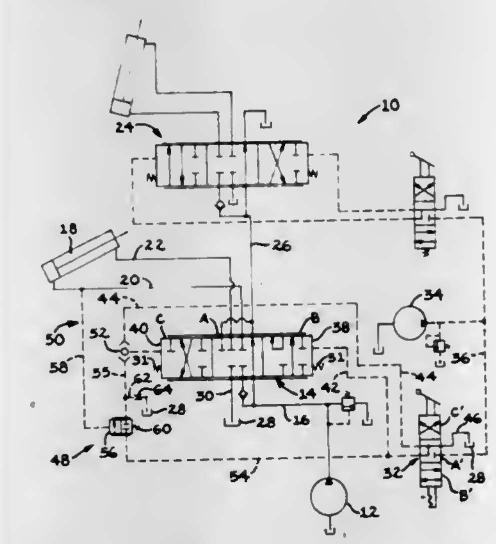

1. In a fluid system (10) having a fluid source (12); a tank (28); an actuator (18); a pilot operated control valve (14) having first and second ends (38,40) and movable between an actuated position (B) at which said source (12) communicates with said actuator (18) and is blocked from a downstream control valve (24), and a neutral position (A) at which fluid from said source (12) is blocked from communication with said actuator (18) and communicates with said downstream control valve (24) through said pilot operated control valve (14); a source (34) of pressurized pilot fluid; and a pilot control valve (32) connected to said source (34) of pressurized pilot fluid and said first and second ends (38,40) and movable between a neutral position (A') at which said source (34) of pressurized pilot fluid is blocked from communication with said first and second ends (38,40), and an actuated position (B') at which pressurized pilot fluid from said source (34) is communicated with the first end (38) establishing a differential pressure between the first and second ends (38,40); the improvement comprising:

means (48) for modulatably reducing the pilot differential pressure between the first and second ends (38,40) of the pilot operated control valve (14) only at the actuated position (B) of the pilot operated control valve (14) in response to the fluid pressure in said actuator (18) reaching a predetermined level while said pilot control valve (32) is still in said actuated position (B'), so that said pilot operated control valve (14) is controllably moved between the neutral and actuated positions (A, B) to maintain said predetermined pressure level in said actuator (18) and to pass working fluid to the downstream control valve (24) and subsequently to said tank (28).

4,372,194
INTERNAL COMBUSTION ENGINE PISTON
Jean P. Vallaude, Orsay, France, assignor to Regie Nationale Des Usines Renault, Boulogne-Bellancourt, France
PCT No. PCT/FR79/00029, § 371 Date Nov. 30, 1979, § 102(e) Date Nov. 30, 1979, PCT Pub. No. WO79/00862, PCT Pub. Date Nov. 1, 1979
PCT Filed Mar. 30, 1979, Ser. No. 177,769
Claims priority, application France, Mar. 31, 1978, 78 09460
Int. Cl.^{3} F01P *1/04;* **F02F** *3/16*
U.S. Cl. 92—176 **3 Claims**

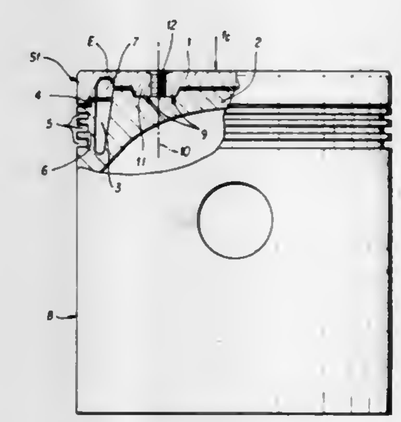

1. A piston for an internal combustion engine, comprising:
a circular steel upper head element having an upper surface defining the entire piston face and a lower surface which are axially spaced to form a first thickness;
a circular light alloy lower skirt element having a radially outer surface, an upper surface covered by said lower surface of said upper element, said lower element including at least one first circumferential groove on the peripheral surface thereof;
means for securing said upper and lower elements to one another;
an annular U-shaped cavity defined in said upper surface of said lower element adjacent said peripheral surface, said cavity extending axially at least to a position closely adjacent said at least one first circumferential groove;
an annular U-shaped second groove defined in said lower surface of said upper element and facing said cavity to form a dead space, said second groove extending axially towards said upper surface of said upper element by a distance sufficient that the upper extremity of said second groove is separated from said upper surface of said upper element by less than said first thickness,
wherein only said lower element includes at least one of said first grooves and wherein said upper and lower elements are centered only by contacting circumferential surfaces adjacent the peripheries of said upper and lower elements, said contacting circumferential surfaces acting to seal said dead space, further including:
at least one boss extending from said lower surface of said upper element in an area radially inward from said second groove;
at least one second cavity on said upper surface of said lower

element, each said second cavity corresponding to one said at least one boss;

radially extending contact surfaces between said upper and lower elements, said radially extending contact surfaces consisting only of said at least one boss and corresponding cavity; and

a threaded hole in said upper element at each said at least one boss, wherein said means for securing is engaged between at least one said second cavity and threaded hole.

4,372,195
MASS FLOW THERMAL COMPENSATOR
John Dorius, 8601 International Ave., Unit 203, Canoga Park, Calif. 91304
Filed Nov. 17, 1980, Ser. No. 207,164
Int. Cl.³ F24C *15/20*
U.S. Cl. 98—115 R **12 Claims**

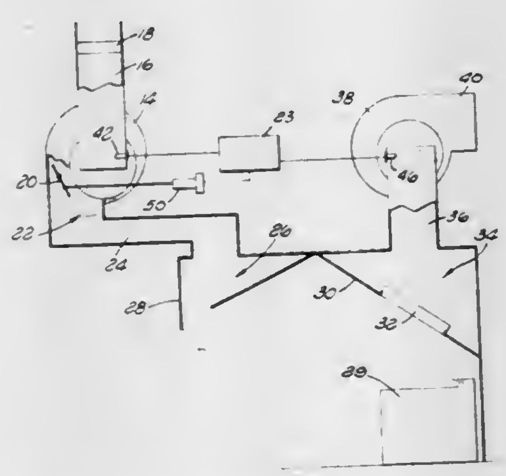

1. In an apparatus for balancing inlet air flow against exhaust air flow in a system for exhausting air from a work space, the apparatus containing an inlet fan including a spoiler, in fluid communication with a source of fresh air and discharging into the workspace to define an inlet air passage, and an exhaust fan in fluid communication with the workspace and discharging externally of the workspace to define an exhaust air passage, the improvement comprising:

an inlet air temperature sensor in the inlet air passage; and

control means for controlling the weight rate of air through the inlet fan in response to the temperature sensed by the inlet air temperature sensor, comprising means for regulating the position of the spoiler to maintain a selected relationship between the weight rate of inlet air and an actual or assumed weight rate value of exhausted air.

4,372,196
INSULATING AND DRAFT PREVENTING AUTOMATIC SHUTTER FOR ATTIC AND OTHER EXHAUST TYPE FANS
Donald L. Henderson, 2536 E. 56th Pl., Tulsa, Okla. 74105
Filed Mar. 30, 1981, Ser. No. 249,169
Int. Cl.³ F24F *7/06*
U.S. Cl. 98—116 **7 Claims**

1. An insulating and draft preventing automatic shutter for the air intake opening of an exhaust fan and comprising a horizontally positioned mounting frame means adapted for installation in the opening, insulating louver assembly means pivotally disposed within the mounting frame and automatically movable by the flow of air between open and closed positions in response to activation and deactivation of the fan the louver assembly means comprising oppositely disposed channel members pivotally secured, at a point between the ends of the channel members, to the mounting frame; an inner frame means composed of an insulating panel member, positioned within the channel members and pivotally secured thereto at the proximity of one end of both the channel members and the inner frame means which will be upstream of the flow of air through the mounting frame when in the open position; and means during the open position to preclude pivotation of the channel members to a position substantially trans-

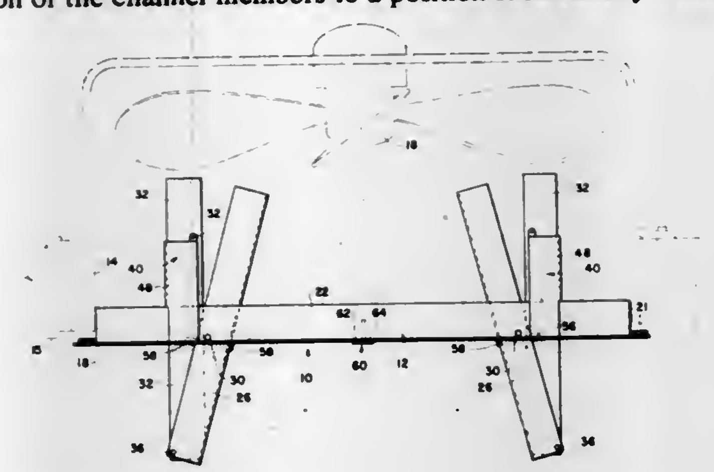

verse to the mounting frame, yet permit pivotation of the inner frame to a position substantially parallel to the flow of air through the mounting frame.

4,372,197
COLD WEATHER INLET FOR VENTILATING SYSTEMS
Norman D. Augsburger, Muskogee, Okla., assignor to Acme Engineering & Manufacturing Corporation, Muskogee, Okla.
Filed Nov. 14, 1980, Ser. No. 206,839
Int. Cl.³ F24F *13/18;* F16K *49/00*
U.S. Cl. 98—118 **5 Claims**

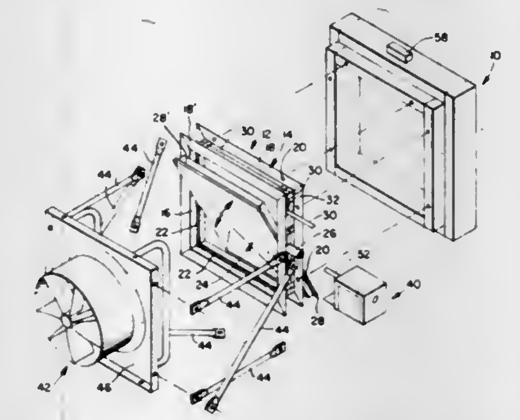

1. An inlet for use in a ventilating system to permit air to enter a building, comprising:

a frame to be positioned within a wall of the building to define an opening through which air may enter the building, said frame having four wall sections provided with: flanges extending outwardly therefrom, and lips along the mid portions thereof extending inwardly therefrom into the opening defined by the frame;

a single panel, a shaft journaled for rotation within two of said wall sections and attached to said single panel at the mid portion thereof permitting said panel to rotate within said frame to open and close the opening, said panel including:

a first flange extending outwardly from one side thereof above said shaft, and

a second flange extending outwardly from the other side of said panel below said shaft, such that when said panel is in closed position a tight seal exists along the periphery of said single panel at the juncture of said lips which extend inwardly from said four wall sections and said first and second flanges which extend outwardly from opposite sides of said single panel;

an electrical heating cable, means positioning said cable along the periphery of said four wall sections of said frame between said flanges which extend outwardly from said frame such that said cable extends laterally along said frame in close proximity to said lips and said first and second flanges of said panel enabling heating thereof; and

means for rotating said single panel and energizing said electrical heating cable.

4,372,198
LANTERN HOT PLATE
Henry D. Stover, Jr., c/o George Spector, 3615 Woolworth Bldg., 233 Broadway, and George Spector, 3615 Woolworth Bldg., 233 Broadway, both of New York, N.Y. 10007
Filed Apr. 13, 1981, Ser. No. 253,618
Int. Cl.³ A47J *37/00*
U.S. Cl. 99—340 **2 Claims**

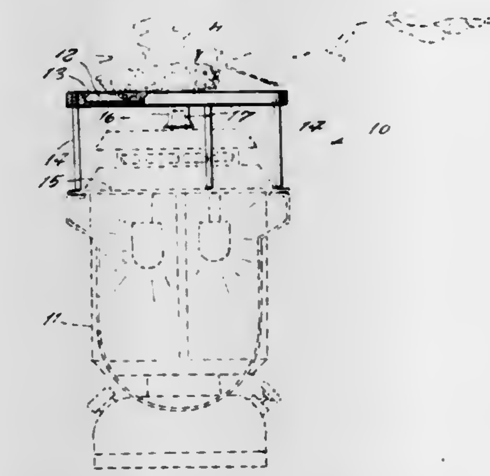

1. A lantern hot plate, comprising in combination, a circular metal plate, an upward peripheral lip forward on said metal plate, a lantern and means for securement of said metal plate upon a top of said lantern, wherein said hot plate includes oven means for converting said hot plate into an adjustable oven, wherein means under center of said metal plate prevent sideward shift of said hot plate upon said lantern, wherein said oven means comprises a cylindrical member having vertically spaced tabs adapted to engage said plate at various levels whereby said member encircles said plate and extends thereabove at various levels.

4,372,199
ROTARY SKEWER COOKER
Leo F. Brown, and R. S. Myerly, both of Chillicothe, Ohio, assignors to Wear-Ever Aluminum, Inc., Chillicothe, Ohio
Filed Feb. 12, 1981, Ser. No. 233,775
Int. Cl.³ A47J *37/04*
U.S. Cl. 99—341 **6 Claims**

1. A rotary skewer cooker comprising

a plurality of skewers, said skewers being generally vertically oriented,

a skewer drive mechanism at least partially mounted in a housing, said skewer drive mechanism being selectively innerconnectable with each of said skewers for rotating each of said skewers relative to that skewer's axis,

a heat source connected to said housing, said heat source being adapted to cook food on said skewers,

a generally tubular chimney seated on said housing, said chimney extending upwardly from said housing so as to enclose food products carried on said skewers, said chimney being open at the top end thereof for permitting manual accessability to one end of each skewer during use of said cooker, said accessability allowing installation and removal of said skewers with said skewer drive mechanism in generally vertical fashion within said chimney relative to said housing during use of said cooker, and

chimney seat structure partially carried by said chimney and partially carried by said housing, said seat structure being constructed so that an air gap is established between said housing and the bottom edge of said chimney when said chimney is in operative assembly with said housing, said

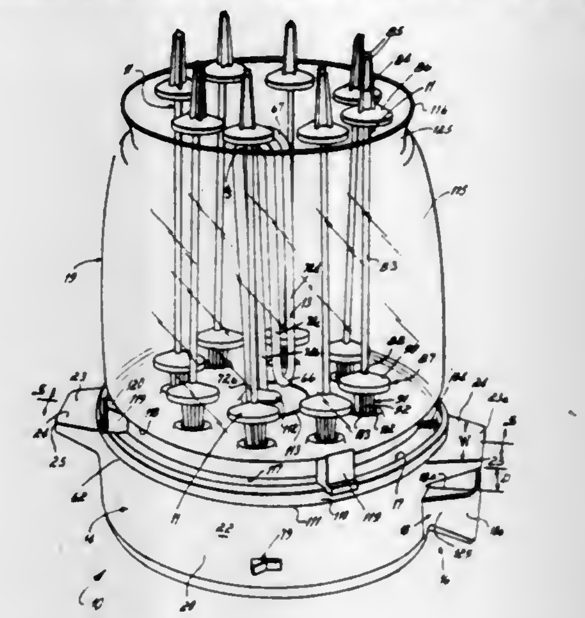

air gap permitting air flow up through said chimney during use of said cooker.

4,372,200
DIRECT FIRED FRYER WITH WIPER MEANS
Andrew A. Caridis, Foster City; Clark K. Benson, Millbrae, and Anthony A. Caridis, Belmont, all of Calif., assignors to Heat and Control, Inc., San Francisco, Calif.
Filed May 4, 1981, Ser. No. 260,101
Int. Cl.³ A47J *37/12*
U.S. Cl. 99—404 **9 Claims**

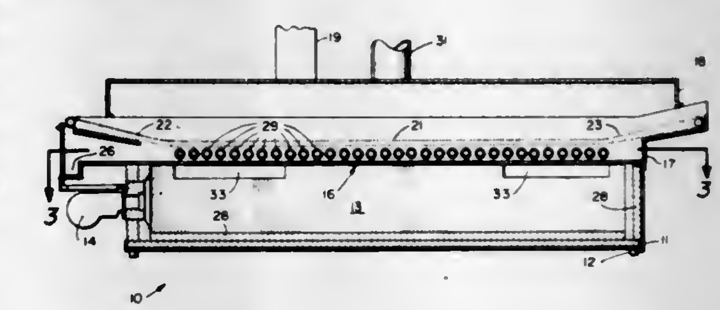

1. An improved, direct fired fryer for cooking foodstuffs, comprising a frame, means on said frame defining a combustion chamber, burner means serving to heat the atmosphere within said combustion chamber, means providing a cooking vat on said frame serving to hold a supply of cooking oil or the like and including a generally planar bottom wall serving as a heat transmitting member between said combustion chamber and the cooking oil within said vat, first, second and third manifold means on said frame, said first manifold means being in communication with said combustion chamber, said first and second manifold means including a first set of heat conducting tubes extending therebetween, said second and third manifold means including a second set of heat conducting tubes extending therebetween, said sets of heat conducting tubes serving to transfer heat from the combustion chamber to the cooking oil and being disposed in said cooking vat below the nominal oil liquid level therein and above said bottom wall, means on said fryer providing an exhaust stack in communication with said third manifold means, said combustion chamber, manifold means, conducting tubes and exhaust stack communicating in a circuit so that the heated atmosphere from said combustion chamber traverses sequentially said first manifold means and first set of heat conducting tubes, said second manifold means and said second set of heat conducting tubes and thence through said third manifold means and the exhaust stack.

4,372,201

DEVICE FOR PRODUCING A BUNDLE OF PAPER SHEETS

Ernst Dudziak, Harsewinkel; Gerd-Georg Kwauka, Gutersloh; Arthur Plate, Lubbecke, and Hermann Lübeck, Espelkamp-Frotheim, all of Fed. Rep. of Germany, assignors to Reinhard Mohn G.m.b.H., Gutersloh, Fed. Rep. of Germany

Division of Ser. No. 963,125, Nov. 22, 1978, Pat. No. 4,311,090. This application Jun. 29, 1981, Ser. No. 278,376

Int. Cl.³ B65B *13/02*

U.S. Cl. 100—7 **45 Claims**

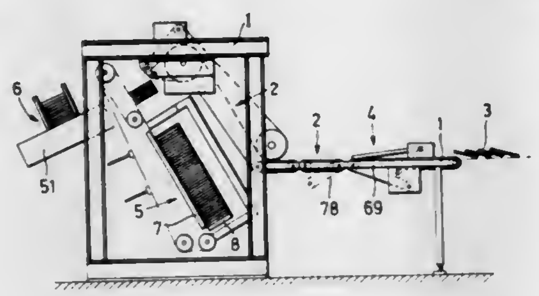

1. A device for producing a bundle from an overlapping sheet by sheet stream of paper sheets according to a method wherein the sheets are serially free fall delivered to a downwardly moving inclined base while the sheets are continuously jogged and pressed as the stack is being formed, the serial free fall delivery of the sheets being interrupted after a predetermined number of delivered sheets and the compressing being effected by moving a compressor downwardly against the top of the stack at a rate faster than the stack is moving and the compressed stack is banded to form the bundle, said device comprising: a machine frame, a stacking table within said frame, said stacking table having means defining an inclined back wall for supporting the stack and base plate means arranged vertically relative to the plane of said defined back wall for receiving the free-fall delivered sheets, feed means carried by said machine frame for free-fall delivering a sheet by sheet stream to said stacking table, circulating conveying means carried by said machine frame, said base plate means carried on said circulating conveying means, means for pressing the formed stack also carried by said circulating conveying means, and means for separating the formed stacks one from the next following stack, said inclined back wall including stop face means for receiving the sheets in abutting relationship therewith at the terminus of their free fall; said circulating conveyor means comprising first and second circulating conveyors, said first circulating conveyor carrying said base plate means, and said pressing means comprising follow-up transporter plate means carried by said second circulating conveyor along a common path as the base plate means and substantially parallel thereto and drive means for moving said second circulating conveyor faster than said first circulating conveyor to bring the follow-up transporter plate means against the top of the stack carried by the base plate means during the movement of the base plate means.

4,372,202

EMERGENCY BRAKE FOR PRESSES

Russell J. Cameron, Rochester, Mich., assignor to Ross Operating Valve Company, Detroit, Mich.

Filed Nov. 20, 1980, Ser. No. 208,546

Int. Cl.³ B30B *15/10*

U.S. Cl. 100—53 **6 Claims**

1. An emergency brake for a press or the like having a ram and driving element operatively connected to said ram for operating said ram through a cycle of operation from a home position to a working position and back to a home position, said emergency brake comprising a first brake element fixed for rotation upon operation of said driving element, said first brake element having a braking surface extending outwardly from a surface thereof, a second brake element fixed against rotation relative to said first brake element, said second brake element having a braking surface complimentary to the braking surface of said first brake element, and means for actuating said second brake element from a released position wherein said braking surfaces will not interfere with each other upon relative rotation of said brake elements upon the initiation of a cycle of the press or the like and a braking position wherein said braking surfaces may engage each other to prevent further rotation of said first brake element after a predetermined move-

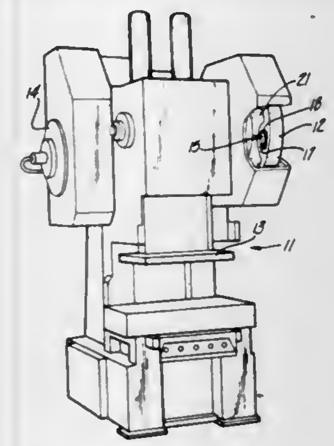

ment of said first brake element less than that required for it to reach when the driving element is in its working position, said braking surfaces of said first and second brake elements being spaced from each other when said ram is in its home position and said second brake element is in its braking position, the spacing of said surfaces when in such positions being such that said surfaces will engage upon movement of said ram in a small increment beyond its home position towards its working position.

4,372,203

DOCTOR-BLADE SUPPORT MEANS FOR SILK SCREEN PRINTING MACHINE

Umberto Brasa, Via Ippolite Nievo No. 8, Milan, Italy

Filed Jul. 30, 1979, Ser. No. 61,659

Int. Cl.³ B41L *13/18*

U.S. Cl. 101—124 **8 Claims**

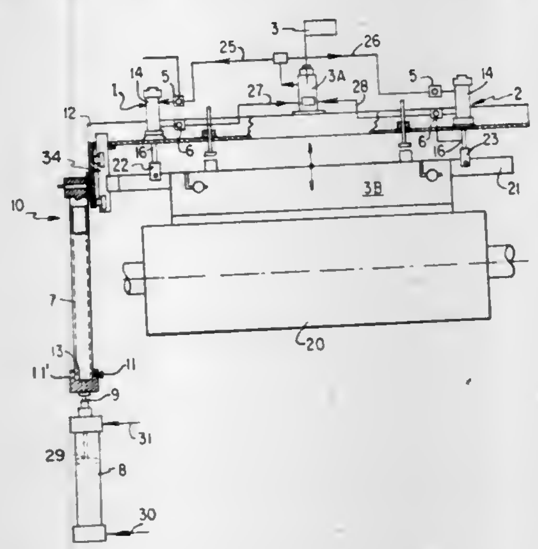

1. For use in a silk screen printing machine of the type including an impression cylinder and a doctor-blade arrangement mounted parallel to the surface of the impression cylinder and support means carrying said doctor-blade and having opposite ends; a pair of vertically arranged, reciprocably movable bearing columns having their upper ends coupled to said support ends and their lower ends coupled to a pair of fluid pressure operated piston and cylinder devices, each piston having a plunger extending outward of the cylinder coaxial with with one of said bearing columns and coupling means linking each column with each plunger, respectively, said coupling means comprising a ring mounted upon each column

and having a bore capable of receiving said plunger therein, said columns being coaxial with the respective pistons of said piston and cylinder devices, control valve means for controlling the flow of pressurized fluid from a source thereof to said fluid pressure operated piston and cylinder devices to raise and lower the bearing columns for moving the doctor-blade relative to the impression cylinder.

4,372,204

LITHOGRAPHIC SHEET FED PRESS HAVING MEANS FOR CLEARING A JAMMING CONDITION

Georg Herzan, Bad Soden, and Claus Simeth, Offenbach am Main; Herbert Rebel, Rodgau, all of Fed. Rep. of Germany, assignors to M.A.N.-ROLAND Druckmaschinen Aktiengesellschaft, Fed. Rep. of Germany

Filed Oct. 31, 1980, Ser. No. 202,625

Claims priority, application Fed. Rep. of Germany, Nov. 2, 1979, 2944272

Int. Cl.³ B41F *13/28, 13/40*

U.S. Cl. 101—145 **9 Claims**

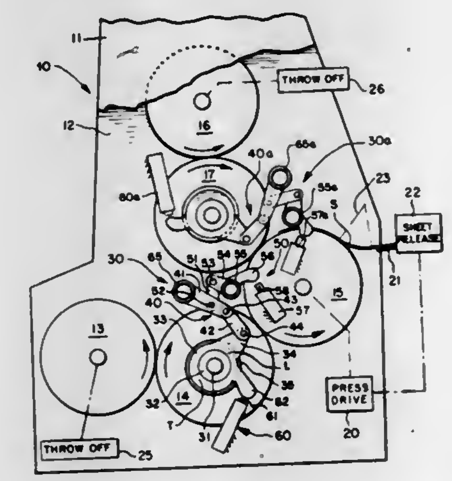

1. A lithographic sheet fed press having means for clearing a jamming condition comprising, in combination, a pair of frame plates, a plate cylinder, blanket cylinder and an impression cylinder all having stub shafts journaled in the respective frame plates and arranged serially for rolling engagement of the cylinders with one another, means for feeding sheets to the impression cylinder, eccentric bushings interposed between the stub shafts of the blanket cylinder and the frame plates, the eccentric bushings having respective operating arms, toggle linkages respectively interposed between the arms and the associated frame plate and settable in a slightly overcenter operating condition for maintaining normal printing pressure between the blanket cylinder and the impression cylinder, means for relieving pressure between the blanket and impression cylinders upon the occurrence of a jamming condition in which a plurality of sheets become wedged between such cylinders, said pressure relieving means including (a) a toggle-breaking first power actuator laterally coupled to the toggle linkages for breaking the same to the opposite side of dead center, (b) a back-off second power actuator coupled to the bushings for imparting substantial rotation to the bushings accompanied by relief of pressure and full collapse of the toggle linkages with scissoring action, (c) means for sequentially energizing the first and second power actuators, and means for subsequently resetting the toggle linkages to the overcenter operating condition following removal of the wedged sheets.

4,372,205

APPARATUS FOR BENDING A PRESSURE ROLL OF A ROTARY PRINTING PRESS

August Pflaum, Augsburg, Fed. Rep. of Germany, assignor to M.A.N.-ROLAND Druckmaschinen Aktiengesellschaft, Augsburg, Fed. Rep. of Germany

Filed Oct. 3, 1980, Ser. No. 193,466

Claims priority, application Fed. Rep. of Germany, Oct. 9, 1979, 2940878; Feb. 15, 1980, 3005690

Int. Cl.³ B41F *9/06, 13/26*

U.S. Cl. 101—153 **4 Claims**

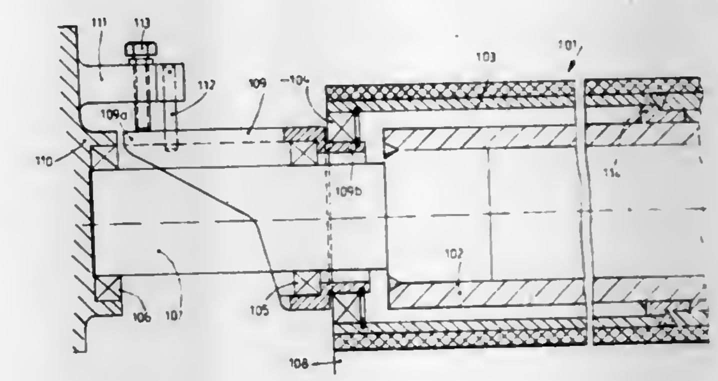

1. Apparatus for bending a pressure roll of a rotary printing press which is composed of an axle and a cylindrical shell mounted on the axle and maintained parallel to a counter-cylinder or counter-roll, said apparatus including the improvement wherein:

said axle is a rotary axle on which said shell is fixed by at least one connection piece (**14**) of a configuration permitting transmission of bending moments exerted on said shell;

a pivoted lever (**109**), swingable in the bending plane of the pressure roll (**101**) and at least partly tubular, is provided which has a tubular portion surrounding at least the inner portion of the adjacent axle stub end (**107**) and supported and bearing on said axle end by means of a first swing bearing (**105**) between an end of the pressure roll and a sidewall member (**110**) in which said axle is supported by a bearing, said lever having a first lever arm (**109***a*) for application thereto of a force generating an angular moment about the pivot of the lever and a tubular second lever arm (**109***a*) having a second swing bearing for exerting a bending moment on said shell (**103**) through said second swing bearing (**104**), and

means are provided for applying said force to said first lever arm (**109***a*) in order to cause said second lever arm (**109***b*) to exert bending moment on said shell, said force applying means including means (**112**) for circumferentially fixing said lever.

4,372,206

DEVICE FOR CONTROLLING THE MOVEMENT OF A WEB THROUGH A PRINTING MACHINE

Eric Tison, Perthes, and Paul Herve, Viry-Chatillon, both of France, assignors to Codimag, Perthes and Ets. Destouche, S. Orge, both of, France

PCT No. PCT/FR80/00060, § 371 Date Dec. 9, 1980, § 102(e) Date Dec. 9, 1980, PCT Pub. No. WO80/02258, PCT Pub. Date Oct. 30, 1980

PCT Filed Apr. 18, 1980, Ser. No. 224,541

Claims priority, application France, Apr. 18, 1979, 79 09719

Int. Cl.³ B41F *13/54*

U.S. Cl. 101—228 **7 Claims**

1. A printing machine comprising:

a rotary printing cylinder having a printing speed for printing a web, with the possibility of changing the format, said machine operating in successive printing cycles and each cycle being defined as one rotation of the printing cylinder

and involving the printing of one area of the web in the said format;

a first endless traction device and another endless traction device both located downstream of the printing cylinder for engaging and conveying the web independently of one another after it has travelled past the printing cylinder, said first endless traction device conveying the web forwards at a take-up speed which is at most equal to the printing speed and comprising a freely rotating web engaging sprocket device having a stop and a rotor which is continuously driven at the take-up speed, said rotor having a stop which drives the sprocket device by the contact

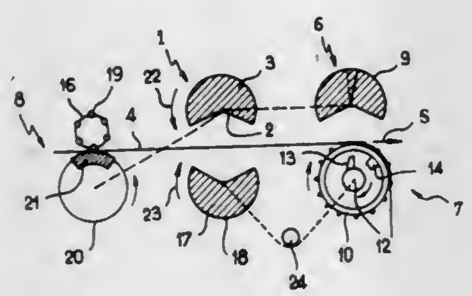

of its stop with the stop of the sprocket device whereby said sprocket device is free to intermittently rotate at a higher speed than the take-up speed but constrained to rotate at the take-up speed when its stop contacts the rotor stop, and said another endless traction device comprising a rotary member for intermittently conveying the web at the printing speed, in synchronisation with printing contact between said printing cylinder and the web; and

a device upstream of the printing cylinder for pulling the web backwards in order to re-absorb, during each printing cycle, any excess web length resulting from a difference between conveying at the printing speed and conveying at the take-up speed.

4,372,207

INK FOUNTAIN DEVICES FOR USE IN PRINTING PRESS

Hideaki Toyoda, Tokyo, Japan, assignor to Komori Printing Machinery Co., Ltd., Japan

Filed Oct. 2, 1981, Ser. No. 307,854

Claims priority, application Japan, Mar. 10, 1981, 56-34304; Mar. 10, 1981, 56-34305

Int. Cl.³ B41F *31/04, 31/06*

U.S. Cl. 101—365 **6 Claims**

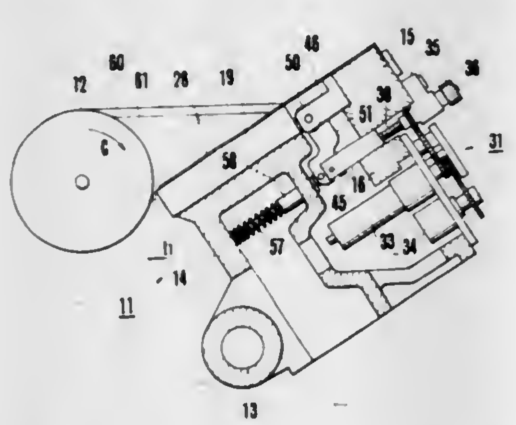

1. An ink fountain device for use in a printing press comprising:

an ink fountain roller dipped in an ink pot;

a blade support;

a plurality of divided blades juxtaposed on said blade support to be movable toward and away from a periphery of said ink fountain roller;

first spring means for urging said divided blades to move away from said ink fountain roller towards a plurality of brackets secured to said blade support;

a plurality of adjusting levers respectively pivotably mounted on said brackets;

a plurality of rollers supported by said brackets with their peripheries engaged with rear ends of respective divided blades;

a plurality of sliding members supported by said blade support to reciprocate in the same directions as said divided blades and respectively provided with screw threads;

means for operatively connecting said adjusting levers with respective sliding members;

a plurality of a adjusting screws respectively mating with said screw threaded of said sliding members; and

second spring means for urging said sliding members to cause to swing said adjusting levers so as to cause said rollers to move said divided blades toward said ink fountain roller.

4,372,208

DEVICE FOR SUPPLYING WITH INK PRINTING APPARATUS FOR CIGARETTE-MAKING MACHINES

Andre Legardinier, Plessis-Bouchard, France, assignor to Decoufle S.A.R.L., Paris, France

Filed Apr. 1, 1981, Ser. No. 249,913

Claims priority, application France, Apr. 1, 1980, 80 07314

Int. Cl.³ B41F *31/08*

U.S. Cl. 101—366 **3 Claims**

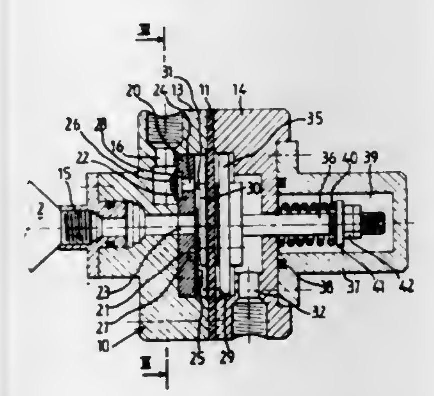

1. An inking device for a printer of a cigarette making machine comprising a diaphragm pump including a pair of casing members having a membrane secured therebetween, one of said casing members having an inlet bore and an outlet bore, an ink containing tube secured in said inlet bore, a flexible conduit having one end secured to said outlet bore and the other end to said printer, a plate positioned in said one of said casing members in spaced parallel relation to said membrane and defining therewith a chamber, said plate having a first orifice therein communicating with said inlet bore and said chamber and a second orifice communicating with said chamber and said outlet bore, valve members secured to opposite faces of said plate for controlling said orifices and the flow of ink to and from said chamber with respect to said bores, said second casing member having a piston and piston rod therein, said piston secured to said membrane, said inlet bore and said first orifice and said piston rod being positioned on a common axis with the axis of said outlet bore being disposed in a plane normal to said common axis, a bore in said second casing member connected to a source of compressed air for moving said piston and membrane towards said plate and a return spring connected to said piston rod.

4,372,209

SHEET GRIPPING JAR ARRANGEMENT

Arndt Jentzsch, Coswig; Hans Johne, Radebeul; Victor Hefftler, Coswig; Werner Kühnert, Radebeul, and Reiner Karl, Coswig, all of German Democratic Rep., assignors to Veb Kombinat Polygraph "Werner Lamberz", Leipzig, German Democratic Rep.

Filed Oct. 14, 1981, Ser. No. 311,294

Claims priority, application German Democratic Rep., Nov. 17, 1980, 225240

Int. Cl.³ B41F *21/04*

U.S. Cl. 101—409 **9 Claims**

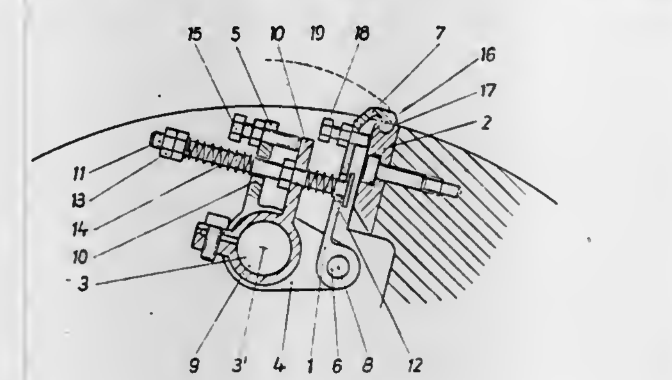

1. A sheet gripping arrangement of a rotary printing machine, comprising a sheet gripper abutment member; a soft gripper seat member; a gripper shaft having a gripper shaft pivot point; a sheet gripping element including a gripper finger cooperating with said gripper seat member and eccentrically pivotable relative to said gripper shaft about a gripper finger pivot point so as to move first over a substantially flat gripping path and then to move during its final movement phase normally to the latter; and a threaded abutment member arranged in said finger member and acting against said sheet gripper abutment member to have a contact point with the latter, said gripper finger being arranged at an angle of substantially 90° to said contact point of said threaded abutment member, said gripper finger pivot point, and said gripper shaft pivot point.

4,372,210

PYROTECHNIC CAP WITH MECHANICALLY DESENSITIZED COMPOSITION

John W. Shaffer, and Thomas L. Gavenonis, both of Williamsport, Pa., assignors to GTE Products Corporation, Stamford, Conn.

Filed Jan. 10, 1979, Ser. No. 2,264

Int. Cl.³ C06C *7/00*

U.S. Cl. 102—204 **4 Claims**

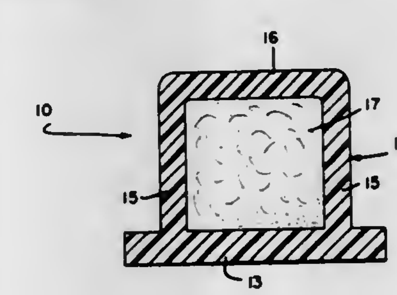

1. In a pyrotechnic cap for providing an audible signal of high intensity upon receipt of energy in the form of light and-/or heat from a flashlamp wherein said cap includes a plastic container having a pyrotechnic composition hermetically sealed therein separately from said flashlamp, the improvement wherein said pyrotechnic composition comprises a powdered mixture of a quantity of pyrotechnic material and a predetermined quantity of a low density, nontoxic desensitizing material having soft, readily distortable particles, the size of said particles being equal to or less than the size of the particles of said pyrotechnic material, said desensitizing material desensitizing said pyrotechnic cap against ignition by application of mechanical force thereto and not against ignition by said light and/or heat from said flashlamp.

4,372,211

THERMOELECTRIC POWER SUPPLY FOR WARHEADS

James G. Dante, Churchville, Md., assignor to The United States of America as represented by the Secretary of the Army, Washington, D.C.

Filed Apr. 14, 1980, Ser. No. 140,029

Int. Cl.³ F42C *11/00;* **H01L** *35/14*

U.S. Cl. 102—207 **10 Claims**

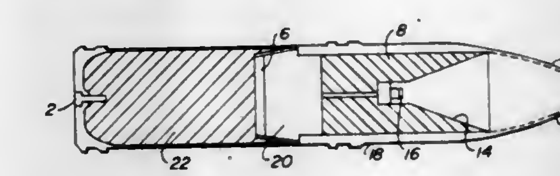

1. In a round assembly having a propellant, an igniter for activating said propellant, explosive material, and a detonator for activating said explosive material, a fuze comprising:

(a) an impact sensor for sensing impact of said round assembly, which includes;

a triboluminescent material coated on the inside surface of an ogive contained within said round assembly;

(b) a thermoelectric power supply comprising a plurality of junction means coupled to said propellant for sensing said propellant temperature, and voltage generating means in response to temperature sensed by said junction means, including;

storage means for storing said voltage generated by said thermoelectric power supply, and

(c) means responsive to said impact sensor and communicating with said detonator so as to cause the detonator to activate and detonate the explosive.

4,372,212

COMPOSITE SAFE AND ARMING MECHANISM FOR GUIDED MISSILE

Warren R. Hoelzen, Ontario; John F. Prescott, and Michael N. Tyler, both of Lake Isabella, all of Calif., assignors to The United States of America as represented by the Secretary of the Navy, Washington, D.C.

Filed Nov. 24, 1980, Ser. No. 209,574

Int. Cl.³ F42C *5/00, 15/06*

U.S. Cl. 102—264 **8 Claims**

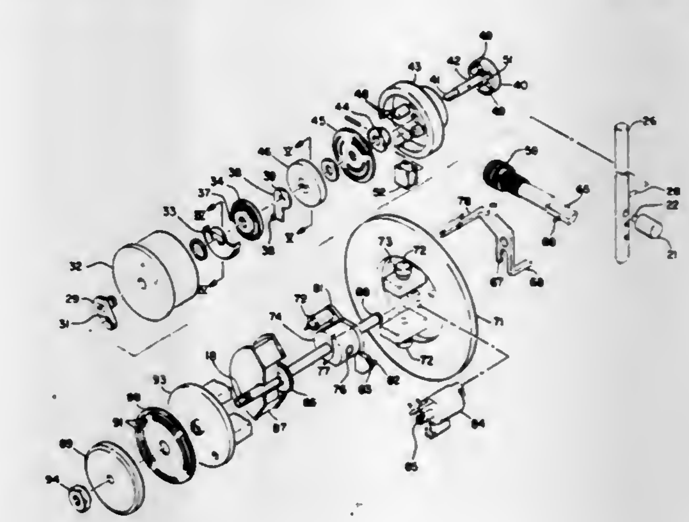

1. A composite safing and arming mechanism for a missile launched from an aircraft having a warhead; and a rocket motor, said mechanism comprising:

a mechanism casing connected between said rocket motor and said warhead;

a port in said mechanism casing communicating with said rocket motor for allowing pressure therefrom to enter said casing;
means for receiving an initial signal from said aircraft attached to said mechanism casing;
means for initiating the rocket motor after a predetermined time attached to said casing adjacent the rocket motor; and
means for arming the warhead attached to said mechanism casing after receiving a predetermined amount of pressure through said port from said rocket motor.

4,372,213
MOLTEN METAL-LIQUID EXPLOSIVE METHOD
Alexander G. Rozner, Potomac, and Horace H. Helms, Silver Spring, both of Md., assignors to The United States of America as represented by the Secretary of the Navy, Washington, D.C.
Division of Ser. No. 28,478, Apr. 9, 1979, Pat. No. 4,280,409. This application Mar. 30, 1981, Ser. No. 249,046
Int. Cl.^{3} C06D *5/00*
U.S. Cl. 102—301 **10 Claims**

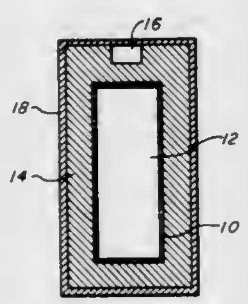

1. A method of causing an explosion comprising the following steps in order:
A. Placing a thermal device in a confined space which is filled with a liquid which consists essentially of water, wherein the thermal device comprises
(1) pyrotechnic material comprising a mixture of powders of
(a) nickel,
(b) metal oxide,
(c) an aluminum containing component selected from the group consisting of (i) aluminum and (ii) a mixture of from 50 to less than 100 weight percent of aluminum and from more than zero to 50 weight percent of a metal selected from the group consisting of magnesium, zirconium, bismuth, beryllium, boron, tantalum, copper, silver, niobium, tungsten, and mixtures thereof;
(2) means for igniting the pyrotechnic material; and
(3) a case enclosing the pyrotechnic material and the ignition means, wherein the case is composed of a metal selected from the group consisting of aluminum, magnesium, copper, and brass; and
B. igniting the pyrotechnic material of the thermal device to cause the explosion in the confined space.

4,372,214
EXPLOSIVE AUTO-ENHANCEMENT DEVICE
Edward T. Toton, Columbia, and Elihu Zimet, Silver Spring, both of Md., assignors to The United States of America as represented by the Secretary of the Navy, Washington, D.C.
Filed Sep. 8, 1980, Ser. No. 185,076
Int. Cl.^{3} F42B *1/00*
U.S. Cl. 102—305 **12 Claims**

1. A device for enhancing the detonation wave pressure and detonation wave velocity in an explosive charge, comprising:
elongate means defining an armature and supporting an elongate explosive charge generally coextensive therein, said supporting means being electrically conducting;
means forming a magnetic field surrounding the elongate supporting means, said magnetic field forming means being directly electrically connected to the supporting means at a first end thereof;
said elongate supporting means having its other end disposed in close proximity to the means forming the magnetic field to define a crowbar switch therebetween; and
means at the other end of the elongate supporting means for initiating the explosive charge, the detonation wave of which travels toward the first end;

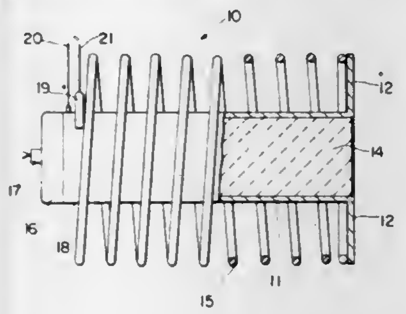

whereby, upon initial minimal expansion of the elongate supporting means at its other end, the crowbar switch is closed to complete a circuit between the electrically conductive supporting means and means forming the magnetic field so that expansion of the supporting means is opposed by the magnetic field and the explosive charge is precompressed ahead of the detonation wave thus increasing the detonation wave velocity as it travels along the explosive charge.

4,372,215
PROCESS AND APPARATUS FOR TRANSPORTING AND DROPPING A PLURALITY OF CHARGES CONTAINED IN A SINGLE CONTAINER AND CONTAINER EQUIPPED WITH SUCH AN APPARATUS
Roger Crepin, Paris, France, assignor to Thomson-Brandt, Paris, France
Filed May 20, 1980, Ser. No. 151,669
Claims priority, application France, May 13, 1980, 79 13201
Int. Cl.^{3} F42B *25/02*
U.S. Cl. 102—387 **16 Claims**

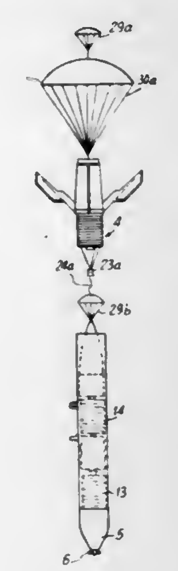

1. Device for transporting and releasing a plurality of charges engaged on a vehicle by the engagement of a lug of said vehicle and suspension means of said charges, said charges contained in a single container comprising a shell, a nosecone-shaped forward point, and a back cover, said device comprising: a plurality of modules, assembled longitudinally in the shell from front to back, each of said modules including extraction means capable of extracting said modules one by one, upon command by control means, through the rear of the shell, said modules each consisting of a cylindrical body containing a charge; and control and release safety means preventing issuance of release and operation commands to the modules as long as said means suspending the container to said lug of said vehicle are not released.

4,372,216
DISPENSING SYSTEM FOR USE ON A CARRIER MISSILE FOR REARWARD EJECTION OF SUBMISSILES
George T. Pinson, and Alex B. Hunter, both of Huntsville, Ala., assignors to The Boeing Company, Seattle, Wash.
Filed Dec. 26, 1979, Ser. No. 107,023
Int. Cl.^{3} F42B *13/50, 25/16*
U.S. Cl. 102—489 **10 Claims**

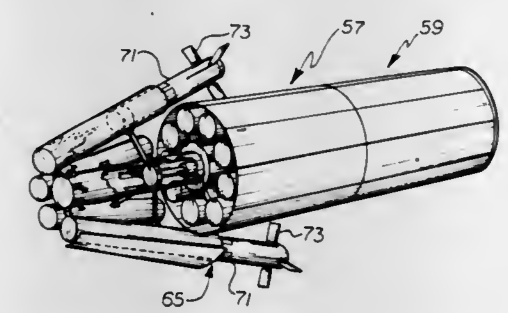

1. An apparatus for ejecting submissiles from a carrier missile, comprising:
at least one launch tube means adapted to carry a submissile;
a support means;
first pivot means, connecting one end of said launch tube means to said support means;
actuator means which moves between a start position and an extended position;
lever means rotatably connected between said actuator means and the other end of said launch tube means; and
means for moving said actuator means between said start position and said extended position such that when said actuator means is in the start position, said launch tube means is in a stowed position, and when said actuator means is in the extended position, said launch tube means is in a position to eject the submissile therein.

4,372,217
DOUBLE RAMP DISCARDING SABOT
Richard D. Kirkendall, Havre de Grace; William H. Drysdale, Aberdeen; Louise D. Kokinakis, Fallston, and Bruce P. Burns, Churchville, all of Md., assignors to The United States of America as represented by the Secretary of the Army, Washington, D.C.
Division of Ser. No. 29,188, Apr. 12, 1979, Pat. No. 4,284,008. This application May 12, 1980, Ser. No. 148,889
Int. Cl.^{3} F42B *13/16*
U.S. Cl. 102—521 **5 Claims**

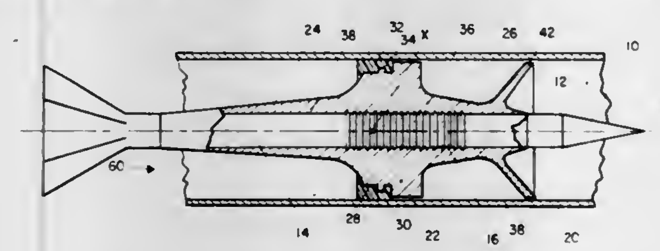

1. A double ramp discarding saboted projectile which comprises:
a subcaliber projectile having a cylindrically shaped fore-body section, a cylindrically shaped aft body section, an externally grooved central body section disposed intermediate said fore and aft body sections, and a longitudinal axis;
a gun tube having a longitudinal axis in axial alignment with said longitudinal axis of said saboted projectile, said gun tube adapted for slidably supporting said saboted projectile therein during launch;
sabot means operatively connected to said subcaliber projectile for preventing premature propellant gas leakage through said sabot means and through interface surfaces between said sabot means and said subcaliber projectile, for propelling said saboted projectile through said gun tube with increased velocity, for obtaining uniform shear traction between the interface of said sabot means and said subcaliber projectile, and for initial guidance of said saboted projectile through said gun tube which includes;
a plurality of double ramp sabot segments, each of said segments having an aft tapered ramp section having an internal cylindrical interface surface which mates with said aft body section of said subcaliber projectile, a forward tapered ramp section having an internal cylindrical interface surface which mates with said forward body section of said subcaliber projectile, an internally concentric traction groove section which mates with said grooved central body section of said subcaliber projectile, and borerider means for performing initial guidance during early motion of said subcaliber projectile through said gun tube, said borerider means includes a conical shell member extending from a forward end of said forward tapered ramp section; and
obturating band means fixedly connected to said sabot means and slidably disposed intermediate said sabot means and said gun tube, said band means positioned over the total in-bore center of gravity of said saboted projectile, for reducing the magnitude of transverse moments applied to said saboted projectile by yawing motions, for balancing said saboted projectile during in-bore travel through said gun tube, and for preventing leakage of propellant gases between said sabot means and said gun tube, said sabot means and said band means cooperating to eject said subcaliber projectile from said gun tube with improved leathality and range.

4,372,218
TRANSPORTATION INSTALLATION
Roland J. A. Östlund, Limmared, Sweden, assignor to Jobmatic, Inc., Bellevue, Wash.
Continuation of Ser. No. 677,738, Apr. 16, 1976, abandoned. This application Aug. 2, 1977, Ser. No. 821,076
Claims priority, application Sweden, Nov. 12, 1975, 7512683
Int. Cl.^{3} B61J *3/00*
U.S. Cl. 104—88 **8 Claims**

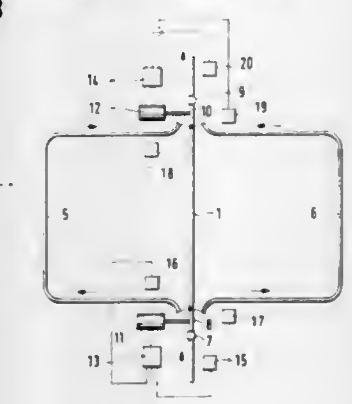

1. A conveyor system for serving a plurality of processing stations arranged in a plurality of substantially parallel rows, comprising
a plurality of trolley carriages,
an overhead main conveyor comprising a monorail track for said trolley carriages, said track forming a loop having a pair of substantially parallel sides along which the rows of processing stations are distributed, and means for propelling the trolley carriages along said track, said propelling means including a cable or chain slidably supported in guide means provided along said track above the same and

having depending dog members for engaging said trolley carriages,

a plurality of side conveyors coordinated with said processing stations, each of said side conveyors comprising a loop shaped overhead monorail track, each of said substantially parallel sides of the main conveyor being associated with one group of side conveyors to the right of said side and another group of side conveyors to the left of said side, and,

switch means for selectively connecting said side conveyors to the main conveyor, said switch means including, for each of said side conveyors, first switch means arranged in a first position to lead a trolley carriage along the main conveyor and in a second position to deviate a trolley carriage from the main conveyor to one end of a side conveyor, and second switch means for connecting the other end of the side conveyor to the same side of the main conveyor as said first switch means.

4,372,219

MATERIAL HANDLING SYSTEM

James W. Gibbs, Hialeah, Fla., assignor to Gibbs-Ryder Materials Handling Systems, Inc., Coral Gables, Fla.

PCT No. PCT/US79/00730, § 371 Date May 22, 1980, § 102(e) Date May 22, 1980, PCT Pub. No. WO80/00690, PCT Pub. Date Apr. 17, 1980

Continuation-in-part of Ser. No. 945,056, Sep. 22, 1978. This PCT application Sep. 17, 1979, Ser. No. 261,128

Int. Cl.³ B61B *13/02*

U.S. Cl. 104—165 41 Claims

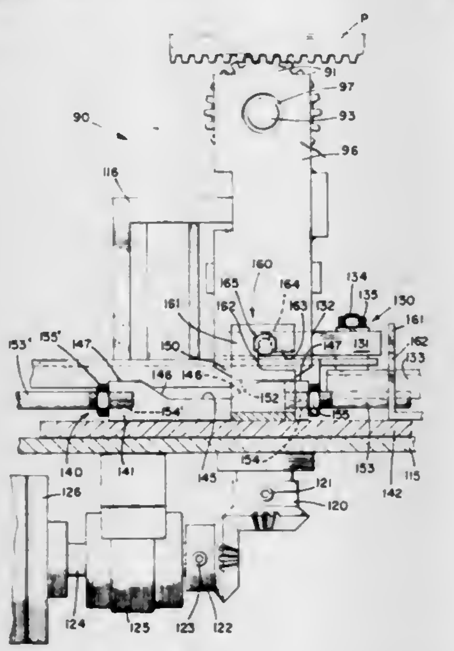

1. Material handling apparatus for the controlled movement of goods comprising, two intersecting rail means, pallet means for supporting the goods, wheel means mounted on said pallet means for engaging said intersecting rail means, movable track section means in said intersecting rail means underlying said wheel means, means for selectively moving said movable track section means to permit movement of said pallet means in two angular directions, and drive means engaging said pallet means for selectively moving said pallet means along either of said two intersecting rail means, said drive means including drive direction control means for orienting a pinion to drive said pallet means along either of said two intersecting rail means and including direction control locking means for locking said pinion in position to drive said pallet means along either of said two intersecting rail means, said direction control locking means including lock plates having a cutout and said pinion being mounted on a shaft mounted on a yoke, said yoke having a lock pin engaging said cutout in said lock plates.

4,372,220

MOTOR VEHICLE FOR USE ON ROADS AND RAILWAYS

Lucio Sechi, Tricesimo, Italy, assignor to Danieli & C. Officine Meccaniche S.p.A., Buttrio, Italy

Filed Jul. 28, 1980, Ser. No. 172,666

Claims priority, application Italy, Jul. 27, 1979, 83428 A/79

Int. Cl.³ B61C *11/00;* B61F *13/00*

U.S. Cl. 105—215 C 4 Claims

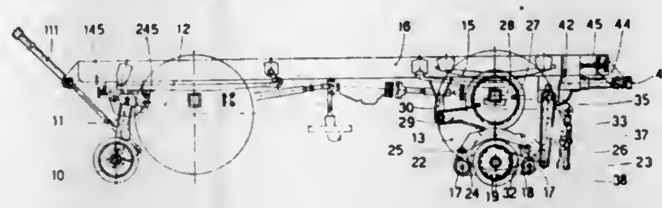

1. Motor vehicle for use on roads and railways comprising: driving tired road wheels; rail wheels temporarily positionable at least partially below the said road wheels, at least some of said rail wheels being driven in this temporary position by said road wheels; temporary positioning means provided for the said rail wheels; said positioning means consist of two jacks the first jack being for putting the driven rail wheels into the temporary working position and for the temporary transitory displacement of the said driven rail wheels, and the second jack being for putting the same unit of the driven wheels and first jack into the temporary disengaged position; a first lever; an axle integral with said first lever; a sleeve external to said axle and sustaining means anchored to said external sleeve, said first jack acting on said lever and being sustained by said means.

4,372,221

FOLDING PALLET

Herbert V. White, Borger, Tex., assignor to J. M. Huber Corporation, Locust, N.J.

Filed Mar. 31, 1980, Ser. No. 135,411

Int. Cl.³ B65D *19/20*

U.S. Cl. 108—51.3 9 Claims

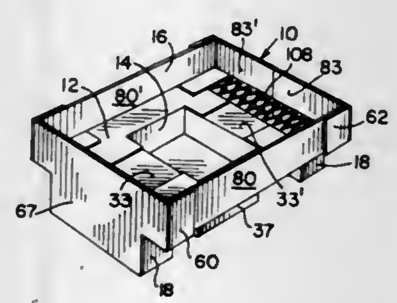

1. A pallet structure for supporting articles so as to facilitate handling and transporting by a fork lift truck which pallet structure is formed from a cut and scored blank of relatively heavy weight paperboard, or like foldable sheet material, said structure comprising an article supporting platform arrangement having a central portion thereof depressed so as to provide a pocket-forming, article-accommodating recess which is defined by a sidewall structure and a bottom wall structure, said sidewall structure comprising panels depending from the plane of the surrounding platform area to the perimeter of said bottom wall structure, which bottom wall structure is disposed in a plane a substantial distance below the bottom face of the surrounding platform area and said sidewall structure being spaced inwardly of the outermost edges of said platform structure on all sides a sufficient distance to permit the arms of a fork lift to be inserted from any adjoining sides of the pallet so as to engage in supporting relation beneath the platform while the bottom wall of the recess is resting on a supporting surface at a level below the bottom face of the platform, said platform arrangement including an upstanding rim forming arrangement at its outer edges.

4,372,222

SCREW AND FLOATING DRIVE NUT ASSEMBLY

Larry E. Tice, Harrisburg, N.C., assignor to Colt Industries Operating Corp., West Hartford, Conn.

Filed Oct. 6, 1980, Ser. No. 194,459

Int. Cl.³ A47B *13/00;* F16H *1/18*

U.S. Cl. 108—137 4 Claims

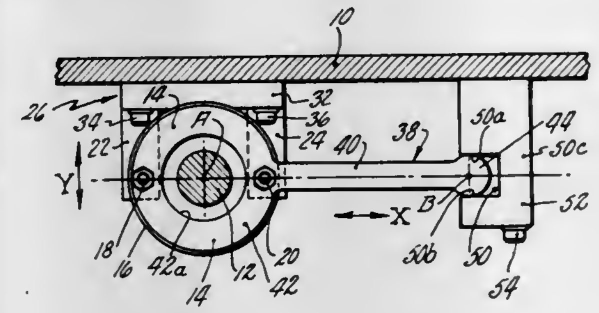

1. In a precision screw assembly adapted to position table of the type having a screw and a ball nut in threaded engagement with the screw, the improvement comprising:

a rod connected to and extending from the ball nut in parallel relationship to the screw;

a first bracket mounted on the table and fixedly connected to the rod such that motion of the ball nut is transmitted to the table;

an arm connected to and radially extending from the nut;

a second bracket mounted on the table; and

the arm being anchored to the second bracket for pivoting movement with respect to the bracket about an axis generally parallel to the axis of the screw and for axial movement with respect to the second mentioned bracket such that the nut is prevented from rotating about its axis but is free to move sidewise and vertically.

4,372,223

MOVING TABLE ASSEMBLY

Nobuo Iwatani, Fujisawa, Japan, assignor to Nippon Seiko Kabushiki Kaisha, Tokyo, Japan

Filed Dec. 15, 1980, Ser. No. 216,259

Claims priority, application Japan, Dec. 20, 1979, 54-175621[U]; Feb. 6, 1980, 55-12899[U]

Int. Cl.³ A47B *1/00;* F16M *11/04*

U.S. Cl. 108—143 5 Claims

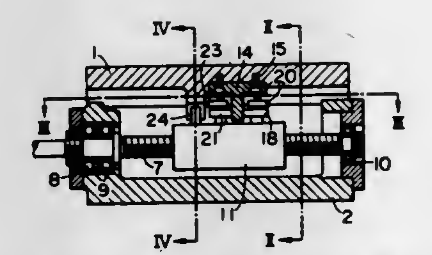

1. A moving table assembly having a table supported for movement in one direction, a feed screw having its axis parallel to the direction of movement of said table, a nut threadably engaged with said feed screw, and a connecting mechanism for connecting said table and said nut, said connecting mechanism comprising a first connecting portion for transmitting the axial displacement of said nut to said table and a second connecting portion for preventing said nut from rotating relative to the axis of said feed screw, said first connecting portion being provided with a guide member having a pair of guide surfaces provided on one of said table and said nut in orthogonal relationship with the axis of said feed screw, two support shafts corresponding to said guide surfaces respectively and secured to the other of said table and said nut, and two arms rockably provided on said support shafts respectively and having at the opposite ends thereof rotatable rollers engaging said guide surfaces, said rollers being pre-loaded against said guide surfaces by resilient deformation of said arms.

4,372,224

KNOCKDOWN FURNITURE CONSTRUCTION

Richard A. Ehrlich, Culpepper, Va., assignor to Gary J. Knostman, Fulton, Tex., Trustee of Metro Manufacturing of Texas and Metro Retailing of Texas, Inc.

Filed Feb. 7, 1980, Ser. No. 119,557

Int. Cl.³ C08L *89/00*

U.S. Cl. 108—159 6 Claims

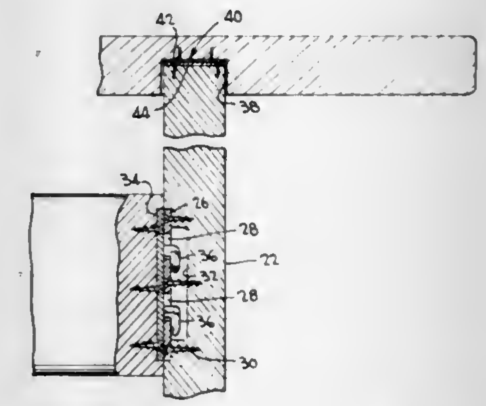

1. A knockdown furniture construction comprising:

a member having a generally rectangular configuration said member having a lower surface with a longitudinal recess formed at each end therof;

a pair of spaced apart generally I-shaped legs for supporting said member, each of said legs including an upper shoulder having a configuration mating with the configuration of said longitudinal recess at each end of said member for receivably mounting said upper shoulder therein; and,

separable fastener means for connecting said member with said legs including first and second complementary strips of gripping elements, said first strip of gripping elements being secured to said member within said longitudinal recess at a base thereof and said second strip of gripping elements being secured to said legs on an upper surface of said upper shoulder whereby said member can be sturdily but separably assembled with said legs when said second strip of gripping elements is in full face contact with said second strip of complementary gripping elements upon mating engagement of said upper shoulder with said longitudinal recess.

4,372,225

PANEL STRUCTURE FOR PUBLIC ENCLOSURES

Alain Tissot, 44 avenue de l'Abbaye, 77500 Chelles, and Claude Bourlier, 3, rue J.F. Belbeoch, 94410 St. Maurice, both of France

Filed Mar. 6, 1981, Ser. No. 241,239

Int. Cl.³ E06B *7/32*

U.S. Cl. 109—19 11 Claims

1. In a constructional element in particular for the equipment of premises used by the public for defining between the public and an officer isolated in another premises a transparent separating structure which however permits oral communication and exchanges of objects or documents, the element comprising a counter having a substantially horizontal upper part, an upper separating wall surmounting the counter, a major part of which wall is made from a transparent material and is inclined with respect to the vertical upwardly and toward the public premises side, the element having a part located below the upper substantially horizontal part of the counter, a lower wall closing said lower part, the improvement wherein, apart from

the upper part of the counter, the upper wall and the lower wall, the constructional element comprises only two spaced-apart lateral posts which are contained in vertical planes and have elongated and inclined upper parts, between which upper

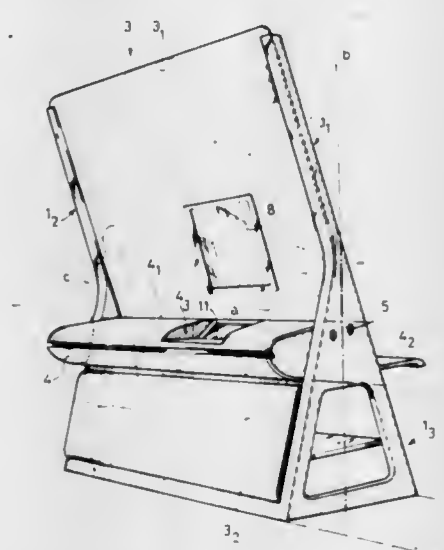

parts said upper wall is maintained, and wider lower parts which provide the element with a suitable supporting polygonal structure, the upper part of the counter and the lower wall being maintained between said lower parts.

4,372,226
LIQUID WASTE FEEDING SYSTEM FOR AN INCINERATOR
Kjell I. Eriandsson, Milwaukee, Wis., assignor to Kelley Company Inc., Milwaukee, Wis.
Filed Apr. 30, 1981, Ser. No. 258,993
Int. Cl.³ F23G *7/04*
U.S. Cl. 110—238 **18 Claims**

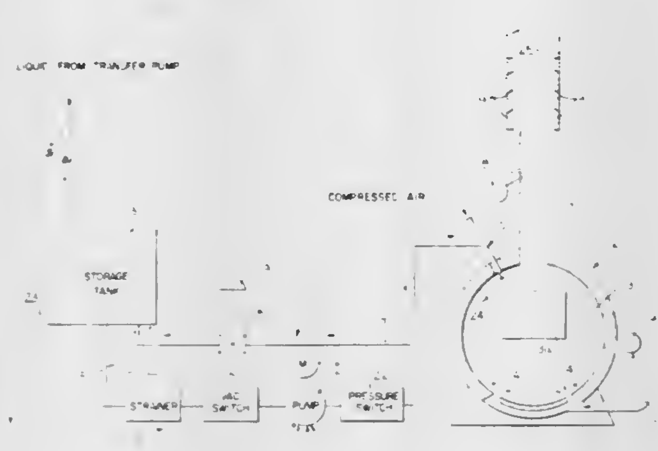

1. An incinerator system, comprising an incinerator defining a combustion chamber, means for supplying solid waste material to the combustion chamber, a stack connected to the combustion chamber to discharge waste gases of combustion generated through burning of said waste material, a liquid waste feed assembly mounted for movement with respect to the combustion chamber from a retracted position wherein said assembly is located outside of said combustion chamber to an extended feed position wherein the assembly is in communication with said chamber, operating means connected to said feed assembly for moving said feed assembly between said retracted position and said feed position, liquid waste supply means for supplying liquid to said liquid waste feed assembly when said feed assembly is in said feed position whereby the liquid waste will be introduced into the combustion chamber and combusted with said solid waste and, means responsive to a predetermined elevated stack temperature for actuating said operating means to move the liquid feed assembly from the retracted to the extended feed position.

4,372,227
METHOD OF REDUCING HIGH TEMPERATURE SLAGGING IN FURNACES
Dennis F. Mahoney, Three Bridges; Alfred E. Kober, Bridgewater, both of N.J., and Subhash H. Risbud, Champaign, Ill., assignors to Economics Laboratory Inc., St. Paul, Minn.
Filed Feb. 10, 1981, Ser. No. 233,064
Int. Cl.³ F23B *7/00;* **C10L** *9/02*
U.S. Cl. 110—342 **8 Claims**

1. A method of ameliorating high-temperature slagging conditions which results from impaction on the boiler interior surfaces of molten or semi-molten ash particles in a flue gas resulting from the combustion of fuel, which method comprises (a) at or upstream of the high-temperature region in said boiler system where slagging tends to occur, but downstream of the combustion region proper, adding to said flue gas a conditioner comprising one or more finely divided substances from the group consisting of silicon carbide and aluminum nitride, and (b) thereafter causing said mixed flue gas and conditioner to flow through said region, whereby the cooled ash has a predominantly crystalline characteristic.

4,372,228
FLUIDIZED BED REACTOR UTILIZING A CONICAL-SHAPED SUPPORT AND METHOD OF OPERATING THE REACTOR
Jakob Korenberg, York, Pa., assignor to York-Shipley, Inc., York, Pa.
Filed Dec. 5, 1980, Ser. No. 213,318
Int. Cl.³ F23D *1/00*
U.S. Cl. 110—347 **27 Claims**

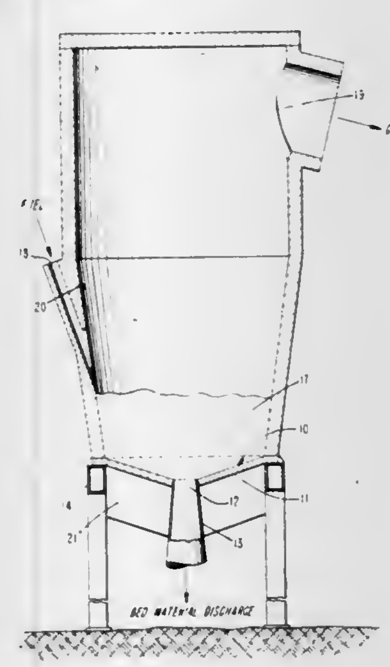

1. A bed support for use in a fluidized bed reactor comprising:

conduit means for removing tramp material and/or agglomerated material from the reactor;

conical-shaped support including downwardly converging surfaces terminating in said conduit means; and

main air source means extending from said downwardly converging surfaces and directing a net component of pressurized air parallel to and downwardly along said surfaces toward said conduit means both for fluidizing the bed and for preventing tramp material and/or agglomerated material from collecting on said downwardly converging surfaces.

4,372,229
RUNNER PLANTER MEANS
Marcus D. Henthorn, Rte. 1, Roachdale, Ind. 46172
Continuation-in-part of Ser. No. 123,300, Feb. 21, 1980, abandoned. This application Feb. 24, 1981, Ser. No. 237,633
Int. Cl.³ A01C *5/00*
U.S. Cl. 111—86 **1 Claim**

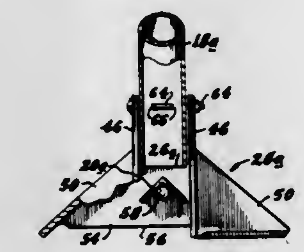

1. A planter runner assembly adapted to be attached to a planter, comprising a planter runner having a forwardly-located earth-parting component, and rearwardly thereof vertical side walls, which, when moved forwardly along the ground, provide between them a flat earth-shielded furrow into which seed is to be planted, and

a seed diverter means which is operative to distribute seed across the width of said furrow,

and a hood member formed to provide generally parallel side walls respectively attached to the vertical side walls of the planter runner, and earth-shielding walls extending transversely from the hood member's side walls, the said earth-shielding walls each diverging in a sloping manner outwardly and downwardly respectively from bottom edges of the hood member's side walls, and including a rearward cover means attached along the rear downwardly, rearwardly sloping edges of the said earth-shielding walls, said rearward cover means having a bottom transverse edge elevated above the lower edges of said earth-shielding walls and including means for mounting said seed diverter means,

whereby the combination of the earth-shielding transversely-extending walls and the rearward cover means shield the seeds being planted from earth falling into the furrow, generated by the forward movement of the planter, until the distribution of the seeds as spread by the seed diverter means has taken place.

4,372,230
PRESSER FOOT WITH CORDING ATTACHMENT
Heinrich K. Ciecior, Ettlingen, Fed. Rep. of Germany, assignor to Union Special G.m.b.H., Stuttgart, Fed. Rep. of Germany
Filed Jan. 26, 1981, Ser. No. 228,512
Claims priority, application Fed. Rep. of Germany, Feb. 1, 1980, 3003630
Int. Cl.³ D05B *29/12*
U.S. Cl. 112—139 **6 Claims**

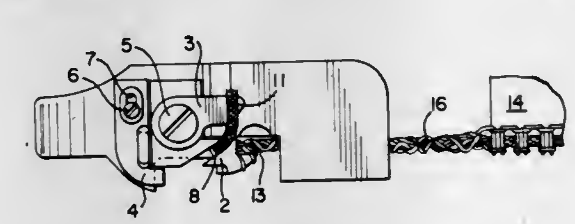

1. A cording presser foot for overedge sewing machines comprising:

work engaging sole plate means having a needle opening, a cord guiding channel arranged proximate to and in advance of the needle opening in the direction of sewing permitting a cord to be guided toward the needle opening, and an opening extending from one lateral side of the sole plate to the channel by a labyrinth.

4,372,231
BUTTONHOLE PADDLE SWITCH POSITION SENSING ARRANGEMENT IN A SEWING MACHINE
Charles R. Odermann, Montville, and John W. Wurst, Dover, both of N.J., assignors to The Singer Company, Stamford, Conn.
Filed Aug. 7, 1981, Ser. No. 290,892
Int. Cl.³ D05B *3/06, 3/02*
U.S. Cl. 112—158 B **7 Claims**

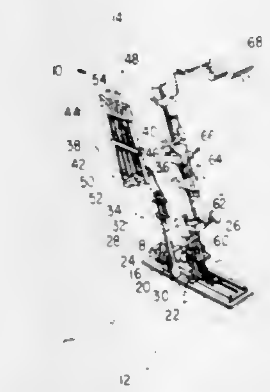

1. In a sewing machine having stitch forming instrumentalities positionally controlled over a predetermined range between stitches to produce a pattern of feed and bight controlled stitches, static memory means for storing pattern stitch information, means for selecting a pattern to be sewn, timing pulse generating means for generating timing pulses in synchronism with the operation of said sewing machine, means utilizing said timing pulses for recovering selected pattern stitch information from said static memory means, actuating means responsive to said pattern stitch information for influencing the feed and bight motions to produce a pattern of stitches corresponding to the selected pattern stitch information, a buttonhole presser foot including a button size gauging arrangement, a paddle switch adapted to cooperate with said button size gauging arrangement during the sewing of a buttonhole pattern so as to provide switching signals for forming an appropriate sized buttonhole, said paddle switch being selectively movable between a retracted non-operative position and an extended operative position, and inhibit means selectively operable for rendering inoperative at least one of the stitch forming instrumentalities, the improvement comprising:

signal generating means responsive to said paddle switch not being in its operative position when a buttonhole pattern is selected for generating a control signal; and

means responsive to said control signal for operating said inhibit means.

4,372,232
ELECTRONICALLY CONTROLLED SEWING MACHINE ARRANGED TO SEW THE MIRROR IMAGE OF A PATTERN IN THE FEEDING DIRECTION
William H. Dunn, Frankford Township, Sussex County, and Leonard I. Horey, West Orange, both of N.J., assignors to The Singer Company, Stamford, Conn.
Filed Mar. 31, 1982, Ser. No. 364,120
Int. Cl.³ D05B *3/02*
U.S. Cl. 112—158 E **3 Claims**

2. An electronically controlled sewing machine having stitch forming instrumentalities positionally controlled over a predetermined range between stitches to produce a pattern of feed and bight controlled stitches, means for storing pattern stitch information in an ordered sequence corresponding to the sequence of stitches within the pattern, the pattern stitch information for each stitch including separately identifiable bight and feed information, switch means actuatable by an operator to effect the sewing of the mirror image of the pattern in the feeding direction, and means responsive to actuation of said

switch means for sequencing through said pattern stitch information in the reverse order and wherein for each stitch in the

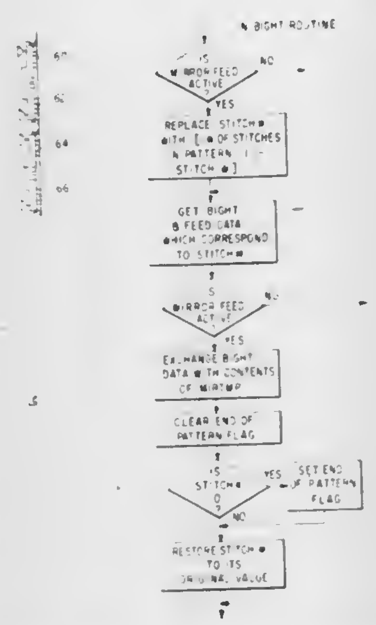

mirror image there is used the feed information for that stitch and the bight information for the succeeding stitch according to the original ordered sequence.

4,372,233

SAFETY GENERAL PURPOSE PRESSER FOOT FOR STRAIGHT AND ZIG ZAG STITCHING

Charles R. Odermann, Montville, N.J., assignor to The Singer Company, Stamford, Conn.

Filed Feb. 12, 1981, Ser. No. 233,799

Int. Cl.³ D05B *29/06*

U.S. Cl. 112—235 **4 Claims**

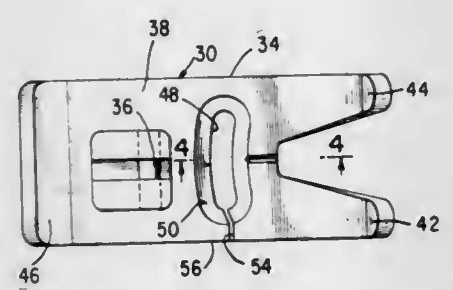

1. In a zig zag sewing machine, a needle bar to which a sewing instrumentality with a pair of laterally spaced needles may be secured, a pressure bar, and a presser foot attached to the presser bar, the needle bar having a basting position beyond a lateral zig zagging range, said presser foot including a sole plate with a lateral elongate opening defined so that upon descent of the needle bar from the basting position only the needle closest to a mid-line in the zig zagging range can pass through the opening without striking the sole plate, the opening having an upper beveled edge to interfere at one end of the opening with the other needle and deflect such other needle so that it can pass through the opening.

4,372,234

FRAME STRUCTURE FOR A BLINDSTITCH HEMMING MACHINE

Karl H. Killinger, Dover; Kenneth M. Johnson, Westfield, and Peter J. Totino, North Bergen, all of N.J., assignors to The Singer Company, Stamford, Conn.

Filed Dec. 14, 1981, Ser. No. 330,058

Int. Cl.³ D05B *77/00*

U.S. Cl. 112—258 **3 Claims**

1. A blindstitch sewing machine comprising: a two part frame including

a base portion and

a cover portion mating congruently therewith,

said base portion including a substantially planar floor, walls rising from at least the sides and rear of said floor, and a plurality of bosses rising from said floor for supporting blindstitching mechanism thereon,

said cover portion including a low section extending from one side to the other across the entire front of said cover portion, a high rear section, a sloping ramp section joining said front and rear sections, and walls depending from at least the sides and rear of said cover portion,

a throat plate carried at one side of the two part frame adjacent the low section of said cover portions and formed with an aperture for accommodating a work fabric

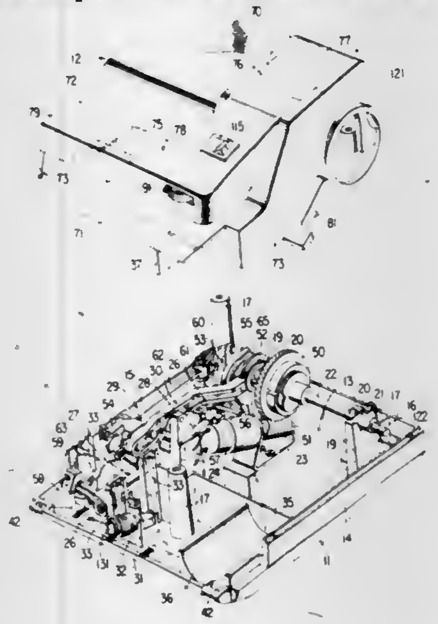

bight projecting herethrough into the path of blindstitch forming instrumentalities supported within said frame base portion,

a presser arm pivotally secured at the opposite side of the two part frame from the throat plate on the high rear section of said frame cover portion,

said presser arm projecting forwardly from said high rear section of said cover portion extending over said low section of said cover portion, and having a thickness dimension less than the difference in height of said low and said high cover portion sections,

a presser device carried by said presser arm for urging work fabrics against said throat plate, and a ridge former carried by said presser arm for projecting a bight of work fabric through said throat plate aperture.

4,372,235

THREAD MONITORING DEVICE

Viktor Principe, Romanshorn, Switzerland, assignor to Arthur Schmid AG, Romanshorn, Switzerland

Filed May 26, 1981, Ser. No. 267,020

Int. Cl.³ D05B *69/36*

U.S. Cl. 112—273 **5 Claims**

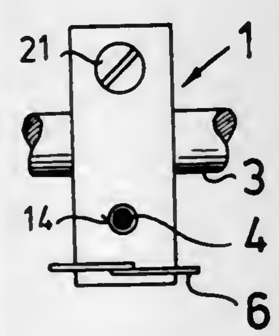

5. A thread monitoring device for a multineedle sewing machine comprising a plurality of flexible contact arms mounted on said machine, one for each thread to be monitored, and maintained in a first position by the tension of the monitored thread, said contact arm being spring urged toward a second position upon the absence of the monitor thread, said machine being equipped with a current carrying rail adjacent said second position, a holder movably mounted on said rail and adapted to be releasably fixed thereon in alignment with at least one contact arm, said holder having a conducting plate depending from said rail in the path of movement of said contact arm as said contact arm moves toward said second position, a contact strip on said conducting plate engageable by said contact arm when the same moves toward said second position, an electrical circuit operably associated with said machine including a current source connecting said contact arm and said contact strip through said rail, holder and conducting plate and including an illuminable diode mounted on said conducting plate adjacent said contact strip, said diode being illuminated when said contact arm contacts said contact strip to complete the electrical circuit whereby said holder can be selectively positioned on said rail in alignment with any selected contact arm to indicate breakage of a monitored thread associated with said selected contact arm.

4,372,236

THREAD CUTTING DEVICE FOR SEWING MACHINE

William E. Harrison, Henderson, N.C., assignor to Interco Incorporated, St. Louis, Mo.

Filed Oct. 7, 1981, Ser. No. 309,356

Int. Cl.³ D05B *65/02*

U.S. Cl. 112—291 **3 Claims**

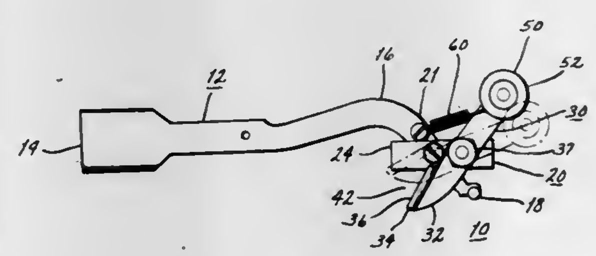

1. A thread cutting device for use in combination with a sewing machine pressure arm comprising:

a stationary, essentially horizontal blade fastened to said pressure arm and having a lower cutting edge;

a pivoting blade attached to said stationary blade, having a lower cutting edge that forms a cutting field with said stationary blade;

pressure means for causing said pivoting blade to move into a cutting relationship with said stationary blade; and

tensioning means for maintaining said blade in a non-cutting relationship.

4,372,237

TWO DIMENSIONAL FEED FOR MONOGRAM SEWING MACHINE

Peter J. Totino, North Bergen, and Donald R. Davidson, Berkeley Heights, both of N.J., assignors to The Singer Company, Stamford, Conn.

Filed Dec. 24, 1981, Ser. No. 334,194

Int. Cl.³ D05B *27/06, 27/20*

U.S. Cl. 112—308 **5 Claims**

1. A sewing machine having a work supporting surface, a work holding frame, guide means for constraining said work holding frame in translatory motion with respect to said work supporting surface, presser means and underbed feeding means, means for urging said presser means and said underbed feeding means each into simultaneous cooperative engagement with the work piece during selected time periods for feeding the work piece in forward and reverse directions, means for rendering said urging means ineffective for time periods other than said selected time periods, and transverse feeding means effective during said time periods other than said selected time periods for feeding the work piece in directions other than said forward and reverse directions.

2. A sewing machine having a work supporting surface, a

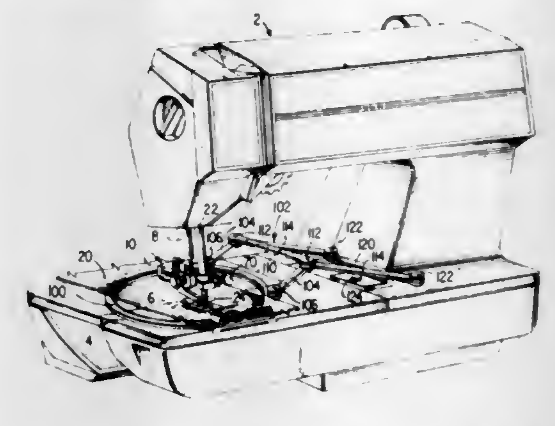

work holding frame for rigidly clamping the work piece while sewing, guide means for constraining said work holding frame in translatory motion with respect to said work supporting surface, and work feeding means for imparting longitudinal and transverse motion to said work holding frame through said work piece rigidly clamped therein during sewing.

4,372,238

TOY STITCHING SET

David J. Ciganko, East Aurora, N.Y., assignor to The Quaker Oats Company, Chicago, Ill.

Filed Jan. 12, 1981, Ser. No. 224,275

Int. Cl.³ D05C *17/00;* B03B *29/00*

U.S. Cl. 112—439 **6 Claims**

1. A toy stitching set comprising:

a rigid lattice plate having spaced perforations extending therethrough surrounded by lands to form a stitching grid wherein the width of each land between a pair of adjacent perforations is approximately 0.7 times the width of each perforation; and

a design of one or more colors imprinted on said lands whereby yarn matching the colors may be stitched to said grid to embroider said design.

4,372,239

UNDERSEA WEAPON WITH HYDROPULSE SYSTEM AND PERIODICAL SEAWATER ADMISSION

Allen C. Hagelberg, Diamond Bar; Clark E. Allardt, Claremont; Walter A. Lobitz, Westwood; Robert O. Thornburg, Blue Jay; George F. Zimmerman, Diamond Bar; Gary L. Letterman, Alta Loma, and John W. Helbron, Upland, all of Calif., assignors to General Dynamics, Pomona Division, Pomona, Calif.

Filed Mar. 3, 1980, Ser. No. 126,782
Int. Cl.[3] **F42B** *19/00*
U.S. Cl. 114—20 A **25 Claims**

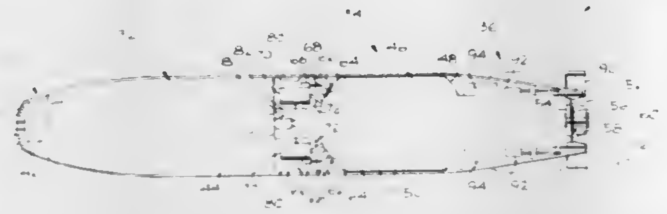

1. A weapon for destroying an underwater target comprising:
- a housing;
- a warhead mounted within the housing near the forward end thereof;
- means for steering the weapon under water in response to steering control signals;
- a hydropulse propulsion system including a chamber within the housing near the aft end thereof, a water jet nozzle projecting aft from the chamber, and means for periodically admitting sea water to the chamber and thereafter expelling the sea water through the nozzle with substantial force to develop thrust for propelling the weapon; and
- a dual sonar system for seeking and detecting an underwater target and for generating signals to control the steering means to direct the weapon toward the target, said system including separate target seeking and detecting means which are selectively operable during different time periods in directing the weapon toward the target.

4,372,240

SURFACE SHIP HAVING IMPROVED SPEED AND MANEUVERABILITY

Farid Y. Michael, Orange, Tex.

Filed Jul. 23, 1980, Ser. No. 171,575
Int. Cl.[3] **B63B** *1/00*
U.S. Cl. 114—56 **6 Claims**

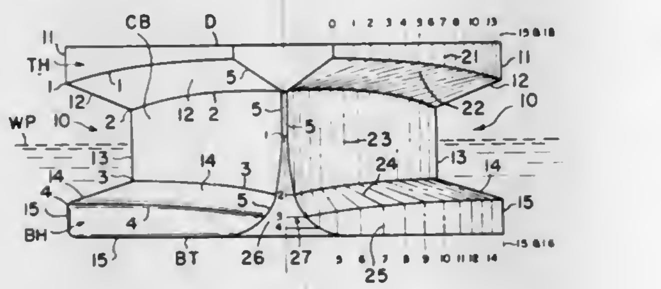

1. A fast single hull surface ship having a top deck, a bottom, a starboard side, and a port side, said sides being symmetrical relative to a vertical longitudinal plane of symmetry;
- said ship defining a bow section, a stern section, and a midbody section;
- said bow and stern sections each having a transverse end surface;
- said starboard and port sides, each having an outwardly protruding upper side hull, an outwardly protruding lower side hull, and a channel between said upper and lower side hulls, each of said upper and lower side hulls having in the bow and stern sections an external cylindrical side wall;
- in the bow and stern sections each of said channels having a recessed cylindrical wall which spans without interruption from the transverse end surface of the bow section up to the transverse end surface of the stern section, an upper inwardly-sloping side wall, and a lower outwardly-sloping side wall, the inwardly-sloping side wall having a conical portion whose area increases toward the end surface of the stern section, and whose area increases toward the bow section, and the outwardly-sloping side wall of said channel having a conical surface of reduced surface area up to the transverse end surface of the bow section and having a conical surface of reduced surface area up to the transverse end surface of the stern section.

4,372,241

RUDDER ASSEMBLY

William R. Tritt, 1145 Grove St., St. Petersburg, Fla. 33701

Filed Jan. 9, 1981, Ser. No. 223,728
Int. Cl.[3] **B63H** *25/06*
U.S. Cl. 114—162 **7 Claims**

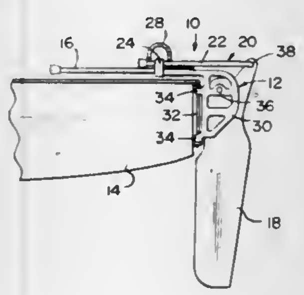

1. A rudder assembly for sailboats, and the like, comprising a rudder support frame pivotally attached to the stern portion of the boat, a tiller fixedly attached to the rudder support frame, said tiller being substantially horizontally disposed, a rudder blade pivotally coupled to the rudder support frame, a rudder blade control mechanism including kickup control arm pivotally coupled to said rudder blade and an interconnecting control member pivotally coupled between said kickup control arm and said tiller to selectively move said rudder blade between a first lower position, and second upper position by the pushing or pulling of said kickup control arm, said kickup control arm being substantially parallel to said substantially horizontal tiller when in said first or second position.

4,372,242

ASSEMBLY FOR TREATING VESSEL HULLS

Hans G. Lundberg, Löddeköpinge, Sweden, assignor to Marinkonsult Hans Lundberg AB, Trelleborg, Sweden

Division of Ser. No. 43,564, May 29, 1979, Pat. No. 4,279,212. This application Mar. 30, 1981, Ser. No. 248,749
Claims priority, application Sweden, Jun. 1, 1978, 780643
Int. Cl.[3] **B63B** *59/00*
U.S. Cl. 114—222 **11 Claims**

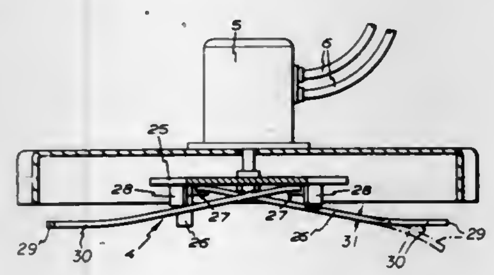

1. An assembly for treating an underwater surface of a fixed or floating construction such as, for example, a ship hull, the assembly having a frame which supports at least one motor-driven rotatable treatment device which is moveable into abutment against the construction surface to be treated, wherein at least one of the treatment devices is a scraper having an axis of rotation extending between opposite ends of the scraper and comprising:
- a holder which is disposed about the axis of rotation at one end of the scraper and which includes a plurality of supports oriented in an outward axial direction;

and
- a like plurality of radially-extending scraper vanes which are made of resiliently yieldable material and which are associated respectively with said supports, each scraper vane having one end connected to the holder, an opposite free end, and an intermediate working portion adjacent the free end for scraping the construction surface, each scraper vane abutting against its associated support intermediate its connected end and its working portion, and each scraper vane extending from its associated support to its free end in a radial direction and simultaneously in said axial direction;
- whereby when the scraper is moved in said axial direction into abutment against the construction surface, the free end of each scraper vane is compressed against the construction surface and the scraper vane resiliently yields, with its associated support acting as a fulcrum, to bring its working portion into abutment against the construction surface.

4,372,243

TOOL AND PARTS CATCHER FOR BOATS

John R. Roope, Jr., 6th and Grove Sts., Rehoboth Beach, Del. 19971

Continuation of Ser. No. 112,930, Jan. 17, 1980, abandoned. This application Jul. 17, 1981, Ser. No. 284,342
Int. Cl.[3] **B63B** *17/00*
U.S. Cl. 114—364 **1 Claim**

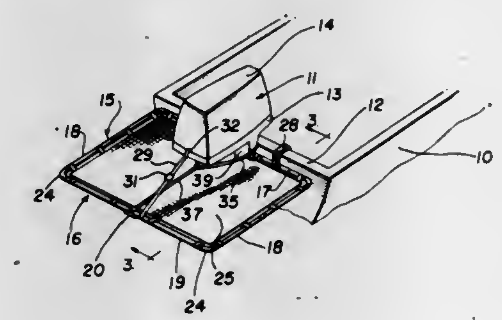

1. A device to prevent the loss of mechanics' tools by dropping into the water while repairing the motor of an outboard motorboat, the device comprising a frame including a pair of cooperative opposing generally C-shaped frame sections which define a generally rectangular frame when disposed in a common plane, the frame sections having parallel longitudinal side members and transverse rear members of equal lengths and the interior ends of the rear members being hingedly joined to permit folding the frame when not in use, the frame sections including foreshortened forward members having equal lengths whose inner ends are spaced apart sufficiently to straddle the sides of an outboard motor mounted on the transom of a boat to which the device is attached, a pair of suspension hooks for the device laterally adjustably mounted on said forward frame members and adapted to engage over the top of a boat transom on opposite sides of an outboard motor, at least one adjustable length flexible suspension element secured to one of said rear frame members and having a forward terminal element adapted for releasable connection with the frame of an outboard motor, whereby said device can be supported substantially horizontally immediately rearwardly of the transom of a boat, and a flexible barrier sheet adapted to intercept falling tools and the like and spanning substantially the rectangular area defined by said frame when the frame is in a use position, said barrier including a plurality of spaced suspension loops around its marginal edges and said loops being engaged with the side, rear and forward members of the frame to support the barrier sheet thereon in a generally taut state, the barrier sheet being divided at its front and transverse center between the forward frame members and said division of the barrier sheet extending longitudinally rearwardly to a point near the center of the barrier sheet, whereby the divided barrier sheet may straddle the descending portion of an outboard motor, and guide elements and a pair of flexible ties on the divided edge portions of the barrier sheet enabling the divided barrier sheet to be drawn snugly around said descending portion of an outboard motor.

4,372,244

VARNISHING UNITS ON PRINTING PRESSES

Herbert Rebel, Rodgau, Fed. Rep. of Germany, assignor to M.A.N.-ROLAND Druckmaschinen Aktiengesellschaft, Fed. Rep. of Germany

Filed Dec. 8, 1981, Ser. No. 328,531
Claims priority, application Fed. Rep. of Germany, Dec. 8, 1980, 3046257
Int. Cl.[3] **B05C** *1/16*
U.S. Cl. 118—46 **4 Claims**

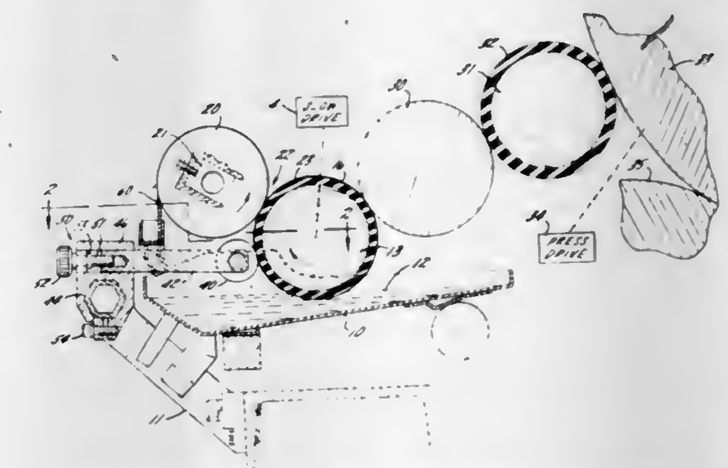

1. A varnishing unit for applying varnish in a strip of selected width on a sheet carried on the impression cylinder of a printing press comprising, in combination, a frame, a varnishing cylinder arranged for engagement with the sheet on the impression cylinder, a varnish trough, a resiliently surfaced fountain roller, driving means for slowly rotating the fountain roller in the varnish in the trough, a hard surfaced metering roller in rolling engagement with the fountain roller to form a metering nip, means for adjusting the degree of indentation of the metering roller upon the fountain roller thereby to determine the thickness of the film of varnish which clings to the fountain roller on the downstream side of the nip, a scraper blade on the metering roller on the downstream side of the nip for scraping off the varnish which clings to the metering roller for return thereof to the trough, a hard surfaced distributor roller in engagement with the fountain roller downstream of the nip for accepting the film of varnish, a resilient form roller in rolling engagement with the distributor roller for transferring the film to the varnishing cylinder, and a plurality of varnish blocking rollers arranged adjacent the fountain roller between the trough and the metering nip, the blocking rollers being hard-surfaced and of relatively small diameter, means including arms at the respective ends of each roller and secured to the frame for supporting the blocking rollers end to end so that each defines a region of width on the fountain roller for control of varnish flow, the arms having adjusting means for individual adjustment of each blocking roller between (a) a forcibly indented position on the surface of the fountain roller sufficient to substantially cut off the flow of varnish to the metering nip in the region of width controlled by the blocking roller and (b) a withdrawn position permitting passage of a strip of varnish in the controlled region to the metering nip and thence to the varnishing cylinder, the adjusting means at each

end of a blocking roller being differentially adjustable so that flow of varnish may be blocked off at one end of the blocking roller but not at the other thereby to achieve a varnish strip of a width which is less than the length of the blocking roller.

4,372,245
DEVICE FOR COATING INTERNAL THREADS OF A FASTENER
Colin Watson, Stillorgan, Ireland, and David J. Dunn, Twinsburg, Ohio, assignors to Loctite Corporation, Newington, Conn.
Filed Mar. 13, 1981, Ser. No. 243,517
Int. Cl.³ B05C *7/00, 5/02*
U.S. Cl. 118—56 **12 Claims**

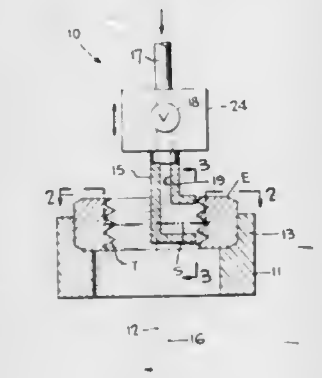

1. A device for applying a sealant to the threads of an element having a circular threaded opening, comprising a hollow sealant applicator having a central axis and a sealant discharge orifice lying at a predetermined radial distance from said axis, a rotatable base for holding the element and positioning same with its threads adjacent said orifice and for rotating the element about a central axis of the base lying parallel to and offset from said applicator axis, whereby a side force is induced in the direction of said discharge orifice during rotation of said base to effect a forced discharge of sealant from said orifice into the threads of the element.

4,372,246
EXTERNALLY HEATED FUSING MEMBER FOR ELECTROSTATOGRAPHIC COPIERS
Jack C. Azar, Rochester; Arnold W. Henry, Pittsford, and Robert M. Ferguson, Penfield, all of N.Y., assignors to Xerox Corporation, Stamford, Conn.
Filed May 4, 1981, Ser. No. 260,649
Int. Cl.³ B05C *11/00*
U.S. Cl. 118—60 **23 Claims**

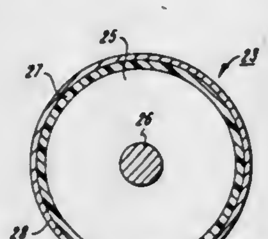

1. An externally heated fuser member for use in an electrostatographic copying machine for fusing toner images to substrates comprising:
a base;
a relatively thick layer of a foam of a fluoroelastomer on said base; and
a relatively thin layer of a silicone elastomer on said foam layer, said silicone elastomer having an iron oxide filler dispersed therein.

4,372,247
COLD PRESSURE FUSING APPARATUS
Richard A. Calabrese, Newtown, Conn., assignor to Pitney Bowes Inc., Stamford, Conn.
Continuation of Ser. No. 124,034, Feb. 25, 1980, abandoned. This application Dec. 21, 1981, Ser. No. 381,814
Int. Cl.³ B05C *1/08;* **G03G** *15/20*
U.S. Cl. 118—116 **5 Claims**

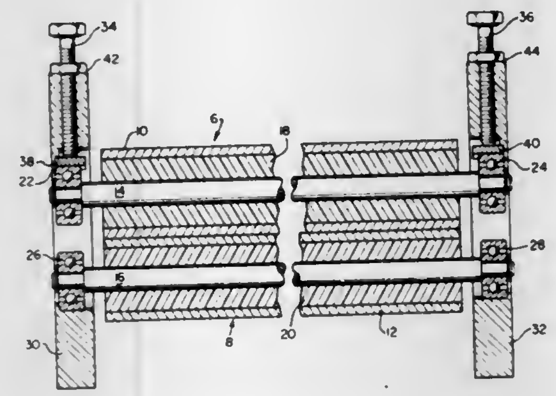

1. Fusing apparatus for fixing toner material to a copy sheet, comprising:
a pair of parallel, cold pressure fixing rollers, each of said rollers consisting of a cylindrical rigid metal tube open at both ends thereof, a cured elastomer occupying the volume enclosed by and bonded to said cylindrical tube, and a shaft extending through and bonded to said elastomer, said shaft being concentric with said tube; and
means for applying a force to one of the two roller shafts to thereby apply a uniform pressure to the nip of the cold pressure fixing rollers.

4,372,248
APPARATUS FOR ACCURATELY REGISTERING A MEMBER AND A SUBSTRATE IN AN INTERDEPENDENT RELATIONSHIP
Richard T. Martin, Goleta, Calif., assignor to Applied Magnetics-Magnetic Head Division Corporation, Goleta, Calif.
Filed Sep. 21, 1981, Ser. No. 304,066
Int. Cl.³ C23C *13/08*
U.S. Cl. 118—720 **9 Claims**

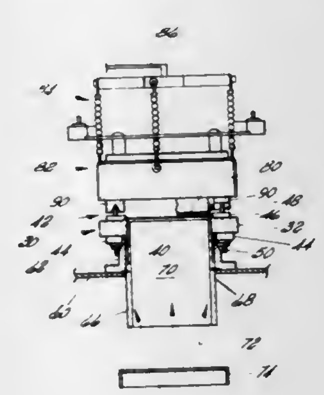

1. Apparatus for accurately registering a substrate to a stabilized mask for direct deposition of a thin film material onto the substrate through the stabilized mask having a thin film pattern formed therein, said apparatus comprising
a mask supporting apparatus including
a stabilized mask assembly having a dimensionally stabilized mask supporting frame having an opening extending through the center thereof and means defining a circumferentially extending surface around the periphery of a said opening on one side of the dimensionally stabilized mask supporting frame, said dimensionally stabilized mask supporting frame including means for defining a frame flange which supports said circumferentially extending surface;
a relatively thin, substantially planar mask formed of material having a predetermined yield strength and a selected geometrical shape and dimension, said mask being positioned adjacent said opening with the periphery thereof contiguous said circumferentially extending surface, said mask having a plurality of apertures extending therethrough and arranged in a predetermined array defining a thin film pattern;
means for rigidly affixing the periphery of said mask to the circumferentially extending surface with a radial tension applied to said mask, said radial tension having a magnitude which establishes a stress on the mask during use which is less than the predetermined yield strength of a said mask when said mask is used over a temperature range of a deposition process including operating temperatures of a deposition and being adapted to maintain sufficient magnitude to keep the mask under tension independent of variations in radial tension due to the thermal expansion characteristics of the mask to dimensionally stabilize said thin film pattern at a said operating temperature of a said deposition environment;
three prealigned registration members mounted on the frame flange of said dimensionally stabilized mask supporting frame in a predetermined pattern, a selected one of said prealigned registration members including a first adjusting means and an alignment pin and being adapted to move said alignment pin to a primary reference point in a selected plane and a selected second one of said prealignment members include a second adjusting means and an alignment pin and being adapted to move its associated alignment pin to a secondary reference line segment which excludes said primary reference point and which is located in said selected plane; and
gantry means including a substrate holding means for supporting a substrate in a predetermined relationship to a said source, said gantry means including reference registration members which are located thereon in substantially said predetermined pattern and which are adapted to co-act with the prealigned registration members for accurately registering a said substrate in a precise position relative to said mask supported by said dimensionally stabilized mask supporting frame, said reference registration members including receiving members each of which is adapted to receive and co-act with a selected one of said alignment pin of said prealigned registration members to insure that a said substrate is accurately registered relative to the mask rigidly affixed to said dimensionally stabilized mask supporting frame.

4,372,249
VOLUMETRIC APPARATUS FOR MILK AND METHOD OF MEASURING THE TOTAL QUANTITY OF MILK COLLECTED FROM A COW IN MILKING
Philippus P. Kiestra, Twijzel, Netherlands, and Christian Icking, Oelde, Fed. Rep. of Germany, assignors to Westfalia Separator AG, Oelde Westfalen, Fed. Rep. of Germany
Filed May 22, 1981, Ser. No. 266,036
Claims priority, application Fed. Rep. of Germany, May 28, 1980, 3020161
Int. Cl.³ A01J *9/00*
U.S. Cl. 119—14.17 **11 Claims**

1. In a device for directly measuring the quantity of milk obtained from a cow being milked by a mechanical milking apparatus, the device having a vacuum separating chamber receptive of a milk-air mixture from a cow for separating the milk from the air, a milk measuring chamber downstream of the separation chamber and having an outlet at the bottom thereof, means providing liquid communication between the separating and measuring chambers, means for sensing at least one liquid level in the measuring chamber and valve means for opening and closing the measuring chamber outlet in response to the liquid level sensed by the sensing means, the improvement wherein the means providing liquid communication between the separating and measuring chamber comprises a constantly open inlet aperture permitting a continuous flow of

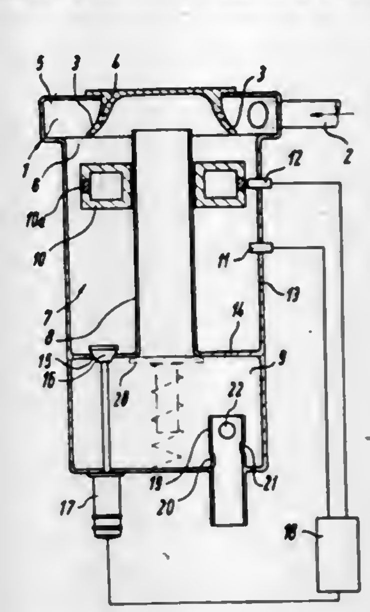

milk from the separating chamber and further comprising means for making partial-quantity measurements of the milk during the flow of milk into the measuring chamber.

4,372,250
MILKING INFLATION
Leigh R. Larson, Johnson Creek, Wis., assignor to Hi-Life Rubber, Inc., Johnson Creek, Wis.
Filed Jul. 16, 1981, Ser. No. 280,454
Int. Cl.³ A01J *5/04*
U.S. Cl. 119—14.47 **5 Claims**

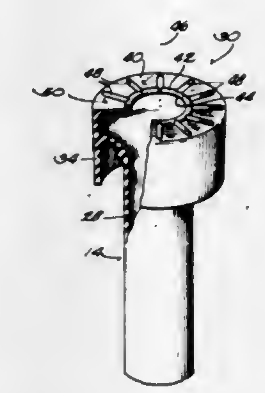

1. A milking inflation for a teat cup assembly, said inflation being made from a elastomeric material, having a tubular body and having a head end portion adapted to fit over the upper end of a teat cup shell terminating in a upper rim, said head end portion including
(a) a peripheral cuff adapted to surround and sealingly engage the upper rim of the shell;
(b) a substantially flat web section extending radially inwardly from said cuff substantially perpendicularly to the longitudinal axis of the tubular body and terminating in a raised, rounded bead which defines a circular central opening for receiving a teat of a cow; and
(c) a plurality of circumferentially-extending ribs formed integrally with and spaced radially outwardly from said bead and also formed integrally with and projecting axially outwardly from the exterior surface of said web section.

4,372,251
PREFABRICATED ANIMAL SHELTER
Alfred H. Keith, Minneapolis, Minn., assignor to Dairy Farm Leasing Company, Minneapolis, Minn.
Filed Mar. 27, 1981, Ser. No. 248,249
Int. Cl.^{3} A01K *1/00*
U.S. Cl. 119—16 **10 Claims**

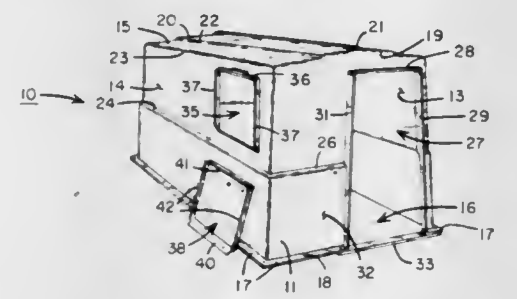

1. In a prefabricated animal shelter housing for calves and the like having front and back end walls, first and second opposite side walls and a top wall defining an open-bottomed portable shelter chamber for a relatively newborn animal, the improved combination in which the front end wall has a constantly open, laterally-offset animal door opening close to the first side wall and a closed front end wall portion extending laterally from the second side wall to the door opening, said closed end wall portion and second side wall providing a sheltered front corner area within the housing dimensioned to accommodate and protect at least the head and front leg and body portions of an animal standing crosswise along the front wall within the housing, and in which the upper portion of the second side wall has a feed opening close to the front end wall for insertion and removal of animal feed within the sheltered corner area; a cover for selectively closing and uncovering said feed opening, and externally and manually operable cover retaining means for selectively holding the cover in a position fully closing the feed opening, said animal door constituting the only substantial opening in said side and end walls when said cover is held in said fully closed position and said animal door opening having a top edge close to the top of the front wall.

4,372,252
FLOATING FISH FEEDER
Edward E. Lowry, Jr., P.O. Box 550, Greensboro, Ala. 36744
Filed Aug. 20, 1981, Ser. No. 294,558
Int. Cl.^{3} A01K *61/02*
U.S. Cl. 119—51 R **2 Claims**

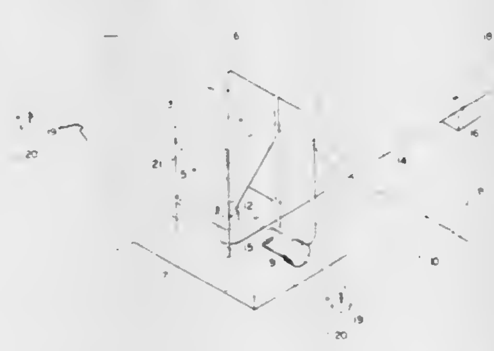

1. A device for broadcasting pelletized, granualized and powdered material over the surface of a water impoundment, comprising a hopper, a floating conduit, a pipe jet, and pumping means;
said hopper having sides sloping downward and inward to and terminating at a slightly truncated apex, said truncated apex connected to an ell joint, wherein said ell joint is swiveled about the vertical axis of said hopper;
said floating conduit comprising a conduit having floatation means attached thereto and spaced along its length; said conduit being attached to the lower end of said ell joint, and swiveled about the vertical axis of said hopper;
said pipe jet comprising a pipe, with a nozzle, which is aligned vertically over the truncated apex of the hopper, the nozzle of which terminates in the region of the truncated apex of the hopper; said pipe connected at its other end to said pumping means;
said pumping means comprising a supply conduit through which water is supplied in sufficient capacity to direct water through the pipe jet with sufficient velocity to entrain the material in the hopper;
wherein the material in the hopper is entrained in water at the region of the pipe jet nozzle and forced through the floating conduit and out its terminus over the surface of the water impoundment.

4,372,253
RADIATION BOILER
Josef Hibbel; Bernard Schleper, and Heinrich Scheve, all of Oberhausen, Fed. Rep. of Germany, assignors to Ruhrchemie Aktiengesellschaft, Oberhausen, Fed. Rep. of Germany
Filed Oct. 3, 1980, Ser. No. 193,698
Claims priority, application Fed. Rep. of Germany, Oct. 4, 1979, 2940257
Int. Cl.^{3} F22D *1/04;* **B01D** *47/02*
U.S. Cl. 122—7 R **7 Claims**

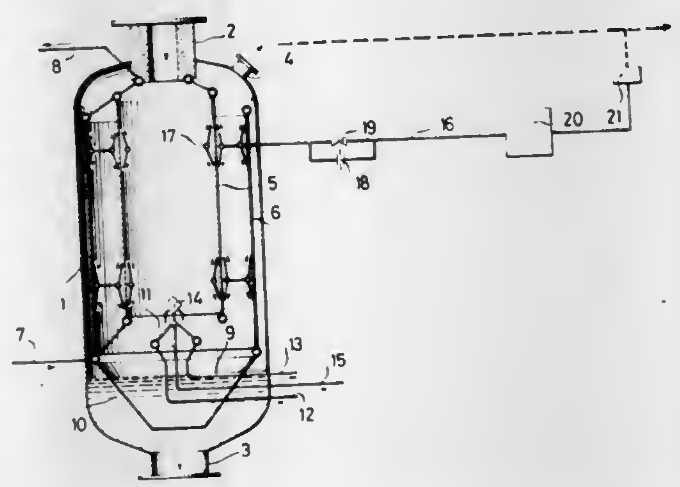

1. In a radiation boiler for cooling a gas stream containing solid and molten particles, comprising feed means for introducing said gas vertically at the top of said radiation boiler, a cooled gas outlet and a water bath disposed at the bottom of said radiation boiler for removing said particles after they have been solidified and cooled, the improvement wherein there is disposed between said feed means and said water bath at least two concentrically arranged cylindrical tubular heat exchange elements vertically disposed in the boiler and forming at least one annular passage therebetween, the passage through the innermost heat exchange element being in fluid flow registry and fluid flow communication with said feed means, a conical deflector having the axis thereof coincident with that of the innermost heat exchange element and thereby in registry with the flow of gas passing through the passage through the innermost heat exchange element and disposed toward the bottom of said radiation boiler above said water bath but at least partially below the lower end of the innermost heat exchange element whereby gas which strikes the conical surface of said conical deflector is deflected and passes through said at least one annular passage and in the passage of the innermost heat exchange element.

4,372,254
HYDRAULIC HEAT GENERATOR
Edmund Hildebrandt, 6 Cedar St., Clinton, Mass. 01510
Filed Jan. 23, 1981, Ser. No. 227,626
Int. Cl.^{3} F22B *3/06*
U.S. Cl. 122—26 **15 Claims**

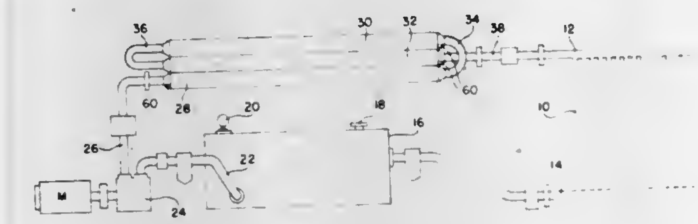

1. A hydraulic heat generator comprising a source of hydraulic fluid, a pump therefor, a heating element, and a heat diffusing means, and means placing the source, pump, element and means in circuit,
said heating element including an elongated generally hollow member and a pair of sets of relatively fixed generally complementary interfitting free-ended, opposed finger-like members therein, said sets of finger-like members together defining a zig-zag path for the hydraulic fluid through the heating element,
said pump acting to pump the fluid under pressure through the entire path.

4,372,255
FIVE-SMOKE-FLUE TYPE WET WATER BOX BOILER
Chi C. Hung, No. 1246-6, Sec. 2, Wan Shou Rd., Kuei Shan Hsiang, Tao Yuan Hsien, Taiwan
Filed Dec. 8, 1980, Ser. No. 214,108
Int. Cl.^{3} F22B *7/12*
U.S. Cl. 122—149 **1 Claim**

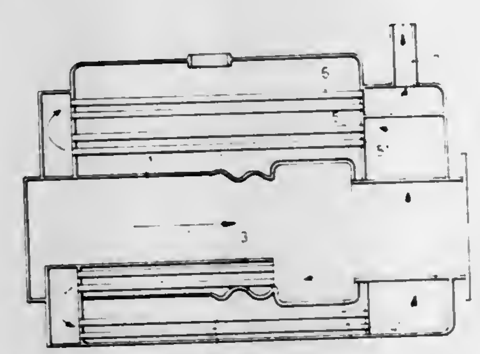

1. A boiler comprising:
an axially-horizontal cylindrical shell charageable with water and having a central axis and two ends;
a first smoke flue of relatively large diameter extending from one end of said shell to a position nearer to the other end of the shell in parallel to said axis and directly receiving hot products of combustion;
a wet-type heat-absorbing water box adjacent said other end and within said shell being connected to said first smoke flue at said position nearer to said other end, said water box having an extension beyond said other end;
a second smoke flue comprising a plurality of fire tubes positioned in two bundles horizontally adjacent to and parallel to said first smoke flue and extending from a side of said water box nearest said one end to said one end;
a substantially semi-circular first return chamber at said one end for reversing direction of flow of the products of combustion from said second smoke flue;
a third smoke flue comprising a plurality of fire tubes substantially semi-circularly around and parallel to said first and second smoke flues extending from said first return chamber to said other end, said third smoke flue substantially semi-circularly surrounding said water box;
a second return chamber at said other end for reversing direction of flow of the products of combustion from said third smoke flue, said second return chamber surrounding said extension of said water box;
a fourth smoke flue comprising a plurality of fire tubes arranged above and parallel to said first, second and third smoke flues extending from said second return chamber to said one end;
a partially semi-circular third return chamber at said one end for reversing direction of flow of the products of combustion from said fourth smoke flue, the third return chamber having a shape that complements a shape of the first return chamber to match the cylindrical shape of the shell;
a fifth smoke flue comprising a plurality of fire tubes arranged above and parallel to said fourth smoke flue extending from said third return chamber to said other end; and
a chimney connected to said fifth smoke flue at said other end of said shell;
the products of combustion being passable serially through said first smoke flue, said water box, said second, third, fourth and fifth smoke flues for heating water charged in said shell.

4,372,256
CHAR BURNING FREE PISTON GAS GENERATOR
Joseph C. Firey, P.O. Box 15514, Seattle, Wash. 98115
Filed May 14, 1981, Ser. No. 264,105
Int. Cl.^{3} F02B *71/00, 71/02*
U.S. Cl. 123—23 **34 Claims**

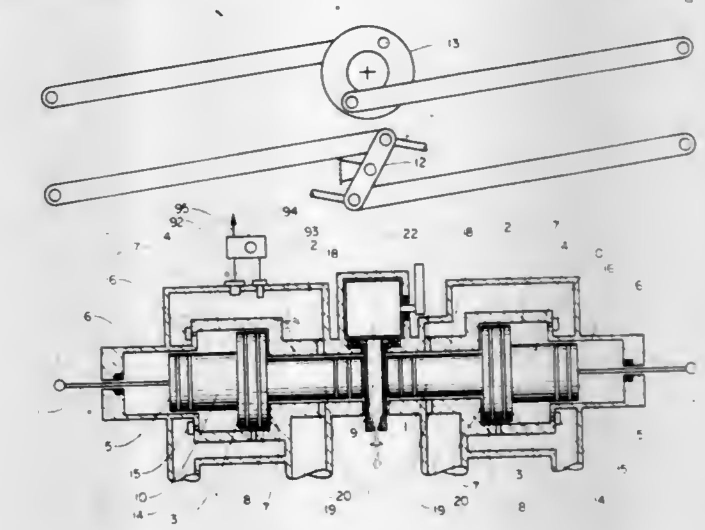

1. A free piston gas generator comprising:
a free piston mechanism comprising a power cylinder with a number of power pistons operative within each such power cylinder equal to two minus the number of cylinder heads on said power cylinder, said number of cylinder heads not exceeding one, each such power piston and each such cylinder head comprising a compressing surface with said compressing surfaces facing toward each other;
a combustion chamber secured inside the power cylinder of said free piston mechanism and comprising; means for containing char fuel and ashes so that said char fuel and ashes are mechanically separated from the power cylinder and power piston; said means for containing further comprising a refuel end through which refueling takes place, said means for containing further comprising gas flow passages which connect from that interior space of said containing means within which the char fuel and ashes are contained to that interior space of said power cylinder contained by said power cylinder and said compressing surfaces; each free piston gas generator being equipped with at least one of said combustion chambers for each free piston mechanism;
A refuel mechanism comprising; means for sealing that refuel end of said means for containing char fuel and ashes, through which refueling takes place, against gas leakage during compression and expansion processes; means for refueling fresh

char fuel at intervals into said means for containing char fuel and ashes; each free piston gas generator being equipped with at least one of said refuel mechanisms for each free piston mechanism;

a reload mechanism comprising: means for reloading a quantity of fresh char fuel into said means for refueling after each such refueling; each free piston gas generator being served by at least one reload mechanism.

4,372,257
DRIVE AGGREGATE FOR A HEAT PUMP
Peter Hofbauer; Erich Gaschler, and Cornelia Schwarz, all of Wolfsburg, Fed. Rep. of Germany, assignors to Volkswagenwerk AG, Wolfsburg, Fed. Rep. of Germany
Filed Feb. 28, 1980, Ser. No. 125,537
Claims priority, application Fed. Rep. of Germany, Mar. 5, 1979, 2908432
Int. Cl.³ F02B *17/00*
U.S. Cl. 123—68 **4 Claims**

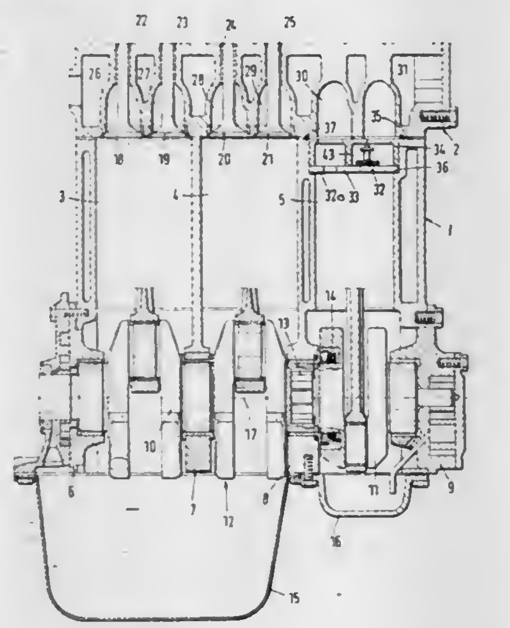

1. In a drive aggregate for a heat pump, including a cylinder block defining cavities for forming at least one cylinder of an internal combustion engine and at least one cylinder of a compressor driven by the engine; a common crankshaft passing through said cylinder block for serving both the engine and the compressor; and a plurality of bearings mounted in said cylinder block and supporting said crankshaft; the improvement wherein said cavities all have the same height dimension; further comprising a valve carrier plate sealingly secured in each cavity which forms a compressor cylinder; a compressor valve supported by said valve carrier plate; said valve carrier plate defining an end of the compressor cylinder formed by the respective cavity; a cylinder head secured to said cylinder block and extending over all said cylinders; each compressor cylinder having a top end oriented towards said cylinder heads; said valve plate being spaced from said cylinder head and from the top end of the respective compressor cylinder and being situated in its entirety within a respective said compressor cylinder; engine valves associated solely with each said engine cylinder and being mounted in said cylinder head; said cylinder head having a plurality of predetermined locations adapted to accommodate valve guide passages in the zone of each cylinder; means defining throughgoing valve guide passages solely in the predetermined locations associated with the engine cylinders for accommodating and guiding parts of said engine valves, whereby said predetermined locations of said cylinder head in the zone of each compressor cylinder being void of throughgoing valve guide passages for sealing said cylinder head in the zone of each said compressor cylinder.

4,372,258
LUBRICATING SYSTEM FOR OUTBOARD ENGINE
Tomio Iwai, Hamamatsu, Japan, assignor to Yamaha Hatsudoki Kabushiki Kaisha, Iwata and Sanshin Kogyo Kabushiki Kaisha, Hamamatsu, both of, Japan
Filed Jun. 26, 1981, Ser. No. 277,698
Claims priority, application Japan, Jun. 27, 1980, 55-87574
Int. Cl.³ F02B *33/04*
U.S. Cl. 123—73 AD **5 Claims**

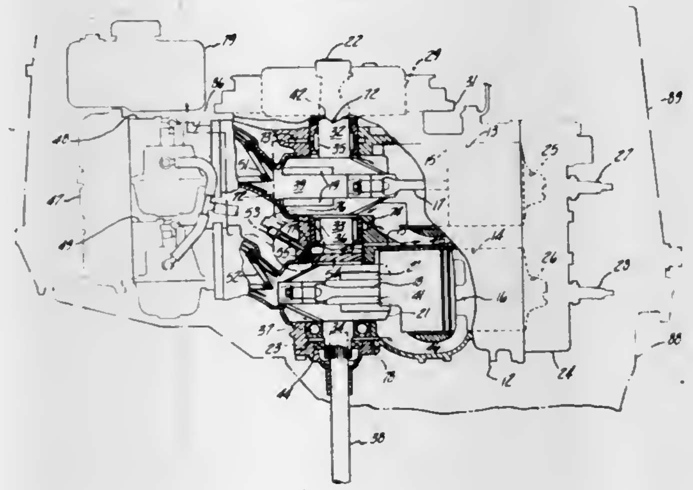

1. A lubricating system for a crankcase compression, two-cycle, multi-cylinder engine having a vertically disposed crankshaft rotatably supported in a crankcase divided into at least an upper chamber and a lower chamber, seal means cooperating with said crankshaft for sealing said uppper crankcase chamber from said lower crankcase chamber, an oil pump drive means affixed to said crankshaft in said lower chamber contiguous to said seal means, means for delivering pressurized oil from the oil pump driven by said oil pump drive means to said oil pump drive means and therefrom to at least some of the moving components within said lower crankcase chamber.

4,372,259
INTERNAL COMBUSTION ENGINE
George Vosper, 149 Earl St., Kingston, Canada (K7L 2H3)
Filed Aug. 28, 1980, Ser. No. 182,029
Int. Cl.³ F01L *1/28*
U.S. Cl. 123—79 R **2 Claims**

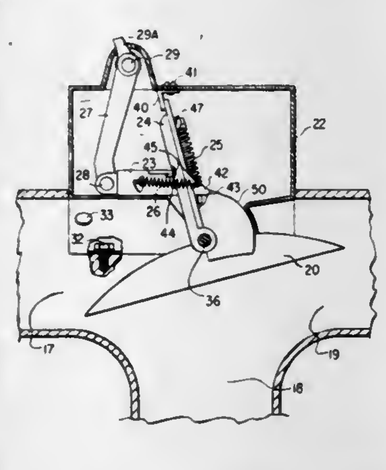

1. In a fuel injected, internal combustion engine of the type having a single poppet valve for controlling the flow of air to the combustion chamber and exit of exhaust gases therefore, the improvement comprising:

(a) an inlet passage for the supply of air under pressure;
(b) an outlet passage for exit of exhaust gases, said outlet passage communicating with said inlet passage as a continuation thereof;
(c) a further passage terminating at one end in said combustion chamber and at the other end at the junction of said inlet and outlet passages, said single poppet valve being arranged and operated to control the flow of gases through said further passage into and out of said combustion chamber in timed relation to rotation of the engine's crankshaft, all of said passages being circular in cross-sectional shape;
(d) a spoon shaped diverter valve disposed within a housing removably mounted and located at the junction of said inlet and outlet passages, said diverter valve being selectively moveable in timed relation with opening and closing of the poppet valve so as in one position to direct flow of pressurized air through the inlet passage into the combustion chamber and later, in another position, the flow of combustion gases from the combustion chamber through the outlet passage; and
(e) an over centre snap action spring biased means controlling movement of said diverter valve from each of one position to another and controlled such that when moved from said another to said one position the initial movement is slow allowing pressurized air to flow directly from said inlet passage to said outlet passage to assist in driving out the exhaust gases.

4,372,260
ENGINE FLUID HEATER
Wayne Baker, 1315 Richardson, Lewiston, Id. 83501
Filed Sep. 26, 1980, Ser. No. 191,347
Int. Cl.³ F02M *31/00*
U.S. Cl. 123—142.5 E **16 Claims**

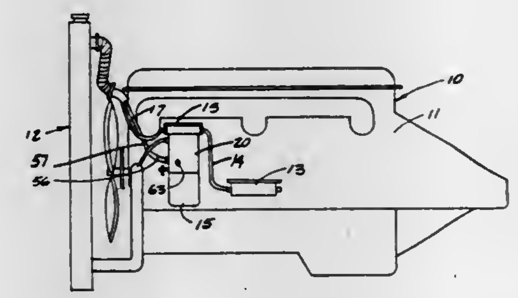

1. A fuel heater that can be mounted to an internal combustion engine on the original engine fuel filter mount having fuel intake and discharge passages for mounting a removable fuel filter having fuel intake and discharge passages in axial alignment with and complementary to those of the fuel filter mount, said heater comprising:

a hollow heater body having top and bottom ends;
first mounting means on said heater body at the top end thereof adapted to mount the heater body in alignment with the fuel filter mount;
second mounting means on said heater body at the bottom end thereof adapted to releasably mount a fuel filter in alignment with the fuel filter mount;
fuel intake means between said first and second mounting means adapted to openly and axially interconnect the fuel intake passages of the fuel filter mount and a fuel filter mounted to said second mounting means;
fuel discharge means between said first and second mounting means adapted to openly and axially interconnect the fuel discharge passages of the fuel filter mount and a fuel filter mounted to said second mounting means; and
heat exchanger means adjacent the intake and discharge means adapted to heat fuel within the hollow heater body between the first and second mounting means thereof.

4,372,261
PRE-START ENGINE HEAT SYSTEM
Jorma O. Sarto, Orchard Lake, Mich., assignor to Chrysler Corporation, Highland Park, Mich.
Filed Oct. 14, 1980, Ser. No. 196,804
Int. Cl.³ F02N *17/00*
U.S. Cl. 123—142.5 E **3 Claims**

1. In a vehicle with an engine having self-starting means activated by manual efforts of an operator while in a normal driving position, an engine fluid inlet preheating system adapted to be initiated prior to said manual starting efforts, comprising: an electrically powered heating grid across the engine fluid inlet; a battery in circuit with the heating grid for energizing same; control circuit means between the battery and heating grid for initiating energization prior to said manual starting efforts of the vehicle operator, the control circuit including switch means operated in response to and incidental with an anticipatory action of the vehicle operator in entering the vehicle whereas the heating grid is preheated by electrical power from the battery during the interval between closing the switch by the operator's incidental anticipatory action and the manual engine starting efforts by the operator.

4,372,262
STOPPING AND RESTARTING DEVICE FOR THE INTERNAL COMBUSTION ENGINE OF A MOTOR VEHICLE
Herbert Kaniut, Cologne, Fed. Rep. of Germany, assignor to Ford Motor Company, Dearborn, Mich.
Filed Sep. 22, 1981, Ser. No. 304,473
Int. Cl.³ F02N *17/00*
U.S. Cl. 123—179 J **5 Claims**

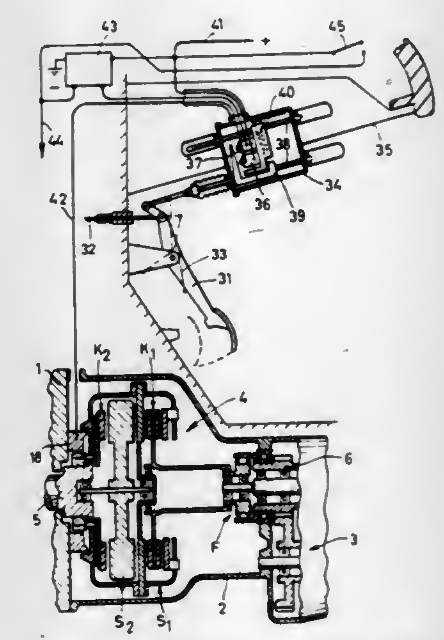

1. Apparatus for stopping and restarting the engine of a motor vehicle in response to movement of the vehicle accelerator pedal to and from a closed engine throttle position, includ-

ing, a freely rotatable flywheel, a first friction clutch means driven by the engine and movable into frictional engagement with the flywheel for the drive thereof, a second friction clutch means for connecting the engine to the vehicle gearing, first electrically operated servo means for engaging the first clutch means, second servo means for engaging the second clutch means, an electrical circuit including switch means movable between a first position establishing the engine ignition circuit and supplying fuel to the engine and energizing the first servo means to drive the flywheel from the engine and movable to a second position interrupting the ignition circuit and the fuel flow to the engine and deenergizing the first servo means thereby permitting a free rotation of the flywheel, means operatively connecting the vehicle accelerator pedal and the switch means for moving the switch means from the first position to the second position in response to release of the accelerator pedal to a closed engine throttle position to shut off the engine and movable back to the first position in response to depression of the accelerator pedal to reenergize the first servo means to reconnect the flywheel and engine crankshaft to thereby provide a drive and restart of the engine by the flywheel, and time delay means in the electrical circuit operable upon release of the accelerator pedal to delay interruption of the ignition circuit and interruption of the fuel supply for a predetermined time period.

4,372,263
APPARATUS FOR STARTING INTERNAL COMBUSTION ENGINES
Paul Costa, 3940 7th Ave. SW., Golden Gate, Fla. 33999
Filed Mar. 30, 1981, Ser. No. 249,147
Int. Cl.³ F02N ***11/12***
U.S. Cl. 123—179 SE **3 Claims**

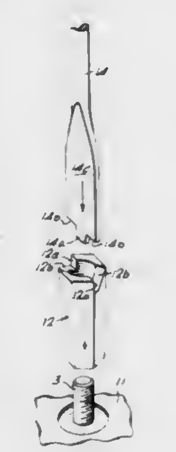

1. Apparatus for coupling a hand held electric drill to a threaded upper end of an engine shaft of an internal combustion engine for cranking and starting the engine comprising:
an elongated nut which is axially threaded so that said nut can be screwed onto the threaded end of the engine shaft, said nut having two identical V-shaped slots in one end of the nut, the first side of each slot lying parallel to the axis of the nut, and the second side of the slot lying at an angle of substantially 60° to the first side with the apex of the V-shaped slot rounded to provide a smooth incline from the rounded apex to the end of the nut, and
a tool made from a flat faced bit which can be coupled to be driven by said electric drill, said bit terminating in a flat sharp pointed tip and two sharp cutting edges at right angles to the axis of the bit for boring holes in wood, said tool being made by grinding off the tip of the bit to form a projecting flange and rounding off the cutting edges of the bit to form two edges which fit into the rounded apex of the two slots in the nut.

4,372,264
INTERNAL COMBUSTION ENGINE FOR DIVERSE FUELS
Horacio A. Trucco, 13 Saddler Ct., Huntington Station, N.Y. 11746
Filed Dec. 26, 1979, Ser. No. 107,338
Int. Cl.³ F02B ***19/10***
U.S. Cl. 123—255 **14 Claims**

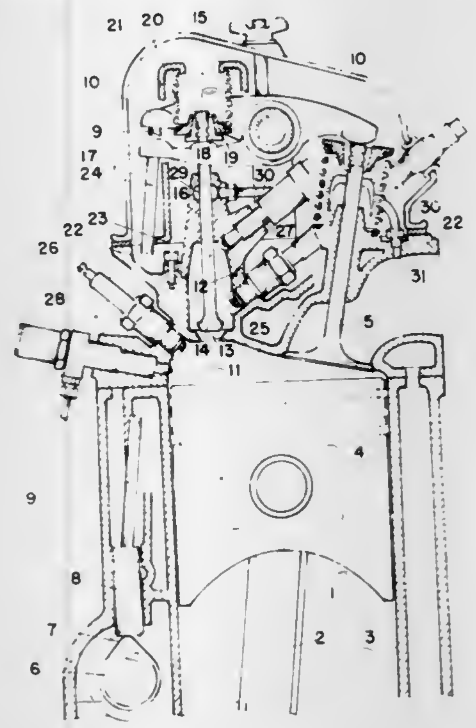

1. A device that operates in conjunction with an internal combustion engine to produce intermittent vaporization of discrete amounts of fuel that are subsequently utilized in the operation of an internal combustion engine comprising in combination, a fuel vaporizer chamber, a vaporizer valve, means to cyclically open said vaporizer valve to replenish said fuel vaporizer chamber with hot gaseous products of combustion generated by an internal combustion engine, means to cyclically introduce into said fuel vaporizer chamber metered amounts of fuel that vaporize by absorbing heat from said replenished hot gaseous products of combustion; means to close said vaporizer valve such as to temporarily entrap inside said vaporizer chamber said replenished hot gaseous products of combustion and said metered amount of fuel, means to cyclically open said vaporizer valve to discharge the resulting mixture of said vaporized fuels and said replenished hot gaseous products of combustion supplying an internal combustion engine in a mode to form a combustible mixture.

4,372,265
CONTROL CIRCUIT FOR ENGINE SPEED GOVERNOR WITH POWER TAKE OFF
Stanley J. Kasiewicz, 1807 Harvest La., Bloomfield Hills, Mich. 48013
Filed Jul. 14, 1980, Ser. No. 167,964
Int. Cl.³ F02D ***11/10***
U.S. Cl. 123—352 **10 Claims**

1. In a speed governing system for an engine having a throttle control means, said system being of the type including,
a reversible motor adapted to be connected with the throttle control means for actuating the control means selectively in a close throttle direction and open throttle direction,
speed sensing means adapted to be connected with said engine for developing a speed voltage corresponding to engine speed,
first and second switching means for energizing said motor in the close throttle and open throttle directions respectively,
logic means operatively coupled with the sensing means and said switching means for energizing the motor in a close throttle direction when the engine speed exceeds a first

predetermined value and for energizing the motor in an open throttle direction when the engine speed is less than said first predetermined value,
said system being characterized in that it includes,
a mode selector switch for selecting a first or a second mode of operation,
a close throttle switching means actuated by said throttle control means for deenergizing said motor when the throttle control means reaches a close throttle reference position,
and an open throttle switching means actuated by said throttle control means for deenergizing said motor when the throttle control means reaches an open throttle reference position,

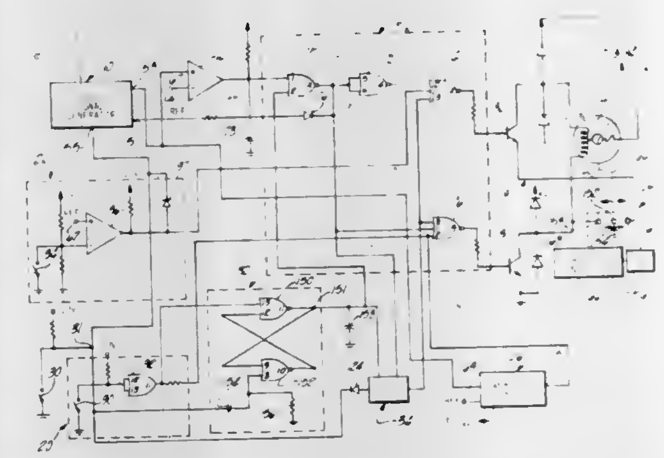

disabling means operatively coupled with said open throttle switching means for disabling it,
said mode selector switch being coupled with said disabling means to disable the open throttle switching means when the first mode of operation is selected whereby the motor is operative to actuate the throttle control means in the open throttle direction past the open throttle reference position to the wide open throttle position,
said open throttle switching means being operative when the second mode of operation is selected to deenergize said motor when the throttle control means reaches said open throttle reference position.

4,372,266
FUEL INJECTION APPARATUS FOR INTERNAL COMBUSTION ENGINES
Yasuhiro Hiyama, Musashino; Hidekazu Oshizawa, Kumagaya; Kenji Okamoto, Higashimatsuyama, and Masayoshi Kobayashi, Kawagoe, all of Japan, assignors to Diesel Kiki Co. Ltd., Tokyo, Japan
Filed Jun. 22, 1981, Ser. No. 276,001
Claims priority, application Japan, Jun. 30, 1980, 55-087934
Int. Cl.³ F02D ***31/00***
U.S. Cl. 123—357 **7 Claims**

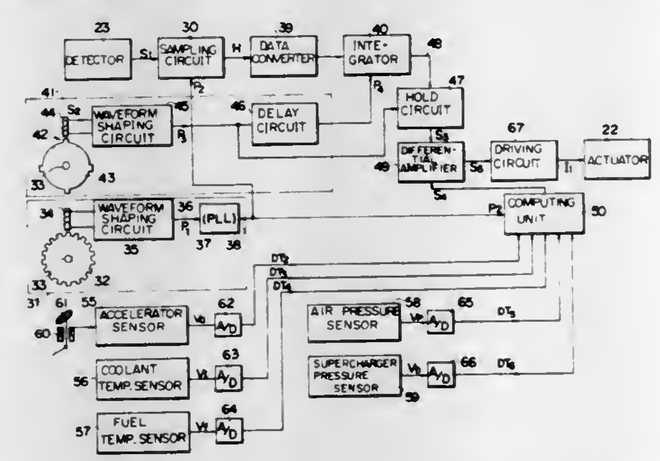

1. A fuel injection apparatus for internal combustion engines, in which said apparatus has a fuel injection pump having a member for adjusting the amount of fuel injected from an injection nozzle, said apparatus comprising:
an actuator for driving said member;
a first signal generator for generating a first signal indicative of the optimum amount of fuel to be injected under the existing engine operation conditions;
a detector for generating a position signal indicative of the position of a needle valve of the injection nozzle at every instant;
a second signal generator for generating a second signal indicative of the actual amount of fuel injected on the basis of the change in said position signal;
means for comparing said first signal with said second signal; and
a circuit for driving said actuator in accordance with the resulting signal from said comparing means so as to bring the actual amount of fuel injected into accord with the optimum amount.

4,372,267
FUEL PUMPING APPARATUS
Graham L. Adams, Potters Bar, England, assignor to Lucas Industries Limited, Birmingham, England
Filed Feb. 18, 1981, Ser. No. 235,567
Claims priority, application United Kingdom, Feb. 20, 1980, 8005640
Int. Cl.³ F02D ***31/00***
U.S. Cl. 123—366 **4 Claims**

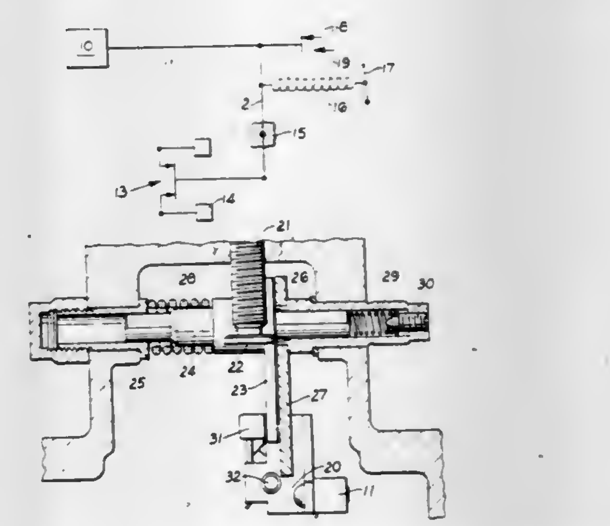

1. A fuel pumping apparatus for supplying fuel to an internal combustion engine and of the kind comprising an injection pump, an axially movable control rod the axial position of which determines the amount of fuel supplied by the injection pump at each delivery stroke, speed responsive means for moving the control rod with increasing speed in the direction to reduce the amount of fuel supplied by the injection pump, a governor spring acting to oppose movement of the control rod by the speed responsive means, a plate movable laterally relative to the direction of movement of the control rod and engageable with a part of the control rod, an axially movable shaft mounting said plate, said plate having a stop surface for engagement with said part of the control rod and a further surface engageable with an adjustable abutment carried by a housing of the apparatus, said adjustable abutment acting to determine the position of the stop surface, said plate when in an operative position acting to limit the extent of movement of the control rod in the direction to increase in use the amount of fuel delivered by the apparatus, said plate being movable to an inoperative position to allow further movement of the control rod in a direction to increase in use the amount of fuel delivered by the apparatus, first resilient means acting to bias said plate to the inoperative position, and second resilient means acting when the temperature to which it is exposed attains a predetermined value to move said plate to its operative position, said second resilient means being formed as a coiled

compression spring from an alloy whereby when the temperature is below said predetermined value the spring assumes a close coiled state and when the temperature is above said predetermined value the spring expands and behaves as a normal spring.

4,372,268
APPARATUS FOR CONTROLLING FUEL FLOW
Oldrich Kolarik, Hagerstown, Md., assignor to Mack Trucks, Inc., Allentown, Pa.
Filed Jul. 11, 1979, Ser. No. 56,645
Int. Cl.[3] F02M *39/00;* **F02D** *1/04*
U.S. Cl. 123—383 **5 Claims**

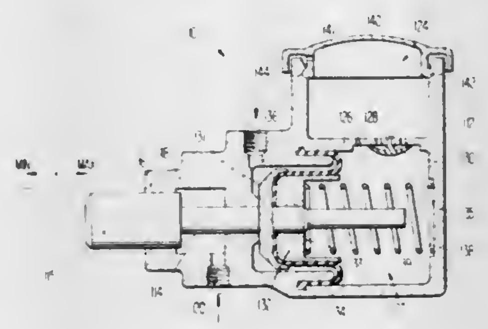

1. An apparatus for controlling a fuel flow to a diesel engine comprising:
(a) a housing;
(b) a locating member having a first portion projecting from said housing for engagement by a fuel control member and a second portion extending into said housing and reciprocally moveable therein;
(c) said housing having first and second chambers for containing hydraulic fluid, said chambers being positioned for fluid flow therebetween;
(d) a movable member, arranged for movement within said first chamber in sealing relationship therewith, said movable member connected to said locating member and arranged for transmitting pressure imparted to the second portion of said locating member to fluid in said first chamber;
(e) means for restricting flow of fluid from said first chamber into said second chamber to retard movement of said locating member in a controlled manner into said housing and permitting movement of said locating member in a substantially unrestricted manner away from said housing; and
(f) an override connecting means for applying pressure to said locating member in a direction of greater extension of said locating member from said housing, said pressure being greater than the pressure urging said locating member in the direction of lesser extension of said locating member from said housing.

4,372,269
INTERNAL COMBUSTION ENGINE
Donald K. Coles, 2505 Capitol Ave., Fort Wayne, Ind. 46806
Continuation-in-part of Ser. No. 200,369, Oct. 24, 1980, Pat. No. 4,366,793. This application Feb. 25, 1981, Ser. No. 238,253
Int. Cl.[3] F02D *5/00*
U.S. Cl. 123—436 **3 Claims**

1. An improved internal combustion engine having a combustion chamber, means for metering a series of air rations and for metering a corresponding series of fuel rations, means for mixing each one of the fuel rations with its corresponding member of the series of air rations and firing the resulting mixture in the combustion chamber so as to produce a quantum of energy, the resulting series of energy quanta being delivered to a power output shaft, the improvement comprising:
means for automatically reducing the size of members of the series of fuel rations while the size of the corresponding series of air rations is held constant, the average rate of fractional reduction of size of the fuel rations, when averaged over a thousand consecutive members of the series of fuel rations, not exceeding one half per thousand consecutive members of the series of fuel rations;
a decelerometer including a clock means for generating clock signals having at least two different frequencies and
a digital counter for counting the clock signals from the clock means,
for determining when a momentary deceleration of the shaft speed exceeds a threshold value, and when the excessive deceleration is immediately followed by a reduction of the excessive deceleration to a small value, the momentary deceleration being measured by counting up from a preset value on the digital counter at a first clock frequency

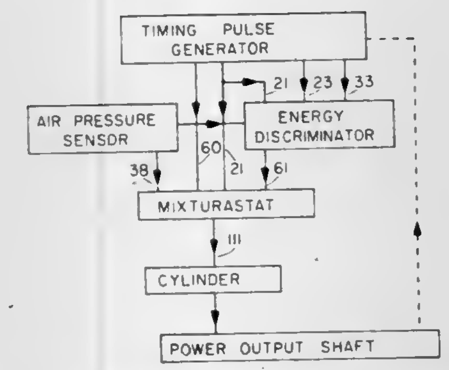

during a first angular displacement of the shaft and then counting downward on the counter at a lower second clock frequency during a second angular displacement of the shaft, the threshold value for abnormal deceleration being determined at least in part by the frequency difference between the up count and the down count;
means for automatically increasing the size of succeeding members of the series of fuel rations when the decelerometer determines that the engine has produced a quantum of energy which is abnormally deficient compared to both the immediately preceding and the immediately succeeding members of the series of energy quanta, the single fractional increase in size of the fuel ration not exceeding one fifth when the size of the air ration is unchanged.

4,372,270
METHOD AND APPARATUS FOR CONTROLLING THE COMPOSITION OF THE COMBUSTIBLE MIXTURE OF AN ENGINE
Reinhard Latsch, Vaihingen, and Valerio Bianchi, Hochdorf, both of Fed. Rep. of Germany, assignors to Robert Bosch GmbH, Stuttgart, Fed. Rep. of Germany
Filed Dec. 6, 1976, Ser. No. 747,676
Claims priority, application Fed. Rep. of Germany, Dec. 6, 1975, 2554988
Int. Cl.[3] F02B *3/00*
U.S. Cl. 123—440 **24 Claims**

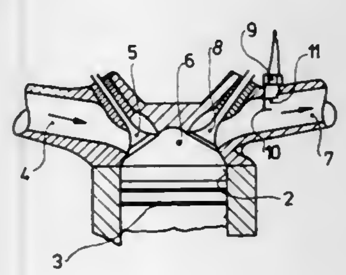

1. A method for controlling the fuel-air mixture of an internal combustion engine, said engine including combustion chambers, inlet conduits leading to said combustion chambers and exhaust conduits leading from said combustion chambers to the atmosphere, comprising the steps of

placing an ion-current sensor in the exhaust conduit for measuring an ion-current;
generating a nominal value of the ion-current;
comparing the magnitude of the ion-current with the nominal value and generating a signal representing the difference between the measured value of the ion-current and said nominal value; and
periodically integrating a signal derived from the signal representing the difference between the measured value of the ion-current and said nominal value, especially during one working cycle of a piston of the engine, and altering the fuel-air mixture of the engine in dependence on the result of the integration.

4,372,271
SINGLE POINT INTERMITTENT FLOW FUEL INJECTION
David G. Elpern, Hamtramck, and Gary L. Casey, Troy, both of Mich., assignors to The Bendix Corporation, Southfield, Mich.
Continuation of Ser. No. 947,910, Oct. 2, 1978, abandoned, which is a division of Ser. No. 778,822, Mar. 17, 1977, Pat. No. 4,132,203. This application Jan. 29, 1981, Ser. No. 229,492
Int. Cl.[3] F02M *51/02*
U.S. Cl. 123—445 **5 Claims**

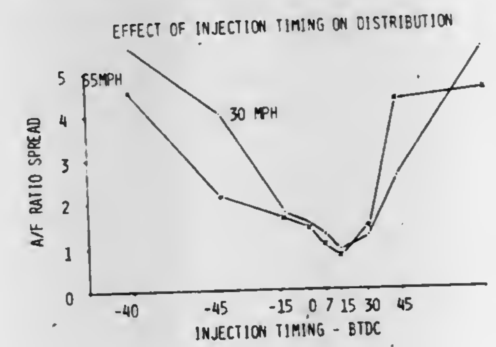

1. A fuel management system for an internal combustion engine having a plurality of cylinders and a source of fuel supply, throttle body means mounted on the engine having throat means for delivering fuel to the engine, and means for delivering fuel from the supply to the engine, the engine having an intake valve for each cylinder and a manifold plane interconnecting the throttle body with each cylinder through the intake valve, the system comprising single point injector means disposed contiguous with said throttle body for controlling the injection of fuel into the throat means, means for atomizing the fuel, and means for substantially equalizing the fuel distribution from cylinder-to-cylinder from said single point injector means including means for pulsing said injector means once for each cylinder at a fixed preselected angle of rotation of the engine relative to the opening of the valve corresponding to each cylinder and creating a charge of finely atomized air/fuel, said fixed rotation of the engine being selected to maximize the portion of the air/fuel charge resulting from each injector pulse which is carried to said corresponding cylinder for said opening valve by controlling the time of creation of said air/fuel charge relative to the rotation of the engine and said opening valve.

4,372,272
FUEL DELIVERY SYSTEM WITH FEED AND DRAIN LINE DAMPING
Richard P. Walter, Southfield, and Lael B. Taplin, Union Lake, both of Mich., assignors to The Bendix Corporation, Southfield, Mich.
Filed Jul. 31, 1981, Ser. No. 288,728
Int. Cl.[3] F02B *3/00*
U.S. Cl. 123—467 **17 Claims**

1. A fuel delivery system having metering and injection modes of operation, for injecting fuel into the combustion chambers of a diesel engine, comprising:
a fuel reservoir;
pump means for extracting fuel from said fuel reservoir and selectively applying pressurized fuel to one fuel injector of a plurality of fuel injectors during an injection mode and for selectively depressurizing, during a metering mode, a different one of said plurality of fuel injectors wherein said pressurizing and depressurizing are performed in correspondence with the combustion process within the engine;
a plurality of fuel injectors wherein each fuel injector is adapted to inject fuel within the engine, and has a metering chamber for accepting a determinable quantity of fuel prior to delivery of said determinable quantity of fuel to the respective combustion chambers of the engine in correspondence with the combustion process therein;

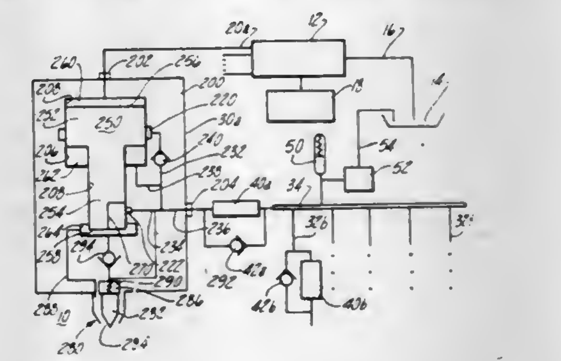

a plurality of feedlines interconnecting each of said fuel injectors with said pump means, wherein each feedline is characterized as having a determinable impedance;
pressure source means for establishing a pressure level of fuel intermediate the pressurizing and depressurizing pressure levels applied to said plurality of fuel injectors and for supplying said determinable quantity of fuel to each of said metering chambers; and
drain line means, for carrying fuel between each of said fuel injectors and said pressure source means including a fuel carrying conduit, one associated with each of said fuel injectors, having an impedance equal to the impedance of a corresponding one of said feedlines and, having located therein flow restricting means for restricting the flow therethrough, wherein said flow restricting means has an impedance level to flow nearly equal to the impedance of a corresponding one of said conduits.

4,372,273
QUADRATURE TRIGGER SYSTEM FOR SEQUENTIAL FUEL INJECTION
Peter W. Harper, Agne, France, assignor to The Bendix Corporation, Southfield, Mich.
Filed Apr. 1, 1981, Ser. No. 249,772
Int. Cl.[3] F02D *5/02*
U.S. Cl. 123—490 **2 Claims**

1. In an internal combustion engine having an engine camshaft rotating once for each engine cycle, a quadrature trigger system for a four cylinder sequential fuel injection system having an injector for each cylinder, the system for synchronizing the injections within the first ninety degrees of rotation of the camshaft said trigger system characterized by:
a semicircular cam member adapted for rotation with the camshaft;
two proximity sensors mounted relative to said cam member and positioned ninety degrees apart each responsive to said semicircular cam member for generating an electrical pulse having pulse width time equal to the time said semicircular cam member is in sensing proximity to each of said sensors;
decoding means having two pulse generators each generating sequential injector actuator pulses for two injectors; and

logic means responsive to said sensors and said pulse generators for generating four sequential injector actuator

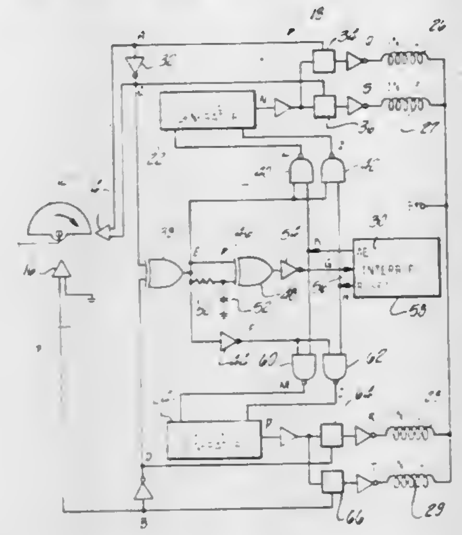

pulses, each pulse logically directed to a particular one of the injectors.

4,372,274
DIGITAL CONTROL SYSTEM FOR INTERNAL COMBUSTION ENGINE
Sadao Takase, Yokohama, Japan, assignor to Nissan Motor Company, Limited, Yokohama, Japan
Filed May 2, 1980, Ser. No. 146,015
Claims priority, application Japan, May 4, 1979, 54-54062
Int. Cl.[3] **F02P** *5/04;* **F02B** *3/00;* **H03K** *5/13*
U.S. Cl. 123—491 **4 Claims**

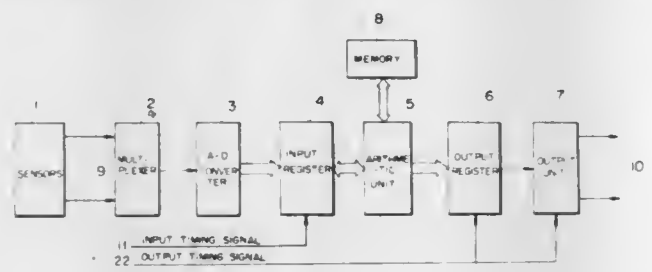

4. A method of enhancing operation of a control system for an internal combustion engine which is controlled by a computer means normally operable under control of an operating program for sensing engine operating parameters, processing said operating parameters and generating engine controlling values for controlling said engine, said method comprising the steps of:

(a) storing initial values corresponding to at least one of (1) a preset input value and (2) a preset output value;
(b) detecting an electronic signal indicative of system power-on;
(c) detecting crank revolution timing signals indicative of predetermined amounts of crankshaft revolution;
(d) detecting timing signals generated at predetermined time intervals by a clock of said computer;
(e) in response to at least one of said timing signals, said power-on signal and the absence of any crank revolution signals occurring subsequent to said power-on signal, operating said computer for executing an initialization routine for performing at least one of (1) transferring said preset input value into an input register of said computer for simulating the sensed engine operating parameter normally sensed by sensors of said engine, and subsequently processing said preset input value under control of said operating program to generate at least one of said engine controlled values, and (2) transferring said preset output value into an output register of said computer for simulating at least one of said generated engine controlled values of said operating program; and
(f) controlling said engine at least prior to receipt of said first crank revolution timing signal occurring subsequent to said power-on signal by at least one of (1) said at least one engine controlling value calculated by said computer from said preset input value and (2) said simulated engine controlling value derived from said preset output value.

4,372,275
FUEL VAPORIZING CARBURETOR
Arlo R. Schmidt, 703 DeClark St., Beaver Dam, Wis. 53916
Filed May 14, 1980, Ser. No. 149,935
Int. Cl.[3] **F02M** *17/28*
U.S. Cl. 123—522 **8 Claims**

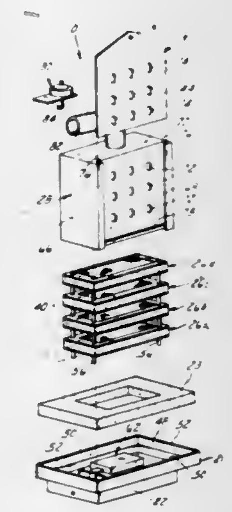

1. A liquid fuel vaporizer for an internal combustion engine, said vaporizer comprising;
a housing having an air inlet at one end and an outlet at the other end,
a liquid fuel reservoir in said housing,
a filter assembly in said housing downstream from said reservoir, said filter assembly including a series of filters of progressively smaller size pores located at spaced intervals within said housing, one of said filters being immersed in said fuel reservoir,
means for directing air from said air inlet into said fuel reservoir whereby air passing through said fuel reservoir will pick up fuel and carry it into said filter assembly where the fuel droplets are reduced in size prior to entering the fuel outlet, and
secondary air inlet means in said housing for admitting secondary air into the spaces between said filters.

4,372,276
ARRANGEMENT FOR SWITCHING A CARBURETOR IN INTERNAL COMBUSTION ENGINES
Ake A. Bernhardsson, Sollebrunn, and Kent A. Svensson, Vänersborg, both of Sweden, assignors to Saab-Scania Aktiebolag, Sodertalje, Sweden
Filed Jun. 13, 1980, Ser. No. 159,282
Claims priority, application Sweden, Jun. 19, 1979, 7905386
Int. Cl.[3] **F02M** *13/08*
U.S. Cl. 123—525 **4 Claims**

1. An arrangement for switching a carburettor for an internal combustion engine for alternative operation on liquid or gaseous fuel, said carburettor having a through-passage which forms a portion of an inlet duct to the engine, there being provided in said inlet duct a manually operable throttle valve and an air valve located upstream of said throttle valve, said air valve including a piston for variably constricting said through-passage and being provided with a tapered metering needle engaging in a first nozzle for metering liquid fuel to said through-passage, a second nozzle for metering gaseous fuel to said through-passage, the supply of liquid or gaseous fuel through the respective nozzles being regulatable by means of solenoid valves and an electrical circuit for controlling the solenoid valves, characterized in that at least one solenoid, incorporated in said electrical circuit, is adapted to at least indirectly actuate said piston to assume and retain a position minimally constricting said through-passage, simultaneously as one of said solenoid valves keeps the communication for the supply of gaseous fuel open and another one of said solenoid

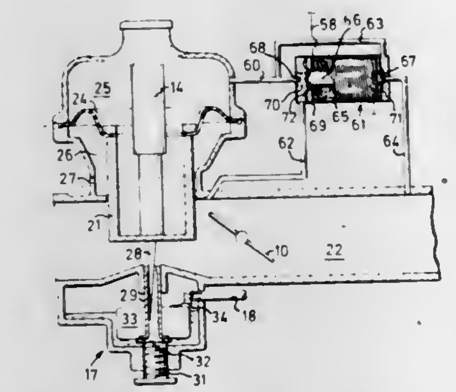

valves keeps a communication for the supply of liquid fuel closed, said arrangement including a chamber and being further characterized in that said solenoid is incorporated in a further solenoid valve which controls communication between said through-passage and said chamber for influencing the position of said piston in the air valve.

4,372,277
EXHAUST GAS RECIRCULATION CONTROL SYSTEM
Yutaka Otobe, Niiza, and Michio Kawamoto, Tokyo, both of Japan, assignors to Honda Giken Kogyo Kabushiki Kaisha, Tokyo, Japan
Filed Apr. 16, 1981, Ser. No. 254,991
Int. Cl.[3] **F02M** *25/06*
U.S. Cl. 123—571 **2 Claims**

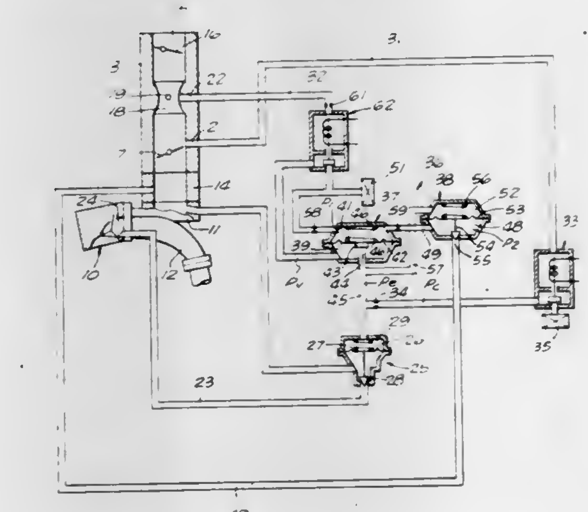

1. An exhaust gas recirculation control system for an internal combustion engine for a vehicle, the engine having an intake passage, an exhaust passage, and a recirculation passageway connecting said exhaust passages, the improvement comprising, in combination: a recirculation control valve in the passageway and having a vacuum pressure responsive actuator, a first conduit connecting the pressure responsive actuator with the intake passage, an air conduit connecting the intake passage downstream from a throttle valve therein to an inlet for atmospheric air, an air valve having a vacuum pressure chamber with a diaphragm and having a valve element secured to the diaphragm for opening or closing said air conduit, said vacuum pressure chamber of said air valve communicating with said pressure responsive actuator, a regulating valve having a vacuum pressure chamber and a valve chamber adjacent to said vacuum pressure chamber with a diaphragm intervening therebetween and a valve element secured to the diaphragm, said vacuum pressure chamber of said regulating valve being interposed in said air conduit upstream from said air valve, a second conduit connecting said valve chamber of said regulating valve with said intake passage upstream from the throttle valve, said valve element of said regulating valve controlling intensity of the vacuum pressure in said vacuum pressure responsive actuator and vacuum pressure in said vacuum pressure chamber of said air valve in response to differential pressure between pressures in both chambers of said regulating valve, and an electric-magnetic valve in said second conduit for opening or closing the second conduit in response to a sensor for an engine operating parameter.

4,372,278
HIGH TEMPERATURE AND HIGH PRESSURE FUEL INJECTION APPARATUS FOR INTERNAL COMBUSTION ENGINES
Rodney D. Smith, 6550 N. 2nd Dr., Phoenix, Ariz. 85013
Filed Oct. 20, 1980, Ser. No. 199,089
Int. Cl.[3] **F02M** *31/00*
U.S. Cl. 123—557 **9 Claims**

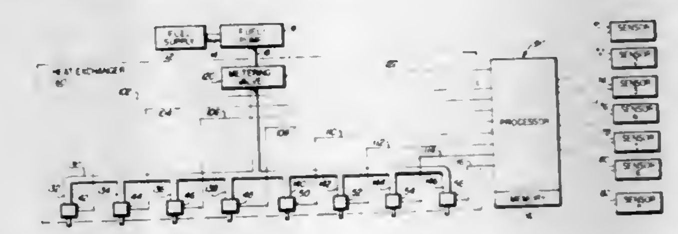

1. Fuel injection apparatus in an internal combustion engine, comprising, in combination:
cylinder means in which fuel is combusted;
a supply of fuel;
manifold means for distributing fuel from the supply of fuel to the cylinder means;
pump means for pressurizing fuel in the manifold means to a pressure of between about 450 psi and about 600 psi to prevent the fuel from vaporizing;
heat exchanger means for heating the pressurized fuel to its vapor point and for maintaining the temperature of the fuel at its vapor point until injected into the cylinder means;
fuel injection means connected to the manifold means and to the cylinder means for receiving the heated and pressurized fuel, and including valve means opening in response to a signal for allowing the heated and pressurized fuel to flow out of the injector means and into the cylinder means in the form of vapor as the result of the pressure and temperature of the fuel;
signal means for providing a signal to the valve means for opening the valve means to meter a flow of heated and pressurized fuel;
a plurality of sensors connected to the engine for monitoring a plurality of engine functions for providing information to the signal means; and
a plurality of predetermined parameters for comparing with the information provided by the plurality of sensors and connected to the signal means for determining the length of time of opening of the valve means and providing the signal to the valve means in accordance with the determined length of time.

4,372,279
HEATED FUEL LINE
Richard W. Parks, Hayward, Calif., assignor to Paccar Inc., Bellevue, Wash.
Filed Nov. 24, 1980, Ser. No. 209,712
Int. Cl.[3] **F02M** *31/00*
U.S. Cl. 123—557 **5 Claims**

1. A heated fuel line for a liquid-fuel engine having a fuel tank, a fuel line leading from the tank to the engine, and an electrical power supply, comprising:
an elongated electrical resistance heating element, compris-

ing a pair of parallel conductive wires spaced apart and covered by a non-metallic resistance sheath in the shape of a flat, thin tape,
said element being inside the fuel line and of substantially less cross sectional area than the fuel line;
a fitting in the fuel line with means connecting the heating element to the exterior of the fuel line; and

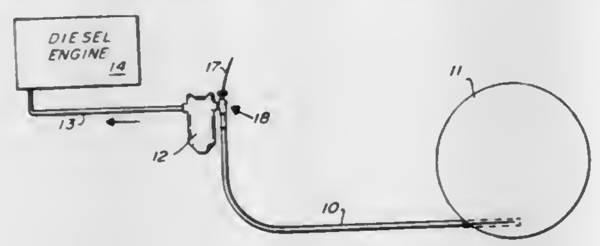

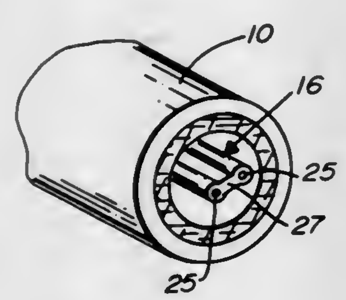

external wiring connecting the connecting means and both wires of the heating element in an electrical circuit to the power supply;
whereby the fuel in the fuel line is heated directly and efficiently by the heating element, and solidifying of fuel in the line in extremely low temperatures is avoided.

4,372,280
FUEL VAPORIZER
Jerry W. Adams, Colony, Tex., assignor to JEB Energy Industries, Inc., Dallas, Tex.
Continuation-in-part of Ser. No. 67,879, Aug. 20, 1979, Pat. No. 4,274,383. This application Apr. 17, 1981, Ser. No. 255,267
Int. Cl.³ F02M *17/22*
U.S. Cl. 123—557 **3 Claims**

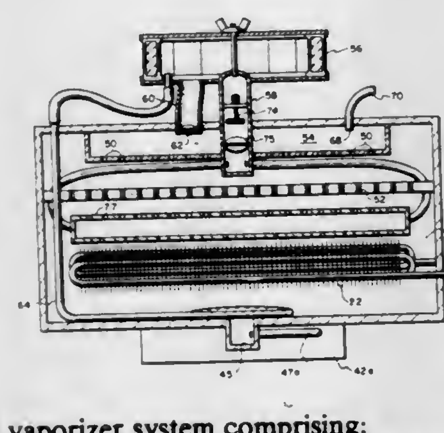

1. A fuel vaporizer system comprising:
a vapor compartment for vaporizing liquid fuel;
a heat exchanger disposed within said vapor compartment;
a liquid fuel supply means coupled to said vapor compartment;
input means for introducing ambient air into said vapor compartment, said input means including an air manifold having a plurality of small apertures disposed in the upper surface thereof and a plurality of larger apertures disposed in the lower surface thereof;
a check valve located at said input means for ceasing the introduction of ambient air into said vapor compartment in response to positive pressure therein; and
a vapor mixture compartment located above said vapor compartment having a plurality of apertures located therein to permit entry of vaporized fuel from said vapor compartment, a control valve for selectively controlling the entry of ambient air into said vapor mixture compartment, and vapor outlet means adapted to be connected to an internal combustion engine.

4,372,281
SPRING TYPE BOOMERANG PROJECTING PISTOL
Franco Fiorani, Modena, Italy, assignor to Dulcop International S.p.A., S. Lazzaro Di Savena, Italy
Filed Jul. 21, 1980, Ser. No. 170,415
Int. Cl.³ F41B *7/00*
U.S. Cl. 124—16 **3 Claims**

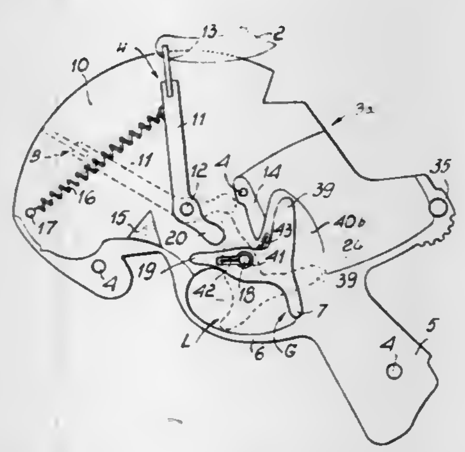

1. A toy pistol for repeated launching of boomerangs comprising:
a body defining a grip and a launching chamber for the boomerangs,
a magazine formed in said body above said grip, in which a plurality of boomerangs are arranged in side by side relationship, said magazine having a bottom against which the boomerangs are pressed by means of a spring loaded device,
a boomerang projecting lever journalled in said launching chamber and having gripping means at its free end for releasable retention of boomerang and a shaped extension, spring means arranged in said launching chamber and operatively associated to said lever to urge the latter for projection of a boomerang,
a housing slot formed in said body and communicating with said magazine for receiving the boomerang resting on the bottom of said magazine,
a trigger rotatably supported in said body and having a cam portion in operative engagement with said shaped extension and an ejecting portion adapted to penetrate said magazine, actuation of said trigger causing along a first rotational movement thereof said ejecting portion to enter said magazine for urging the boomerang resting on the bottom of the magazine into said housing slot and said cam portion to engage said extension to rotate said lever from a resting position in a position in which the gripping means grip the urged boomerang at one end thereof, whereas along an additional rotational movement of said trigger said cam portion disengages from said extension thus permitting said lever under the action of said spring means to snap back into said resting position, whereby the gripped boomerang is entrained out of said housing slot and thrown away.

4,372,282
ARCHERY BOW WITH ARROW SUPPORT
Edward Sanders, P.O. Box 585, Laverne, Okla. 73848
Filed Feb. 8, 1980, Ser. No. 119,943
Int. Cl.³ F41B *5/00*
U.S. Cl. 124—24 R **6 Claims**

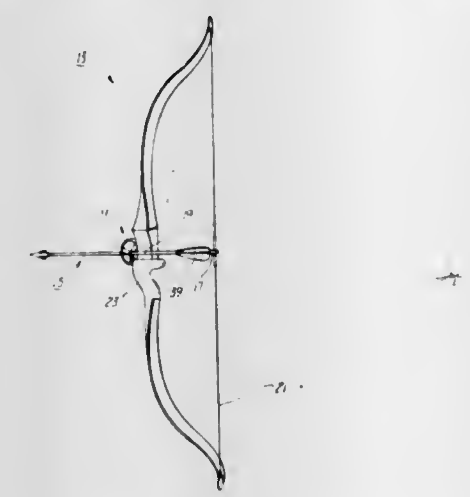

1. An archery bow comprising:
a bow member having a handle disposed at a midportion thereof and an open arrow rest ledge disposed adjacent said handle;
radial support means for radially supporting an arrow in a ready-to-shoot position with respect to said bow member including an exterior frame having an opening for receiving an arrow longitudinally therethrough and at least three flexible arrow support arms extending radially into said opening forming a radial enclosure for radially supporting an arrow in a ready-to-shoot position with respect to said bow member; and
means for removably connecting said radial support means to said bow member such that said archery bow is functional in a conventional manner with said radial support means removed.

4,372,283
BALL SERVING APPARATUS HAVING INDEPENDENTLY OPERATING HORIZONTAL AND VERTICAL FIRING BARREL OSCILLATING MEANS
William J. Balka, Jr., 1120 Prospect St., Westfield, N.J. 07090
Filed May 14, 1981, Ser. No. 263,409
Int. Cl.³ F41F *1/04*
U.S. Cl. 124—56 **2 Claims**

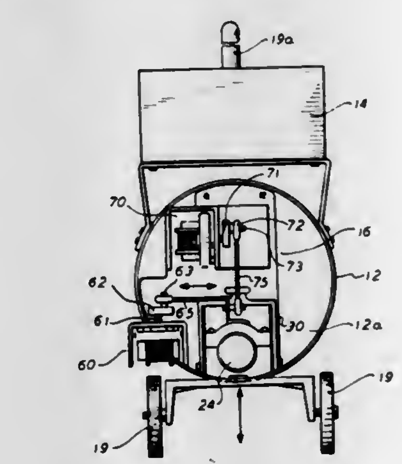

1. In an automatic ball serving apparatus having a ball firing barrel connected by a flexible tube to a compressed air bucket disposed substantially horizontally and including a front end face from which compressed air is fed through said flexible tube into said barrel to fire balls therethrough, the improvement which comprises: a first brace section pivotally mounted to the lower part of said front end face for swinging movement relative to said compressed air bucket about a first axis, a second brace section pivotally mounted on said first brace section and attached to said firing barrel for pivotally mounting said firing barrel on said first brace section for swinging movement relative to said first brace section about a second axis disposed at a generally right angle to said first axis, a first motor mounted on said front end face above said first brace section, a first connector extending from said first motor to said barrel for continuously oscillating said firing barrel about said second axis, and a second motor mounted on said front end face spaced to the side of said first brace section, a second connector extending from said second motor to said first brace section for continuously oscillating said first brace section and thus the firing barrel also, about said first axis, whereby balls may be fired successively through said firing barrel so as to be discharged in random directions both in respect to the height of the served ball and its lateral displacement.

4,372,284
BASEBALL-PITCHING MACHINE
James A. Shannon, 1705 W. Hunt, and B. W. McClure, 1517 Lakewood, both of Sherman, Tex. 75090
Filed Apr. 14, 1980, Ser. No. 139,792
Int. Cl.³ F41B *11/00*
U.S. Cl. 124—78 **11 Claims**

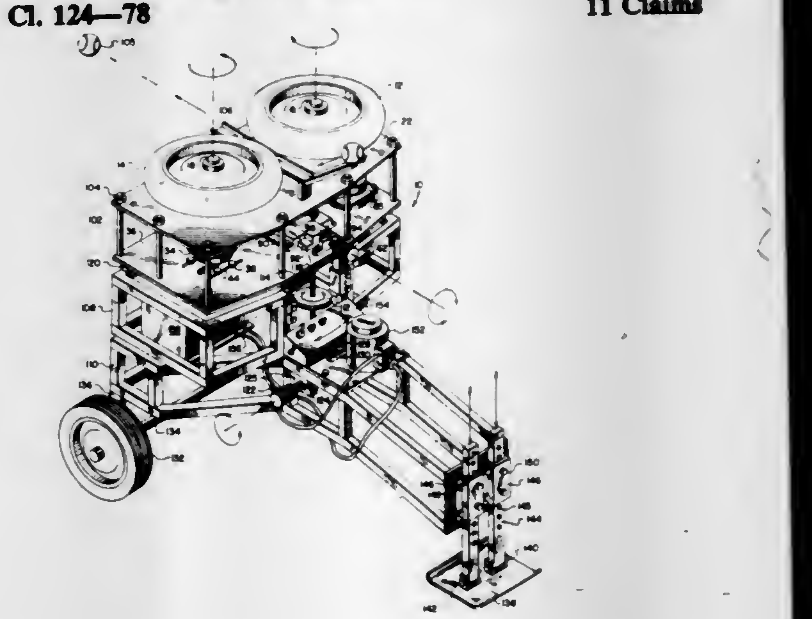

1. A baseball pitching machine comprising a single shunt wound DC motor having a V-belt pulley thereon; a single double backed V-belt; a single spring-loaded variable speed drive pulley; a first pneumatic tire wheel axially attached to such variable drive pulley; a second wheel axially mounted on a non-variable drive pulley; said V-belt connecting said variable drive pulley, DC shunt wound motor, and non-variable drive pulley; a system of idler pulleys connected to the V-belt for rotating said variable drive pulley and non-variable drive pulley in opposite directions; means for varying the tension on the V-belt; securing means for securing the variable and non-variable drive pulleys, motor, and idler pulley system, and tension varying means so that said V-belt runs substantially in a single plane; means for securing said first and second pneumatic tires so that their axes of rotation are always perpendicular to the plane of the V-belt; means for tilting the plane of the V-belt while such plane remains in perpendicular relationship with the axes of rotation of said first and second wheels; means for pivoting the plane defined by the axes of rotation of the first and second wheels; means of adjusting the distance between the axes of rotation of the first and second pneumatic tire wheels comprising an upper plate and a lower plate, a slot in the upper plate and a slot in the lower plate, both slots receiving an axle axially attached to said first pneumatic tire wheel, such that the center lines of the slot in the upper plate and the slot in the lower plate lie in the same plane as the axes of

rotation of the first pneumatic tire wheel and the second pneumatic tire wheel, and the width of said slot being slightly greater than the diameter of the axle, two narrow slots adjacent and parallel to each said slots on either side of said slots, two bearings positioned axially according to the axis of rotation of said first pneumatic tire wheel and receiving the axle, wherein one of such bearings is fastened to the upper plate at the said slot in that plate and to the lower plate at the said slot in that plate by means of bolts passing through said narrow slots which may be loosened to allow the bearings to be moved along said slot and the bolts along said narrow slots; means for varying the distance between the axes of rotation of the first and second wheels; means for introducing a ball into the space between the first and second wheels along a path perpendicular to the plane defined by the axes of rotation of the first and second wheels; and the distance between the axes of rotation of the first and second wheels being adjusted so that balls of varying sizes are gripped between the first and second wheels briefly before being ejected from such oppositely rotating wheels.

4,372,285
ADJUSTABLE CABLE END BRACKET FOR COMPOUND BOW
Gary Simonds, Gainesville, Fla., and Arnold D. McKee, Hartford, Ill., assignors to Victor United, Inc., Chicago, Ill.
Filed Mar. 30, 1981, Ser. No. 248,976
Int. Cl.³ F41B *5/00*
U.S. Cl. 124—90 **4 Claims**

1. In a compound archery bow having wheel assemblies eccentrically mounted upon pivot pins disposed adjacent each of two bow limb tips, a bowstring spanning said two wheel assemblies, a tension cable passing around each said wheel assembly and having a free end provided with an end fixture adjustably attached adjacent and opposite said wheel assembly; the improvement comprising, a cable end attachment bracket mounted upon at least one said pivot pin, said bracket including, separate elongated bow cable plates each having inside faces at least partially overlapping one another and each having oppositely directed outside faces, opposite inner and outer edges on each said plate, of said bow plates provided with mounting means adjacent its outer edge engageable with said pivot pin adjacent one said wheel assembly, said mounting means including a pivot bore extending through said bow plate outside and inside faces, said cable plate having cable end connecting means adjacent said cable plate outer edge receiving one said tension cable end, said cable plate connecting means including a key opening extending through said cable plate outside and inside faces, said key opening receiving the end of said cable end fixture, mating adjustment means on said overlapping inside faces selectively engageable to define the axial length of said bracket between said bow plate mounting means and said cable plate connecting means, releasable retaining means operable to clamp said mating adjustment means together to fixedly maintain said selected bracket axial length and said mating adjustment means comprising a plurality of teeth on said cable and bow plate inside faces adjacent said inner edges and extending transversely of the axial extent of said plates.

4,372,286
WOOD BURNING STOVE
Arthur L. Baker, R.D. #1, Lewisberry, Pa. 17339
Continuation of Ser. No. 949,104, Oct. 6, 1978, Pat. No. 4,258,693. This application Dec. 16, 1980, Ser. No. 216,853
The portion of the term of this patent subsequent to Mar. 31, 1998, has been disclaimed.
Int. Cl.³ F24C *1/14*
U.S. Cl. 126—77 **12 Claims**

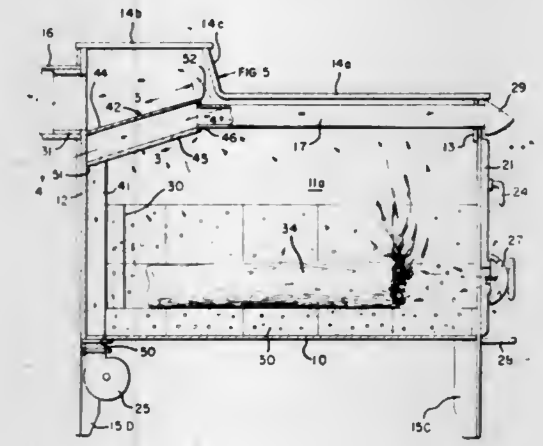

9. In a stove which includes a fire chamber comprising opposite side walls, top and bottom walls, front and rear walls, draft inlet means located at the front of the fire chamber and a flue opening located in the top rear section of the fire chamber, the improvement which comprises:
an enclosed air chamber within the fire chamber for transferring heat from a fire burning in the fire chamber to air brought into the air chamber from outside the stove, the air chamber comprising;
a lower substantially vertical portion extending upwardly from the bottom wall of the fire chamber and adjacent the rear wall thereof to a point below the flue opening, and
an upper portion joined to and communicating with the lower portion at the upper end of the lower portion and extending upwardly therefrom at an acute angle with the horizontal to a point forward of the flue opening, the upper portion including upper and lower walls at least one of which is in sealing engagement with the opposite side walls of the fire chamber, the forward end of the air chamber being positioned below the top wall of the fire chamber a distance sufficient to allow hot gases from the fire to flow between the air chamber and the top wall of the fire chamber on their way to the flue opening.

4,372,287
WOOD-BURNING STOVE AND METHOD FOR BURNING WOOD
Roy E. Van Der Linden, 3115 Sam's Creek Rd., New Windsor, Md. 21776
Filed Oct. 17, 1980, Ser. No. 198,191
Int. Cl.³ F24B *5/00;* **C10B** *1/06*
U.S. Cl. 126—79 **4 Claims**

1. A wood-burning stove comprising:
a substantially closed first chamber for containing wood having volatiles to be driven therefrom in the absence of air;

a second chamber interfacing with the first chamber for combustion of the volatiles produced in the first chamber;
means for introducing air into the second chamber;
means for transmitting volatiles from the first chamber to the second chamber upon heating the first chamber by combustion in the second chamber wherein carbon containing residuals remain in the first chamber after the volatiles have been driven from the first chamber, said transmitting means being the only substantial connection between the

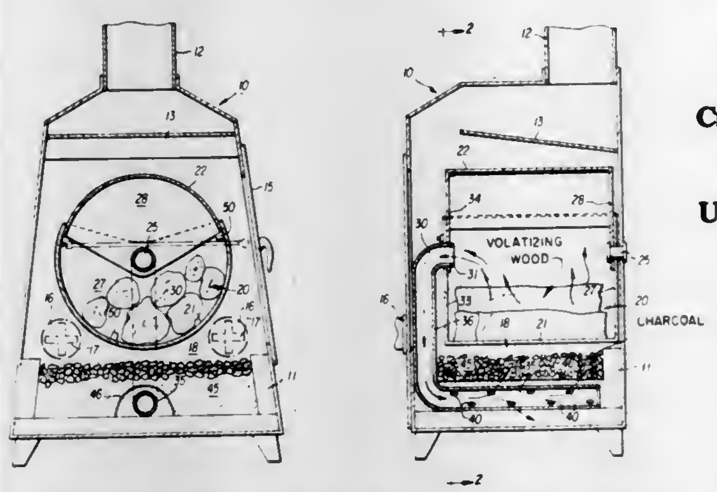

interior of the first chamber and the second chamber during normal operation of the stove, and
means for dumping the carbon-containing residuals remaining in the first chamber after burning wood therein into the second chamber, whereby when the first chamber is again loaded with wood heat, from the carbon-containing residuals helps drive volatiles from the wood, which volatiles are burned in the second chamber along with the carbon-containing residuals.

4,372,288
OUTSIDE COMBUSTION AIR UNIT FOR MASONRY FIREPLACE
James E. Nicholas, 211 W. Hess St., Bushnell, Ill. 61422
Filed Jul. 8, 1980, Ser. No. 166,415
Int. Cl.³ F24B *13/02*
U.S. Cl. 126—143 **3 Claims**

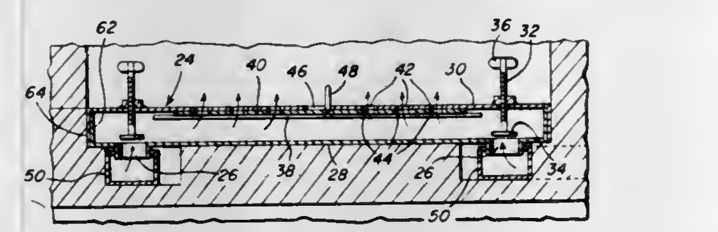

1. In combination with a building having a fireplace opening into one room of the building and with the fireplace having a glass or similar material door operatively associated with the opening thereof in a manner to substantially prevent the entrance of room air into the fireplace, said fireplace including a hearth, an elongated hearth supported hollow housing disposed in said fireplace inwardly of said door and extending across the fireplace opening, said housing including a plurality of outlet openings spaced therealong and including damper means for variably opening and closing said outlet openings, the opposite ends of said housing including air inlet openings and valve structure operatively associated with said inlet openings for variably closing the latter, air inlet duct structures including outlet ends communicated with said inlet openings and inlet ends opening to the exterior of the building in which said fireplace is disposed through different exterior sides of said fireplace, said housing being recessed within said hearth and said inlet openings of said housing opening upwardly through an upper portion of said housing, said housing inlet openings opening downwardly through downwardly projecting tubular inlet nipples supported from the opposite ends of the lower portion of said housing, said valve structures including valve members threadedly supported from said housing upper portion and vertically adjustable downwardly toward and away from the upper ends of said tubular nipples through the upper portion of said housing, said outlet ends of said inlet duct structures underlying said opposite ends of said housing and having upwardly facing openings formed therein downwardly through which said nipples project into said inlet duct structures.

4,372,289
FLUE BOX ASSEMBLY
Craig D. Funke, 14640 Chicago Rd., Dalton, Ill. 60419
Filed May 22, 1980, Ser. No. 149,849
Int. Cl.³ F23L *11/00, 13/00*
U.S. Cl. 126—292 **8 Claims**

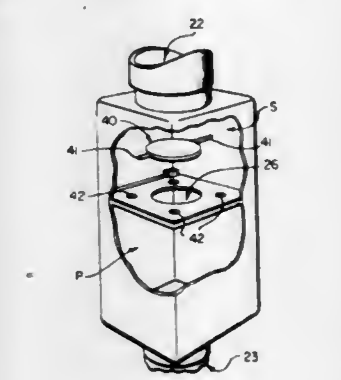

1. In a flue box assembly for conserving fuel consumption in conjunction with a heating plant having a housing with an interior diametric opening substantially greater than the exhaust gas inlet to and outlet from the interior of the housing, a damper means having a flue opening diametrically smaller than either the inlet or the outlet apertures to the housing, said damper means being pivotally mounted within said housing to permit movement of said damper means between a closed position overlying said inlet aperture and an open position; the improvement comprising:
at least one bore in said damper means disposed radially outwardly from said flue opening for enhancing the draft of unburned fuel vapors during start up of the heating plant, wherein the combined area of the bore and the flue opening is smaller than the area of the inlet or the outlet to the housing, thereby eliminating stratification of high concentrations of fuel mixture during start up of the heating plant.

4,372,290
GAS BURNER HEAD WITH MEANS FOR EVACUATING TRAPPED WATER CONDENSATE
Charles D. Visos, Manchester, and James M. Ferguson, St. Louis, both of Mo., assignors to Emerson Electric Co., St. Louis, Mo.
Filed Sep. 5, 1980, Ser. No. 184,197
Int. Cl.³ F24H *1/10*
U.S. Cl. 126—355 **1 Claim**

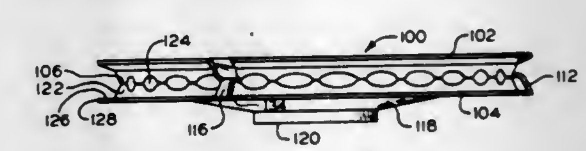

1. In a gas burner head wherein the burner head includes a generally concave circular top portion having a central portion, a peripheral portion, and a corrugated portion therebetween comprising a plurality of circumferentially spaced depressions; wherein the burner head further includes a circular

bottom portion having a central portion, a peripheral portion, and a corrugated portion therebetween comprising a plurality of circumferentially spaced depressions; wherein the depressions of the top and bottom portions cooperate to define a plurality of outlet ports for a burner flame; wherein the burner head is positioned below and in axial alignment with the flue of a water heater; and wherein the burner head is susceptible to water dripping into the top portion thereof and accumulating therein, the water being caused by condensation of the water vapor content of the flue gas on the walls of the flue, the improvement comprising means formed by cutting of the peripheral portion of the top portion at one or more of the depressions therein for enabling the accumulated water to flow out of said top portion, and means in the peripheral portion of the bottom portion which cooperate with said means in said peripheral portion of said top portion for preventing said flow of water from adhering to said bottom portion, whereby the burner flame at the outlet ports is not adversely affected by said flow of water, wherein said means formed by cutting of said peripheral portion of said top portion comprises one or more tabs bent downwardly, wherein the diameters of said top portion and said bottom portion are the same, wherein said peripheral portion of said bottom portion comprises a generally flat portion, and wherein said means in said peripheral portion of said bottom portion comprises one or more openings, each said opening being located directly beneath each said tab and spaced therefrom.

4,372,291
SOLAR HEAT EXCHANGER
David M. Schwartz, Washington, D.C.
Filed Nov. 9, 1979, Ser. No. 93,002
Int. Cl.³ F24J *3/02*
U.S. Cl. 126—443 **16 Claims**

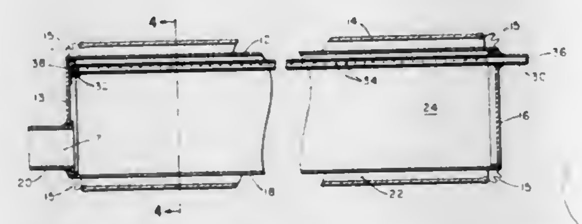

1. A solar heat exchanger for vaporizing within the exchanger virtually all feed liquid heat transfer medium which enters the exchanger by utilizing solar light energy as the heating source, said solar heat exchanger comprising:

a closed metal boiler tube wherein vaporization of feed liquid entering the exchanger occurs, said metal tube coated with heat absorbent coating and having an inlet opening for admitting the feed liquid into the metal boiler tube and an outlet opening for passing the vaporized product from the metal boiler tube,

a transparent glass tube enclosing the metal tube and forming an annular space between the glass tube and the metal boiler tube, said annular space evacuated to vacuum pressure, and

a spray tube of small diameter relative to the diameter of the metal boiler tube, said spray tube located within the metal boiler tube and having a plurality of spray orifices in close proximity to each other placed along the length of the spray tube, one end of said spray tube being in communication with said inlet opening of said metal boiler tube, said feed liquid entering said exchanger at a pressure sufficient to produce a continuous spray of said feed liquid through the spray orifices of said spray tube, said spray continuously impacting against the inside surface of said metal boiler tube to improve the rate of heat transfer to the feed liquid so that virtually all the liquid entering the metal boiler tube is converted to vapor within said metal boiler tube.

4,372,292
METHOD AND APPARATUS FOR CONSTRUCTION OF A SOLAR COLLECTOR
Sterling L. Ort, R.D. #1, Box #14, Lewisberry, Pa. 17339
Filed Apr. 14, 1981, Ser. No. 254,054
Int. Cl.³ F24J *3/02;* **E06C** *2/38*
U.S. Cl. 126—450 **10 Claims**

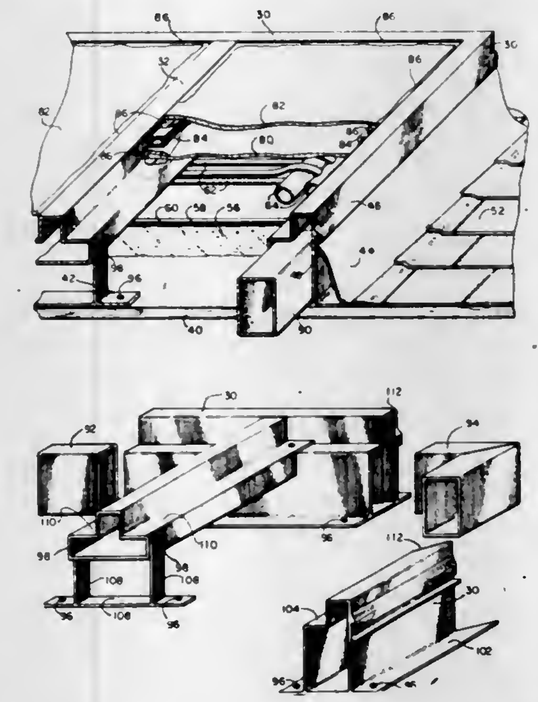

1. A solar collector having a liquid heat transfer fluid carrying means exposable to solar radiation and connectable to a heat transfer fluid circulating system, the collector comprising:

at least one layer of transparent material positioned above an air space over the liquid heat transfer fluid carrying means, for insulating and sealing the heat transfer fluid carrying means from ambient conditions;

a plurality of outer frame members for bearing the transparent material and for enclosing and sealing the heat transfer fluid carrying means from ambient conditions, about its perimeter, each outer frame member having means for attachment to a collector-bearing structure and comprising, in cross-section, at least one inner and at least one outer vertical wall section providing abutment surfaces against lateral movement and at least one upper and at least one lower horizontal section providing abutment surfaces against vertical movement, the at least four abutment surfaces defining an interconnection opening for positively aligning and joining the outer frame members;

a plurality of interconnection members, each dimensioned to be fitted longitudinally into the interconnection openings of adjacent outer frame members, whereby all of the outer frame members may be positively and permanently aligned and interconnected by the interconnection members.

4,372,293
APPARATUS AND METHOD FOR SURGICAL CORRECTION OF PTOTIC BREASTS
Cesar A. Vijil-Rosales, 5642 Indigo, Houston, Tex. 77096
Filed Dec. 24, 1980, Ser. No. 219,670
Int. Cl.³ A61B *19/00*
U.S. Cl. 128—1 R **10 Claims**

1. A method of repairing ptosis of the breast and other defects of a mammary gland, comprising:

attaching the lower end of a ribbon of physiologically inert mesh to the tissue of the mammary gland;

conducting the ribbon beneath the surface of the skin upward to a predetermined area of the fascia or the skeletal structure above the mammary, and;

attaching the upper end of the ribbon to the skeletal structure or the fasica above the mammary, the ribbon being suffi-

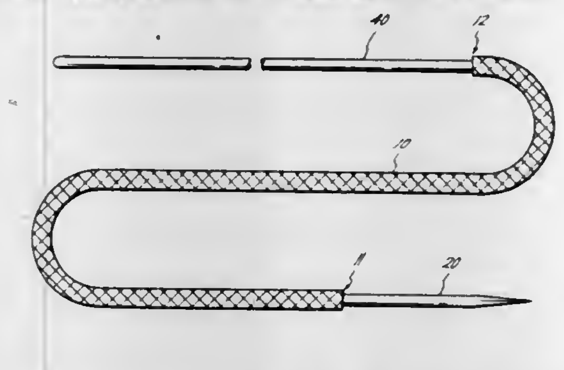

ciently taut to impede the fall of the breast below a predetermined position.

4,372,294
METHOD AND APPARATUS FOR RADIOLABELING RED BLOOD CELLS
Harry W. Strauss, Newton; Ronald J. Callahan, Boston, and Jerry W. Froelich, Woburn, all of Mass., assignors to The Massachusetts General Hospital, Boston, Mass.
Filed Sep. 25, 1980, Ser. No. 190,667
Int. Cl.³ A61B *6/00*
U.S. Cl. 128—1.1 **4 Claims**

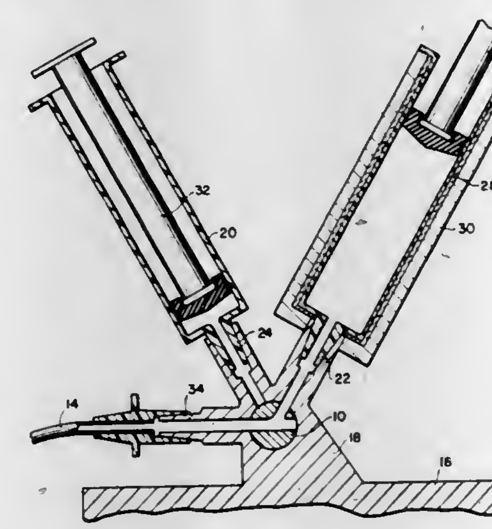

1. The process for labeling with technetium-99m red blood cells of a patient en vivo which comprises serially and continuously administering to said patient a non-toxic stannous composition capable of reducing technetium, withdrawing a blood sample from said patient through a catheter containing heparin and into a vial containing technetium-99m as pertechnetate, incubating a mixture of said blood sample and said pertechnetate until substantially all of said pertechnetate is bound to the red blood cells in said sample, filling said catheter with heparin and injecting the incubated sample through said catheter containing heparin into said patient.

4,372,295
ENDOSCOPES
Helmut Heckele, Knittlingen, Fed. Rep. of Germany, assignor to Richard Wolf GmbH, Knittlingen, Fed. Rep. of Germany
Filed May 19, 1980, Ser. No. 151,304
Claims priority, application Fed. Rep. of Germany, May 25, 1979, 7915282[U]
Int. Cl.³ A61B *1/00*
U.S. Cl. 128—4 **5 Claims**

1. An endoscope having a hollow shaft receiving a flexible ancillary instrument passed therethrough with the distal end of said instrument projecting from the distal end of said shaft, and means for flexibly displacing said distal end of said instrument at different selective angles, wherein said means comprises two rods which pass through said shaft parallel to the longitudinal axis thereof and are joined together into a U-shape at their distal end, said distal end of said rods being bent over at an angle downwardly away from said axis of said shaft to bear against and force downwardly at an angle the upper side of said distal end of said instrument distally projecting from said endoscope shaft when in position, said rods being connected to a slider in the proximal end of said endoscope shaft, said slider being displaceable parallel to said longitudinal axis of said shaft

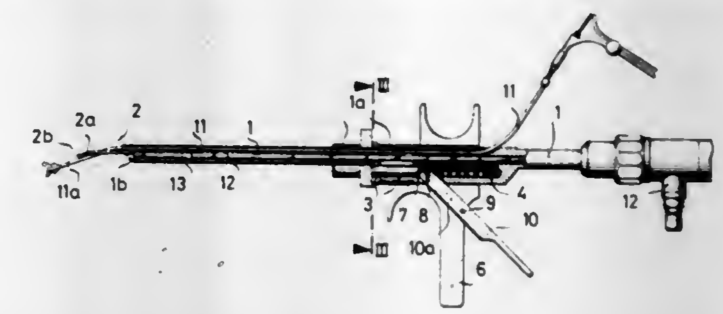

towards the proximal end against a spring by means of an external handle and which displacement of the slider moves said U-shape distal end of the rods closer to the distal end of said shaft along the upper side of the distal end of said instrument, resulting in the distal end of said instrument outward of the distal end of said shaft acquiring an increased angular setting downward.

4,372,296
TREATMENT OF ACNE AND SKIN DISORDERS AND COMPOSITIONS THEREFOR
Mostafa S. Fahim, 500 Hulen Dr., Columbia, Mo. 65201
Filed Nov. 26, 1980, Ser. No. 210,370
Int. Cl.³ A61H *23/00*
U.S. Cl. 128—24 A **3 Claims**

1. A method for treating acne comprising topically administering with ultrasonic vibrations at a frequency between 1000 KHZ and 3000 KHZ and at a power level between 0.5 and 3.0 watts per sq. cm. to acne affected skin an effective amount of a composition comprising from about 1.0 to about 4.0 percent by weight of zinc sulfate and from about 2.0 to about 6.0 percent by weight of ascorbic acid in a pharmaceutical carrier which is an effective coupling agent for ultrasonic vibrations and which does not inactivate the pharmacological activity of the zinc salt or ascorbic acid whereby said composition effectively retards the rate of sebum secretion in the treated area and stimulates the production of collagen.

4,372,297
COMPRESSION DEVICE
Alfred R. Perlin, Highland Park, Ill., assignor to The Kendall Company, Boston, Mass.
Filed Nov. 28, 1980, Ser. No. 210,889
Int. Cl.³ A61H *1/00*
U.S. Cl. 128—64 **12 Claims**

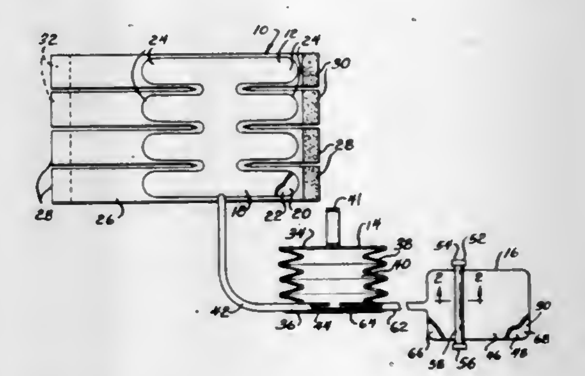

1. A compression device, comprising:

a sleeve for placement about a patient's limb, said sleeve having an inflatable chamber;

a pump communicating with said chamber for inflating the chamber;
a bladder having an inflatable cavity communicating directly with the pump; and
means for adjusting the effective volume of said bladder cavity which communicates with said pump.

4,372,298
KNEE BRACE
Max Lerman, Beverly Hills, Calif., assignor to U.S. Manufacturing Co., Pasadena, Calif.
Filed Jul. 20, 1981, Ser. No. 285,424
Int. Cl.³ A61F *3/00*
U.S. Cl. 128—80 C **16 Claims**

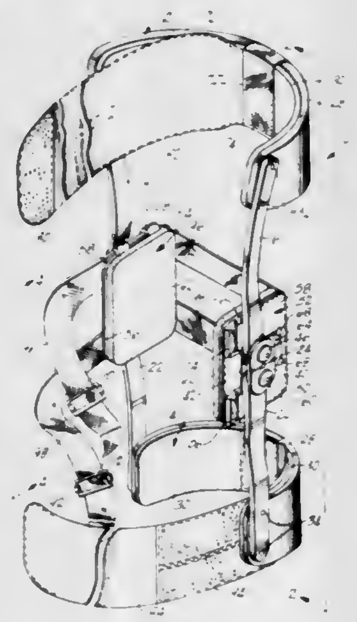

1. A knee brace comprising:
upper and lower limb support members;
means for securing the upper and lower limb support members to the upper and lower legs above and below the knee joint;
a pair of upper support arms extending down from the upper limb support member for extending along opposite sides of the upper leg to remote ends adjacent lateral and medial sides of the knee joint;
a pair of lower support arms extending upwardly from the lower limb support member for extending along opposite sides of the lower leg toward remote ends adjacent lateral and medial sides of the knee joint;
lateral and medial pivot means interconnecting the remote ends of the upper support arms with the remote ends of corresponding lower support arms for providing relative pivotal movement of the upper and lower support arms adjacent the lateral and medial sides of the knee joint, said pivotal movement being about a generally horizontal axis, the lateral and medial pivot means each having a fixed portion adjacent lateral and medial sides of the knee joint so the corresponding upper and lower support arms pivot relative to the fixed portions of the pivot means;
lateral and medial condyle pads for contacting lateral and medial sides of the knee joint; and
lateral and medial hinge means affixed to the lateral and medial condyle pads and hinged to the fixed portions of the lateral and medial pivot means for mounting the condyle pads between the lateral and medial pivot means, so the condyle pads can be placed in direct contact with the lateral and medial sides of the knee joint, the lateral and medial hinge means allowing the lateral and medial condyle pads to each pivot through an angle relative to the fixed portions of the pivot means and about a generally vertical axis toward and away from each other, such pivotal movement of the condyle pads being within the space between the lateral and medial pivot means.

4,372,299
ABDUCTION PILLOW WITH STORAGE CAVITY
Irving E. Fixel, 111 N. 31st Ave., Hollywood, Fla. 33021
Continuation of Ser. No. 75,498, Sep. 13, 1979, abandoned. This application Sep. 8, 1981, Ser. No. 299,972
Int. Cl.³ A61F *5/00*
U.S. Cl. 128—80 A **4 Claims**

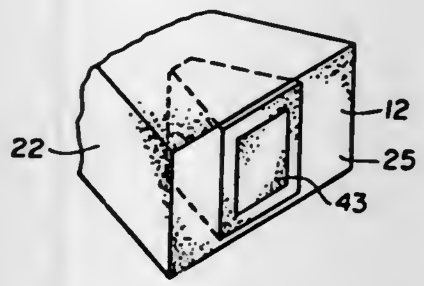

1. An improved abduction pillow adapted for use with a patient recovering from medical surgery for immobilizing the patient's legs and hips comprising:
a pillow made from foam having a substantially constant thickness, said pillow comprising a first piece having a substantially triangular shape and a second piece having a substantially truncated triangular shape, fastening means for removably connecting said first piece to said second piece whereby said first piece may be disconnected from said second piece and thereafter said first piece may be reconnected to said second piece, a cavity in said second piece having the shape of said first piece, and a spare first piece inserted within said cavity and being removable therefrom, said spare first piece being removably connectable to said truncated end of said second piece.

4,372,300
CAST WEDGE
Denis B. Drennan, Evanston; Donald J. Maylahn, Skokie, and Thomas R. Schleicher, Wilmette, all of Ill., assignors to DM Systems, Inc., Evanston, Ill.
Filed May 13, 1981, Ser. No. 263,264
Int. Cl.³ A61F *5/04*
U.S. Cl. 128—83 **12 Claims**

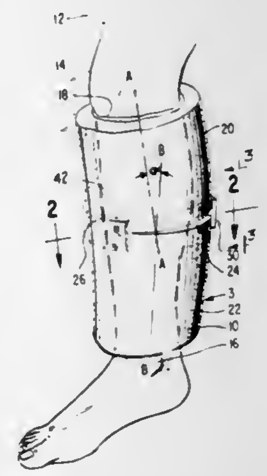

1. A wedge for use with a tubular cast for maintaining a space between opposite facing edges formed by a transverse cut in said cast, comprising:
a body formed of molded plastic material having opposite edges spaced a predetermined distance apart for engagement, with said facing cut edges of said cast; and
flange means extending normal to said opposite edges and outwardly thereof having a face engageable with an outer surface of said cast adjacent said cut edges for limiting the inward movement of said body into said cast,

said body and said flange means having pairs of substantially coplanar opposite side surfaces normal to said face of said flange means and normal to said opposite edges of said body whereby said body is visible from a side during insertion into a cut in a cast.

4,372,301
ARM SLING
Vance M. Hubbard, Euless, and Welton K. Brunson, Bedford, both of Tex., assignors to Tecnol, Inc., Fort Worth, Tex.
Filed Apr. 14, 1981, Ser. No. 254,192
Int. Cl.³ A61F *5/40*
U.S. Cl. 128—94 **11 Claims**

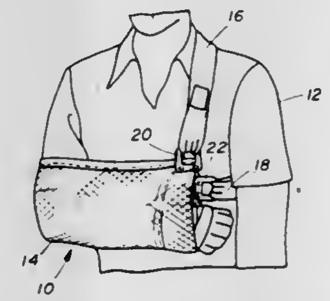

1. An arm sling for a person comprising a sling trough of a predetermined unfolded length for supporting a forearm, said sling trough having first and second ends, said first end closed for allowing the elbow of the arm to abut the closed end, said trough being constructed of flexible material for allowing the second end to be folded towards the first end for shortening the length of said sling trough for providing a sling of a desired length;
a support strap secured to said first end, said support strap of sufficient length for traversing the back and the shoulder opposite the arm which is in the sling and extend to the top portion of said sling trough adjacent the second end of said sling trough;
fastener means for securing said support strap to said sling trough adjacent the second end of said sling trough including a first member having a first aperture therein for allowing said support strap to be passed therethrough, a second member hinged to said first member, said second member having a first aperture for allowing said support strap to be passed therethrough and;
means for securing said first and second members in superimposed relationship including at least one pin means extending from said first member, said second member having a hole complimentary with said pin means, said pin means engagable in a mating force fit relationship with said hole when said first and second members are superimposed and said pin means is inserted in said hole.

4,372,302
INSTRUMENT FOR RETRIEVAL OF RETRACTED THREADS OF INTRAUTERINE CONTRACEPTIVE DEVICES
Mats Akerlund, Lund, Sweden, assignor to AB Myometricon, Sweden
Filed Apr. 6, 1981, Ser. No. 250,927
Claims priority, application Sweden, Apr. 9, 1980, 8002692
Int. Cl.³ A61F *5/46*
U.S. Cl. 128—130 **4 Claims**

1. An instrument for retrieval of retracted threads of an intrauterine device within a uterus, comprising a relatively stiff handle and a flexible distal part integral therewith, said distal part having a rounded cross-section and being provided with a plurality of notches spaced along its length for gripping the retracted threads during insertion and turning of the instrument within the uterus, wherein the improvement comprises that the distal part is curved so as to form a concave surface

and that the notches are provided on said concave surface of said curved distal part.

4,372,303
BANDAGE FRAME AND METHOD
Frederic Grossmann, Lake Forest, Ill., and Larry A. Sims, Hermosa Beach, Calif., assignors to American Hospital Supply Corporation, Evanston, Ill.
Filed Sep. 11, 1980, Ser. No. 186,351
Int. Cl.³ A61F *13/00*
U.S. Cl. 128—132 D **28 Claims**

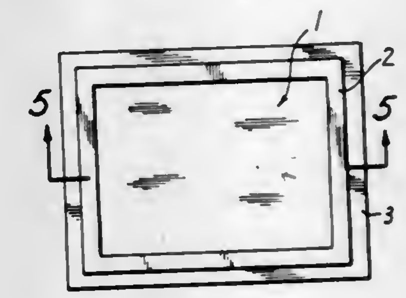

1. A system for bandaging a patient comprising:
a flexible bandage having a backing with an adhesive on a surface thereof for applying to a patient; and
a frame means which is substantially less flexible than the bandage and is attachable to the backing thereof for maintaining said bandage in a generally flat configuration and for controlling wrinkling during handling and application of the bandage to the patient when attached thereto;
whereby the bandage may resume its flexible nature after application to the patient and removal of the frame means, so as not to interfere with the flexible functioning of the bandage on the patient's anatomy.

4,372,304
FLOW CONTROL SYSTEM AND RESTRICTOR FOR USE THEREIN
Emik A. Avakian, Springfield, Mass., and Souren Avakian, Westport, Conn., assignors to Centaur Sciences, Inc., Stamford, Conn.
Filed Oct. 15, 1980, Ser. No. 197,272
Int. Cl.³ A61M *5/00*
U.S. Cl. 128—214 E **22 Claims**

1. A control for regulating the flow of a liquid through a compressible tube, said control operating in cooperation with a drop sensor which provides output signals commensurate with

the flow of fluid from a reservoir into the tube, said control comprising:

restrictor means for applying a variable compressive force to a tube through which the flow is to be regulated, said restrictor means including:

adapter means, said adapter means having a first passage extending therethrough, said first passage being sized and shaped to receive the tube, said adapter means further defining a second passage which is transverse to and intersects said first passage, said second passage extending from a first side of said adapter means to said first passage;

plunger means, said plunger means having a housing which defines an internal chamber, said plunger means including a plunger movable longitudinally within said chamber, said plunger having a portion which extends outwardly through the first wall of said housing, said housing further defining a holder on the exterior of said first wall, said holder receiving and supporting said adapter means with said first side of said adapter means facing said first wall of said plunger means housing and with said plunger in registration with said adapter means second passage;

motor means, said motor means having a rotatable output shaft; and

means coupling said motor means output shaft to said plunger means plunger, said coupling means extending

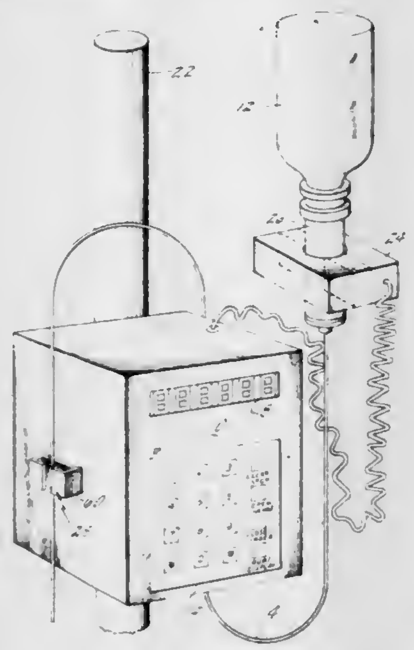

into said plunger means housing defined chamber and converting the motor means output shaft rotory motion to longitudinal motion of said plunger;

computer means, said computer means including a program memory and a scratchpad memory, said computer means having a stored program comprising instructions for producing output signals commensurate with flow rate errors and volume yet to be delivered through the tube;

keyboard means for generating command signals and data signals commensurate with a desired flow rate and quantity, said keyboard means being connected to said computer means whereby the generated command and data signals may be supplied to said computer means;

means delivering the drop sensor output signals to said computer means whereby said computer means may compare actual and desired flow rates and generate first error signals as a result of said comparison and whereby said computer means may determine the volume of fluid delivered through the tube and compare the delivered volume with the desired volume and generate second error signals when the total desired volume has been delivered through the tube; and

means applying said computer means generated error signals to said restrictor means motor means whereby the tube will be compressed to a degree commensurate with the desired flow rate in response to the said first error signals and will be compressed to a point where flow is prevented in response to the said second error signals.

4,372,305

METHOD OF TREATING DISEASED ORGAN

Harold W. Fogle, 2866 Crownview Dr., Rancho Palos Verdes, Calif. 90274

Filed Jan. 2, 1981, Ser. No. 222,251

Int. Cl.³ A61M *1/03*

U.S. Cl. 128—214 B **15 Claims**

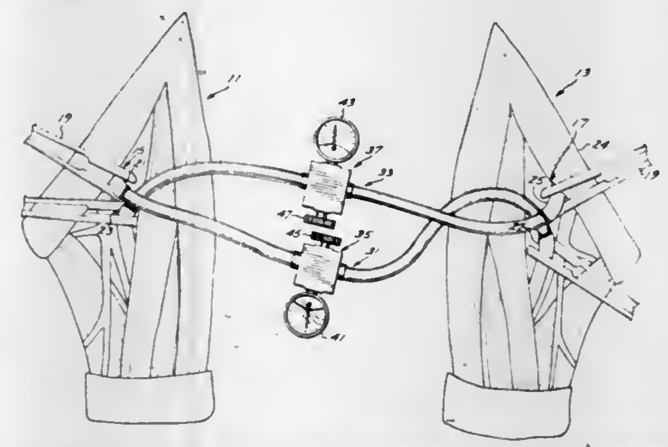

1. A method of treating a diseased organ or organ system of a patient, comprising the following steps:

establishing the blood type of said diseased patient;

selecting a healthy host having blood which is the same type as that of said patient and which matches with that of said patient;

making surgical incisions to expose major arteries of said host and patient;

surgically opening said arteries;

selecting first and second tubes for accomodating substantially complete blood flow between said arteries;

connecting said first tube between the proximal end of such host artery and the distal end of such patient artery;

connecting said second tube between the distal end of such host artery and the proximal end of such patient artery;

maintaining substantially equal rates of continuous blood flow from said proximal end of such host artery, through said first tube, to said distal end of such patient artery and from said proximal end of such patient artery to said distal end of such host artery to establish, for a selected period of time, flow of a homogeneous mixture of host blood with patient blood in the body of said patient to communicate said homogeneous mixture to said diseased organ or organ system;

removing said tubes;

closing said openings in said respective arteries;

closing said incisions whereby said homogeneous flow of blood of the host and patient is communicated to the cells of said diseased organ or organ system for treatment thereof for said period of time.

4,372,306

EQUIPMENT SETS HAVING A COMBINED AIR BARRIER AND LIQUID SEQUENCING DEVICE FOR THE SEQUENTIAL ADMINISTRATION OF MEDICAL LIQUIDS AT DUAL FLOW RATES

Joseph N. Genese, Waukegan, and Andrew J. Muetterties, Mundelein, both of Ill., assignors to Abbott Laboratories, North Chicago, Ill.

Continuation-in-part of Ser. No. 16,461, Feb. 28, 1979, Pat. No. 4,256,104, Ser. No. 157,922, Jun. 9, 1980, Pat. No. 4,324,238, and Ser. No. 167,948, Jul. 14, 1980, Pat. No. 4,316,460. This application Jan. 26, 1981, Ser. No. 228,632

Int. Cl.³ A61M *5/14*

U.S. Cl. 128—214 G **11 Claims**

1. A gravitational flow system for the sequential administration of medical liquids to a patient comprising:

a primary container suspended in space for containing a primary medical liquid;

a primary tube having its distal end in fluid communication with said primary container;

a secondary container suspended in space at a height greater than that of said primary container for containing a secondary medical liquid;

a secondary tube having its distal end in fluid communication with said secondary container;

a common tube having its distal end in fluid communication with the proximal ends of said primary and secondary tubes and its proximal end open for the flow of liquid therethrough to form a primary liquid path comprising said primary tube and said common tube and a secondary liquid flow path comprising said secondary tube and said common tube;

secondary flow control means in said secondary liquid flow path for adjusting the flow rate of said secondary liquid therethrough;

primary flow control means on said primary tube for adjusting the flow of said primary liquid through said primary liquid

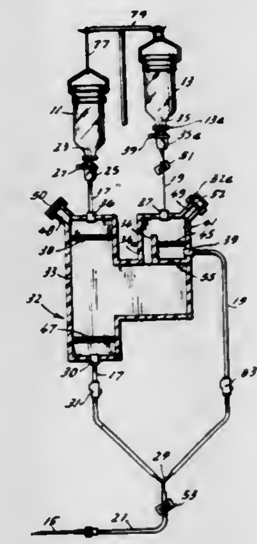

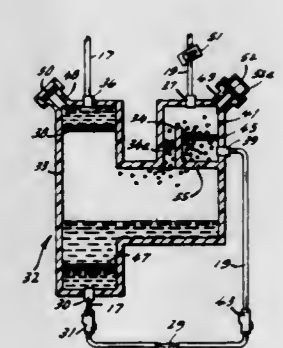

flow path at a rate independent of the flow rate of said secondary liquid through said secondary liquid flow path;

a combined air barrier and liquid sequencing valve interposed in said primary and secondary flow paths which allows primary liquid to flow from said primary container whenever the height of said primary liquid is greater than or equal to the height of said secondary liquid in said system and which prevents primary liquid from flowing from said primary container whenever the height of said primary liquid is less than the height of said secondary liquid in said system;

said combined air barrier and liquid sequencing valve comprising a housing divided into two or more parallel chambers, at the top thereof a first chamber in said housing having an inlet port incorporated therein for the passage of primary liquid into said first chamber, said inlet port having a hydrophilic membrane incorporated therein and covered thereby, and an outlet port incorporated therein for the passage of liquid from said first chamber, said outlet port from said first chamber including a hydrophilic membrane incorporated therein and covered thereby for preventing the passage of air from said first chamber through said outlet port when said hydrophilic membrane is moistened;

a second chamber in said housing having an inlet port to said second chamber at the top thereof for the admission of secondary liquid therein and an outlet port from said second chamber for the passage of secondary liquid therefrom, said outlet port from said second chamber including a second hydrophilic membrane incorporated therein for preventing the passage of air therethrough; and

an air capturing pocket proximate said hydrophilic membrane covering said inlet port to said first chamber, said air capturing pocket comprising the area beneath said hydrophilic membrane covering said inlet port to said first chamber, the sides of said air capturing pocket being defined by the side walls of said first chamber proximate the top of said first chamber, said air capturing pocket being constructed and arranged for the reception of residual air within said first chamber proximate said hydrophilic membrane when said secondary liquid is dispensed into said second chamber whereby the flow of said primary liquid is interrupted for so long as the pressure of said secondary liquid is greater than that of said primary liquid.

4,372,307

PINCH VALVE SYRINGE

Frank A. Betush, Carson, Calif., assignor to Progressive Machine Products, Inc., Carson, Calif.

Filed Jul. 6, 1981, Ser. No. 280,307

Int. Cl.³ A61M *3/00*

U.S. Cl. 128—224 **4 Claims**

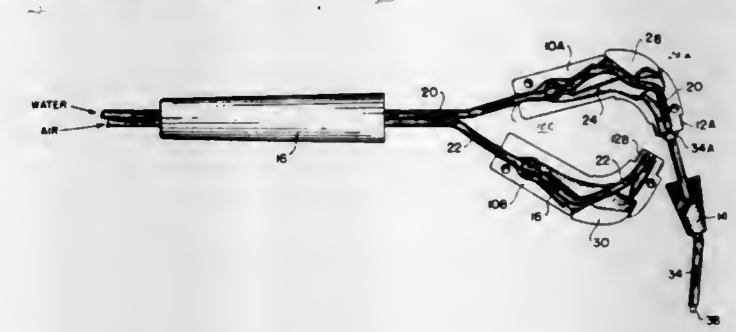

1. A unit for controlling the flow of a fluid including: a body having first and second longitudinal sections; a first elongated resilient strip mounted in the first section of said body and bent back on itself to define a first pinch area; a first resilient tube extending through the first resilient strip and across said first pinch area to be pinched by said first resilient strip; a second elongated resilient strip mounted in the second section of said body and bent back on itself to define a second pinch area; a second resilient tube extending through the second resilient strip and across the second pinch area to be pinched by said second resilient strip; a nozzle mounted on one end of said body and including a coaxial rigid tube; with one end of said first resilient tube being fitted over one end of said rigid tube; and a nut threaded to said one end of said body in coaxial relationship with said nozzle to hold the first and second longitudinal sections together and to cause said sections to clamp and seal the first resilient tube to said one end of said rigid tube; each of said resilient strips having a free end; first and second actuating buttons respectively formed on the free ends of said resilient strips; the two sections of said body also being formed to clamp and seal the second resilient tube against the end of said nozzle when the nut is tightened, to enable the second resilient tube to emit fluid into the annular portion of said nozzle surrounding said rigid tube.

4,372,308
OSTOMY BAG INCLUDING FILTER MEANS
Peter L. Steer, and John V. Edwards, both of East Grinstead, England, assignors to Kingsdown Medical Consultants Ltd., London, England
Filed Jul. 10, 1978, Ser. No. 923,127
Int. Cl.³ A61F *5/44*
U.S. Cl. 128—283 **6 Claims**

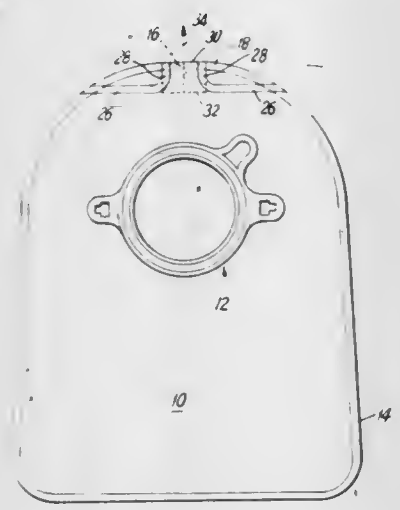

1. An ostomy bag formed by a front wall and a rear wall both of plastics material welded together around their periphery except at a portion of one edge which is at the top of the bag when it is in normal use, filtering means comprising a flat hollow housing the interior of which is provided with filtering material, said housing is formed from synthetic plastics material and is a thin substantially rectangular block whose long sides intersect at both ends of said block to form tapers when said block is viewed in section parallel to the gas path therethrough, said housing having a plurality of holes therethrough leading from the interior to the exterior of said bag, said bag walls being welded to the long sides of said housing so as to form a gas tight seal at the top edge of said bag, and said rear bag wall having an opening adapted to receive the stoma of the user.

4,372,309
MOISTURE ABSORBENT PAD
George B. Fowler, Worcester, England, assignor to Humanicare International Inc., New Brunswick, N.J.
Filed Nov. 10, 1980, Ser. No. 205,720
Claims priority, application United Kingdom, Jul. 19, 1980, 8023685
Int. Cl.³ A61F *13/16*
U.S. Cl. 128—284 **11 Claims**

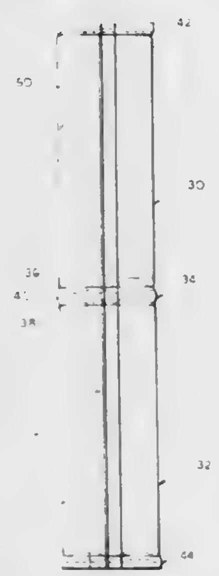

1. A pad of the type adapted to be situated in an incontinence garment or the like, said pad comprising first and second moisture absorbent parts and means for flexibly connecting said parts end-to-end, said connecting means being adapted to permit alignment of the parts in substantially face-to-face relation and comprising a substantially non-moisture absorbent graspable portion, said portion being accessible when said parts are in face-to-face relation and adapted to facilitate removal of the pad from a garment without substantial contact with said moisture absorbent parts.

4,372,310
DIAPER WITH BLENDED YARNS
Timothy L. Sergeant, Seneca, S.C., assignor to The Kendall Company, Boston, Mass.
Filed Jul. 30, 1981, Ser. No. 288,637
Int. Cl.³ A41B *13/02*
U.S. Cl. 128—284 **7 Claims**

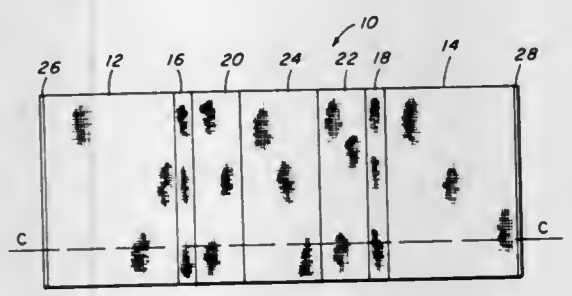

1. A multi-paneled diaper of zoned construction, said diaper containing at least one panel comprising absorbent filling yarns and warp yarns consisting of a blend of hydrophobic fibers and hydrophilic fibers.

4,372,311
DISPOSABLE ARTICLES COATED WITH DEGRADABLE WATER INSOLUBLE POLYMERS
James E. Potts, Bernards Township, Morris County, N.J., assignor to Union Carbide Corporation, Danbury, Conn.
Filed Sep. 12, 1980, Ser. No. 186,429
Int. Cl.³ A61L *15/00;* A61F *13/16;* B32B *23/08*
U.S. Cl. 128—287 **22 Claims**

12. A disposable article containing a poly(ethylene oxide) polymer, a surface of the article containing such polymer coated with a degradable water-insoluble polymer.

4,372,312
ABSORBENT PAD INCLUDING A MICROFIBROUS WEB
Eleanor J. Fendler, and Leo J. Bernardin, both of Appleton, Wis., assignors to Kimberly-Clark Corporation, Neenah, Wis.
Filed May 26, 1981, Ser. No. 266,795
Int. Cl.³ A61F *13/16*
U.S. Cl. 128—290 R **10 Claims**

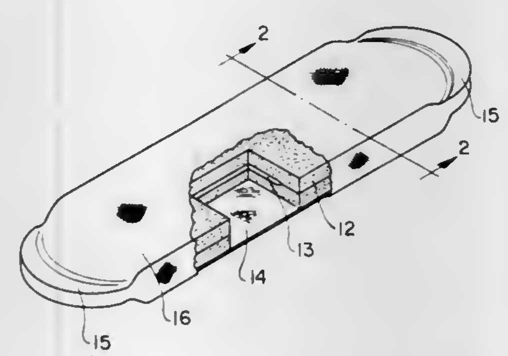

1. An absorbent pad containing a nonwoven thermoplastic surfactant-treated filamentary microfibrous web, a fluid pervious cover and an absorbent component between said baffle and said cover, said microfibrous web forming at least part of said absorbent component.

4,372,313
BODY DRAINAGE RECEPTACLE WITH ANTI-SEPTIC CATHETER CONTACT SURFACE IN RECEIVING POCKET
Frank K. Villari, Oak Park, and James P. Cianci, Cary, both of Ill., assignors to The Kendall Company, Boston, Mass.
Division of Ser. No. 139,301, Apr. 11, 1980, Pat. No. 4,333,480. This application Aug. 17, 1981, Ser. No. 293,544
Int. Cl.³ A61F *5/44*
U.S. Cl. 128—295 **7 Claims**

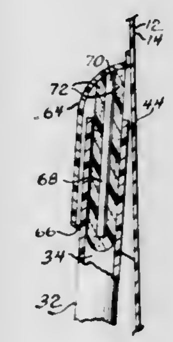

1. A urine receptacle, comprising:
a container having a chamber for collection of urine, and a pocket on an outer surface of the container, said pocket having an open end;
a tubular section having an inner end attached to a lower portion of the container and communicating with said chamber, and an outer end; and
an elongated projection means extending from the container and secured in said pocket and being removably receivable in a lumen of the tubular section in said outer end in a storage position of the tubular section in said pocket, said projection means having means for contacting an inner surface of the tubular section and for retaining an antimicrobial agent.

4,372,314
DENTAL SPONGE
W. Henry Wall, 2300 Henderson Mill Rd., Atlanta, Ga. 30345
Filed Sep. 15, 1980, Ser. No. 186,903
Int. Cl.³ A61F *13/00*
U.S. Cl. 128—296 **3 Claims**

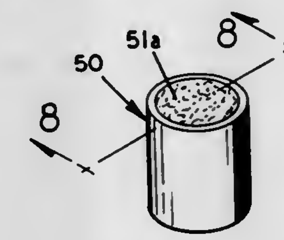

1. A dental sponge for controlling bleeding from a wound in the mouth and preventing saliva from contacting said wound comprising a cylindrical absorbent member including a hemostatic agent, and a saliva-resistant plastic film encircling the cylindrical surface of said absorbent member, said absorbent member being exposed at at its ends.

4,372,315
IMPEDANCE SENSING EPILATOR
Julius Shapiro, Reading, Pa., and Andrew Eliason, Falmouth, Mass., assignors to Hair Free Centers, Reading, Pa.
Filed Jul. 3, 1980, Ser. No. 165,669
Int. Cl.³ A61B *17/41*
U.S. Cl. 128—303.18 **9 Claims**

1. In an epilator of the type which includes RF generator means, timing circuit means linked to said generator means for gating the output of said generator means into a series of RF energy pulses and probe means which receives the RF energy pulses, said probe means having a tip including a needle adapted to be inserted into a hair follicle of a subject undergoing epilation, the improvement comprising:
(a) sensing means, operative during the initial portion of a given pulse of RF energy, including a forward and reflected power bridge, for sensing the impedance actually perceived by the probe means tip, said bridge generating a control signal which is proportional to said sensed impedance; and,

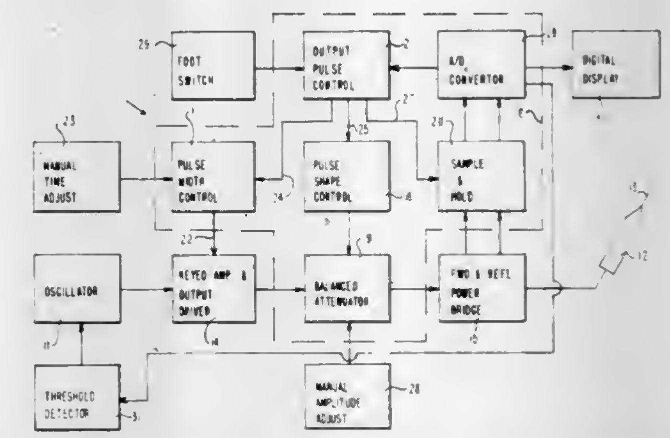

(b) control means, operative during the balance of said pulse, for automatically adjusting at least one pulse parameter, independently selected from the group consisting of duration and amplitude, responsive to said control signal;
whereby the amount of energy absorbed by the subject via the needle has a value per pulse which is adjusted around a preset value as a function of sensed impedance.

4,372,316
SURGICAL DEVICE
Joseph W. Blake, III, R.R. #2, Box 106, Kitchewan Rd., South Salem, N.Y. 10590, and Jack W. Kaufman, 357 Frankel Blvd., Merrick, N.Y. 11566
Continuation of Ser. No. 63,268, Aug. 2, 1979, Pat. No. 4,296,751. This application Oct. 24, 1980, Ser. No. 200,407
Int. Cl.³ A61B *17/12*
U.S. Cl. 128—325 **10 Claims**

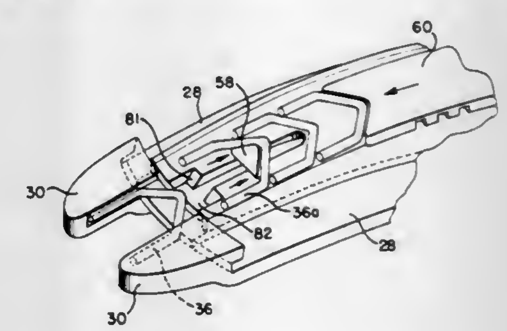

7. A cartridge for use with a surgical device, particularly for use with hemostatic forceps, comprising
a housing having a track provided with an outlet;
means for advancing a string of surgical clips in direction towards said outlet so that the respectively leading clips of the string are sequentially discharged from the outlet to become cinched by jaws of the surgical device;
means for retracting the clips located upstream of the respective leading clip counter to said direction and away from said outlet prior to cinching of the discharged leading clip, so as to avoid interference by the upstream clips with such cinching; and
means maintaining said housing stationary while said clips are being retracted.

4,372,317
METHOD OF INSTALLING A SCALP ANCHOR FOR A HAIRPIECE
Jack Baumann, Los Angeles, Calif., assignor to Look International Enterprises, Inc., San Francisco, Calif.
Division of Ser. No. 625,383, Oct. 24, 1975. This application Nov. 22, 1976, Ser. No. 744,151
Int. Cl.[3] A61B *17/00*
U.S. Cl. 128—330 11 Claims

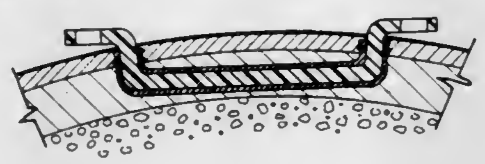

1. A method of forming anchorage means on the scalp to enable removable installation of a hairpiece, said method comprising forming a pair of spaced incisions in the scalp, removing from another surface of the body at least one sheet of skin, transplanting and inserting said sheet of skin within the scalp with the normally outwardly directed surface of said sheet of skin directed inwardly and away from the adjacent scalp tissue which said sheet of skin overlies, so that said sheet of skin substantially defines an area extending between said incisions, thereafter leaving said sheet of skin in such position until it merges with the adjacent scalp tissue to form an integral tunnel open at its opposite ends and throughout its entire length, said tunnel extending continuously between said incisions and being adapted to removably receive a scalp anchor for attachment of a hairpiece to said scalp anchor.

4,372,318
THERMAL TREATMENT DEVICE
Eric Viesturs, 680B Heritage Village, and Gundar Viesturs, Oakhill Dr., both of Southbury, Conn. 06488
Filed Nov. 4, 1980, Ser. No. 203,988
Int. Cl.[3] A61F *7/00*
U.S. Cl. 128—403 1 Claim

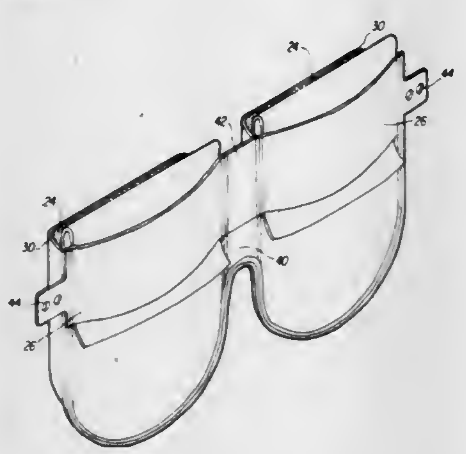

1. A device used to overlie the eyes and nose of patient receiving thermal treatment, said device comprising:
first and second like thin flexible vertically elongated hollow interior members adapted to receive hot or cold material, each member having oppositely disposed front and rear surfaces, top and bottom edges and oppositely disposed side edges defining said interior, the front surface of each member having a slit communicating with each respective interior of the member to enable insertion or removal of hot or cold material into said interior of each member, each slit extending between the side edges of its corresponding front member adjacent but below the top edge of each front member;
a thin vertically elongated flexible central element having oppositely disposed front and rear surfaces and itself disposed between the first and second members, said element having first and second oppositely disposed side edges, each of the first and second side edges of the element being connected to an adjacent side edge of a corresponding one of said first and second members; and
a horizontal elongated flexible strip extending across the front surfaces of said first and second members and said element between the top and bottom edges of said first and second members, the strip having a top edge disposed below the slits of the first and second members, said strip being secured to each member in spaced apart discrete positions adjacent the side edges of each front member and being otherwise spaced from the front surface of each member, each member having a top portion which is disposed above the top edge of the strip and which can be folded upon the remaining portion of the member and positioned between the strip and the front surface of the member to seal said slit, each top portion when folded having a horizontal line of fold coincident with the top edge of said strip;
first and second thin flexible sheets, each sheet being disposed adjacent the rear surface of the corresponding member and sealed thereto along the bottom edge and along those parts of the side edges which are disposed below the top edge of the strip, the top edge of each sheet being aligned with the top edge of the strip, thus forming a pocket whereby each of the first and second members has a corresponding pocket; and
first and second flexible cushioning layers having thermal delay characteristics, each of the layers being removably disposed in the pocket of the corresponding one of said members.

4,372,319
LOW FREQUENCY THERAPEUTIC INSTRUMENT
Tsutomu Ichinomiya; Mamoru Hosoe; Masayoshi Nagayama; Hirotaka Chousa, and Rokusaburo Kimura, all of Kadoma, Japan, assignors to Matsushita Electric Works, Ltd., Osaka, Japan
PCT No. PCT/JP80/00130, § 371 Date Feb. 17, 1981, § 102(e) Date Feb. 17, 1981, PCT Pub. No. WO80/02803, PCT Pub. Date Dec. 24, 1980
PCT Filed Jun. 13, 1980, Ser. No. 237,126
Claims priority, application Japan, Jun. 15, 1979, 54-75934
Int. Cl.[3] A61N *1/36*
U.S. Cl. 128—421 4 Claims

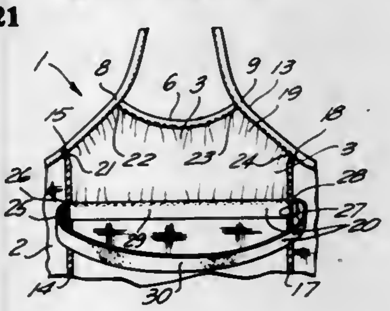

1. Low frequency therapeutic apparatus for applying low frequency pulses to a human body comprising pulse generating means for producing a low frequency pulse output, control means for controlling said pulse output in response to a control signal such that a controlled pulse output is produced, terminal means connected to said control means for applying said controlled pulse output to a human body, human body detecting means responsive to contact of said terminal means with a human body for automatically producing said control signal such that the amplitude of said controlled pulse output is gradually increased from a low value to a predetermined operating value.

4,372,320
ARTICLE OF CLOTHING HAVING BUILT-IN BUST SUPPORT
Philip Silber, 3 Guyer Rd., Westport, Conn. 06880
Filed Aug. 27, 1981, Ser. No. 296,705
Int. Cl.[3] A41C *3/08;* A41B *5/00*
U.S. Cl. 128—455 5 Claims

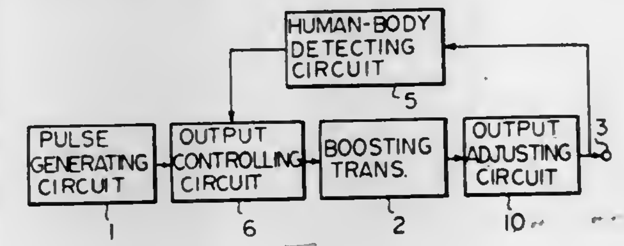

1. An article of clothing having built-in bust support and being capable of being worn by a person comprising
an outer garment which is capable of extending from the shoulders of said person to the waist of said person,
said outer garment having a right side longitudinal seam line and a left side longitudinal seam line,
a right side attachment zone located within and along said right side longitudinal seam line,
a left side attachment zone located within and along said left side longitudinal seam line,
an inner garment inside of said outer garment and having an upper part and a lower part,
said upper part of said inner garment being capable of extending from above the bust of said person to below the bust of said person and along the inner front side of said outer garment,
means for securely attaching said upper part of said inner garment to said outer garment along the front side of said outer garment,
means for securely attaching said upper part of said inner garment to said outer garment, along the right side longitudinal seam line of said outer garment, from above said right side attachment zone, down to and within, said right side attachment zone,
means for securely attaching said upper part of said inner garment to said outer garment along the left side longitudinal seam line of said outer garment, from above said left side attachment zone, down to and within, said left side attachment zone,
said lower part of said inner garment extending circumferentially completely around the inside of said outer garment and said lower part being capable of being placed below the bust of said person,
said lower part of said inner garment comprising a front section and a rear section,
means for securely attaching said front section of said lower part of said inner garment to the bottom edge of said upper part of said inner garment,
means for securely attaching said front section of said lower part of said inner garment at said right side attachment zone to the right side longitudinal seam line of said outer garment,
means for securely attaching said front section of said lower part of said inner garment at said left side attachment zone to the left side longitudinal seam line of said outer garment,
between said right side attachment zone and said left side attachment zone said front section of said lower part of said inner garment is continuously attached to said bottom edge of said upper part of said inner garment, and between said attachment zones said front section of said lower part of said inner garment is not attached to said outer garment, and between said attachment zones said bottom edge of said upper part is also not attached to said outer garment,
whereby there is a region in which said upper part of said inner garment and the front side of said outer garment are unconnected.

4,372,321
MOLDED REINFORCED BREAST CUP AND METHOD FOR MAKING SAME
Earl Robinson, Marietta, Ga., assignor to The Lovable Company, Norcross, Ga.
Filed Apr. 18, 1980, Ser. No. 141,329
Int. Cl.[3] A41C *3/00*
U.S. Cl. 128—463 8 Claims

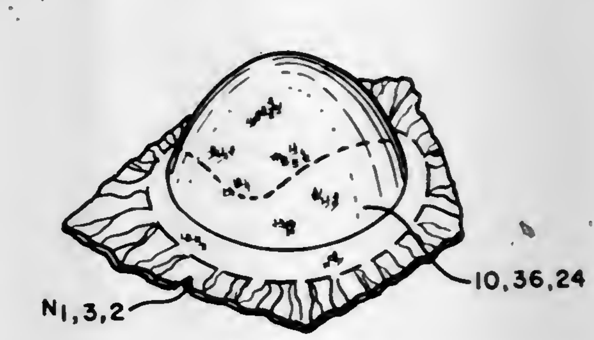

1. A molded breast cup for use in brassieres and other garments, said breast cup comprising
(a) an outer layer of fabric having a bottom edge,
(b) an inner layer of fabric having a bottom edge,
(c) an intermediate reinforcing layer of fabric having a bottom edge,
(d) said intermediate layer being sandwiched between said outer and inner layers with the three bottom edges in juxtaposed relation, the height of said intermediate layer being smaller than that of said outer and inner layers,
(e) fusable means being provided on some of said layers,
(f) said three layers being molded between heated male and female molding members to form a unitary molded breast cup wherein the intermediate layer provides reinforcement at the central bottom part of the cup.

4,372,322
BRASSIERE
Harold Stern, Wyckoff, N.J., and Elisabeth Suleiman, Newark, Del., assignors to International Playtex, Inc., Stamford, Conn.
Filed Jun. 2, 1981, Ser. No. 269,916
Int. Cl.[3] A41C *3/00*
U.S. Cl. 128—491 19 Claims

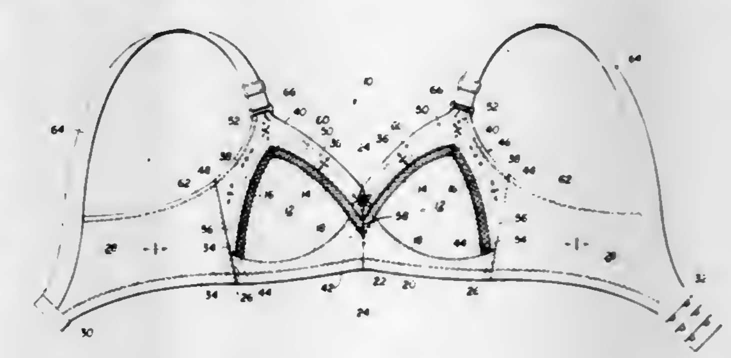

1. A brassiere comprising:
two breast receiving cups each having an inner edge, an outer edge, and a bottom edge;
cup framing means peripherally extending about said cups;
body encircling means affixed laterally outward of said framing means;
shoulder straps extending upward of said cup framing means;
a non-stretchable bottom portion of said cup framing means being connected directly to said bottom edge of a respective cup, extending laterally beyond the inner and outer

edges of said cups, and secured at its outer edge to a respective body encircling means;

a unitary inner and outer panel of said cup framing means of multi-directional stretchable material for each cup extending along the inner and outer edge of said cups; and

transition means interconnecting said unitary inner and outer panel and the inner and outer edge of said cup for providing a transition between the cup and the multi-directional stretchable inner and outer panel.

4,372,323

ULTRASONIC DIAGNOSING APPARATUS

Yasuhiko Takemura, Nishinasuno; Takahisa Okazaki, Otawara, and Akira Imai, Urawa, all of Japan, assignors to Tokyo Shibaura Denki Kabushiki Kaisha, Japan

Filed Jul. 18, 1980, Ser. No. 170,178

Claims priority, application Japan, Jul. 20, 1979, 54-91675

Int. Cl.^{3} A61B *10/00*

U.S. Cl. 128—660 **6 Claims**

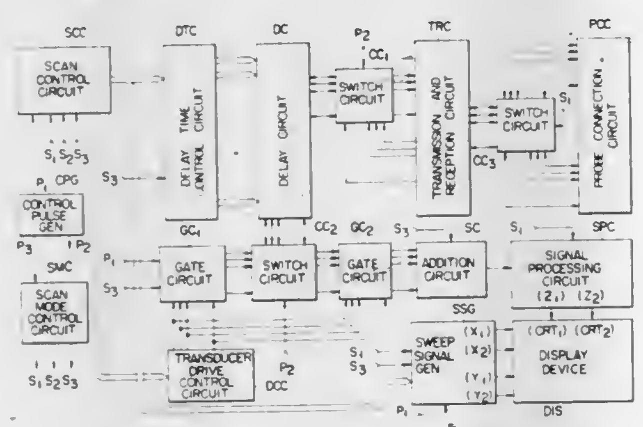

1. An ultrasonic diagnosing apparatus comprising:

probe means including a plurality of ultrasonic transducers and means for actuating said transducers to produce ultrasonic scanning beams and to receive the reflections thereof from a subject under examination;

scan mode selection means for selectively producing either a first or a second scan mode control signal representing either a linear scan mode or a sector scan mode, respectively;

scanning control means including means for delaying driving timing signals fed to said transducers and the echo signals received thereby, said scanning control means being controlled by said first scan mode control signal to set said delay means to produce a series of parallel scanning beams for linear scanning and being controlled by said second scan mode control signal to set said delay means to produce a series of divergent scanning beams for sector scanning;

signal processing means responsive to said mode control signals for transforming the echo signals received by said transducers into video signals in accordance with either a linear or a sector scan processing algorithm; and

display means for displaying at least one tomogram according to said video signals produced by said signal processing means.

4,372,324

ANALOG PEAK VOLTAGE DETECTOR IN A DEFIBRILLATOR

Martin G. Rockwell, McMinnville, Oreg., assignor to Hewlett-Packard Company, Palo Alto, Calif.

Filed Aug. 17, 1981, Ser. No. 293,649

Int. Cl.^{3} A61B *5/04*

U.S. Cl. 128—695 **6 Claims**

1. An apparatus for detecting the maximum current conducted through a patient during defibrillation comprising:

current generating means for generating a substantially constant current;

switching means coupled to the current generating means for switching the current generating means on and off;

capacitive storage means coupled to an output of the current generating means for storing a held voltage and increasing the held voltage at a substantially constant rate while the current generating means is turned on;

transforming means coupled to the patient for transforming the current through the patient to a proportional voltage; and

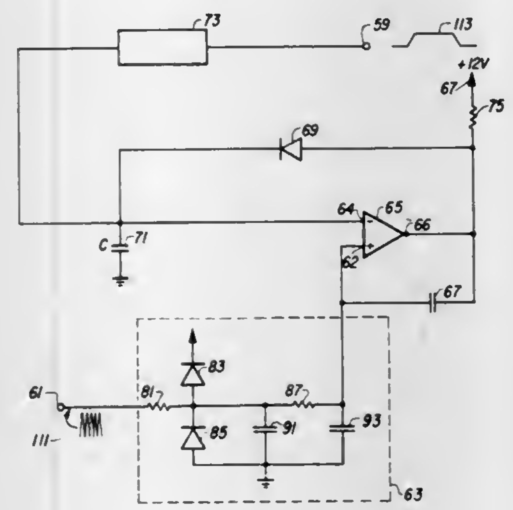

voltage comparison means coupled to the capacitive storage means, the transforming means, and the switching means, for causing the switching means to turn the current generating means on when the held voltage is less than said proportional voltage and off when the held voltage is greater than said proportional voltage, thereby increasing the held voltage until it is equal to the maximum value of the proportional voltage thereby indicating the maximum current conducted through the patient.

4,372,325

METHOD FOR TAKING A BLOOD SAMPLE

Russell G. Raitto, Fitzwilliam, N.H., assignor to Concord Laboratories, Inc., Keene, N.H.

Division of Ser. No. 870,118, Jan. 17, 1978, which is a continuation-in-part of Ser. No. 714,644, Aug. 16, 1976, abandoned. This application Nov. 2, 1981, Ser. No. 317,307

Int. Cl.^{3} A61B *5/14*

U.S. Cl. 128—763 **1 Claim**

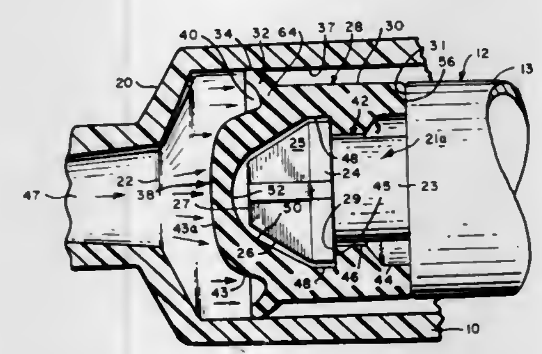

1. A method for taking a sample of blood using a disposable syringe assembly particularly suited because of the low force requirement for the operation thereof to be used for obtaining a blood sample from a patient wherein said syringe comprises a barrel having a cylindrical inner wall and a plunger comprising a plunger stem and a compressible, elastomeric, generally cylindrical plunger tip of lesser diameter than the inner wall of said barrel, said plunger tip having an integral, annular, elastically deformable wiper extending peripherally radially outwardly and axially forwardly from said plunger tip at a forward portion thereof at an acute angle to the longitudinal center axis of said plunger tip and terminating at the outer edge

thereof in a wiping edge having a minimal diameter slightly in excess of the diameter of the inner wall of said barrel, thereby forming a sealing engagement with the inner wall of said barrel, said annular wiper being the sole sealing element between said plunger tip and said wall, said plunger being spaced from said barrel along the length thereof so that axial movement between said plunger and said barrel is substantially free of frictional contact except for the contact by said sole sealing element, said syringe having a hypodermic needle attached thereto;

said method comprising moving said plunger tip axially fowardly to expel liquid anti-coagulant and air from said barrel until initial contact of said tip with the barrel end is made, whereby a predetermined amount of said anti-coagulant remains in said barrel; followed by inserting said needle into a blood vessel of a patient and permitting the blood pressure in said blood vessel to move said plunger tip and plunger axially rearwardly in said barrel to take a sample of blood.

4,372,326

MANUFACTURING MACHINE FOR PRODUCING TWO CONTINUOUS CIGARETTE RODS

Enzo Seragnoli, Bologna, Italy, assignor to G. D. Societa' per Azioni, Italy

Filed Apr. 16, 1981, Ser. No. 254,975

Claims priority, application Italy, May 26, 1980, 48787 A/80; Feb. 16, 1981, 47806 A/81; Feb. 16, 1981, 47807 A/81

Int. Cl.^{3} A24C *5/18, 5/39*

U.S. Cl. 131—84 B **21 Claims**

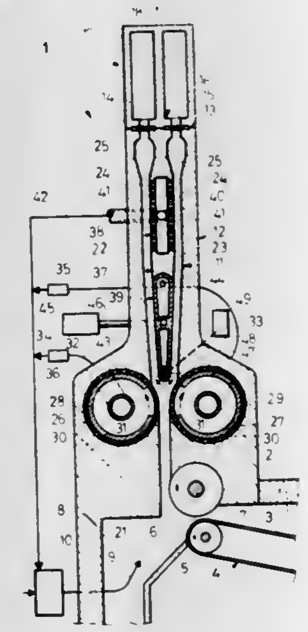

1. A manufacturing machine for simultaneously producing two continuous cigarette rods comprising a substantially horizontal suction conveyor mobile in a predetermined direction of movement, and a duct extending upwards and terminating below said suction conveyor to feed the same with a continuous flow of shredded tobacco particles, said duct comprising a lower inlet portion consisting in a single conduit having an elongated cross-section substantially parallel with said direction of movement, and an upper outlet portion comprising two channels extending fork-like from an upper end of said conduit, said two channels having elongated inlet cross-sections arranged parallel with the cross-section of said conduit, and being side-by-side in a direction transverse to said direction of movement.

4,372,327

CUTTING HEAD FOR A CIGARETTE FILTER ATTACHMENT MACHINE

Derek H. Dyett, and Neil Thorp, both of High Wycombe, England, assignors to Molins Limited, Bucks, England

Filed Mar. 14, 1980, Ser. No. 130,351

Claims priority, application United Kingdom, Mar. 16, 1979, 7909301; Dec. 11, 1979, 7942620

Int. Cl.^{3} A24C *5/56*

U.S. Cl. 131—95 **12 Claims**

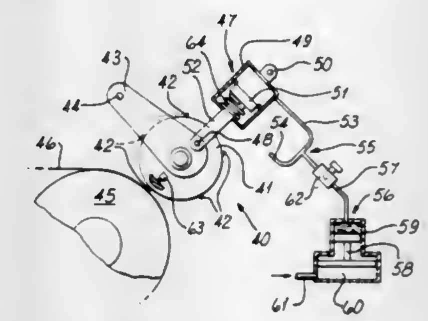

1. A cutting head for a cigarette filter attachment machine, for cutting a filter attachment web at regular intervals in cooperation with a cutting drum, comprising a rotary member which carries one or more knives protruding therefrom, each knife having a longitudinal cutting edge, means for rotating said rotary member, said rotary member being mounted on its opposite ends on two carrier members each of which is movable towards the cutting drum independently of the other carrier member so that movement of both carrier members towards the cutting drum ensures contact of each knife with the cutting drum along substantially the entire length of the knife, and including means for urging both carrier members towards the cutting drum so as to bias said rotary member toward said cutting drum and drive each knife repeatedly into contact with said cutting drum as said rotary member is rotated.

4,372,328

FIBROUS MATERIAL FOR TOBACCO SMOKE FILTER

Erwin Kausch, Jesteburg, and Folkhard Tödter, Hamburg, both of Fed. Rep. of Germany, assignors to B.A.T. Cigaretten-Fabriken GmbH, Hamburg, Fed. Rep. of Germany

Filed May 20, 1981, Ser. No. 265,640

Claims priority, application Fed. Rep. of Germany, May 20, 1980, 3019163

Int. Cl.^{3} A24D *3/10*

U.S. Cl. 131—332 **8 Claims**

4. A method of removing at least some of the gas phase components from tobacco smoke, comprising:

contacting said tobacco smoke containing gas phase components with a filter material comprising cellulose fibers containing amino groups, said filter material prepared by (a) introducing reactive groups into the cellulose molecule to give the reactive cellulose derivative structures:

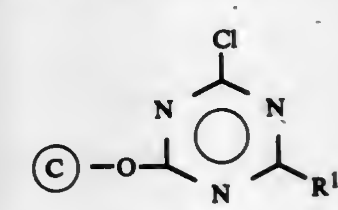

(I)

where R^1 is chlorine or amino and C —O— is a cellulose radical,

(II)

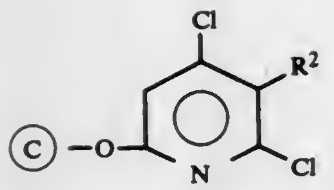

where R^2 is hydrogen or chlorine,

(III)

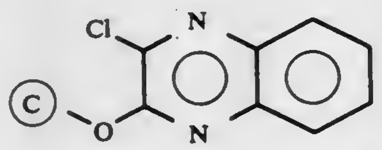

(IV) Ⓒ —O—CH_2—CH_2—SO_2—CH=CH_2

(V)

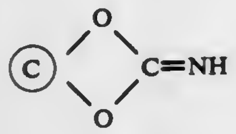

or

(VI)

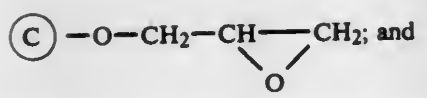

(b) reacting the resulting reactive cellulose groups with ammonia, guanidine, aminoacids having a ratio of amino groups to carboxyl groups of not less than 2:1, diamines of the general formula

(VII)

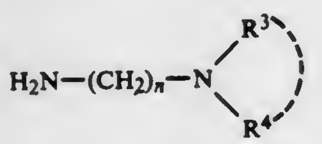

where n is 2–6 and R^3 and R^4 are each, independently of one another, hydrogen or alkyl groups having 1–4 carbon atoms or together form a cyclopentyl, cyclohexyl, pyrrol, imidazole, pyrrolidine, piperidine or morpholine ring, or polyamines of the general formula

(VIII)

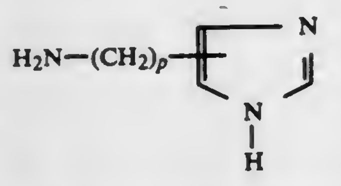

where p is 2–6, or polyethyleneimines of the formula

H_2N-(CH_2-CH_2-NH)$_q$-CH_2-CH_2-NH_2 (IX)

where q is 1–6.

4,372,329
COMPRESS ROLLER CURLER

Alphonso W. Brown, Jr., 56 Alberge La., Baltimore, Md. 21220
Filed Jun. 5, 1981, Ser. No. 270,984
Int. Cl.³ A45D *2/00*

U.S. Cl. 132—40 **1 Claim**

1. In a system for treating strands of hair on a human scalp, comprising a tubular body having an outer end and an inner end, said body being of material rendering said body resiliently compressible axially; guide means, including bellows-like convolutions in the body, for winding said hair; a respective flange-like member, larger in diameter than the body, on the outer end of the body and on the inner end of the body; and means for holding the body axially compressed for gripping hair wound around the body, the improvement comprising: said inner flange-like member having: a comblike securance thereon at the bottom inner end of the body for engaging the hair of a user, and a peripheral opening therein in position for receiving from said comblike securance said hair engaged by said comblike securance; said body having a circumferential

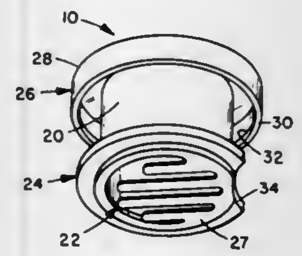

slot through the upper wall thereof to help hold ends of hair wound around said body in said spiral convolutions, and the outer flange-like member and the inner flange-like member having respective engaging means for snapping them together into engagement when said body is axially compressed, for holding said hair wound on said body.

4,372,330
METHOD AND APPARATUS FOR ATTACHMENT OF HAIR UNITS

Charles W. Nelson, Mission, Kans., assignor to Apollo Hair Systems, Inc., Mission, Kans.
Filed Oct. 13, 1981, Ser. No. 310,732
Int. Cl.³ A41G *3/00*

U.S. Cl. 132—53 **2 Claims**

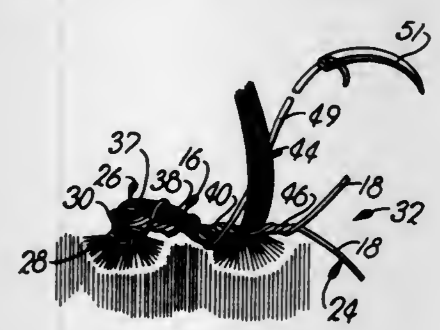

1. A method of attaching a hair unit by anchoring a braid to the natural hair of a recipient comprising the steps of:
(a) gathering several strands of hair into a tuft;
(b) providing filament means presenting a pair of juxtaposed filament stretches;
(c) anchoring said filament stretches to said tuft intermediate the ends of said filament stretches so as to form at least one filament pair;
(d) twisting the members of said filament pair about each other so as to form a first winding having a first direction of rotation, a second winding having a direction of rotation opposite to said first winding, the portion of said stretches between said windings defining an eye;
(e) passing the free ends of said strands of said tuft through said eye;
(f) locking said tuft in said eye by shifting said respective windings together for restricting said eye and capturing said tuft;
(g) gathering several strands of hair into a second tuft;
(h) passing said second tuft between said members of said filament pair;
(i) successively repeating steps (d) through (h) inclusively, using respective additional tufts.

4,372,331
LIPSTICK APPLICATOR DEVICE

Howard Thompson, 125 NW. 5th St., Oklahoma City, Okla. 73102
Filed May 29, 1981, Ser. No. 268,479
Int. Cl.³ A45D *40/22*

U.S. Cl. 132—88.7 **16 Claims**

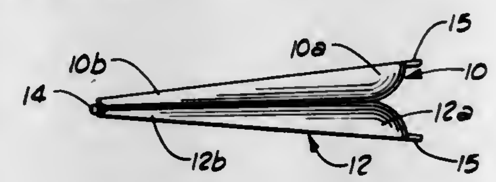

1. A lipstick applicator device comprising:
a first compact half including a substantially planar back having a wide side and a narrow side;
a second compact half including a substantially planar back having a wide side and a narrow side;
an edge formed about the border of each compact half, each of said edges extending generally uprightly from its associated back and including a thick edge along said wide side and a thin edge along said narrow side;
partition means extending generally uprightly from each of said backs, said partition means and said thin edges forming a recess therebetween;
hinge means joining said compact halves to each other at the thin edges thereof;
means for maintaining a body of lipstick in each of said recesses; and
an arcuate body of lipstick received in each of said recesses such that when said compact halves are pivoted to an opened position in back-to-back relation, said arcuate bodies of lipsticks overlie each other at a location adjacent the thin edges of the compact halves, and in positions conforming to the natural position of the lips.

4,372,332
COMPRESSOR STATION FOR ARCTIC GAS PIPELINE

Burton T. Mast, 9419 Stockport, Spring, Tex. 77373
Filed Jan. 28, 1981, Ser. No. 229,207
Int. Cl.³ F17D *1/07*

U.S. Cl. 137—1 **10 Claims**

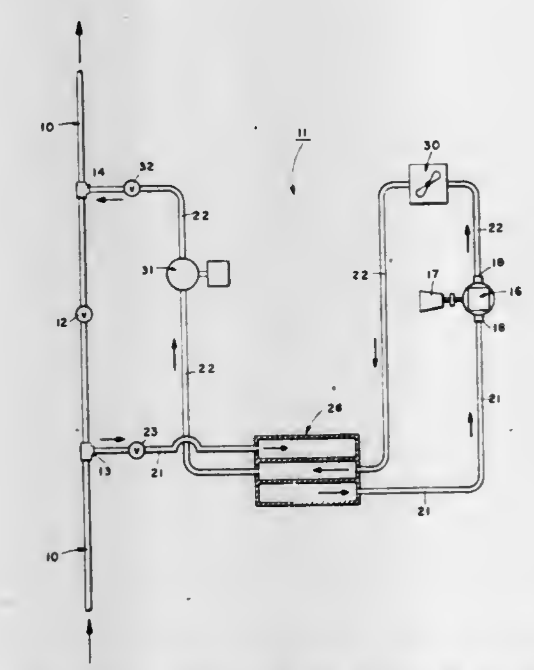

1. In a method for transporting gas through a pipeline system comprising a long pipeline for transporting cold gas from arctic regions through freezing ground, and a plurality of recompression stations spaced along the length of the pipeline, each station receiving upstream from the pipeline decompressed gas and returning downstream to the pipeline recompressed cold gas to thereby overcome the transmission pressure losses through the pipeline, the improvement including:
(a) recompressing the received decompressed gas from the pipeline;
(b) cooling the recompressed gas resulting from step (a) with ambient air;
(c) further cooling the recompressed gas resulting from step (b) with the received decompressed cold gas from the pipeline before recompressing the decompressed gas as provided in step (a); and
(d) injecting the recompressed gas resulting from step (c) into the pipeline.

4,372,333
VALVE ACTUATING APPARATUS AND METHOD

Kip B. Goans, Harvey, La., assignor to Baker CAC, Inc., Belle Chasse, La.
Filed Aug. 24, 1981, Ser. No. 295,203
Int. Cl.³ F17D *3/00;* **F16K** *31/122*

U.S. Cl. 137—1 **16 Claims**

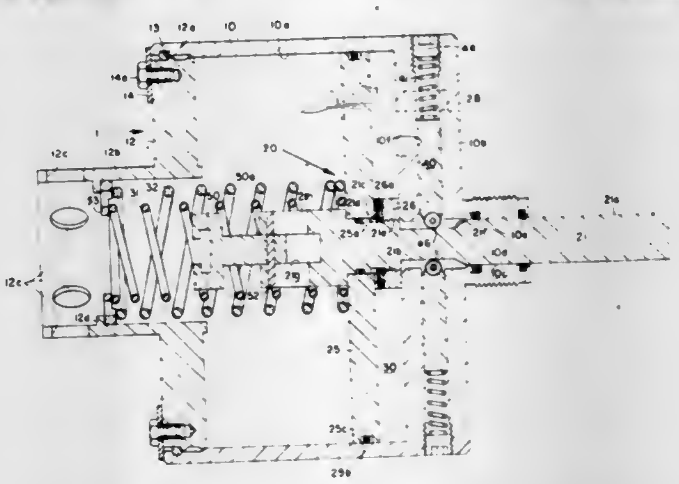

13. The method of operating a fluid pressure actuator for moving a cooperating member, said actuator being of the type wherein fluid pressure moves a shaft of the actuator in one direction and an axially disposed bias member returns the shaft in the opposite direction to its starting position comprising the steps of:
(1) applying fluid pressure to initiate movement of the actuator shaft;
(2) during the initial fluid pressure induced movement of the actuator shaft, exerting a force on a generally radially disposed energy storing element through the cooperation of a plunger disposed between the energy storing element and a cam surface on said shaft prior to actuation of said cooperating member, thereby storing energy in said energy storing element during the initial portion of the fluid pressure induced stroke of the shaft; and
(3) releasing said fluid pressure and permitting the shaft to return to its starting position under the force of the axially disposed springs until said plunger engages said cam surface and releases the stored energy in the energy storing element by imparting an axial thrust to the final portions of the return stroke of the shaft.

4,372,334
OVERPRESSURE RELIEF CONTROL SYSTEM

Herman L. Paul, Jr., Lebanon, Pa., assignor to Continental Disc Corporation, Kansas City, Mo.
Continuation-in-part of Ser. No. 264,355, May 18, 1981, and Ser. No. 264,276, May 18, 1981. This application Sep. 18, 1981, Ser. No. 303,346
Int. Cl.³ F17D *1/00*

U.S. Cl. 137—12 **14 Claims**

1. A method of relieving an overpressure condition within a pressurized system having a pressure passage to vent pressurized fluid therefrom comprising the steps of:

(a) providing at least two relief passages for flowing a pressurized fluid to a safe discharge location;
(b) interconnecting said relief passages with said pressure passage by means of a valve normally in a first position to provide full flow communication between said pressure passage and a first of said relief passages, said valve including motor means to move said valve between said first position and a second position providing full flow communication between said pressure passage and a second relief passage;

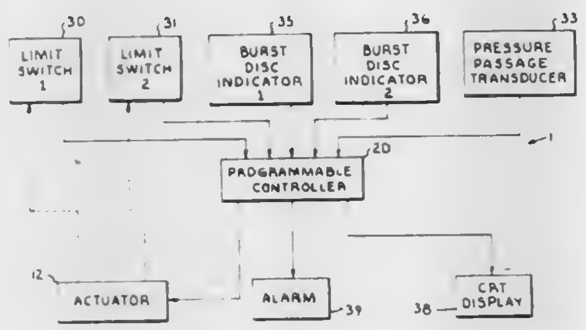

(c) providing each relief passage with an overpressure relief device having a respective overpressure rating, said relief device in the first relief passage being a rupture disc;
(d) sensing the integrity of said rupture disc;
(e) sensing the pressure within said pressure passage; and
(f) upon sensing the rupture of said rupture disc and upon the pressure in said pressure passage decreasing to a selected first fraction of the overpressure rating of the relief device in said second relief passage, controlling said motor means to place said valve in said second position.

4,372,335
FLOW DIVIDER VALVE ASSEMBLY
Hideyori Sato, Funabashi; Nobuaki Inaba, Yokohama, and Shigeru Shinohara, Tokyo, all of Japan, assignors to Kabushiki Kaisha Komatsu Seisakusho, Tokyo, Japan
Filed Feb. 24, 1981, Ser. No. 237,769
Claims priority, application Japan, Feb. 29, 1980, 55-24934[U]
Int. Cl.³ G05D *11/03*
U.S. Cl. 137—101 **3 Claims**

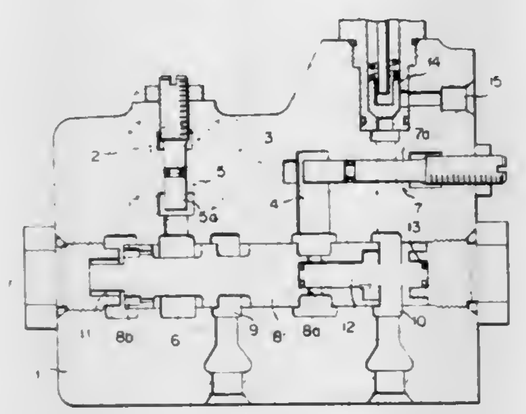

1. A flow divider valve assembly, comprising:
a valve body defining an inlet port to be connected to a source of fluid under pressure, a priority flow outlet port, an excess flow outlet port and a valve bore interconnecting said ports;
a valve spool axially moveable within said valve bore, said valve spool having formed therein an axial bore for permitting a constant communication between said inlet port and said priority flow outlet port;
biasing means disposed in the axial bore of said valve spool for biasing said valve spool in a direction toward opening said priority flow outlet port;
first restrictor means disposed between said inlet port and said priority flow outlet port for adjustably restricting the flow rate thereacross thereby allowing a controlled flow rate to pass therethrough; and
second restrictor means disposed between said inlet port and said excess flow output port for adjustably restricting the flow rate thereacross, said second restrictor means being adapted to gradually increase said controlled flow rate through said first restrictor means when the rate of flow from said inlet port to said excess flow outlet port increases.

4,372,336
CHEST DRAINAGE UNIT
William D. Cornell, Ballwin; Ronald Crouther, Manchester; Howard P. Dyer, Webster Groves, and Alan B. Ranford, Des Peres, all of Mo., assignors to Sherwood Medical Industries, Inc., St. Louis, Mo.
Filed Jun. 17, 1980, Ser. No. 160,447
Int. Cl.³ A61M *1/00*
U.S. Cl. 137—205 **2 Claims**

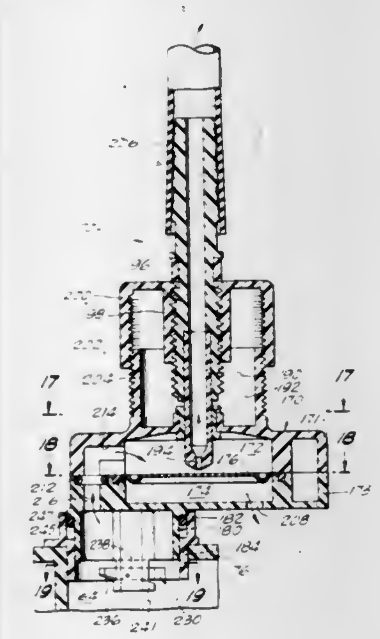

1. In a chest drainage apparatus comprising a casing having a collection chamber therein for receiving fluid to be drained from a chest cavity, means defining an inlet opening into said collection chamber for establishing fluid communication between said collection chamber and a patient's chest cavity to be drained, means defining an outlet adapted to be connected in fluid communication with a source of suction, means defining a liquid seal between said collection chamber and said outlet, and a suction regulator for limiting the amount of suction applied to said collection chamber via said outlet and said liquid seal, the improvement comprising:
said suction regulator comprising:
a regulator housing defining a suction regulator chamber;
means defining an outlet opening from said regulator chamber which is in fluid communication with said collection chamber via said liquid seal;
means defining an inlet opening into said regulator chamber which is adapted to be connected to a source of suction;
pressure responsive means responsive to suction above a predetermined level in said collection chamber to block suction above about said predetermined level from said inlet opening chamber until the suction in said collection chamber drops to about said predetermined level;
said pressure responsive means comprising a flexible diaphragm in said regulator chamber;
a nozzle extending into said inlet opening in said regulator chamber; said nozzle including an outlet opening disposed adjacent one surface of said flexible diaphragm, whereby suction above said predetermined level at said one surface of said diaphragm in the vicinity of said nozzle will move a portion of said diaphragm against said nozzle outlet; and means for manually moving said nozzle toward and away from said flexible diaphragm so as to vary said predetermined level of suction at which said diaphragm in the vicinity of said nozzle will move against said nozzle outlet.

4,372,337
ROTARY DISTRIBUTOR VALVE
Kurt Holzenberger, Frankenthal, Fed. Rep. of Germany, assignor to Klein, Schanzlin & Becker Aktiengesellschaft, Frankenthal, Fed. Rep. of Germany
Filed Jan. 7, 1980, Ser. No. 109,922
Claims priority, application Fed. Rep. of Germany, Jan. 22, 1979, 2902364
Int. Cl.³ F16K *5/08*
U.S. Cl. 137—240 **12 Claims**

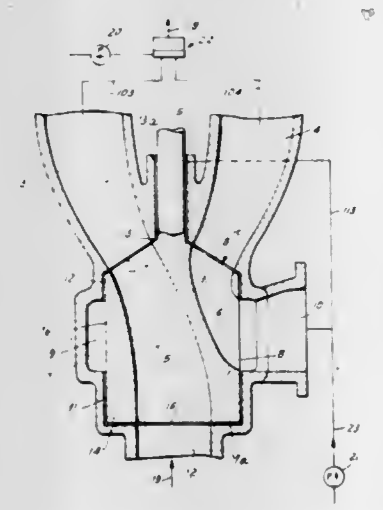

1. A valve for connecting a first conduit which delivers a first fluid with a selected one of several second conduits, comprising a housing having a first opening constituting a first inlet and communicating with the first conduit, a second opening constituting a second inlet, and a plurality of third openings each constituting an outlet and each communicating with a different one of said second conduits; a valving element rotatable in said housing and having a first passage including a first open end in permanent communication with said first opening and a second open end movable into register with a selected third opening in response to rotation of said valving element in said housing, and a second passage having a first open end in permanent communication with said second opening and a second open end registering with one of said third openings when the second open end of said first passage registers with another of said third openings, said valving element further having a peripheral surface and at least one additional surface and defining with said housing a plurality of clearances adjacent to said surfaces and communicating with said second opening and with said second passage; and means for admitting a second fluid into said housing via said second opening whereby said second fluid penetrates into and continuously rinses said clearances.

4,372,338
HIGH PRESSURE VALVE ASSEMBLY
Chester C. Efferson, Ethel, La., assignor to Dresser Industries, Inc., Dallas, Tex.
Filed Jul. 22, 1980, Ser. No. 171,098
Int. Cl.³ F16K *5/22;* **B08B** *3/04*
U.S. Cl. 137—240 **4 Claims**

1. In a valve assembly adapted to receive a slurry at relatively low pressure and discharge the slurry to a system at relatively high pressure and comprising a housing having a low pressure slurry inlet and outlet means on opposite sides of said housing, a high pressure fluid inlet and slurry outlet means on opposite sides of said housing separated from said low pressure slurry inlet and outlet means, and a tapered valve plug having a plurality of offset ports therein defining the openings of a valve chamber between corresponding pairs of inlet and outlet offset ports, said valve plug being rotatably supported in said housing at one end by bearings and a drive shaft passing through a first end cover and at the other end of said housing by a laterally adjustable means passing through a second end cover, said valve plug ports being in registry with said housing inlets and outlets in a predetermined sequence during rotation of said valve plug, the improvement comprising means defining at least one annular groove contained in exposed communication between the radially separated relatively rotating sur-

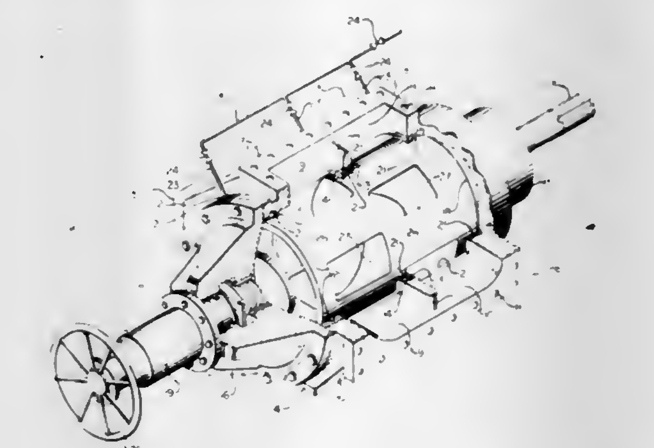

faces of said valve plug and said housing at a selected longitudinal location corresponding to a location of potential banding wear therebetween, conduit means adapted continuously to supply fluid of the character of that being transferred from the low pressure side to the high pressure side from a source to said at least one groove and control means operative to control fluid flow in said conduit means so that upon rotation of said valve plug fluid in said conduit means is provided to said groove to establish a continuous lubricating/flushing flow between said housing and said valve plug surfaces thereat.

4,372,339
YARD HYDRANT
Stephen J. Anderson, Storm Lake, Iowa, assignor to Merrill Manufacturing Company, Storm Lake, Iowa
Filed Nov. 26, 1980, Ser. No. 210,670
Int. Cl.³ E03B *9/04, 9/14*
U.S. Cl. 137—288 **6 Claims**

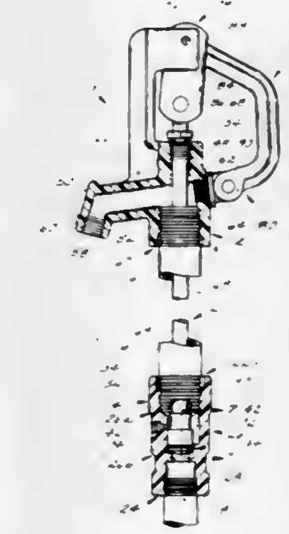

1. In a yard hydrant of the class having a head chamber with integral nozzle, a standpipe secured at one end to said head chamber and secured at its other end to a valve housing adapted to be connected to a source of water under pressure, a valve assembly including a valve stem disposed in said standpipe and operable relative to said housing and means for operating said valve assembly, an improvement in said housing and valve assembly, comprising:
said housing being hollow having an upper internally threaded end for attachment to said standpipe, a lower end

for attachment to said source of water supply and a central section defining a valve head receiving axial bore concentrically reduced relative to said upper and lower ends,
said axial bore terminating in a valve seat concentric with a water passageway to said lower end,
a water flow channel within said housing and within an area of lesser diameter than the upper internally threaded end of said housing communicating with said axial bore from a point spaced a predetermined distance above said valve seat and extending therefrom to communication with said upper end,
said axial bore having a full circle area only intermediate said valve seat and the lowermost limit of said water flow channel,
a drain hole in said housing communicating with said axial bore,
a valve head on said valve stem disposed in fluid seal engagement in said axial bore, and
the means for operating said valve assembly effecting the reciprocation of said valve stem whereby in closed position, said valve head is in fluid seal engagement with said valve seat and said full circle area below said drain hole to open said hole to communication with said axial bore and said upper end and in the movement of said valve head off of said valve seat towards open position, water flow from said lower end through said water flow channel to said upper end, standpipe and nozzle is withheld while said valve head remains in the full circle area of said axial bore during which time said valve head registers with said drain hole to close the same before it has moved out of the full circle area to expose said water flow channel to communication with said lower end.

4,372,340
LIQUID STORAGE TANK
Elmer W. Rothrock, Hinsdale, Ill., assignor to Chicago Bridge & Iron Company, Oak Brook, Ill.
Filed Sep. 29, 1980, Ser. No. 191,505
Int. Cl.³ F16K *21/04*
U.S. Cl. 137—576 **11 Claims**

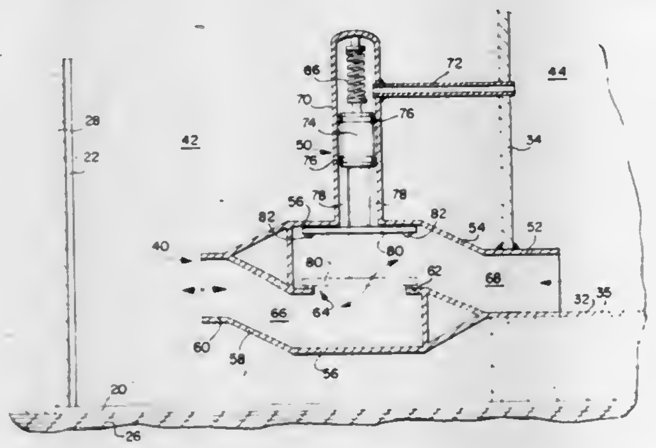

1. A storage tank comprising:
internal and external spaced apart walls defining a first liquid storage space between the two walls and a second liquid storage space surrounded by the internal wall;
each of the internal and external walls being joined to a bottom;
the first and second liquid storage spaces being adapted to store liquid in each at the same height at maximum capacity;
at least one fluid conduit means in fluid flow communication with and between the first and second storage spaces; and
valve means disposed in one of said storage spaces, normally open regardless of the liquid level in the second liquid storage space, capable of blocking fluid flow through the fluid conduit means from the second storage space to the first storage space and including means responsive to the liquid level in said second storage space for closing said valve means upon loss of liquid from the first storage space to outside the tank.

4,372,341
ROTARY SWITCH VALVE
Harry D. Crawley, Winnipeg, Canada, assignor to Versatile Cornat Corporation, Vancouver, Canada
Filed May 28, 1980, Ser. No. 154,078
Int. Cl.³ F16K *11/00*
U.S. Cl. 137—580 **2 Claims**

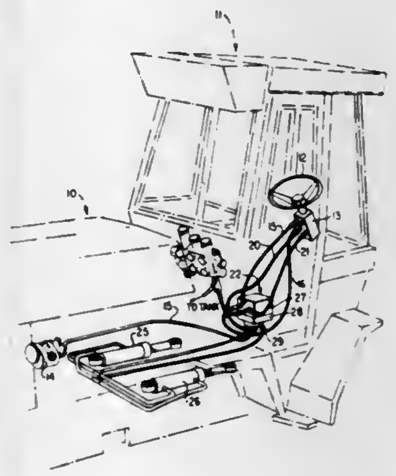

1. A rotary switch valve rotatable through 180° from a first to a second operating position re-directing the flow of hydraulic fluid in a hydraulic system, said switch valve comprising:
(a) a casing, said casing having an interface and an outer surface;
(b) a spool, said spool having an interface and outer surface, said spool being mounted with said spool interface adjacent and opposed to said casing interface, said spool being rotatable relative to said casing about a common longitudinal central axis;
(c) said casing and said spool having a cavity located between the respective interfaces;
(d) each of said spool and said casing having pressure, tank, left steering and right steering passageways therein, each of said passageways running from said respective outer surface; said left and right steering passageways of said spool and casing at said respective interface being symmetrical about said axis, said left and right steering passageways in said casing interface being aligned with said left and right steering passageways in said opposed cavity spool interface, respectively, when said valve is in said first operating position;
(e) inserts with substantially flat end faces on one end, the opposite ends of said inserts being inserted in said pressure and said left and right steering passageways in one of said spool and casing interfaces, each of said inserts having a shoulder within said cavity and a pressure producing washer mounted between said shoulder and said interface in which said inserts are inserted, said flat end faces exerting a pressure on and contacting the opposed interface;
(f) said left and right steering passageways of said spool at said spool interface being aligned with said right and left steering passageways of said cavity at said cavity interface, respectively, when said spool is rotated through substantially 180° relative to said casing to said second operating position.

4,372,342
BALANCING DAMPER WITH QUICK SET ADJUSTMENT BRACKET
Francis J. McCabe, 239 Hastings Ct., Doylestown, Pa. 18901
Filed Aug. 29, 1980, Ser. No. 182,506
Int. Cl.³ F16K *13/00*
U.S. Cl. 137—601 **7 Claims**

1. In a damper adapted for use in a duct and having a frame and at least one pivotally mounted blade movable between an open and a closed position with respect to said frame, an improved adjustment means comprising:
(a) an adjustment plate attached to said blade and including portions which extend along portions of said frame and an arcuate slot which defines the angle through which said blade can pivot; and
(b) means for locking said blade in a selected position, extending through portions of said duct and the arcuate slot of said adjustment plate and into threaded engagement with said frame;
(c) wherein said damper and said adjustment plate are capable of being contained within said duct;
so that tightening said locking means clamps said adjustment plate between said frame and said duct, thereby restraining said blade, and so that loosening said locking means permits movement of said blade.

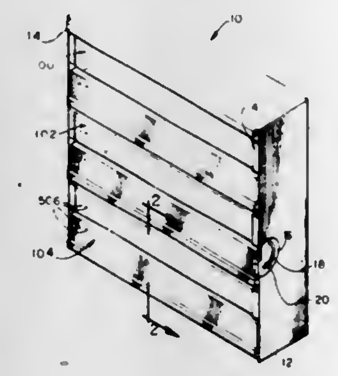

4,372,343
PRESSURE-RETAINING VALVE AND METHOD OF RETAINING PRESSURE
Joseph C. Trinkwalder, Jr., North Tonawanda, N.Y., assignor to Sherwood Selpac Corp., Lockport, N.Y.
Filed Mar. 23, 1981, Ser. No. 246,166
Int. Cl.³ F16K *17/26*
U.S. Cl. 137—614.2 **13 Claims**

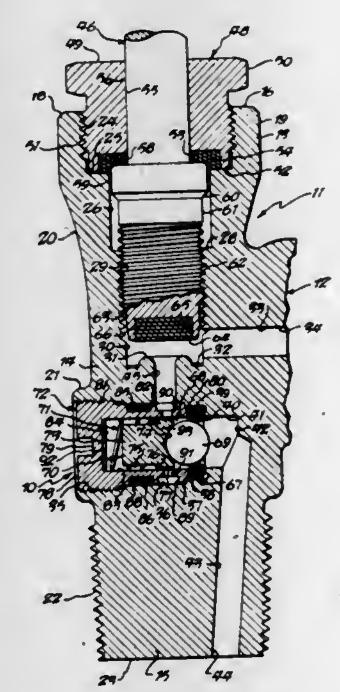

1. In a body provided with a fluid flow passageway therethrough, said passageway having an inlet at one end thereof and having an outlet at its other end, the improvement which comprises:
a pressure-retaining valve mounted on said body and operatively associated with said passageway to normally prevent the pressure at said inlet from equalizing with the pressure at said outlet, said pressure-retaining valve including
an annular seat mounted on said body about said passageway and facing away from said inlet;
a poppet member mounted on said body for movement toward and away from said seat, one of said seat and poppet member being formed of a resilient material;
a spring engaging said body and urging said poppet member to move toward said seat, the force exerted by said spring on said poppet member being equal in magnitude to an opposing force exerted on said poppet member by a predetermined differential between the pressures at said inlet and outlet such that, when such pressure differential falls below said predetermined differential, said poppet member will move toward and sealingly engage said seat to interrupt flow through said passageway, said poppet member being also adapted to move through said seat by deformation of said one resilient member to permit a reverse flow through said passageway from said outlet to said inlet.

4,372,344
BALL AND SOCKET JOINT WITH FLUID FLOW CAPABILITY THROUGH THE JOINT
Donald C. Stafford, Hinsdale, Ill., assignor to Chicago Bridge & Iron Company, Oak Brook, Ill.
Filed Sep. 29, 1980, Ser. No. 191,717
Int. Cl.³ F16L *27/00;* **B63B** *21/52*
U.S. Cl. 137—615 **15 Claims**

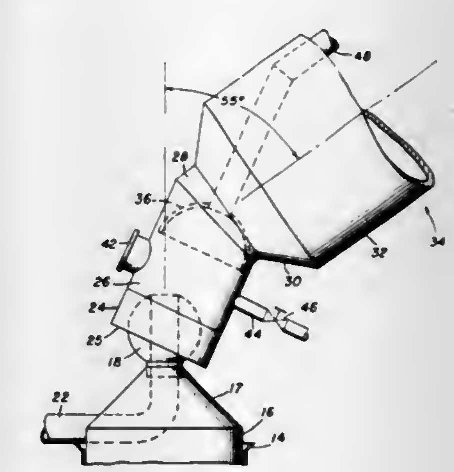

1. Apparatus comprising:
a ball joined to a first element with a hole extending through the ball and first element;
a socket having a spherical internal surface;
a shell, having an end portion directly joined to the socket, defining with soil socket enclosed chamber;
said socket containing the ball in mating and nesting fluid tight arrangement with the hole in the ball in direct fluid communication with and running out from the chamber; and
a fluid conduit in communication with the chamber.

4,372,345
FAIL-SAFE VALVE
Richard J. Mehus, Minneapolis, Minn., assignor to Economics Laboratory, Inc., St. Paul, Minn.
Filed Jul. 13, 1981, Ser. No. 282,924
Int. Cl.³ B08B *3/08;* **F16L** *55/14*
U.S. Cl. 137—636 **8 Claims**

1. Valving apparatus for selectively sanitizing the teat cups of one of a plurality of milking claws in an automatic milking system each claw havng a main milk line through which milk is conducted from the claw to a collection and storage container, comprising:
(a) a housing having a peripheral wall;
(b) a resilient main line insert carried by said housing and

extending therethrough, said insert being adjacent at least a portion of said peripheral wall, said insert being insertable in a discontinuity in each main milk line to have an entrance communicating with an up-flow portion of the main line and an exit communicating with a down-flow portion of the main line;

(c) a flushing conduit extending between a source of sanitizing agent and the main milk line for use in backflushing the milking claws, said conduit intersecting said insert within said housing and having a resilient portion within said housing and adjacent at least a portion of said peripheral wall; and

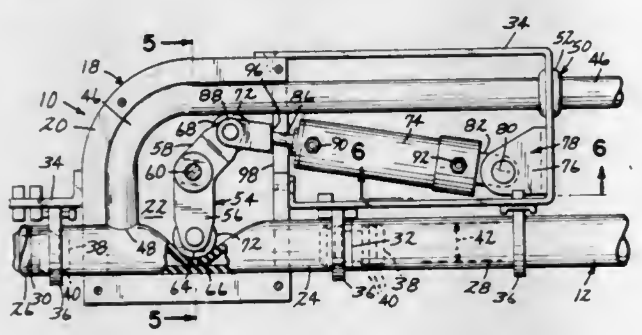

(d) a pinching element, having angularly spaced first and second arms with remote ends, mounted within said housing for pivoting about a first axis between first and second positions, wherein said remote end of said first arm, when said element is in said first position, pinches closed said insert between said remote end and said portion of said peripheral wall to which said insert is adjacent, at a location along said insert down-flow of the intersection of said conduit with said insert, and wherein said remote end of said second arm, when said element is in said second position, pinches closed said flushing conduit between said remote end and said portion of said peripheral wall to which said conduit is adjacent.

4,372,346

ELECTRICAL WARP THREAD-MONITORING APPARATUS FOR A LOOM

Wilhelm Hutter, Roggwil, Switzerland, assignor to Aktiengesellschaft Adolph Saurer, Arbon, Switzerland

Filed Aug. 15, 1980, Ser. No. 178,640

Claims priority, application Switzerland, Sep. 3, 1979, 7938/79

Int. Cl.³ D03D *51/28*

U.S. Cl. 139—353 **3 Claims**

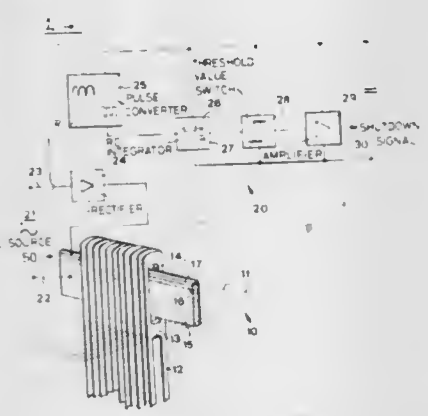

1. An electrical warp thread-monitoring apparatus for a loom for monitoring warp threads, comprising:

a plurality of drop wires;

each of said drop wires being supported by a re-related warp thread;

current rails extending over the entire width of the warp threads;

said current rails being electrically connected with one another upon rupture of at least one of the warp threads by the related drop wire which drops into contact with said current rails;

means defining an alternating-current circuit in which there are conjointly arranged said current rails in order to generate a shutdown signal for the loom in the presence of rupture of a warp thread;

an alternating-current voltage source connected by means of said current rails with an input side of said alternating-current circuit;

said means defining said alternating-current circuit comprising:

a voltage-dependent pulse converter having an input side; and

a bridge rectifier;

said alternating-current voltage source being connected by means of said bridge rectifier with said input side of said voltage-dependent pulse converter; and

said pulse converter delivering an output signal constituting a base signal for the shutdown signal.

4,372,347

HYBRID WOVEN GLASS CLOTHS

Larry D. Olson, Viroqua, Wis., assignor to UOP Inc., Des Plaines, Ill.

Filed Dec. 28, 1981, Ser. No. 334,500

Int. Cl.³ D03D *15/00*

U.S. Cl. 139—420 C **4 Claims**

1. A hybrid glass cloth woven from yarn comprising a warp yarn of fiberglass and a fill yarn of a boron nitride.

4,372,348

BLOWING NOZZLE HAVING A SHIELDED BLOWING APERTURE, ADAPTED FOR USE IN A SHUTTLELESS WEAVING MACHINE

Paul Gunneman, Medevoort 15, 5731 RM Mierlo, Netherlands

Filed Feb. 6, 1981, Ser. No. 232,160

Claims priority, application Netherlands, Feb. 11, 1980, 8000836

Int. Cl.³ D03D *47/28*

U.S. Cl. 139—435 **3 Claims**

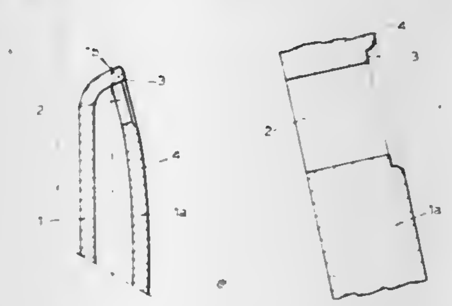

1. A blowing nozzle, for supplying a jet of fluid to assist in transporting a weft thread through a weaving shed, which is in the form of a hollow needle having at least one blowing aperture in its side wall, the outer end of said aperture being surrounded by a first surface which is recessed relative to a second surface on the needle adjacent to said first surface, characterized in that the second surface has a rounded edge adjacent to the first surface.

4,372,349

METHOD FOR WEAVING WITH A SHUTTLELESS WEAVING MACHINE, AND WEFT PREPARATION DEVICE TO BE USED THEREIN

Hubert P. Van Mullekom, Deurne, Netherlands, assignor to Ruti-Te Strake B.V., Deurne, Netherlands

Filed Sep. 4, 1980, Ser. No. 184,111

Claims priority, application Netherlands, Sep. 24, 1979, 7907093

Int. Cl.³ D03D *47/36*

U.S. Cl. 139—452 **2 Claims**

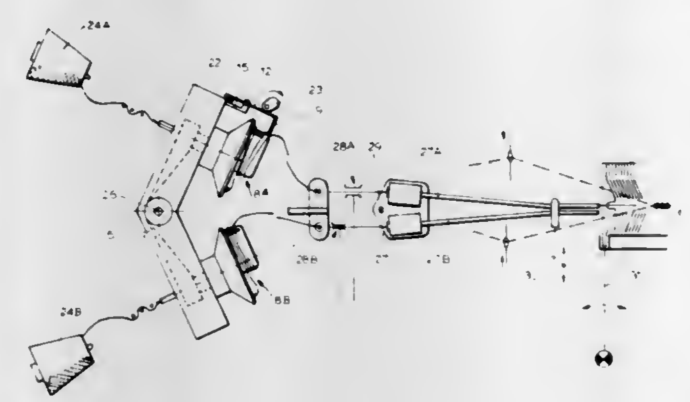

1. A method of preparing wefts on a plurality of winding drums for withdrawal by a weft conveyor, comprising the steps of continuously winding a separate thread at a constant rate on each drum, and releasing on each drum successive groups of the resulting windings for withdrawal from the drum, each such group of windings having a total length corresponding to a weft length, wherein the improvement comprises the steps of withdrawing by means of a weft conveyor a plurality of such groups in succession from one drum, and then blocking the withdrawal of a group of windings which have been released on said drum while withdrawing a group of windings which have been released on a drum other than said drum.

4,372,350

MACHINE FOR THE AUTOMATIC PRODUCTION OF WELDED LATTICE GIRDERS

Gerhard Schmidt; Klaus Ritter; Gerhard Ritter, and Josef Ritter, all of Graz, Austria, assignors to EVG Entwicklungs-und-Verwertungs Gesellschaft mbH, Graz, Austria

Filed Jul. 29, 1980, Ser. No. 173,672

Claims priority, application Austria, Aug. 3, 1979, 5340/79

Int. Cl.³ B21F *15/08, 27/10*

U.S. Cl. 140—112 **2 Claims**

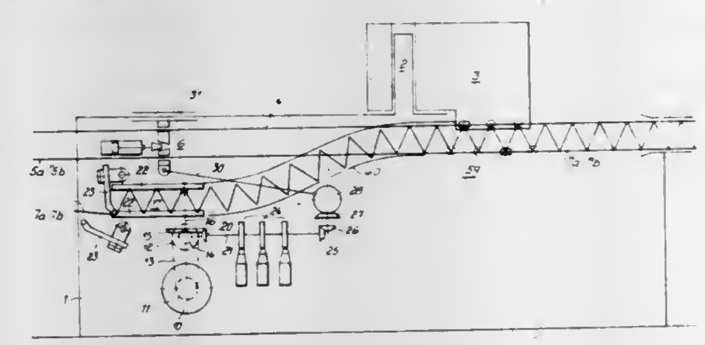

1. In a machine for the automatic production of a welded lattice girder which consists of an upper chord, at least one lower chord and zigzag strutting between said upper chord and said lower chord defining periodic bending regions, said machine comprising a feed mechanism for the stepwise feeding of wire material for said chords, a continuously working bending mechanism for the production of a stock of said zigzag strutting, and an intermittently working welding mechanism for welding the bending regions of said strutting to said chords; the improvements wherein between said bending mechanism and said welding mechanism there are provided guides adapted to embrace said bending region of said zigzag strutting and leading substantially tangentially into paths along which said upper and lower chord wires are respectively fed, whereby said guides form storage means for said strutting in which said strutting is arranged to be resiliently contracted and expanded in a controlled manner, and wherein said welding mechanism includes two holding fingers adjacent said feed path for said lower chord wire and offset with respect to one another in the direction of feed by one wavelength of said zigzag strutting and means causing said holding fingers to be inserted into adjacent lower bending regions in said zigzag strutting to hold the strutting in place during pauses used for welding between two steps in the stepwise feed of said chord wires to thereby fix the required relative positions between said strutting and said chord wires during welding, the welding being done at a lower bending region which is spaced from the adjacent lower bending regions held in place by the holding fingers by at least one wavelength of zigzag.

4,372,351

WIRE TREE BASKETS AND A METHOD AND APPARATUS FOR FORMING SAME

John W. Myers, Greensboro, N.C., assignor to Hemco Wire Products, Inc., Greensboro, N.C.

Filed Aug. 3, 1981, Ser. No. 289,661

Int. Cl.³ B21F *15/08, 27/10*

U.S. Cl. 140—112 **3 Claims**

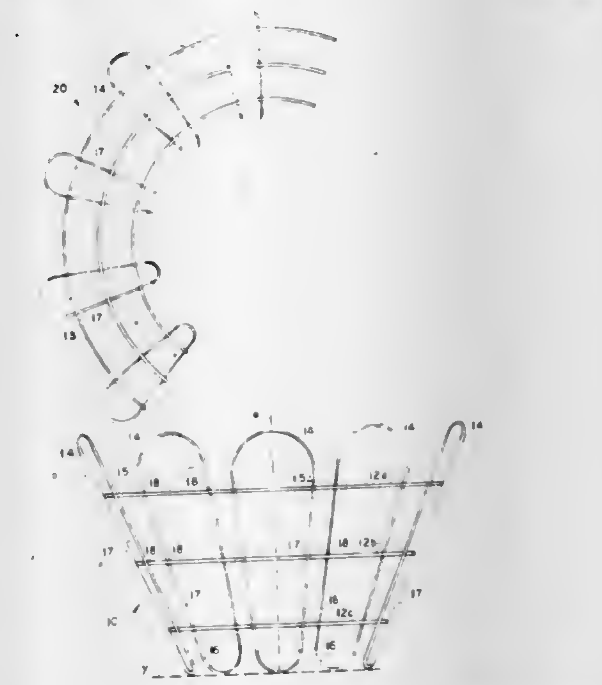

1. A method of producing a truncated cone shaped wire basket formed of a plurality of wire rings of differing diameter joined by vertical wire members, the steps of said method comprising:

(a) cutting a wire strand material of desired metallic content and gauge into a plurality of first segments with each segment being of a length corresponding to the circumference of one of the various circular rings which form the side wall of the completed basket;

(b) cutting additional lengths of said wire material into second segments which are of a length to form the vertically extending, horizontally spaced wire members which connect the circular rings to form the completed baskets;

(c) bending each one of said first segments into an arc having a prescribed radius less than that of a complete circle;

(d) arranging the plurality of wire arcs on a substantially flat surface in concentrically arranged spaced relationship to each other;

(e) placing said second wire segments onto said flat surface in horizontally spaced relationship to each other, and into engagement with the arcuate segments;

(f) welding all intersecting points of said arcuate segments and said vertical segments to form a basket flat;
(g) subjecting said basket flat to a bending machine to shape said flat into a truncated conical shape; whereby the ends of said arcuate segments will be in substantially end-to-end, abutting relationship to form a circle;
(h) joining the ends of said arcuate segments to close the circular rings, thereby completing the wire basket.

4,372,352
FOAM DISPENSING APPARATUS
Pasquale J. Coppola, Meriden, and Gerald V. Dever, Jr., Milford, both of Conn., assignors to Olin Corporation, New Haven, Conn.
Filed Mar. 9, 1981, Ser. No. 241,899
Int. Cl.³ B65B *3/04*
U.S. Cl. 141—1 **15 Claims**

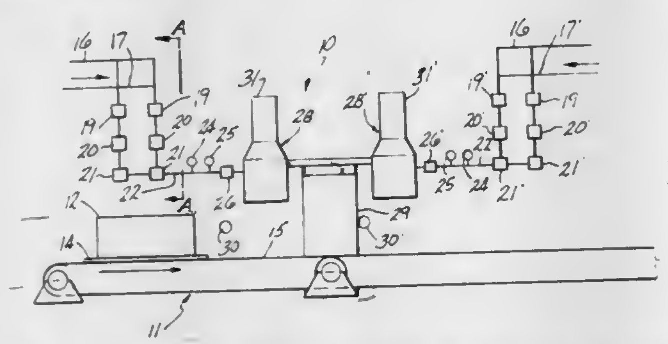

10. A method of filling building blocks with an insulating foam utilizing foam dispensing apparatus having a plurality of orifice rods with predetermined sized orifices therein to control the impingement pressure of the plural feed foam mix components as the components enter the mixing chamber within each foam dispensing head; comprising the steps of:
(a) feeding a plurality of blocks with predetermined cavities therein in arrayed banks along a predetermined path of travel;
(b) automatically sensing the presence of a bank of blocks at a first predetermined point along the predetermined path;
(c) preselecting a predetermined sized orifice for each orifice rod;
(d) automatically activating the foam dispensing apparatus in response to the sensing of the bank of blocks to cause the plural feed foam mix components to be passed through orifices into a mixing chamber within each foam dispensing head at a predetermined impingement pressure to ensure the proper admixing of the plural foam mix components into a mixed foam;
(e) automatically injecting the mixed foam into the cavities of the blocks in the sensed bank; and
(f) automatically ceasing injecting the mixed foam into the cavities of the blocks after a predetermined amount of time.

4,372,353
ARRANGEMENTS FOR SENSING THE PRESENCE OF LIQUID IN A VAPOR LINE
Tom Weas, Cincinnati, Ohio, assignor to Dover Corporation, New York, N.Y.
Continuation-in-part of Ser. No. 45,204, Jun. 4, 1979, abandoned. This application Nov. 21, 1980, Ser. No. 208,998
Int. Cl.³ B65B *3/18, 57/14*
U.S. Cl. 141—206 **25 Claims**

1. An arrangement for sensing the presence of liquid in a vapor line including a body having an inlet communicating with a source of liquid and vapor and an outlet communicating with an area for receiving vapor, said body having passage means therein connecting said inlet and said outlet, said body having first and second valves disposed in said passage means, said body having a seat for one of said first and second valves, said one valve of said first and second valves having a seat for the other of said first and second valves, means to continuously urge one of said one and other valves into engagement with its seat, and the other of said one and other valves being movable into engagement with its seat when a predetermined quantity of liquid flows into said inlet of said body in a predetermined period of time to block said passage means whereby the presence of liquid is sensed, and the one valve of said one and other valves being moved out of engagement with its seat if the pressure upstream of said inlet exceeds a predetermined pressure after the other valve of said one and other valves has engaged its seat.

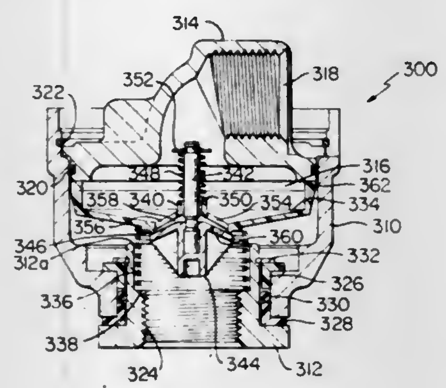

4,372,354
CONDIMENT DISPENSER
Albert R. Moore, Miami, Fla., assignor to Burger King Corporation, Miami, Fla.
Filed Apr. 28, 1980, Ser. No. 144,155
Int. Cl.³ B67D *5/54*
U.S. Cl. 141—361 **10 Claims**

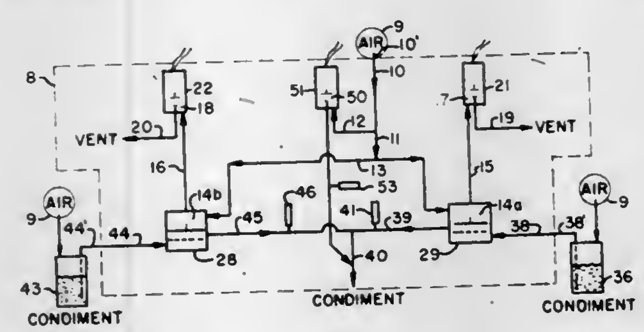

1. A dispenser for dispensing a predetermined amount of condiment on a sandwich, said dispenser comprising:
a source of condiment;
a source of pressurized gas;
first conduit means communicating with said source of condiment;
a discharge means;
second conduit means communicating with the discharge means;
first valve means communicating with said first and second conduit means selectively connecting the first and second conduit means in flow communication for selective flow of condiment from the source to the discharge means, said first valve means including a first valve which is normally closed to prevent flow of condiment, said first valve being held normally closed at least partially by fluid pressure, said first valve means including a second valve operably associated with said first valve for selectively reducing said fluid pressure allowing said first valve to open;
first control means operably connected to said second valve for selectively effecting opening and closing of said second valve, said first control means being operable for automatically regulating the amount of condiment dispensed to a predetermined amount, said first control means including a first actuator means operable for initiating operation of the first control means;

third conduit means communicating with said source of pressurized gas;
fourth conduit means communicating with said source of pressurized gas and said first valve to provide the fluid pressure to hold said first valve normally closed;
fifth conduit means communicating with said discharge means;
a third valve communicating with said third and fifth conduit means selectively connecting said third and fifth conduit means in flow communication, said third valve being operably connected to said first control means whereby said third valve is open when said first and second valves are open; and
a stand having said discharge means and said first actuator means mounted thereon.

4,372,355
WOOD TURNING LATHE APPARATUS
Wallace B. Force, Jr., and Francis D. Jefferson, both of Wabash, Ind., assignors to Diehl Machines, Div. of Waltham Watch Company, Wabash, Ind.
Filed Nov. 17, 1980, Ser. No. 207,138
Int. Cl.³ B27C *7/00;* B23B *23/00*
U.S. Cl. 142—55 **7 Claims**

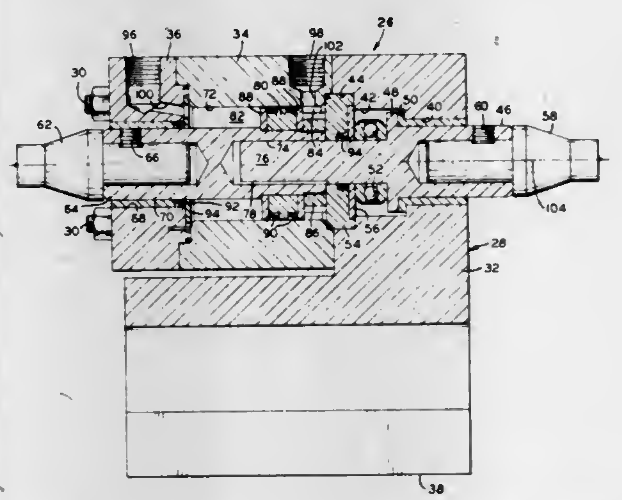

1. For use in a plural station wood turning lathe, a head and tail stock mounting apparatus comprising a supporting block unit, a head stock work center carried by said supporting block unit for rotation about a given axis but held against axial movement, a tail stock work center carried by said supporting block unit for rotation about either the same axis or one parallel thereto and also for limited reciprocable axial movement, and means for selectively reciprocating said tail stock work center, said means including a hydraulic power cylinder carried by said supporting block unit having a piston operatively connected to said tail stock work center, said power cylinder and piston including a shaft journalled for rotation within said block unit, said block unit having a sealed stationary cylindrical chamber coaxially surrounding at least a portion of said shaft, a piston element reciprocably and rotatably received within said chamber and dividing said chamber into two variable volume compartments, said piston element being connected to said shaft for imparting reciprocable movement thereto and for being rotated thereby, and two ports in said block unit, one for each compartment, whereby pressure fluid may be introduced into and exhausted from said compartments, respectively, for reciprocating said piston element.

4,372,356
SIZING TOOL FOR DOWEL ENDS
James O. Conklin, 502 Tribune Bldg., Terre Haute, Ind. 47807
Filed Mar. 20, 1981, Ser. No. 245,935
Int. Cl.³ B23B *27/00*
U.S. Cl. 142—56 **4 Claims**

1. A hand-held tool for accurately sizing as to diameter a workpiece turning on a lathe, said tool comprising a generally triangular plate having truncated apices, a handle rigidly secured to one apex of the plate, a sharpened transverse edge formed at the truncated apex opposite said one apex, one face of said plate having a rectilinear groove extending from the third apex of said plate to the opposed base margin of the plate, an inverted generally T-shaped bar having its base-portion positioned in the plane of said plate and extending beyond said

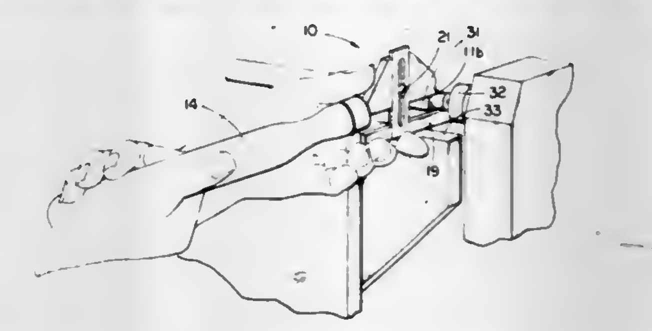

sharpened transverse edge of the plate, the leg portion of said bar being adjustably accommodated within said groove to permit adjustable spacing between said bar base portion and said sharpened plate edge, whereby said tool may be positioned so that said bar base portion may engage the underside of the turning workpiece and said sharpened edge of the plate may engage the turning workpiece reducing its diameter to that of the adjusted spacing between said bar base portion and said sharpened plate edge.

4,372,357
MACHINE FOR PROFILING WOOD PANEL TO SIMULATE LAP SIDING
Virgil Steiling, Tacoma, Wash., assignor to Globe Machine Manufacturing Company, Tacoma, Wash.
Continuation-in-part of Ser. No. 1,020, Jan. 5, 1979, Pat. No. 4,263,947. This application Dec. 19, 1980, Ser. No. 218,271
Int. Cl.³ B27C *1/00*
U.S. Cl. 144—114 R **2 Claims**

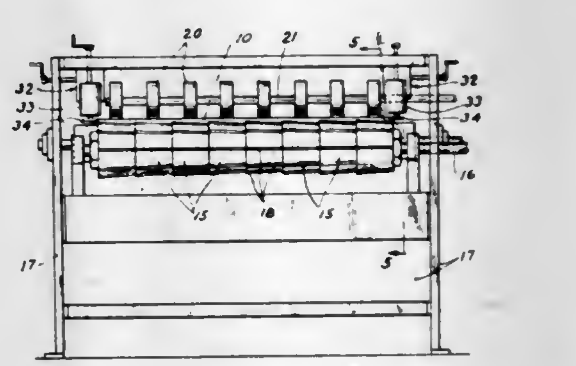

1. In a machine for shaping flat surfaces of relatively large flat panels of material capable of being cut by woodworking tools, a frame; upper and lower driven feed rolls carried by said frame, positioned to receive therebetween relatively large, flat, rectangular panels, and move said panels longitudinally through the machine; power driven cutter means positioned in the path of travel of panels through the machine to cut material from the board and provide a profile on one surface thereof simulating a plurality of rows of lap siding, said power driven cutter means comprising a plurality of planer type cutter heads secured in end-to-end abutting relation on said driven shaft; and peripheral knives carried by each cutter head having cutting edges extending from end to end of the head and positioned to move in a cone-shaped path when the head is rotated to profile one surface of the panel so it will have the appearance of lap siding.

4,372,358
JOINTER-PLANER IN-FEED TABLE
Thomas G. Glore, Easley, S.C., assignor to The Singer Company, Stamford, Conn.
Filed Nov. 6, 1980, Ser. No. 204,406
Int. Cl.³ B27C *1/14*
U.S. Cl. 144—117 R **10 Claims**

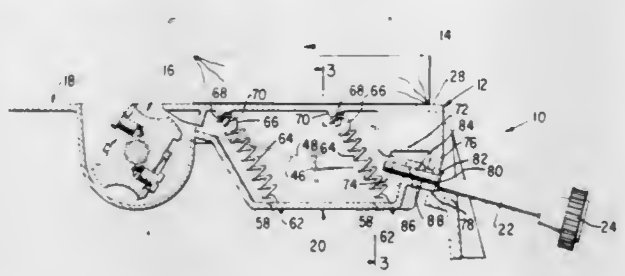

1. In-feed table assembly for mounting on a supporting base structure of a jointer-planer having a generally cylindrical cutter assembly rotatably mounted with the supporting base structure, the assembly comprising a table support of generally wedge-shaped configuration having a pair of generally parallel triangular side wall portions and a base panel extending therebetween carrying a ramp comprising a pair of generally parallel inclined generally flat ways, a table of generally wedge-shaped configuration carried on said ways and movable therealong to therewith define a generally rectangular block-shaped assembly of variable height, spring means for resiliently holding said table on said table support, manual adjusting means for moving the said table along said ramp, and means for adjustably affixing said table support to said supporting base structure.

4,372,359
METHOD FOR DEPLOYMENT OF A TOWED ARRAY FROM A SWATH SHIP
Paul A. Hanson, La Mesa; John D. Hightower, San Diego, both of Calif., and Alvah T. Strickland, Kaneohe, Hi., assignors to The United States of America as represented by the Secretary of the Navy, Washington, D.C.
Filed Apr. 30, 1981, Ser. No. 258,988
Int. Cl.³ B63B *21/66*
U.S. Cl. 114—244 **11 Claims**

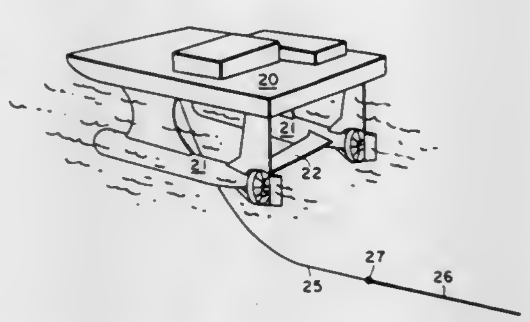

1. A method for deploying and recovering an apparatus to be towed in the water by a towcable attached between the apparatus and a vessel having a plurality of submerged hulls, comprising the steps of:
maneuvering the vessel in a reverse direction while paying out the apparatus from the underside of the vessel, the towcable and apparatus then streaming out in front of the vessel;
paying out the towcable at such a rate as to cause a section of the towcable near the vessel to sink beneath the vessel until that section forms a loop downward in the water; and
turning the vessel in a substantially pivotal direction to rotate above the loop;
whereby, when the vessel maneuvers into a straight forward direction from the turn it will pass over and clear the loop thereby causing the apparatus to be towed behind the vessel.

4,372,360
SPLITTING AXE
Harold E. Eichlin, Q-West Apt. L-207, Quakertown, Pa. 18951
Filed Jul. 29, 1981, Ser. No. 288,058
Int. Cl.³ B27L *7/00*
U.S. Cl. 145—2 R **12 Claims**

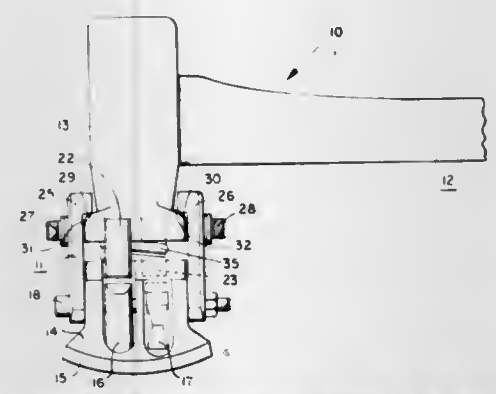

1. An implement particularly suited for splitting firewood, comprising: a head assembly and means connected to said head assembly for propelling the head assembly toward a log, said head assembly including:
a base member,
a blade member having an edge adapted to engage the wood,
means mounting said blade member for movement relative to said base member,
means interposed between said base and blade members for biasing said blade member away from said base member,
a pair of toggle links pivotally mounted to said blade member, each link having a working edge disposed to one side of said blade adjacent its edge and having a head on the other side of said blade remote from its edge,
striker means carried on said base member in spaced relation with said link heads for contacting said heads and rotating the links relative to one another, and
means connected to said toggle links for elastically urging said heads into proximity with said striker means,
whereby the biasing means enables the blade edge to penetrate the wood to a predetermined depth before the striker means engages the heads of the toggle links to augment the splitting action of the blade edge.

4,372,361
MULTI-PURPOSE TURNING TOOL
Carl Whiteford, 3 High Point Rd., Westport, Conn. 06880
Filed May 19, 1980, Ser. No. 151,368
Int. Cl.³ B25G *1/00*
U.S. Cl. 145—61 R **8 Claims**

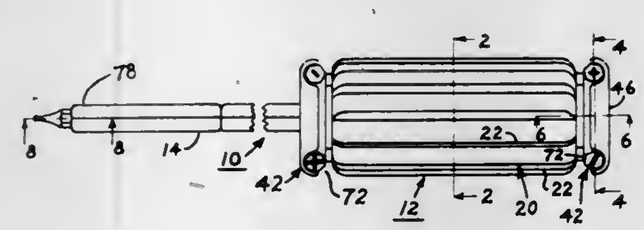

1. A multi-purpose turning tool comprising:
A. a handle adapted to be held in the hand of a user for simultaneously applying a longitudinal force and a turning force to the tool, said handle comprising
1. a gripping member adapted to be surrounded by the fingers and a portion of the palm of a user's hand for applying said turning force, said gripping member being generally elongate, and
2. a thrust plate rotatably connected to said gripping member in position to be pressed upon by the heel portion of the palm of the user's hand for applying said longitudinal force, said thrust plate being formed as a disc-like member rotatably connected to one end of said gripping member and including a plurality of tool bit storage compartments formed therein for holding excess tool bits, and
B. a shank connected to said gripping member for rotation with said gripping member, said shank being connected to the other end of said gripping member and having a socket at the free end thereof for receiving and holding one of a plurality of interchangeable tool bits.

4,372,362
TOOL
Min H. Ahn, 5111 Maple Rd., Richmond, British Columbia, Canada
Filed Feb. 23, 1981, Ser. No. 237,175
Int. Cl.³ B25G *1/08*
U.S. Cl. 145—63 **12 Claims**

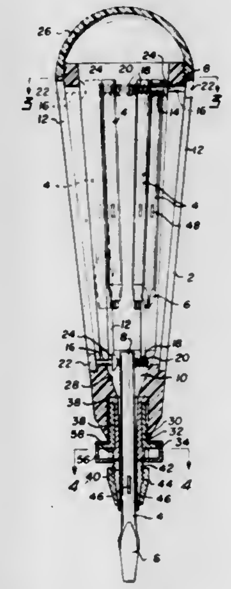

1. A tool comprising a housing;
a plurality of bits located within the housing, each bit having a working end to protrude from the housing and an inner end located in the housing;
a pathway in each bit adjacent said inner end;
a first opening in the housing to allow a preselected bit to protrude;
means to grip the preselected bit;
a plurality of second openings, positioned circumferential of the housing and extending longitudinally of the housing;
a plurality of shafts, each extending through an associated second opening and through a pathway in a bit;
resilient means on each shaft urging each bit radially outwardly;
whereby a bit may be selected by pushing on its associated shaft and moving the shaft downwardly towards the first opening, the gripping means then being operated to grip the selected bit with its working end protruding from the first opening in the housing.

4,372,363
BAG CLOSURE
Robert H. Schmeling, 5431 Via Aquario, San Diego, Calif. 92111
Filed May 4, 1981, Ser. No. 260,244
Int. Cl.³ B65D *33/06, 33/30*
U.S. Cl. 150—4 **2 Claims**

1. A bag enclosure comprising:
(a) a pair of bails hinged together at their ends to define a hinge axis and having a front side which defines the open mouth of a bag engaged thereon and a back side comprising the other side;
(b) one of the bails having a retainer extending therefrom which includes a component generally parallel to said axis, and the other of said bails having a detent which passes around the radial inside of said generally parallel component to be positively engaged on the back side thereof as said bails are closed, said bails being dimensioned and hinged to bias said detent outwardly as same rotates beneath and behind said retainer, whereby a bag having a flexible mouth engaged around said bail can be alternatively positively shut or open;
(c) said bails being resiliently hinged together in order to maintain contact between said detent and said retainer as the detent is moved relative to the retainer to lock or unlock the enclosure;

(d) said retainer and detent comprising loop handles extending from respective ones of said bails with the former being wider than the latter to permit the detent handle to pass through the retainer handle; and
(e) each of said handles defining a spanner bar which engages the other of said spanner bars when said closure is closed, and at least one of said spanner bars being bowed in the direction tangential to a rotational arc established around said axis and toward the other spanner bar, whereby said detent spanner bar passes through, up past, and over said retainer spanner bar against both radial and angular biasing to positively lock said handles together.

4,372,364
DOOR PROTECTOR
Edward R. Katz, 4847 Cambridge Dr., Dunwoody, Ga. 30338
Filed Nov. 9, 1981, Ser. No. 319,207
Int. Cl.³ E06B *7/28*
U.S. Cl. 150—52 R **8 Claims**

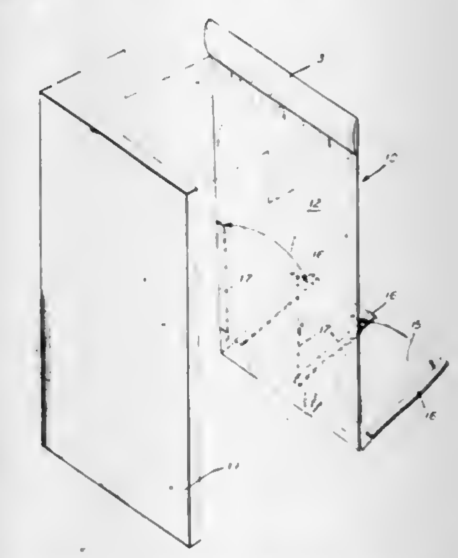

1. A door protector to prevent damage caused by contact with moving furniture or the like comprising a flexible padded body portion of sufficient size to cover one side of a door substantially from side-to-side and top-to-bottom, and pocket means carried by one end of said body portion and being engageable with the top edge portion of a door for the purpose

of suspending the protector on the door and positioning it laterally relative to the door.

4,372,365
SAFETY WHEELS
Isao Osada, Izumi, and Shoichi Sano, Tokorozawa, both of Japan, assignors to Ohtsu Tire and Rubber Co. Ltd. and Honda Giken Kogyo Kabushiki Kaisha, both of, Japan
Continuation of Ser. No. 9,584, Feb. 5, 1979, abandoned. This application Jul. 11, 1980, Ser. No. 168,342
Claims priority, application Japan, Mar. 14, 1978, 53-29438
Int. Cl.³ B60C *17/00, 5/00, 15/00*
U.S. Cl. 152—158 **3 Claims**

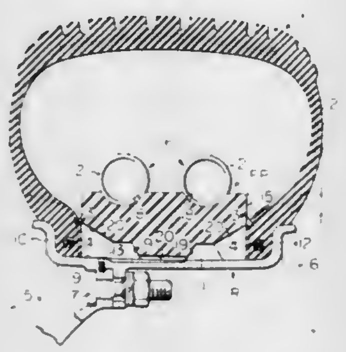

1. An improved safety wheel apparatus employing a split rim formed of at least two portions in an axial direction of the rim including two rim flanges and rim bases; a tubeless tire having bead portions and a ground-engaging tread portion being mounted on said rim, and a flat protector device incorporated into an air chamber surrounded by said tubeless tire and said split rim, said protector device serving to support said tubeless tire when air sealed within said tubeless tire is lost, the improvement wherein: said flat protector device comprises a flat protector seat portion annularly fitted at its radially inner surface along the outer peripheral surface of said split rim to hold said bead portions of said tubeless tire in cooperation with both rim flanges of said split rim, said flat protector seat portion being formed at its radially outer surface with at least two axially spaced apart annular grooves, said seat portion being defined by a web member formed of elastic material having joined end portions formed into an annular configuration, and at least two annular pipes of circular cross section formed independently of each other and free from mutual interaction, said pipes being annularly mounted in and held against axial movement by said annular grooves, spaced apart from the tread portion of said tire during the normal operation of said tire while being placed into supporting engagement with said tire tread portion, and free from engagement with the remaining portion of the tire during a puncture of said tire, each of said pipes having a pair of ends connected with each other by connector means, said connector means being engaged in an outer periphery of said seat portion, whereby said flat protector seat portion cooperates with said both rim flanges to strongly clamp the tire bead portions therebetween while said pipes act to support reactions transmitted from the road surface to the tire tread portion, said reactions being further transmitted from said tire tread portion to said rim bases through said flat protector seat portion so that said tire tread portion is supported by flat protector when air sealed within the tire is lost.

4,372,366
METHOD AND APPARATUS FOR NON-DESTRUCTIVE INSPECTION OF TIRES
Doyle L. Dugger, Muscatine, Iowa, assignor to Bandag Incorporated, Muscatine, Iowa
Division of Ser. No. 31,961, Apr. 19, 1979, Pat. No. 4,285,235. This application Feb. 12, 1981, Ser. No. 233,967
Int. Cl.³ B29H *21/08*
U.S. Cl. 157—13 **12 Claims**

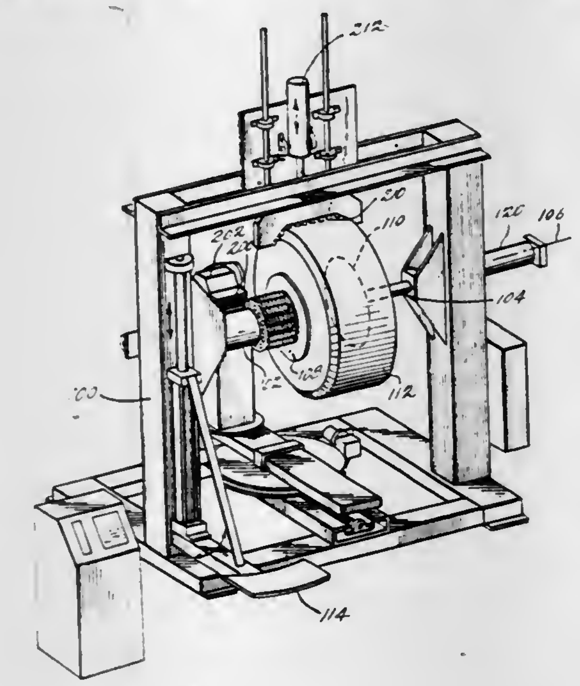

1. Apparatus for buffing and for nondestructively testing a buffed tire carcass, said apparatus comprising:
opposing circular rings for sealingly engaging the corresponding rims of said tire,
tire inflation means for inflating said tire after engagement by said rings,
buffing means for rotating said inflated tire and for buffing away the outer tread wall surfaces to provide a substantially uniform outside tread wall surface on the resulting tire carcass,
ultrasonic testing means disposed both inside and outside said inflated tire for measuring the relative strengths of ultrasonic acoustic signals transmitted through different areas of said buffed tread wall as it is rotated thereby non-destructively testing the buffed tire carcass.

4,372,367
ROLLER BLINDS
Umberto Baldanello, 44 Via Meucci, and Giuseppe Zottino, 276, Via Roma, both of Spinea, Italy
Filed May 19, 1980, Ser. No. 151,287
Claims priority, application Italy, Jun. 12, 1979, 12637 A/79; Oct. 16, 1979, 84145 A/79
Int. Cl.³ A47G *5/02;* **E06B** *9/204*
U.S. Cl. 160—310 **5 Claims**

1. A drive mechanism for a winding roller upon which an element is to be wound, comprising:
(a) a motor gear holder disposed within said winding roller;
(b) a reversible electric drive motor disposed within said motor gear holder;
(c) reduction gear means drivably connecting said motor to said winding roller;
(d) a first limit switch actuable to switch off said drive motor in a rolled up position of said element wound on said winding roller, and a second limit switch actuable to switch off said drive motor in an unrolled position of said element wound on said winding roller;
(e) a first and a second control means associated respectively to the said first and second limit switches, each control means being gearably drivable by the winding roller to actuate the respective limit switch, wherein each control means comprises a roll counting mechanism provided with at least two sequentially arranged counting rollers, the first counting roller being gearably connected with the winding roller, and the last counting roller presenting a limit switch actuator for actuating the respectively associated limit switch, and wherein the maximum length between the rolled up position and the unrolled position of said element wound on the winding roller corresponds to a angular rotation of said last counting roller of less than 360°;
(f) a stationary bearing housing provided at one end of said winding roller, inside which bearing housing there are disposed the said first and second limit switches and the said first and second control means; wherein said counting rollers of each roll counting mechanism are each provided with a heart-shaped zero-setting cam cooperable with a

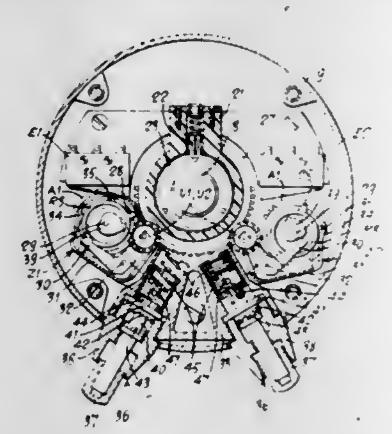

zero-setting tappet and are movable relative to fixedly mounted transmission rollers and said zero-setting tappets by a manually operable adjusting device alternately to an inward position and an outward position, whereby in said inward position said counting rollers engage said transmission rollers, said first counting roller is in geared connection with said winding roller, said associated limit switch is actuable by said switch actuator of said last counting roller, and said zero-setting tappets are spaced from said associated zero-setting cams, and whereby in said outward position said counting rollers are spaced from said transmission rollers, said first counting roller is free of said winding roller, said associated limit switch is free from actuation by said switch actuator of said last counting roller, and said zero-setting tappets engage said associated zero-setting cams.

4,372,368
BLOCKING APPARATUS FOR FIXING A METAL BLOCK TO THE FINISHED FACE OF A SEMI-FINISHED SPECTACLE LENS BLANK
Gerard Lombard, Velaines, France, assignor to Essilor International (Compagnie Generale d'Optique), France
Filed Sep. 26, 1980, Ser. No. 191,130
Claims priority, application France, Sep. 26, 1979, 79 23922
Int. Cl.³ B22D *19/00*
U.S. Cl. 164—332 **17 Claims**

1. A blocking apparatus for fixing a metal block to the finished face of a semi-finished spectacle lens blank by casting low-melting metal into a mold contacting the finished face of the blank, which comprises:
(a) a housing,
(b) an open mold supported by said housing and having a fixed section and a movable section arranged for rotary contact with said fixed section, said fixed mold section having an annular seat for supporting a finished blank face and said movable section having relief elements adapted to form positioning reference means in said metal block and to define a system of three orthogonal axes, said system having a first axis coincident with a central axis of said annular seat in an initial position of said movable mold section, and a second axis adapted to be brought into exact alignment with a prescribed cylinder axis for a semi-finished lens blank, the fixed and movable mold sections contact having cooperating partially spherical surfaces defining a ball-joint connection having its center of rotation lying on said central axis of the annular seat, the movable mold section being rigidly attached to a shaft with the shaft having a longitudinal axis coincident with the central axis of said annular seat in the initial position of said movable mold section, said shaft extending along a direction remote from said annular seat,
(c) means associated with said housing for holding said lens blank on said annular seat,

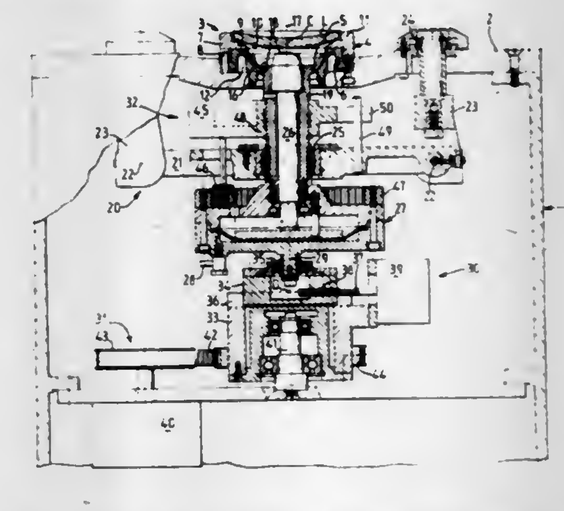

(d) casting means associated with said housing for delivering molten low-melting metal into a cavity defined by said open mold through a casting duct formed in said mold,
(e) control means operatively connected to said shaft for orienting and tipping the movable mold section about said center of rotation of said ball-joint connection in order to define a mold cavity for forming a metal block having a prescribed prism value and a prescribed orientation of the prism axis and to align said relief elements with the prescribed cylinder axis.

4,372,369
CONTINUOUS PROCESS FOR FORMING SHEET METAL FROM AN ALLOY CONTAINING NON-DENDRITIC PRIMARY SOLID
Merton C. Flemings, Cambridge, Mass., and Tooru Matsumiya, Kawasaki, Japan, assignors to Massachusetts Institute of Technology, Cambridge, Mass.
Filed Sep. 19, 1980, Ser. No. 188,645
Int. Cl.³ B22D *11/06*
U.S. Cl. 164—482 **5 Claims**

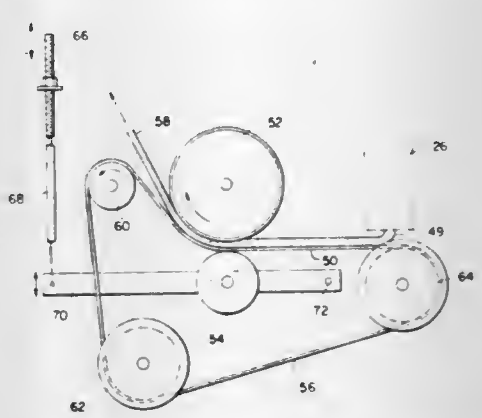

1. The method for shaping a homogeneous mixture of liquid-solid metal composition wherein said solid comprises discrete degenerate dendrites or nodules from a first metal composition which, when frozen from its liquid state, without agitation forms a dendritic structure, which comprises heating said first metal composition to melt said first metal composition in a first zone, passing the melted first metal composition into an agita-

tion zone connected to said first zone, vigorously agitating and cooling the melted first metal composition to solidify a portion thereof and to form primary solids comprising discrete degenerate dendrites or nodules while preventing the formation of interconnected dendritic networks in said agitation zone, said primary solid comprising up to about 80 weight percent of said liquid-solid metal composition, passing said liquid-solid metal composition from said agitation zone onto a belt which is moving relative to an outlet from said agitation zone, cooling the portion of said liquid-metal composition in contact with said belt to solidify a portion thereof, passing said partially solidified metal composition into a forming zone including a rotor that contacts said mixture wherein said partially solidified metal composition is formed under pressure and controlling the fraction solid of said mixture of liquid-solid metal, the deformation force in said forming zone and the rate at which said liquid-solid metal enters said forming zone in order to minimize intradendritic or intergranular cracks in the shaped composition while minimizing or preventing flow of said mixture outside of said forming zone.

4,372,370
ROTOR SUPPORT
Richard F. Stockman, Friendship, N.Y., assignor to The Air Preheater Company, Inc., Wellsville, N.Y.
Filed Aug. 19, 1981, Ser. No. 294,258
Int. Cl.^{3} F28D *19/00*
U.S. Cl. 165—8 **4 Claims**

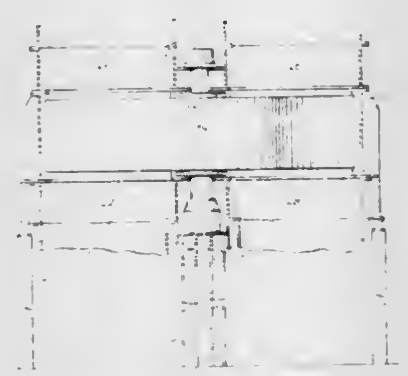

1. A rotary regenerative heat exchange apparatus having a rotor including an upright rotor post and a concentric rotor shell spaced therefrom to provide an annular space therebetween, a mass of heat absorbent material carried in the annular space between the rotor post and the rotor shell, a housing surrounding the rotor in spaced relation thereto, spaced ducts at opposite ends of the rotor adapted to provide inlet and outlet ducts for a heating fluid and for a fluid to be heated, a support bearing supporting the rotor post for rotation of the rotor post and concentric rotor shell about its vertical axis, means for rotating the rotor about is vertical axis, as support column adapted to carry the support bearing, and a plurality of support pedestals subjacent the housing, said support pedestals for the housing being structurally independent from the support column for the rotor whereby the rotor housing will effect a compressive force upon each pedestal independent from the compressive force of the rotor upon the support column thereby precluding sympathetic movement therebetween.

4,372,371
TRUNNION AIR SEAL
Roderick J. Baker, Belmont, N.Y., assignor to The Air Preheater Company, Inc., Wellsville, N.Y.
Filed Oct. 13, 1981, Ser. No. 310,567
Int. Cl.^{3} F28D *19/00*
U.S. Cl. 165—9 **6 Claims**

1. Regenerative heat exchange apparatus including a rotor having a vertical rotor post, an upper trunnion integral with the rotor post extending upward therefrom, a lower trunnion extending down from the lower end of the rotor post, a rotor shell positioned concentrically around the rotor post adapted to provide an annular space for a mass of heat absorbent material, housing means surrounding the rotor including inlet and outlet openings for a heating fluid and for a fluid to be heated together with axially movable sector plates that direct the heating fluid and the fluid to be heated through the heat absorbent material of the rotor, a support bearing adapted to support the lower trunnion for rotation about its vertical axis, a guide bearing around the upper trunnion adapted to preclude lateral movement thereof, a first sealing means between the upper trunnion and the rotor housing adapted to preclude the flow of fluid therebetween, said sealing means comprising an annular

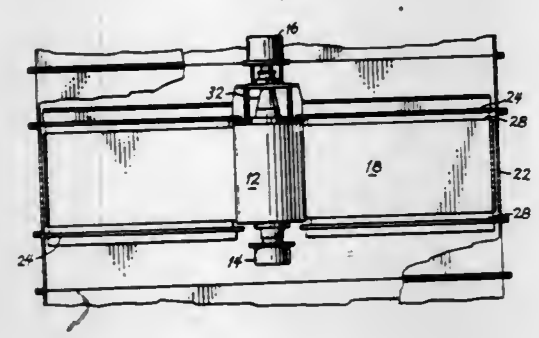

plate that concentrically surrounds the upper trunnion, an annular housing carried by said annular plate, said annular housing having an open side that confronts the trunnion to comprise an air seal that precludes fluid flow thereby, a source of pressurized sealing fluid, means for supplying the pressurized fluid to said air seal, spool means depending from said annular plate surrounding the trunnion and having a laterally extending rim that supports the radially inner end of an adjacent sector plate, and packing means carried by the rim of said spool means intermediate the sector plate and the spool means adapted to provide an independent sealing means that precludes the flow of heat and fluid from the rotor.

4,372,372
SHOWER BATH ECONOMIZER
Raymond Hunter, 2112 Ivy St., Chattanooga, Tenn. 37404
Filed Jan. 26, 1981, Ser. No. 228,331
Int. Cl.^{3} F24H *3/00*
U.S. Cl. 165—47 **8 Claims**

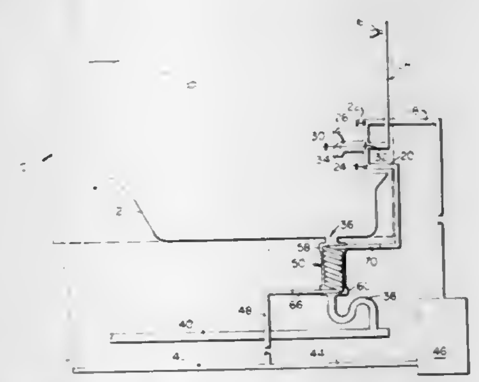

1. In a shower bath closet having cold and hot water supply means including a cold water pipe, a spent water drain, and a trap communicating said drain with a sewerage conduit, apparatus for preheating the cold water supplied by the cold water pipe to the water supply means to effect a reduction in the quantity of hot water necessary for a shower bath, said apparatus comprising: a heat exchanger including an elongated substantially cylindrical housing intermediate said drain and said trap, said housing having a spent water inlet at one end connected in flow communication with said drain and a spent water outlet at the opposite end connected in communication with said trap, whereby spent water exiting said drain flows through said heat exchanger prior to entry into said trap, at least one substantially cylindrical continuous helical coil having a central annulus within and extending substantially the length of said housing, said coil being spaced within said housing to define an uninterrupted annular space extending the length of said coil to provide a linear flow path, a core disposed within the central annulus of said coil forming a baffle, said core including means for preventing flow of spent water through said central annulus and for directing the spent water into the uninterrupted annular space for passage of spent water over the surface of the coil and through the uninterrupted annular space, means connecting one end of said coil to said cold water pipe, and means connecting the other end of said coil to said cold water supply means.

4,372,373
CASING FOR BUILDING WORKS
Hans Haugeneder, Unterer Markt 8, A-3335 Weyer, and Erich Panzhauser, Gentzgasse 129, A -1180 Vienna, both of Austria
Filed Feb. 14, 1980, Ser. No. 121,577
Claims priority, application Austria, Feb. 15, 1979, 1192/79
Int. Cl.^{3} F24H *3/02*
U.S. Cl. 165—54 **33 Claims**

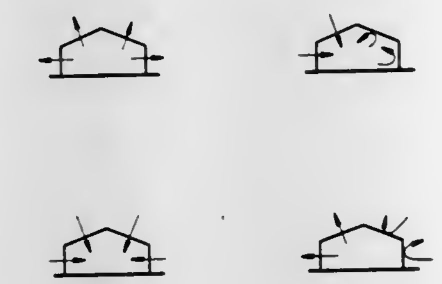

1. A system for air conditioning a building in either a cooling mode or in a heating mode, comprising:
- means, including a layer of heat absorbing and heat exchanging material, permeable to air flow, forming a wall of said building, and
- an outer casing arranged along said wall spaced from said layer for creating air flow through said layer controlled such that it is directed (a) during cooling mode operation from inside said building into the space between the wall and the outer casing, and (b) during heating mode operation from said space into the inside of said building,
- a permeable inner lining arranged on the opposite side of the layer of heat absorbing and exchanging material from said outer casing and spaced from said heat absorbing and exchanging layer, and
- a heat storing layer located between said heat absorbing and heat exchanging layer and said outer casing.

4,372,374
VENTED HEAT TRANSFER TUBE ASSEMBLY
Marlow Lee, Clawson, Mich., assignor to Ateliers des Charmilles S.A., Geneva, Switzerland
Continuation-in-part of Ser. No. 112,393, Jan. 15, 1980. This application Jul. 8, 1980, Ser. No. 166,957
Int. Cl.^{3} F28F *11/00*
U.S. Cl. 165—70 **18 Claims**

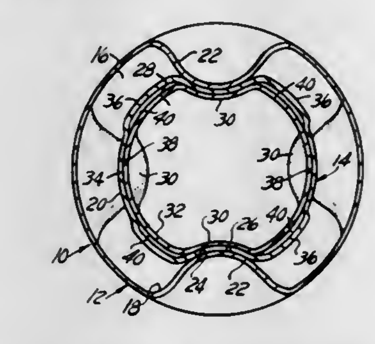

1. A vented heat transfer tube comprising a first tubular member having an interior wall surface, a second tubular member disposed within said first tubular member and having an exterior wall surface spaced apart from the interior wall surface of said first tubular member, and a plurality of projections each extending from said interior wall surface of said first tubular member and having an end engaged in a corresponding recess formed in said exterior wall surface of said second tubular member, said projections being diametrally disposed by pairs, wherein said second tubular member comprises a pair of tubular conduit members disposed one within the other, the exteriorly disposed conduit member being shrunk onto the interiorly disposed conduit member such as to provide said second tubular member with a double wall thickness, at least one continuous bulge formed in the wall of one of said conduit members causing a portion of said wall to be disposed spaced apart from the wall of the other of said conduit members for defining a channel extending from end to end of said second tubular member, and at least one opening to the ambient provided in said channel, wherein said bulge is formed in the wall of said exteriorly disposed conduit member.

4,372,375
HEAT EXCHANGER
Michael P. Bond, Crawley, England, assignor to The A.P.V. Company Limited, Crawley, England
Filed Jul. 15, 1980, Ser. No. 169,132
Claims priority, application United Kingdom, Aug. 8, 1979, 7927611
Int. Cl.^{3} F28F *3/00*
U.S. Cl. 165—70 **4 Claims**

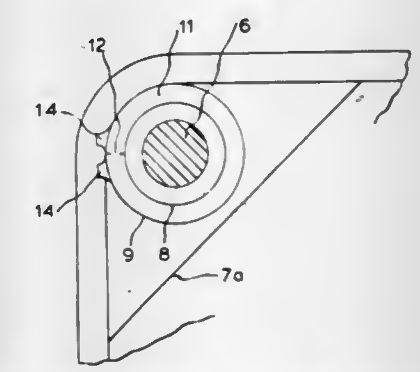

1. In a plate heat exchanger wherein adjacent plates forming the flow spaces for one heat exchange medium are welded together in pairs around the peripheries of the plates and around the through holes forming the ports carrying the other medium through the welded pairs of plates, whereas the flow spaces for the other medium are sealed by flexible gaskets: the improvement that the through holes forming the ports for the said one medium are sealed from the flow spaces for the other medium and from the ambient space by a duplex gasket arrangement with a sealed space between the gasketing.

4,372,376
HEAT PUMP APPARATUS
Paul A. Nelson, Wheaton, and Jeffrey S. Horowitz, Woodridge, both of Ill., assignors to The United States of America as represented by the United States Department of Energy, Washington, D.C.
Filed Dec. 9, 1980, Ser. No. 214,807
Int. Cl.^{3} F28D *15/00*
U.S. Cl. 165—104.12 **8 Claims**

1. A heat pump apparatus comprising:
- a housing
- a plurality of metal hydride reactor beds supported by the housing with at least a portion of said beds being arranged in a pattern, each of the beds being operable by sequential treatment with a plurality of heat transfer fluids in a plurality of processing stages; and
- valve means positioned adjacent said pattern of beds and including means for separating said beds of said pattern

into groups, each group for individual treatment in one of said processing stages, and means for simultaneously di-

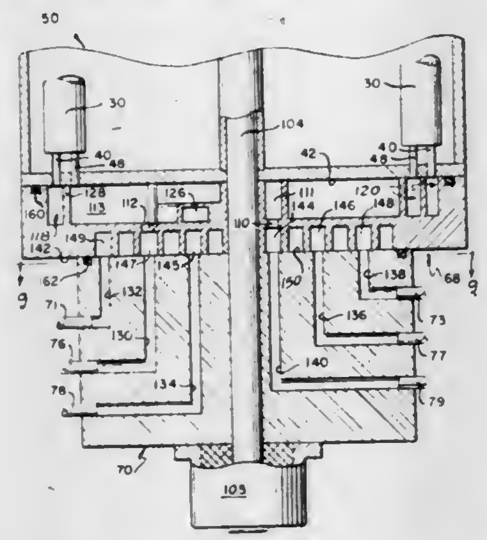

recting a plurality of said heat transfer fluids to said groups of beds so that a plurality of said processing stages are carried out simultaneously.

4,372,377

HEAT PIPES CONTAINING ALKALI METAL WORKING FLUID

James F. Morris, Fairview Park, Ohio, assignor to The United States of America as represented by the Administrator of the National Aeronautics and Space Administration, Washington, D.C.

Filed Mar. 16, 1981, Ser. No. 243,682
Int. Cl.³ F28D *15/00*

U.S. Cl. 165—104.26 4 Claims

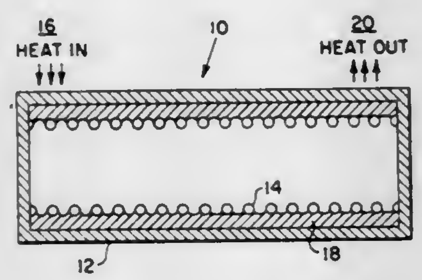

1. Apparatus for transferring heat from a source in a hot corrosive environment to a reciever remote from said source using a high temperature corrosive working fluid comprising

a container fabricated from a superalloy containing cobalt, nickel, chromium, tungsten, and iron extending from said heat source to said receiver,

capillary means (a wick) adjacent to the inner surface of said container,

a lithium (an alkali metal) working fluid in said container for transporting heat from the source end of said container to the reciever end of said container in a vapor state and returning from said receiver end to said source end through said capillary means in a liquid state, and

a corrosion inhibiting element selected from the group consisting of thorium, hafnium, lanthanum, and scandium alloyed with said superalloy to resist corrosion from both said hot corrosive environment of said source and said working fluid.

4,372,378

SHUT-IN DEVICE FOR STOPPING THE FLOW OF HIGH PRESSURE FLUIDS

Jerrold V. Powers, Jr., Albuquerque, N. Mex., assignor to The BDM Corporation, McLean, Va.

Filed Mar. 18, 1981, Ser. No. 245,150
Int. Cl.³ E21B *36/00*

U.S. Cl. 166—57 35 Claims

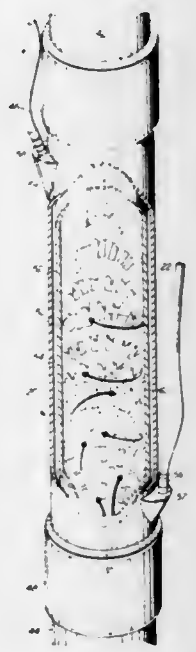

1. An apparatus for impeding the flow of an effluent through a path by forming a frozen plug of the effluent within the path, said apparatus comprising:

a. a tubular member located within the path of the effluent, said tubular member including a structural outer wall and an inner wall, said outer and inner walls being substantially cylindrical and concentric with each other, said outer and inner walls bounding a volume therebetween, said inner wall having an outer surface facing said outer wall and an inner surface opposite the outer surface, the path of the effluent being bounded by the inner surface of said inner wall;

b. means for circulating a refrigerated fluid through the volume bounded by said outer and inner walls for removing heat from said inner wall in order to cool effluent in heat-exchange contact therewith; and

c. a plurality of flow deflectors each having an end mounted to the inner surface of said inner wall, each of said flow deflectors extending substantially flush against the inner surface of said inner wall in a stowed position when refrigerated fluid is not being circulated through the volume bounded by said outer and inner walls, and each of said flow deflectors being responsive to the circulation of refrigerated fluid through the volume bounded by said outer and inner walls for being deployed to a position projecting away from the inner surface of said inner wall and into the path of the effluent for cooling the effluent and for providing support for the frozen plug of the effluent within said tubular member.

4,372,379

ROTARY DRIVE ASSEMBLY FOR DOWNHOLE ROTARY PUMP

Emanuel Kulhanek, and John Aboussafy, both of Edmonton, Canada, assignors to Corod Manufacturing Ltd., Nisku, Canada

Filed Oct. 6, 1981, Ser. No. 309,004
Int. Cl.³ E21B *43/00*

U.S. Cl. 166—68.5 4 Claims

1. A rotary drive assembly, for use with a well assembly and a drive string to be suspended and rotated in the production string of the well assembly, comprising:

a frame connectable with the well assembly;

a spindle rotatably mounted on the frame, said spindle forming an axial bore through which the drive string may extend;

said spindle forming means for locking with a clamping means;

disengagable means for clamping on to the drive string, said

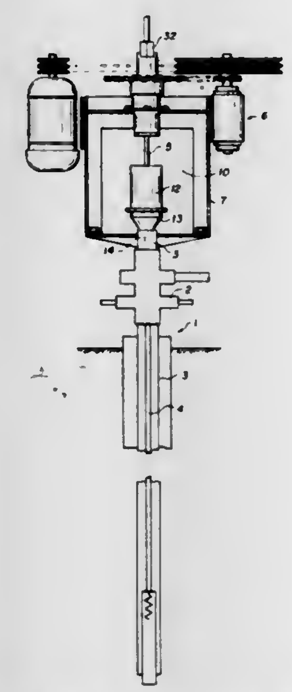

clamping means being adapted to seat on the spindle, whereby the drive string may be suspended from the spindle by the clamping means, said clamping means and locking means being adapted to interconnect the spindle and drive string for rotation together;

and means associated with the spindle for rotating the latter to thereby rotate the drive string.

4,372,380

METHOD FOR DETERMINATION OF FRACTURE CLOSURE PRESSURE

Michael B. Smith, and Kenneth G. Nolte, both of Tulsa, Okla., assignors to Standard Oil Company (Indiana), Chicago, Ill.

Filed Feb. 27, 1981, Ser. No. 238,877
Int. Cl.³ E21B *47/06, 43/26*

U.S. Cl. 166—250 6 Claims

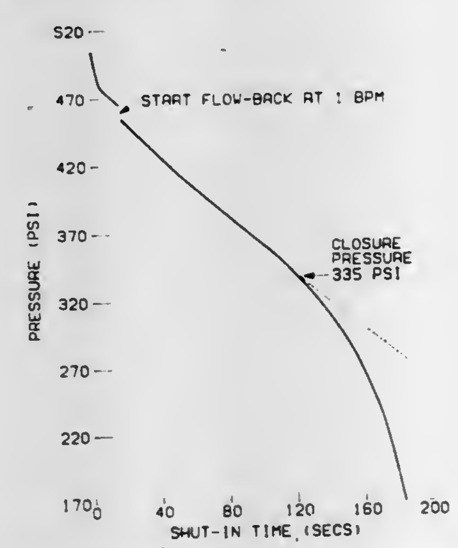

1. A method of determining the minimum in-situ stress of an underground formation penetrated by a well, comprising:

(a) injecting fluid at a certain rate into the formation to open fractures in the formation;

(b) backflowing the injected fluid at a rate less than the injection rate; and

(c) monitoring the well fluid pressure during step (b) to establish the pressure at which the fractures close.

4,372,381

METHOD FOR RECOVERY OF OIL FROM TILTED RESERVOIRS

James M. McMillen, Arlington, Tex., assignor to Mobil Oil Corporation, New York, N.Y.

Filed Apr. 10, 1981, Ser. No. 253,120
Int. Cl.³ E21B *43/22*

U.S. Cl. 166—263 24 Claims

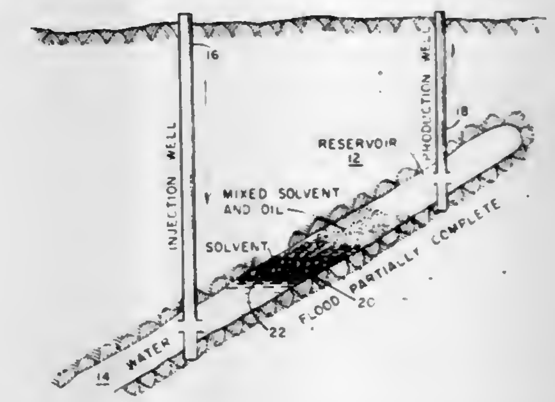

1. A method for recovering oil from a subterranean oil reservoir penetrated by at least one injection well and at least one production well spaced apart in the reservoir, said reservoir having in one area an appreciable dip and having a water zone in fluid communication with and directly below an oil zone to form an oil-water interface, said method comprising the steps of:

(a) injecting a quantity of solvent for the oil into said reservoir via said injection well in the vicinity of said oil-water interface having a density less than the reservoir oil so as to contact the reservoir oil, finger upwardly into the oil, dissolve and lower said reservoir oil's viscosity;

(b) thereafter injecting water into the reservoir via said injection well to drive the solvent through the reservoir and adjusting the rate of the injection so that the interface between the solvent and the water is maintained in a substantially horizontal position to minimize fingering of the water into the solvent; and

(c) recovering oil from said production well.

4,372,382

METHOD AND SAMPLER FOR COLLECTING A NON-PRESSURIZED WELL FLUID SAMPLE

John F. Rooney, and Robert G. Pindell, both of Houston, Tex., assignors to Texaco Inc., White Plains, N.Y.

Filed Dec. 15, 1980, Ser. No. 216,742
Int. Cl.³ E21B *49/08*

U.S. Cl. 166—264 9 Claims

1. A method for collecting a non-pressurized sample of fluid from a well in a sampler sample chamber having interconnected upper and lower valves in upper and lower ends of the same chamber to permit the pressure in the sample chamber to equalize with the ambient comprising the steps of,

(a) actuating upwardly both upper and lower valves of the sample chamber for opening and ease of purging of the sample chamber with submerging of the chamber in the well, and

(b) venting the sample fluid through a substantially vertical portion of a vent passage from the chamber to outside the sampler upon actuating both upper and lower valves downwardly substantially simultaneously for actuating

the valves and maintaining a true, representative sample of fluid in the sample chamber and to permit the pressure in

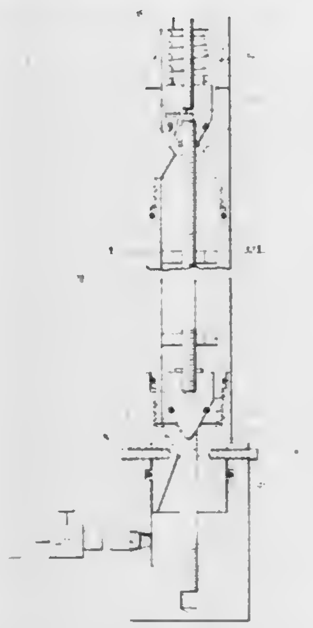

the sampler to equalize with the ambient for recovery at the surface.

4,372,383

IN SITU SEPARATION OF BITUMEN FROM BITUMEN-BEARING DEPOSITS

Robert K. Ames, Seattle, Wash., assignor to Reflux Limited, Seattle, Wash.

Continuation-in-part of Ser. No. 236,047, Feb. 19, 1981. This application Jun. 4, 1981, Ser. No. 270,261

Int. Cl.³ E21B *43/22, 43/40*

U.S. Cl. 166—266 **10 Claims**

1. A method for in situ removal of bitumen from a subterranean deposit comprising solid matter and bitumen, said bitumen in said deposit comprising greater than about 1% by weight of the total deposit, said method comprising the steps of:

injecting into said deposit a composition having an inverse critical solution (ICS) temperature in a two-phase system with water and being selected from a member of or mixtures of members of the groups of amines having the formula

$$R_1-N(-R_2)-R_3$$

wherein

R_1 is a hydrogen or an alkyl radical,

R_2 and R_3 are alkyl radicals having from 1 to 6 carbon atoms or alkenyl radicals having from 2 to 6 carbon atoms,

the total number of carbon atoms in the amine molecule being in the range of from 3 to 7, inclusive, said composition being present in an amount sufficient to dissolve substantially all of said bitumen in said deposit, said composition and said dissolved bitumen forming a mixture,

removing said mixture from said deposit, and thermally separating said mixture into a bitumen component and a composition component.

4,372,384

WELL COMPLETION METHOD AND APPARATUS

Charles W. Kinney, Houston, Tex., assignor to GEO Vann, Inc., Houston, Tex.

Filed Sep. 19, 1980, Ser. No. 188,813

Int. Cl.³ E21B *33/124, 43/04*

U.S. Cl. 166—278 **43 Claims**

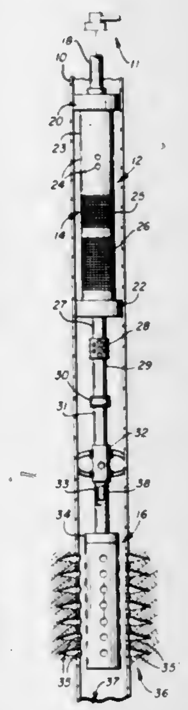

38. A tool string suspended on a single pipe string within a cased borehole for completing a pay zone located downhole in a single trip, comprising:

a screen means suspended on the pipe string for screening the production from the pay zone;

perforating means suspended on the pipe string for perforating the cased borehole;

means for actuating said perforating means;

means suspended from said pipe string forming a gravel passageway for conducting gravel flowing down said pipe string into the cased borehole surrounding said screen means; and

means suspended from said pipe string forming a return passageway extending from said screen means to the surface.

42. Method of completing a well, comprising

lowering into a cased wellbore on a single string of tubing gravel packing means including screen means and perforating means,

perforating the well by actuating the perforating means,

flowing gravel down through the tubing string, through the gravel packing means and into the cased wellbore surrounding the screen means, and

flowing produced fluid from the perforations through the gravel, through the screen, and uphole to the surface of the ground.

4,372,385

METHOD OF PRETREATING AN UNDERGROUND FORMATION FOR SILICON POLYHALIDE CONSOLIDATION

David R. Davies, Rijswijk, Netherlands; Edwin A. Richardson, Houston, Tex., and Marinus Van Zanten, Rijswijk, Netherlands, assignors to Shell Oil Company, Houston, Tex.

Continuation-in-part of Ser. No. 161,239, Jun. 20, 1980, abandoned. This application May 14, 1981, Ser. No. 263,451

Claims priority, application United Kingdom, Dec. 17, 1979, 7943333

Int. Cl.³ E21B *33/138*

U.S. Cl. 166—281 **3 Claims**

1. A process for increasing the rock strength of an imcompletely water-wetted gas-producing reservoir, which is susceptible to impairment by water-blocking and is, or is likely to become, unconsolidated, comprising:

adjusting the water content in a portion of the resevoir to the extent necessary to provide a significant but small proportion of water within that portion;

injecting a pretreatment gaseous fluid which reacts with water to form a strong aqueous acid capable of increasing the water-wetness of the surfaces of the grains within the treated portion of the reservoir;

readjusting the water content of the treated portion of the reservoir to the extent necessary to ensure the presence of a significant but small proportion of water within the aqueous liquid which wets the grains; and,

injecting a sand consolidating gaseous mixture of vaporous silicon polyhalide having a water reactivity at least substantially equivalent to that of silicon tetrachloride and substantially inert gas, in order to convert a significant proportion of the grain-wetting water to a rock-strengthening silica-gel, without an undue reduction in permeability.

4,372,386

STEAM INJECTION METHOD AND APPARATUS FOR RECOVERY OF OIL

Craig A. Rhoades, 9025 Wilshire Blvd., No. 215, Beverly Hills, Calif. 90211, and Thomas Meeks, 3656 Virginia Ave., Lynwood, Calif. 90262

Filed Feb. 20, 1981, Ser. No. 236,447

Int. Cl.³ E21B *43/24, 36/00*

U.S. Cl. 166—300 **15 Claims**

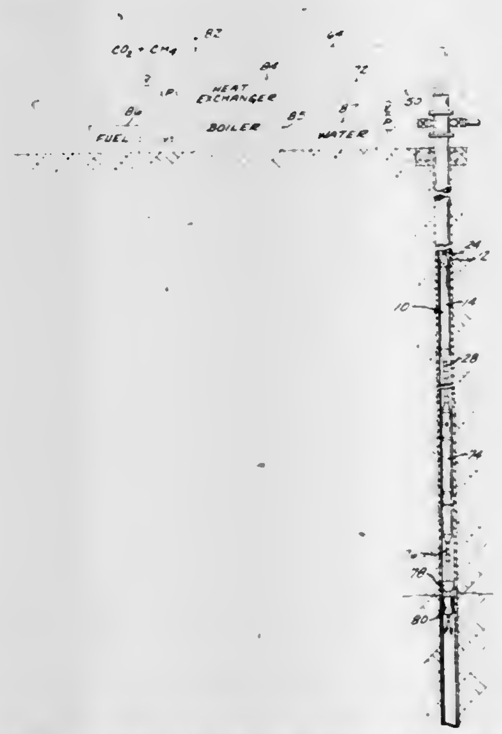

1. A method for generating heat to produce steam for injection into an oil bearing formation penetrated by a borehole, said method comprising:

selecting a working fluid from that class of fluids having first components adapted to undergo an endothermic first reaction upon subjection to reaction heat energy to form second components, wherein said second components are adapted to undergo a reverse, exothermic second reaction to form said first components and release substantially all of said reaction heat energy;

applying said reaction heat energy to said first components to form said second components;

conveying said second components down said borehole and inducing said second reaction to release substantially all of said reaction heat energy and form said first components;

conveying water down said borehole into heat exchange relation to said first components to cool said first components and utilize said reaction heat energy to convert said water to steam; and,

injecting said steam into said formation.

13. Apparatus for generating heat to produce steam for injection into an oil bearing formation penetrated by a borehole, said apparatus comprising:

methanation reaction means slidably insertable within said borehole and including a reactor portion having a methanation catalyst for catalytically promoting a methanation reaction of carbon monoxide and hydrogen to form carbon dioxide and methane, accompanied by the release of reaction heat energy, and further including a heat exchanger portion adapted to receive water and directly exposed to said reaction heat energy for conversion of said water into steam by said reaction heat energy including means for discharging said steam into said borehole, said means for discharging said steam being coupled to said heat exchanger portion;

reforming reactor means for surface location, and adapted to heat carbon dioxide and methane to reform carbon monoxide and hydrogen;

supply means for conveying carbon dioxide and methane to said reforming reaction means; and

water supply means coupled to said heat exchanger portion.

4,372,387

DOWNHOLE TOOL WITH RATCHET

John T. Brandell, Duncan, Okla., assignor to Halliburton Company, Duncan, Okla.

Division of Ser. No. 57,093, Jul. 12, 1979, Pat. No. 4,246,964. This application Nov. 4, 1980, Ser. No. 204,057

Int. Cl.³ E21B *43/12*

U.S. Cl. 166—334 **3 Claims**

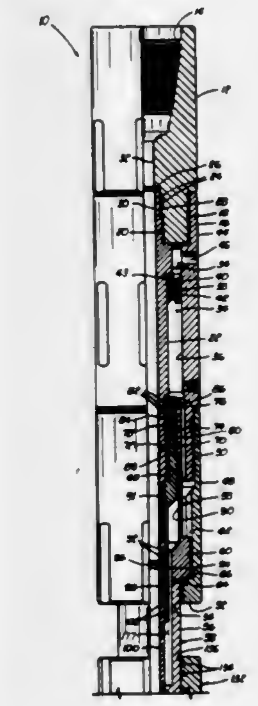

1. A downhole tool of the type, comprising:

first and second cylindrical body members;

an outer intermediate cylindrical member having a first end slidingly received within said first body member and a second end rotatingly received within said second body member;

an inner intermediate member telescopingly received within said outer intermediate member;

a ratchet means for moving said inner intermediate member longitudinally relative to said second cylindrical body member when said first cylindrical body member is rotated relative to said second cylindrical body member, said ratchet means including a plurality of ratchet blocks engaging said inner intermediate member, said ratchet blocks including radially inner ratchet threads engaging a threaded portion of said first cylindrical body member, said ratchet means further including resilient means for urging said ratchet blocks radially inward;

and

wherein said outer intermediate member includes a first cylindrical inner surface closely engaging radially outer surfaces of said ratchet blocks to maintain said radially inner ratchet threads of said ratchet blocks in engagement with said threaded portion of said first cylindrical body member, so that when said first cylindrical body member is rotated relative to said second cylindrical body member, said inner intermediate member is moved longitudinally relative to said second tubular body member so long as said radially outer surface of said ratchet blocks are closely engaged with said first cylindrical inner surface of said inner intermediate member.

4,372,388
SUBSURFACE CONTROL VALVE
Neal G. Skinner, Duncan, Okla., assignor to Halliburton Company, Duncan, Okla.
Filed Nov. 24, 1980, Ser. No. 209,621
Int. Cl.[3] E21B *34/12*
U.S. Cl. 166—334 **8 Claims**

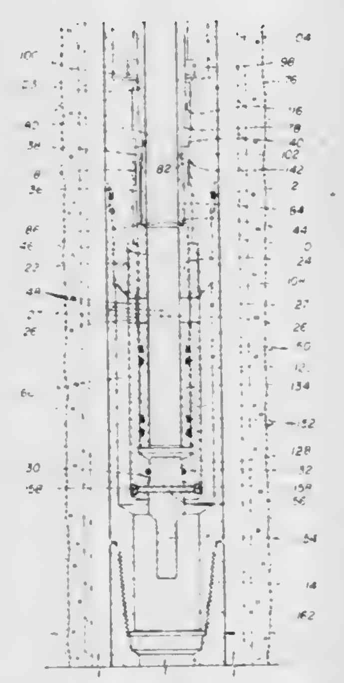

1. A subsurface control valve, comprising:
a stinger assembly including a substantially cylindrical housing having an axial bore therethrough, a first annular interior shoulder at the top of said housing bore, a second annular interior shoulder at the bottom of said housing bore, annular bearing means at the lower end of said housing, and first spline means between said first and second annular shoulders on the wall of said housing bore, said housing bore containing at its upper end a coil spring adapted to downwardly bias a stinger slidably mounted in said housing bore, said stinger having an axial bore therethrough, second spline means adapted to cooperate with said first spline means on said housing, exterior threads below said spline means, and valve engagement means at its lowest extent;
a valve assembly having upper, median, and lower communicating bores therein, threads in said upper valve assembly bore adapted to cooperate with said stinger threads, axially closable valve means including a slidable valve sleeve in said median valve assembly bore, spline means between said median valve assembly bore and said valve sleeve adapted to prevent rotational movement therebetween, and port means through the wall of said median valve assembly bore adapted to communicate between said upper and lower valve assembly bores when ports in said valve sleeve are aligned therewith.

4,372,389
DOWNHOLE WATER PUMP AND METHOD OF USE
Joseph T. Hamrick, Roanoke, and Leslie C. Rose, Franklin Heights, both of Va., assignors to Well-Pack Systems, Inc., Fort Worth, Tex.
Continuation-in-part of Ser. No. 803,525, Jun. 6, 1977, abandoned. This application May 23, 1979, Ser. No. 41,797
Int. Cl.[3] E21B *33/127, 43/00*
U.S. Cl. 166—369 **13 Claims**

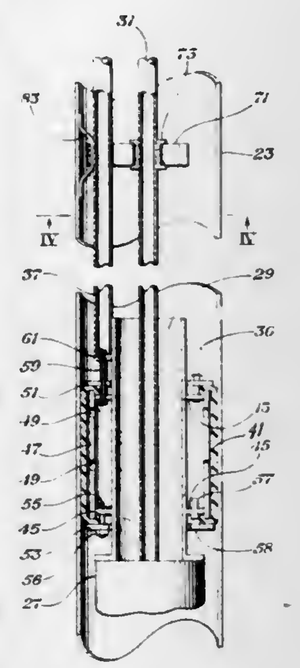

1. A system for pumping water from sub-surface formations to the surface through a cased borehole and a column pipe, comprising:
pump means located in the borehole and having lower inlet means and upper outlet means,
a column pipe coupled to said outlet means of said pump means and extending to the surface through the cased borehole for providing a flow path to the surface,
a drive shaft coupled to said pump means for operating said pump means,
said drive shaft extending to the surface through said column pipe,
power means located at the surface for rotating said drive shaft,
aperture means formed through the wall of said column pipe in the borehole relatively near said pump means for providing a flow path from said column pipe to the annulus between said column pipe and the cased wall of the borehole,
an annular inflatable packer adapted to engage the cased wall of the borehole when inflated, located in the borehole between said inlet means of said pump means and said aperture means formed through said column pipe,
means for use for inflating said packer,
means for deflating said packer
discharge means at the surface in fluid communication with said annulus and with said column pipe for discharging water from said annulus and from said column pipe.

4,372,390
WELL VALVE
John L. Baugh; James W. Montgomery, and Malcolm B. Roach, all of Houston, Tex., assignors to Hughes Tool Company, Houston, Tex.
Filed Sep. 2, 1980, Ser. No. 183,128
Int. Cl.[3] E21B *23/06, 34/12, 33/12*
U.S. Cl. 166—373 **19 Claims**

1. Apparatus comprising:
a. tubular body means, including first internal annular groove means;

b. first sleeve means for positioning generally within said tubular body means;
c. second sleeve means for positioning generally within said first sleeve means wherein said second sleeve means is selectively movable between a first longitudinal position relative to said first sleeve means and a second longitudinal position relative to said first sleeve means;
d. first anchor means mounted on said first sleeve means and selectively radially movable between an extended configuration, wherein said first anchor means may be received in said first groove means, and a retracted configuration, wherein said first anchor means may be withdrawn from said first groove means;
e. said second sleeve means including first surface means which is in registration with said first anchor means when said second sleeve means is in said first position, whereby said first surface means maintains said first anchor means in said extended configuration, and second surface means of lesser outer extent than said first surface means and which is in registration with said first anchor means when said second sleeve means is in said second position, whereby said first anchor means may move to said retracted configuration;

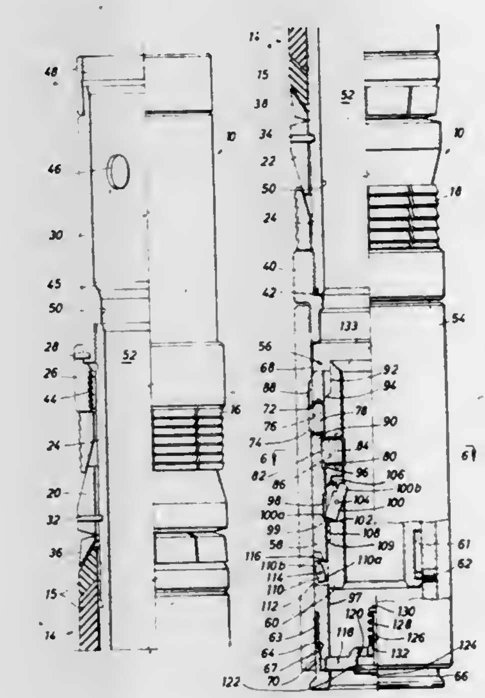

f. first latch means operable when said second sleeve means is in said first position relative to said first sleeve means for preventing movement of said second sleeve means out of said first position;
g. second latch means operable when said second sleeve mens is in said second position relative to said first sleeve means for maintaining said second sleeve means in said second position;
h. whereby said first and second sleeve means may be releasably held against longitudinal movement relative to said tubular body means with said first sleeve means positioned within said tubular body means, and said second sleeve means in said first position relative to said first sleeve means, such that said first surface means maintains said first anchor means in said extended configuration within said first groove means and said first latch means maintains said second sleeve means releasably fixed against longitudinal movement relative to said first sleeve means; and
i. transfer means for selectively disengaging said first latch means and moving said second sleeve means from said first position to said second position relative to said first sleeve means.

4,372,391
SCREW OPERATED EMERGENCY RELIEF AND SAFETY VALVE
Burchus Q. Barrington, Duncan, Okla.; Wilbur P. Clayton, Aberdeen, Scotland, and Gerald D. Jackson, Marlow, Okla., assignors to Halliburton Company, Duncan, Okla.
Filed Oct. 7, 1980, Ser. No. 194,914
Int. Cl.[3] C21B *34/12*
U.S. Cl. 166—373 **16 Claims**

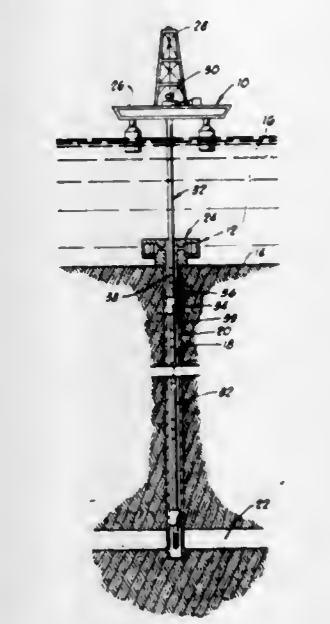

1. A releasable valve apparatus, comprising:
a valve housing having a flow passage therethrough and adapted to be connected to a tubing string;
a flow valve means disposed in said valve housing for opening and closing said flow passage;
a stinger assembly adapted to be connected to said tubing string, said stinger assembly including a stinger mandrel telescopingly received within said valve housing;
an actuating mandrel assembly operably associated with said stinger mandrel and longitudinally movable within said valve housing between first and second positions corresponding to open and closed positions of said flow valve means;
releasable threaded connecting means for releasably interconnecting said valve housing and said stinger assembly; and
motion transfer means for translating rotational motion of said stinger assembly through a first predetermined number of rotations in a first rotational direction relative to said valve housing into longitudinal motion relative to both said stinger assembly and said valve housing of a lower portion of said actuating mandrel assembly connected to said flow valve means, said longitudinal motion being from a first position of said lower portion, corresponding to said first position of said actuating mandrel assembly and said open position of said flow valve means, to a second position of said lower portion, corresponding to said second position of said actuating mandrel assembly and said closed position of said flow valve means; wherein
said valve housing, flow valve means, stinger assembly, actuating mandrel assembly, releasable threaded connecting means, and motion transfer means are so arranged and constructed that, when disconnecting said releasable threaded connecting means, said first predetermined number of rotations of said stinger assembly in said first rotational direction relative to said valve housing causes said lower portion of said actuating mandrel assembly to move to its said second position thereby closing said flow valve means, and an additional predetermined number of rotations of said stinger assembly in said first rotational direction relative to said valve housing is necessary to release said stinger assembly from said valve housing.

4,372,392
FULL OPENING EMERGENCY RELIEF AND SAFETY VALVE

Burchus Q. Barrington, Duncan, Okla., and Wilbur P. Clayton, Aberdeen, Scotland, assignors to Halliburton Company, Duncan, Okla.

Filed Oct. 7, 1980, Ser. No. 194,944
Int. Cl.[3] E21B *34/12*
U.S. Cl. 166—373 33 Claims

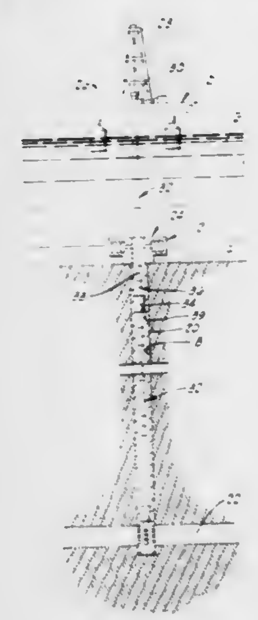

1. A releasable valve apparatus, comprising:
a valve housing having a flow passage therethrough and adapted to be connected to a tubing string;
a full opening ball valve means disposed in said valve housing for opening and closing said flow passage;
a stinger assembly adapted to be connected to said tubing string, said stinger assembly including a stinger mandrel releasably telescopingly received within said valve housing and operably associated with said ball valve means for opening and closing said ball valve means in response to manipulation of said upper portion of said tubing string; and
releasable threaded connecting means for releasably interconnecting said valve housing and said stinger assembly; wherein
said valve housing, ball valve means, stinger assembly and releasable threaded connecting means are so arranged and constructed that, when disconnecting said releasable threaded connecting means, a first predetermined number of rotations of said stinger assembly in a first rotational direction relative to said valve housing is necessary to allow said ball valve means to close said flow passage and an additional predetermined number of rotations of said stinger assembly in said first rotational direction relative to said valve housing is necessary to release said stinger assembly from said valve housing.

4,372,393
CASING BORE RECEPTACLE

John R. Baker, Houston, Tex., assignor to Baker International Corporation, Orange, Calif.

Filed Jun. 16, 1981, Ser. No. 273,805
Int. Cl.[3] E21B *23/02, 33/129, 43/00*
U.S. Cl. 166—382 32 Claims

1. A sealing assembly for establishing sealing integrity in an annular area between a movable fluid transmission conduit and the casing of a subterranean well above a production zone, said assembly comprising:
a casing bore receptacle incorporable in said casing above said production zone, and comprising a casing receptacle sealing bore having a diameter less than the diameter of said casing;
a mandrel incorporable in said fluid transmission conduit;
an annular packoff member having inner and outer axially extending circumferential surfaces, said annular packoff member being insertable between said casing bore receptacle and said mandrel and being releasably carriable on said mandrel;
means on said annular packoff member comprising radially expandable latching means for engaging said casing bore receptacle to prevent movement of said annular packoff member relative to said casing bore receptacle in first and second opposite longitudinal directions;
disengagable means for attaching said annular packoff member to said mandrel and for releasing said annular packoff member from said mandrel after engagement of said annular packoff member with said casing bore receptacle to permit said mandrel to move relative to said annular packoff member in said first and second longitudinal direction said disengagable means comprising means for retaining said radially expandable latching means in a retracted position; and
inner and outer sealing means circumferentially extending along the inner and outer surface of said annular packoff member for establishing sealing integrity between said mandrel and said annular packoff member and between said casing receptacle sealing bore and said annular packoff member.

25. A method of producing fluids in a subterranean well

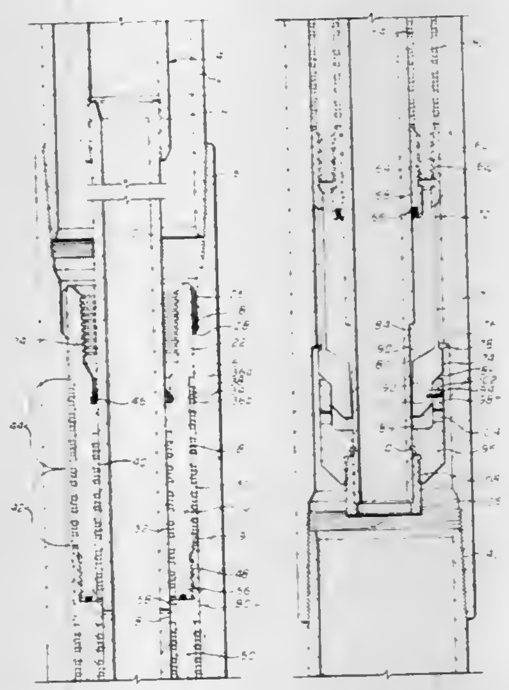

through a fluid transmission conduit insertable within an outer well casing, and for establishing sealing integrity in the annular area between said fluid transmission conduit and said casing and above said production zone, said method comprising the steps of:
incorporating a casing bore receptacle in said casing above said production zone;
incorporating a mandrel in said fluid transmission conduit with an annular packoff member releasably affixed to said mandrel, said annular packoff member having seals on the interior and exterior thereof;
inserting said fluid transmission conduit into said casing;
positioning said annular packoff member with said seals on the exterior thereof in contact with said casing bore receptacle;
engaging said annular packoff member with said casing bore receptacle to prevent longitudinal movement in a downward longitudinal direction;
increasing the pressure within the annulus between said fluid transmission conduit and said casing to increase the force acting on said annular packoff member in an upward direction;
moving said mandrel in an upward direction after increasing the pressure within said annulus to release said annular packoff member from said mandrel; and
engaging said annular packoff member with said casing bore receptacle upon movement of said mandrel in a downward direction to prevent longitudinal movement of said annular packoff member relative to said casing bore receptacle in said upward direction with said seals on the interior of said annular packoff member maintaining sealing integrity as said mandrel moves therein.

4,372,394
MAGNETICALLY DRIVEN PULVERIZER

Theodore H. Allegri, Sr., McLean, Va.

Filed Dec. 22, 1980, Ser. No. 218,696
Int. Cl.[3] A62C *11/00*
U.S. Cl. 169—30 17 Claims

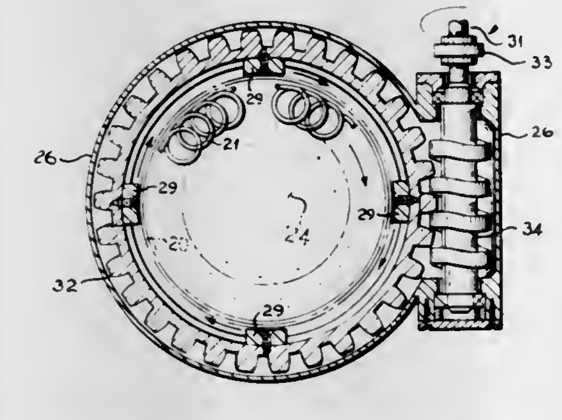

1. In combination with a fire extinguisher having a pressurized container including a throat portion at one end, and a nozzle assembly screwed into the throat portion, the improvement of a magnetically driven mixing means comprising a mixing element within said container adapted to be movable therein to mix the contents of the container in response to an externally generated magnetic field, means for generating said magnetic field, said means for generating said magnetic field including an annular ring member disposed about the container, said ring member being movable longitudinally relative to said container, said ring member having a plurality of horizontally spaced magnets affixed thereto and means for rotatably driving said annular ring member about said container.

4,372,395
STAB WATER SUPPLY SYSTEM

Dillard S. Hammett, Dallas, Tex., assignor to SEDCO, Inc., Dallas, Tex.

Continuation of Ser. No. 89,541, Oct. 29, 1979, abandoned. This application Nov. 9, 1981, Ser. No. 319,725
Int. Cl.[3] A62C *13/24*
U.S. Cl. 169—69 7 Claims

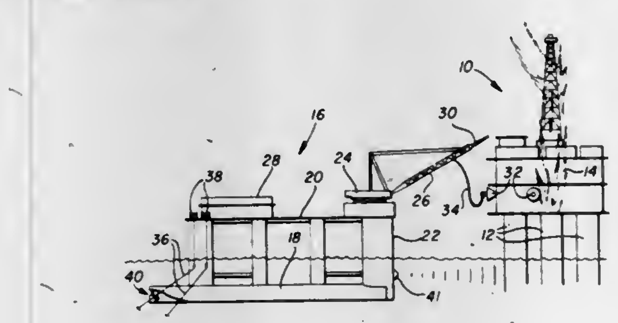

1. A fire suppression system for use in controlling fires occurring on an offshore oil platform comprising:
pipe means on said platform for distributing fire suppressing fluid to locations throughout said platform;
at least one inlet for said pipe means which is accessible from the exterior of said platform;
a service vessel;
means for maintaining said service vessel at a predetermined station adjacent said platform;
a stab connector carried by said service vessel and adapted for connection to said inlet to establish a flow path for fire suppressing fluid from said service vessel to said pipe means;
a boom mounted on said service vessel and extendable therefrom towards said platform;
maneuverable support means at the outboard end of said boom supporting said stab connector;
control means on said service vessel at a position remote from said outboard end of said boom for operating said maneuverable support means whereby said stab connector can be inserted into said inlet; and
means on said service vessel for supplying a fire suppressing fluid under pressure to said stab connector, said means including a pump.

4,372,396
METHOD AND SYSTEM FOR CONTINUOUS TURN-OVER OF SOIL

Erik A. Westlund, Aby, Sweden, assignor to Wolter Konstruktion Erik Axel Westlund, Sweden

Continuation of Ser. No. 46,091, Jun. 6, 1979, abandoned. This application Apr. 30, 1981, Ser. No. 259,091
Claims priority, application Sweden, May 2, 1979, 7900969
Int. Cl.[3] A01B *9/00, 79/00*
U.S. Cl. 172—1 8 Claims

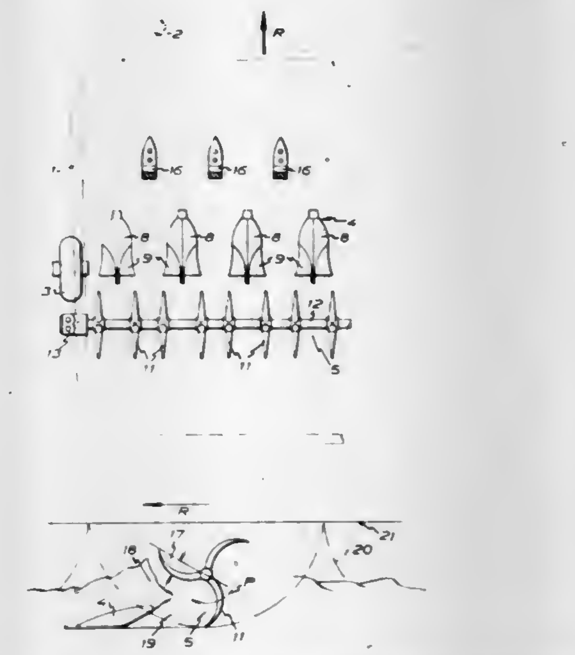

1. Device for working the soil for agricultural purposes, comprising:
a frame which is displaceably carried by wheels and is adjustable to suitable height positions;
a plurality of prong means supported on said frame at forward, laterally-spaced positions for making vertical cuts in soil, each prong means being adapted to extend downwardly from the frame into the soil and being forwardly curved;
a plurality of plough means, carried by said frame at respective positions laterally spaced between and behind said prong means in the direction of displacement of the device, for making horizontal cuts in the soil and lifting it during displacement of the frame, each of said plough means includes a pointed front part and a rearwardly divergent part entending from said front part and situated in essentially the same horizontal plane as said front part, the divergent part being adapted for making horizontal cuts in the soil at the same depth as the vertical cuts made by the prong means, each plough means also includes upwardly curved guide surfaces arranged at the rear portion of said divergent part for lifting the cut soil to form a continuous soil strip; and
a plurality of rotor means, each in the form of a number of

planar radially extending curved vanes, said rotor means being rotatably supported on a shaft situated behind the plough means for engaging the lifted soil strip from below and essentially perpendicular to the soil strip so as to cut the soil strip transversely into segments substantially without mixing it, said rotor means further turning the segments over and depositing the segments behind the rotor means, one rotor means is arranged behind each of said guide surfaces, said rotor means form rows of aligned vanes forwardly curved in the direction of rotation and rotatable in a direction which is opposite to the rolling direction of the wheels, said rotation is at a rotational speed adjustable relative to the displacement speed of the device in such a way that the end portions of the vanes describe cycloidal paths having their lowest point on a level with the lowest portions of the divergent parts.

8. A method of working soil for agricultural purposes, comprising the steps of:

making generally vertical furrows in the soil with a number of prong means arranged in side-by-side relationship on a displaceable frame;

making generally horizontal furrows by plough means provided with cutting edges, said horizontal furrows being on a level generally corresponding to the bottom of the vertical furrows and being located in the soil between the vertical furrows;

carrying and lifting the soil that has been substantially detached from the sides of the vertical furrows and detached vertically from the horizontal furrows by means of upwardly curved guide surfaces associated with the plough means, so as to form a raised continuous strip of said soil; and

lifting and transversely cutting the continuous strip of soil into segments, and turning over and depositing the soil segments back on the ground, all with the aid of a plurality of rotor means each aligned with one of said guide surfaces and rotatable about a transverse shaft located behind said surfaces, each of said rotor means being provided with curved, thin vanes whose peripheries describe cycloidal paths.

4,372,397

GARDEN TILLER WITH EXTENDED TINE SHIELD

Gerold G. Goertzen, St. Anne, and Lee R. Herscher, Kankakee, both of Ill., assignors to Roper Corporation, Kankakee, Ill.

Filed Mar. 30, 1981, Ser. No. 248,872

Int. Cl.³ B62D *51/04;* A01B *33/02*

U.S. Cl. 172—42 **12 Claims**

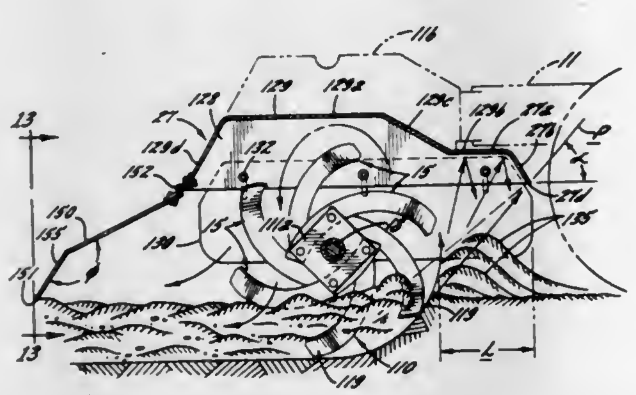

1. A walk-behind garden tiller comprising, in combination, a frame, ground-engaging drive wheels mounted adjacent one end of the frame, a tine drive shaft extending transversely to and journalled in a position adjacent to the other end of the frame, an engine mounted on said frame, a wheel drive train for coupling the engine to the drive wheels to drive the tiller in the forward direction, a rearwardly projecting handle secured to the frame for manual guidance of the tiller, a tine drive train for coupling the engine to the tine drive shaft, said tine drive shaft having a set of ground-engaging tines secured thereto, the tine drive train being so directioned that the tine shaft revolves counter to the direction of the drive wheels during tilling with the tines cutting upwardly through the untilled soil at the working face, a tine shield overlying said tines for confining flying and turbulent soil during tilling to the area about said tines, said tine shield including an extension located forwardly of said tines for blocking soil directed upwardly and forwardly by said counter-rotating tines and for defining an extended cavity in front of said tines within which a quantity of partially tilled soil can accumulate for re-working and more thorough pulverization by said tines as said machine proceeds forwardly, said tine shield extension extending forwardly of the front periphery of said tines a distance at least equal to about one-half the diameter of said tines, said tine shield extension extending downwardly to a level that is above the level of said tine drive shaft.

4,372,398

METHOD OF DETERMINING THE LOCATION OF A DEEP-WELL CASING BY MAGNETIC FIELD SENSING

Arthur F. Kuckes, Ithaca, N.Y., assignor to Cornell Research Foundation, Inc., Ithaca, N.Y.

Filed Nov. 4, 1980, Ser. No. 203,912

Int. Cl.³ E21B *7/04, 47/02;* G01V *3/08, 3/26*

U.S. Cl. 175—45 **8 Claims**

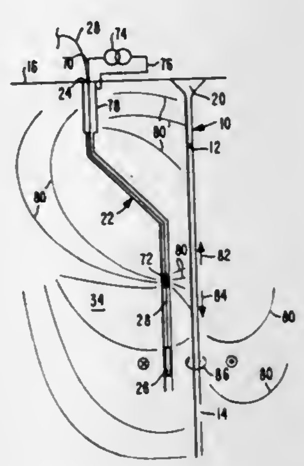

1. A method of locating a target borehole containing an electrically conductive material or object such as a casing, drill stem, or the like and for directing the drilling of a relief borehole to intersect the target borehole, comprising:

partially drilling a relief borehole at a location spaced from said target borehole;

lowering into said relief borehole at least one electrode adapted to inject current into the earth surrounding said relief borehole; connecting a source of low frequency current to said electrode, thereby producing a low frequency alternating electric current flow in the conductive material located in said target borehole, the current flow in said target borehole conductive material producing a target magnetic field;

measuring at selected depth intervals the magnitude, phase and direction of the target magnetic field produced within said relief borehole by the electric current flow in the conductive material in said target borehole;

measuring at said selected depth intervals the magnitude and direction of the earth's magnetic field;

determining from said target borehole magnetic field measurements and said earth's magnetic field measurements at each selected depth interval the compass direction and distance of said target borehole; and

further drilling said relief borehole so that it intersects said target borehole at a selected depth below the earth's surface.

4,372,399

DRILL BIT WITH WEDGE SHAPED EDUCTION JETS

Michael S. Cork, Mesquite, Tex., assignor to Development Oil Tool Systems, Garland, Tex.

Filed Mar. 11, 1982, Ser. No. 357,066

Int. Cl.³ E21B *10/60*

U.S. Cl. 175—65 **8 Claims**

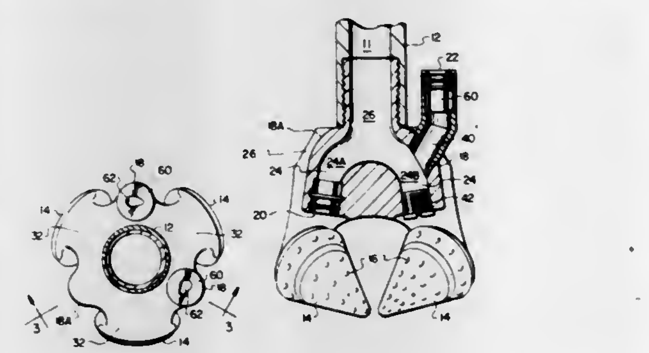

1. In combination with a drill bit for connection to a torque and mud transmitting drill string, said drill bit being of the type having a main bit body with a mud conduit therethrough connectable to receive mud transmitted through the drill string; cutting means mounted on said main bit body; and at least one flushing jet through which said mud is expellable downwardly from said main bit body; the improvement comprising:

an eduction jet through which said mud received from said drill string is expellable upwardly from said main bit body; and

a nozzle at the explusion end of said eduction jet, said nozzle defining a substantially wedge shaped aperture through which said mud is expelled, said substantially wedge shaped aperture having an orientation which is tangential to the rotation of said drill bit and in which the narrower end of the substantially wedge shaped aperture leads in the rotation of the drill bit.

4,372,400

APPARATUS FOR APPLYING PRESSURE TO FLUID SEALS

Herbert W. Beimgraben, Houston, Tex., assignor to Baker International Corporation, Orange, Calif.

Continuation of Ser. No. 23,419, Mar. 23, 1979, abandoned. This application Jun. 15, 1981, Ser. No. 273,707

Int. Cl.³ E21B *4/02*

U.S. Cl. 175—107 **11 Claims**

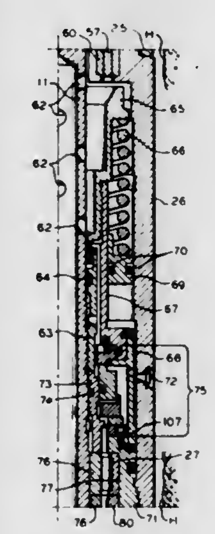

1. An apparatus for applying pressure to a fluid seal positioned between a reservoir of lubricating fluid and a stream of drilling fluid at a pressure value in a downhole drilling apparatus, comprising: a tubular spring retainer having a radially extending shoulder disposed generally at one end and circumferentially extending threads disposed generally at the other end, a tubular piston sleeve having a radially extending shoulder disposed generally at one end and circumferentially extending threads disposed generally at the other end, said spring retainer and said piston sleeve disposed in axial alignment, said threads of said spring retainer and said threads of said piston sleeve disposed in engaged relationship and said shoulder of said spring retainer and shoulder of said piston sleeve generally defining an annular cavity in fluid communication with said reservoir, an annular piston positioned in said cavity, said piston defining opposed circumferential grooves and including an axially extending collar having an outside diameter less than the diameter of said piston, an O-ring disposed in each of said circumferential grooves, and spring means disposed between said shoulder of said spring retainer and said piston for moving said piston in a direction to increase the pressure of the lubricating fluid to a value which exceeds said pressure value.

4,372,401

DRILL TOOL

Artur Fischer, Weinhalde 34, D-7244 Tumlingen/Waldachtal, Fed. Rep. of Germany

Filed Jul. 6, 1981, Ser. No. 280,514

Claims priority, application Fed. Rep. of Germany, Jul. 19, 1980, 3027408

Int. Cl.³ E21C *7/00*

U.S. Cl. 175—209 **10 Claims**

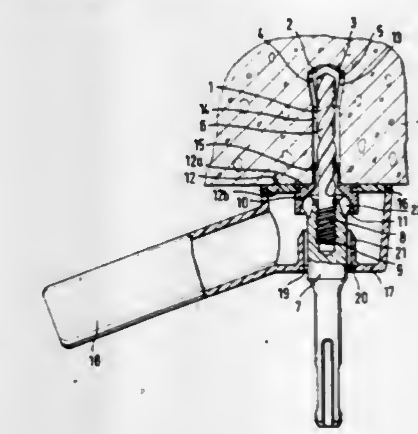

1. A tool for drilling holes with undercut enlarged portions in a support structure, comprising an enlongated drill shank having an axis of rotation, a drill bit at one end of said drill shank and having cutting edges extended radially outwardly of said drill shank; a drill collet at the other end of said drill shank, said drill collet being provided with a stop collar being of a substantially semispherical configuration; a stop plate being formed with a recess supporting said stop collar and being shaped so as to matingly complement the configuration of said stop collar thus forming therewith a swivel bearing; said drill shank being screwed into said drill collet; and a drill bell connectable to said stop plate and having a central through bore to receive said drill collet, said cutting edges being operative for forming a cylindrical hole in said support structure when the tool is axially advanced within said structure and for forming an enlarged undercut portion of the hole when a swiveling movement is imparted to the tool.

4,372,402

COMBINATION FLUID NOZZLE AND BACKFLOW VALVE

Joe Treviso, Jr., Houston, Tex., assignor to Reed Rock Bit Company, Houston, Tex.

Filed Oct. 21, 1981, Ser. No. 313,527

Int. Cl.³ E21B *10/18*

U.S. Cl. 175—318 **5 Claims**

1. A nozzle valve assembly for use in a nozzle recess in a rock drilling bit having internal, pressurized-fluid supply passages, said nozzle assembly comprising;

(a) a generally cylindrical hollow nozzle body adapted for relatively close fitting engagement in the nozzle recess of a rock drilling bit and having open axial ends;
(b) a backflow valve assembly mounted adjacent one end of said nozzle body to allow fluid to flow in only one direction through said nozzle body; and

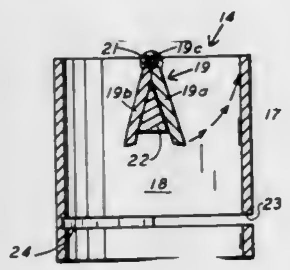

(c) a semicircular radial slot formed through the sidewall of said cylindrical nozzle body; and
(d) an orifice plate having a nozzle opening formed centrally therethrough, said plate being configured for insertion through said slot for secure retention within said body so that all of the fluid flowing through said body passes through said nozzle opening.

4,372,403
ECCENTRIC ROTARY BIT
Archie W. Beeman, 501 Hillcrest, Odessa, Tex. 79760
Filed Sep. 14, 1981, Ser. No. 301,766
Int. Cl.³ E21B *10/08*
U.S. Cl. 175—343 **6 Claims**

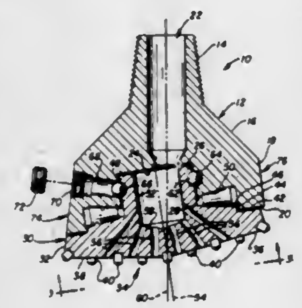

4. A rotary drill bit having a rotatable upper body member, an axial passageway formed through the upper end of the upper member, a downwardly opening chamber formed at the lower end of said upper member which downwardly opens along a centerline which is arranged at an angle respective to the centerline of the axial passageway;
a bearing race in the form of a circumferentially extending shoulder arranged perpendicular respective to the centerline of the chamber;
a non-rotatable lower bit member having a formation engaging face formed thereon for engaging a formation, said bit member includes a cylinder arranged perpendicular respective to said formation engaging face;
an upwardly opening cavity within said cylinder; a bearing race circumferentially disposed about said cylinder and arranged perpendicular to said cavity; fastener means for capturing said lower bit member to said upper member in low friction relationship therewith so that the upper member can be rotated respective to the lower bit member;
a flow passageway means extending from said axial passageway, through said cylinder, and through the face of the lower bit member through which fluid can circulate;
said cutting face is in the form of an inverted cone, said cone includes a ground engaging side and an elevated opposed side, said elevated side of the cone lies parallel to said inclined plane;
said hollow cylinder is in communication with said axial passageway and with said plurality of passageways.

4,372,404
CUTTING TEETH FOR ROLLING CUTTER DRILL BIT
Eric F. Drake, Pearland, Tex., assignor to Reed Rock Bit Company, Houston, Tex.
Filed Sep. 10, 1980, Ser. No. 185,691
Int. Cl.³ E21B *10/08, 10/46*
U.S. Cl. 175—374 **18 Claims**

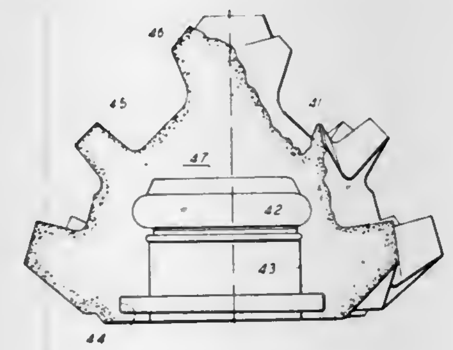

1. A cutting element for attachment to a rolling cutter which is rotatably mounted on a drill bit,
said cutting element comprising:
a root portion adapted for engagement in a bit cutter; and,
a cutting portion on said root portion adapted to protrude from a bit cutter in a cutting orientation;
wherein said cutting element comprises a portion of substantial thickness comprising a densified powder metallurgical composite of at least two varying phases, said composite having a substantially continuous mechanical property gradient through said cutting portion.

4,372,405
WEIGHT, VOLUME OR DENSITY MEASURING SYSTEM
James M. Stuart, 2074 Yellow Springs Rd., Malvern, Pa. 19355
Filed Feb. 11, 1981, Ser. No. 233,525
Int. Cl.³ G01G *19/04, 5/02, 3/14;* **G01N** *9/00*
U.S. Cl. 177—25 **17 Claims**

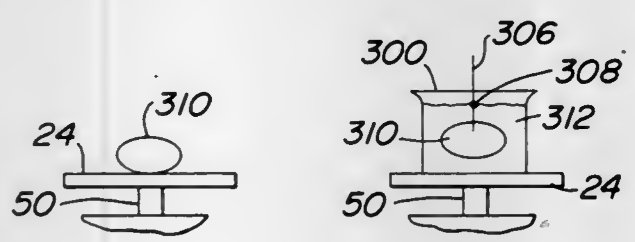

1. Scientific apparatus for automatically determining either the weight, volume or density of an unknown solid or liquid material comprising a housing including scale means having a housing including a platform for receipt of said unknown material thereon and for measuring the weight of said material, computing means, display means, variable capacitance means coupled to said platform and to said computing means and means for compensating for variations in said variable capacitance means caused by temperature variations or changes in the dielectric of said capacitance means caused by changes in the ambient atmosphere, said computing means including memory means, calculating means and control means, said memory means being coupled to the calculating means and the control means for automatically calculating the density of said material, whereupon said display means displays said calculated density.

4,372,406
ELECTRONIC BALANCE
Akira Komoto, Otsushi, and Tomohiro Tsuji, Ujishi, both of Japan, assignors to Shimadzu Corporation, Kyoto, Japan
Filed Apr. 28, 1981, Ser. No. 258,512
Claims priority, application Japan, Apr. 30, 1980, 55-58388; Jul. 15, 1980, 55-97319
Int. Cl.³ G01G *7/02*
U.S. Cl. 177—212 **9 Claims**

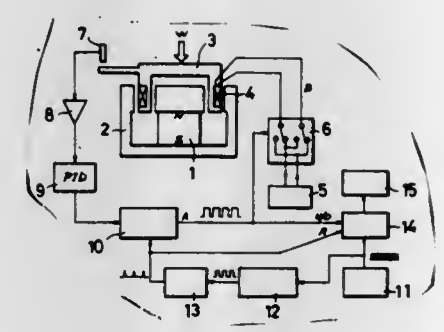

1. An electronic balance comprising:
a fixed portion including a permanent magnet and a magnetic circuit;
a movable portion displacing in response to a load applied thereto;
a coil for inducing a magnetic force defying said load;
means for supplying a current to said coil at given time intervals alternately in the positive and negative directions;
a detector for detecting any displacement of said movable portion;
a feedback controller for controlling said current supply means by the output signals from said detector, whereby the measured value is obtained by subtracting the product of the current I_2 in the negative direction and a time fraction t_2 for which the same flows from the product of the current I_1 in the positive direction and a time fraction t_1 for which the same flows, wherein the sum of said time fraction t_1 and t_2 are equal to each of said time intervals.

4,372,407
INDEPENDENT STEERING AND PROPULSION SYSTEM FOR OFF ROAD VEHICLE
Bruce J. McColl, Whitby, Canada, assignor to Owens-Illinois, Inc., Toledo, Ohio
Division of Ser. No. 934,457, Aug. 17, 1978, Pat. No. 4,237,994. This application Jun. 20, 1980, Ser. No. 161,981
Int. Cl.³ B62D *61/10;* **B60G** *19/10;* **B62D** *5/04, 9/00*
U.S. Cl. 180—6.2 **7 Claims**

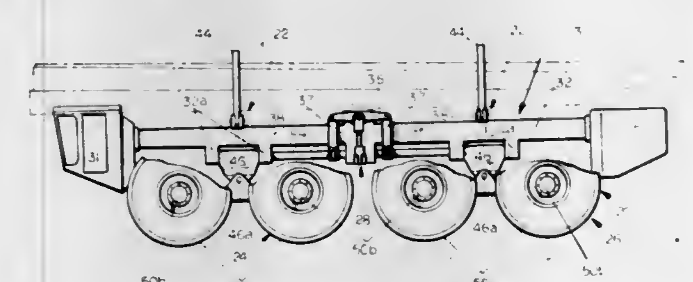

1. The method of moving a multi-wheeled roadless terrain vehicle of the type having at least two quadwheel supporting assemblages, means for driving each wheel, an individual steering means for turning each wheel about a radius on the order of three feet, and an individual brake for each wheel, under terrain conditions wherein movements of the vehicle by wheel traction is impossible, comprising the steps of:
(1) locking each wheel against rotation by application of the brake thereto;
(2) turning all wheels on one side in the same direction relative to the vehicle, and concurrently turning all wheels on the other side in the opposite direction; and
(3) releasing the brake on selected ones of said wheels and repositioning said wheels to longitudinally shift the body of the vehicle relative to the ground.

4,372,408
CLUTCH-CLUTCH-BRAKE STEERING MECHANISM FOR TRACTORS
Probir K. Chatterjea, Mt. Prospect, Ill., assignor to International Harvester Co., Chicago, Ill.
Continuation of Ser. No. 951,690, Oct. 16, 1978, abandoned. This application Aug. 11, 1980, Ser. No. 176,815
Int. Cl.³ B62D *11/008;* **B60K** *41/024*
U.S. Cl. 180—6.2 **19 Claims**

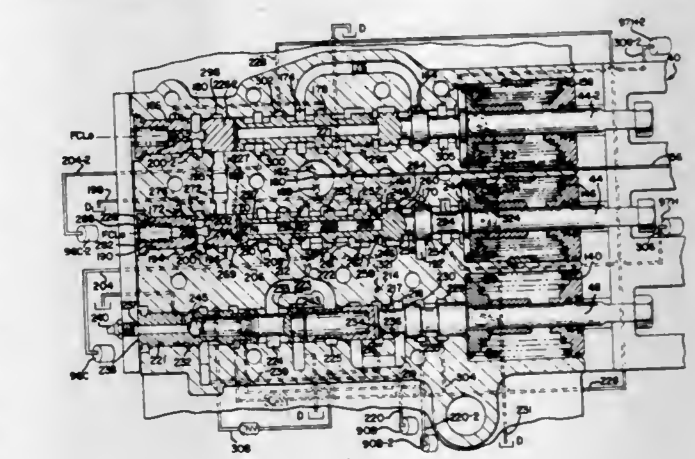

1. Transmission mechanism comprising a multi-ratio drive and braking train (**38,38-2**) having devices comprising at least one spring applied braking device and two drive devices, each drive device hydraulically disposed so as to be separately hydraulically paired with the braking device,
a modulator valve (**44-2**) for modulating the output supplied by an operating fluid pressure source of operating fluid under pressure, having restricted common pressure ports (**174, 200-2**) common to the braking device and to different ones of those drive devices each of which is separately paired with the braking device, said modulator valve operable to selectively connect said operating fluid pressure source alternately to each such common pressure port;
plural springs comprising one plurality of springs of one strength operative in the braking device (**90B-2**) for brake application and operatively overcome by the force of the operating fluid pressure for braking pressure neutralization and, thereupon, for filling the braking device and causing the springs to yield for complete brake release; and
another plurality of the springs of one strength operative in the drive devices (**96C-2, 97H-2**) for drive disengagement and operatively overcome by the force of the operating fluid pressure for filling the drive devices and causing the springs of the latter to yield for initiating drive engagement;
there being stronger springs in the spring-applied braking device (**90B-2**) than in each fluid-engaged drive device paired therewith so that filling of each of the latter (**96C-2, 97H-2**) and initiation of its engagement always precedes filling of the paired braking device through their respective port common therewith, thus inherently affording a cushioned drive engagement once initiated, due to the delay time required for fluid to flow through such common port.

4,372,409
CROSS-FLOW FAN FOR TRANSVERSE ENGINE VEHICLE
Joseph S. Mazur, Livonia, Mich., assignor to Eaton Corporation, Cleveland, Ohio
Filed Jul. 28, 1980, Ser. No. 172,882
Int. Cl.³ B60H *1/024*
U.S. Cl. 180—54 A **8 Claims**

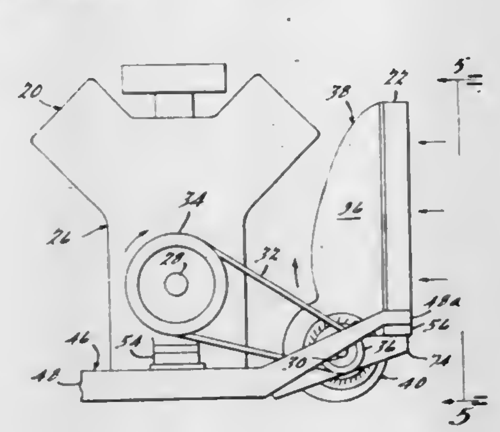

1. In a vehicle of the type including a forwardly mounted engine having a crankshaft mounted therein for rotation about an axis transverse to the longitudinal axis of the vehicle; a liquid cooling system for the engine having a radiator spaced forwardly of the engine with respect to the longitudinal axis and in a plane substantially parallel to the crankshaft axis with the air discharge side of the radiator facing the engine; a cooling fan for directing air through the radiator; means mounting the fan for rotation about an axis substantially parallel to and between the crankshaft axis and the plane of the radiator; and mechanical drive means for rotating the fan in response to rotation of the crankshaft; the improvement comprising:

a cross-flow fan defining the cooling fan, said fan having an outer circumferential extent defined by a plurality of blades circumferentially arrayed about the fan axis, said blades having a radial extent extending generally inward toward the fan axis of the fan, and said blades operative in response to rotation about the fan axis to pump the cooling air chordally across said circumferential extent in planes transverse to the axes of said fan and said crankshaft.

4,372,410
MODULAR INSTRUMENT CONSOLE
Arlin D. Loken, and Leroy Luebkemann, both of Springfield, Ill., assignors to Fiat-Allis Construction Machinery, Inc., Deerfield, Ill.
Filed Nov. 10, 1980, Ser. No. 205,787
Int. Cl.³ B62D *23/00*
U.S. Cl. 180—89.12 **11 Claims**

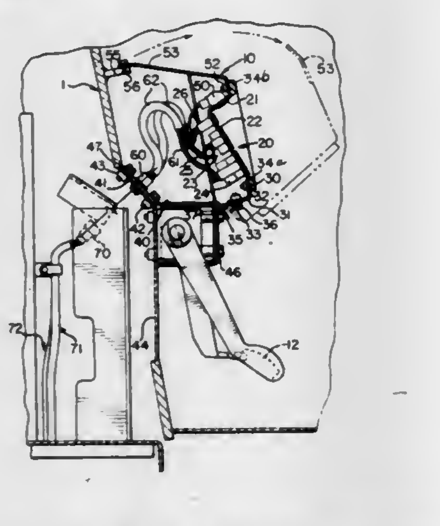

1. An instrument console for alternate mounting in combination with a vehicle comprising

panel means having a plurality of instrument means operatively coupled to respective output signals reflective of functional operation of the vehicle,

enclosure means coupled to said panel means to enclose said plurality of instrument means and permit viewing operation of said instrument means,

temporary attachment means for temporarily affixing said enclosure means to the vehicle prior to permanent installation of said enclosure means in an operator compartment of the vehicle, said instrument means being adapted to be operatively coupled to the vehicle output signals during said temporary attachment, and

permanent attachment means for permanently affixing said enclosure means within the operator's compartment after said operator's compartment has been installed on the vehicle.

4,372,411
TRUCK CAB TILT MECHANISM
Wallace C. Flower, McKean, Pa., assignor to Lord Corporation, Erie, Pa.
Filed Jun. 15, 1981, Ser. No. 274,043
Int. Cl.³ B62D *23/00*
U.S. Cl. 180—89.15 **14 Claims**

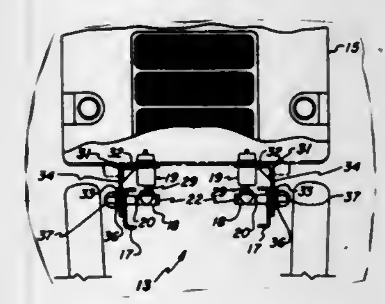

1. In a cab-over-engine truck having a cab and frame, a suspension system disposed therebetween to isolate vibration transmitted from said frame to said cab, and lift cylinder means operable to tilt said cab upwardly from said frame during a tilting operation, the improvement comprising a tilt-assist mechanism including load carrying means disposed at either side of said truck, each of said load carrying means being formed with a slot, a pair of pivot means mounted to either side of said frame and extending through said slots in respective ones of said load carrying means, and confining means mounted adjacent respective ones of said load carrying means, said confining means being operable to releasably secure said pivot means at a fixed position along said slot thus forming a fixed pivot point at each of said load carrying means, whereby upon actuation of said lift cylinder means said cab rotates about said fixed pivot points with the forces produced by the weight of said cab being reacted through said tilt assist mechanism.

4,372,412
VEHICLE INSTRUMENT PANEL ATTACHING STRUCTURE
Takayuki Fujii, Oimachi, and Hitoshi Suda, Kamifukuoka, both of Japan, assignors to Honda Giken Kogyo Kabushiki Kaisha, Tokyo, Japan
Filed Dec. 16, 1980, Ser. No. 216,939
Claims priority, application Japan, Dec. 17, 1979, 54-174452[U]
Int. Cl.³ B60K *20/08*
U.S. Cl. 180—90 **8 Claims**

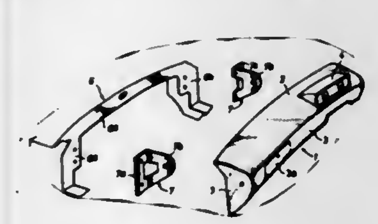

1. In a vehicle including a body frame, an instrument panel comprising:

an attaching structure which yieldably connects said instrument panel with a portion of said body frame;

said attaching structure including at least one yieldable stay disposed at each side end portion of said instrument panel, each said stay being connected between said instrument panel and said body frame portion such that a predetermined clearance is defined between said instrument panel and said body frame portion; and

each said stay being yieldably movable in substantially the transverse direction of said vehicle when said instrument panel is subjected to a substantial impact force, such that said substantial impact force is absorbed by said substantially transverse yielding movement of each said stay.

4,372,413
HYDROSTATIC STEERING DEVICE
Hans C. Petersen, Nordborg; Erik Kyster, Augustenborg; Svend E. Thomsen, Nordborg, and Carl O. Flagstad, Sonderborg, all of Denmark, assignors to Danfoss A/S, Nordborg, Denmark
Filed Nov. 5, 1980, Ser. No. 204,180
Claims priority, application Fed. Rep. of Germany, Nov. 7, 1979, 2944883; Dec. 28, 1979, 2952674
Int. Cl.³ B62D *5/08*
U.S. Cl. 180—152 **4 Claims**

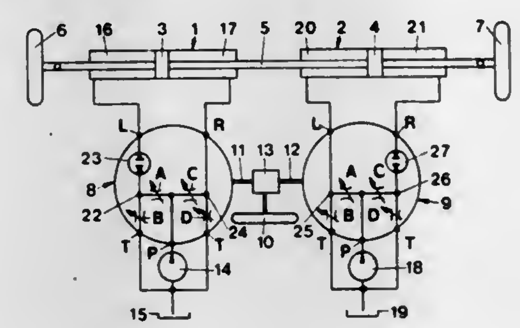

1. A hydraulic steering control system comprising a bidirectional servomotor having two operating ports on opposite sides thereof; pump and tank means; manually operable steering control means; a metering control unit having a housing, shaft means connected to said steering control means journaled in said housing, metering motor means in said housing, first and second relatively rotatable valve means connected respectively to said shaft means and said metering motor means, spring means between said first and second valve means, said housing and valve means having supply port means connected to said pump means and first and second exhaust port means connected to said tank means, said housing and valve means having first and second control port means connected to said servomotor operating ports, flow path means including first and second supply branches having fluid communication with said supply port means, said flow path means including (1) first control and exhaust branches connected to said first supply branch and respectively to said first control and exhaust port means and (2) second control and exhaust branches connected to said second supply branch and respectively to said second control and exhaust port means, said metering motor means being in one of said control branches, throttling valve means in said flow path means between said first and second relatively rotatable valve means including a first pair in said first supply and second exhaust branches and a second pair in said second supply and first exhaust branches, said first and second pairs of throttle valve means acting oppositely from partially closed neutral positions towards fully opened or fully closed positions in response to the turning of said shaft in one direction or the other.

4. A hydraulic steering control system according to claim 1 including a second bidirectional servomotor having two operating ports on opposite side thereof, said first named and said second servomotor having common shaft means, a second metering control unit the same as said first named metering control unit in the stated respects, said steering control means being connected to the corresponding said shaft means of said second metering control unit for rotation thereof in the opposite direction, said second metering control unit having its corresponding said supply port connected to said pump means and its corresponding first and second exhaust port means connected to said tank means, said second metering control unit having its corresponding first and second control port means connected to said operating ports of said second servomotor, said metering motor means of said first named metering control unit being in said first control branch thereof and the corresponding metering motor means of said second metering control unit being in the corresponding second control branch thereof so that said metering motor means always act jointly and oppositely in metering fluid supplied to and exhausted from said first named and said second servomotors.

4,372,414
FUEL-EFFICIENT ENERGY STORAGE AUTOMOTIVE DRIVE SYSTEM
David H. Anderson, Portland, and Eugene F. Lucas, Lake Oswego, both of Oreg., assignors to Advanced Energy Systems, Inc., Portland, Oreg.
Filed Sep. 4, 1980, Ser. No. 184,149
Int. Cl.³ B60K *9/000*
U.S. Cl. 180—165 **9 Claims**

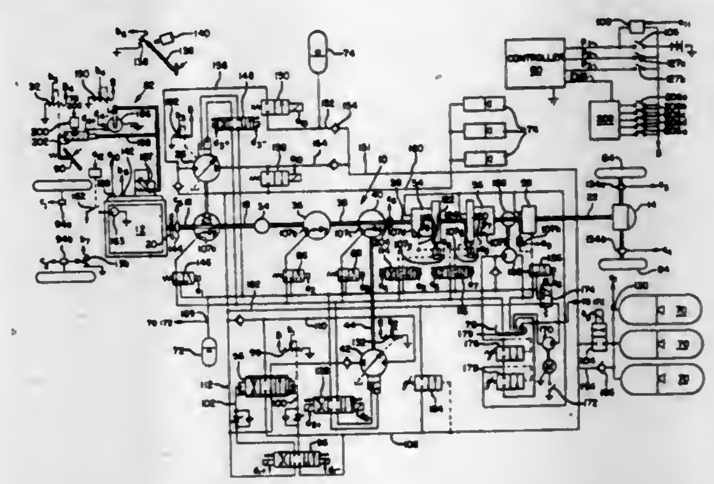

1. In a wheeled vehicle having first and second wheels and an engine, a vehicle drive system comprising:

(a) energy storage means for collecting and storing energy;

(b) power transmission means mechanically coupled to said first wheel, but not said second wheel, of said vehicle for applying torque to said first wheel but not said second wheel;

(c) transmission control means for selectively connecting said power transmission means to said energy storage means for causing said power transmission means to transfer energy between said storage means and said first wheel;

(d) said power transmission means comprising variable torque application means for controllably applying varying amounts of torque to said first wheel while transferring energy between said storage means and said first wheel;

(e) wheel speed sensor means for sensing and comparing the respective rotational speeds of said first and second wheels; and

(f) means connected to said variable torque application means and to said wheel speed sensor means for causing said torque application means to reduce the amount of torque applied to said first wheel automatically in response to a difference between the rotational speeds of said first and second wheels of at least a predetermined minimum magnitude.

4,372,415
VEHICLE DRIVE UNIT
Masaki Watanabe, Urawa, and Goroei Wakatsuki, Fujimi, both of Japan, assignors to Honda Giken Kogyo Kabushiki Kaisha, Tokyo, Japan
Filed Apr. 7, 1980, Ser. No. 137,603
Claims priority, application Japan, Apr. 10, 1979, 54-43552; Apr. 20, 1979, 54-52999[U]
Int. Cl.[3] B60K *5/04*
U.S. Cl. 180—215 **9 Claims**

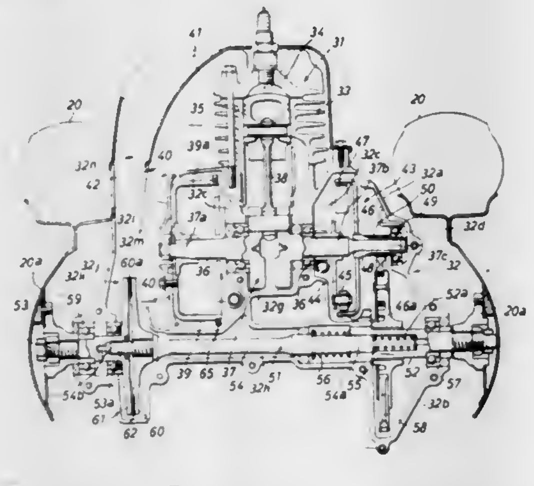

1. A drive unit for a vehicle having two spaced apart drive wheels, comprising:
an engine having a crankshaft operably connected therewith, said crankshaft having at least one end extending on one side of said engine, said end of said crankshaft being operably connected with a transmission mechanism;
an axle having said drive wheels respectively supported on the ends thereof, said axle including an intermediate member and first and second drive members mounted respectively on ends of said intermediate member in alignment therewith;
a final output gear operably connected with said transmission mechanism and mounted on said first drive member of said axle so as to rotate said first drive member by power of said engine supplied through said crankshaft and said transmission mechanism;
said intermediate member of said axle being connected with said first drive member so as to rotate together therewith;
power transmitting means mounted on said second drive member, said power transmitting means including coupling means for coupling said second drive member with said intermediate member so as to rotate said second drive member upon rotation of said intermediate member; and
said engine being disposed between said final output gear and said power transmitting means.

4,372,416
TRICYCLE VEHICLE
Nihaku Igarashi, Shizuoka, Japan, assignor to Yamaha Hatsudoki Kabushiki Kaisha, Iwata, Japan
Filed Sep. 5, 1980, Ser. No. 184,652
Claims priority, application Japan, Sep. 14, 1979, 54-118087
Int. Cl.[3] B62J *25/00*
U.S. Cl. 180—215 **1 Claim**

1. In a tricycle vehicle of the type which has a body, a forward wheel mounted to a steering post, two rear wheels, an engine forwardly of the axis of said rear wheels drivingly engaged to said rear wheels, a foot rest projecting from each side of the body, and a seat for the driver, the improvement comprising extending said seat substantially forward of said foot rests, and locating the crankcase of said engine rearwardly of said foot rest, said seat having a seat surface extending for a substantial distance along and upon which the driver can stably rest at a plurality of locations, with his feet on the foot rests, in a posture resembling the rider of a horse, without impediment by the steering post, there being a sufficient vertical spacing

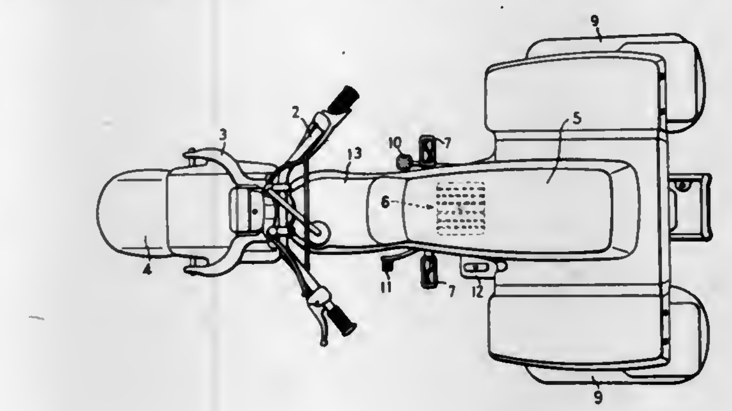

between the seat and the footrests to accommodate for such a posture.

4,372,417
DRIVE UNIT MOUNTING STRUCTURE
Hitoshi Yamamoto, Shiki; Masaki Watanabe, Urawa, and Nobuhiro Shido, Shiki, all of Japan, assignors to Honda Giken Kogyo Kabushiki Kaisha, Tokyo, Japan
Filed Oct. 20, 1980, Ser. No. 198,350
Claims priority, application Japan, Oct. 22, 1979, 54-136224
Int. Cl.[3] B62K *5/04*
U.S. Cl. 180—215 **7 Claims**

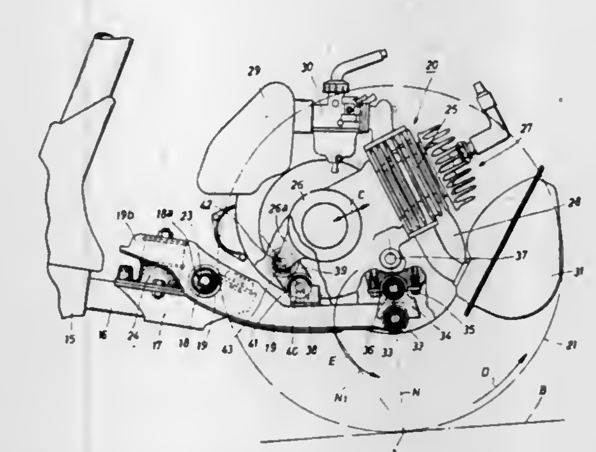

1. A drive unit mounting structure, comprising:
a body of a vehicle;
a rear fork pivotably connected at one end thereof to said body;
a drive unit pivotably mounted at a rear portion thereof on the other end of said rear fork;
a rear wheel drivably coupled to said drive unit; and
first link means having one end pivotably connected to a front portion of said drive unit and the other end pivotably connected to said rear fork, one of said pivotably connected ends of said first link means being disposed forwardly and upwardly of the other of said pivotably connected ends in the normal state of equilibrium of said mounting structure, such that said link means has a longitudinal axis directed obliquely, when viewed in side elevation, toward a point where said rear wheel contacts the ground.

4,372,418
FRONT SET OF WHEELS FOR AN AUTOMOBILE VEHICLE
Henry L. A. Dangel, 7 Rue du Sillon, 68100 Mulhouse, France, assignor to Henry Leon Albert Dangel, Mulhouse, France
Filed Sep. 8, 1980, Ser. No. 185,099
Claims priority, application France, Sep. 13, 1979, 79 22854
Int. Cl.[3] B60K *17/30*
U.S. Cl. 180—256 **10 Claims**

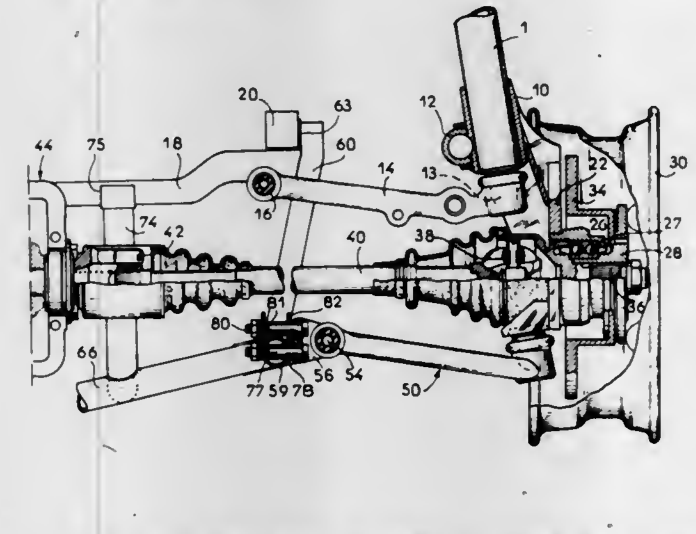

1. A front set of vehicle wheels comprising in combination, for each wheel of the set, a wheel hub support, an upper suspension arm, a suspension arm located below the upper arm and shorter than the upper arm, a telescopic shock absorber-suspension spring assembly having an axis of telescopic operation and fixed to the hub support at a lower end of the shock absorber-suspension spring assembly, means for connecting an upper end of the shock absorber-suspension spring assembly to the vehicle, a ball joint articulation connecting the telescopic shock absorber-suspension spring assembly to the upper suspension arm, and a second ball joint articulation connecting the hub support to the lower suspension arm, the two ball joint articulations having centres which are in fixed alignment on said axis of the shock absorber-suspension spring assembly and pivotal means provided adjacent to ends of the suspension arms opposed to said ball joint articulations for pivotally mounting the arms on the vehicle, said pivotal means of at least one of the arms being sufficiently elastically yieldable in operation of the arms for accommodating the fact that one of said ball joint articulations does not travel on an arc of a circle.

4,372,419
VEHICULAR ANTI-THEFT LOCKING SYSTEM
Lawrence Barnett, 75-34 168 St., Flushing, N.Y. 11366; Julio Cordoba, 21 Crosby Ave., Brooklyn, N.Y. 11207, and Benjamin Nuzzo, 142 Fountain Ave., Selden, N.Y. 11784
Filed Feb. 19, 1980, Ser. No. 122,028
Int. Cl.[3] B60R *25/00*
U.S. Cl. 180—289 **2 Claims**

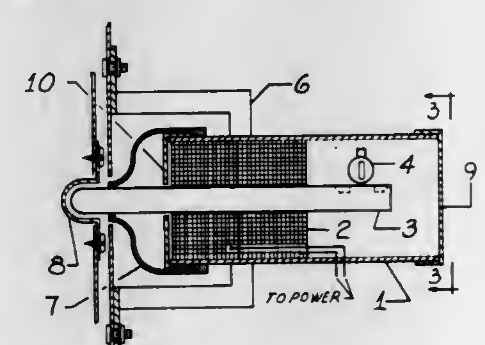

1. A notched locking bolt within a casing cylinder mounted in a vehicle door and a manual disengaging apparatus, said locking bolt passing through a dual polarity electromagnetic coil, through a front casing cap and insulated bushing, through a hole in said vehicle door side wall, and into a receptacle that covers a hole in a door post of said vehicle;
said casing cylinder having removable front and rear casing caps;
said insulated bushing, which is attached to the outside of said casing cylinder and said front casing cap, prevents the free movement of said locking bolt;
said manual disengaging apparatus, accessible from the passenger compartment of said vehicle by means of a gear shaft that is axially attached to a one tooth gear inside said casing cylinder;
said one tooth gear engages with the notches in said locking bolt;
said gear shaft is held in place by and protrudes through a retainer, and a bushing that is securely attached to the outside of said casing cylinder, and through a door panel grommet before engagement with a key;
said key, when turned, will cause said gear shaft to turn said one tooth gear into said notched locking bolt, causing disengagement of said locking bolt from said receptacle;
turning said one tooth gear in opposite direction will cause engagement of said locking bolt into said receptacle;
said retainer is free to rotate inside said bushing;
locking washers prevent said retainer, said gear shaft, and said bushing from moving laterally within said casing cylinder.

4,372,420
SEISMIC EXPLORATION SYSTEM
Arlton H. White, Dallas, Tex., assignor to Texas Instruments Incorporated, Dallas, Tex.
Continuation of Ser. No. 731,400, Oct. 12, 1976, Pat. No. 4,139,074. This application Feb. 2, 1979, Ser. No. 8,902
The portion of the term of this patent subsequent to Feb. 13, 1996, has been disclaimed.
Int. Cl.[3] G01V *1/38*
U.S. Cl. 181—120 **4 Claims**

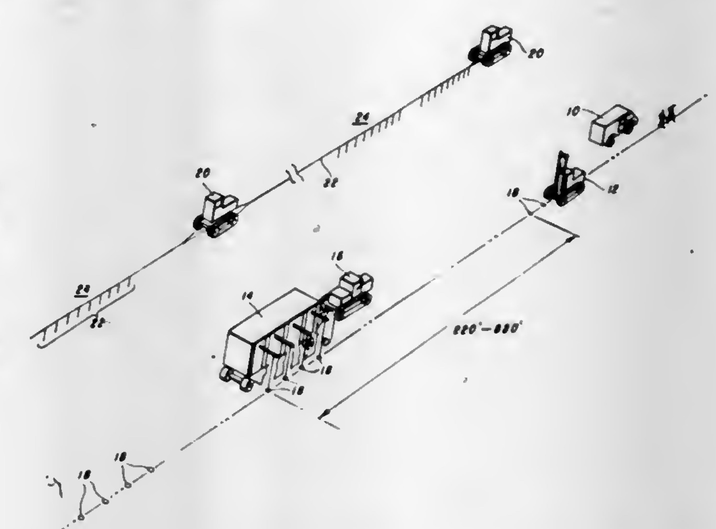

1. A method of marine seismic exploration in water beneath an ice layer comprising the steps of:
(a) forming an aperture extending through said ice layer,
(b) lowering at least one acoustic source through said aperture into the water,
(c) activating said acoustic source at least once while immersed in said water,
(d) withdrawing said acoustic source from said aperture, and
(e) activating said acoustic source subsequent to withdrawal from the water and prior to lowering through a second aperture.

4,372,421
VEHICLE EXHAUST SYSTEM
Otis Jackson, 13284 Caldwell, Detroit, Mich. 48212
Continuation-in-part of Ser. No. 597,082, Jul. 18, 1975, abandoned. This application Jul. 19, 1979, Ser. No. 58,860
Int. Cl.³ F01N *1/24, 7/18*
U.S. Cl. 181—243 **2 Claims**

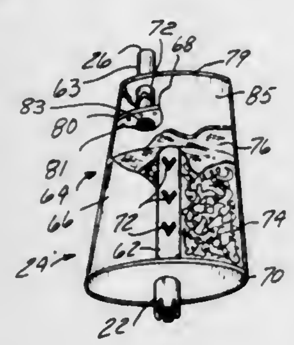

1. A muffler for a vehicle exhaust system comprising:
a housing having an inlet and outlet and first, second and third interior portions formed therein;
an inlet conduit disposed in said inlet of said housing, said inlet conduit extending a distance into said first portion of said housing, said inlet conduit having a plurality of baffles along its extent thereof defining a fluid flow path through said inlet conduit into said first portion of said housing;
a mass of sound deadening material disposed in said first portion of said housing surrounding said inlet conduit;
a layer of wire mesh surrounding said mass of sound deadening material;
a mass of wire mesh disposed adjacent to said mass of sound deadening material in said second portion of said housing and substantially filling said second portion of said housing;
a layer of sound deadening material disposed within said housing and surrounding said second and third portions;
partition means disposed between the second and third portions of the housing, said partition means having a first aperture and a plurality of second apertures disposing said third portion of said housing in fluid flow communication with said second portion of said housing;
an outlet conduit extending a distance into said third portion of said housing adjacent to said second portion therein and received in said first aperture in said partition means to define a fluid flow path between said second portion of said housing and said outlet conduit, said outlet conduit having a baffle therein defining a fluid flow path between said third portion of said housing and said outlet conduit; and wherein
one end of said housing is detachably secured thereto and further wherein the mass of sound deadening material and the mass of wire mesh are removable from the interior of said housing.

4,372,422
ESCAPE DEVICE
Thurman V. Sharp, 1813 Sanford Apt. 2, Little Rock, Ark. 72202
Filed Dec. 29, 1980, Ser. No. 220,966
Int. Cl.³ A62B *1/16, 35/00*
U.S. Cl. 182—5 **20 Claims**

1. A device suitable for use in lowering a load comprising a frame, a roller rotatably mounted on said frame, said roller having a groove positioned around said roller, the surface of said roller adjacent a side of said groove being inclined inwardly toward said groove, a flexible line forming a loop around said roller within said groove, said line extending in generally opposite directions from said roller, said groove having a width confining said line such that said line frictionally contacts itself at the entrance and exit portions of the loop in said groove, said frame and roller being movable along said line by application of a load on said frame, and the movement

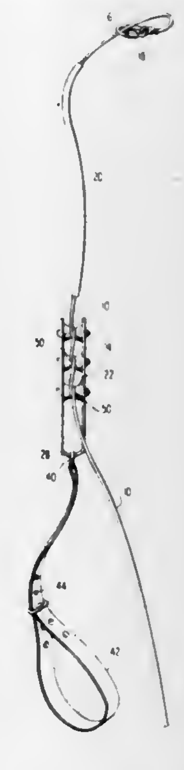

of said frame and roller being controllable by application of a force on said line.

4,372,423
ESCAPE CHUTE
Ronald L. Pelley, 760 E. Telegraph Rd., Box 385, Fillmore, Calif. 93015
Filed Jan. 5, 1981, Ser. No. 222,306
Int. Cl.³ B64D *17/00;* **A62B** *1/20*
U.S. Cl. 182—42 **5 Claims**

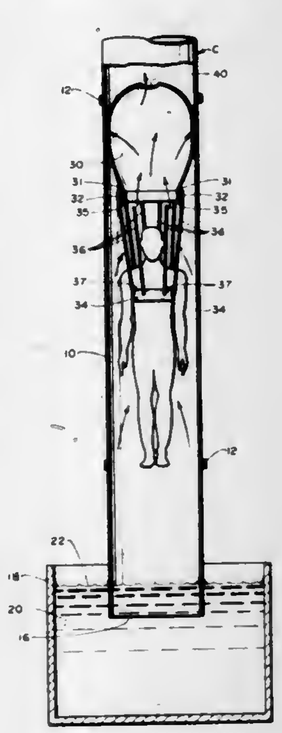

1. An apparatus for descending an object from an elevated location comprising:
an elongated tube;
a means of restricting the air flow through the lower tube exit; and
a descending device within said tube connected to said descending object, said device restricting the relative upward air flow passed said device during the descent, whereby a buildup of pressure occurs below said descending device during the descent.

4,372,424
SAFETY DEVICE FOR SCAFFOLDINGS
Ruth Langer, Ochsenbacher Strasse, 7129 Güglingen-Eibensbach, (Württemberg), Fed. Rep. of Germany
Filed May 22, 1981, Ser. No. 266,344
Claims priority, application Fed. Rep. of Germany, May 29, 1980, 3020389
Int. Cl.³ E04G *5/08, 7/28*
U.S. Cl. 182—119 **5 Claims**

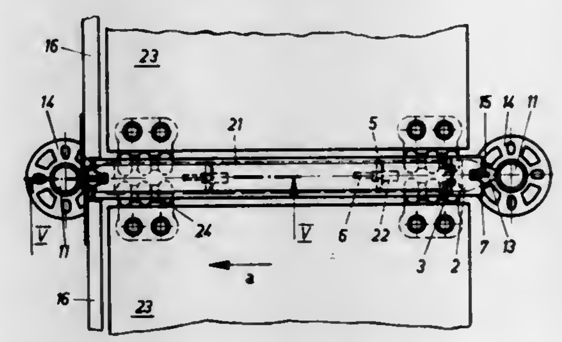

1. A device for protecting against lifting gangplanks of a scaffolding assembled of vertical supports, trough-shaped crossbars secured to the supports, and claw hooks for mounting the gangplanks to the crossbars, said device comprising oblong holes formed in bottom portions of respective crossbars and being oriented in the longitudinal direction of the crossbars; a rail arranged above each crossbar and overlapping the claw hooks; at least one mounting projection fixed to each rail and having a hook-shaped end portion insertable into corresponding oblong hole and engageable with the crossbar; and a locking plate hinged to an end of the rail.

4,372,425
AUXILIARY SCAFFOLDING ATTACHMENT
Michael Murphy, 234 Prospect Ave., Clifton Heights, Pa. 19018
Filed Jan. 12, 1981, Ser. No. 224,398
Int. Cl.³ E04G *1/15, 1/20*
U.S. Cl. 182—179 **12 Claims**

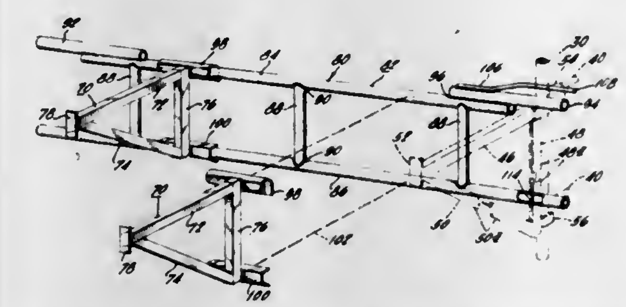

1. An auxiliary attachment for a scaffolding assembly alongside a vertical structure, said scaffolding assembly including outwardly extended brackets adapted for mounting and supporting a horizontal worker support platform, said auxiliary attachment being adjustably connected to said scaffold assembly, a portion of said auxiliary attachment extending outwardly beyond said scaffolding assembly in spaced relationship intermediate said spaced brackets, said auxiliary attachment including a detachable support and an auxiliary plank support bracket attached thereto and adapted to underlie and support an otherwise unsupported portion of a said worker support platform at a position spaced from a said extended scaffold worker support bracket.

4,372,426
MAST STRUCTURE
Reynold F. Gamundi, Bountiful, Utah, assignor to Eaton Corporation, Cleveland, Ohio
Continuation of Ser. No. 106,077, Dec. 20, 1979, abandoned. This application Feb. 22, 1982, Ser. No. 350,703
Int. Cl.³ B66B *9/00*
U.S. Cl. 187—1 R **6 Claims**

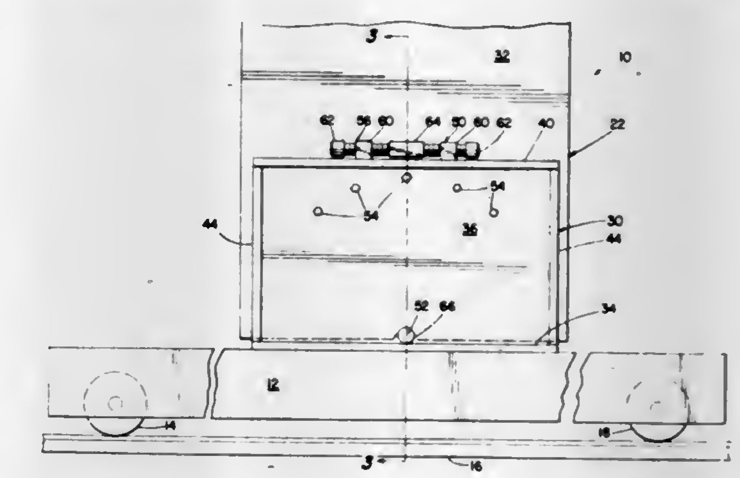

1. In a storage/retrieval machine comprising a frame and a mast assembly attached to said frame and extending vertically therefrom; the improvement wherein said mast assembly comprises an upstanding support structure attached to said frame, said support structure including first and second spaced walls upstanding from said frame, and pivot pin means received in a lower portion of said first and second walls; a mast including at least one plate member received between said first and second walls in face-to-face contact therewith and having an essentially V-shaped notch formed in the lower edge thereof engageable with said pivot pin means; clamp means acting on at least one of said first and second walls of an upper portion thereof and on said at least one plate member to apply a clamping force therebetween, said clamp means comprising at least one threaded fastener received through a clearance hole formed in said wall and threaded into said plate member with a head formed on said fastener in engagement with said wall; and adjustable means acting between at least one of said first or second walls and said at least one plate member for pivotally moving said mast about said pivot pin means against said clamping force.

4,372,427
INDUSTRIAL EMERGENCY BRAKE
Leonce Rogier, Saint-Denis, France, assignor to VALEO, Paris, France
Filed Sep. 19, 1980, Ser. No. 188,917
Claims priority, application France, Sep. 21, 1979, 79 23508
Int. Cl.³ F16D *55/08, 59/00;* **B60T** *7/12*
U.S. Cl. 188—72.1 **6 Claims**

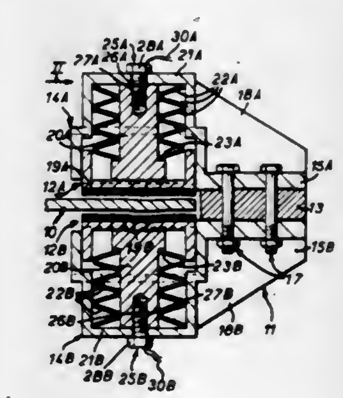

1. In an industrial emergency brake comprising a fixed support, at least one braking member adapted to be applied against

a brake member, means constantly engaging and urging said braking member towards said brake member and releasable retaining means supporting said braking member against movement by said first-mentioned means and normally maintaining it out of engagement with the brake member, the improvement wherein said releasable retaining means comprises a frangible explosive component containing an explosive charge and adapted to be fractured upon detonation whereupon said first-mentioned means moves said braking member into engagement with the brake member.

4,372,428
DISC BRAKE HAVING SLIDING CALIPER
Jean Delaunay, Drancy, and Claude Le Marchand, Domont, both of France, assignors to Societe Anonyme D.B.A., Paris, France
Filed Oct. 27, 1980, Ser. No. 200,679
Claims priority, application France, Nov. 8, 1979, 79 27568
Int. Cl.³ F16D *65/18*
U.S. Cl. 188—73.35 **1 Claim**

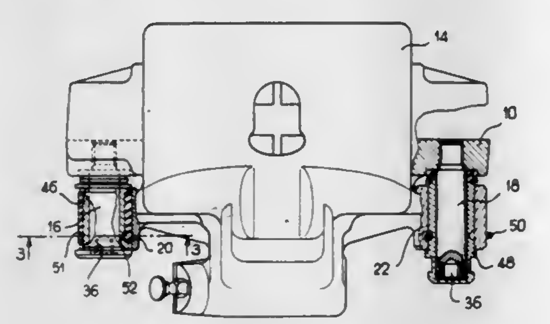

1. A disc brake with a caliper, means including a pair of axial columns for mounting said caliper on a fixed support in which two friction elements are anchored, said friction elements being capable of coming into frictional engagement with the opposite faces of a rotating disc on operation of actuating means consisting of a brake motor acting directly on one of the friction elements and acting on the other friction element by reaction through the sliding caliper, said columns passing through bores provided in the fixed support and through openings in the caliper, said openings provided in the caliper being provided with notches and the walls of said caliper openings having substantially the form of a C in cross section in such a manner that said columns can be introduced into the openings by being presented transversely in relation to their longitudinal axes, said pair of columns defining a front column and a rear column, the notch in the opening in which the rear column is engaged being directed in the direction of the plane containing the longitudinal axes of the two columns and extending away from the front column, a sleeve assembly being mounted relative to said rear column to cooperate with the corresponding opening formed in the caliper, characterized in that said sleeve assembly is provided at its periphery with a radial projection made of a resilient material and extending radially outwardly from said periphery to cooperate with a central portion of the wall formed by the caliper opening which receives said rear column, said radial projection being compressed between said periphery and said caliper opening wall in a predetermined position in order to take up the play and the manufacturing tolerances and to avoid pivoting of the caliper relative to said pair of columns as well as the noises due to the vibrations of the whole of the brake during its use, said sleeve assembly being provided with at least one bead spaced circumferentially from said projection, said projection and said bead being integral with the sleeve assembly and extending axially of the peripheral of the sleeve assembly, said bead enabling any relative rotation of said sleeve assembly in relation to said bore to be avoided so as to maintain said projection in the predetermined position in relation to said caliper opening.

4,372,429
PNEUMATIC SPRING WITH PROTECTIVE BOOT
Thomas O. Marx, Rockton, Ill., assignor to Atwood Vacuum Machine Co., Rockford, Ill.
Filed Apr. 7, 1980, Ser. No. 137,747
Int. Cl.³ F16F *9/38*
U.S. Cl. 188—322.12 **6 Claims**

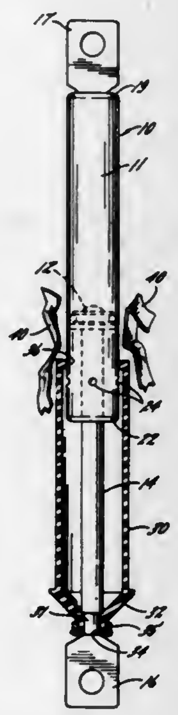

1. A gas spring assembly for initial use in adverse environmental conditions and subsequent use in less adverse environmental conditions comprising a fluid containing cylinder having a closure at one end thereof, a plunger rod slidably supported in the other end of said cylinder and having a piston at the end thereof within said cylinder, said piston and plunger rod being movable relative to said cylinder from a retracted position in which said rod is received within said cylinder a maximum amount to an extended position in which said plunger rod extends outwardly of said cylinder a maximum amount, an elongated boot made of elastomeric material secured to and surrounding the portion of said plunger rod extending outwardly from said cylinder and being movable in unison with said plunger rod for protectively containing the extended plunger portion in both extended and retracted positions, said boot having one end in sliding engagement with the outer surface of said cylinder, a temporary relatively thin walled protective sheath tightly surrounding said boot and a portion of said cylinder, said sheath being movable with said boot and rod relative to said cylinder while firmly holding said one boot end in relatively tight sliding contact with said cylinder thereby effectively preventing contaminants from passing between said sliding boot end and said cylinder during initial use of said assembly, and said temporary sheath being made of a frangible material which is destructible and readily removable from said boot upon exposure to a predetermined temperature which is unharmful to the material of said boot thereby leaving said boot as a permanent protector of the extendible plunger rod during subsequent use of said assembly.

4,372,430
DRUM BRAKE AND RETAINING SPRING
Dennis A. Borugian, Farmington Hills, Mich., assignor to Eaton Corporation, Cleveland, Ohio
Continuation of Ser. No. 124,487, Feb. 25, 1980, abandoned. This application Nov. 4, 1981, Ser. No. 318,227
Int. Cl.³ F16D *51/22*
U.S. Cl. 188—329 **4 Claims**

1. An improved drum brake of the type comprising a rotatably mounted drum, a fixed support, a single anchor pin fixed to the support, a pair of arcuate brake shoes each including at least one web and a friction lining, both of said brake shoes

pivotably supported at one end of the webs thereof on said anchor pin, said webs defined by first and second substantially parallel surfaces extending generally perpendicular to the axis of said anchor pin, said first surfaces defining the top of said webs and said second surfaces defining the bottoms of said webs, said anchor pin extending upwardly beyond the first surfaces of said webs by a first axial distance, a brake shoe coil tension retaining spring having one end thereof attached to one of said shoes and the other end thereof attached to the other of said shoes for retaining said shoes pivotably on said anchor pin and an actuating member for selectively radially outwardly pivoting said shoes about said anchor pin, the improvement comprising:

said retention spring being of a one-piece construction comprising an axially extending centrally located coil portion and an attachment portion extending axially outwardly from each of the opposite ends of said coil portion, each attachment portion defined by a first section extending

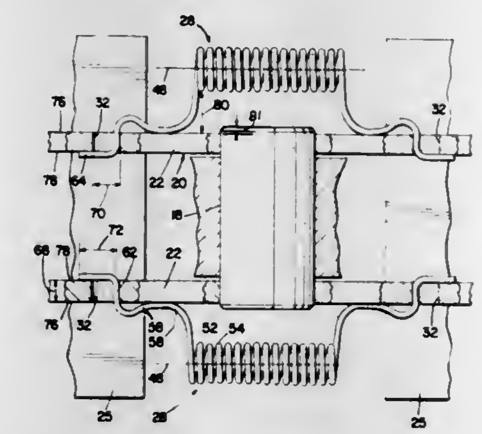

generally downwardly from the bottom of the coil portion, a second section extending upwardly and axially outwardly from the bottom of the first section and terminating at a point below the bottom of the coil portion, a third section extending downwardly from said second section to a point below the bottom of the junction of said first and second sections and a fourth section extending generally axially outwardly from the bottom end of said third section, each of said webs provided with an aperture, each of said fourth sections having an axial length exceeding the diameter of said apertures, a line connecting the axis of said apertures passing through said anchor pin when said shoes pivotably retained on said anchor pin, said spring being inserted into said apertures from the first surfaces of said webs such that said fourth sections engage said second surfaces, the junctions of said first and second sections engaging said first surface and said coil portion elevated above said first surfaces by a distance greater than said first axial distance.

4,372,431
SIX AXIS VIBRATION ISOLATION SYSTEM
Rene A. Desjardins, Media, Pa., assignor to The Boeing Company, Philadelphia, Pa.
Filed Nov. 5, 1979, Ser. No. 91,437
Int. Cl.³ F16F *7/10*
U.S. Cl. 188—380 **37 Claims**

34. A vibration isolation system for isolating a body from linear vibratory forces acting along three mutually orthogonal axes, and rotational vibratory forces acting about said three mutually orthogonal axes, said vibratory forces being generated by a vibrating mass coupled to said body, wherein the vibration isolation system comprises:

two elongated collinear vibration isolators disposed such that:

(i) they extend in opposite directions relative to the center of the three mutually orthogonal axes; and

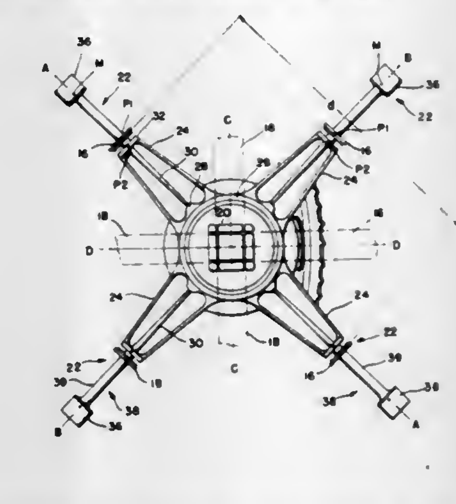

(ii) the collinear axis intersects the center of the three mutually orthogonal axes.

4,372,432
BI-DIRECTIONAL CLUTCH
Martin Waine, Riverside, and Jules Nisenson, Stamford, both of Conn., assignors to General Clutch Corp., New York, N.Y.
Filed Mar. 18, 1981, Ser. No. 244,975
Int. Cl.³ F16D *67/00;* **B60T** *7/12*
U.S. Cl. 192—8 C **13 Claims**

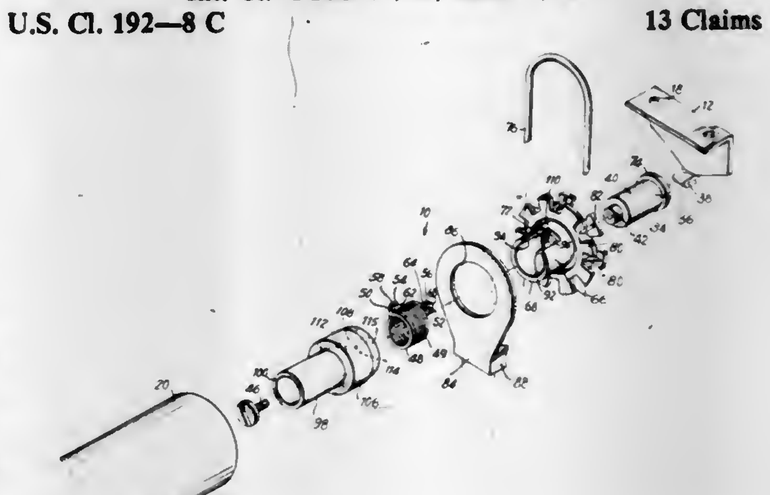

1. A bi-directional clutch comprising a core member having a cylindrical surface; an unwrap spring having helical turns, said helical turns being located about the cylindrical surface of the core member and normally gripping the cylindrical surface of the core member to prevent rotation of the spring relative to the core member; said unwrap spring further including a first spring tang and a second spring tang, said spring tangs extending outwardly past the circumference of the helical turns and being responsive to a force applied to the first spring tang in a first direction to cause the helical turns to tighten about the core member and to a force applied to the frst spring tang in a second direction to cause the helical turns to loosen about the core member enabling the spring to rotate relative to the core member, and being further responsive to a force applied to the second spring tang in said first direction to cause the helical turns to loosen about the core member enabling the spring to rotate relative to the core member and to a force applied to the second spring tang in said second direction to cause the helical turns to tighten about the core member; a driving member disposed for rotation about the core member, said driving member having two tang-receiving surfaces, one of said tang-receiving surfaces being located such that rotation of the driving member relative to the core member in said second direction causes said one tang-receiving surface to apply a force to said first spring tang in said second direction to loosen said helical turns, the other of said tang-receiving surfaces being located such that rotation of the driving member relative to the

core member in said first direction causes said other tang-receiving surface to apply a force to said second spring tang in said first direction to loosen the helical turns; and a driven member disposed for rotation with said spring, said driven member having two tang-abutting surfaces, one of said tang-abutting surfaces being located such that direct rotation of the driven member in said first direction causes the tang-abutting surface to apply a force to the first tang in said first direction to tighten the helical turns and prevent further rotation of the driven member and spring relative to the core member, the other of said tang-abutting surfaces being located such that direct rotation of the driven member in said second direction causes the tang-abutting surface to apply a force to the second tang in said second direction to tighten the helical turns and prevent further rotation of the driven member and spring relative to the core member, said tang-abutting surfaces being further operative to transfer driving member-controlled rotation of the spring relative to the core member to the driven member.

4,372,433

COMBINATION CLUTCH/BRAKE MECHANISM

Robert K. Mitchell, and Robert K. Catterson, both of Brookfield, Wis., assignors to Briggs & Stratton Corporation, Wauwatosa, Wis.

Filed Apr. 14, 1980, Ser. No. 139,880

Int. Cl.³ F16D *67/02;* **A01D** *69/08*

U.S. Cl. 192—18 R **2 Claims**

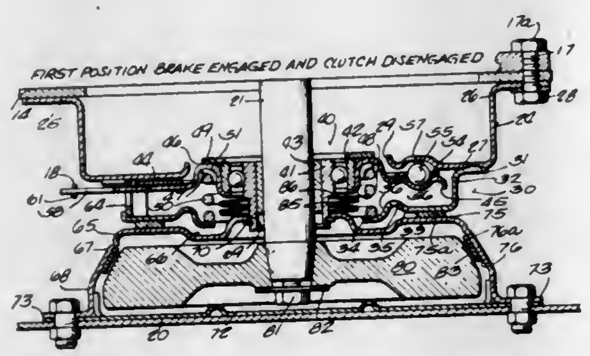

1. A combination clutch/brake mechanism for selectively effecting a torque transmitting connection between coaxial driving and driven means for preventing rotation of the driving element without interfering with continued rotation of the driving element comprising:

a drive shaft

a driving disc connected to the shaft and having a clutch surface,

a bearing assembly mounted for axial movement on said shaft and having a first rotatable portion and a second portion,

a carrier connected to the rotatable portion of said bearing assembly and carrying an element to be driven, said carrier having spaced apart first and second surfaces, said first surface being cooperable with said clutch surface of said disc to effect transmission of torque from the disc to the driven element,

a stationary brake member having a brake surface cooperable with the second surface of the carrier to hold said carrier against rotation,

resilient means interconnecting said bearing assembly and said stationary brake member for urging said bearing assembly axially of said shaft in one direction to thereby effect engagement of said second surface of the carrier with said brake surface,

operating means operably connected to the second portion of said bearing assembly for moving said bearing assembly axially of said shaft in the opposite direction to thereby effect engagement of the first surface of said carrier with said clutch surface and transmit torque from said disc to said carrier, and

second resilient means interconnecting said bearing assembly and said carrier, said second resilient means being arranged so that continued movement of said bearing assembly in said opposite direction after engagement of the first surface of said carrier with said clutch surface will compress said second resilient means to permit overtravel of said operating means beyond that needed to obtain clutch engagement.

4,372,434

INTERLEAVED FRICTION PLATE CLUTCH HAVING MEANS TO PREVENT PLATE WOBBLE

George R. Aschauer, Racine, Wis., assignor to Twin Disc, Incorporated, Racine, Wis.

Filed Jan. 28, 1981, Ser. No. 229,097

Int. Cl.³ F16D *25/063, 17/72*

U.S. Cl. 192—85 AA **24 Claims**

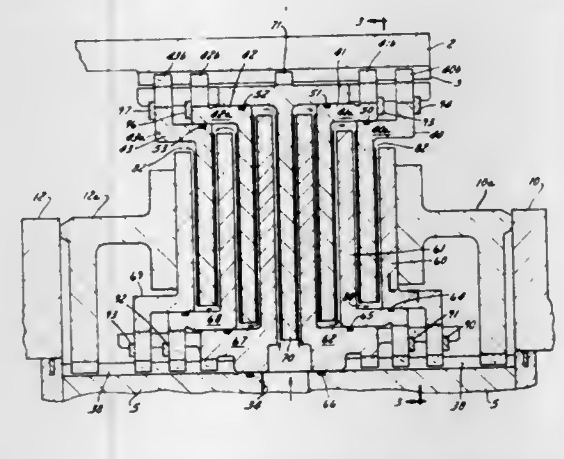

1. A multiple, interleaved friction plate clutch comprising, a driving member, a driven member and a clutch pack between said driving and driven members, said pack comprising a plurality of externally toothed clutch plates having an axially slideable connection relative to one of said members for driving engagement therewith, said pack also including a plurality of internally toothed clutch plates which are interleaved with said externally toothed clutch plates and which have an axially slideable connection relative to the other of said members, means for clamping said interleaved plates together to provide a releasable driving connection between said members, whereby said plates may be shifted between a clutch clamp-up position and a clutch released position in which said plates are separated from one another and have relative rotation therebetween, fluid sealing means between said externally toothed plates, second fluid sealing means between said internally toothed plates, and fluid pressure means acting between said plates to positively hold said plates under fluid pressure and normal to the axis of rotation of said clutch when said clutch is in said released position and said plates are separated from one another and have relative rotation therebetween, to thereby prevent wobble of said clutch plates.

4,372,435

POSITIVELY DRIVEN STEERING MEMBER FOR CONVEYING APPARATUS

Bernard G. Bradbury, Chico, Calif., assignor to Rexnord Inc., Milwaukee, Wis.

Filed Oct. 27, 1980, Ser. No. 201,666

Int. Cl.³ B65G *47/48, 47/68*

U.S. Cl. 198—356 **17 Claims**

1. A device for supporting and conveying articles on a conveyor and adapted for use as a diverter mechanism for selectively determining the path of the articles, comprising:

a wheel having a spherically curved inner surface defining a central opening and having an outer rim;

a hub having an axial bore adapted to be mounted on a singular shaft for rotation therewith, said singular shaft extending beyond the sides of said hub, and having a spherically curved outer surface adapted to fit inside of said inner surface;

said rim having a circumferential channel adapted to receive a control peg, whereby the relative motion between said wheel and said hub may be controlled;

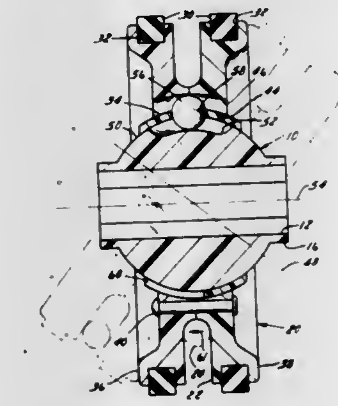

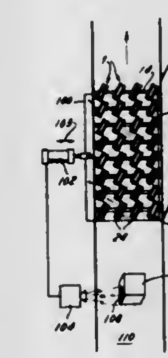

a coupling means for securing said wheel to said hub and permitting the axis of said wheel to be rotated relative to the axis of said hub in any direction while restraining relative motion between said wheel and said hub about the axis of said hub.

4,372,436

APPARATUS FOR DEFLECTING FLAT WORKPIECES THROUGH 180° WITH SIMULTANEOUS ROTATION THROUGH 90°

Fritz Achelpohl, and Richard Feldkamper, both of Lengerich, Fed. Rep. of Germany, assignors to Windmoller & Holscher, Lengerich, Fed. Rep. of Germany

Filed Oct. 10, 1980, Ser. No. 196,122

Claims priority, application Fed. Rep. of Germany, Oct. 10, 1979, 2941151

Int. Cl.³ B65G *29/00*

U.S. Cl. 198—377 **2 Claims**

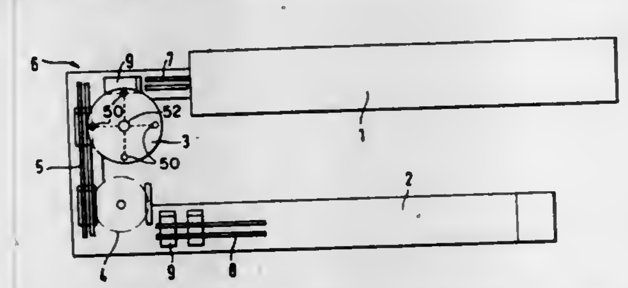

1. Apparatus for deflecting continuously conveyed flat workpieces, preferably tube sections having side folds, through 180° while turning the workpieces through 90°, characterised by the following combination of features:

(a) two double belt conveyors (7, 8) comprising spaced conveyor belts travelling in parallel in opposite directions are spaced apart and parallel,

(b) transversely to the double belt conveyors (7, 8) in front of the delivery and supply ends thereof, respectively, a double belt conveyor (5) bridges the spacing therebetween and has endless conveyor belts divided in the same manner,

(c) on the inside of the angle formed by the transversely extending double belt conveyor (5) and one of the two parallel belt conveyors there are turning means (3) with at least two pairs of grippers which co-operate in the manner of tongs, are disposed on a radial line, engage between every two conveyor belts of the double belt conveyors (7, 5) and are provided with a control that opens the gripper halves when the conveyor belts are being passed and closes them between same, and that takes over the workpieces (9) from the supplying conveyor (7) substantially tangentially and, after rotation through 90°, delivers same substantially tangentially after their introduction into the belt nip of the following perpendicular double belt conveyor (5),

(d) on the inside of the angle formed by the transversely extending double belt conveyor (5) and the other of the two parallel belt conveyors (8) there is a transfer device (4) consisting of at least one pair of parallel arms (10) which extend radially to their common rotary axis (11) and are provided with parallel guide gearing for a respective carrier (23, 24) near the ends of the arms that is secured to a shaft (21, 22) parallel to the rotary axis (11), wherein at least two gripper halves (25, 26) pivoted to each carrier (23, 24) co-operate in the manner of tongs with gripper halves on the opposite carrier and wherein the grippers formed by the gripper halves (13, 14) take over the workpieces (9) from the supplying double belt conveyor (5) substantially tangentially and deliver same substantially tangentially parallel to themselves into the belt nip of the following perpendicular double belt conveyor (8) and are provided with controls which open the gripper halves (13, 14) when the conveyor belts are being passed and close them again between same.

4,372,437

GAUGING ASSEMBLY FOR CAPSULE ORIENTING AND TURNING APPARATUS

Charles E. Ackley, Sr., Oreland, and Charles E. Ackley, Jr., Philadelphia, both of Pa., assignors to R. W. Hartnett Company, Philadelphia, Pa.

Filed Apr. 7, 1980, Ser. No. 137,850

Int. Cl.³ B65G *47/24*

U.S. Cl. 198—380 **7 Claims**

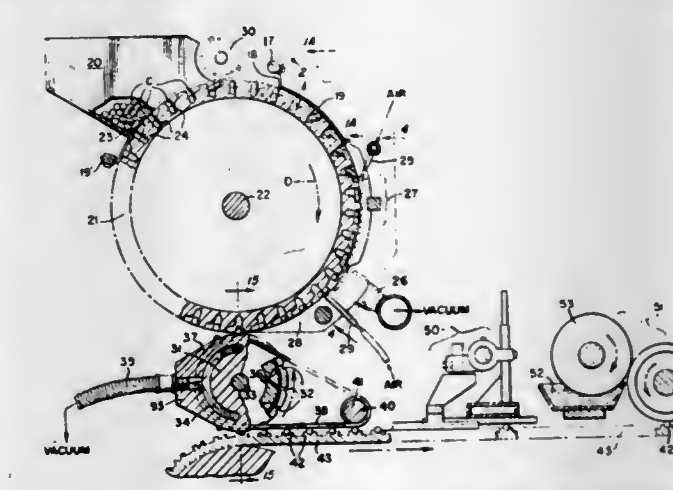

6. In an orienting and turning apparatus for capsules having body portions and enlarged cap portions arranged along substantially a common axis, including a continuously movable capsule transporting cylinder having a plurality of spaced-apart pockets for the capsules, and gauging means adjacent the path of movement of said pockets defining along with a lateral edge of said pockets an elongated passageway proximate the curved surface of said transporting cylinder and extending in the circumferential direction therealong, the width of said passageway being adjustable to maintain said caps-up capsules caps-up by contact therewith as said capsules are transported along said passageway by travel in said pockets formed in said

cylinder as said cylinder rotates whereby all of said cap portions of said caps-up capsules are brought to an attitude in a substantially common direction, one lateral boundary of said passageway being defined by an adjustably movable gauging member of said gauging means including a ceiling extending above said pockets and positioned along the transport direction of said conveyor, and a wall member of said gauging means depending from said ceiling member radially inwardly towards said transport cylinder curved surface along said transport direction in contiguous relation to said ceiling member to form a side of said passageway, said gauging means wall member forming said passageway side extending along a row of pockets, shielding against flow of stray currents of air from neighboring rows, said gauging means wall member being moveable axially with respect to said transport cylinder to adjust said width of said passageway wherein the center line of said passageway moves in the axial direction with respect to said transport cylinder as said wall member moves to adjust width of said passageway.

4,372,438

APPARATUS FOR ADJUSTING INTERVALS OF OBJECTS BEING CONVEYED

Torahiko Hayashi, 2-3, Nozawa-machi, Utsunomiya-shi, Tochigi-ken, Japan

Continuation of Ser. No. 38,215, May 11, 1979, abandoned, which is a continuation of Ser. No. 782,040, Mar. 28, 1977, abandoned, which is a continuation-in-part of Ser. No. 591,041, Jun. 27, 1975, abandoned, which is a continuation-in-part of Ser. No. 287,899, Sep. 11, 1972, abandoned. This application Nov. 13, 1980, Ser. No. 206,633

Claims priority, application Japan, Sep. 10, 1971, 46-70161

The portion of the term of this patent subsequent to Apr. 15, 1992, has been disclaimed.

Int. Cl.³ B65G *47/32*

U.S. Cl. 198—459 **4 Claims**

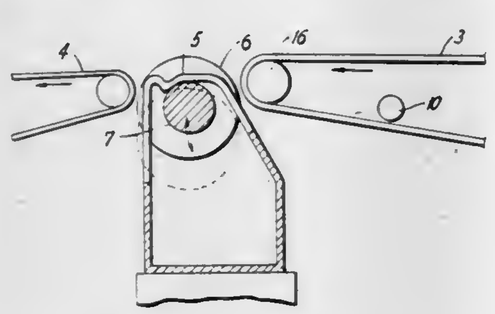

1. An apparatus for adjusting intervals between objects being transported on a series of conveyors, comprising

means including a holding member fixed in position between two of said conveyors for fully supporting each said object individually and retarding movement of said objects from one to the other of said two conveyors, said holding member having a purality of slotted passageways extending between said two conveyors;

a shaft secured for rotation beneath said passageways and having a plurality of radial flanges each aligned with a respective one of said passageways; and

control means operatively associated with said shaft for repetitively raising and lower said shaft in a predetermined sequence for protruding said flanges through said passageways to raise objects held thereon and carry them from one to the other of said two conveyors during rotation of said shaft and thereafter withdrawing them from said passageways, whereby the intervals between the objects may be adjusted without harm to the objects even if they should have soft bottoms.

4,372,439

ELECTRONIC CONVEYOR CONTROL APPARATUS

Guy C. Dempsey, 2197 Mayflower Dr., Woodbridge, Va. 22192

Filed Nov. 25, 1980, Ser. No. 210,463

Int. Cl.³ B65G *43/08*

U.S. Cl. 198—470 **5 Claims**

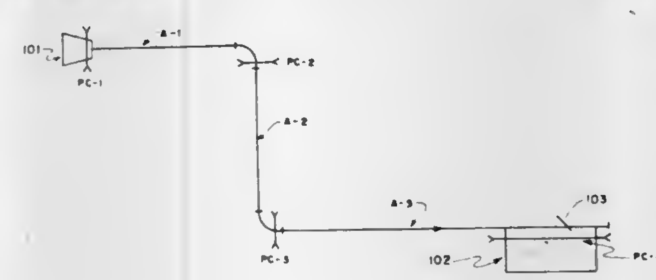

1. A conveying system comprising a plurality of conveyors adapted to move an object from one point to another; electric power means for driving each conveyor, said power means comprising a motor and a starter for controlling said motor, said starter having a starting contact and a stopping contact; photosensing means positioned near the leading ends of each conveyor for sensing the approach of an object to be conveyed; electric control means for said conveying system, said control means comprising separate electrical circuits for each conveyor and timing means in operative electrical association with each of said circuits, said separate circuits being operably interrelated so that the overall functions of the conveying systems are correlated and represent said single control means; each of said photosensors being adapted through said electric circuits to operate the starting contacts of the power means for each of said circuits in response to a change in condition initiated by the approach of the object to be conveyed, said timing means being adapted through said electric circuits to time each object being conveyed to traverse the length of the conveyor and to shut down, through said stopping contact of said power means, the conveyor when the object has traversed its length; said timing means further including, in operative relationship with said electrical circuits, a memory providing for time accumulation such that, should a conveyor be caused to stop in response to an electrical function in said circuits, each timer would hold its accumulated time and upon contact of said conveyor, would resume its time function and cause said conveyor to run for the unexpired portion of said preset time cycle; each of said circuits further including a time delay relay, each relay being operably associated with a photosensor positioned at the leading edge of an adjacent downstream conveyor and adapted to stop the conveyor associated with the given circuit and through said stopping contact of said power means, in response to the blocking of said photosensor for a period in excess of the preset time limit.

4,372,440

END SHAFT MOUNT FOR CONVEYOR

Gerald A. Ringis, Des Moines, Wash., assignor to The Boeing Company, Seattle, Wash.

Filed Dec. 22, 1980, Ser. No. 218,707

Int. Cl.³ B65G *23/44*

U.S. Cl. 198—728 **25 Claims**

1. In a mechanical conveyor of a type having a main frame; a transverse shaft at one end of said main frame, carrying a pair of axially spaced apart chain supporting wheels; and material moving means including a pair of laterally spaced apart endless chains, one on each side of the conveyor, extending about the chain supporting wheel on its side of the conveyor, an improved mount for said shaft, comprising:

a shaft mounting frame in the nature of a first class lever, fulcrum means mounting said shaft mounting frame onto said main frame, for pivotal movement about a transverse pivot axis which is parallel to said shaft, said shaft mounting frame including a first lever portion projecting from said pivot axis toward the shaft and carrying journal mounts for the opposite ends of the shaft, and a second lever portion projecting in the opposite direction from said pivot axis; and adjustable arm means extending between the second lever portion of the shaft mounting frame and a portion of the main frame spaced axially inwardly of said main frame from said pivot axis;

said main frame including sidewalls having aligned shaft end receiving openings therein, said shaft extending laterally

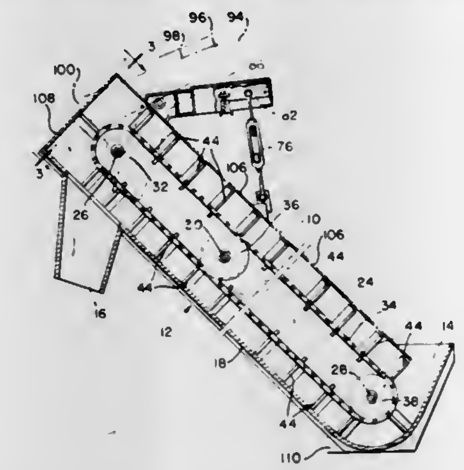

across the main frame and includes end portions which project outwardly through said openings, and the first lever portion of the shaft mounting frame comprising an arm member on each side of the conveyor, each said arm member being located outwardly adjacent the main frame sidewall on its side of the conveyor, and the journal mounts for the opposite ends of the shaft being carried by said arm members.

4,372,441

ACCUMULATING CONVEYOR

Robert Krammer, deceased, late of White Bear Lake, Minn. (by Ruth Krammer, legal representative), assignor to Rexnord Inc., Milwaukee, Wis.

Division of Ser. No. 942,660, Sep. 15, 1978, Pat. No. 4,301,914, which is a continuation-in-part of Ser. No. 831,756, Sep. 9, 1977, abandoned, which is a continuation-in-part of Ser. No. 688,255, May 20, 1976, abandoned. This application Mar. 16, 1981, Ser. No. 244,014

Int. Cl.³ B65G *13/06*

U.S. Cl. 198—781 **4 Claims**

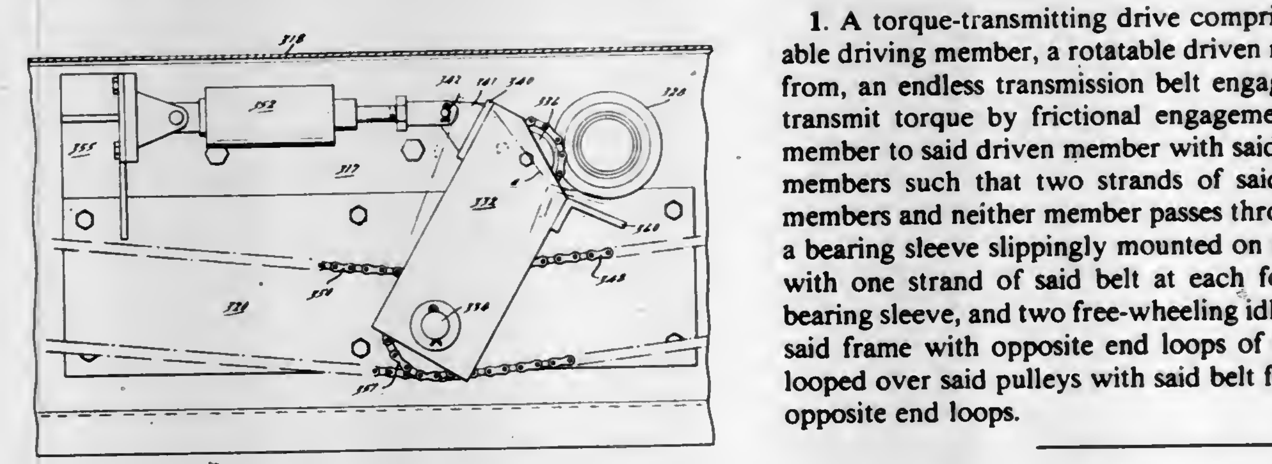

1. A drive module for a conveyor having a plurality of load carrying rollers arranged in generally parallel, side-by-side relationship and mounted for rotation on transversely extending shafts supported by parallel side rails, said drive module comprising:

(a) power means for driving said module comprising at least two endless powered force transmitting members disposed below said load carrying rollers;

(b) a generally vertically extending supporting device mounted to one of said side rails;

(c) rotatable means supported by said supporting device for supporting two of said powered endless force transmitting members;

(d) a rotatable friction wheel operatively connected to said load carrying rollers so that when said friction wheel is rotated it will cause said load carrying rollers to rotate;

(e) a rotatable pressure roller movable between a first position out of engagement with said friction wheel and a second position in which said roller drivingly engages said friction wheel;

(f) power means for drivingly engaging said pressure roller and engageable with said force transmitting power means, including a first continuously driven rotating sprocket disposed on the pivotal axis of said support means, a second rotating sprocket disposed on the rotational axis of and concentrically connected to said pressure roller, and an additional endless chain drivingly interconnecting said two sprockets;

(g) support means on said supporting device for supporting said pressure roller for movement between said first and second positions, said second position being said driving position; and

(h) actuating means for moving said support means from said first position to said second position.

4,372,442

TORQUE-TRANSMITTING DRIVE

Fred J. Fleischauer, Pittsburgh, Pa., assignor to Ermanco Incorporated, Spring Lake, Mich.

Filed Sep. 10, 1979, Ser. No. 73,901

Int. Cl.³ B65G *13/07*

U.S. Cl. 198—790 **5 Claims**

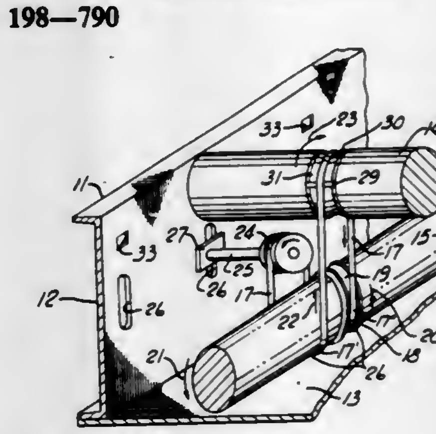

1. A torque-transmitting drive comprising a frame, a rotatable driving member, a rotatable driven member spaced therefrom, an endless transmission belt engaging said members to transmit torque by frictional engagement from said driving member to said driven member with said belt folded over said members such that two strands of said belt pass over said members and neither member passes through said endless belt, a bearing sleeve slippingly mounted on each of said members with one strand of said belt at each fold passing over said bearing sleeve, and two free-wheeling idler pulleys mounted to said frame with opposite end loops of said belt respectively looped over said pulleys with said belt folds intermediate said opposite end loops.

4,372,443

CIGARETTE PACKAGE WHICH HAS DEVICE TO OPEN AND CLOSE

Choi Woo Seop, 567 Hapjeong-Ri, Pyongtaek-Eup, Pyongtaek-Kun, Kyonggi-Province, Rep. of Korea

Filed Feb. 9, 1981, Ser. No. 232,697

Claims priority, application Rep. of Korea, Jan. 24, 1981, 496/81[U]

Int. Cl.³ B65D *85/10, 85/12*

U.S. Cl. 206—264 **1 Claim**

1. A package formed from a folded blank for containing

cigarettes, the package having side surfaces, front and rear surfaces interconnecting the side surfaces, a top surface, and a bottom surface; the top surface of the package having a crease line formed therein spaced from and extending parallel to the plane of the front surface and first and second slots extending from ends of the crease line towards the rear surface; a portion of the blank forming one of the side surfaces having a first crescent-shaped part formed therein by a groove extending between an end of said first slot spaced intermediate said crease line and rear surface and the intersection of said front, said top, and said one side surface; another portion of the blank forming

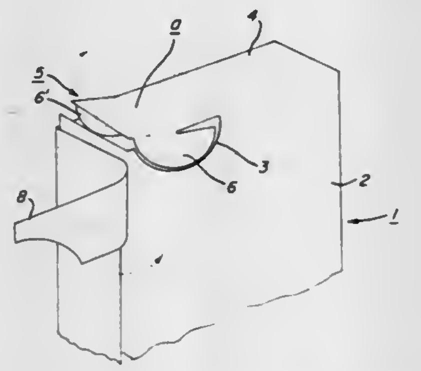

a second crescent-shaped part protruding from the portion of the blank forming the top surface, said second part being separated from the top surface by said second slot and being connected to the portion of the top surface located between said crease and said front surface; portions of said blank when folded being folded over said first and said second crescent-shaped parts to maintain the package closed, said top surface being foldable about the crease line to thereby open the package, wherein one of said-crescent shaped parts has a projecting portion for limiting movement of the top surface about the crease line when the package is opened.

4,372,444
STACKABLE/NESTABLE/DIVIDABLE STORAGE BIN
Alexander J. Le Grand, Hartland, and Richard A. Barnhouse, Watertown, both of Wis., assignors to Menasha Corporation, Neenah, Wis.
Filed May 21, 1981, Ser. No. 265,790
Int. Cl.³ B65D *21/04, 25/06*
U.S. Cl. 206—505 **4 Claims**

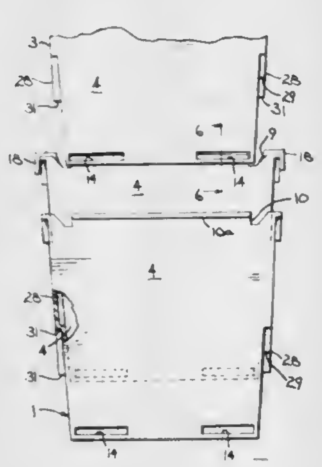

1. In a storage bin having a horizontal bottom wall, vertical side walls, and a vertical rear wall that has horizontal upper and lower edges, the side walls being outwardly inclined from bottom to top with the lower edge of the rear wall being correspondingly shorter than its upper edge,
the improvement wherein:
a central part of the upper edge of the rear wall that corresponds to the length of the lower edge of the rear wall constitutes a stacking tongue including a rearwardly extending lip; the upper rear wall edge has downwardly extending stacking notches at the ends of the stacking tongue; the lower rear edge of the bin defines a transverse stacking channel extending across the length of the lower rear wall edge, said stacking channel comprising front, top and rear surfaces and a bottom surface in the form of a hook flange that leads toward but stops short of the front surface to define a stacking slot that is narrower than the front to rear dimension of the lip, the stacking slot being capable when the front of the bin is tipped upwardly of admitting the stacking tongue of a like bin below into the stacking channel, return of the upper bin to horizontal then putting the elements in a position where the stacking tongue of the lower bin supports the top surface of the stacking channel of the upper bin and is engageable with the other surfaces thereof to limit relative vertical and longitudinal movement of the bins; and the side walls have lower rear corner portions that close off the ends of the stacking channel and are disposed in respective stacking notches when the bin is stacked with a like bin below.

4,372,445
MEDICATION DISPENSER
Paul J. Keffeler, 9706 Brentwood, Omaha, Nebr. 68114
Filed Feb. 19, 1981, Ser. No. 235,933
Int. Cl.³ B65D *83/04*
U.S. Cl. 206—532 **16 Claims**

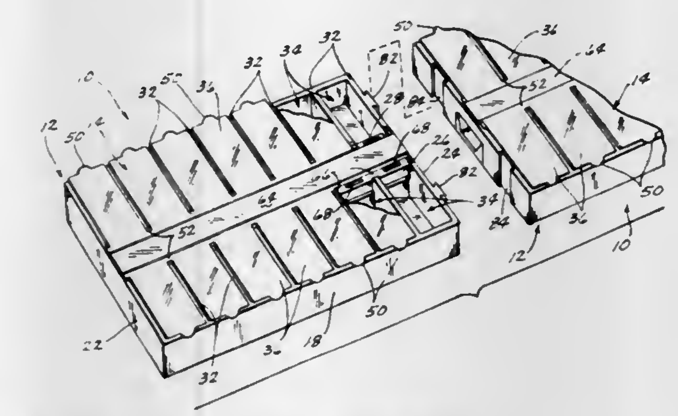

1. A medication dispenser, comprising,
a container comprising a bottom, opposite upstanding side walls, opposite upstanding end walls, a divider wall extended between said end walls in spaced relation from one side wall and a plurality of partitions connected to and extended between said divider wall and one side wall to define a plurality of open topped medication compartments,
a plurality of compartment covers, each adapted to overlie and close a respective one of said compartments,
each cover including a separate integral fracturable tab depending therefrom adjacent one end thereof, and
coacting lock means on said container and on the individual tabs for independently securing each tab in snap fit locked relation onto said container when said covers are positioned to close said compartments whereby each cover is fractured from its respective tab in response to upward movement of the opposite end of said cover to open said compartment.

4,372,446
SELF-LOCKING PROTECTIVE PADS AND BLANK THEREFOR
Matthew S. Konopko, Oak Lawn, Ill., assignor to Stone Container Corp., Chicago, Ill.
Filed May 11, 1981, Ser. No. 262,193
Int. Cl.³ B65D *81/02*
U.S. Cl. 206—586 **9 Claims**

1. A pad for protection of a crated object, formed from a single blank of foldable sheet material, said pad comprising:

A. a pair of multiple-ply wall formations intersecting at an angle to form two walls of a corner configuration.
B. a multiple-ply base formation connected to both of said walls at substantially right angle in said corner configuration;
C. said base formation being of generally L-shaped configuration having conjoined first multiple-ply leg and second multiple-ply leg formations; and
D. said first and second multiple-ply leg formations having

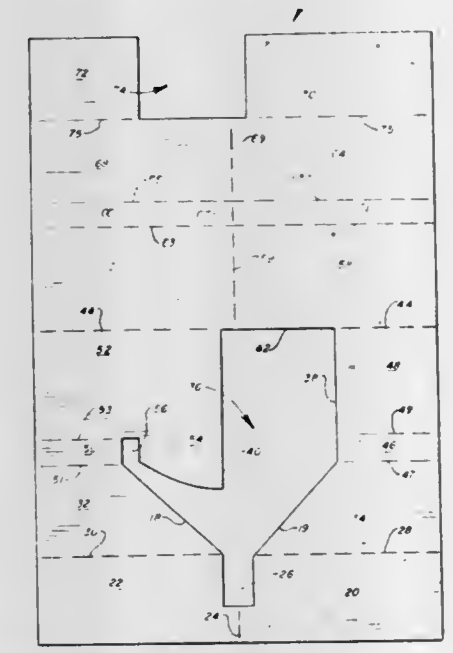

an equal number of overlying plies, the plies of the first leg formation being in generally coplanar alignment with the corresponding plies of the second leg formation, one of the plies of the first leg formation including a projecting coplanar wedge slidably received between a pair of immediately adjacent plies of the second leg formation, one of which corresponds to the ply of the first leg formation from which the wedge projects, said pair of immediately adjacent plies releasably frictionally retaining said wedge against slidable withdrawal from therebetween.

4,372,447
FLUSHABLE TOWELETTE
Gerald D. Miller, Belle Mead, N.J., assignor to Air Products and Chemicals, Inc., Allentown, Pa.
Division of Ser. No. 870,552, Jan. 18, 1978, Pat. No. 4,258,849. This application May 12, 1980, Ser. No. 148,617
Int. Cl.³ B65D *81/24*
U.S. Cl. 206—812 **3 Claims**

1. A packaged towelette composed of a sheet of nonwoven fibers impregnated with a polyvinyl alcohol binder maintained temporarily insolubilized in a gel-like form while in wet condition within said package by contact with a non-alkaline aqueous solution of a soluble salt selected from the group consisting of sodium sulfate and potassium citrate, wherein said temporarily insolubilized polyvinyl alcohol binder is dissolvable by flushing in water.

4,372,448
MULTI-PURPOSE KITCHEN DEVICE
Edward Drach, 275 McLean Ave., Yonkers, N.Y. 10705
Filed Dec. 1, 1980, Ser. No. 211,814
Int. Cl.³ A47F *7/00*
U.S. Cl. 211—41 **19 Claims**

1. A multi-purpose kitchen device comprising first and second opposing surfaces, each having first and second sections, said sections of said first surface being inclined with respect to each other at an angle greater than 180 degrees, said sections of said second surface being inclined with respect to each other at an angle less than 180 degrees, to form a drainage channel in said second surface, first and second side members, extending from and cooperating with the edges of said respective sections of said first surface, to form drainage channels along the sides of said first surface, a first end member mounted on one end of said device, said first end member having first and second

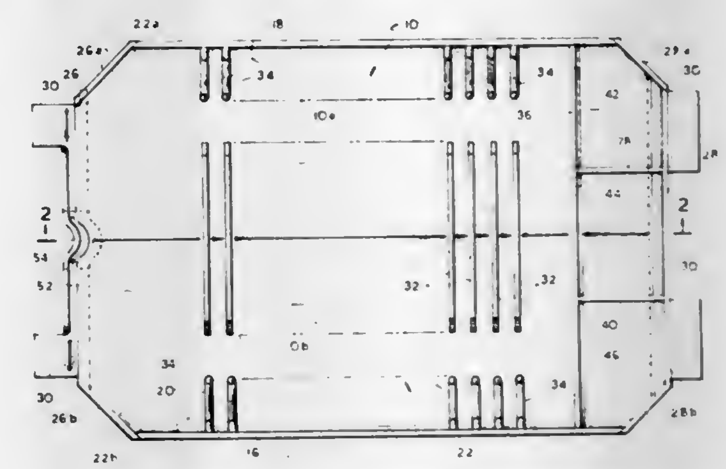

drainage ports aligned with said drainage channels on said first surface, means for supporting each of said surfaces at an incline relative to the horizontal and means, extending from said first surface, for retaining articles thereon.

4,372,449
AUXILIARY TOWEL RACK
Raymond W. Fink, Maple Heights, Ohio, assignor to Tool Dynamics, Inc., Bedford Heights, Ohio
Filed Dec. 26, 1979, Ser. No. 106,757
Int. Cl.³ A47F *5/01*
U.S. Cl. 211—86 **4 Claims**

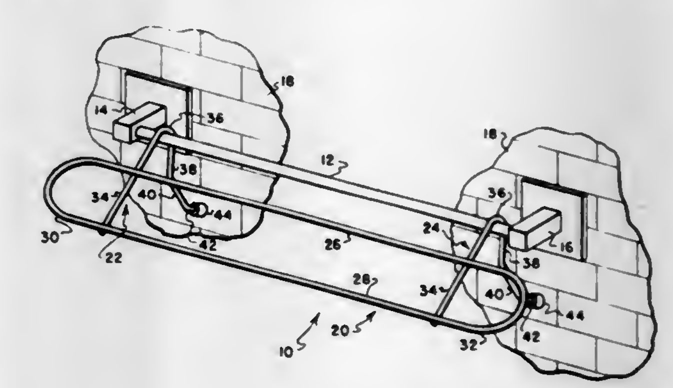

1. An auxiliary towel rack for use with a stationary, horizontally disposed towel bar positioned a fixed distance from a wall, comprising:
(a) a member having at least two elongate sections positioned substantially parallel to the towel bar, the elongate sections lying in a plane positioned at approximately a 45° angle downwardly from the horizontal, the elongate sections located at horizontal elevation at or below that of the towel bar; and
(b) at least two spaced legs connected to the elongate sections and extending between the towel bar and the wall, each leg including:
(i) a first straight section connected to the rack;
(ii) a reversely bent portion extending from one end of the first straight section, the reversely bent portion including a second straight section and a rounded interconnecting portion connecting the first and second straight sections, the first and second straight sections being spaced at approximately a 35° angle;
(iii) a third straight section extending from the second straight section, the third straight section being positioned at approximately at a right angle with respect to the first straight section; and,
(iv) a short, wall-engaging portion, the wall-engaging portion being connected to the third straight section and

extending from the third straight section at such an angle that, in use, the wall-engaging portion is positioned approximately perpendicular to the wall.

4,372,450
HANGING RACKS
Vito Licari, and Yaffa Licari, both of Elberon, N.J., assignors to Basic Line, Inc., Cliffwood Beach, N.J.
Filed Dec. 7, 1981, Ser. No. 327,806
Int. Cl.³ A47F *5/08*
U.S. Cl. 211—87 64 Claims

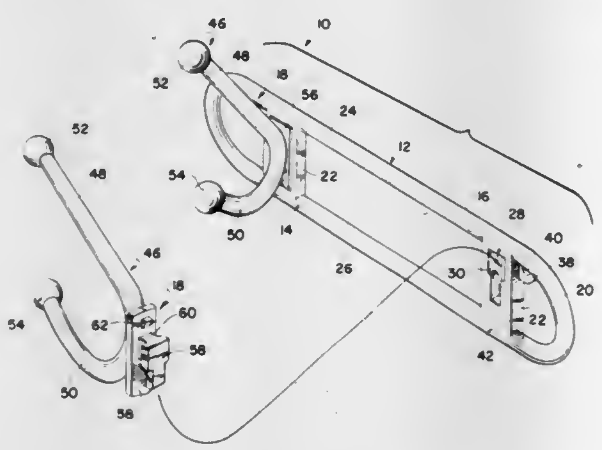

1. A plastic hanging rack, comprising:
plastic hanging means for hanging articles therefrom, said hanging means including a plug, and
a plastic support member, having a front, a back and a receptacle provided internally of said support member, said receptacle having a receiving station sized and shaped so as to form a snap fit with said plug of said hanging means and to releaseably receive said plug of said hanging means when said plug is snapped into said receptacle from said front of said support member towards said back of said support member and a locking station communicating with said receiving station, said locking station being sized and shpaed so as to releaseably lock said plug of said hanging means in said receptacle when said plug is moved from said receiving station to said locking station.

4,372,451
GRAVITY-FEED STORAGE AND DELIVERY SYSTEM
George E. Rasmussen, Richton Park, Ill., and Lucius B. Donkle, Jr., Michigan City, Ind., assignors to Interlake, Inc., Oak Brook, Ill.
Filed Jun. 26, 1980, Ser. No. 163,342
Int. Cl.³ A47F *5/00*
U.S. Cl. 211—187 16 Claims

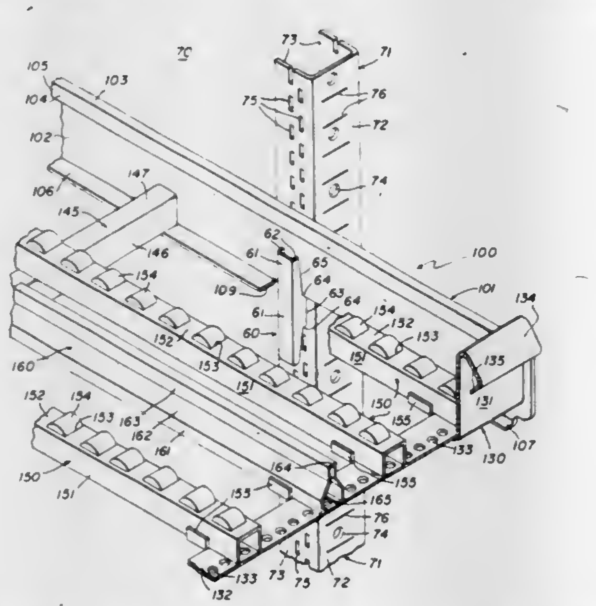

1. A storage shelf for use in a gravity-feed merchandise storage and delivery rack comprising two spaced-apart side frame members interconnected by front and rear frame members, merchandise support tracks mounted between said front and rear frame members and defining parallel rows of merchandise, a cross frame member interconnecting said side frame members between said front and back frame members and below said support tracks, an intermediate guide member mounted between said front and rear frame members and upon said cross frame member and separating adjacent rows of merchandise from each other, and attachment structure adjustable longitudinally of said intermediate guide member and readily removably interconnecting said intermediate guide member and said cross frame member to prevent lateral displacement between said intermediate guide member and said cross frame member as a result of contact with merchandise while permitting quick adjustment of the position therebetween with access only to the ends of said intermediate guide member.

4,372,452
TRANSFER HOIST FOR DISABLED PERSONS
Lawless D. McCord, Garden Grove, Calif., assignor to Independent Transfer Equipment Co., Garden Grove, Calif.
Filed Dec. 24, 1980, Ser. No. 220,123
Int. Cl.³ B66C *17/06*
U.S. Cl. 212—159 5 Claims

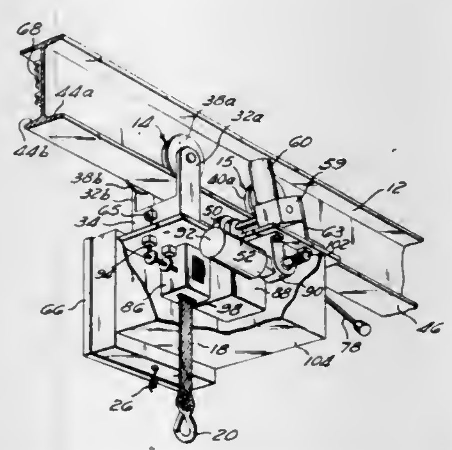

1. A hoist suspended from an overhead rail, for use in living quarters or patient care facilities to bodily lift disabled persons and transport them along said rail from one location to another location within said quarters or facility, said hoist comprising:
trolley means for engaging said overhead rail to permit said hoist to travel along said rail;
a main frame, comprising a unitary, flat, mounting plate;
mounting means for supporting said main frame beneath said trolley means, said mounting means permitting said main frame to move vertically relative to said trolley means;
a winch, mounted on said main frame, for bodily lifting and lowering a disabled person;
power transmitting means, mounted on said main frame, for driving said winch;
a drive wheel, mounted on said main frame, and engaging said overhead rail;
a motor, mounted on said main frame, connected to drive said drive wheel to move said hoist along said rail;
cam means for selectively lowering said main frame relative to said trolley means to disengage said drive wheel and said rail, thereby permitting said hoist to be manually moved along said rail; and said cam means comprising:
a support member, connected to said trolley means;
a cam member, rotatably mounted about a rotational axis on said support member and having first and second surfaces alternately bearing against said main frame, said first surface being closer to said rotational axis than said second surface to support said main frame in a first position relative to said rail when said first surface bears against said main frame and in a second position relative to said rail

when said second surface bears against said main frame; and
means for rotating said cam member to alternately place said first and second surfaces in a bearing relationship with said main frame.

4,372,453
CONTAINER HOLDER
Tony E. Branscum, Winfield, Kans., assignor to Gott Corporation, Winfield, Kans.
Continuation of Ser. No. 148,391, May 9, 1980, abandoned. This application Oct. 26, 1981, Ser. No. 314,564
Int. Cl.³ B65D *23/08, 81/38;* A47J *41/00*
U.S. Cl. 215—13 R 8 Claims

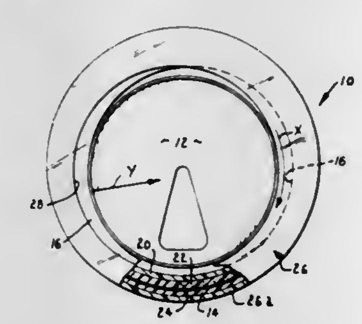

1. A device for holding a cylindrical container, said device comprising:
a generally cylindrical upright support, said support having a generally circular outside surface and a hollow interior for receiving said container,
said hollow interior having an internal diameter of a size to accommodate said container, said interior being further characterized by occupying substantially all of the area of said cylindrical support;
means for presenting an opening in the top of said support corresponding in diameter to the diameter of said container, said opening being further characterized by being eccentric relative to said outside surface;
ring means mounted for pivotal movement over said outside surface and presenting a lip extending perpendicular to the plane of said surface,
said lip presenting an opening corresponding to the opening in the top of said support, said lip opening being eccentric relative to said outside surface and being movable from a first position wherein said openings are aligned to a second nonaligned position wherein said lip engages said container to exert a force against said container along a line corresponding to the contour of said container thereby locking said container between said lip and said means presenting the first-mentioned opening.

4,372,454
BLOW MOLDED CONTAINER WITH HANDLE
Mortimer S. Thompson, P.O. Box 113, Enfield, Conn. 06082
Division of Ser. No. 28,886, Apr. 10, 1979, Pat. No. 4,280,859, which is a continuation of Ser. No. 877,603, Feb. 14, 1978, abandoned. This application Feb. 23, 1981, Ser. No. 237,081
Int. Cl.³ B65D *23/10*
U.S. Cl. 215—100 A 10 Claims

1. A plastic container formed from a preform having a neck portion and an expanded blown portion wherein the neck portion remains constant in size during blowing and wherein the expanded blown portion has a sidewall extending from the neck portion, comprising:
attachment means integral with and on the sidewall,
a handle including a ring intermediate the ends of the neck portion which is integral with and which extends substantially about the neck portion that remains substantially constant in size during expansion, and
a projection positioned substantially within the breadth of the container which has a substantially horizontal portion integral with and extending from said ring, and a substantially vertical portion depending from said horizontal portion that has attachment means thereon which coact with said integral attachment means on said sidewall for

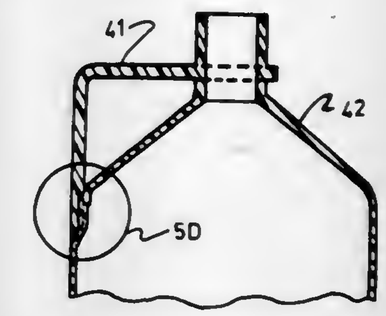

affixing said depending portion thereto, to thereby provide a handle for gripping, lifting and pouring, wherein the stresses resulting therefrom are distributed about said ring.

4,372,455
THIN WALLED PLASTIC CONTAINER CONSTRUCTION
Donald D. Cochran, Bartlett, Ill., assignor to National Can Corporation, Chicago, Ill.
Continuation of Ser. No. 113,176, Jan. 18, 1980, abandoned. This application Nov. 4, 1981, Ser. No. 318,051
Int. Cl.³ B65D *1/02*
U.S. Cl. 215—100 A 62 Claims

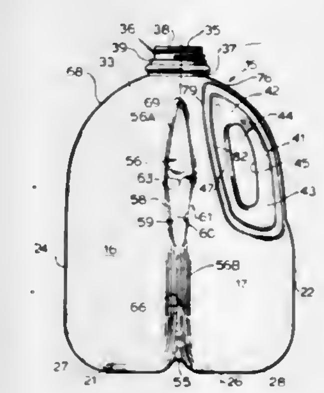

1. A one-piece molded plastic container construction having:
four upstanding sidewall portions symmetrically located about a common longitudinal axis,
curved corner portions interconnecting adjacent side edge areas of respective sidewall portions,
a bottom portion,
curved base portions interconnecting adjacent bottom edge areas of respective said sidewall portions with adjacent edge areas of said bottom portion,
a hollow handle formed generally in a region extending along a first of said curved corner portions and generally within the profile thereof, the portion of said handle intermediate the end portions being spaced by an aperture from a panel section which extends between the pair of sidewall portions adjoining said first curved corner portion,
a top portion having a mouth region, which mouth region is coaxial with said longitudinal axis, said top portion being interconnected with adjacent top edge areas of respective sidewall portions,
the upper end areas of said handle and said panel section being each interconnected with said top portion and the lower end area of said handle being interconnected with an upper portion of said first curved corner portion, and
first and second ribbing structures, each one thereof being respectively defined longitudinally in opposed second and third said curved corner portions adjacent said first curved corner portion, each one of such ribbing structures including two matching ridge line members, each such

ribbing structure extending in its respective associated curved corner portion approximately from a position in said top portion in spaced relationship to said mouth region at least to the top edge areas of said curved base portions, and each such ribbing structure having its respective two ridge line members spaced laterally from one another therealong, this lateral spacing is at a maximum in a location which is situated generally between said bottom edge areas of said top portion and said lower end area of said handle.

4,372,456
SECURITY CLOSURE FOR BOTTLES
Piergiacomo Guala, Alessandria, Italy, assignor to Angelo Guala S.p.A., Corso Romita, Italy
Filed Jul. 1, 1981, Ser. No. 279,480
Claims priority, application Italy, May 28, 1980, 22366 A/80
Int. Cl.³ B65D *41/34*
U.S. Cl. 215—252 **5 Claims**

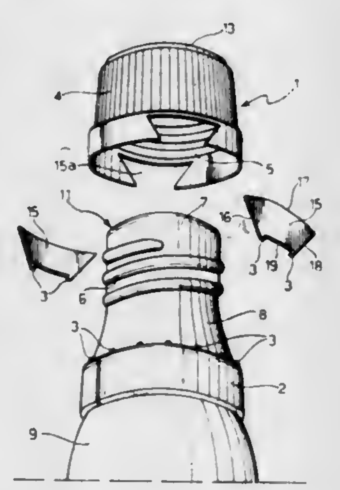

1. Security closure for a bottle having a neck with an annular flange adjacent its mouth and external screw-threading between the flange and the mouth, said closure comprising a cap with a lateral wall, which is screwed on to the bottle neck; a ring engaged with the annular flange of the neck, and a plurality of links interconnecting the ring and the free edge of the wall of the cap, said links being breakable when the cap is rotated and displaced axially relative to the ring upon opening of the bottle wherein the improvement consists in said lateral wall of the cap having at least one portion adjacent its free edge which is separate from the remainder of said wall and is connected to said ring by at least one of said breakable links.

4,372,457
CLOSURE CAP HAVING PRIZE MARKINGS AND PEELABLE LINER
Go Kunimoto, Chigasaki; Isao Ichinose, Hiratsuka; Noboru Suzuki, Fujisawa, and Fumio Mori, Yokohama, all of Japan, assignors to Toyo Seikan Kaisha, Ltd., Tokyo, Japan
Filed Nov. 26, 1979, Ser. No. 97,370
Claims priority, application Japan, Nov. 25, 1978, 53-144968; Jul. 18, 1979, 54-090334
Int. Cl.³ B65D *53/04*
U.S. Cl. 215—228 **14 Claims**

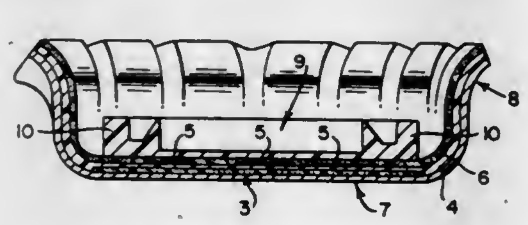

1. A closure cap comprising a cap shell, a liner adhered to the inside surface of said shell through a plurality of adjacent coating layers having peelable interfaces therebetween and an ink layer containing printed matter on one of said coating layers and positioned between two adjacent coating layers; the improvement comprising in that said liner has a starting portion for initiating peeling of the liner from the cap shell, in that the coating layer adjacent said liner comprises a topmost layer, in that a coating layer adjacent said topmost layer comprises an intermediate layer having said ink layer thereon, in that the peel resistance between said topmost layer and said intermediate layer is less than the peel resistance between the topmost layer and said liner, in that the coating layer adjacent said intermediate layer on the opposite side thereof from the topmost layer comprises a bottommost layer, and in that the peel resistance between said adjacent coating layers adjacent said starting portion is less than the peel resistance between adjacent coating layers further away from said starting portion.

4,372,458
PROTECTIVE SKIRT ASSEMBLY FOR A CONTAINER
Franklin J. Carlson, 1081 Wisconsin Ave., Okauchee, Wis. 53069
Continuation-in-part of Ser. No. 146,750, May 5, 1980, abandoned. This application Sep. 14, 1981, Ser. No. 301,516
Claims priority, application Canada, Apr. 8, 1981, 374959
Int. Cl.³ B65D *25/24, 25/30*
U.S. Cl. 220—71 **6 Claims**

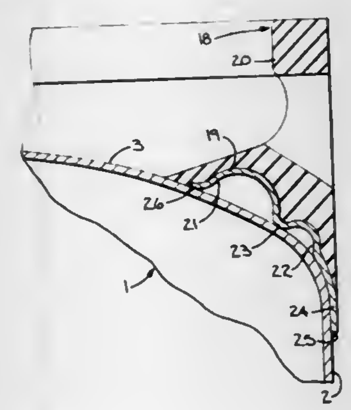

1. A tank construction, comprising a metal tank having a dome-shaped head, a sheet metal ring contoured to complement the peripheral edge portion of the head and having an outer surface and an inner surface, said ring also having an inner peripheral edge and an outer peripheral edge, a weld connecting at least one of said peripheral edges to said head, said ring having an annular outwardly extending convolution spaced from said peripheral edges, and a molded resilient skirt bonded to the outer surface of said head and completely enclosing said convolution.

4,372,459
ANNULAR SEAM BETWEEN TWO CONTAINER BODY HALVES
Fred C. Newman, La Grange, Ill., assignor to The Continental Group, Inc., Stamford, Conn.
Filed Dec. 12, 1980, Ser. No. 215,602
Int. Cl.³ B23P *11/02*
U.S. Cl. 220—76 **5 Claims**

1. An annular seam between two thin wall container halves, said seam comprising a first container half open end portion of a generally cylindrical configuration and terminating in a free edge, a second container half open end portion; said second container half open end portion including an axially displaced generally cylindrical part of the same size as said first container half open end portion; a generally frustoconical transition part joining a radially displaced generally cylindrical sleeve part to said axially displaced generally cylindrical part, said sleeve part being radially offset from said first container half open end portion, and a reversely turned hem carried by said sleeve part and on the side of said sleeve part facing away from the direction of radial displacement of said sleeve part, said hem terminating in a free edge, said axially displaced generally cylindrical part, said transition part, said sleeve part and said hem combining to define an annular chamber; an adhesive in said annular chamber in engagement with said hem free edge in sealing relation, said first container half open end portion being telescoped relative to a part of said second container half open end portion in sliding engagement with said hem and with said free end thereof aligned with said second container half generally cylindrical part and in axially opposed relation to said transition part, and a portion of said adhesive filling the space between said first container half free end and said transition part and in engagement with said first container half free end in sealing relation.

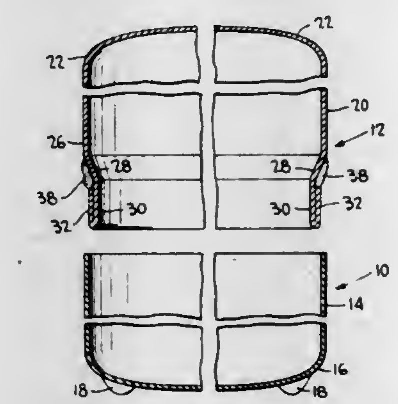

4,372,460
OIL-RESISTANT CLOSURE SYSTEM
Wilfred R. Brochman, Oakdale; Rodney R. Hannula, Maplewood, and Bradley H. Jorgensen, Cottage Grove, all of Minn., assignors to Minnesota Mining and Manufacturing Company, St. Paul, Minn.
Filed May 18, 1981, Ser. No. 264,833
Int. Cl.³ B65D *51/22*
U.S. Cl. 220—258 **12 Claims**

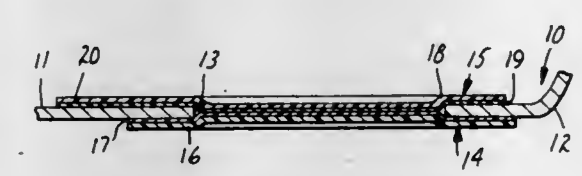

1. An easy opening closure system comprising a container end portion having an opening therein, said closure system further comprising:

(a) an exterior tape comprising a backing and a pressure sensitive adhesive layer, said exterior tape being situated circumjacent said opening and being firmly adhered to the top surface of said container end portion circumjacent said opening by means of said pressure-sensitive adhesive layer; and

(b) a protective tape comprising a barrier layer and an oil-resistant thermoplastic adhesive layer firmly bonded to said barrier layer, said protective tape being firmly bonded to the bottom surface of said container end portion circumjacent said opening by means of said thermoplastic adhesive layer, and further being firmly bonded to said exterior tape in the area of said opening by means of said pressure-sensitive adhesive layer and said thermoplastic adhesive layer.

4,372,461
COVER BALANCE ASSEMBLY AND GASKET PROTECTOR DEVICE
Michael J. Lerman, Edison, and William Zamory, Somerville, both of N.J., assignors to De Dietrich (USA) Inc., Union, N.J.
Filed Dec. 2, 1981, Ser. No. 326,516
Int. Cl.³ B65D *17/50, 41/02, 43/24*
U.S. Cl. 220—260 **15 Claims**

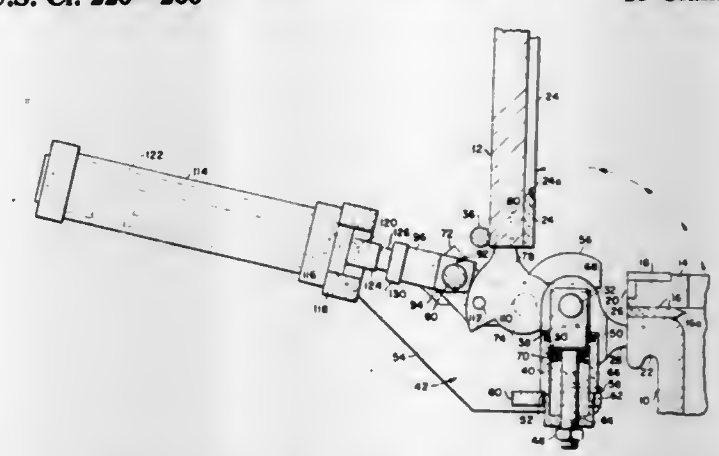

1. A vessel formed by a closed-wall structure including a nozzle providing an entryway to the interior of said structure, a cover movable from a position at which it is juxtaposed said entryway to and from positions either to seal said entryway or to open said entryway, a pair of lugs, said lugs being mounted on said vessel in spaced relation, each lug extending from said vessel and formed with an elongated vertical opening, a pin extending through said openings in said lugs, hinge means mounted on said cover and received on said pin for movement of said cover pivotally to and from said entryway open positions, and means acting between said lugs and pin exerting a constant force urging said pin upwardly in said vertical openings whereby said cover may locate to said juxtaposed position providing a clearance between said cover and nozzle at least within the region between said lugs under conditions that said cover is out of sealing engagement.

4,372,462
RETAINED RING TAB
Karl O. Dassler, Algonquin, and Neal E. Langseder, Rolling Meadows, both of Ill., assignors to American Can Company, Greenwich, Conn.
Filed May 12, 1981, Ser. No. 262,926
Int. Cl.³ B65D *17/34*
U.S. Cl. 220—269 **8 Claims**

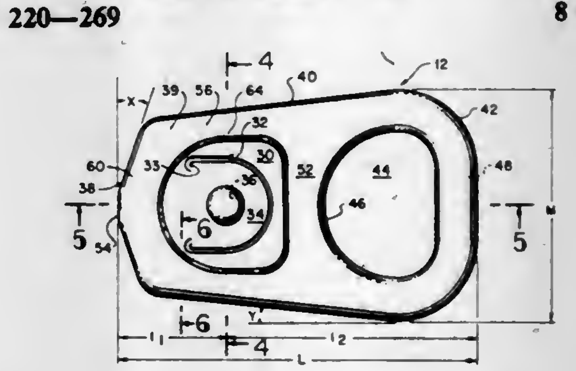

7. A lever tab for easy open ends comprising:

(a) a pair of dog leg levers disposed symmetrically about a longitudinal axis, each lever including an upper planar flange and a lower planar flange said planar flanges being parallel one to the other and at least 0.050″ in width and wherein said flanges are joined by a curl with a radius of 0.030″ and wherein said levers are formed with a short forward leg and a long lateral leg with said forward legs joined together to form the nose of said tab with an included angle therebetween of 150° and wherein said lateral legs are inclined at an angle of 3° to said longitudinal

axis with the included angle between said forward leg and said lateral leg of 108°,

(b) a raw edge at said nose and being in the plane of said upper planar flange in the area where said forward legs joined together and said nose including portions about said raw edge in the plane of said lower planar flange for contact with an end;

(c) a web joining said levers, the forward portion of said web being recessed to form a deboss panel with ascending walls inclined at an angle of about 60° to said deboss panel, said ascending walls joining said upper flange with said deboss panel to strengthen and buttress said upper flange against collapse and wherein said deboss panel is lanced to form a tongue for attachment in the plane of said lower planar flange to hold the portions of said nose against an end and wherein the rear portion of said web is apertured to provide a finger hole;

(d) a tab lift disposed rearward of said tab nose and transversely to said longitudinal axis, the extremities of said lift joining said lateral legs to form a pentagonal tab with a narrow nose and wide lift; and

(e) said tongue attachment being less than half as far as from said lower flange portions about said edge than said lift.

4,372,463

APPARATUS AND METHOD FOR FEEDING THIN PARTS

Patrick D. Notarione, Sagertown; Ronald K. Turk, and Gerald Grafius, both of Erie, all of Pa., assignors to Swanson-Erie Corporation, Erie, Pa.

Filed Nov. 26, 1980, Ser. No. 210,853

Int. Cl.³ B65H *1/30*

U.S. Cl. 221—10 **15 Claims**

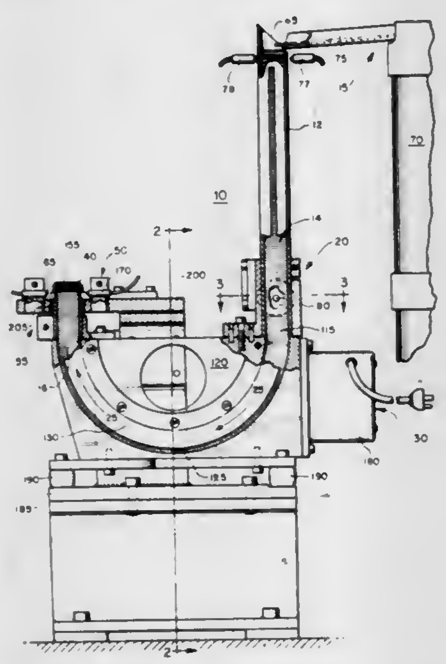

1. An apparatus for feeding and positioning thin parts comprising:

a tube for containing a plurality of thin parts in a stack arrangement, having a loading end and a dispensing end, the length of said tube being J-shaped and mounted in a vertical position;

means disposed at said dispensing end of said tube for separating at least one of said parts from the remainder of said plurality of parts and positioning said part at said dispensing end of said tube, said separating means being disposed about the length of said J-shaped tube defining said dispensing end; and

means for feeding said plurality of parts from said loading end to said dispensing end, said feeding means including brake means disposed about the length of said J-shaped tube opposite said dispensing end to control movement of said parts along at least a portion of the length of said tube, sensing means disposed near said dispensing end for measuring the number of parts located at said separating means, and means for vibrating at least a portion of said J-shaped tube, said sensing means periodically releasing said brake means when the number of parts located at said separating means falls below a predetermined amount, such that said parts flow along said tube to said separating means, said sensing means re-engaging said brake means when the number of parts located at said separating means reaches the predetermined amount.

4,372,464

VENDING MACHINE CONTROL CIRCUIT

David M. Otten, Newton, Mass., assignor to PepsiCo Inc., Purchase, N.Y.

Filed Jun. 16, 1980, Ser. No. 159,625

Int. Cl.³ G07F *9/02*

U.S. Cl. 221—14 **9 Claims**

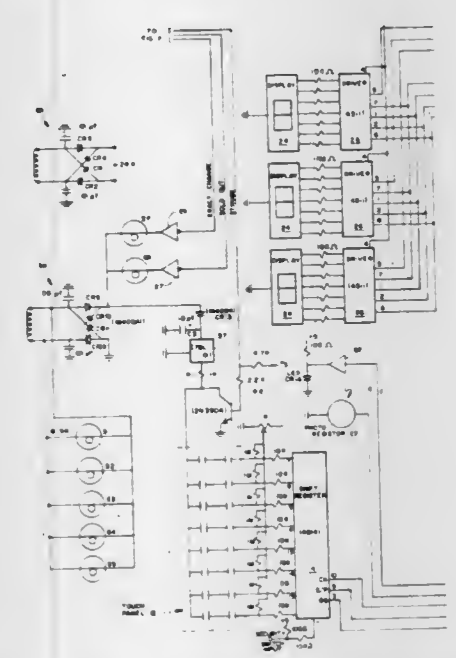

1. A vending machine control circuit, comprising:

a. a plurality of switch means for enabling a customer to indicate his choice of a product to be vended;

b. logic means, coupled to said plurality of switch means and being responsive thereto, for controlling the vending of products by the generation of vend signals;

c. a plurality of vend actuation means, responsive to said vend signals from said logic means, for vending a plurality of products;

d. a plurality of out-of-product switches, each switch having a pair of cooperating contact elements and one switch being provided for each vend means with its electrical contact elements being electrically connected in series with the vend means and being opened by the absence of product for that vend means, such that each switch prevents current from flowing through its associated vend means when an out-of-product condition exists therefor; and

e. a common current sensing circuit for all of the vend means for detecting current flowing through each vend means when it is activated by said logic means, whereby the absence of current flowing through a vend means when the vend signal is generated therefor indicates the out-of-product switch associated with that vend means is open and an out-of-product condition exists therefor.

4,372,465

COUNTER DISPENSER FOR CONES

Candace J. Alcorn, 3697 W. Valley Green, Ft. Lauderdale, Fla. 33328

Filed Dec. 31, 1980, Ser. No. 221,702

Int. Cl.³ B65D *88/54*

U.S. Cl. 221—131 **13 Claims**

9. A dispenser for generally cone-shaped articles stacked in a plurality of adjacent stacks in a vertically elongated shipping container having a rectangular external cross-section between its top and bottom, said dispenser comprising:

an open-topped housing having a rectangular internal cross-section substantially complementary to the external cross-section of said shipping container for slidably receiving the latter;

means for mounting said housing in an opening in a counter top with said housing extending down from the counter top;

a follower plate mounted for vertical movement within said housing and shaped and dimensioned to move freely along the inside of the shipping container when the latter is received in said housing with its top and bottom open;

a spring under compression below said follower plate urging the follower plate upward to push the stacks of generally cone-shaped articles up along the inside of said container; and a retainer disposed generally flush with the top of and extending across the top of said housing and defining openings aligned with the stacks of articles through which the articles may be pulled up manually, said retainer presenting flexible and resilient fingers adjacent said openings for holding down the uppermost articles.

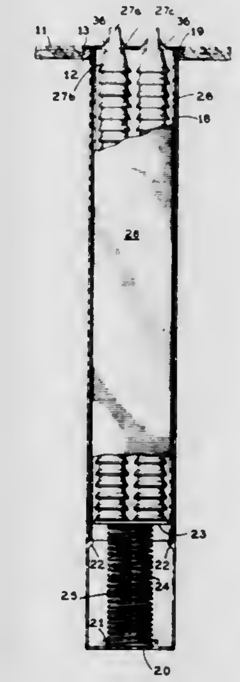

4,372,466

VESSEL FOR STORING PARTICULATE MATERIALS AND METHOD OF EMPTYING

Andre Reimbert, 67, Boulevard de Reuilly, F-75012 Paris, France

Filed Nov. 20, 1980, Ser. No. 208,637

Claims priority, application France, Nov. 21, 1979, 79 28683

Int. Cl.³ B65G *65/34*

U.S. Cl. 222—482 **8 Claims**

1. A vessel for the storage of materials in granular or powdered form in which a bottom discharge opening is formed in the lower end of said vessel and fitted with a shut-off valve, wherein the lower end of said vessel is provided with a second discharge opening fitted with a shut-off valve, there being connected to said second discharge opening a vertical emptying tube which extends within the vessel and the top orifice of which is located at a level between ¼ and ¾ of the total height of the vessel, said level being such that, at the time of final emptying of the lower portion of the vessel through the discharge opening in the lower end of said vessel, the curve of overpressures resulting from said emptying operation is close

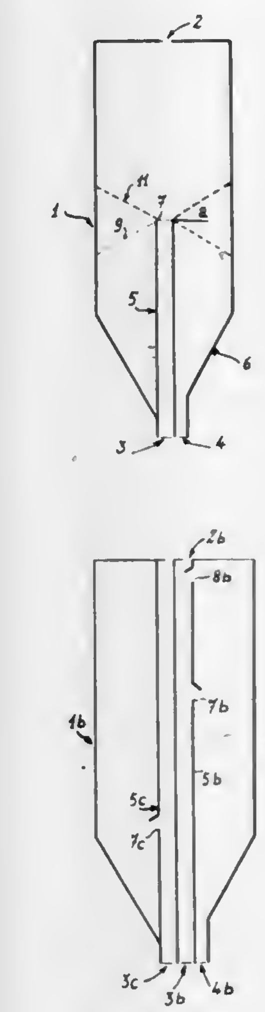

to the curve of static pressures generated by all the material stored within the vessel when said vessel is full.

4,372,467

DISPENSING VALVE TO BE USED WITH BOTTLES OF FLUENT IMAGING MATERIAL FOR THE DEVELOPMENT OF ELECTROSTATIC IMAGES

Frederick J. Pritchitt, Kingston, N.Y., assignor to Marpac Industries, Inc., Kingston, N.Y.

Continuation-in-part of Ser. No. 157,510, Jun. 9, 1980, abandoned. This application Sep. 18, 1981, Ser. No. 303,379

Int. Cl.³ B65D *47/06*

U.S. Cl. 222—501 **3 Claims**

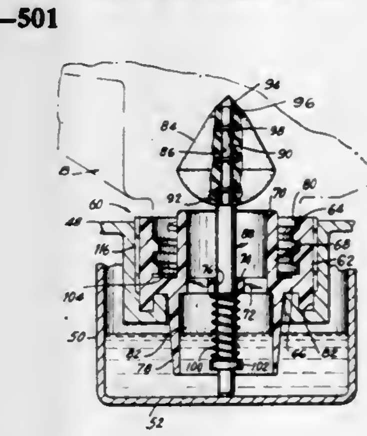

2. A dispensing valve to be used on a supply bottle containing a fluent imaging material adapted to be employed in an electrostatographic copying machine, said bottle including a male half of a coupling means, said valve comprising:

(A) a valve cap having a skirt that is provided internally with a female half of a coupling means adapted to mesh with the male half of the coupling means on the bottle neck,

(B) the valve cap having a central opening for passage of fluent imaging material from the bottle therethrough,
(C) a spider in said opening,
(i) the spider having a bore coaxial with the opening in the cap,
(D) a valve seat at the end of the central opening in the cap and facing the interior of the bottle,
(E) a plastic spindle extending through the bore in the spider,
(i) a flange molded in one piece with the spindle on the side of the spider remote from the valve seat,
(F) a helical compression spring under compression between the spider and the flange,
(G) the spindle having on the side of the spider remote from the spring a portion of reduced diameter to form a first shoulder where it joins the remainder of the spindle,
(H) the spindle further having a top portion above the seat and adapted to be received within the bottle when the dispensing valve is mounted thereon, said top portion being pointed and having a base with a diameter greater than that of the reduced diameter portion of the spindle to form with the reduced diameter portion of the spindle a second shoulder facing the first shoulder,
(J) a resilient centrally bored valve plug friction fitted on the reduced diameter portion of the spindle with its upper end butting against said second shoulder, and
(K) the reduced diameter of the spindle including at least one annular rib to engage the central bore of the valve plug and inhibit axial shifting of said plug.

3. A dispensing valve as set forth in claim 2 wherein said rib has a steeply inclined side facing the spider.

4,372,468
TOOL HOLDER
Robert P. Harvey, Northridge, Calif., assignor to McGuire-Nicholas Manufacturing Company, Los Angeles, Calif.
Filed May 8, 1981, Ser. No. 261,911
Int. Cl.³ A45F *5/00*
U.S. Cl. 224—268 **6 Claims**

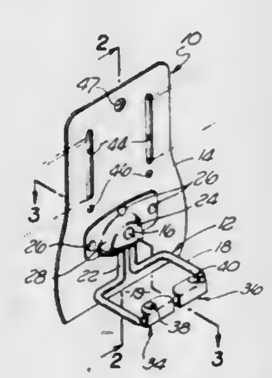

1. A tool carrying device for supporting an implement of the type having an elongated handle and transverse head portion, said device comprising: a support backing; a tool support loop defining two extended open ends and being pivotally mounted on said backing such that said loop extends substantially perpendicularly with respect to said backing; a pair of gate members, one of said members being pivotally mounted on each of said open ends of said tool support loop; and means for biasing certain gate members to a position substantially parallel with said backing.

4,372,469
ARTICLE CARRIER HAVING VARIABLY POSITIONABLE CROSS-RAIL BRACKET
Daniel J. Kowalski, Ortonville, and Douglas J. Ferguson, Davisburg, both of Mich., assignors to Four Star Corporation, Troy, Mich.
Continuation of Ser. No. 24,994, Mar. 29, 1979, Pat. No. 4,245,764. This application Jun. 18, 1980, Ser. No. 160,804
Int. Cl.³ B60R *7/00*
U.S. Cl. 224—321 **2 Claims**

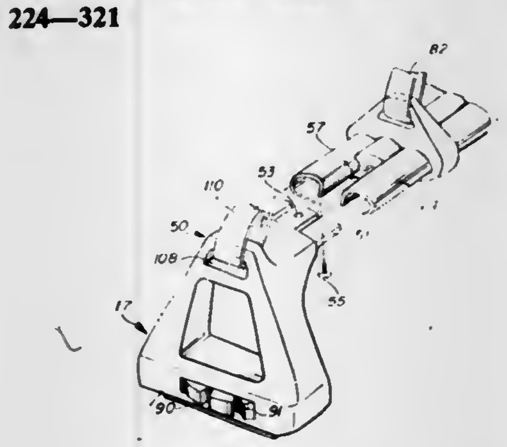

1. An article carrier for an automotive vehicle of the type including an elongated slat fixed to the vehicle exterior and extending longitudinally thereof, said slat having an upwardly opening guideway, a bracket having a base portion slidably retained in said guideway, means for adjustably clamping the bracket to the slat, the bracket having an upper portion which includes a cross-rail supporting section extending normally of the slat, and a cross-rail mounted upon the cross-rail supporting section, the improvement comprising:
(a) the cross-rail being of generally oval cross section wherein the maximum depth of the cross-rail is substantially less than its width, said cross-rail including
a continuous and upwardly curving bottom surface,
a downwardly curving upper surface and having an upwardly opening channel formed by a pair of side walls extending downwardly from said upper surface, said downwardly extending side walls terminating proximate the bottom surface of the cross-rail, said channel and side walls extending throughout the length of the cross-rail,
(b) the cross-rail supporting section of said bracket including an opening being generally of the same oval cross section as the cross-rail and adapted to telescopingly receive one end of the cross-rail.

4,372,470
CAR RACK
Michel J. Dallaire, Montreal, Canada, assignor to Bic Corporation, Milford, Conn.
Filed Nov. 25, 1980, Ser. No. 210,341
Int. Cl.³ B60R *9/12*
U.S. Cl. 224—324 **32 Claims**

1. A car rack adapted to be secured, at least in pairs, on the top of a car for carrying articles, comprising:
an elongated support base having support means resting on the top of the car for supporting said base spaced from said top,
resilient means extending longitudinally across said support base and captive in a channel thereof and adapted at their opposed ends to removably but solidly secure said support base on the top of the car, and
one or more carrying elements removably connected to said support base for carrying articles, each carrying elements being a reversed T-shaped element having a web and a transverse leg, one side of the leg being longer than the other side thereof, a tail portion integrally connected to the free end of said web and being perpendicularly bent with respect thereto, a bail element opposite said web and connected to the long side of said leg, said bail element having locking means at its free end to engage with corresponding locking means provided at the free end of said bail portion, and a bumper element being connected to said reversed T-shaped element opposite said bail element.

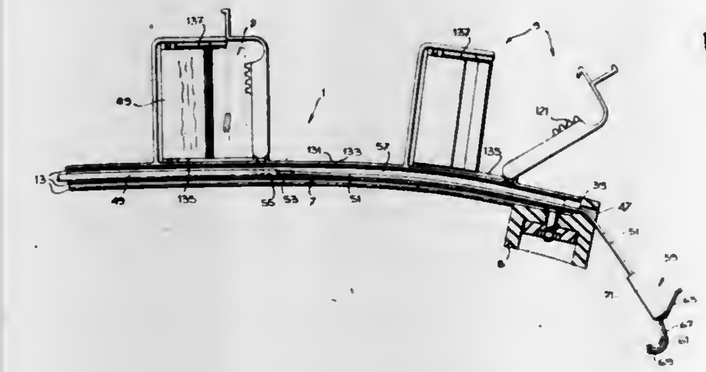

4,372,471
GLASS CUTTING SYSTEM
Luis Galindez, Llodio-Alava, Spain, assignor to Vidrierias de Llodio, S.A., Spain
Continuation-in-part of Ser. No. 955,071, Oct. 26, 1978, abandoned. This application Oct. 17, 1980, Ser. No. 198,095
Int. Cl.³ B26F *3/00*
U.S. Cl. 225—1 **1 Claim**

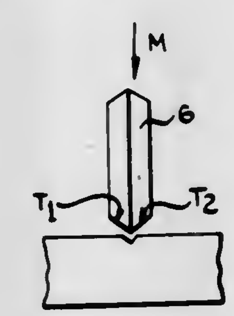

1. In a method of cutting a piece of glass with a rotary glass-cutter supported for rotation about a generally horizontal axis to move along a path relative to the piece of glass to be cut, the steps of
measuring the thickness of the piece of glass to be cut,
selecting a rotary cutter having a diameter substantially in the range of nearly equal to the thickness of said piece of glass to twice the thickness of said piece of glass,
selecting a cutting angle on said rotary cutter equal to substantially

$$2 \times \text{arc sine}\left(1 - \frac{0.18}{\text{the thickness of the glass}}\right)$$

with the angle measured in sexagesimal degrees and the thickness of the glass measured in millimeters,
applying a constant pressure on said rotary cutter as it moves along the surface of said piece of glass in order to sever said piece of glass completely through its thickness along the line of cutting by a single stroke of said cutter along the surface of said piece of glass solely by the action of said cutter.

4,372,472
TAPE DISPENSER
Fred Herrmann, 330 Main St., Dickson City, Pa. 18519
Filed Apr. 3, 1981, Ser. No. 250,885
Int. Cl.³ B26D *1/02*
U.S. Cl. 225—80 **12 Claims**

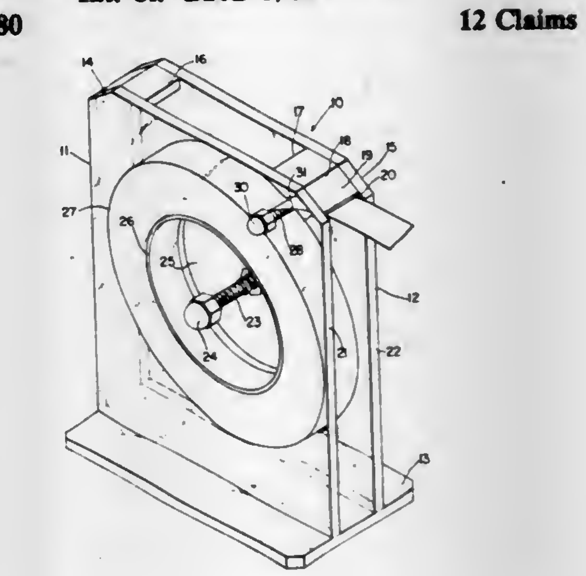

1. A dispenser for tapes comprising a base, a dispensing frame having a pair of spaced parallel like sidewalls upstanding from said base and each sidewall being substantially square in shape, a shaft between the centers of said sidewalls, a mounting disk on said shaft to carry a roll of tape thereon, a cutter edge at an upper corner of said housing and between said sidewalls, a rotatable roller having means thereon for defining a moving point contact and disposed above a radius extending from said center shaft to said cutter edge and closely spaced from the largest diameter of a roll of tape carried on said shafts and mounting disk, an adhesive side of said tape passing over said roller and below said cutter edge whereby the tape can be pulled out from the roll at an angle between 110° and 160° to a desired length outwardly of the dispenser and then cut by its non-adhesive side being moved upwardly against said cutter edge.

4,372,473
STITCHING ASSEMBLY
Alan S. Holdsworth, Broadstone, England, assignor to McCorquodale Machine Systems Limited, Basingstoke, England
Filed Jan. 27, 1981, Ser. No. 229,022
Claims priority, application United Kingdom, Jan. 31, 1980, 8003351
Int. Cl.³ B27F *7/02*
U.S. Cl. 227—3 **15 Claims**

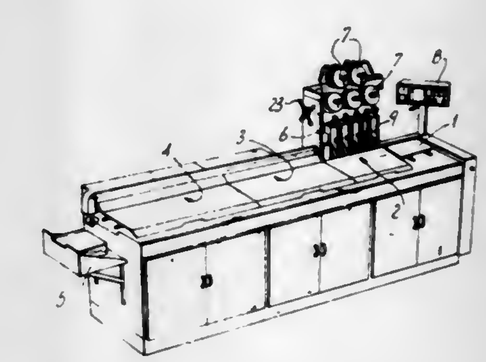

1. A stitching assembly for stitching together sheets of paper, card, and similar materials comprising:
a plurality of stitching machines, each of said stitching machines including a stitching head, a clinch block, and means connecting together said stitching head and said clinch block to form a unitary stitching machine;
a frame;

means mounting said plurality of stitching machines on said frame for movement along said frame as a complete unit;

a code bar assembly, said code bar assembly including a plurality of code bars and co-operating means on said code bars distributed along the length of said code bars, the spacing of the co-operating means on each of the code bars being different from that upon each other of the code bars, and, means to move said code bars; and,

co-operating means on the said stitching machines, said co-operating means on said stitching machines co-operating with said co-operating means on said code bars to locate said stitching machine at predetermined positions along said frame, said predetermined position being determined by said spacing of said co-operating means along said code bar adjacent said stitching machines, said means to move said code bars enabling a selected one of said code bars to be associated with said co-operating means on said stitching machines whereby the spacing of said stitching machines along said frame is variable.

4,372,474

FULL FUNCTION IN-PLACE WELD HEAD

James T. Taff, Simi Valley, Calif., assignor to Dimetrics, Inc., Diamond Springs, Calif.

Filed Nov. 28, 1980, Ser. No. 211,359

Int. Cl.³ B23K *9/00*

U.S. Cl. 228—29 **6 Claims**

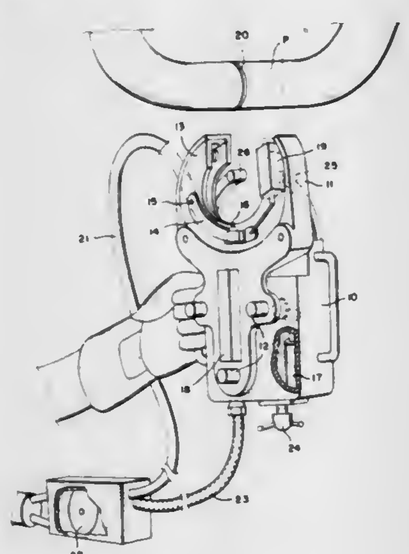

1. A full function, in-place weld head including, in combination:

(a) a pipe clamping structure having spaced clamping shoes for engaging and clamping an in-place pipe to hold the structure stationary relative to said pipe;

(b) a welding mechanism surrounding a portion of the pipe adjacent to said pipe clamping structure;

(c) parallel movement control means coupling said welding mechanism to said clamping structure for guided back and forth movement in an axial direction along said pipe relative to said clamping structure, said parallel movement control means including three rotatably mounted screws in said clamping structure having axes extending from points defining the vertices of an equilateral triangle in directions extending from the clamping structure parallel to and below the axis of a pipe held in the clamping structure, said welding mechanism having three fixed threaded nuts in positions to receive said screws; a central gear in said clamping structure and three outer gears at said points secured to said screws to rotatably mount the same, said three outer gears being in threaded engagement with said central gear so that rotating any one of the gears will rotate all the other gears to effect said guided back and forth movement;

(d) a horseshoe-shaped weld head supporting rotor mounted in said welding mechanism for rotational movement in its own plane over 360° about a pipe received therein;

(e) a link plate pivoted to one side of the horseshoe-shaped rotor;

(f) a welding torch head mounted on said link plate such that swinging movement of said link plate about its pivot moves said torch head in a generally normal direction further from and closer to the axis of said pipe;

(g) a first motor in said pipe clamping structure coupled to rotate one of said gears of said parallel movement control means and constituting a reversable motor so that by periodically reversing the direction of rotation of one gear, the welding mechanism is caused to oscillate towards and away from the clamping structure to thereby effect movement of the torch head back and forth across the weld path;

(h) a second motor on said welding mechanism for rotating said weld head support rotor; and

(i) a third motor carried on said weld head support rotor for swinging said link plate about its pivot point, whereby programmed operation of said first, second and third motors enables oscillating the torch head back and forth on either side of the weld path as a 360° weld path is followed about the pipe held in said clamping structure and wherein the torch head can be moved towards and away from the weld path as required for arc gap voltage control so that there is automatically provided a controlled high quality weld about the pipe.

4,372,475

ELECTRONIC ASSEMBLY PROCESS AND APPARATUS

Melvin L. Goforth, 7619 Hermosa, Amarillo, Tex. 79108, and Richard G. Russell, 6607 Roxton, Amarillo, Tex. 79109

Filed Apr. 29, 1981, Ser. No. 258,586

Int. Cl.³ H05K *3/34*

U.S. Cl. 228—170 **9 Claims**

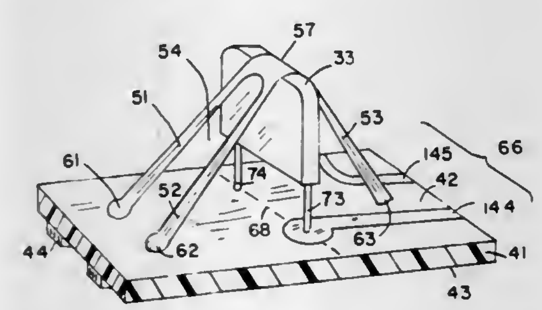

1. An electronic assembly process comprising a first stage wherein a solution of fabric forming material is formed and applied to a positioned array of electrical components on a printed circuit board, a second stage in which a component holding and positioning fabric is attached to said positioned array of electrical components on said printed circuit board, a third stage in which an array of external leads of said electrical components held by said fabric to said printed circuit board are soldered to portions of patterns of conductive elements on the surfaces of that printed circuit board, a fourth stage in which the assembly of component holding and positioning fabric and electrically connected components and printed circuit board is located in a body of fluid to dissolve said fabric, and a fifth stage in which stage the connected assembly of electric components and circuit board free of said fabric is removed from said fluid.

4,372,476

SELF-LOCKING TRAY WITH INTEGRAL DIVIDER

Frederich C. Harned, Martinez, and Scott M. Galloway, Augusta, both of Ga., assignors to The Continental Group, Inc., Stamford, Conn.

Filed Sep. 9, 1980, Ser. No. 185,476

Int. Cl.³ B65D *5/08*

U.S. Cl. 229—16 A **5 Claims**

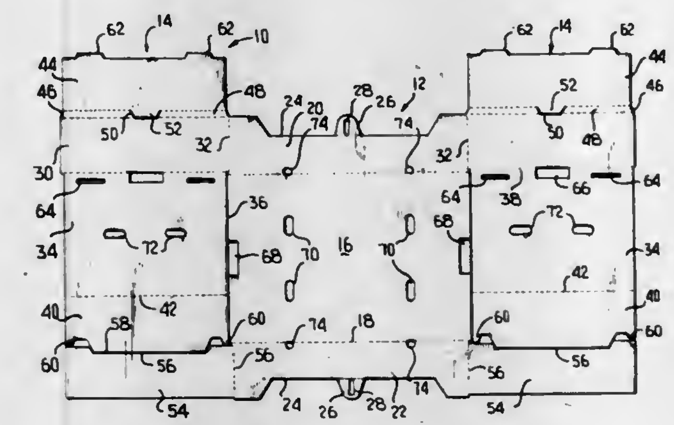

1. A blank for a tray, said blank comprising a central portion and end portions which are alike, said central portion including a base panel said having side panels along two opposite edges thereof, and said end portions each being free of said base panel and having parts joined to each of said side panels, each end portion including a bottom panel and a partition panel both directly alongside and coextensive with an end of said base panel.

4,372,477

CONTAINER

Richard Wytko, Olympia, Wash., assignor to Weyerhaeuser Company, Tacoma, Wash.

Continuation-in-part of Ser. No. 284,426, Jun. 20, 1981, abandoned. This application Jun. 1, 1982, Ser. No. 383,390

Int. Cl.³ B65D *5/10, 5/22*

U.S. Cl. 229—39 R **4 Claims**

2. A container comprising a first, second, third and fourth panels serially connected by score lines,

means for connecting said first and fourth panels,

two of said first, second, third and fourth panels being opposed side walls of the container,

the other two of said first, second, third and fourth panels being opposed front and back walls of the container,

a bottom closure extending along the lower edge of said first, second, third and fourth panels,

said bottom closure including opposed truncated panels extending from said opposed side walls and opposed rectangular panels extending from said front and back walls respectively, each said rectangular panel extending beyond the major axis of the container bottom and includes a converging recess at the midpoint of its outer free edge and a diagonal score line extending inwardly from said recess thereby forming a fold back section, said fold back sections adhesively secured to the adjacent truncated panel, said bottom panel being secured with the engagement of said recesses,

a front reinforcing panel hingedly attached to the upper edge of said front panel extending into said container in contact with the inner face of said front panel,

side reinforcing panels hinged to the upper edges of said side panels and extending downwardly into the container in contact with the inner face of said side panels, and

a back reinforcing panel hingedly attached to the upper edge of said back panel extending into said container in contact with the inner face of said back panel, and

bottom reinforcing panels hinged to the lower edges of said front, back and side reinforcing panels, each said bottom reinforcing panel being rectangularly shaped and of equal length and extending normal to respctive front, back and side reinforcing panels a distance such that opposed bottom reinforcing panels overlap each other.

4,372,478

FARE COLLECTION SYSTEM AND COMPONENTS THEREOF

Jim H. Gomez, Kankakee, and Jose E. Davila, Bourbonnais, both of Ill., assignors to General Railway Signal Company, Rochester, N.Y.

Division of Ser. No. 855,970, Nov. 30, 1977, Pat. No. 4,210,801. This application May 14, 1980, Ser. No. 149,145

Int. Cl.³ G07B *15/00*

U.S. Cl. 232—12 **11 Claims**

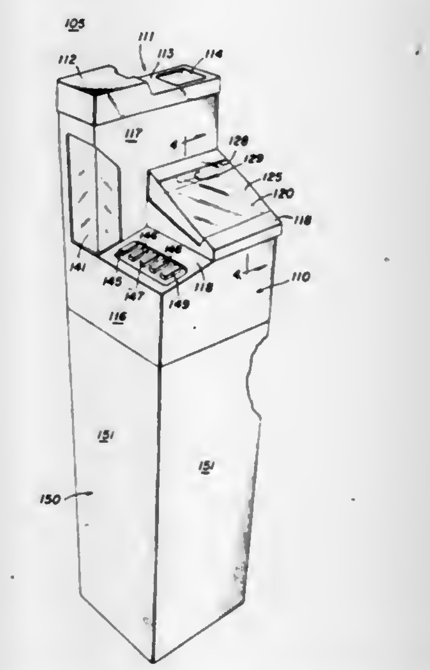

1. A fare box for use in a fare collection system having a central processing unit with an extractor conduit having one end in communication therewith and an extractor coupling on the other end thereof, said fare box comprising a pedestal open at the upper end and having a top closing the upper end, said pedestal having a coin collection chamber for receiving coins therein and a paper collection chamber for receiving paper therein, said top having a coin receiving slot therein communicating with said coin collection chamber and a paper receiving slot therein communicating with said paper collection chamber, coupling structure in said pedestal for cooperating with the extractor coupling to provide communication between said chambers and the central processing unit for conveying the contents of said chambers to said central processing unit, a gate operable in one position thereof to separate said coin collection chamber from said coupling structure and in another position thereof to permit passage of coins from said coin collection chamber to said coupling structure, and mechanism for shifting said gate from said one position to said other position upon the termination of the conveying of the contents from said paper collection chamber.

4,372,479

SELF-LOCKING COVERED COIN RECEPTACLE AND AUTOMATIC RESET MECHANISM THEREFOR

August M. Sciortino, 1838 Weeg Way, Park Ridge, Ill. 60068

Continuation-in-part of Ser. No. 136,889, Apr. 3, 1980, Pat. No. 4,359,184. This application Feb. 26, 1981, Ser. No. 238,617

Int. Cl.[3] **G07B** *15/00*

U.S. Cl. 232—15 **20 Claims**

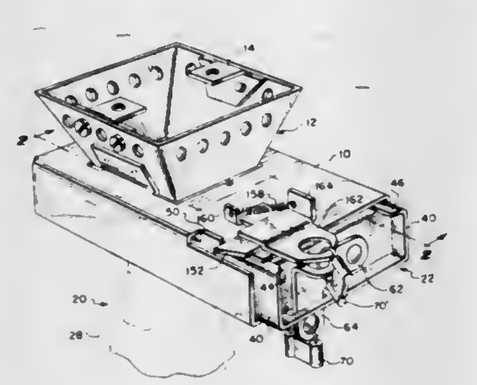

1. In a self-locking cover assembly for a coin receptacle mountable within a channeled bracket which is secured in communication with the coin delivery chute of a coin operated machine, the self-locking cover assembly including first and second channeled members telescopically engaged, the first channeled member having a window alignable with the delivery chute and a latch assembly, said first channeled member having slide means seated for slidable movement within the cover for selectively covering and uncovering the window, first spring means operable within the cover to bias the slide means in window covering condition and second spring means operably seated within the cover assembly selectively to block movement of the slide means whereby to prevent uncovering of the window when the covered receptacle is withdrawn from the channeled bracket, the invention comprising reset means automatically operable to release said second spring means subsequent to operation thereof for the purpose of preventing uncovering of the window, said reset means comprising cam means on one of the second spring means and first channeled member for displacing said second spring from a blocking condition blocking movement of said slide means and follower means on the other one of said second spring means and first channeled member interceptable by said cam means during withdrawal of said channeled members from their full telescopic engagement subsequent to withdrawal of the cover from the channeled bracket in locked condition.

4,372,480

TILT-OUT BOX FOR MAIL AND THE LIKE

Terry L. Mitchell, 6880 Belhurst, Jenison, Mich. 49428, and Robert L. Russell, 1193 48th, SE., Kentwood, Mich. 49508

Filed May 1, 1981, Ser. No. 259,677

Int. Cl.[3] **B65D** *91/00*

U.S. Cl. 232—28 **8 Claims**

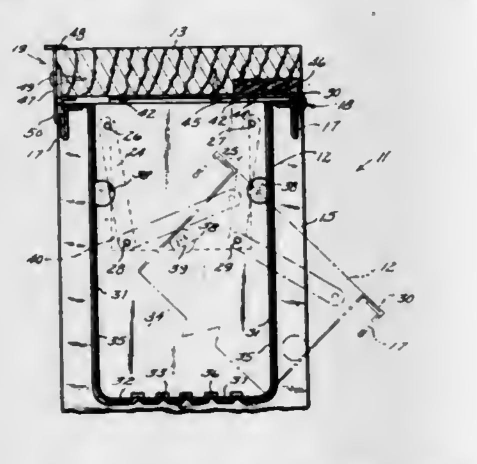

4. A tilt-out box structure for mail and the like for suspension between a pair of spaced-apart vertical supports and beneath a horizontal cover plate spanning the gap between said vertical supports comprising:

an elongate box having end plates closing each end of said box, said box being open at the top and including a front and rear downturned flange for the entire length of the box;

a pair of pivot arms at each end of said box and having pivot connecting means at each end, the upper ends of said pivot arms being pivotally connected to said box ends in spaced-apart relation and movable with movement of said box;

a mounting plate adjacent each end of said box having an upper connecting flange and pivotally attached to the lower ends of said pivot arms, said mounting plate having means for attaching in place; and

selectively operable latches one at the front of said box and one at the rear of said box for securing said box in position in respect to a support structure and selectively disengageable to open said box forwardly or rearwardly in a compound arcuate and tilting path determined by said pivot arms.

4,372,481

MAILBOX MARKING ATTACHMENT

Ronald K. Benson, Rte. #2, Montague, Mich. 49437

Filed Nov. 23, 1979, Ser. No. 96,903

Int. Cl.[3] **B65B** *91/00*

U.S. Cl. 232—34 **3 Claims**

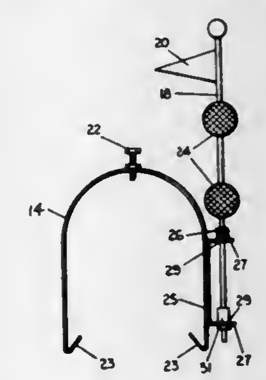

1. An auxiliary mailbox marking attaching for attachment to a mail receptacle having a top, sides, and a bottom, the mailbox marking attachment comprising:

a mounting member that fits transversely over the exterior top and sides of the mail receptacle, with a lower portion of the mounting member extending inwardly at least partially beneath the mail receptacle, the mounting member comprising a strap device that fits over and generally conforms in shape to the exterior of the mail receptacle, the strap having inwardly angled lower ends that fit under lower edges of the mail receptacle;

tightening means for tightening the strap device so it is held tightly in position on the mail receptacle;

flagpole mounting means attached to the side of the strap device for releasably attaching a flagpole to the mailbox, the flagpole mounting means comprising a bracket having a back attached to the strap and vertically spaced upper and lower tabs extending outwardly from upper and lower ends of the back, respectively, the tabs having aligned vertical openings therein; and

a flagpole releasably mounted in the flagpole mounting means, the flagpole extending downwardly through the opening in the upper tab and being releasably attached to a connector that is in turn releasably fixed to the lower tab by means of a threaded fastener that extends through the opening in the lower tab, the flagpole having a removed section therein above the upper tab, with a spring connecting the portions of the flagpole on each side of the removed section, the spring permitting the portion of the flagpole above the spring to be resiliently deflected downwardly with respect to the portion of the flagpole below the spring, the lower portion of the flagpole being held in a fixed position by the flagpole mounting means.

4,372,482

INSTALLATION FOR SIGNALLING DEPOSIT OF MAIL IN A LETTER BOX

Jack J. V. Clerigues, 21, rue Bourdaloue, Nimes (Gard), France

Filed Jun. 16, 1981, Ser. No. 274,138

Claims priority, application France, Jun. 19, 1980, 80 13639

Int. Cl.[3] **B65D** *91/00*

U.S. Cl. 232—36 **6 Claims**

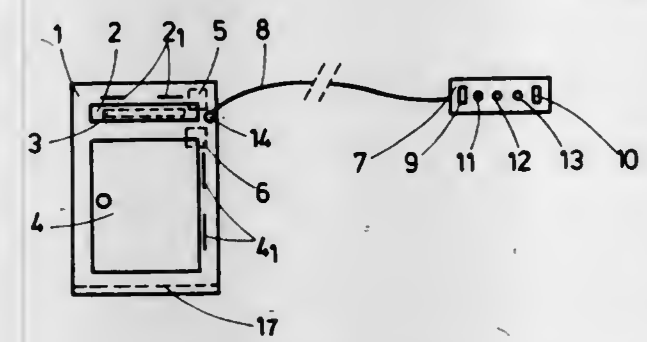

1. An installation for signalling the deposit of mail in a letter box (1), said letter box comprising a movable shutter member (2) in front of a mail insertion slot (3) and an access door (4) for removal of the deposited mail, characterised in that the shutter member and the door are each connected to an electrical switch means (5, 6) arranged to be actuated respectively when the shutter member is raised and when the door is opened, the switch means (6) associated with the door being disposed in the supply circuit of a relay having a first and a second switch, the first switch being disposed in a self-supply circuit of the relay in series with the switch means associated with the door, and the second switch being disposed in series in the supply circuit of a signalling means (11).

4,372,483

FLUID CONTAINMENT ANNULUS FOR FIXED ANGLE ROTORS

Herschel E. Wright, Santa Clara, Calif., assignor to Beckman Instruments, Inc., Fullerton, Calif.

Filed May 29, 1981, Ser. No. 268,540

Int. Cl.[3] **B04B** *7/02, 7/08*

U.S. Cl. 494—16 **4 Claims**

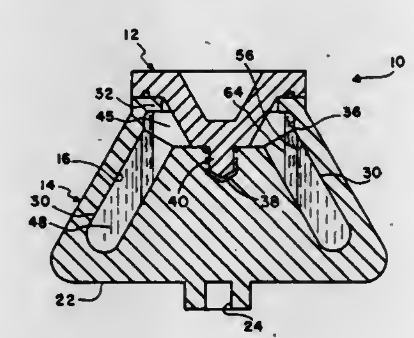

1. A centrifuge rotor comprising:

a lower rotor portion with an upper open end;

means within said lower rotor portion for receiving and supporting a plurality of centrifuge tubes at a fixed angle with respect to the spin axis of said rotor, said receiving and supporting means designed to contain a specified amount of a fluid sample in said each of said tubes;

means for forming an enclosed area around the perimeter of said open end of said lower rotor portion, said enclosed area forming means capturing any of said fluid sample from said tubes which is in excess of said specified amount during centrifugation; and

a lid for covering said open end of said lower rotor portion, said enclosed area forming means being positioned adjacent said lid in such a manner that none of said fluid sample in excess of said specified amounts being retained in said area contacts said lid during centrifugation.

4,372,484

DEVICE FOR THE SEPARATION OF A LIQUID, ESPECIALLY WHOLE BLOOD

Lars-Ake L. Larsson, Loddekopinge, Sweden; Claes-Ake Gullberg, Hechingen, Fed. Rep. of Germany; Kaj Stenberg, Staffanstorp, and Nils G. E. Boberg, Lund, both of Sweden, assignors to Gambro AB, Sweden

PCT No. PCT/SE79/00128, § 371 Date Feb. 4, 1981, § 102(e) Date Feb. 4, 1981, PCT Pub. No. WO80/02653, PCT Pub. Date Dec. 11, 1980

PCT Filed Jun. 6, 1979, Ser. No. 232,024

Int. Cl.[3] **B04B** *11/00*

U.S. Cl. 494—14 **23 Claims**

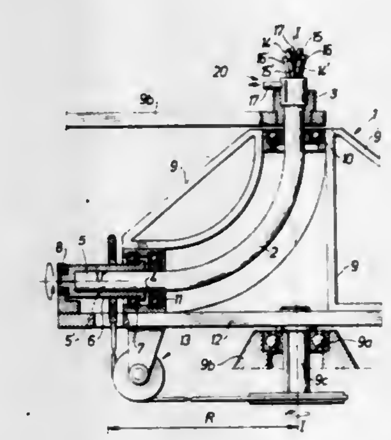

1. Apparatus for separating a liquid, such as whole blood, into fractions having different densities, comprising

separating means for separating the liquid into its fractions, said separating means including a separation chamber;

transferring means in fluid communication with said separation chamber of said separating means for transferring the liquid to said separation chamber and for individually transferring the liquid fractions from said separation chamber, said transferring means including supplying means for supplying the liquid to said separation chamber, first discharging means separate and distinct from said supplying means for discharging a first liquid fraction from said separation chamber, and second discharging means separate and distinct from said supplying means and said first discharging means for discharging a second liquid fraction from said separation chamber, whereby the first and second liquid fraction may be individually discharged from said separation chamber by said first and second discharging means, respectively, said transferring means further including a first end which is stationary and a second end which is rotatable in a circular path around and at a distance from a first axis passing through said first end of said transferring means, said second end of said transferring means being fixedly connected to said separating means, whereby said separating means is rotatable conjointly with said second end of said transferring means about said first axis and about a second axis which is coincident with a medial longitudinal axis of said second end of said transferring means; and

rotating means for conjointly rotating said separating means and said second end of said transferring means about said first axis and for conjointly rotating said separating means and said second end of said transferring means about said second axis so as to prevent said transferring means from twisting as a result of its rotation about said first axis.

4,372,485
THERMALLY ACTIVATED, AUTOMATIC DAMPER AND DAMPER OPERATOR
Francis J. McCabe, 239 Hastings Ct., Doylestown, Pa. 18901
Filed Dec. 1, 1980, Ser. No. 211,914
Int. Cl.^{3} G05D *23/00*; F23L *5/00*
U.S. Cl. 236—1 G **15 Claims**

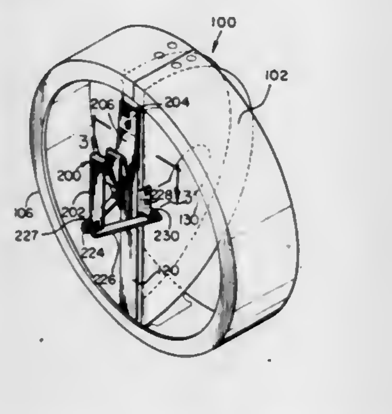

1. For a damper having a frame and at least one reciprocal blade operatively associated therewith, an improved damper operator comprising:
 a. a bimetallic element, a portion of which is fixedly connected to the frame; and
 b. a link bar, pivotally connected to and between other portions of the bimetallic element and face portions of the blade of the damper;
so that reciprocating movement of the bimetallic element causes the blade to move within the damper frame.

4,372,486
REVERSIBLE EXPANSION VALVE
Soichiro Tomioka, and Yasuo Komiya, both of Iruma, Japan, assignors to Kabushiki Kaisha Saginomiya Seisakusho, Japan
Filed Apr. 22, 1981, Ser. No. 256,553
Claims priority, application Japan, Apr. 25, 1980, 55-55920[U]
Int. Cl.^{3} F25B *41/04*
U.S. Cl. 236—92 B **7 Claims**

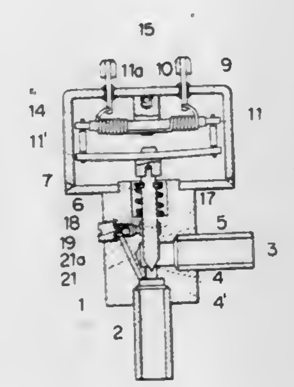

1. A reversible expansion valve comprising
a valve body formed with a primary port, a secondary port, a valve seat defined between the primary and secondary ports, and a slide bore in an opposing relation to said valve seat;
a valve needle inserted through said slide bore and adapted to engage the valve seat;
a control chamber accommodating a control means therein to regulate the valve needle; and
means for protecting against fluid leakage into said control chamber, comprising a communication passage provided between said primary port and said slide bore and having a check valve therein.

4,372,487
HIGH PRESSURE OIL/GAS FIRED CLOSED LOOP FURNACE
Charles W. Hollister, 32 Wiltshire La., West Hartford, Conn. 06117
Filed Nov. 26, 1980, Ser. No. 211,329
Int. Cl.^{3} F24D *3/00*
U.S. Cl. 237—56 **6 Claims**

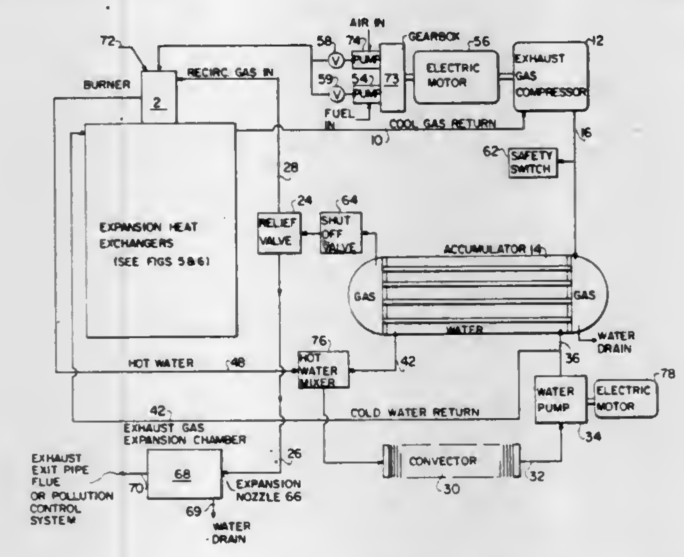

1. Furnace structures having smoke and gas return, comprising:
(a) combustion chamber means generating combustion gases containing heat of combustion;
(b) heat exchanger means surrounding said combustion chamber means and directing said combustion gases away from said combustion chamber means;
(c) convector means for delivering heat to the inside of a dwelling;
(d) means for circulating heat transfer medium parallel to and contiguous with said heat exchanger means counter-current to said combustion gases, transferring said heat of combustion and delivering said heat of combustion to said convector means including a first pump;
(e) means for recirculating a first portion of said combustion gases from said heat exchanger means to said combustion chamber means including a second pump compressing and circulating said combustion gases and a second portion of said combustion gases as waste product;
(f) means for accumulating said combustion gases from said heat exchanger means and means for circulating said heat transfer medium through said means for accumulating; and
(g) said means for recirculating including a relief valve connecting a first conduit to said combustion chamber and a second conduit to waste product.

4,372,488
LEVEL CROSSING FOR RAILROADS AND METHOD OF FABRICATING THE SAME
Karl Schönthaler, Bad Ischl, and Gerhard Hartl, Vienna, both of Austria, assignors to Semperit Aktiengesellschaft, Vienna, Austria
Filed Mar. 20, 1975, Ser. No. 560,500
Claims priority, application Switzerland, Mar. 20, 1974, 3887/74
The portion of the term of this patent subsequent to Feb. 8, 1999, has been disclaimed.
Int. Cl.^{3} E01C *9/04*
U.S. Cl. 238—8 **10 Claims**

3. A level crossing for a railroad having a pair of rails defining a track, comprising a roadway body located adjacent the rails, outer plates arranged between the rails and the roadway body, profiled closure means provided for the roadway body, the outer plates being supported at one side at the rails and at the other side at the profiled closure means, elastic molded body means at the profiled closure means of the roadway body for providing positive support of the outer plates, said profiled closure means including at least one profile element, the outer plates being provided with adjustment screw means at the region of the profile element for changing the position of the outer plates, a groove having vertical walls formed in said

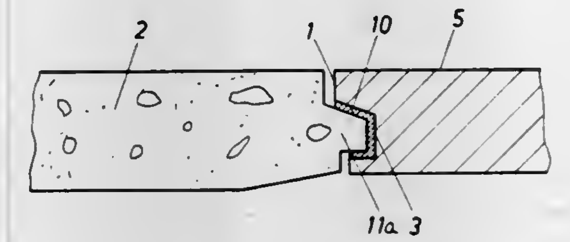

profile element, at least one metallic plate arranged between the adjustment screw means and said elastic molded body means, said metallic plate and said elastic molded body means being located in said groove, and an elastic band arranged between the vertical walls of said groove and said elastic molded body means.

4,372,489
ELECTRICAL TOY VEHICLE TRACKS
Cheuk-Ming Lee, Hong Kong, Hong Kong, assignor to The Refined Industry Company Limited, Hong Kong, Hong Kong
Filed Aug. 1, 1980, Ser. No. 174,337
Claims priority, application United Kingdom, Aug. 8, 1979, 7927609
Int. Cl.^{3} A63H *18/12, 19/30*; E01B *23/00*
U.S. Cl. 238—10 F **11 Claims**

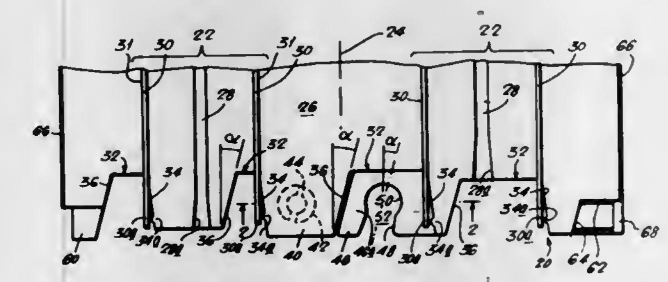

1. A toy vehicle track section capable of being joined to the end of a like track section to assemble a vehicle track, said section comprising:
means forming at least one defined path for a vehicle including at last two electrically-conducting strips from which a vehicle obtains electrical power,
said strips being substantially straight throughout their lengths and extending from end to end of said section substantially parallel to one another and to the longitudinal axis of said section, an individual tapered recess adjacent the end of each said electrical strip, respectively, at each end of said section, said end of each strip terminating in its said individual recess so that each recess houses an end of a respective strip, each recess tapering width-wise of said section in a direction away from the respective end of said section, each recess being defined by an abutment wall adjacent the end of the respective strip and a cam wall inclined relative to the longitudinal axis of said section, said cam wall being adapated for engaging a corresponding cam wall on the end of another, adjacent section when the sections are brought together to cause the ends of the strips adjacent to the cam walls of the two sections to be moved into side by side engagement with each other between said respective pair of abutment walls, the ends of said strips of the two sections being substantially straight when the sections are brought together, and
snap-fitting retaining means at each end, respectively of said section, for releaseably connecting the section with an adjacent section, said snap-fitting means comprising means defining an open ended mouth having a restricted opening and a lug extending transversely of the path, said lug being capable of entering the mouth of an adjacent section through the opening of the mouth when the sections are brought together and being releasably held in said mouth after the sections have been brought together, one of said defining means and said lug being resilient, the longitudinal axis of said mouth and thereby the direction in which said lug of said section enters and leaves said mouth of the adjacent section being generally parallel to said cam wall of said section.

4,372,490
PULL PAD CONCENTRATED AIR DEODORIZER
Robert A. Le Caire, Jr., Appleton, and David W. Wendt, Madison, both of Wis., assignors to The Coca-Cola Company, Atlanta, Ga.
Filed Nov. 20, 1980, Ser. No. 208,574
Int. Cl.^{3} A61L *9/00*
U.S. Cl. 239—59 **39 Claims**

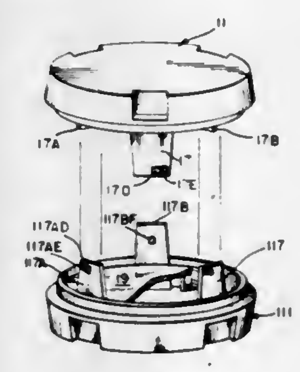

1. A container for a deodorant having first and second housing sections which are telescopically joined together for reciprocal movement with respect to each other between a fully open position and a closed position, air passages being defined between said housing sections in the container open position, said air passages extending into the interior of said container and said air passages being sealed off in the container closed position, the improvement comprising:
index means for varying the size of said air passages in response to reciprocal movement of said housing sections with respect to each other; and
locking means for locking said housing sections in said closed position in response to rotation of said housing sections with respect to each other;
said index means including a plurality of outwardly projecting engaging legs extending from said first housing section and said second housing section.

4,372,491
FUEL-FEED SYSTEM
Semyon I. Fishgal, 1908-35 High Park Ave., Toronto, M6P 2R6, Canada
Filed Feb. 26, 1979, Ser. No. 14,848
Int. Cl.^{3} B05B *3/14*
U.S. Cl. 239—102 **2 Claims**

1. A fuel-feed system for engines, gas turbines, burners and the like, including a fuel-pressure source communicated with a reservour means and a flow-line filtration system comprising a housing having a fuel inlet port and a fuel outlet port, a porous piezoelectric ceramic filtering element having working surfaces thereon and located in the housing in the flow path of the fuel, partitioning the housing into an input part and an output part, a metallic coating on said working surfaces, and a generator of electric oscillations connected to said metallic coating

whereby foreign matter in the fuel is removed by the filter and vibration of the filter effected by the generator of electric

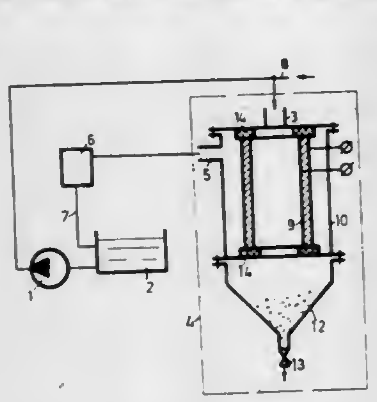

oscillations prevents clogging of the filter and emulsifies the fuel.

4,372,492
SPRAYER BOOM STRUCTURE
Richard A. Blumenshine, Blue Springs, Mo., assignor to Lely Independence Mfg., Inc., Independence, Mo.
Filed Feb. 19, 1981, Ser. No. 235,983
Int. Cl.³ A01C *3/04*
U.S. Cl. 239—168 **9 Claims**

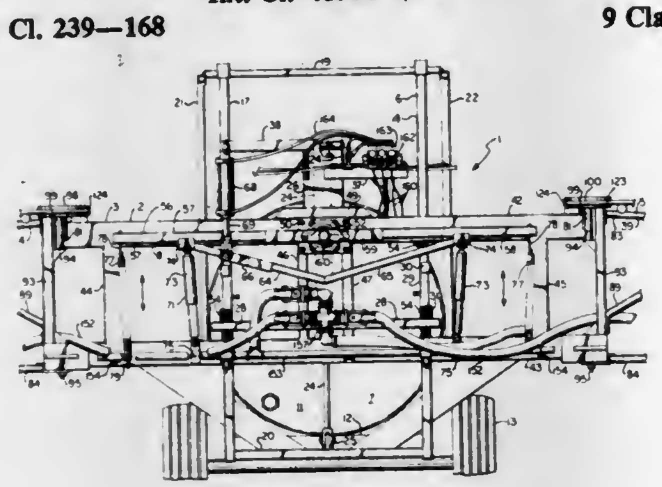

1. A spray boom assembly comprising:
(a) an inner frame adapted for mounting to a transport vehicle;
(b) an elongate spray boom having a center portion and opposite ends, said center portion being mounted to said frame in facing relationship;
(c) a pivot means connected to and extending through said inner frame and said center portion and permitting up and down swinging movement of said spray boom about said pivot means in response to movement of said vehicle;
(d) a biasing frame facing said inner frame and said center portion and affixed to said pivot means for rotation thereabout;
(e) means extending between said inner frame and said biasing frame and positioning said biasing frame at a rotational attitude relative thereto; and
(f) shock absorber means connected to and extending between said spray boom center portion and said biasing frame for absorbing rotational transients and limiting rotation of said spray boom about said pivot means.

4,372,493
ROOF COOLING SYSTEM
Jimmie L. Smith, 1812 Boulder, Plano, Tex. 75023
Continuation-in-part of Ser. No. 124,813, Feb. 26, 1980, abandoned. This application Dec. 24, 1980, Ser. No. 219,932
Int. Cl.³ B05B *15/00*
U.S. Cl. 239—208 **16 Claims**

1. Water sprinkler apparatus for distributing water over the surface of a roof comprising:
elongated water supply conduit means adapted to be supported on a roof,
a plurality of flexible tubes each having a first end nonrotatably attached to an upper surface of said conduit means at spaced apart intervals along said conduit means and in fluid communication with said conduit means, said tubes being of a flexible material and of a length such that when water is not being forcibly discharged through said tubes said tubes hang with a second end pointing generally downward, and the pressure of water discharged from

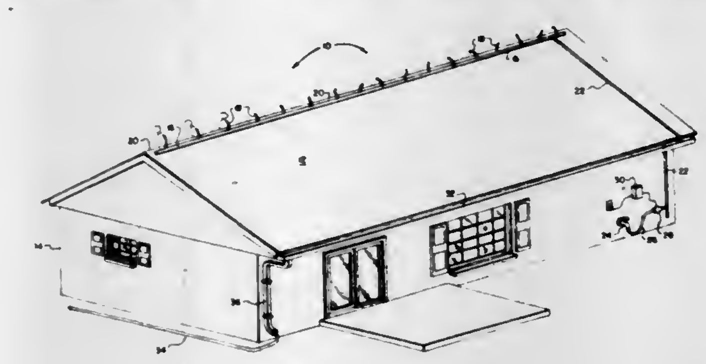

said tubes is sufficient to raise the second end of said tubes to a point wherein water is discharged from said tubes in a generally horizontal direction over said roof; and
a directional nozzle attached to said second end of each of said tubes for receiving fluid from said tube, said nozzle having an outlet angularly displaced from the longitudinal axis of said second end of said tube in such a way as to provide random movement of said second end without forced rotation of said tube about its own longitudinal axis when water is being discharged from said tube through said nozzle.

4,372,494
SPRAY NOZZLE
Christian Naturel, Pacy, and Etienne Minot, Saint Andre, both of France, assignors to Carbonisation Entreprise et Ceramique (C.E.C.), Montrouge, France
Filed Feb. 19, 1981, Ser. No. 235,939
Claims priority, application France, Feb. 28, 1980, 80 04438
Int. Cl.³ B05B *1/14*
U.S. Cl. 239—553.3 **11 Claims**

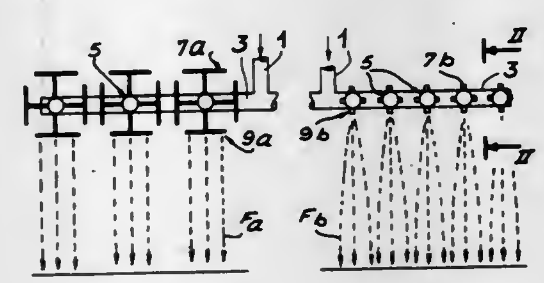

1. A spray nozzle for the spraying of liquid, comprising:
a nozzle body provided with a cylindrical chamber of given diameter permitting passage of a liquid into a nozzle and at a nozzle liquid outlet a plurality of equidistantly spaced, identical holes, whose axes are inclined relative to a nozzle axis:
a calibrated alumina member positioned at the intake of the liquid into the nozzle defining a passage for the liquid outflow, having a diameter less than the diameter of the chamber, said member having a concave face at the inlet and a constriction of said passage to limit liquid flow entering the nozzle, the liquid flowing directly from the constriction to said holes through at least a portion of the cylindrical chamber; and
fixing means securing said member to the nozzle body.

4,372,495
PROCESS AND APPARATUS FOR COMMINUTING USING ABRASIVE DISCS IN A DISC REFINER
Renata Marton, Syracuse, and Alton F. Brown, Cazenovia, both of N.Y., assignors to The Research Foundation of State University of New York, Albany, N.Y.
Filed Apr. 28, 1980, Ser. No. 144,019
Int. Cl.³ B02C *7/12*
U.S. Cl. 241—28 **28 Claims**

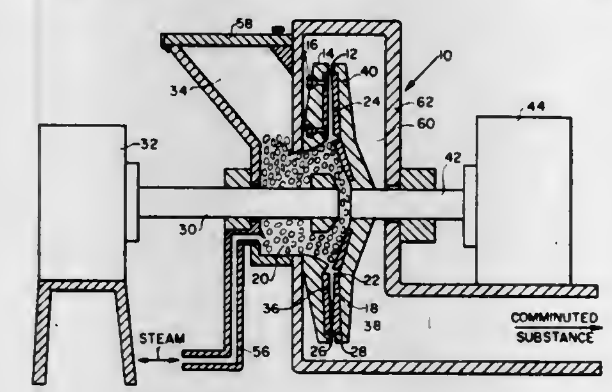

1. A mechanical comminuting plate for use as a part of a mechanical comminuting disc, said plate comprising a truncated circular sector having a disintegrating surface, said surface being divided by an arc of the circle of the sector into adjacent inside and outside surfaces, the inside surface of which is provided with a series of integral breaker bars each of which has a longitudinal axis essentially parallel with the nearest diameter of the circle of the sector and said outside surface comprising an abrasive having an average particle size of between about 140 micrometers and ¼ centimeter.

4,372,496
ELECTRONIC CONTROLLER OF HYDRAULIC PRESSURE FOR JOURNAL LOADING OF BOWL MILL
Theodore V. Maliszewski, North Canton, Conn., assignor to Combustion Engineering, Inc., Windsor, Conn.
Filed Oct. 1, 1980, Ser. No. 192,774
Int. Cl.³ B02C *4/32*
U.S. Cl. 241—37 **10 Claims**

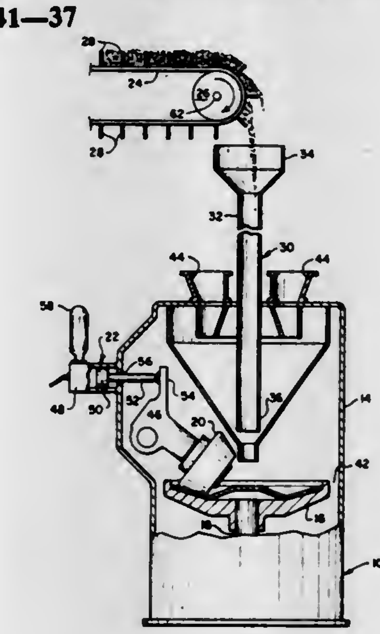

1. In the combination of a bowl mill operative for pulverizing coal therewithin and a belt feeder means operative for feeding coal to the bowl mill, said bowl mill including a separator body, a grinding table supported on a shaft for rotation within the separator body, at least one grinding roll supported within the separator body so as to be operable to exert a grinding force on the coal disposed on the grinding table for purposes of effecting the pulverization thereof, and a hydraulic fluid means cooperatively associated with the grinding roll and operative for purposes of establishing the hydraulic journal loading on the grinding roll that enables the grinding roll to apply grinding force to the coal on the grinding table, the improvement comprising an electronic controller for effecting control over the hydraulic journal loading applied to the grinding roll in accordance with the rate at which coal is fed to the bowl mill by the belt feeder means, said electronic controller comprising:
(a) first means cooperatively associated with the belt means and operative for deriving an electronic signal therefrom corresponding to the rate at which coal is being fed to the bowl mill by the belt feeder means;
(b) second means cooperatively associated with the hydraulic fluid means and operative for deriving a signal corresponding to the hydraulic pressure present in the hydraulic fluid means;
(c) a controller station having a pre-established bank of data stored therein corresponding to the optimum amount of grinding force that the grinding roll should exert for different rates of feed by the belt feeder means of coal to the bowl mill, said controller station being connected in circuit relation with said first means for receiving in the form of a first input the electrical signal derived by said first means, said controller station further being connected in circuit relation with said second means for receiving in the form of a second input the signal derived by said second means, said controller station being operative to compare the information received by said controller station in the form of the first and second inputs with the pre-established bank of data stored in said controller station, said controller station being operative based on this comparison to selectively produce an increase pressure output signal or a decrease pressure output signal or no output signal as required in order to cause the grinding roll to exert the optimum amount of grinding force for the particular rate of feed at which the belt feeder means is sensed to be feeding the coal to the bowl mill;
(d) hydraulic fluid supply means connected in fluid flow relation with the hydraulic fluid means, said hydraulic fluid supply means further being connected in circuit relation with said controller station;
(e) third means interconnecting said controller station with said hydraulic fluid supply means and operative for transmitting the increase pressure output signal produced by said controller station to said hydraulic fluid supply means to cause said hydraulic fluid supply means to supply hydraulic fluid therefrom to the hydraulic fluid means to cause the hydraulic pressure in the hydraulic fluid means to increase for purposes of effecting a concomitant increase in the grinding force exerted by the grinding roll such that the grinding force being exerted by the grinding roll represents the optimum grinding force for that particular rate of feed at which the belt feeder means is sensed to be feeding the coal to the bowl mill; and
(f) fourth means interconnecting said controller station with said hydraulic fluid supply means and operative for transmitting the decrease pressure output signal produced by said controller station to said hydraulic fluid supply means to cause said hydraulic fluid supply means to receive hydraulic fluid from the hydraulic fluid means to cause the hydraulic pressure in the hydraulic fluid means to decrease for purposes of effecting a concomitant decrease in the grinding force exerted by the grinding roll such that the grinding force being exerted by the grinding roll represents the optimum grinding force for that particular rate of feed at which the belt feeder means is sensed to be feeding the coal to the bowl mill.

4,372,497

METHOD OF MANUFACTURING WOUND ITEMS FROM COAXIAL MICROWIRE AND DEVICE THEREFOR

Sergei N. Dimitraki, and Lolita S. Dimitraki, both of ulitsa Bubnovskogo, 5/5, kv. 118, Kishinev, U.S.S.R.

PCT No. PCT/SU80/00001, § 371 Date Sep. 8, 1980, § 102(e) Date Sep. 3, 1980, PCT Pub. No. WO80/01431, PCT Pub. Date Jul. 10, 1980

PCT Filed Jan. 8, 1980, Ser. No. 205,445

Claims priority, application U.S.S.R., Jan. 8, 1979, 2700551; Jan. 8, 1979, 2700552

Int. Cl.³ H01F *41/04;* **H01C** *17/22*

U.S. Cl. 242—7.03 **4 Claims**

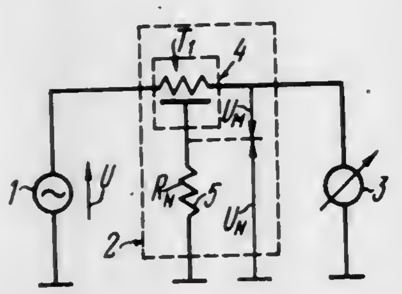

1. A method of manufacturing wound items from coaxial microwire comprising the steps of unwinding microwire from an item being manufactured with continuous measurements of an electrical parameter of the unwound wire; stopping the microwire unwinding process as the electrical parameter of the unwound wire reaches a predetermined value; inserting said item being manufactured in an electrical circuit including a voltage source determining a voltage frequency f_1 at which a phase shift between a current vector in a coaxial sheath of a microwire of the item being manufactured whose electrical parameter exceeds the rating and voltage vector between the coaxial sheath and conductor of the microwire equals 180°; setting voltage frequency f_2 at which a phase shift between the current vector in the coaxial sheath of the microwire of the item being manufactured whose electrical parameter fully complies with the corresponding rating and the voltage vector between the coaxial sheath and conductor of the microwire is 180°; converting voltages at the frequencies f_1 and f_2 into voltage at the frequency f_X, where

$$f_X = \frac{f_2 \cdot f_1}{f_2 - f_1};$$

applying the voltage at the frequency f_X to the coaxial sheath of the microwire of the item being manufactured; and again unwinding the microwire with the current vector phase in the coaxial sheath of the unwound wire being continuously compared with the voltage vector phase between the conductor of said microwire and its coaxial sheath, the unwinding of the microwire from the item being manufactured being continued until the electrical parameter of the item being manufactured reaches the preset rating, a condition corresponding to a 180° difference between the compared phases in the unwound wire.

3. A device for manufacturing wound items from coaxial microwire comprising a take up mechanism taking up wire unwound from an item being manufactured and having electrical contacts; a securing mechanism securing the item being manufactured and having a sliding contact; an electrode providing coupling between the microwire and an electrical circuit and disposed between the microwire take up mechanism and the securing mechanism; a microwire rewind drive kinematically coupled to the microwire take up mechanism and to the securing mechanism; a control unit controlling the microwire rewind drive and having an output connected to the microwire rewind drive; an amplifier and converter unit transmitting a converted signal conveying information on parameters of the item being manufactured to the microwire rewind drive control unit; a first harmonic generator; a second harmonic generator; a switch with first, second, third and fourth contact sets; a frequency changer having a first input connected to a potential output of the second harmonic generator and a second input coupled to a potential output of the first harmonic generator through a second fixed contact and a moving contact of the first contact set of the switch; wherein the moving contact of the first contact set of the switch is connected to a first fixed contact of the second contact set of the switch, a moving contact of the second contact set of the switch is connected to an electrical contact of said takeup mechanism having galvanic coupling with one of the ends of the conductor of the microwire of the item being manufactured, an output of the frequency changer is connected to a second fixed contact of the third contact set of the switch, a moving contact of the third contact set is connected to the sliding contact of the securing mechanism; further comprising an indicator having a potential input connected to a first fixed contact of the third contact set of the switch; a resistance box having a first pole connected to a moving contact of the fourth contact set of the switch being connected to a flexible current lead of the item being manufactured; a current-to-voltage converter having a potential input connected to an electrical contact of the microwire takeup mechanism; an amplifier and converter unit having inputs connected to an output of said current-to-voltage converter, and a second input connected to a second fixed contact of the second contact set of the switch; wherein a second input of the indicator, a second output of the second harmonic generator, a second pole of the resistance box, a case of the frequency changer, a second input of the current-to-voltage converter, a second output of the first generator, and an electrode are connected to a neutral wire of the device.

4,372,498

DEVICE FOR FORMING STORE UNITS FROM A THREAD SUPPLIED FROM A YARN PACKET

Hubert P. Van Mullekom, Deurne, Netherlands, assignor to Ruti-Te Strake B.V., Deurne, Netherlands

Filed Oct. 22, 1980, Ser. No. 199,579

Claims priority, application Netherlands, Nov. 27, 1979, 7908595

Int. Cl.³ B65H *51/20*

U.S. Cl. 242—47.01 **3 Claims**

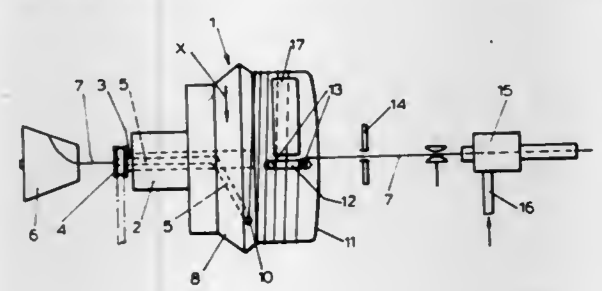

1. A device for forming store units from a thread supply, comprising, in combination, a stationary winding means defining a circumferential winding surface, a longitudinal slot in said surface, a thread guide rotatably mounted adjacent to one end of said surface for winding the thread on said surface, a plurality of pins which are movable in succession in an endless path in the radial plane of said slot, first radially outward to protrude through the portion of said slot adjacent to said one end of said surface, then forward along said slot, and then radially inward to retract into said slot, thereby separating the thread windings on said surface into successive store units, each store unit comprising a plurality of thread windings, and thread transporting means for drawing each store unit forward off said surface as it is released by retraction of a pin, wherein the improvement comprises brake means which is movable into braking contact with the trailing portion of each store unit of thread as withdrawal of such store unit from said surface is completed.

4,372,499

PROCESS AND APPARATUS FOR PREPARING FABRIC PATTERNS

Peter Büchinger, Bergli, 9630 Wattwil, Switzerland

Filed Apr. 21, 1980, Ser. No. 141,901

Claims priority, application Switzerland, Oct. 15, 1979, 9262/79

Int. Cl.³ B65H *54/68*

U.S. Cl. 242—50 **11 Claims**

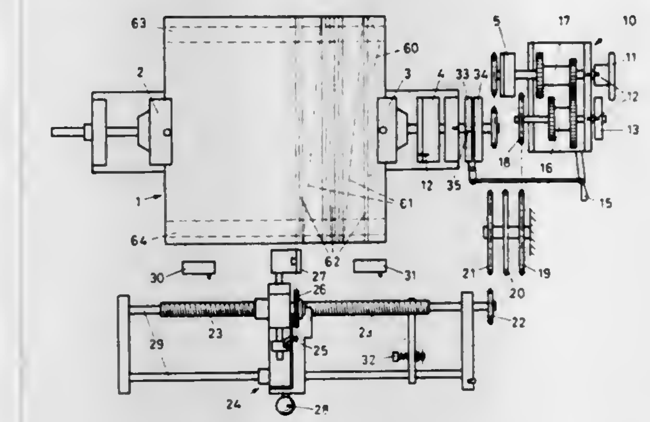

1. In a process of preparing a fabric pattern by winding a plurality of yarns of various colors in a pattern about a rectangular card having front and rear sides, said pattern having at least one repetitive color with at least one different color interposed between repetitions, the improvement comprising the consecutive steps of winding a first yarn of a first selected color about said card at all points corresponding to said first color in said fabric pattern before a yarn of another color is wound about said card, and winding a second yarn of a second selected color about said card at all points corresponding to said second color in said fabric pattern.

4,372,500

INSERTS FOR USE WITH WEB DISPENSING MEANS

Alfred Saraisky, 27 Cayuga Ave., Oakland, N.J. 07436

Filed Feb. 18, 1981, Ser. No. 235,669

Int. Cl.³ B65H *79/02*

U.S. Cl. 242—55 **18 Claims**

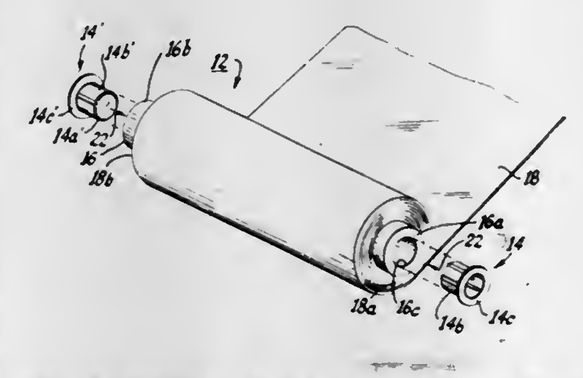

1. An insert arranged to be held by the hand of an operator for use in dispensing a web from a supply roll, said web being a web of wrapping film wrapped about a core comprising a hollow cylinder, said insert comprising:

a substantially cylindrical side wall having a first and second end and tapering slightly from said second end towards said first end so that said second end is wider than said first end, the hollow interior of said side wall being of a depth sufficient to receive the fingers of the operator when in use;

an end surface integral with said first end for substantially closing said side wall at said first end;

a substantially flat annular shaped flange having its inner periphery integrally joined to the second end of said side wall, which second end is open;

said insert being inserted into at least one end of said cylinder with said flange overlying at least the adjacent end of said cylinder, said insert being formed of a plastic material having a low coefficient of sliding friction, the surface of said insert engaging said cylinder being smooth, whereby said insert is freely slidable relative to said cylinder; the thickness of the insert being selected to significantly reduce the weight of the insert and enable the insert to be quite yieldable to facilitate insertion into the cylinder.

4,372,501

SEATBELT RETRACTOR

Mitsuo Inukai, Aichi, Japan, assignor to Toyota Jidosha Kogyo Kabushiki Kaisha, Aichi, Japan

Filed Jan. 13, 1981, Ser. No. 224,699

Claims priority, application Japan, Jan. 16, 1980, 55-3153[U]

Int. Cl.³ A62B *35/02;* **B05H** *75/48*

U.S. Cl. 242—107 **8 Claims**

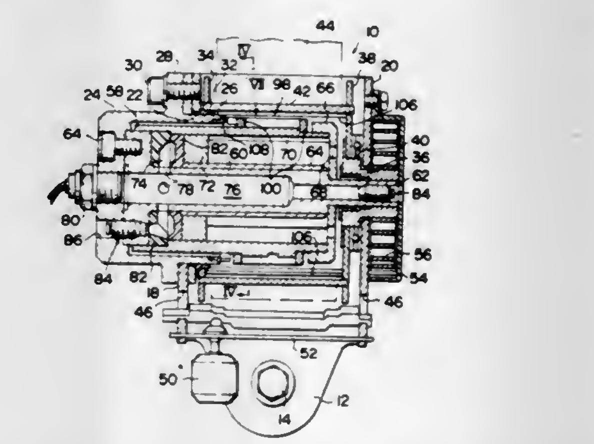

1. A seatbelt retractor for use in a seatbelt system for protecting an occupant in an emergency of a vehicle, comprising:

(a) a frame secured to a vehicle body;

(b) a takeup shaft pivotally supported on said frame for winding up an occupant restraining webbing, said takeup shaft being provided on the inner periphery thereof with a ratchet wheel;

(c) a drum pivotally supported on said frame and rotatable by expansion of a pressure chamber provided therein;

(d) a clutch mechanism for imparting a turning force of said drum, when said drum rotates, to said takeup shaft as a webbing windup turning force;

(e) a powder unit provided in communication with said pressure chamber of the drum for imparting an explosive pressure to said pressure chamber to rotate said drum in an emergency of the vehicle, said powder unit secured to and in a position facing said powder chamber;

(f) a control valve provided in communication with said pressure chamber of the drum for releasing a high pressure to atmosphere when the pressure in the pressure chamber exceeds a predetermined value, whereby the pressure in the pressure chamber is maintained to less than the predetermined value to restrict a webbing takeup force of said takeup shaft to be applied to the occupant;

(g) a drum support shaft solidly secured to the frame;

(h) a powder chamber provided in said drum support shaft, a through-hole extending through a core portion of the drum support shaft constituting said powder chamber, said powder chamber communicating with said pressure chamber.

4,372,502

ADJUSTABLE THREAD TENSIONING DEVICE FOR A SEWING MACHINE

Robert H. Larsen, Middletown, N.J., and Anthony Giaimo, Staten Island, N.Y., assignors to The Singer Company, Stamford, Conn.

Filed Mar. 23, 1981, Ser. No. 246,531

Int. Cl.³ D05B *47/02;* **B65H** *59/22*

U.S. Cl. 242—149 **6 Claims**

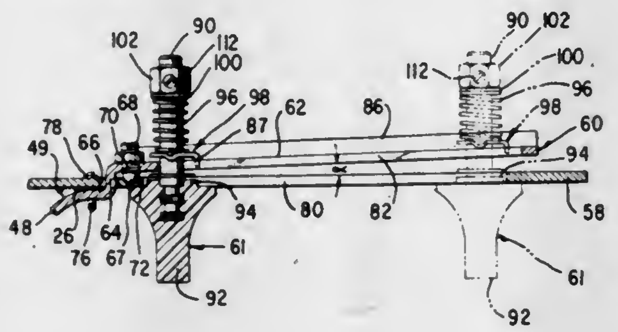

1. A thread tensioning device comprising a base plate with an opening therethrough; a rigid beam including a portion on one side of the plate defining a thread receiving gap with the plate, another portion on the other side of the plate, and a connecting portion extending through the plate opening; a fulcrum mounting the beam between the ends thereof for pivotal movement about an axis which is substantially fixed longitudinally along the base plate and beam; and a tension selector mounted for sliding motion on the base plate, the selector including a member movable along said another portion of the beam as the selector moves on the base plate, an adjustable spring for forcibly urging said member against the beam to cause frictional force to be applied to thread in said gap in accordance with the position of the selector and adjustment of the spring, and means for adjusting the spring to preset tension in the thread at a defined position of the selector along the base plate.

4,372,503

FLEXIBLE TAPE CONTROL APPARATUS

David W. Kincheloe, West Chicago, and David O. Neathery, St. Charles, both of Ill., assignors to King Instrument Corporation, Westboro, Mass.

Filed Oct. 23, 1980, Ser. No. 199,924

Int. Cl.³ G11B *15/06*

U.S. Cl. 242—183 **14 Claims**

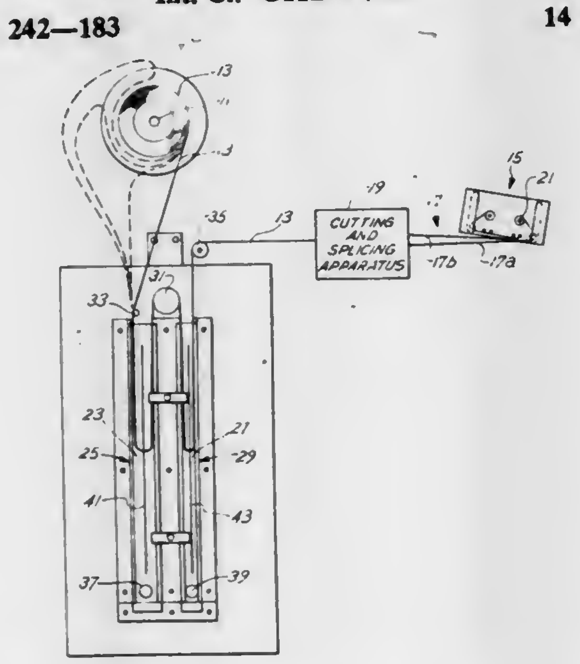

10. A tape cassette loader in which two different controlled tensions are provided to a magnetic tape moving from a supply spool to a cassette spool of a tape cassette at a greatly varying speed, said loader comprising:

a supply spool for providing a supply of magnetic tape;
a cassette spool for receiving the magnetic tape;
first tension means for receiving the magnetic tape from said supply spool and providing a first tension to said tape, said first tension means containing a length of the tape in order to maintain said first tension;
first sensor means for monitoring the length of tape contained by said first tension means;
second tension means for receiving the tape from said first tension means prior to take up by said cassette spool and providing a second tension to the tape, said second tension means containing a length of the tape in order to maintain said second tension;
second sensor means for monitoring the length of the tape contained by said second tension means;
tape moving means interposing said first and said second tension means for moving the tape from said first tension means to said second tension means; and
control means for driving said tape moving means, said supply spool and said cassette spool, said control means being responsive to said first and said second sensor means for controlling the speed at which the tape is moved by said tape moving means and controlling the speed of said supply spool, whereby said first and said second tensions are maintained during movement of the tape from said supply spool to said cassette spool.

4,372,504

MAGNETIC RECORD TAPE PROTECTIVE DEVICE FOR A TAPE CASSETTE

Tsutomu Shibata, Hachioji; Kenji Kimura, Tachikawa; Ken Satoh, Akigawa; Sinichi Saitou, Hachioji; Toshikazu Kato, Hino; Seizo Watanabe, and Ken Ohshima, both of Hachioji, all of Japan, assignors to Olympus Optical Co., Ltd., Tokyo, Japan

Filed Oct. 21, 1980, Ser. No. 199,223

Claims priority, application Japan, Oct. 26, 1979, 54-148561[U]; Oct. 26, 1979, 54-148562[U]

Int. Cl.³ G03B *1/04;* **G11B** *15/32*

U.S. Cl. 242—198 **18 Claims**

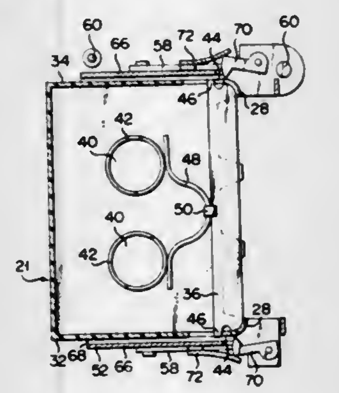

1. A magnetic recording tape protective device for a tape cassette removably loaded into a tape cassette loading section of a magnetic tape transport device, the tape cassette having a housing, at least one reel hub in said housing, and a magnetic recording tape in said housing and wound around said at least one reel hub, said housing including a pair of spaced apart holding plates for rotatively holding said reel hub, a peripheral wall formed continuously to said holding plates for connecting said holding plates, and at least one window allowing a pinch roller and a magnetic head to be inserted therethrough, said at least one window extending from said peripheral wall to at least one of said holding plates, the portion of said window in said at least one holding plate being a holding-plate forming portion of said at least one window, said protective device comprising:

a shutter member mounted in said housing and being movable between a first position to close said holding-plate forming portion of said at least one window and a second position to release the closed state of said holding-plate forming portion of said at least one window, thereby opening said at least one window;
urging means coupled to said shutter member for urging said shutter member to said first position; and
drive means at least partially provided on said shutter member for moving said shutter member from said first position to said second position in cooperation with said tape cassette loading section when the tape cassette is loaded into said tape cassette loading section, said drive means including an elongated hole formed in a surface of a housing disposed in opposition to said tape cassette loading section, said elongated hole being elongate in a direction of the movement of said tape cassette housing relative to said tape cassette loading section when the tape cassette is loaded into said tape cassette loading section; a projection fixed to said shutter member and slideably mounted in said elongated hole so as to be movable along said elongated holein said direction of movement of the tape cassette relative to the loading section; and means in said tape cassette loading section for engaging said projection of said shutter member and for sliding said projection in said elongated hole to move said shutter member to said second position when the tape cassette is loaded into said tape cassette loading section.

4,372,505

SUPERSONIC INLET HAVING VARIABLE AREA SIDEPLATE OPENINGS

Jan Syberg, Kent, Wash., assignor to The Boeing Company, Seattle, Wash.

Filed Dec. 17, 1979, Ser. No. 104,477

Int. Cl.³ B64B *1/24*

U.S. Cl. 244—53 B **6 Claims**

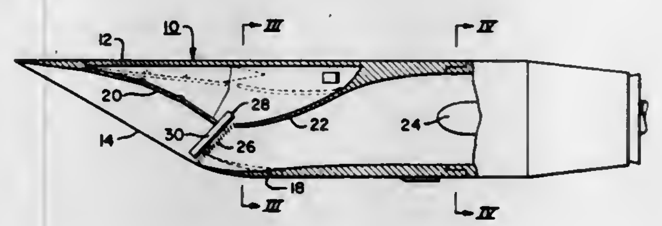

1. An inlet duct for supersonic aircraft comprising an inlet channel having top and bottom walls and side walls, the top wall extending beyond the forward lip of the bottom wall and the lower edges of the side walls extending from the forward lip of the top wall to the forward lip of the bottom wall, the walls of the duct being arranged to produce a normal shock wave in close proximity to said forward lip of the bottom wall, variable area slot means located through said side walls upstream of said bottom wall forward lip and, during substantially all engine operations, upstream of said normal shock wave, and means for varying the area of said slot means to provide boundary layer control for controlling the normal shock-boundary layer interaction.

4,372,506

LANDING GEAR FOR ULTRALIGHT AIRCRAFT

David Cronk, 1069 Eucalyptus Ave., Vista, Calif. 92025, and Lyle M. Byrum, 1471 Calle Redonda, Escondido, Calif. 92026

Filed Jun. 5, 1980, Ser. No. 156,768

Int. Cl.³ B64C *25/04*

U.S. Cl. 244—100 R **10 Claims**

1. A landing gear assembly for light winged aircraft, said gear comprising:

an elongated main axle having a wheel on each end and arch intermediate the ends;
a pair of elongated main struts, each connected at an upper end to the airframe of an aircraft and at the lower end to said axle adjacent an end thereof, said struts forming with said axle a generally triangular configuration;
a hand control cross bar disposed above and forward of said axle;
a pair of upper downwardly depending struts, each con-

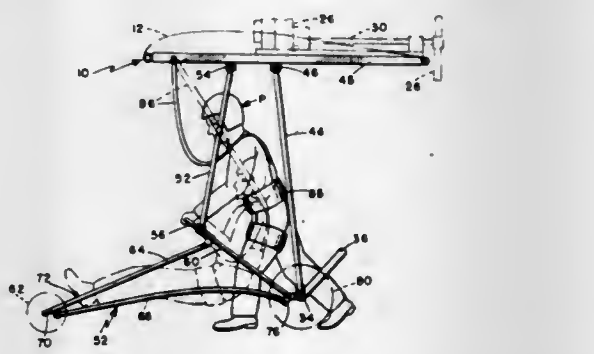

nected at an upper end to the airframe and at the lower end to an outer end of said cross bar, and
a pair of forward link members, each connected at a lower end to the main axle at one end thereof and extending upwardly and forwardly and connected to an end of said cross bar.

4,372,507

SELECTIVELY ACTUATED FLIGHT SIMULATION SYSTEM FOR TRAINER AIRCRAFT

James L. Denniston, Columbus, Ohio, assignor to Rockwell International Corporation, El Segundo, Calif.

Filed Mar. 2, 1977, Ser. No. 773,632

Int. Cl.³ B64C *9/32*

U.S. Cl. 244—113 **8 Claims**

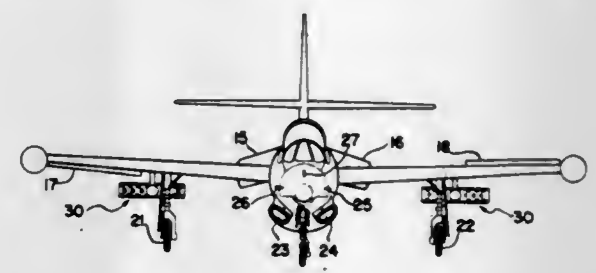

5. In a trainer aircraft, in combination:

(a) speed brake means, said speed brake means being movable from a faired position to a uniform stationary initial open position, and from said initial open position to a full open position;
(b) actuator means connected in moving relation to said speed brake means;
(c) angle of attack sensor means; and
(d) control means connected to said actuator means responsive to said angle of attack sensor means for modulating through said actuator means the position of said speed brake means from said faired position to said initial open position as a step function and in the range of said initial open position to said full open position as a function of the angle of attack of said trainer aircraft, said speed brake means being rotated approximately 10° from said faired position to said initial open position, and approximately an additional 40° from said initial open position to said full open position, said speed brake means being modulated over said range of said initial open position to said full open position through a range of approximately 5° sensed by said angle of attack sensor means.

4,372,508

DYNAMIC KICKPLATE DEPLOYMENT SYSTEM

Georg D. Frisch, Holland, and William Ward, Jr., Philadelphia, both of Pa., assignors to The United States of America as represented by the Secretary of the Navy, Washington, D.C.

Filed Mar. 16, 1981, Ser. No. 244,420

Int. Cl.³ B64D *11/06*

U.S. Cl. 244—122 AG **4 Claims**

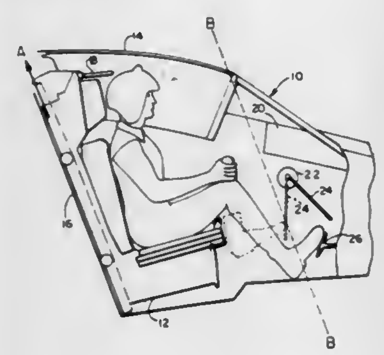

1. Apparatus for positioning the feet of a subject from the rudder pedals of an aircraft into the ejection clearance envelope of the aircraft during ejection, said envelope including all the area required for the safe ejection of the subject, comprising:

actuator means triggered by the pilot for providing an ejection command signal; and

plate means responsive to said signal pivotally mounted to the aircraft's structure on an axis forward of the envelope and parallel to the lateral axis of the aircraft for urging the feet rearwardly into the envelope.

4,372,509

DEVICE FOR FIXING AN APPARATUS IN A CUT-OUT OF A PANEL

Günter Krainhöfer, Solms, Fed. Rep. of Germany, assignor to U.S. Philips Corporation, New York, N.Y.

Filed Nov. 7, 1980, Ser. No. 205,210

Claims priority, application Fed. Rep. of Germany, Nov. 7, 1979, 2944862

Int. Cl.³ G12B *9/00*

U.S. Cl. 248—27.1 **1 Claim**

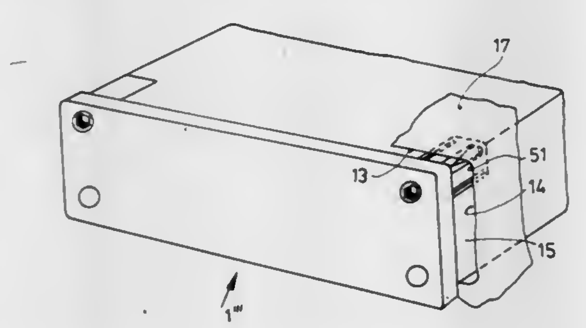

1. A system for clamping an apparatus in a rectangular cut-out of a panel, said apparatus being arranged on the rear side of the panel and a cover plate being provided on the front side of the panel, said system being adapted for use in a corner area of said cut-out, which comprises a truncated rectangular pyramid displaceable in a direction perpendicular to the plane of the panel; a frame associated with the apparatus and provided with two fixing parts, one fixing part being formed as a first clamping wedge pivotal about a first axis parallel to one edge of the cut-out and the other fixing part being formed as a second clamping wedge pivotal about a second axis perpendicular to said one edge, adjacent walls of said truncated pyramid being respectively engageable with a wall of said first clamping wedge and a wall of said second clamping wedge; and a screw extending through an opening in said cover plate into a threaded recess in said truncated pyramid, whereby adjustment of the truncated pyramid relative to the two clamping wedges may be effected from the front side of the apparatus and whereby, upon turning of the screw to draw the truncated pyramid toward the panel, said truncated pyramid engages the respective clamping wedges and forces the same outwardly in mutually perpendicular directions against the respective adjoining edges of said corner area of the cut-out.

4,372,510

WIRE RACEWAY FOR ATTACHMENT UNDER THE FLOOR OF A RAILWAY CAR

Louis M. Skypala, Oreland, Pa., assignor to The Budd Company, Troy, Mich.

Filed Aug. 4, 1980, Ser. No. 175,333

Int. Cl.³ E21F *17/02*

U.S. Cl. 248—58 **8 Claims**

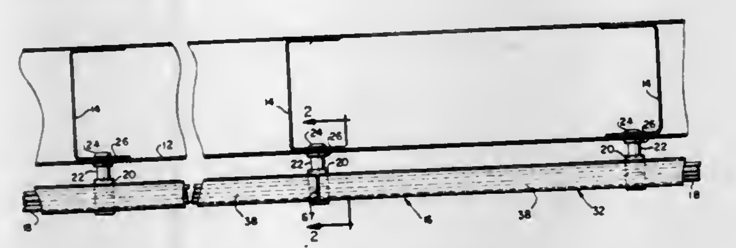

1. A wire raceway for holding wires extending under the floor of a railway car comprising:

(a) a plurality of threaded studs secured to said floor and extending downward therefrom, a spacer member positioned about said threaded stud adjacent said floor and a spaced hanger member positioned on each of said studs below said spacer and comprising a flat center connecting section about said stud, opposite laterally extending sections extending from said center connecting section for supporting wires to be placed thereon in the space between said hanger member and floor, and a nut threadably engaging the threads of said stud and engaging said center section for securing said center section against said spacer member,

(b) a cover below said nut and including a plurality of extending sections extending between said spaced hanger members, and

(c) strap elements disposed to be connected to said threaded stud at the ends of said sections of said cover to support said sections against said hanger members.

4,372,511

OPTICAL FIBER CABLE STRAIN RELIEF ASSEMBLY

Susan F. Knowles, North Andover, Mass., assignor to Bell Telephone Laboratories, Incorporated, Murray Hill, N.J.

Filed Dec. 8, 1980, Ser. No. 213,936

Int. Cl.³ F16L *3/08*

U.S. Cl. 248—68 R **3 Claims**

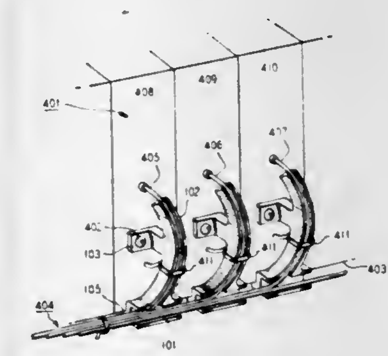

1. An assembly for planar surface mounting which supports and guides a plurality of optical fiber cables (404), said assembly being CHARACTERIZED BY

a straight cable duct (101) having uninterrupted bottom and sidewall surfaces sized to completely receive said cables, said straight duct being open at the top to allow accessability to said cables when said assembly is mounted;

a curved cable duct (102) which extends from an intermediate position on said straight cable duct to completely receive and guide a selected one of said cables through two coincident gradual curves (106,107) in two orthogonal planes, said curved cable duct being open at the top to allow accessibility to said selected cable when said assembly is mounted;

a support leg (103) extending from said curved cable duct to an end which is in alignment with a portion of the underside of said straight duct; and

a protrusion (105) extending from said straight duct beyond said end to restrict rotation of said strain relief assembly by extending over the edge of the planar mounting surface.

4,372,512

BAG SUPPORTING APPARATUS

W. Roger Wolfe, 3801 Northlake Creek Dr., Tucker, Ga. 30084

Filed May 14, 1981, Ser. No. 263,359

Int. Cl.³ A63B *55/04*

U.S. Cl. 248—97 **3 Claims**

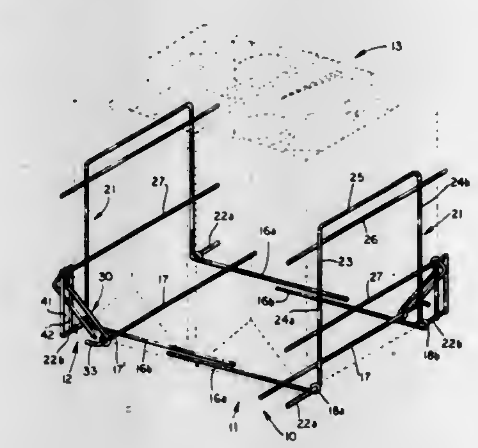

1. Support apparatus for stabilizing in an upright position at least one unstable object such as a grocery bag or the like, said apparatus comprising:

base means receivable beneath an object to be stabilized, said base means including a plural number of tines maintained in mutually spaced apart relationship in a common plane, to fit between the object being stabilized and a support surface;

upright support means pivotably connected to said base means, and selectably movable to occupy either an upright or a folded position relative to said base means;

latch means operatively associated with said object support means to maintain said object support means in the upright position relative to said base means, so as to contact and support an object received on said base means;

said latch means being selectably operative to allow the object support means to pivot to the folded position disposed alongside and substantially parallel to said tines of the base means;

said upright support means comprising a U-shaped member including a pair of spaced apart elongated support members individually pivotably connected to corresponding tines, and a bridging member extending between said elongated support members at a location spaced apart from said pivotable connection and rigidly interconnecting the elongated support members;

said latch means including a latch member connected to one of said elongated support members spaced apart from said pivotable connection, and a latch engaging member movably connected to the corresponding tine of said base means spaced apart from said pivotable connection;

said latch engaging member including a first channel extending from said movable connection and within which said latch member is slidably disposed, and a second channel joining said first channel at a substantial angle to selectably slidably receive said latch member;

said second channel being located above said first channel in position for alignment with said latch member when said elongated support members are moved to said upright position, so that the latch member enters said second channel and the latch engaging member automatically moves downwardly to latch the upright position when said latch member is moved along said first channel into alignment with said second channel; said latch engaging member being selectably operative to disengage the latching member when the latch engaging member is moved upwardly to return said latch member to said first channel; and

guide means engaging said latch member to move said latch engaging member to position substantially in plane alignment with said tines and said upright support means when moved to said folded position, so that the entire apparatus is folded substantially flat for storage.

4,372,513

SUPPORT COUPLING FOR OUTDOOR ELECTRICAL JUNCTION BOX

Thomas P. Calnan, 4200 NE. 3rd Ave., Pompano Beach, Fla. 33064

Filed Aug. 11, 1980, Ser. No. 177,223

Int. Cl.³ A47G *23/02*

U.S. Cl. 248—146 **3 Claims**

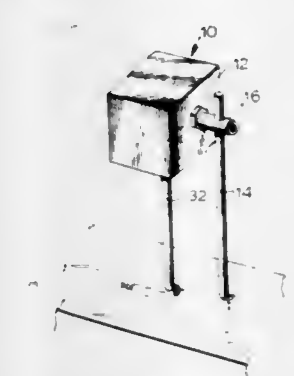

1. In combination with an existing outdoor electrical junction box supported above the ground and having at least one knockout opening and an easily connectable support shaft driven into the ground adjacent said outdoor electrical junction box, and a coupling member comprising:

a body, said body having a threaded end means for securing said body to said knockout opening of said junction box;

a central passageway means disposed transversly through said body, said passageway means sized for sliding engagement with said support shaft to support said outdoor electrical junction box above the ground;

retaining means for maintaining said coupling member in a predetermined non-slidable position along said support shaft;

said threaded end means sized for threadably mating with said opening in said outdoor electrical junction box for securing said coupling member to said outdoor electrical junction box;

nut means for locking said outdoor electrical junction box and said coupling member in a particular position by external movement of said nut means, said nut means screwed onto said threaded end means before said threaded end is mated with said outdoor electrical junction box.

4,372,514
MOBILE STORAGE PLATFORM
Nick P. Glumac, 355 Litchfield Rd., Kingsford Heights, Ind. 46346
Filed Sep. 15, 1980, Ser. No. 187,349
Int. Cl.³ F16M *11/32*
U.S. Cl. 248—163 R **2 Claims**
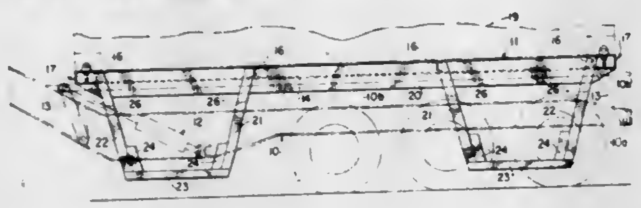
1. In a mobile storage platform having at least two peripheral longitudinal members and a plurality of lateral members connected thereto comprising a horizontal frame, and having supporting legs connected to and depending from said frame, the improvement wherein the supporting legs are arranged in pairs, at least two pairs along each longitudinal side, the legs of each pair converging from their connector with the frame, a foot piece joined to the converging free ends of each pair, stop means attached to said converging ends and spacer means intermediate the upper ends of said legs and said frame, whereby a plurality of essentially identical mobile storage platforms may be stacked one upon the other with the converging pairs of legs of a next upper platform being received within the pairs of a next lower platform, said pairs nesting within each other and said stop means limiting nesting to prevent jamming in a longitudinal direction while said spacer means prevents jamming of said legs in a lateral direction.

4,372,515
CRT HOUSING SUPPORT AND ROCKING TILT APPARATUS
D. Thomas Noonan, Irving, Tex., assignor to Xerox Corporation, Stamford, Conn.
Filed Sep. 8, 1980, Ser. No. 184,873
Int. Cl.³ F16M *11/04*
U.S. Cl. 248—178 **4 Claims**

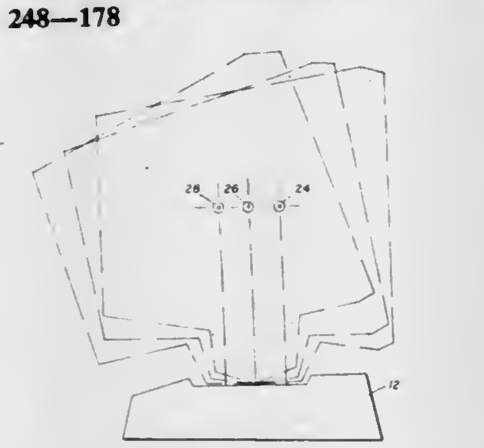

1. Apparatus for supporting a display housing while providing rocking tilt adjustment, said apparatus comprising:
a housing support member operatively connected to said housing;
a base member;
means for mounting said base member to said housing support member to allow a rolling tilt movement therebetween, said means for mounting including an involute gear form and rocker means;
vertical retention means for preventing separation of said base member and said housing support member when upward force is applied to said housing support member, said vertical retention means including a U-shaped bracket attached to said housing support member and positioned such that the open portion of the U-shaped bracket is directed away from the housing support member, each end portion of the U-shaped bracket being formed to provide an arcuate shaped aperture therein, two L-shaped brackets attached to the base member with one end portion of each L-shaped bracket being formed to provide an aperture therein, said L-shaped brackets being positioned with the end portion containing the aperture in operative relationship with the aperture formed in a corresponding end portion of the U-shaped bracket, fastener means operatively positioned through said apertures;
said vertical retention means including a spring-loaded friction mechanism operatively associated with said vertical retention means to assure that said housing support member retains its position with respect to said base after a rocking tilt adjustment has been completed.

4,372,516
SHELF MOUNTING BRACKET AND ASSEMBLY
Lawrence M. Nyquist, 3018 N. Spaulding, Chicago, Ill. 60618
Filed Feb. 3, 1981, Ser. No. 231,510
Int. Cl.³ A47G *29/02*
U.S. Cl. 248—235 **3 Claims**

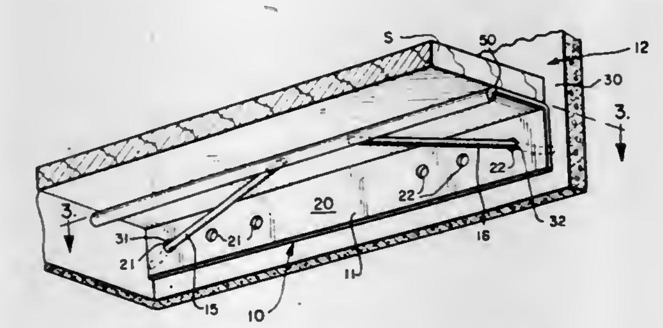

1. A bracket and wall combination comprising:
(a) a sheet of drywall;
(b) a bracket member having a side leg;
(c) said side leg being seated flush against the outer surface of said drywall;
(d) said bracket member also having a top leg;
(e) said top leg extending substantially the length of said side leg and protruding outwardly of said side leg to a free edge;
(f) lip means formed on said outer free edge of said top leg, substantially along its length, and inwardly toward said side leg;
(g) an aperture in said side leg and a hole formed through said drywall sheet in alignment with said aperture;
(h) pin means having an inner section, a middle section and an outer section having a free end;
(i) said pin means extending through said aperture and said hole and adapted to grip the sheet with its inner section when its outer section is pivoted about said middle section towards said side leg;
(j) said free end of said outer section being resiliently retained under said lip means with said inner section gripping said wall to hold said bracket tightly against said sheet.

4,372,517
SLOT-TYPE ACCESSORY MOUNTING
Joseph J. Welch, Huntington Beach; William C. Grove, Tujunga, and Michael E. Moran, Newhall, all of Calif., assignors to Lockheed Corporation, Burbank, Calif.
Filed Jul. 2, 1980, Ser. No. 165,260
Int. Cl.³ F16M *11/00*
U.S. Cl. 248—267 **19 Claims**

1. A quick attach-detach mechanism for mounting a first member to a second member comprising:
a collar means rotatably coupled to said first member, said collar being slotted to provide a pattern of circumferentially spaced slots;
a plurality of fastener means secured to said second member, said fasteners being circumferentially spaced and adapted to pass through a first portion of said slots upon relative axial movement between said collar means and said second member, said fasteners and said slots being further

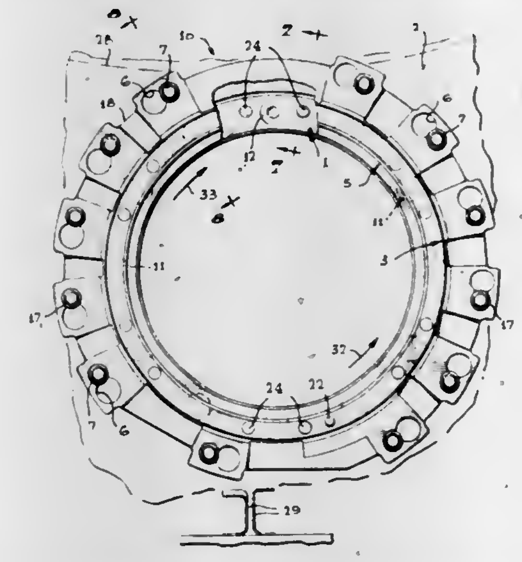

adapted to mount said first member to said second member upon rotation of said collar, each said fastener means comprising a shaft element and an enlarged element adapted for movement along said shaft.

4,372,518
MUSIC STAND EXTENDER
Americole R. Biasini, Bellingham, Wash., assignor to Allsop, Inc., Bellingham, Wash.
Continuation-in-part of Ser. No. 916,204, Jun. 16, 1978, Pat. No. 4,312,490. This application Dec. 10, 1979, Ser. No. 101,878
Int. Cl.³ A47B *19/00*
U.S. Cl. 248—441 R **25 Claims**

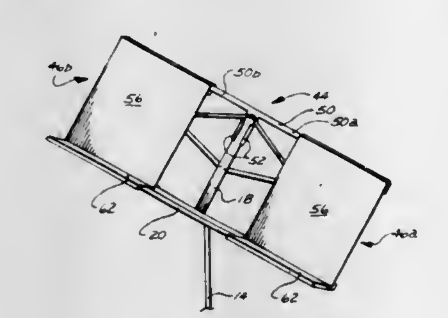

1. An extension apparatus to enlarge the support area of a stand, such as a music stand, said stand having a main central support member and a lower support member extending laterally from the central support member, said apparatus comprising:
a. an upper support section adapted to be mounted to said stand at an upper end thereof, said support section comprising two laterally and oppositely extending support arms,
b. a pair of extension wings adapted to be mounted to said stand and to said upper support section, each wing comprising:
1. a panel portion,
2. a lower support flange means adapted to be positioned against the lower support member of the stand,
3. a lower retaining portion adapted to engage said lower support member to permit lateral slide motion between the wing and the lower support member,
4. an upper retaining portion adapted to engage a related support arm to permit lateral slide motion between the wing and the related support arm,
whereby with said upper support section mounted to said stand, and with each of the extension wings mounted to the stand and to the upper support section, the two wings can be moved horizontally inward to a middle position, or horizontally outwardly to an expanded position to provide an expanded support area for the stand.

4,372,519
APPARATUS FOR MOUNTING A MIRROR
Francis E. Huntoon, Des Plaines, Ill., assignor to Teletype Corporation, Skokie, Ill.
Filed Oct. 29, 1980, Ser. No. 201,896
Int. Cl.³ A47G *29/00*
U.S. Cl. 248—466 **5 Claims**

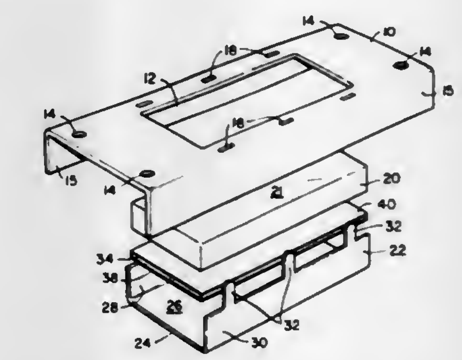

1. An apparatus for mounting a mirror (20) comprising:
a mounting plate (10) with a mirror opening (12) defined in said mounting plate (10), said mounting plate (10) having a substantially flat first surface over that portion of the mounting plate (10) adjacent the opening (12);
a concave channel (22) defining a cavity (24);
a resilient compressible backing material (34) positioned in said cavity (24);
a front surface mirror (20) positioned in said cavity (24) adjacent said resilient compressible backing material (34) with the reflective surface (21) of said mirror (20) disposed toward said opening (12) and adjacent said first surface;
means (18, 32) for securing said channel (22) to said mounting plate (10) with said reflective surface (21) of said mirror (20) being positioned adjacent and exposed through the mirror opening (12) defined by said mounting plate (10);
said mounting plate (10) defines at least two holes (18) spacially located around said opening (12);
said channel (22) defines at least two mounting tabs (32) for placement into said holes (18) defined by said mounting plate (10) so that when said tabs (32) are deformed after positioning into said holes (18) the channel (22) will be secured to said mounting plate (10);
said channel (22) is "U" shaped having a generally flat bottom wall (26) and two parallel side walls (28, 30) extending from said bottom wall (26) in a first direction; and
each of the ends of said walls (28, 30) have at least one of said mounting tabs (32) for entry into the holes (18) defined by said mounting plate (10).

4,372,520
SUSPENSION FOR THREE-AXIS ACCELEROMETER
Sidney G. Shutt, Brea, Calif., assignor to Rockwell International Corporation, El Segundo, Calif.
Filed Aug. 13, 1981, Ser. No. 292,541
Int. Cl.³ G01P *15/02;* F16M *13/00*
U.S. Cl. 248—604 **9 Claims**

1. An instrument, comprising:
(a) a base member;
(b) a suspended member having a central longitudinal axis; and
(c) elastic suspension means for maintaining the position of said suspended member relative to said base member, wherein said elastic suspension means comprises:
(1) a mounting frame, comprising:

(i) a central hub attached to said base and substantially centered on said longitudinal axis;
(ii) a plurality of spokes spaced apart from each other attached to and extending outward from said hub; and
(iii) a mounting ring attached to said spokes substantially centered on said longitudinal axis, wherein said

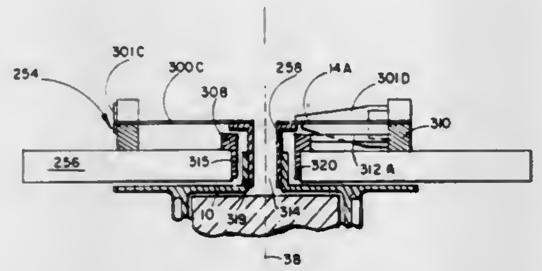

mounting ring has a radius larger than the radius of said hub; and
(2) an array of support filaments, wherein an inward portion of each of said support filaments is attached to said suspended member, and wherein an outward portion of each of said support filaments is attached to said mounting ring.

4,372,521
ADJUSTING MECHANISM FOR THE SEAT OF AN AUTOMOBILE
Hans Rampel, Eicha; Peter Hess, and Volkmar Schulz, both of Coburg, all of Fed. Rep. of Germany, assignors to Metallwerk Max Brose GmbH & Co., Coburg, Fed. Rep. of Germany
Continuation of Ser. No. 888,503, Mar. 20, 1978, Pat. No. 4,228,981. This application Oct. 16, 1979, Ser. No. 85,308
Claims priority, application Fed. Rep. of Germany, Mar. 28, 1977, 2713693
Int. Cl.³ F16M *13/00*
U.S. Cl. 248—430 **5 Claims**

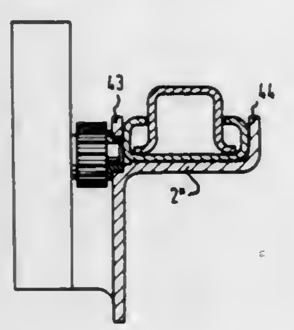

1. An adjustment mechanism for a sliding seat such as a motor vehicle seat, comprising carriers elongated in the direction of sliding seat movement, a seat shifting guide arrangement supported on said carriers for adjustment in the direction of sliding seat movement, each carrier having integrally connected upwardly extending flanges for laterally supporting said seat shifting guide arrangement, said seat shifting guide arrangement comprising an upwardly open U-shaped track supported on each said carrier with the upper edges of the U-shaped track being bent inwardly toward one another, a downwardly open U-shaped track being located within said upwardly open U-shaped track and arranged to support the sliding seat, said downwardly open U-shaped track having the lower edges thereof bent outwardly within and slidably guided in contact with said upwardly open U-shaped track, and said upwardly extending flanges on said carrier laterally supporting the upwardly extending outside surfaces of said upwardly open U-shaped track, said upwardly extending flanges are punched out of said carrier in a lug-like form and are bent upwardly therefrom into laterally supporting contact with said upwardly open U-shaped track, and said lug-like upwardly extending flanges comprise a number of said flanges extending along said carrier in the direction of sliding seat movement with said lug-like flanges on opposite sides of said upwardly open U-shaped track being offset relative to one another in the direction of sliding seat movement.

4,372,522
SECTIONAL WALL FORM SYSTEM
George Simeonoff, 191 King St., Weston, Ontario, Canada (M9N 1L8)
Filed Feb. 9, 1981, Ser. No. 232,964
Int. Cl.³ E04G *11/08, 17/04*
U.S. Cl. 249—18 **14 Claims**

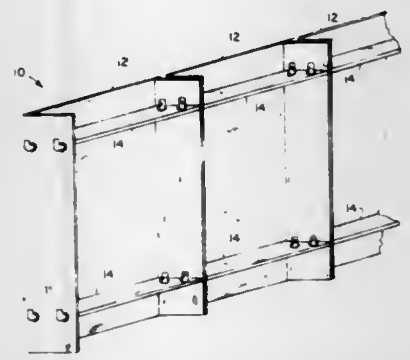

1. An interlocking sectional wall form system, comprising in combination:
first and a second channel panels, each of said channel panels having a face portion and a first and a second side portion angularly disposed from said face portion;
first and second channel locking aperture means located in said first and second side portions of said channel panels;
first and second detachable lock brackets;
said first lock bracket being adapted for insertion between said first and second side portions of said first channel panel, said second lock bracket being adapted for insertion between said first and second side portions of said second channel panel;
each of said lock brackets including a first and second side portion;
locking rod means connected to said second side portion of each of said lock brackets; and
means for connecting said locking rod means of said first lock bracket through said second locking aperture means of said first channel panel and through said first locking aperture means of said second channel panel for securing said first and second channel panels in an adjacent relationship and means for simultaneously securing said locking rod to said first side portion of said second lock bracket.

4,372,523
ICE MAKING CONTAINER APPARATUS
Billy R. McCartney, 8305 Londonderry, Dallas, Tex. 75228
Filed Aug. 24, 1979, Ser. No. 69,265
Int. Cl.³ B28B *7/34;* **F25C** *1/04*
U.S. Cl. 249—79 **4 Claims**

1. Ice making apparatus for producing a removable ice block comprising:
a first container for receiving water to be frozen in the form of said ice block;
a second container larger than said first container for receiving said first container;
support means between the walls of said first and second containers for spacing said first container from said second container to form a space between the walls of said first and second containers;
receptacle means in the wall of said second container for receiving warm fluid into said space to warm the walls of the first container and enable removal of said ice block therefrom; and
a cover member having means for engaging the walls of said

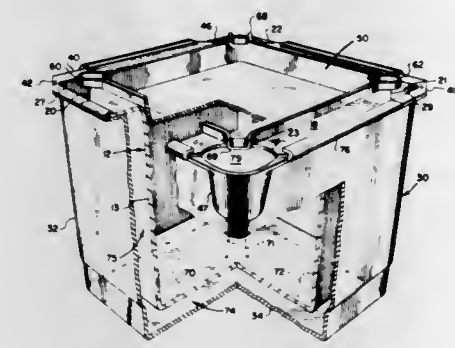

first container to enclose the top of said first container, said cover member including spout means opening toward said receptacle means for directing the warm fluid into said receptacle means.

4,372,524
MOULD FOR PRODUCING PROFILED ELEMENTS OF PLASTICS MATERIAL
Jean-Yves Pailler, Sugeres, France, assignor to Etablissements EVIRA, France
PCT No. PCT/FR80/00177, § 371 Date Jul. 31, 1981, § 102(e) Date Jul. 31, 1981, PCT Pub. No. WO81/01682, PCT Pub. Date Jun. 25, 1981
PCT Filed Dec. 5, 1980, Ser. No. 287,755
Claims priority, application France, Dec. 6, 1979, 79 30006; Nov. 21, 1980, 80 24810
Int. Cl.³ B29D *27/04;* **B29C** *6/00*
U.S. Cl. 249—79 **24 Claims**

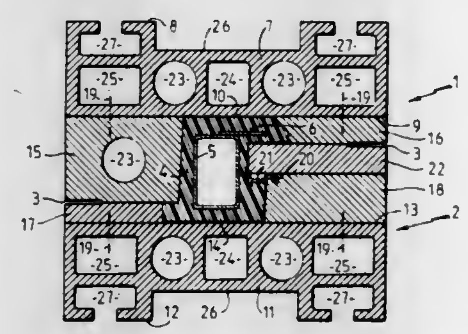

1. Mould for producing elongated profiled elements of plastics material, notably of high density polyurethane with a thin construction and integral skin, comprising:
an upper half-mould and a lower half-mould, said two half-moulds being separated by a joint plane and each having lateral faces parallel to said elongated element and transverse ends;
said half-moulds being respectively associated with tightening means and defining together the impression of a profiled element to be moulded from said plastics material;
each of said half-moulds comprising a shoe having an outer surface and an inner surface;
said outer surface including removable fastening means cooperating with said tightening means;
said inner surface being parallel to said joint plane and forming the bottom of said impression;
interchangeable profile-defining members respectively fixed to said inner surface and forming the sides of said impression;
at least one passage in said shoe for the circulation of a fluid for maintaining the temperature of formation of said plastics material at a substantially constant value.

4,372,525
INSOLE, APPARATUS FOR MOLDING AND METHOD OF MAKING SHOES
Curtis A. Uhlig, P.O. Box 4412, Harrisburg, Pa. 17111
Filed Jun. 5, 1980, Ser. No. 156,804
Int. Cl.³ B29C *1/02*
U.S. Cl. 249—102 **5 Claims**

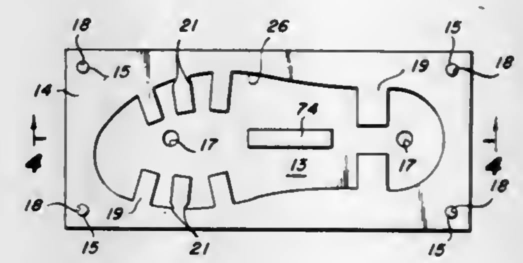

1. An injection mold for making plastic insoles designed to have a specific thickness and quite irregular configuration adapting it for attachment to unit sole structures and the ends of vamp and heel means for a pair of shoes, comprising a pressure containing mold means which includes a first platen and a second platen moveable relatively toward each other to close the mold means and being adapted to contain a plastic molding pressure, and away from each other to an open position to permit a molded insole to be removed from the mold means, a base plate, a first apertured mold sheet having substantially planar surfaces adapted to be fixedly secured in a precise position relative to said base plate and a second apertured mold sheet having substantially planar surfaces adapted to be secured in a precise position relative to said first sheet, the peripheries of said apertures in each of said first and second mold plates coinciding to form the peripheries of the insoles produced therein, said first mold sheet having integral land means extending inwardly into its aperture to form recesses to receive the ends of said vamp and heel means, said platens holding said base plate and apertured mold sheets in a juxtaposed position when said mold means is closed whereby they cooperate to provide a mold cavity, means to feed a plastic to be molded into the mold cavity thus provided, and the combined thickness of said apertured mold sheets being equal to the designed thickness of an insole, and the molded insole being removed from between said platens when they are moved to said open position.

4,372,526
ICE CUBE MAKING APPARATUS AND SERVING SYSTEM
Robert H. C. M. Daenen, Hekelgem, Belgium, and Erik Herlow, Tikob, Denmark, assignors to Dart Industries, Inc., Northbrook, Ill.
Filed Sep. 17, 1981, Ser. No. 280,854
Int. Cl.³ F25C *1/24*
U.S. Cl. 249—119 **8 Claims**

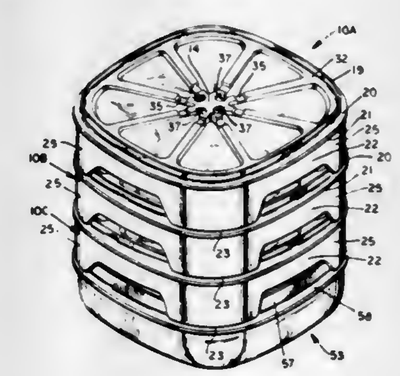

1. Ice cube making apparatus comprising: means having an outer periphery and defining within said periphery a plurality

of freezing compartments each capable of holding a certain amount of liquid; and

drain means located on said first-mentioned means to receive the gravity flow of liquid supplied to said freezing compartments in excess of said certain amount, and including an opening within said periphery so that the excess liquid drains to a location below said freezing compartments.

4,372,527

BLOWOUT PREVENTER

Irwin Rosenhauch, Rockwell, and Gary D. Ellis, Richardson, both of Tex., assignors to Dresser Industries, Inc., Dallas, Tex.

Filed May 5, 1980, Ser. No. 146,576

Int. Cl.³ E21B *33/06*

U.S. Cl. 251—1 A **20 Claims**

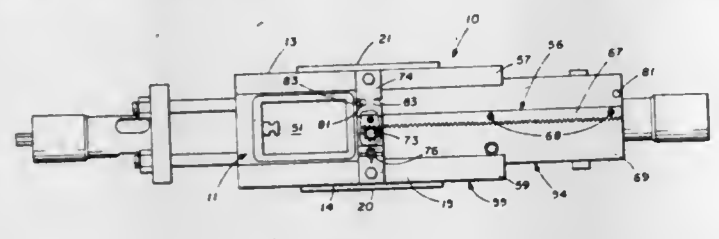

2. In a blowout preventer including a housing with a plurality of interconnected sides defining a hollow interior containing opposed rams with sealing blocks thereon for movement toward each other to seal against tubing extending through the housing, and a door mounted on to said housing and normally closing an opening in one of said sides and through which access is provided to the interior of said housing, the improvement comprising, the door guide connected to said housing and located generally within a plane paralleling said one side, said door being connected with said guide against substantial movement in a direction generally perpendicular to said plane, door sliding means connected between said housing and said door for moving said door in a generally edgewise direction between a first position covering said opening and a second position exposing said opening to allow access to the interior of said housing and a sealing member associated with said opening and acting between said housing and said door when closed to seal against pressure leakage from within said housing.

4,372,528

PINCH VALVE SLEEVE

Spiros G. Raftis, Pittsburgh, Pa., assignor to Red Valve Co., Inc., Pa.

Filed Jul. 6, 1981, Ser. No. 280,827

Int. Cl.³ F16L *55/14*

U.S. Cl. 251—4 **11 Claims**

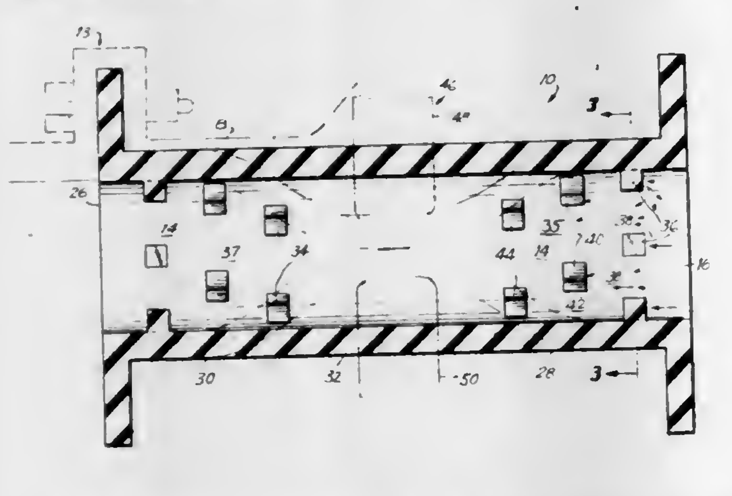

1. In a pressure-reducing pinch valve adapted to be mounted in a hollow valve arrangement having pinching means, said arrangement being adaptable for interposition in a conduit system adapted for conveying pressurized fluid material, a hollow, flexible, resilient elongated valve sleeve body fabricated in one piece from a resilient elastomeric material with an inner surface bounding a flow-through passage for the pressurized fluid material, said sleeve body having:

(a) means providing an inlet opening at one end for permitting ingress of fluid material at a predetermined pressure into the flow-through passage;

(b) means providing an outlet opening at an opposite end for permitting egress of fluid material at a reduced pressure that is lower than said predetermined pressure from the flow-through passage;

(c) an ingress section adjacent to the inlet opening;

(d) an egress section adjacent to the outlet opening;

(e) a pinchable intermediate section situated between said ingress and egress sections and constrictable by the pinching means; and

(f) means for reducing the pressure of the fluid material from said predetermined pressure to said reduced pressure, including a plurality of mutually spaced, radially extending, inwardly directed protrusions on the inner surface of the sleeve body and formed of one-piece elastomeric construction therewith, said protrusions being operative for reducing the pressure of the pressurized fluid material even when the pinching means is not operative to constrict the pinchable intermediate section, whereby greater control over the pressurized fluid flow is obtained regardless of the operation of the pinching means.

4,372,529

PLASTIC VALVE HAVING A CAP NUT COUPLER

Shigenobu Kato, Asaka, Japan, assignor to Sekisui Kagaku Kogyo Kabushiki Kaisha, Osaka, Japan

Filed Mar. 25, 1981, Ser. No. 247,503

Claims priority, application Japan, Mar. 31, 1980, 55-43330[U]

Int. Cl.³ F16L *37/28, 25/00*

U.S. Cl. 251—151 **6 Claims**

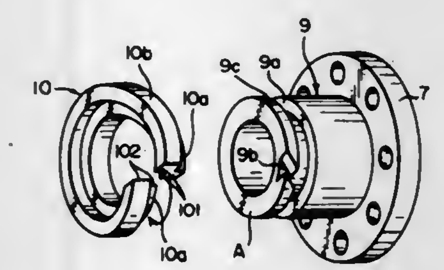

1. In a valve formed of synthetic resinous material including a body having an end surface and a peripheral surface and a cylindrical body cap having a flange portion at one end and a seat at the other end, the body cap being coupled to the body by screwing a cap nut, movably surrounding the peripheral surface of the body cap, to engage the seat and the peripheral surface of the body and hold the body to the body cap at the end surface of the body, the improvement wherein:

the body cap includes a cylindrical element having a cylindrical disengagement-preventing end portion at the other end of the body cap having a free front end face formed in a first plane facing the end surface of the body, the body cap having an annular groove adjacent said disengagement-preventing end portion;

the body cap further comprising a ring-like element including a small diameter portion fittable into said groove, said small diameter portion having a first cylindrical inner surface having a first inner diameter; said ring-like element further comprising a large diameter portion having a second cylindrical inner surface having a second inner diameter greater than said first inner diameter and a radially extending front end surface, said ring-like element having such dimensions that when said small diameter portion is fitted in said annular groove, said second cylindrical inner surface contacts the outer peripheral surface of said disengagement-preventing end portion and said radially extending front end surface lies in said first plane; said ring-like element having a cut defining two separable confronting surfaces, whereby said ring-like element is deformable around said cylindrical element to fit said small diameter portion into said annular groove and position said large diameter portion on said disengagement-preventing end portion; said ring-like element further having a rear wall forming the seat extending radially outwardly of the peripheral surface of said disengagement-preventing element and facing the one end of the body cap.

4,372,530

VALVE AND SEAL

Carl F. Livorsi, Warwick, R.I., assignor to Quartrol Corporation, Birmingham, Ala.

Filed Jun. 5, 1981, Ser. No. 270,910

Int. Cl.³ F16K *25/00*

U.S. Cl. 251—173 **30 Claims**

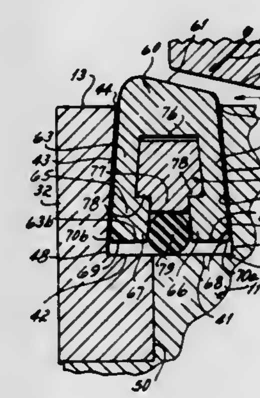

1. Valve apparatus comprising:

a valve body having an interior surface defining a fluid passageway,

a valve disk for selectively closing said passageway,

a circumferential groove in said valve body extending from said surface radially outward into said valve body,

said groove having a bottom surface in said valve body and a tapered side wall,

a retainer ring disposed on said valve body and having a tapered surface defining another side wall of said groove and a surface defining a bottom of said groove,

said groove having a mouth at said interior surface, and being wider at its bottom than at its mouth,

a tapered, resilient seat ring disposed in said groove for sealingly engaging a periphery of said disk,

said seat ring having side legs, each substantially parallel to a respective tapered side wall of said groove, and said legs joined together at the mouth of said groove and normally extending through said mouth, forming a sealing portion,

a metallic back-up ring disposed between said seat ring legs, circumscribing said sealing portions, and spaced from said sealing portion, and

a resilient "O"-ring disposed between the bottom of said groove and said back-up ring and between ends of said legs.

4,372,531

CERAMIC GATE VALVE AND COMPONENTS THEREFOR

M. Jack Rollins, and William P. Coppin, both of Muncie, Ind., assignors to Maxon Corporation, Muncie, Ind.

Filed Nov. 18, 1980, Ser. No. 207,858

Int. Cl.³ F16K *25/00*

U.S. Cl. 251—174 **18 Claims**

1. An improved ceramic gate valve apparatus for controlling the flow of high temperature and corrosive fluids through a conduit pipe having a longitudinal dimension, said valve comprising:

a valve housing disposed on the conduit pipe, said valve housing having influent openings and effluent openings connected to said conduit pipe, said valve housing having a valve gate containing chamber internally thereof and disposed transverse to the longitudinal dimension of said conduit pipe;

a valve gate disposed in said valve gate containing chamber for reciprocating movement between a first position to open said valve and a second position to close said valve and positions intermediate said first and second positions for reduced and controlled flow through the conduit pipe, said valve gate comprised of a ceramic material and defining a slab shape of relatively lesser width in the direction of the longitudinal dimension of said conduit pipe and relatively greater width in the transverse dimension, said valve gate having a valve gate aperture therein for permitting flow therethrough when the valve gate is disposed in said first position, said valve gate having a solid portion disposed opposite said valve gate aperture for closing said valve when said valve gate is in said second position;

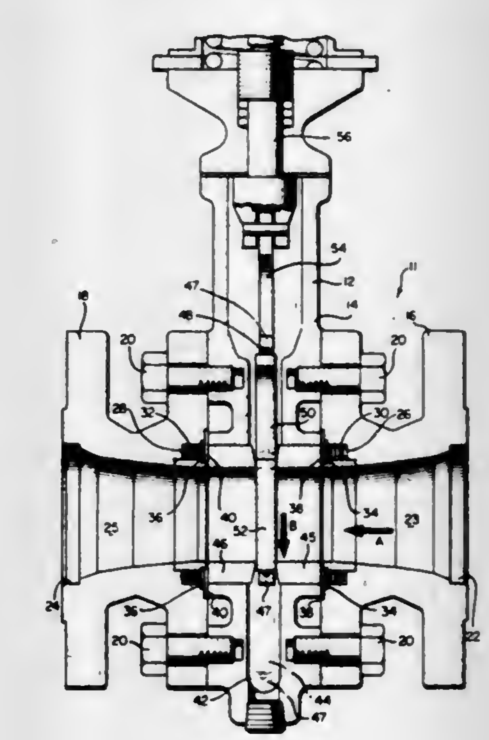

a pair of valve seats each of which is disposed on an opposite side of and engages said valve gate, said valve seat comprised of a ceramic material, each said valve seat having an opening therein to permit flow from the conduit pipe therethrough when said valve gate is in the first position, each said valve seat being substantially stationary in the transverse dimension and each said valve seat being disposed for inward urging in the longitudinal direction for snug engagement with said valve gate;

reciprocating means connected to said valve gate for disposing said valve gate between said first and second positions to open and close respectively said valve;

compression means surrounding said ceramic valve gate for providing an inwardly compressive force to the peripheral surface thereof to increase the strength thereof; and

ceramic springs disposed exterior of each said valve seat for urging the valve seat pair inwardly toward and into engagement with said ceramic valve gate with sufficient force to effect a slideable but sufficiently snug engagement, and to prevent leakage of the conducted material around the engagement seal between said ceramic valve seat and said ceramic valve gate.

4,372,532
VALVE
Ryozo Yamamoto; Keiichi Yanase, and Junzo Oku, all of Hirakata, Japan, assignors to Kubota, Ltd., Osaka, Japan
Filed Nov. 13, 1979, Ser. No. 93,775
Claims priority, application Japan, Nov. 14, 1978, 53-140763; Mar. 15, 1979, 54-30701
Int. Cl.[3] F16K *25/00*
U.S. Cl. 251—175 4 Claims

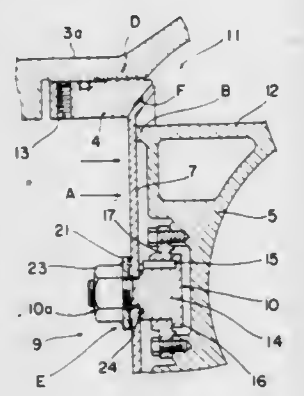

1. A valve comprising a valve housing, a fluid passage in said valve housing, a tubular valve closure member having an inner diameter substantially equal to the diameter of said fluid passage within said valve housing, said tubular valve closure member being mounted to be rotatable around an axis normal to the direction of the fluid flow within said valve housing, an elastically flexible, substantially disc-shaped diaphragm including a central connecting portion which is secured to a central portion of said valve closure member by a keying means for axial movement relative thereto, a valve seat provided within the valve housing, said disc-shaped diaphragm having a contact surface which contacts said valve seat, the contact surface being spherically shaped to correspond to a portion of a surface of an imaginary sphere having its center at the intersection of the rotational axis of the valve closure member and the central axis of the disc-shaped diaphragm, said valve closure member including a first annular stopper means which is in contact with an annular portion of said disc-shaped diaphragm adjacent to a portion thereof which contacts said valve seat when said tubular valve closure member, is closed, said annular stopper means coacting with said disc-shaped diaphragm for arresting said disc-shaped diaphragm and controlling flexion of said disc-shaped diaphragm under fluid pressure, wherein said movable central connecting portion of said disc-shaped diaphragm is keyed to said valve closure member to shift in a direction along the central axis thereof under fluid pressure.

4,372,533
PNEUMATIC LIFT PAD
Ernest Knaus, Akron; Paul E. Liggett, Wooster, and Raymond J. Namsick, Akron, all of Ohio, assignors to Goodyear Aerospace Corporation, Akron, Ohio
Continuation of Ser. No. 151,049, May 19, 1980, abandoned. This application Mar. 12, 1982, Ser. No. 357,365
Int. Cl.[3] B66F *3/24*
U.S. Cl. 254—93 HP 15 Claims

1. A press-molded, high-pressure, pneumatic lift pad including two substantially rectangularly-shaped, cord-reinforced, elastomeric covers enclosing an expansion chamber comprises:

a first reinforcement fabric comprised of a plurality of parallel cords, each of said cords being continuous from one cover through two opposite peripheral edges with the ends terminating in the opposite cover and overlapping at least 75% of the cover from one edge to the other;

a second reinforcement fabric comprised of a plurality of parallel cords, each of said cords being continuous from one cover through two opposite peripheral edges with the ends terminating in the opposite cover and overlapping at least 75% of the cover from one edge to the other, the cords of the second reinforcement fabric being orthogonally oriented with respect to the cords of the first reinforcement fabric and the lapped ends of each of the reinforcement fabrics being embedded in elastomer of the opposite cover such that each cover is comprised of at least three reinforcement cord plies and the cords of two of the plies are oriented orthogonally with respect to the other of the plies;

at least one ply of reinforcement fabric comprised of a plurality of parallel cords embedded in elastomer and positioned laterally in the peripheral edges of the pad so as to be orthogonal to the cords of the first and second reinforcements which pass through the peripheral edges;

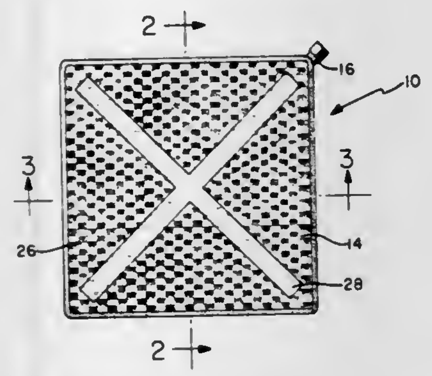

at least one ply of a square woven fabric embedded in the peripheral edges of the pad inwardly of the other reinforcement cord fabrics;

a ply of a release material adhered to the inside surface of at least one of the covers; and

a valve mounted in at least one of the corners of the pad and having a nipple portion protruding from the corner thereof for connection to a source of high pressure fluid, said nipple terminating in a substantially flat, triangular-shaped base embedded in elastomer and the taper of the base is substantially parallel to the edges of the pad such that the cords of the reinforcement fabrics form crossed-cords which entrap the triangular base within the pad structure.

4,372,534
PNEUMATIC HOIST
Gunnar C. Hansson, Stockholm, Sweden, assignor to Atlas Copco Aktiebolag, Nacka, Sweden
Filed Mar. 24, 1981, Ser. No. 247,068
Claims priority, application Sweden, Mar. 28, 1980, 8002408
Int. Cl.[3] B66D *1/08, 1/48, 3/24*
U.S. Cl. 254—269 11 Claims

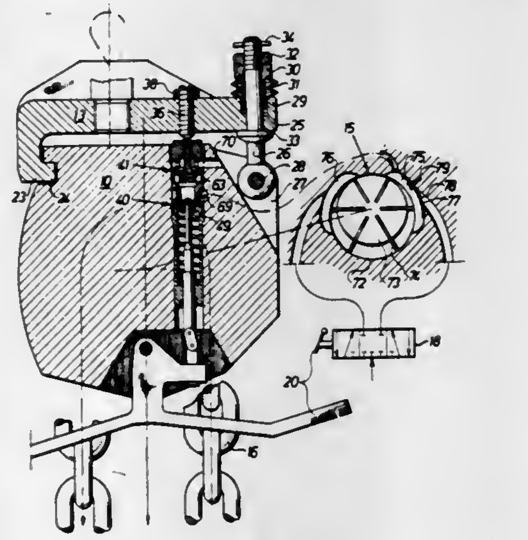

1. In a pneumatically operated hoist comprising a housing (10) provided with a suspension means (12, 13) for suspension

of the hoist, a pneumatically driven motor (15) provided with a first flow passage (75) arranged for serving as a pressurized air inlet during raising of a load and as an air exhaust passage during lowering of the load and a second flow passage (76) arranged for serving as an air exhaust passage during raising of the load and a pressurized air inlet during lowering of the load, a load engaging means (16, 17) drivingly connected to the motor (15), and control means (18) coupled to said motor for regulating air flow to and from the motor (15);

the improvement wherein:

said control means includes a flow restricting means (77, 78) provided in said first flow passage (75) and arranged for restricting flow through said first flow passage (75) during lowering of the load; and a load sensitive shunt valve (4) arranged for providing a second air exhaust passage (69, 70) during lowering of a load having a weight below a predetermined magnitude and for closing said second air exhaust passage (69, 70) during lowering of a load having a weight greater than said predetermined magnitude.

4,372,535
APPARATUS FOR ADJUSTING CABLE TENSION
David W. Gibson, Chester; Albert L. Hale, Berkeley Heights; Daniel L. Pope, Chester; Donald R. Rutledge, Budd Lake, and Kirk P. Wells, Glen Gardner, all of N.J., assignors to Bell Telephone Laboratories, Incorporated, Murray Hill, N.J.
Filed Aug. 25, 1980, Ser. No. 181,056
Int. Cl.[3] B66D *1/76*
U.S. Cl. 254—319 5 Claims

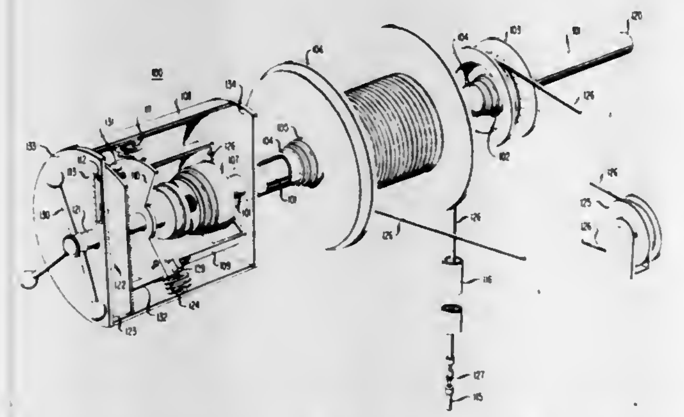

1. A capstan winch for pulling cable through conduit comprising

a source of rotary power, an overload clutch having a driving side connected to the source of rotary power and having a driven side, a winch line, a capstan connected to the driven side of the overload clutch for applying traction to the winch line, a slip clutch having a driving side connected to the source of rotary power and having a driven side, a take-up reel connected to the driven side of the slip clutch,

characterized in that

the capstan winch (100) includes means for measuring the torque applied to the capstan (103) and the take-up reel (106) comprising an inner drum (109) connected to the source of rotary power, a tension spring (111 or 124), an outer drum (108) concentric with the inner drum (109) and connected to the inner drum (109) by the tension spring (111 or 124), a disc (123) concentric with the inner drum (109) and connected to the inner drum (109), a window (112) in the outer drum (108), a pattern (122) on the disc (123) visible through the window (112), and a tube (104) connects the driving side of the overload clutch (102) and the driving side of the slip clutch (105) to the outer drum (108)

whereby the torque is indicated by the relative position of the pattern (122) with respect to the window (112).

4,372,536
TRAFFIC BARRICADE
Randall L. Morse, Waverly, Nebr., assignor to Trafcon, Inc., Lincoln, Nebr.
Filed Mar. 6, 1981, Ser. No. 241,251
Int. Cl.[3] E01F *13/00*
U.S. Cl. 256—64 2 Claims

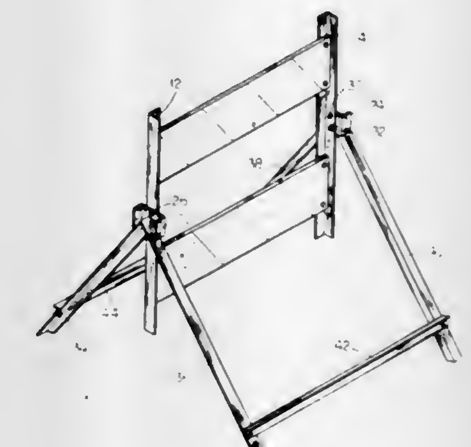

1. A portable barricade, comprising,

first and second frame members normally being vertically disposed and horizontally spaced with respect to each other and having upper and lower ends,

at least one barricade panel secured to and extending between said first and second frame members and normally dwelling in a vertical plane,

first and second legs, having upper and lower ends, pivotally secured at their upper ends to said first frame member,

third and fourth legs, having upper and lower ends, pivotally secured at their upper ends to said second frame member,

said first and second legs being selectively movable from a storage position wherein said first and second legs are substantially parallel to said first frame member to an operative position wherein said first and second legs extend downwardly and outwardly from said first frame member,

said third and fourth legs being selectively movable from a storage position wherein said third and fourth legs are substantially parallel to said second frame member to an operative position wherein said third and fourth legs extend downwardly and outwardly from said second frame member,

and means operatively interconnecting said legs and said frame members which maintains said frame members and said panel in their vertically disposed position when said legs are in their said operative position,

said means interconnecting said legs and frame members comprising channel-shaped members positioned between said legs and frame members,

each of said channel-shaped members comprising a vertically disposed base secured to the respective frame member and a pair of side walls extending outwardly from said base,

said legs being pivotally secured to said channel-shaped members and frame members below the connection of the associated channel-shaped member and frame members.

4,372,537
METHOD AND APPARATUS FOR THE REPLACEMENT OF BOTTOM CLOSURES OF TRACK-MOUNTED TRANSFER LADLES
Bernhard Dür, Oetwil am See, Switzerland, assignor to Metacon AG, Zurich, Switzerland
Filed Nov. 25, 1981, Ser. No. 324,948
Claims priority, application Fed. Rep. of Germany, Dec. 8, 1980, 3046194
Int. Cl.[3] C21B *3/00*
U.S. Cl. 266—45 8 Claims

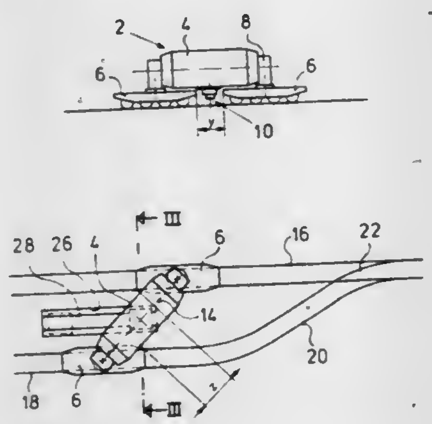

1. A method for the replacement of a bottom closure of a track-mounted pugh-type transfer ladle having a transfer container supported by two longitudinally spaced-apart bogies which are pivotally attached to the transfer container for swinging movement about a vertical axis, said transfer container having a removable bottom closure located between said bogies, said method comprising: moving the ladle longitudinally of itself and directing the two bogies on to different tracks which are spaced from each other to thereby swing the bogies relative to the transfer container and increase the longitudinal space bewteen the bogies; and replacing the closure from below through said increased space.

4,372,538
METAL CUTTING MACHINE WITH CUT PIECE PICKUP AND TRANSPORT MAGNETS
Fredrick J. Balfanz, Waukesha, Wis., assignor to C-R-O, Inc., Menomonee Falls, Wis.
Filed Jan. 5, 1981, Ser. No. 222,576
Int. Cl.[3] B23K *7/10*
U.S. Cl. 266—69 5 Claims

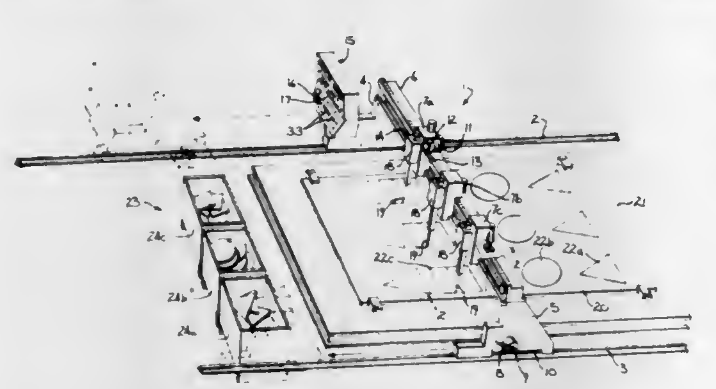

1. In a machine for cutting a plurality of separate pieces from a metal workpiece:
(a) longitudinally extending support means,
(b) a plurality of carriages adapted to be positioned adjacent the workpiece and movable in a transverse direction,
(c) cutting tools mounted on said carriages for forming a plurality of individual cut pieces from the workpiece,
(d) a transversely extending bridge adapted to be positioned adjacent the workpiece and movable along said support means, said carriages being mounted for movement along said bridge,
(e) a plurality of electromagnetic means comprising magnet assemblies mounted on said carriages for selectively picking up said cut pieces from said workpiece,
(f) means for moving said bridge and electromagnetic means from adjacent the workpiece to a station remote from the said workpiece,
(g) and means for activating said electromagnetic means for cut-piece pickup, and for de-activating said electromagnetic means for release of the cut pieces at said remote station.

4,372,539
RENEWABLE, STRAND CENTERING ANNEALER SHEAVE
Ralph E. Starnes, Jr., Carrollton, Ga., assignor to Southwire Company, Carrollton, Ga.
Filed Jun. 2, 1981, Ser. No. 269,176
Int. Cl.[3] C21D *9/62*; H05B *3/00*
U.S. Cl. 266—104 10 Claims

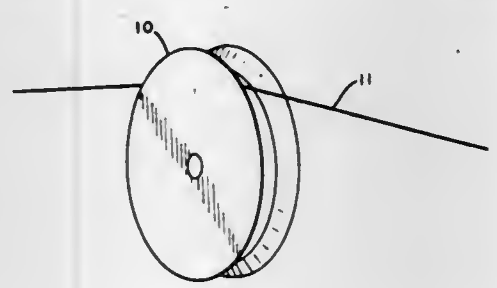

1. In a system for annealing strand of the type comprising at least two sheaves across which said strand passes and becomes electrically annealed, the improvement comprising:
a first flange member;
a second flange member concentric with said first flange member and adjacent thereto; and
an annealing band positioned between said first and second flange members and forming the bottom of a sheave groove;
further provided that said annealing band comprises an inward crowned central groove which physically guides said strand centrally.

4,372,540
APPARATUS FOR OXYGEN SPRINKLE SMELTING OF SULFIDE CONCENTRATES
Paul E. Queneau, Cornish, N.H. 03746, and Reinhardt Schuhmann, Jr., 1206 Hayes St., West LaFayette, Ind. 47906
Division of Ser. No. 971,995, Dec. 21, 1978, Pat. No. 4,236,915. This application Sep. 3, 1980, Ser. No. 183,963
Int. Cl.[3] F27B *9/00*; C22B *9/10*
U.S. Cl. 266—171 7 Claims

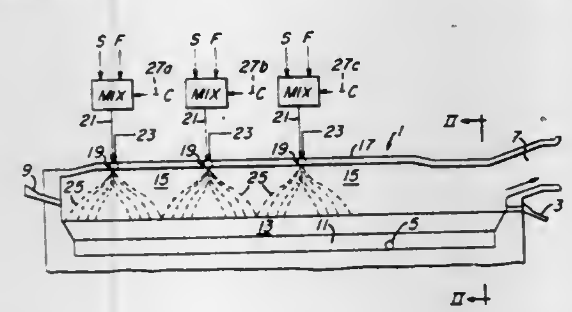

1. In a furnace of refractory material, for converting nonferrous metal sulfide concentrates to molten matte, with means to contain a charge of molten matte and a superimposed slag layer, means for discharging molten matte, slag and exhaust gases therefrom, and the furnace having a roof to enclose a hot

atmosphere in said furnace between the roof and slag layer, and having a plurality of burners for introducing metal sulfide concentrates, flux and oxygen-rich gas as paraboloidal suspensions therefrom, and means for introducing metal sulfide concentrate, flux and oxygen-rich gas to said burners, the improvement wherein said furnace is a horizontal elongated rectangular cross-section furnace having said means for discharging slag at one end thereof, and said plurality of burners are vertically disposed, in spaced relation, along the longitudinal axis of said roof at a location remote from said means for discharging slag, and said burners are so spaced from each other as to introduce said oxygen-rich gas and said concentrates into said hot atmosphere as a plurality of paraboloidal suspensions which form a pattern of broad, substantially contiguous ovals upon contact with the slag, whereby substantially uniform heat and mass distribution is effected over the major portion of said horizontal furnace and remote from said means for discharging slag.

4,372,541
APPARATUS FOR TREATING A BATH OF LIQUID METAL BY INJECTING GAS
Francois Bocourt, Sydney, Australia, and Henri Fetaud, Chambery, France, assignors to Aluminum Pechiney, Lyons, France
Filed Sep. 21, 1981, Ser. No. 303,868
Claims priority, application France, Oct. 14, 1980, 80 22193
Int. Cl.[3] C21C *5/48*
U.S. Cl. 266—220 15 Claims

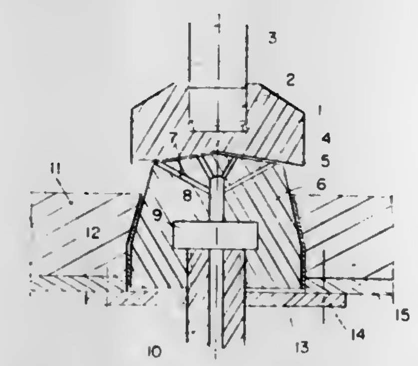

1. Apparatus for treating a bath of liquid metal by injection of a gas comprising a container for housing the liquid metal, a gas injection plug at the bottom of the container, an agitator mounted for rotational movement within the container, means mounting the agitator for vertical movement in the direction toward and away from the plug between rest position on the gas injection plug and raised position spaced from the gas injection plug responsive to gas emission from the plug, whereby the agitator is supported in raised position by a fluid bearing to enable rotational movement of the agitator in raised position while allowing a multitude of dispersed bubbles of the gas to escape through the space between the separated agitator and plug, and means for rotating the agitator about the axis.

4,372,542
COPPER SLAG TRAP
E. Henry Chia, Carrollton, Ga., assignor to Southwire Company, Carrollton, Ga.
Filed Jun. 19, 1981, Ser. No. 275,554
Int. Cl.[3] B22D *43/00*
U.S. Cl. 266—229 17 Claims

1. A copper slag trap for continuously trapping slag during transfer of molten copper from a melting means to a casting means comprising:
(a) a tundish having a bottom and sides adapted to receive a molten metal melt through a melt entrance and to maintain said melt as the melt flows through said tundish to a melt exit;
(b) a top member positioned above said tundish; and
(c) at least two melt flow obstacles situated above said tundish bottom, below said top member, and between said entrance and said exit, said obstacles being adapted to project into said melt flow in a predetermined pattern and alternately restrict and release said melt flow to induce

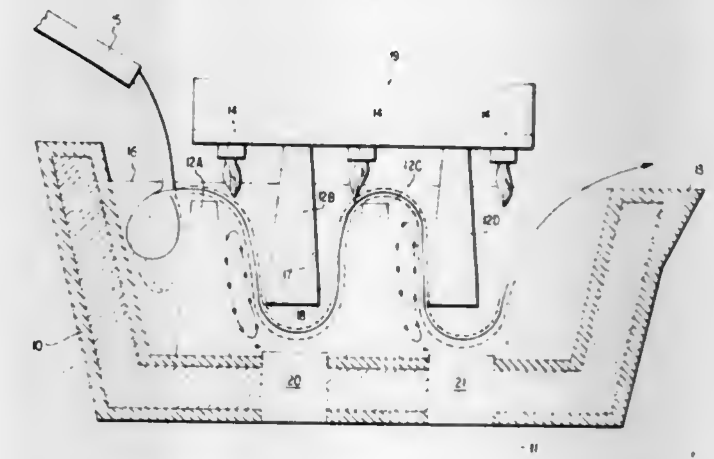

non-uniform flow patterns therein thereby causing slag particles trapped in the molten metal matrix to rise to the surface of the molten metal.

4,372,543
CUPEL
Philip M. Gardiner, P.O. Box 5, Parlin, Colo. 81239
Filed May 14, 1981, Ser. No. 263,601
Int. Cl.[3] F27B *14/10*; C22B *11/00, 13/00*
U.S. Cl. 266—275 9 Claims

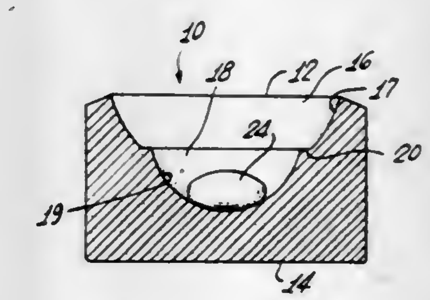

1. A cupel comprising a body in which there is a downwardly extending primary cavity, and disposed within said primary cavity, a downwardly extending secondary cavity which extends beyond the lowest extreme of said primary cavity, said primary cavity being substantially hemispherical, and said secondary cavity being substantially hemispherical and symmetrically disposed within said primary cavity.

4,372,544
BLAST FURNACE TROUGH AND LINER COMBINATION
Michael D. LaBate, 115 Hazen Ave., Ellwood City, Pa. 16117
Filed May 7, 1981, Ser. No. 261,678
Int. Cl.[3] C21B *3/00*
U.S. Cl. 266—281 10 Claims

1. An improvement in a blast furnace trough and liner combination for handling hot metal, the improvement comprising a replaceable and expendable liner and cushioning and insulating means supporting the same, said blast furnace trough including an open topped apertured metallic vessel, said replaceable and

expendable liner comprising a multi-layered mass coalesced by physical force with each of said multi-layers being of a differ-

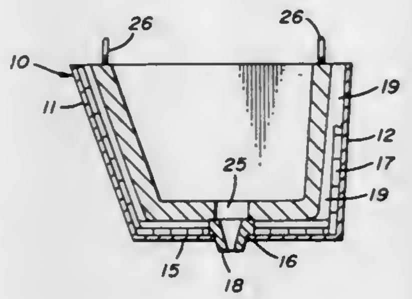

ent density and having a known predetermined lifetime when subjected to molten metal flowing thereover.

4,372,545

SHOCK ABSORBER FOR A VEHICLE WITH A FLEXIBLE SUSPENSION

Jean M. Federspiel, Paris, France, assignor to Commissariat a l'Energie Atomique, Paris, France

Continuation of Ser. No. 129,385, which matured from PCT/FR79/00008 Jan. 26, 1979, 102(e) date Aug. 15, 1979, abandoned. This application Aug. 13, 1981, Ser. No. 292,519

Claims priority, application France, Jan. 26, 1978, 78 02171; Dec. 12, 1978, 78 34901

Int. Cl.³ F16F *13/00, 9/19*

U.S. Cl. 267—8 R **6 Claims**

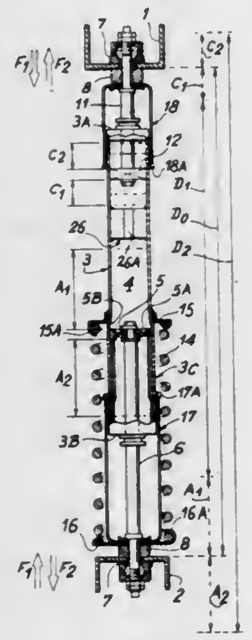

1. A hydraulic shock absorber for a vehicle with a flexible suspension, comprising:
a damping piston member slidably mounted in a first cylinder member containing a liquid immersing the damping piston member;
at least one return spring bearing simultaneously on said damping piston member and on said first cylinder member to maintain at rest the damping piston member in a predetermined position relative to the first cylinder member to allow the latter to effect a useful travel inside said first cylinder member in each direction;
a compensation piston member slidably mounted in a second cylinder member communicating with said first cylinder member and containing said liquid, said compensation piston member being immersed in said liquid, said predetermined position of the damping piston member being independent of the position of the compensation piston member;
at least one of said piston members being integral with a sliding rod traversing one end of said cylinder member in which said one piston member is slidably mounted;
means for compensating variations of an internal volume defined in said cylinder member resulting from sliding of said sliding rod into and out of said cylinder member;
one of said damping piston and first cylinder members being integral with one of said compensation piston member and second cylinder member, whereas, the other of said members are fixed respectively to a suspended part and an unsuspended part of the vehicle;
at least one passage extending through said compensation piston member, said passage being controlled by at least one sealing valve sensitive to a relative displacement speed between said parts of the vehicle to open said passage when said relative displacement speed is below a given limiting speed, in order to allow a displacement of said compensation piston member inside said second cylinder member when the load of the vehicle varies, and to seal said passage when said relative displacement speed exceeds said given limiting speed, in order to prevent said compensation piston member from moving inside said second cylinder member when the relative displacement between said parts of th~ vehicle should be damped, the location of said damping piston member relative to said first cylinder member being independent of the load of the vehicle.

4,372,546

SPRING ASSEMBLY

Henry R. Ramsey, Dudley, Mass., assignor to Webster Spring Co. Inc., Oxford, Mass.

Filed Mar. 23, 1981, Ser. No. 247,347

Int. Cl.³ F16F *3/02;* **A47C** *23/053*

U.S. Cl. 267—100 **14 Claims**

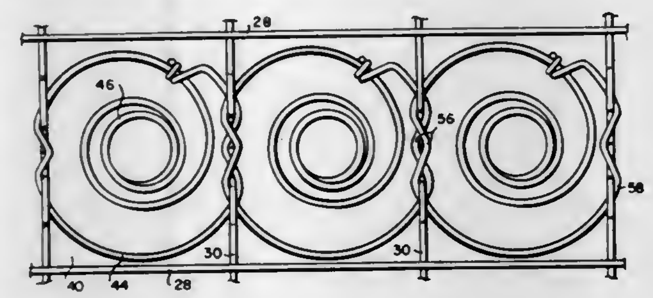

1. A spring assembly comprising a base frame, a grid frame comprising a border wire of rectangular configuration and transversely and longitudinally-extending, right-angularly crossing grid wires attached at their ends to the border wire, said crossing grid wires defining longitudinally and transversely-aligned openings and a plurality of helically-coiled springs attached at one end to the base frame and at their other ends to the grid wires in rows transversely of the grid frame within the openings defined by the crossing grid wires characterized in that the ends of the coiled springs attached to the grid wires comprise loops of larger diameter than the distance between the wires defining the openings within which the coils are positioned so that segmental portions of the end loops cross the grid wires in overlapping relation into the adjacent openings and wherein there is a deviation in one at least of the segmental portions of each coil which recrosses the grid wires in the opposite direction.

4,372,547

SHEET FEED APPARATUS

Nobuyuki Yanagawa, and Kenichi Mizuma, both of Tokyo, Japan, assignors to Ricoh Company, Ltd., Tokyo, Japan

Continuation of Ser. No. 88,986, Oct. 29, 1979, abandoned. This application May 18, 1981, Ser. No. 264,761

Claims priority, application Japan, Dec. 29, 1978, 53-165265; Dec. 29, 1978, 53-165266

Int. Cl.³ B65H *3/06, 3/56*

U.S. Cl. 271—10 **13 Claims**

1. A sheet feed apparatus including sheet support means for supporting a stack of sheets, a corner separator disposed at a

corner of the support means, a corner of the stack being aligned with the corner of the support means and a feed roller disposed adjacent to the corner of the support means for feeding a top sheet of the stack of sheets in a direction such that a leading edge of the top sheet is separated from the stack by the corner separator, characterized by comprising:
skew preventing means disposed upstream of the feed roller in the direction of movement of the top sheet for engaging with and preventing skew of the top sheet; and
a register roller disposed downstream of the skew preventing means in the direction of movement of the top sheet;
the skew preventing means comprising a skew preventing roller which is rotatable parallel to the feed roller;
the skew preventing roller being disposed between the feed roller and the corner separator in a direction perpendicular to the direction of movement of the top sheet;

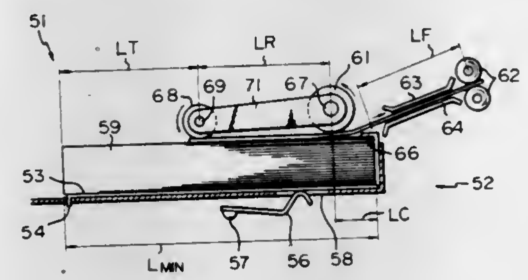

the apparatus being adapted to feed sheets from stacks of sheets of a plurality of sizes, the apparatus further being constructed in such a manner that $LT \geqq LF$, where $Lmin > LR + LC + LF$ and $Lmin = LT + LR + LC$, LR being a distance between the feed roller and the skew preventing roller, Lmin being a minimum length of the stack of sheets in the direction of movement of the top sheet which the apparatus is constructed to accommodate, LT being a distance between the skew preventing roller and a trailing edge of a stack of sheets of said minimum length, LC being a distance between the feed roller and a leading edge of the stack of sheets and LF being a distance between the leading edge of the stack of sheets and the register roller.

4,372,548

DEVICE FOR SEPARATING FLEXIBLE PLANAR MATERIAL

Horst Aurich, Karl-Marx-Stadt; Brigitta Bochmann, Lössnitz; Klaus Grosse, Berlin; Eberhard Köhler; Michael Nestler, both of Karl-Marx-Stadt; Hans-Christian Ochsenfarth, Mühlhausen, and Gerhard Seyfarth, Karl-Marx-Stadt, all of German Democratic Rep., assignors to VEB Kombinat Textima, Karl-Marx-Stadt, German Democratic Rep.

Filed Mar. 9, 1981, Ser. No. 241,887

Claims priority, application German Democratic Rep., Mar. 28, 1980, 220013

Int. Cl.³ B65H *3/22*

U.S. Cl. 271—18.3 **5 Claims**

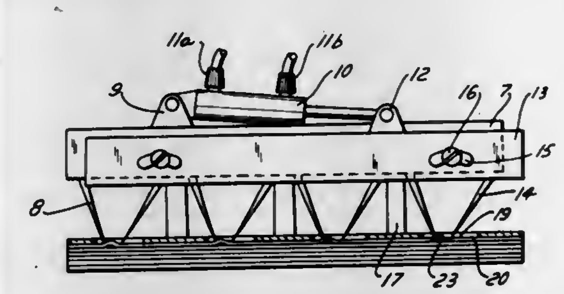

1. A device for separating a stack of planar material, piece by piece, comprising
(A) an immobile pin carrier,
(B) a series of pins affixed to said immobile pin carrier (A) at discrete intervals,
(C) a guiding element affixed to said immobile pin carrier (A),
(D) a mobile pin carrier,
(E) a series of pins affixed to said mobile pin carrier (D) at discrete intervals, said pins pointing downwardly toward the pins (B) of said immobile pin carrier (A) in a lateral direction and bent at a greater angle than the series of pins (B) of the immobile pin carrier (A), said series of pins (B) and (E) of both the immobile and mobile pin carriers (A) and (D) disposed in a common longitudinal vertical plane, and
(F) a hole on said mobile pin carrier (D) engaged with the guiding element (C) on said immobile pin carrier (B), said hole in the shape of a convex curved groove, whereby the mobile pin carrier (D) moves downwardly in the direction defined by the hole (F) and the guiding element (C) so that pins (E) grip a top layer of the stack forming a fold between pins (B) and (E), and the mobile pin carrier (D), following the direction defined by the hole (F) around the guiding element (C), is raised to reinforce formation of the fold in the top layer of the stack of planar material.

4,372,549

DEVICE AND A METHOD FOR WITHDRAWING ARTICLES IN THE FORM OF SHEETS FROM A STACK OF ARTICLES

Allan Stiernspetz, Björkö Nykil, Sweden, assignor to Datasaab AB, Jarfalla, Sweden

Filed Apr. 21, 1981, Ser. No. 256,172

Claims priority, application Sweden, Apr. 25, 1980, 8003174

Int. Cl.³ B65H *3/30*

U.S. Cl. 271—23 **7 Claims**

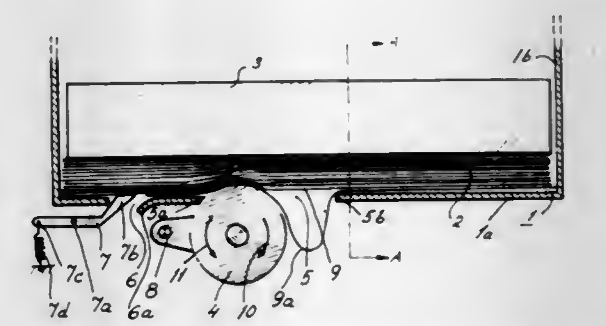

1. In a device for withdrawing articles individually from a stack of articles in the form of sheets, specifically banknotes, said devices including a magazine for receiving a stack of discrete articles in the form of sheets and having a bottom surface supporting said stack, a transverse width at least equal to the width of said articles, and a length at least equal to the length of said articles, said bottom surface defining two transverse openings each having a width at least equal to the width of said articles, and elongated roller means disposed in one of said openings and outside of the magazine for engaging an exposed article of the stack, said roller means being disposed to rotate first in one direction so that a bulge extending through said one opening is formed in said exposed article and thereafter in an opposite direction so that said exposed article is dispensed through the other opening, the improvements characterized by:
(a) the bottom surface of the magazine having the shape of a cylindrical segment adjacent to said one opening in a transverse direction, and
(b) the longitudinal contour of the roller means having the shape of a cylindrical segment complementary to that of the bottom surface of the magazine.

4,372,550
AIR FLOW DELIVERY SYSTEM
Kenneth D. Woods, 3158 Aurora Vista Dr., Spring Valley, Calif. 92077
Filed Apr. 30, 1981, Ser. No. 259,000
Int. Cl.³ B65H *31/00*
U.S. Cl. 271—211 **12 Claims**

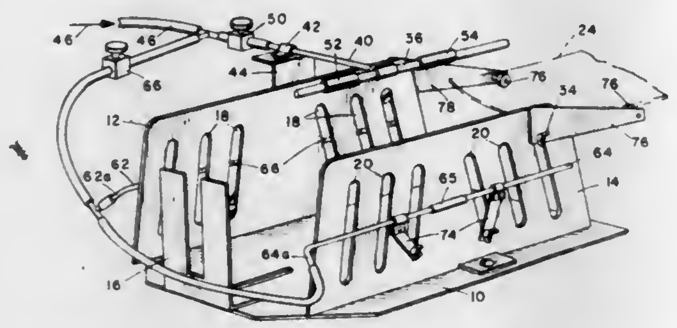

1. A sheet stacking system comprising in combination:
a sheet receiving chute disposed for receiving individual flat rectangular sheets moving in succession from a machine;
air support means including a plurality of upwardly directed air support jets disposed at each side of said chute for engaging the underside of the sheet along the side edges thereof for supporting a sheet during movement of the sheet into the chute; and
air pressure means for applying a continuous force on the upper surface along the center longitudinal axis of said sheet while said sheet is supported by said air support means during delivery into said chute for bending said sheet about its longitudinal axis for providing longitudinal support thereof and for rapidly forcing said sheet downwardly into said chute out of the way of succeeding sheets.

4,372,551
CARDIAC STRESS TABLE
Carl Yurdin, Port Washington, N.Y., assignor to Victoreen, Inc., Cleveland, Ohio
Filed Nov. 28, 1980, Ser. No. 211,266
Int. Cl.³ A63B *23/04, 69/6*
U.S. Cl. 972—73 **10 Claims**

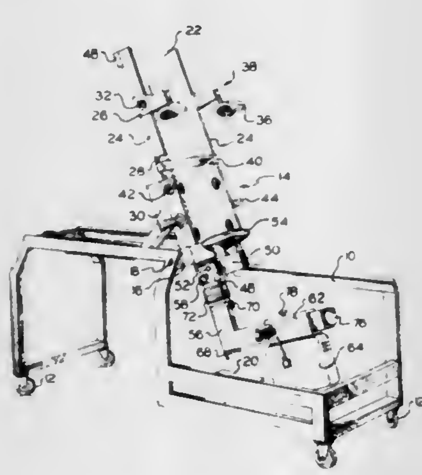

1. A cardiac stress table comprising:
a frame;
a one-piece patient supporting table including a back support and extending through a seat portion, means for retaining a patient on said table, and means supporting a stress imposing unit integral with and extending longitudinally from said table;
means for pivotally interconnecting said table to said frame permitting rotation of said table and said stress imposing means from a generally horizontal position to a generally vertical position to effectively move a supported patient from a sublime position to an upright position during periods of examination; and
means for selectively positioning and maintaining said table relative to said frame through approximately ninety degrees to achieve adjustment of said supporting table at any position from the horizontal position to the vertical position.

4,372,552
HANG STAND FOR UNLOADING OF BACKBONE DISCS
Rolf Carlmark, Box 756, S-892 00 Domsjö, Sweden
PCT No. PCT/SE80/00021, § 371 Date Sep. 25, 1980, § 102(e) Date Sep. 25, 1980, PCT Pub. No. WO80/01540, PCT Pub. Date Aug. 7, 1980
PCT Filed Jan. 24, 1980, Ser. No. 197,106
Claims priority, application Sweden, Jan. 26, 1979, 7900723
Int. Cl.³ A63B *23/02;* **A61H** *1/02*
U.S. Cl. 272—112 **8 Claims**

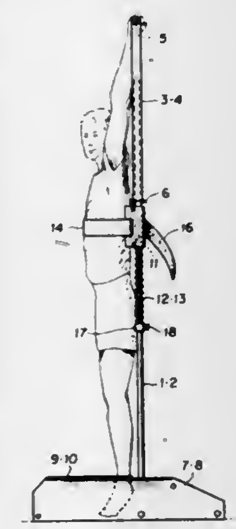

1. In a hang stand for unloading the back and opening the spaces for the discs of the backbone of a person, comprising:
a pair of spaced apart, vertically arranged elongated members (**1, 3; 2, 4**); means (**7-10**) for supporting said elongated vertical members; and an upper bar (**5**) carried by and extending between said elongated vertical members, said upper bar (**5**) being located at such a vertical level that, when a person grasps said upper bar (**5**) with both hands, the person can hang freely;
the improvement comprising the combination of:
a back support (**11**) coupled to and engaged with said elongated vertical members so as to be movable downwards in a vertical direction relative to said vertical members but immovable in a horizontal direction relative to said vertical members, said back support (**11**) being arranged and located to engage against a given part of the back of the user to horizontally and immovably support said given part of the back but to permit vertical, downwardly directed, movement of said given part of the back along with said downward vertical movement of said back support (**11**) relative to said vertical members when the user grasps said upper bar (**5**) and hangs freely from said upper bar (**5**) with said given part of the back engaged against said back support (**11**);
adjusting means for infinitely variably adjusting the vertical position of said back support (**11**) in relation to said elongated vertical members, said adjusting means including infinitely movable stop means (**17,18**) coupled to said elongated vertical members; and springs means (**12,13**) coupled between said stop means (**17,18**) and said back support (**11**) to return said back support to its original location after use; and
vertically raised foot support means (**9,10**) connected to said support means (**7-10**) and arranged at the lower portion of said hang stand and on which a user may step for exact location of said back support (**11**) and from which a user may step off to hang from said upper bar (**5**) freely but supported by said back support (**11**) and without his feet contacting the floor on which the hang stand rests.

4,372,553
WEIGHT LIFTING DEVICE AND METHOD OF EXERCISING
Frederick C. Hatfield, 502 Twenty-seventh St., Kenner, La. 70062
Filed Nov. 3, 1980, Ser. No. 203,417
Int. Cl.³ A63B *21/12*
U.S. Cl. 272—119 **13 Claims**

1. An exercising device for exercising the abdominal muscles of the user by causing the user to contract them, comprising:
a support frame;
a seat having seat back means mounted on said support frame and against which the user sits and is supported for putting the abdominals on stretch before contracture of the abdominals which occurs during the exercising, said seat back means comprising a posteriorly curved, firm seat back which is substantially curved in the area where the user's spine is located causing the user's back to be hyperextended by being curved backwardly a significant amount when seated in the device;
force resistance means associated with said support frame for resisting but allowing the forward movement of the user in said seat when the user moves forwardly away from said seat back means to cause the abdominals to be contracted; and
moveable shoulder area connection means directly connected to said force resistance means for directly connecting the upper body, shoulder areas of the user to said force resistance means and for applying the force resistance of said force resistance means directly to the upper body, shoulder areas of the user in a direction opposite to the user's movement away from said seat back means but allowing the user to move forwardly against the force resistance.
10. The method of exercising the abdominal muscles of the body, comprising the following steps:
(a) providing an exercising device, including
a support frame;
a seat having seat back means mounted on said support frame, said seat back means comprising a posteriorly curved, firm seat back in the area where the user's spine is located during use;
restraining strap means associated with said support frame and said seat back means;
force resistance means associated with said support frame; and
shoulder area connection means connected to said force resistance means;
(b) sitting in said seat and strapping said restraining strap means to firmly hold the user's posterior back against said curved seat back and toward its base at least generally isolating the abdominals from the hip flexor muscles, and directly connecting said shoulder area connection means directly to the shoulder area of the upper body to apply the force resistance of said force resistance means in a direction directly opposite to any movement away from said seat back means;
(c) leaning back against said curved seat back putting the abdominals in stretch before exercising; and
(d) cyclically moving the upper torso forwardly away from said seat back against the resisting force of said force resistance means and then back again, thereby exercising the abdominals, the abdominal muscles contracting concentrically to move the spine from spinal hyperextension, through extention, to flexion, then contracting eccentrically to move the spine from flexion, back through extention and back to hyperextension.

4,372,554
ELECTRONIC QUESTION AND ANSWER GAME
Henry Orenstein, 136 Lakeside Ave., Verona, N.J. 07044
Filed Feb. 6, 1980, Ser. No. 118,992
Int. Cl.³ A63F *9/18*
U.S. Cl. 273—1 E **1 Claim**
MICROFICHE APPENDIX INCLUDED
(2 Microfiche, 86 Pages)

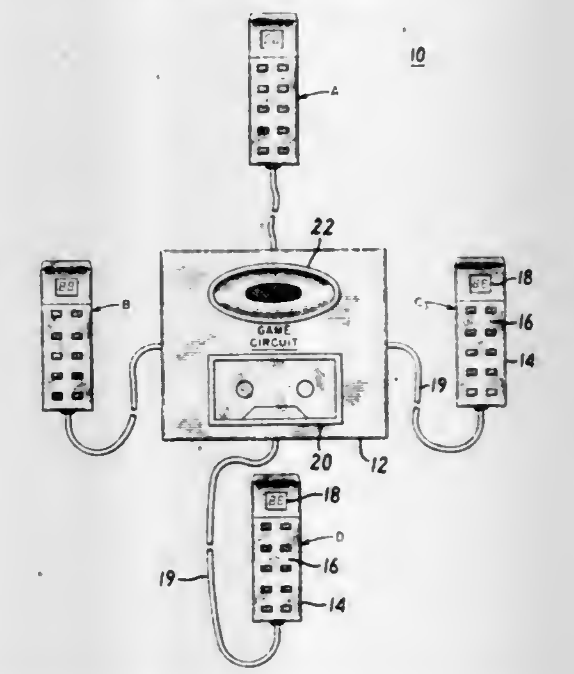

1. A multiple-player game apparatus, comprising:
a magnetic tape having recorded thereon sound signals, game program signals and location signals;
a magnetic tape playing apparatus having a tape motor for transporting said tape past a magnetic signal transducer, said tape motor being operative in response to motor control signals, said player providing output signals representative of said recorded sound signals, game program signals and location signals;
sound output apparatus responsive to supplied audio signals for providing a sound output;
a relay, responsive to output control signals, for selectively supplying said output sound signals or generated audio signals as audio signals to said sound output apparatus;
a plurality of keyboards, one for each of said multiple players, for generating input signals in response to key operations;
a plurality of alphanumeric display units, one for each of said multiple players, responsive to supplied numeric output signals;
a read-only-memory having a master system program;
a random access memory;
and a microprocessor, coupled to said read only memory, said random access memory, said tape playing apparatus, said sound output apparatus, said relay, said keyboards and said display units, said microprocessor being operative in response to said master system program to:
(1) supply motor control signals to said tape motor;
(2) store in said random access memory game program

signals supplied by said magnetic tape playing apparatus;

(3) operate under said master program and said stored game program to supply output control signals to said relay to cause said relay to supply said output sound signals to said sound output apparatus;

(4) operate, under said control program and said game program, and in response to said position signals supplied by said tape playing apparatus, to supply motor control signals to said tape motor to stop said tape motor at selected tape positions;

(5) operate under said control program and said game program, and in response to said input signals from said keyboards, to supply numeric output signals to said display units;

(6) operate under said control program and said game program, and in response to said input signals from said keyboards, to supply motor control signals to said motor to start said motor;

(7) operate, under said control program and said game program, and in response to said input signals and said position signals, to supply output control signals to said relay to cause said relay to supply selected portions of said sound signals to said sound output apparatus; and

(8) operate, under said control program and said game program, in response to said input signals and said position signals, to generate audio signals and to supply output control signals to said relay to cause said relay to supply said generated audio signals to said sound output apparatus.

4,372,555
BASKETBALL BACKBOARD
Roald H. Sorensen, 3224 Marie Dr., Raleigh, N.C. 27604
Filed Oct. 9, 1981, Ser. No. 310,062
Int. Cl.³ A01B *63/08*
U.S. Cl. 273—1.5 R **10 Claims**

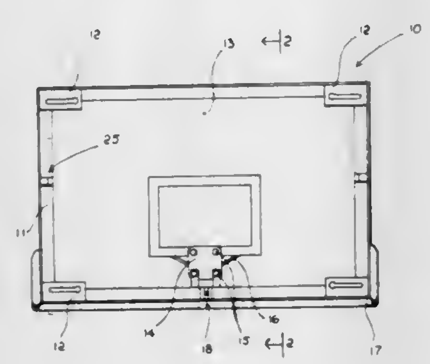

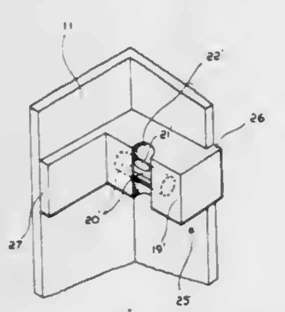

1. An improved basketball backboard generally vertically disposed above a playing surface and having end portions of the improvement, comprising: a first alignment indicating means secured adjacent one of said ends of said backboard; a second alignment indicating means secured adjacent the opposite end of said backboard from said first alignment indicating means; and means for adjusting the disposition of said backboard relative to said playing surface whereby both proper vertical alignment of said backboard as well as elimination of internal stress created by twist mounting and similar stress related conditions within said board can be eliminated.

4,372,556
ELECTRONIC SOCCER GAME
Michael D. Minkoff, Torrance, and Richard S. Chang, Rolling Hills Estate, both of Calif., assignors to Mattel, Inc., Hawthorne, Calif.
Filed Aug. 8, 1980, Ser. No. 176,307
Int. Cl.³ A63F *9/00*
U.S. Cl. 273—85 G **13 Claims**

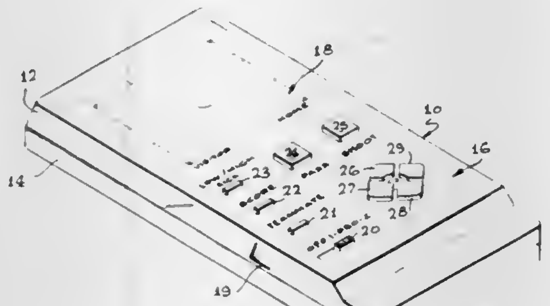

1. An electronic game comprising:

means for simulating a playing field having indications arranged in a matrix of rows and columns representing offensive and defensive players and a ball;

means for initiating a pass of the ball by a first offensive player along a path beginning at a first indication and designated to end at a second indication if the ball is not intercepted or received;

means for designating the pass as a low pass or a high pass;

means for causing a defensive player to intercept the ball in a pass designated as a low pass if the defensive player and the ball are coincident at any indication along the path of the pass;

means for causing a defensive player to intercept the ball in a pass designated as a high pass only if the defensive player and the ball are coincident at the first indication or at the last indication, whereby the ball is capable of being intercepted only when it first leaves the possession of the first offensive player or only when it reaches the end of travel of the pass;

means for causing a second offensive player to receive the ball in a pass designated as a low pass if the second offensive player and the ball are coincident at any indication along the path of the pass; and

means for causing a second offensive player to receive the ball in a pass designated as a high pass only if the second offensive player and the ball are coincident at the first indication or at the last indication, whereby the ball is capable of being received only when it first leaves possession of the first offensive player or only when it reaches the end of travel of the pass.

4,372,557
ELECTRONIC BASEBALL GAME
Robert M. Del Principe, Hawthorne, and David A. Reichert, Carson, both of Calif., assignors to Mattel, Inc., Hawthorne, Calif.
Filed Jan. 2, 1981, Ser. No. 222,094
Int. Cl.³ A63F *9/00*
U.S. Cl. 273—88 **5 Claims**

1. An electronic baseball game comprising a display having indicia representing a ball, a pitcher pitching the ball, and a batter swinging a bat; first input means responsive to operator control for assigning predetermined pitcher characteristics and for causing the pitcher to pitch the ball; second input means responsive to operator control for causing the batter to swing at the ball; and control means responsive to the first and second input means and including means for controlling the display indicia to simulate pitching, batting and movement of the ball, contact determining means for determining if the batter's swing causes the bat to contact the pitched ball, pitcher control means responsive to the contact determining means for altering one of the predetermined pitcher characteristics if the ball is contacted by the bat said characteristic including pitcher arm

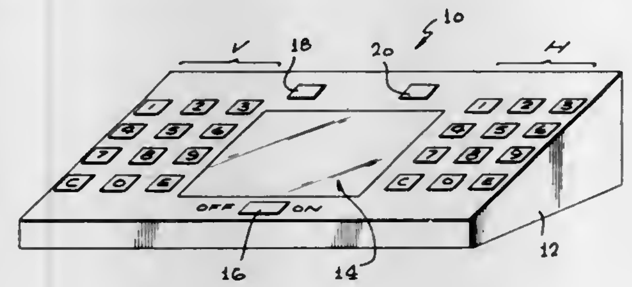

strength, and hit control means for determining the probability that the contacted ball is a successful hit as a function of the altered pitcher characteristic.

4,372,558
REMOTE GAME APPARATUS
Takeshi Shimamoto, Ashiya; Kazuo Arai, Neyagawa, and Kazutsugu Kobayashi, Takatsuki, all of Japan, assignors to Matsushita Electric Industrial Co., Ltd., Osaka, Japan
Filed Nov. 20, 1979, Ser. No. 96,175
Claims priority, application Japan, Nov. 21, 1978, 53-144839; Nov. 22, 1978, 53-144821
Int. Cl.³ A63F *3/00;* **H04M** *11/06*
U.S. Cl. 273—238 **7 Claims**

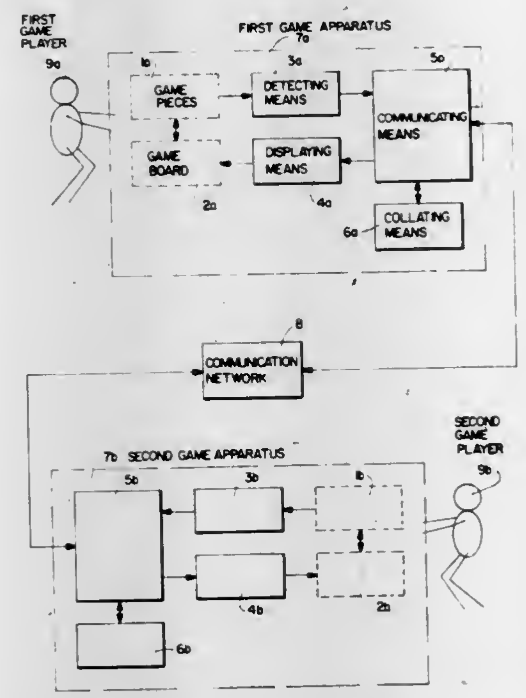

1. A remote game apparatus that enables players present at remote places to play a game by communicating via a common communication network, comprising:

detecting means for detecting a moved arrangement of a game piece on a game board and for providing a coded data signal;

communication means for communicating said coded data signal between two identical apparatus via said communication network;

displaying means for displaying a moved arrangement of a game piece in response to said received coded data signal; and

collating means for collating the coded data signal, supplied from the detecting means by a reproductive action of a game player performed by watching the display of said displaying means, with the coded data signal received by said communication means, and for displaying the result of the collation.

4,372,559
EDUCATIONAL GAME FOR STUDENT AND/OR GRADUATE NURSES
Ann Summers, 650 Huntington Ave., Boston, Mass. 02115
Continuation-in-part of Ser. No. 956,037, Oct. 30, 1978, abandoned. This application Dec. 8, 1980, Ser. No. 214,226
Int. Cl.³ A63F *3/00*
U.S. Cl. 273—243 **1 Claim**

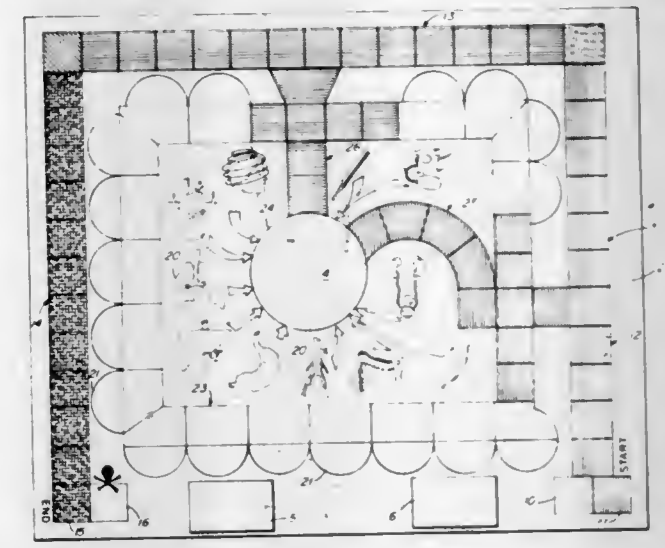

1. Means for learning, reinforcement, or updating knowledge through review for all levels of nurses from student nurses through graduate nurses in all academic preparations by means of a board game to be used by players who are said nurses comprising in combination a board having (1) a sequential path of spaces the sequence whereof passes through three levels of illness: Acute, Intermediate and Convalescence, (2) visualizations of body organs affected by wrongly chosen alternatives and of abnormalities of temperature and blood pressure and (3) designated areas for hospital departments, including an Admitting Office at the start of said sequence and a Discharge Office at the end of said sequence, each of said levels being indicated by printed matter on said board which designates certain spaces as Acute, certain spaces in Intermediate and certain spaces as Convalescence, the placement of said printed spaces being analogous to and vividly suggestive of the progress of a real patient; a plurality of playing pieces representing clients of said players; a multiplicity of admission playing cards having printed thereon information on certain aspects of a client's illness and alternatives for dealing with them, so that only a correct selection of alternatives will entitle a player to place her playing piece on the board at said Admitting Office, which is located so as vividly to suggest the location of a real admissions office; and a multiplicity of intervention playing cards having printed on one side thereof information on certain other aspects of a client's illness and alternatives for dealing with them, and having printed on the other side thereof (a) consequences of a correct selection of alternatives which direct the player to move playing piece on the board so that it progresses along said sequence toward said Discharge Office, and (b) consequences of an incorrect selection of alternatives which direct the player to impede such progress in a manner correlated to and vividly suggestive of the actual real-life consequence of that particular incorrect alternative, said printed matter on said intervention cards being correlated to the areas on said board and to the actual areas of a real hospital.

4,372,560
THERAPEUTIC GAME
John I. Antonius, 3848 SW. 36th Pl., Portland, Oreg. 97221
Filed Jul. 16, 1981, Ser. No. 283,952
Int. Cl.³ A63B *71/00;* **A63F** *9/02*
U.S. Cl. 273—408 **5 Claims**

1. A game comprising:

an elongate barrier and spaced means supporting opposite

extremities of the barrier in an elevated position which is at or above knee level of a participant in the game, such barrier establishing a forward facing position in a player's station located between the means supporting the ends of the barrier,

a target mounted in an elevated position beyond one end of said barrier thus to be spaced laterally to one side of a participant having said forward facing position in said player's station,
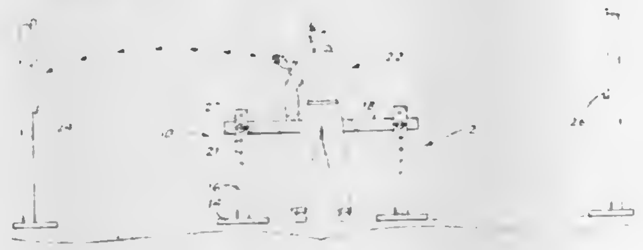
another target mounted in an elevated position beyond the other end of the barrier thus to be spaced laterally to the other side of a participant having said forward facing position in said player's station, and

a hand-graspable missile adapted to be thrown by a participant having said forward facing position in said player's station alternatively toward said one target and said other target.

4,372,561
VOLLEYBALL PRACTICE APPARATUS
Steven R. Morgan, Ogallala, and Linda A. Carlson, North Platte, both of Nebr., assignors to Volleyball World, Inc., Ogallala, Nebr.
Filed Sep. 21, 1981, Ser. No. 303,847
Int. Cl.³ A63B *69/22*
U.S. Cl. 273—411 **15 Claims**

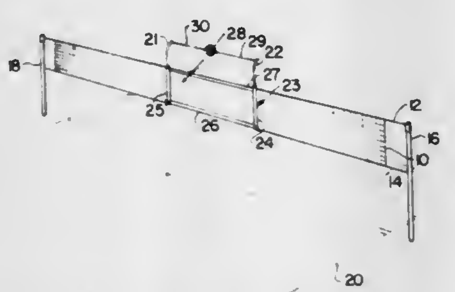

1. Volleyball practice apparatus comprising,

a pair of upright arms,

support means adapted to mount said arms adjacent a volleyball net in spaced apart relation to one another and each having a top end portion spaced above the volleyball net,

a pair of elongated cord members each having one end adapted to be secured one to the top end portion of each said arm,

flexible harness means adapted to receive and retain a volleyball,

said harness means having attachment means associated therewith on substantially diametrically opposed sides of a volleyball received therein, said attachment means being adapted to have the other ends of said cord members attached thereto to support said harness and a volleyball received therein above and spaced from one side of the top of the volleyball net,

said cord members being elastically extensible to permit a volleyball supported in said harness to be projected across the net and having sufficient elastic resilience to return the ball back across the net.

4,372,562
INFLATABLE PACKER WITH LIQUID RESIN ANCHORED REINFORCING SHEATH
Ernest E. Carter, Jr., Duncan, Okla., assignor to Halliburton Company, Duncan, Okla.
Filed Sep. 9, 1981, Ser. No. 300,507
Int. Cl.³ F16J *15/46;* E21B *33/12*
U.S. Cl. 277—34 **12 Claims**

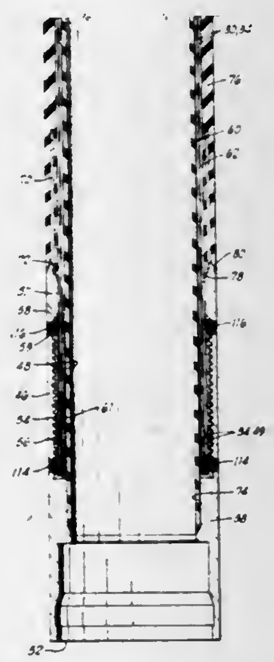

1. An inflatable packer element, comprising:

an inflatable bladder means including a reinforcing element;

an end shoe including an annular anchor means, said anchor means including a roughened cylindrical inner surface concentrically disposed about an end portion of said reinforcing element and including a radially inward projecting annular shoulder located longitudinally inward of said roughened cylindrical inner surface;

a hardened ring formed from a liquid adhesive, said ring having said end portion of said reinforcing element embedded therein, said ring having a radially outer surface conforming to and bonded to said roughened cylindrical inner surface of said anchor means, and said ring having a longitudinally inner end engaging said shoulder of said anchor means, so that when a tension load is placed on said reinforcing element a portion of said load is transferred by said ring in compression against said shoulder of said anchor means and;

wherein a radially inner cylindrical surface of said hardened ring is free from any load bearing attachment to said end shoe, so that substantially all of said tension load on said reinforcing element is transferred by said hardened ring to said roughened cylindrical inner surface and said shoulder of said anchor means.

4,372,563
PACKING SUPPORT FOR MOUNTING A WELL CASING PACKING
Robert J. Diehl, Wallis, Tex.; William L. Godare, Rohnert Park, Calif., and Frederic D. Wells, Shreveport, La., assignors to W-K-M Wellhead Systems, Inc., Shreveport, La.
Filed Oct. 26, 1981, Ser. No. 315,275
Int. Cl.³ F16J *15/06;* E21B *33/12*
U.S. Cl. 277—117 **5 Claims**

1. A support ring device adapted to be mounted in sleeved relationship to a casing or mandrel, said support ring device comprising:

an anchor ring member of a general cylindrical configuration and having an externally threaded wide diameter portion and with a plurality of threaded bores located circumferentially about said anchoring ring member and extending radially therein from the external surface of said anchor ring member to the interior thereof, said radial bores adapted to receive set screws therein which may be used to secure said anchor ring member to said casing;

a plurality of upwardly extending fingers on the upper end of said anchor ring member which are disposed circumferentially about the ring member, each of said fingers being provided with gripping means on a portion of its inner surface and an external surface which is of frusto-conical configuration convergent toward the upper end of said anchor ring member and extending to the end of each said finger, said external frusto-conical surfaces having a common conical axis;

a retainer ring member having a central axial bore with internal threads in the lower end portion of said bore whereby said retainer ring member is adapted for threading engagement with the externally threaded surface of said anchor ring member, said retainer ring having an upper bore portion defined by an internal frusto-conical surface which is convergent inwardly toward the upper

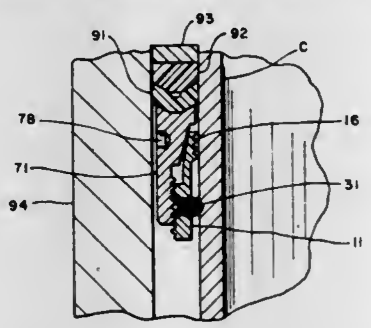

end of the retainer ring, said internal frusto-conical surface being defined by a cone angle slightly larger than the cone angle which defines the external frusto-conical surfaces of said fingers and having a circular diameter at its widest end which exceeds the diametral distance between the frusto-conical surfaces on the exteriors of the finger tips whereby said fingers are receivable within the conical bore section of the retainer ring member as defined by said fruso-conical surface and said internal frusto-conical bore surface is adapted to engage said external frusto-conical surfaces of the fingers as the retainer ring member is threaded onto said anchor ring, said internal frusto-conical bore surface acting to wedge said fingers inwardly as said retainer member is threaded onto said anchor ring whereby said fingers are movable into gripping engagement with a casing disposed within said ring support device, and such support ring device having an annular upwardly facing surface provided by the upper end of said retainer ring member for supporting an apparatus on said casing.

4,372,564
GASKETS FOR CYLINDER HEADS
Terence P. Nicholson, Calf Hall, Muggleswick, Derwentside, County Durham, England
Filed Apr. 22, 1982, Ser. No. 370,923
Claims priority, application United Kingdom, May 1, 1981, 8113496
Int. Cl.³ F16J *15/08*
U.S. Cl. 277—235 B **3 Claims**

1. A gasket for sealing the joint between the cylinder block and the cylinder head of a wet liner internal combustion engine comprising a pair of outer metal plates having outwardly directed corrugations formed therein away from cylinder bore openings and a composite metal spacer plate disposed between the two outer plates, the metal spacer plate comprising a central soft metal layer and hard metal surface layers and having around each cylinder bore opening and between the outer metal plates a metal washer formed on each axial face with circumferential serrations of V-shaped profile, the thickness of the washer measured over the peaks of the corrugations being somewhat greater than that of the spacer plate whereas the thickness measured between the troughs of the serrations is significantly less than that of the spacer plate, the said outer and central metal plates having their edges spaced away from the individual cylinder bore openings whereas the serrated

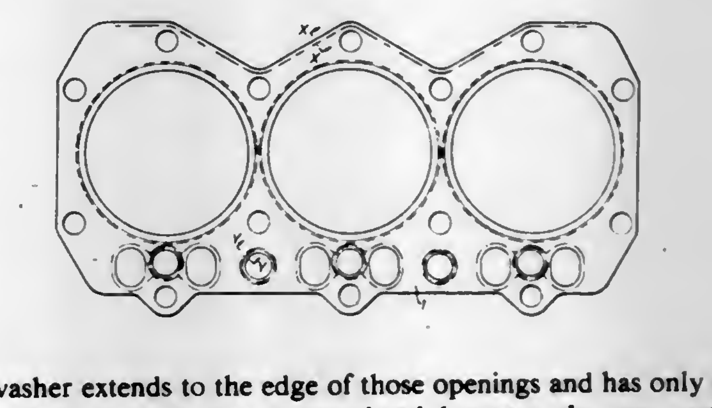

washer extends to the edge of those openings and has only its radially outer part accommodated between the two outer metal plates.

4,372,565
SOFT METAL SEAL
Neil C. Lien, Evansville, Wis., assignor to Baker Manufacturing Company, Evansville, Wis.
Filed Mar. 17, 1981, Ser. No. 244,606
Int. Cl.³ B21D *39/00;* F16L *23/00*
U.S. Cl. 277—236 **8 Claims**

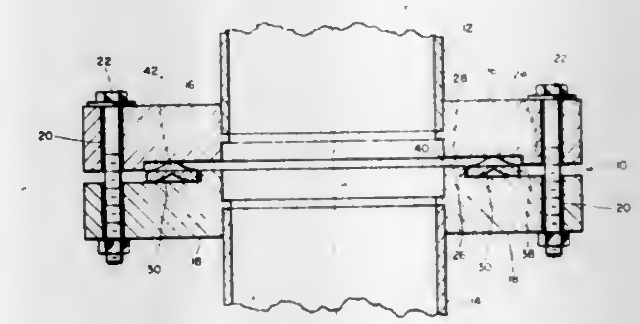

1. A high pressure seal for sealing between first and second vacuum system elements comprising:

an annular deformable metallic sealing member which has a central ridge formed in it in its undeformed condition and which is held pressed between the elements in a flattened condition, the sealing member being deformed in its flattened condition to substantially conform to the shape of the cavity between the elements and to substantially fill the cavity, the sealing member having a pair of faces and inner and outer sealing edges,

a sealing shoulder formed on each of the elements arranged so as to abut and seal against a respective one of the sealing edges on the sealing member, and

one of the group composed of the sealing member and the two elements having at least one channel formed therein to allow any fluid confined by the ridge in the sealing member between the sealing member and a one of the elements to be drawn into the interior of the elements to avoid the possibility of later outgassing from the confined fluid.

4,372,566
MOLDED BASE PLATE FOR ROLLERSKATES ATTACHABLE TO SHOES
Richard D. Smith, 28640 Vista Madera, San Pedro, Calif. 90732
Continuation of Ser. No. 140,131, Apr. 14, 1980, abandoned.
This application Sep. 18, 1981, Ser. No. 303,362
Int. Cl.³ A63C *17/02*
U.S. Cl. 280—11.19 **2 Claims**

1. As an article of manufacture in combination, a base plate

or chassis plate for carrying roller skate wheels and constructed for securement of a shoe to the base plate, wheel carrying chassis frames secured to the chassis plate, the chassis plate having a generally flat upper surface, the chassis plate having vertical bores normal to said surface spaced from each other, securing members for securing said wheel carrying chassis frames to the plate, said bores having counterbores at their upper ends for receiving said securing members, the said member having parts flush with the upper surface of the plate,

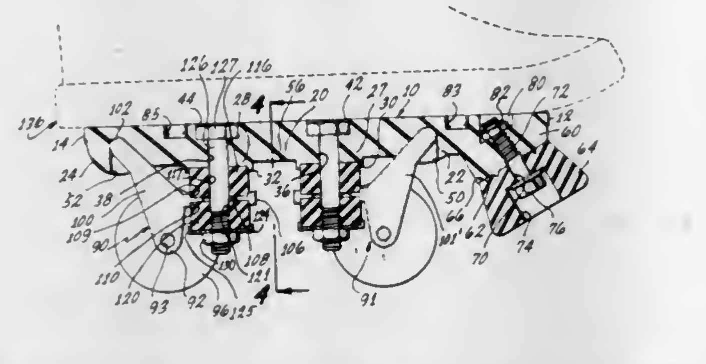

there being a single bore for securement of each chassis frame, the chassis frames having angularly extending brace members which extend outwardly at an inclined angle from the wheel axes; downwardly facing recesses formed in the chassis plate configurated to receive the ends of the brace members, said recesses having a longitudinally elongated opening on the lower surface of the chassis plate and having internal surfaces therein for ends of the brace members to abut against, said surfaces having a shape whereby a core member in a mold can be removed relatively in a direction normal to the base plate.

4,372,567
ANTI-ROLLING SYSTEM FOR SNOWMOBILE OF SMALL SIZE
Toshihiro Yasui, and Wayne L. Warnke, both of Coon Rapids, Minn., assignors to Yamaha Hatsudoki Kabushiki Kaisha, Iwata, Japan
Filed Dec. 17, 1980, Ser. No. 216,645
Int. Cl.³ B62B *17/04*
U.S. Cl. 280—21 R **6 Claims**

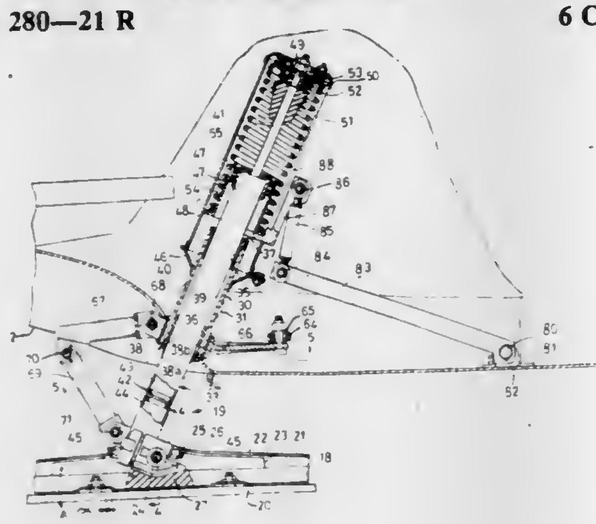

1. A suspension system for the steering skis of a snowmobile or the like comprising suspension means for suspending each of the skis for movement in a generally vertical direction relative to the body of the snowmobile, means for supporting each of the skis for steering movement about a respective steering axis, said suspension means including a pair of elements each associated with a respective of the skis, each of said elements being movable vertically with the respective ski during suspension movement and fixed against rotation about the respective ski steering axis for steering movement of the respective ski without corresponding rotation of the element about the steering axis, a torsion bar carried by the snowmobile and extending transversely across the body of said snowmobile, and means for torsionally loading the torsion bar upon movement of the respective suspension elements relative to each other upon vertical suspension movement of the skis without effecting loading of the torsion bar upon steering rotation of the ski including means for providing a pivotal connection between each of said elements and said torsion bar.

4,372,568
LUGGAGE AND ACCESSORY TRAILER
James H. Campbell, Bloomfield Hills, Mich., assignor to Spare Trunk Corporation, Southfield, Mich.
Filed Oct. 20, 1980, Ser. No. 198,310
Int. Cl.³ B62D *63/06*; B60D *1/06*
U.S. Cl. 280—63 **10 Claims**

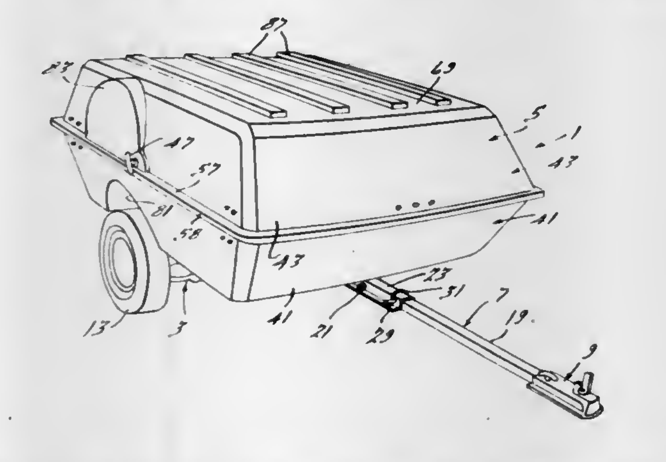

1. A small, light-weight, utility trailer for use with a small automobile to carry luggage and accessories and the like which are ordinarily carried in the trunk of an automobile comprising a closed container type trailer body having upper and lower clam shell type sections sized to substantially fit within the silhouette of said small automobile, means for removable securing the upper clam shell section to the lower clam shell section so that it can be easily detached from the lower section, a chassis including a frame and a pair of wheels resiliently mounted on the frame, means securing the lower clam shell section to the frame, said chassis including a tongue for removable attachment to the rear of a small automobile, said tongue having separate front and rear sections, means for selectively connecting the front and rear tongue sections together in alignment for operative attachment to the rear of an automobile and for movement of the front section relative to the rear section to reduce the overall length of the tongue when it is desired to store the trailer, means for supporting the lower clam shell section and the chassis in a vertical position with the tongue extending vertically upward when it is desired to store the trailer said upper clam shell section being wider on the inside than the external width of the chassis across the wheels whereby for trailer storage it can be nested over the underside of the chassis and wheels when the chassis and lower section are in said vertical position, and bracket means attachable to said tongue for removably attaching the upper clam shell section in said vertical position to the chassis and lower clam shell section.

4,372,569
SINGLE WHEEL TRAILER SUPPORT
Robert C. Otterson, 11185 S.W. Foothill Dr., Portland, Oreg. 97225
Filed Aug. 8, 1980, Ser. No. 176,465
Int. Cl.³ B62D *61/00*
U.S. Cl. 280—78 **5 Claims**

1. Single wheel apparatus for supporting a vehicle-towed trailer, said apparatus comprising:

an elongate substantially horizontal swivel member and swivel means for mounting the swivel member on the trailer for swiveling of the member about an upright axis,

an elongate arm assembly and pivot means mounting the assembly adjacent its upper end on said swivel member, at a region intermediate the ends of the swivel member, for swinging of the arm assembly about a horizontal swing axis, the assembly including at least one elongate arm depending downwardly from said pivot means, said arm assembly further including an elongate spring-mounting member disposed under and spaced from the swivel member and joined to said arm between its ends, said swivel and spring-mounting members extending longitudinally in the trailer and having opposite end regions disposed forwardly and rearwardly of said swing axis,

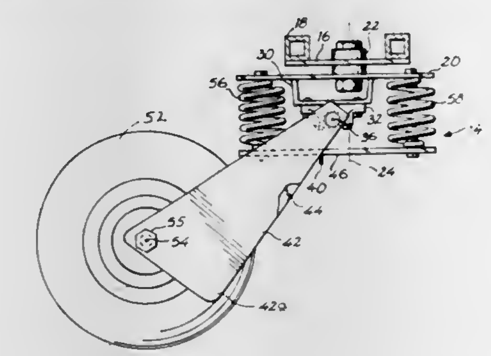

a wheel mounted on said assembly adjacent the lower end thereof for rotation about a rotation axis substantially paralleling said swing axis and disposed rearwardly of said swivel axis,

compression spring means interposed between said swivel member and said spring-mounting member, located rearwardly of said swing axis, operable to urge said assembly in one direction about said swing axis, and

tension spring means interposed between said swivel member and said spring-mounting member, located forwardly of said swing axis, operable to urge said assembly in said one direction about said swing axis.

4,372,570
SPRAY-INHIBITING MEANS FOR USE ON A ROAD VEHICLE
Maurice Goodall, Burton-on-Trent, England, assignor to Maurice Goodall (Holdings) Limited, Staffordshire, England
Filed May 19, 1980, Ser. No. 151,207
Claims priority, application United Kingdom, May 23, 1979, 7917900; Aug. 11, 1979, 7928041
Int. Cl.³ B62B *9/16*
U.S. Cl. 280—154.5 R **4 Claims**

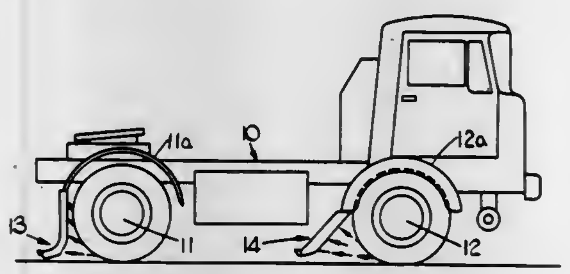

1. A spray-inhibiting attachment for mounting behind the wheel of a vehicle, said attachment comprising:

(a) a downwardly extending hollow housing having a forwardly disposed portion and with the latter forming an inlet opening for receiving therethrough water and the like thrown rearwardly from the vehicle wheel,

(b) said housing also having a rearwardly disposed wall portion spaced from and generally parallel to said forwardly disposed portion and with said portions being joined by side members to form a chamber for downward passage of water therein,

(c) said forwardly disposed portion merging at its lower end into a bottom wall member which is adapted to be positioned closely adjacent the road surface,

(d) the lower portion of said rearwardly disposed wall portion and said side members forming, together with said bottom wall member, a generally horizontal rearwardly facing water discharge orifice of substantially lesser cross-sectional area than said inlet opening so that water discharging horizontally rearwardly through said orifice from said chamber moves horizontally forwardly, relative to the road surface, at a velocity less than that of the moving vehicle to thereby reduce spray formed by the discharged water as it engages the road surface,

(e) said attachment also incorporating an upper portion which is disposed above said hollow housing so as to communicate with the interior thereof and which has water-intercepting means arranged to intercept and collect water which in use is thrown against said upper portion by the vehicle wheel so as to direct such water downwardly into the said chamber,

(f) said water intercepting means of said upper portion comprising a plurality of spaced parallel baffles which provide between them a plurality of connected passages forming a generally wave-like sinuous configuration in cross-section.

4,372,571
TRACTOR AND TRAILER COMBINATION
Warren S. Lister, 13 Woodmancourt, Godalming, Surrey, GU7 2BT, England
Filed Jul. 28, 1980, Ser. No. 172,654
Claims priority, application United Kingdom, Aug. 8, 1979, 7927569; Mar. 24, 1980, 8009887
Int. Cl.³ B60D *1/14*; B62D *53/06*
U.S. Cl. 280—423 A **6 Claims**

1. A tractor and trailer combination comprising a drawbar tractor incapable of supporting substantial vertical loads, a semi-trailer having a forward end devoid of ground engaging wheels, and a connector coupling the forward end of said trailer to said tractor, said connector including a frame, an arm, a pivot connecting said arm to said frame and defining a single point of articulation between said tractor and said trailer, a trailer engaging member, means mounting said member on said arm for vertical reciprocation, and means for raising and lowering said member on said arm, means securing the frame to the tractor for towing the connector, and ground engaging wheel means arranged to support vertical loads imposed on said raising and lowering means by the trailer whereby no vertical load is transmitted to said tractor from the trailer.

4,372,572
LIFT BED TANDEM AXLE TRAILER
Richard Verschage, Kewanee, Ill., assignor to The Advance Metalworking Co., Kewanee, Ill.
Filed Mar. 16, 1981, Ser. No. 243,783
Int. Cl.³ B60P *1/02*; B62D *21/02*
U.S. Cl. 280—423 B **11 Claims**

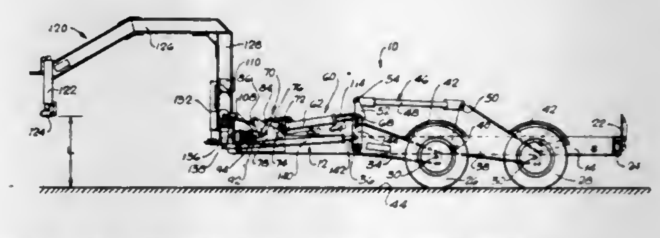

1. A lift bed, tandem axle, trailer, comprising:

a bed having a load supporting floor structure with opposite sides and front and rear ends;
a pair of wheel support arms mounted for pivotal movement about a pair of longitudinally spaced apart transverse axes on each side of said bed for raising and lowering the bed with respect to the ground;
an axle and wheel mounted at the outer end of each support arm for rolling support of said bed;
a tongue extending forwardly of the front end of said bed having an outer end adapted to be hitched to a pulling vehicle for towing said trailer;
load equalizing linkage means between each pair of said wheel support arms on each side of said bed comprising a first link pivotally connected at one end to the rear support arm eccentric of the mounting axis thereof and a second link pivotally interconnected to an opposite end of said first link and pivotally connected to the front support arm eccentric of the mounting axis thereof;
lift means on each side of said bed for pivoting said support arms to raise and lower said bed, said lift means including a longitudinally extensible thrust member having one end pivotally connected to said second link at a point between the pivotal connections of said first link and said front support arm therewith, said thrust member having an opposite end interconnected with said bed; and
shock absorber means for interconnecting the opposite ends of said thrust member and said bed permitting limited travel of said ends in opposite directions longitudinally of said thrust member, said shock absorber means including a bracket fixed to said bed and a pair of resilient cushion members on opposite faces of said bracket, and pressure pad means connected with said thrust member for compressive engagement with said cushion members permitting limited travel of said opposite end of said thrust member in response to pivotal movement of a wheel support arm on said bed during travel.

4,372,573
DROP HITCH SYSTEM
Gerald J. Ihm, Dubuque, Iowa, assignor to Deere & Company, Moline, Ill.
Filed Jun. 6, 1980, Ser. No. 157,120
Int. Cl.³ B60D *7/02*
U.S. Cl. 280—477 **5 Claims**

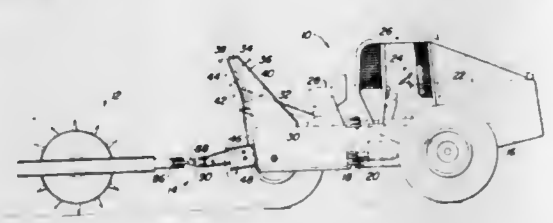

1. In combination with a log skidder including a main frame having a cable winch mounted thereon and wrapped with a length of cable, a drop hitch system, comprising: a drop hitch frame releasably secured to the rear of the skidder and including top, bottom and opposite side walls joined together to define a hollow enclosure opening towards the rear; a horizontal roller extending between and being rotatably supported by the opposite side walls; said top wall having an opening therein forwardly of the horizontal roller for receiving the cable, a pair of upright cable guide means mounted between the top and bottom walls and forming respective rear portions of the opposite side walls; a pulley block having side plates disposed on opposite sides of and rotatably supporting a cable pulley; said plates defining a clevis connection; said cable extending through the opening in the top wall, beneath the roller, about the cable pulley and having a free end anchored to the drop hitch frame at a location spaced equidistant from the upright cable guide means.

4,372,574
SAFETY SKI BINDING
Josef Svoboda, Schwechat, and Franz K. Edinger, Vienna, both of Austria, assignors to TMC Corporation, Baar, Switzerland
Continuation of Ser. No. 34,193, Apr. 27, 1979, abandoned. This application Apr. 6, 1981, Ser. No. 251,038
Claims priority, application Austria, Apr. 27, 1978, 3025/78
Int. Cl.³ A63C *9/08*
U.S. Cl. 280—634 **26 Claims**

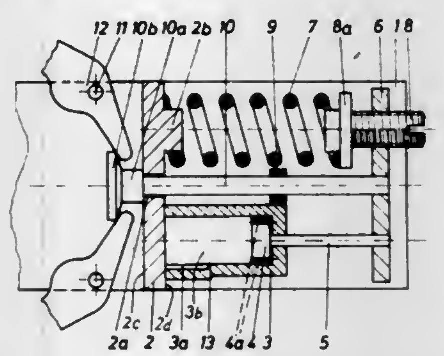

1. A safety ski binding which releases upon reaching a predetermined threshold a ski boot therefrom, comprising:
a base plate adapted to be secured to a ski;
a sole holder movably mounted on said base plate and adapted to engage said ski boot, said sole holder being movable between a ski boot holding position and a ski boot releasing position;
resilient means operatively connected to and biasing said sole holder toward said ski boot holding position and resisting movement of said sole holder toward said ski boot releasing position;
dashpot means independent of said resilient means and operatively connected to said sole holder means and said resilient means for further resisting the movement of said sole holder means from said ski boot holding position toward said ski boot releasing position, said dashpot means including first means defining a chamber and a member movable in said chamber and dividing said chamber into two parts, a fluid in said chamber, connecting means for connecting said sole holder means to one of said chamber defining first means and said movable member so that said movable member is moved relative to said chamber in response to a movement of said sole holder means, restricted passageway means extending through said movable member to provide a restricted fluid connection between said two parts of said chamber and to facilitate a transfer of said fluid from one part of said chamber to the other part thereof; and
second means responsive to the position of said movable member in said chamber for suddenly reducing the resistance to movement of said movable member relative to said chamber and, consequently, the movement of said sole holder means to thereby facilitate the fast release of said ski boot from said ski binding.

4,372,575
VEHICLE STRUT TYPE SUSPENSION WITH ALIGNMENT ADJUSTMENT
Marvin J. Hyma, Pontiac, Mich., assignor to General Motors Corporation, Detroit, Mich.
Filed Feb. 9, 1981, Ser. No. 232,833
Int. Cl.³ B62D *17/00*
U.S. Cl. 280—661 **1 Claim**

1. In a vehicle wheel spring suspension including a strut member on a generally vertical axis of the vehicle and connected adjacent its lower end with wheel spindle means and with a link member swingably mounted on the sprung vehicle superstructure, upper end mounting apparatus for said strut member, comprising, a thin sheet metal superstructure panel including a generally flat mounting tower portion above the

strut proper oriented in a plane substantially orthogonal with said strut axis, an upper strut mounting plate assembly lying against the upper side of said tower portion and including an isolation element on said axis which receives the upper end of said strut, said plate assembly having defined therein a set of slots on parallel axes and widely spaced about said axis, a stud retainer and tower reinforcing member lying against the underside of said tower portion and of a breadth to lie opposed to said set of slots of said plate assembly, said tower portion

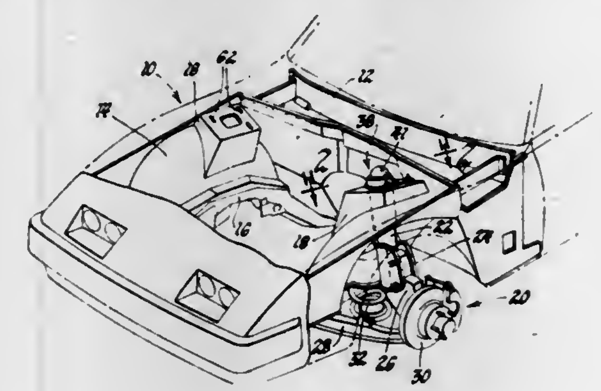

having therein a set of slots juxtaposed to said set of plate assembly slots and arranged on axes perpendicular to the axes thereof, said stud retainer and reinforcing member having affixed thereto a set of threaded studs projecting through the juxtaposed said sets of slots, and nuts threaded over said studs whereby to clamp the tower portion in reinforcing engagement between said plate assembly and said member and whereby either strut camber or strut caster or both may be adjusted by loosening of said nuts for movement of said plate assembly relative to said mounting tower portion.

4,372,576
HOLLOW STABILIZER FOR VEHICLE
Kanji Inoue, Yokohama, Japan, assignor to NHK Spring Co., Ltd., Yokohama, Japan
Filed Dec. 3, 1980, Ser. No. 212,500
Claims priority, application Japan, Dec. 22, 1979, 54-167282
Int. Cl.³ B60G *19/00*
U.S. Cl. 280—689 **5 Claims**

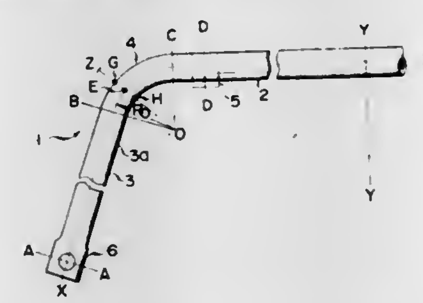

1. A hollow stabilizer for a vehicle, made of a welded metal pipe having a longitudinal welded seam, comprising:
a torsion section to be coupled to a chassis;
a pair of arm sections to be coupled to a wheel suspension; and
a pair of curved sections each connecting the torsion section and the corresponding arm section, the seam of each curved section being so positioned that it extends along the largest curvature portion of all of the curved portions of the curved sections thereof such that the principal stress generated during operation of the stabilizer is small, said position being further determined by the ratio of the wall thickness of the pipe to the outer diameter thereof and by the ratio of the radius of curvature of the curved section to the outer diameter thereof.

4,372,577
TRACTOR
Henning Adickes, Heidelberg, Fed. Rep. of Germany, assignor to Deere & Company, Moline, Ill.
Filed Jun. 30, 1980, Ser. No. 164,800
Claims priority, application United Kingdom, Jul. 27, 1979, 7926193
Int. Cl.³ B62D *1/16, 1/18*
U.S. Cl. 280—780 **2 Claims**

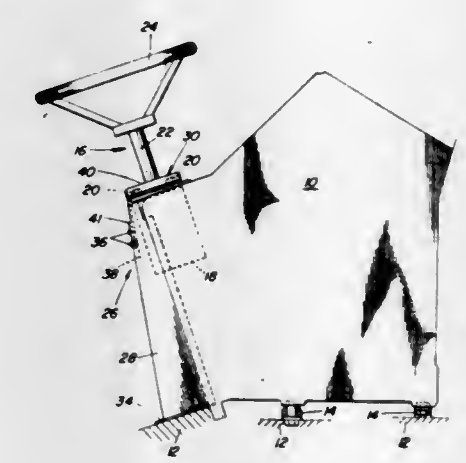

1. A tractor steering assembly comprising:
a support housing;
a steering valve fixed to the support housing;
a generally L-shaped bracket having a first downwardly extending leg and a second leg having a downwardly extending lip circumscribing a downwardly opening trough and having a bracket aperture extending therethrough;
adjustable means for attaching the first leg to the support housing and for permitting alignment of the bracket;
a damping member positioned between the second leg and the support housing and received by the trough, the damping member having a thickness which is greater than the length of the lip of the second bracket leg and having a damping bore with a diameter which is smaller than the diameter of the bracket aperture; and
a steering column coupled to the steering valve and extending through the bore in the damping member and through the bracket aperture, the damping member resiliently resisting relative movement between the bracket and the steering column and yielding to permit engagement between the steering column and a peripheral surface of the bracket aperture upon predetermined compression of the damping member, the damping member damping vibrations of the steering column under low loads, and the peripheral surface of the bracket aperture engaging the steering column to limit deflection of the steering column under high loads.

4,372,578
PASSIVE SAFETY BELT DEVICE
Junichi Takizawa, Isesaki; Seiichiro Kojima, Ohramachi; Nobuo Satoh, and Eiji Nakazato, both of Ohta, all of Japan, assignors to Fuji Jukogyo Kabushiki Kaisha, Tokyo, Japan
Filed Jun. 10, 1980, Ser. No. 158,179
Claims priority, application Japan, Jul. 17, 1979, 54-98657[U]
Int. Cl.³ B60R *21/10*
U.S. Cl. 280—802 **9 Claims**

1. A passive safety belt device for a vehicle having a sash-less door, comprising
a retractor being disposed in a lower portion of a central portion of the vehicle,
a belt supporting member upwardly extending a predetermined height from a rear portion of the sash-less door,
a safety belt being connected between said retractor and said belt supporting member,

a spring steel plate enclosed by said safety belt at an outer end portion of the latter and secured to said belt supporting member at an end thereof,
said belt supporting member being a hollow body comprising a superimposed pair of plates,

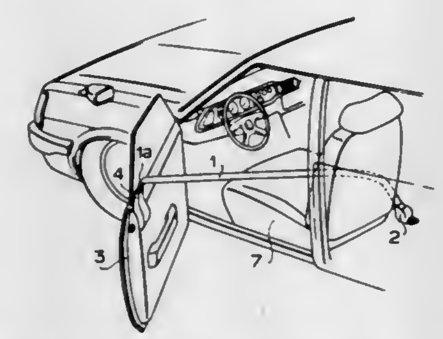

bolts rigidly securing said hollow body to an inside panel of said door at said rear portion, and
said spring steel plate and said superimposed pair of plates being secured to each other.

4,372,579
PASSIVE SEAT BELT ARRANGEMENT FOR A VEHICLE
Hideoki Matsuoka, Yokohama, Japan, assignor to Nissan Motor Co., Ltd., Yokohama, Japan
Filed Nov. 14, 1980, Ser. No. 206,988
Claims priority, application Japan, Nov. 19, 1979, 54-160191[U]
Int. Cl.³ B60R *21/10*
U.S. Cl. 280—802 **5 Claims**

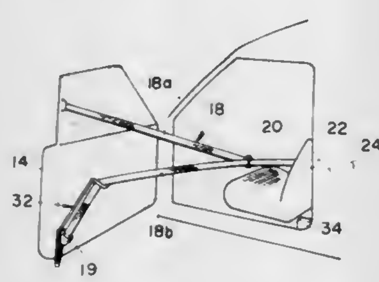

1. A passive seat belt arrangement for a vehicle having a door hinged to the body of said vehicle, comprising:
a first belt having one end fixed to an upper rear portion of said door and the other end fixed to a lower rear portion of said door;
a second belt having at its one end a through ring through which said first belt passes so as to divide the first belt into a shoulder restraining section and a lap restraining section;
a belt retractor mounted in said vehicle to retract said second belt;
a belt supporting member constructed of a resilient wire and connected to an inner side of said door, said belt supporting member including a base portion fixed to said inner side of the door, a fulcrum portion extending from said base portion, a hair-pin portion extending downward and inward from said fulcrum portion to form a hair-pin construction with a curved lower portion, a straight portion extending upwardly from said hair-pin portion while making an obtuse angle relative to said hair-pin portion, and a belt supporting portion extending from said straight portion for supporting thereon a portion of said lap restraining section, the connection of said belt supporting member to said door being such that when no external force is applied to the belt supporting member, the hair-pin portion is raised by a certain angle from the inner side of said door permitting said straight portion to lie on the inner side of said door by making said fulcrum portion act as a fulcrum; and
a blocking member mounted to said vehicle at a portion with which said curved, lower portion of said hair-pin portion is engageable upon closing of the door.

4,372,580
AUTOMATIC SEATBELT SYSTEM
Masanao Motonami, Toyota; Hisashi Ogawa, Okazaki, and Yoshikazu Imai, Toyota, all of Japan, assignors to Toyota Jidosha Kogyo Kabushiki Kaisha, Tokyo, Japan
Filed Dec. 29, 1980, Ser. No. 221,366
Claims priority, application Japan, Feb. 18, 1980, 55-19480[U]
Int. Cl.³ B60R *21/10*
U.S. Cl. 280—802 **9 Claims**

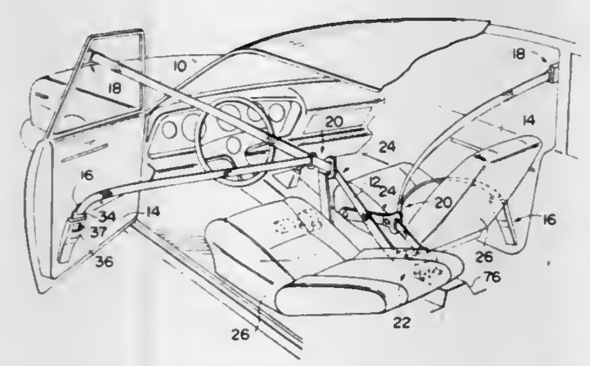

1. An automatic seatbelt system, wherein said seatbelt system has an outer webbing and an inner webbing and said webbings are automatically fastened to an occupant upon his entering a vehicle, comprising:
(a) a first anchor portion secured to the lower portion of a vehicle door, erected upwardly in the vehicle and provided at the forward end thereof with a buckle device;
(b) a tongue plate secured to one end of said outer webbing and engageable with said buckle device;
(c) a second anchor portion for engaging the other end of said outer webbing with the upper portion of the door, said second anchor portion comprising:
a mounting block fixed to a window frame, engaged with a striker having an engageable piece with slot-like cuts penetrated therethrough, said striker being secured to the vehicle body;
an anchor plate solidly secured to said mounting block and engagable with said outer webbing;
anchor bolts, having enlarged first end portions, projecting from said mounting block and inserted through said slot-like cuts, said enlarged first end portions being inserted at the side of said engagable piece opposite to said mounting block so that said enlarged first end portions can be engaged with said engagable piece to impart tensions of the webbings to the vehicle body;
(d) a through-ring for engagement with the forward end of said inner webbing to movably guide the intermediate portion of said outer webbing in the longitudinal direction thereof and to prevent said outer webbing from moving in an emergency of the vehicle;
(e) a retractor provided at substantially the central portion of the vehicle and adapted to wind up the base portion of the inner webbing by a biasing force, and to directly lock the intermediate portion of the inner webbing to prevent the inner webbing from being wound out in an emergency of the vehicle; and
(f) a guide device for moving the intermediate portion of said inner webbing forward in the vehicle to enlarge a space for the occupant to enter or leave the vehicle when the occupant enters or leaves the vehicle.

4,372,581
PRESSURE SENSITIVE COPYING MATERIAL
Hermann Schumacher, Ulmenweg 2, Wülfrath; Tilman Molineus, Langendorfer Str. 7, Dornap-Düssel, and Detlef Ridder, Rellinghauser Str. 153, Essen, all of Fed. Rep. of Germany
Continuation of Ser. No. 31,834, Apr. 20, 1979, abandoned. This application Oct. 20, 1980, Ser. No. 198,432
Claims priority, application Fed. Rep. of Germany, Apr. 21, 1978, 2817557
Int. Cl.³ B41M *5/16, 5/22*
U.S. Cl. 282—27.5 **10 Claims**

1. A pressure sensitive copying element comprising a web having on one side thereof a colour forming coating comprising a layer of a single continuous phase mixture of alkanes having molecular weights from 500 to 3500 with from 0.1 to 10% by weight, based on the weight of said coating, a material selected from the group consisting of cellulose derivatives, hydrocarbon resins, melamine resins, phenolic resins, and styrene resins, and a solution of a colour former in a liquid solvent therefor, said material and said solution each being a separate phase and being dispersed directly in said single phase continuous mixture of alkanes.

4,372,582
STABILIZER FOR ELECTRON DONER-ACCEPTOR CARBONLESS COPYING SYSTEMS
Thomas C. Geisler, Cottage Grove, Minn., assignor to Minnesota Mining and Manufacturing Company, Saint Paul, Minn.
Filed Mar. 30, 1981, Ser. No. 248,843
Int. Cl.³ B41M *5/14, 5/16, 5/22;* **C09D** *11/00*
U.S. Cl. 282—27.5 **15 Claims**

13. A system for forming stable, fade-resistant colored markings from a substantially colorless color-forming composition and a substantially colorless color-developing composition comprising:
(a) a carrier means carrying said color-forming composition, said color-forming composition comprising at least one leuco dye which is fadeable or discolorable after development, carried in an organic solvent vehicle;
(b) a record sheet having on at least a portion of one major surface said color-developing composition comprising an acidic coreactant material capable of reacting with said color-forming composition to provide colored products;
(c) a stabilizing agent carried in a composition selected from the group consisting of said color-forming composition and said color-developing composition, said stabilizing agent being 2,2'-methylene-bis-(4-methyl-6-t-butyl phenol); and
(d) transfer means for transferring at least a portion of said color-forming composition to selected areas of said record sheet having said color-developing composition thereon.

4,372,583
CHROMOGENIC COPY SYSTEM AND METHOD
Anthony E. Vassiliades, 8738 Tanager Woods Dr., Cincinnati, Ohio 45242
Continuation-in-part of Ser. No. 173,255, Jul. 29, 1980, abandoned. This application Aug. 17, 1981, Ser. No. 293,602
Int. Cl.³ B41L *1/20;* **B32B** *5/16, 27/42*
U.S. Cl. 282—27.5 **17 Claims**

1. A pressure-sensitive chromogenic copy system comprising a transfer sheet having on at least a portion of at least one surface thereof a color developer capable of reacting with a chromogen to form a color image, said color developer comprising an oligomeric aromatic carboxylic acid or metallic salt thereof and said oligomer is formed by reacting an aromatic carboxylic acid with an aldehyde at a pH above 7.

10. A coated front and back sheet for a pressure-sensitive chromogenic copy system comprising a substrate having on at least a portion of one surface thereof a coating of chromogen-containing microcapsules and on at least a portion of the other surface thereof a coating of a color developer capable of reacting with said chromogen to form color images, said color developer comprising an oligomeric aromatic carboxylic acid or metallic salt thereof and said oligomer is formed by reacting an aromatic carboxylic acid with an aldehyde at a pH above 7.

4,372,584
COUPLING FOR COUPLING TUBULAR ELEMENTS
Jack E. Miller, Houston, Tex., assignor to Big Inch Marine Systems, Inc., Houston, Tex.
Filed Sep. 26, 1979, Ser. No. 79,218
Int. Cl.³ F16L *35/00*
U.S. Cl. 285—18 **21 Claims**

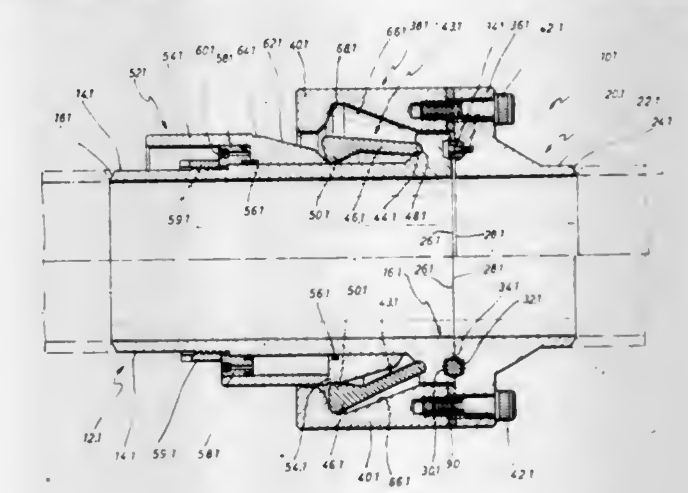

1. A coupling for coupling two tubular elements, the coupling comprising:
first and second tubular members in the form of complementary male and female members for mating with each other, the members having engagement surfaces to be engaged with each other when the members are engaged to limit relative axial movement in one direction,
a locking member axially located by locating means on the first member, the locking member comprising an annular locking sleeve having a plurality of circumferentially spaced displaceable locking fingers which are integral with and comprise a continuous extension of the material of the locking sleeve, and which extend generally axially from the locking sleeve,
displacement means associated with one of the members for displacing the free end portions of the locking fingers transversely to the axis of the locking sleeve, and
a locking recess in the second member for receiving the locking fingers when displaced by the displacement means while the members are in mating engagement, the locking recess defining a bearing surface along which the free ends of the locking fingers will move and against which the free ends of the locking fingers will bear during displacement, the bearing surface being inclined to the axis of the coupling for the locking fingers to be axially compressed between the bearing surface and the locating means and thus to draw the engagement surfaces of the two members into engagement with each other when the free ends of the locking fingers are displaced along the bearing surface.

4,372,585
SLEEVE PROTECTOR FOR VENTING PIPES
Victor Evora, 2209 NW. 5th St., Miami, Fla. 33125
Filed Feb. 2, 1981, Ser. No. 231,216
Int. Cl.³ E04D *13/14*
U.S. Cl. 285—43 **2 Claims**

1. A sleeve protector for venting pipes with circular cross-section and protruding through the roof of a building comprising, in operative combination:
(a) a tubular member including a hollow cylinder attached to a flanged flat portion on one end and said cylinder being provided with a plurality of circumferential ribs on its outer wall, and said tubular member adapted to receive said protuding venting pipes, and

(b) a cap member including a second hollow cylinder and a headed termination attached to one end of said second cylinder having substantialy the shape of a truncated cone

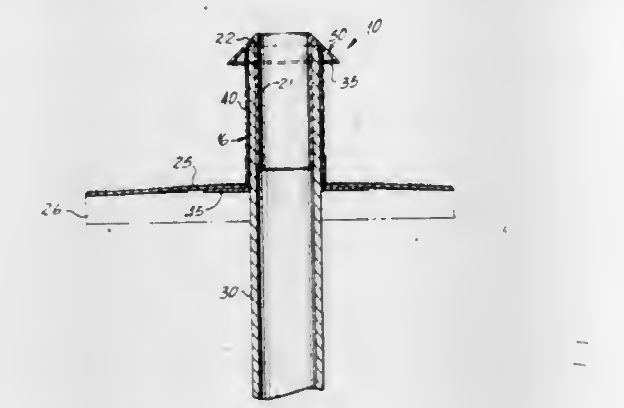

with the larger base of said cone being provided with a plurality of inwardly extending clamps in interlocking cooperation with said ribs so that said cap member can be driven in and locked permanently in position.

4,372,586
ROD CLAMP PARTICULARLY USEFUL AS PIPE COUPLING
Peretz Rosenberg, and Avner Rosenberg, both of Moshav Beit Shearim, Israel
Filed Sep. 25, 1980, Ser. No. 190,653
Int. Cl.^{3} F16L *21/02*
U.S. Cl. 285—178 **15 Claims**

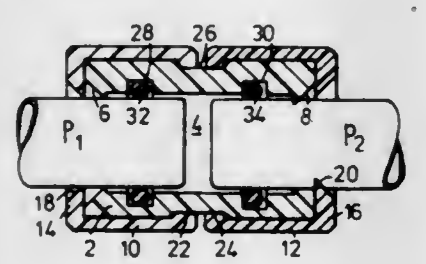

1. A rod clamping device particularly useful as a pipe coupling characterized in that it includes: at least two coaxial members formed with aligned bores adapted to receive therethrough a pipe to be coupled; each of said members being further formed with an annular shoulder projecting inwardly of its respective bore and adapted to grip the pipe when inserted therein; at least one of said annular shoulders being eccentric to the axis of its respective member such that one of said members may be rotated relative to the other either to a release position wherein said annular shoulders are substantially aligned throughout their circumferences thereby permitting the pipe to be freely inserted and removed from their respective bores, or to a clamping position wherein due to the eccentricity of said at least one annular shoulder, the pipe is securely gripped between the shoulders of the two members; said annular shoulders including hard, sharp edges which bite into the pipe when the members are in their clamping positions.

4,372,587
ADAPTER FLANGE
Charles W. Roche, Northboro, Mass., assignor to Uni-Flange Corporation, Northboro, Mass.
Continuation of Ser. No. 97,352, Nov. 26, 1979, abandoned. This application Apr. 14, 1981, Ser. No. 263,710
Int. Cl.^{3} F16L *47/00*
U.S. Cl. 285—238 **2 Claims**

1. Adapter flange for attaching a plastic pipe to a member having a flange, comprising:

(a) two similar main bodies of semi-circular shape, having laterally-extending arms adapted to be fastened together, the bodies defining between them a central bore having a diameter substantially equal to the diameter of the pipe, a conical counterbore at one of said central bore, and a plurality of axial peripheral bores to receive bolts fastening them to the said flange of the member, the surface of the central bore being formed with a plurality of annular serrations, the cross-section of each serration having a triangular shape formed by two sides which are oblique to the surface of the pipe and which intersect to form a shape edge for piercing the surface of the pipe, the two sides being on opposite sides of a plane which is perpendicular to the surface of the pipe and which extends through said sharp edge, each serration having a height relative to the outer diameter of the pipe such that, when the main bodies

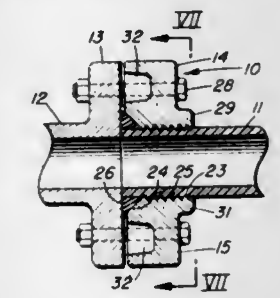

are fastened together, the serrations penetrate the pipe an amount sufficient to prevent slippage of the main bodies on the pipe, but not sufficient to damage or weaken the pipe, each of said main bodies being generally defined by two spaced, parallel faces and a cylindrical surface of semi-circular cross-section, each of said main bodies being provided with pockets that open onto one of the faces and are located between the said peripheral bores,

(b) a resilient seal adapted to extend into said counterbore and to be compressed between the surface of the main bodies and the flange of the member, and

(c) a protuberance on each of said bodies that form an axially-extending hub.

4,372,588
KNOTTER BILLHOOK
Marc G. Vansteelant, Zedelgem, Belgium, assignor to Sperry Corporation, New Holland, Pa.
Filed Jun. 15, 1981, Ser. No. 274,033
Claims priority, application United Kingdom, Jul. 5, 1980, 8022112
Int. Cl.^{3} B65H *69/04*
U.S. Cl. 289—8 **42 Claims**

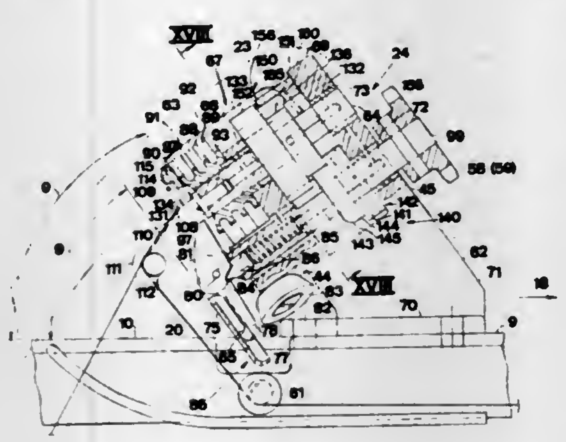

1. A knotter apparatus comprising:

a twine holder operable to hold, during a knot tying operation, a primary and secondary portion of twine in which a knot is to be tied;

a first shaft rotatably supported on a frame, said twine holder mounted on said first shaft;

a plurality of spaced apart twine holder flanges mounted on said first shaft;

a plurality of twine holder fingers pivotally supported by said frame and resiliently urged relative to said flanges;

a second shaft rotatably supported on said frame;

a billhook angularly mounted on said second shaft and operable to tie a knot in said primary and secondary twine portions;

said first and second shafts extending substantially parallel to each other; and

drive means connected for permitting the second shaft to intermittently drive the first shaft during knot tying operations.

4,372,589
KNOTTER APPARATUS
Marc G. Vansteelant, Zedelgem, Belgium, assignor to Sperry Corporation, New Holland, Pa.
Filed Jun. 15, 1981, Ser. No. 273,781
Claims priority, application United Kingdom, Jul. 5, 1980, 8022112
Int. Cl.^{3} B65H *69/04*
U.S. Cl. 289—13 **14 Claims**

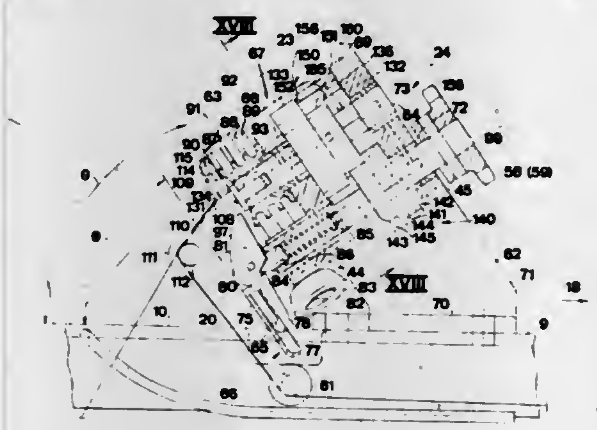

1. A knotter apparatus comprising:

a twine holder operable to hold, during a knot tying operation, a primary and a secondary portion of twine in which a knot is to be tied;

a first shaft rotatably supported on a frame, said twine holder mounted on said first shaft;

a plurality of spaced apart twine holder flanges mounted on said first shaft;

a plurality of twine holder fingers pivotally supported by said frame and resiliently urged relative to said flanges;

a second shaft rotatably supported on said frame;

a billhook mounted on said second shaft and operable to tie a knot in said primary and secondary twine portions; and

said first and second shafts extending substantially parallel to each other.

4,372,590
ELECTRONIC SECURITY DEVICE AND METHOD
Eugene R. Pilat, 2035 Audubon Dr., Glendale Heights, Ill. 60137; George J. Franks, Jr., 261 Whitehall Dr., Palatine, Ill. 60072, and Jerry F. Dyben, 541 Kirkmore Dr., New Haven, Ind. 46779
Continuation-in-part of Ser. No. 28,861, Apr. 10, 1979. This application Mar. 17, 1980, Ser. No. 130,597
Int. Cl.^{3} E05C *1/08*
U.S. Cl. 292—33 **10 Claims**

1. An electromechanical lock unit comprising, in combination, a lock housing unit, a striker unit and a dead bolt unit, each mounted for reciprocation in relation to said housing, said striker being movable between an extended and a retracted position and said bolt being movable between an extended position, a first fully withdrawn position and a secontd, less withdrawn position, dear bolt engagement means on said striker, said dead bolt engagement means being movable between an extended position in which said means forms an operative connection between said striker and said dead bolt, and a withdrawn position allowing movement of said striker to an extended position without corresponding movement of said dead bolt, resilient means normally urging said dead bolt engagement means toward said dead bolt, means associated with said dead bolt engagement means for moving said means to said withdrawn position, means normally urging said striker toward the extended position thereof, means normally urging said dead bolt to the withdrawn position thereof, means for manually positioning said dead bolt in said second position thereof so that said dead bolt engagement means may engage said dead bolt, said striker urging means having sufficient force

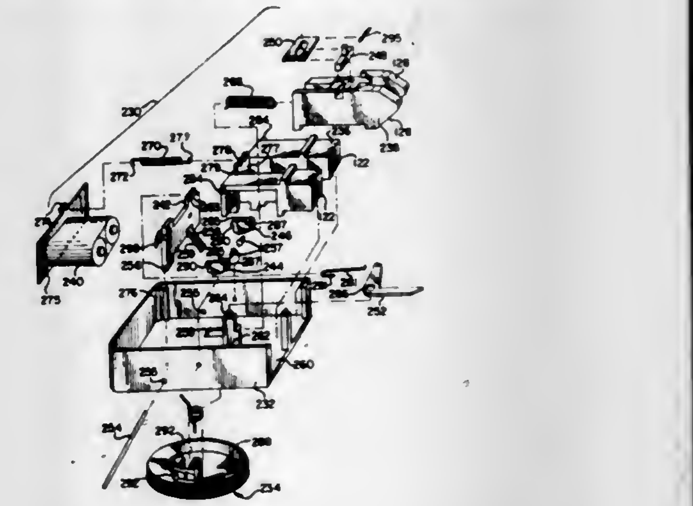

to push said dead bolt and said striker to said extended position thereof, a dead bolt locking latch, and mechanical latch-engaging means movable by a portion of said dead bolt between a first, locking latch-engaging position when said dead bolt is in said extended position thereof, and a second position out of engagement with said locking latch, said locking latch being operatively connected to said means for moving said dead bolt engagement means to said withdrawn position thereof, and means operable in response to an electrical control signal for withdrawing said locking latch from engagement with said latch-engaging means to permit said dead bolt to be withdrawn so as to open said lock.

4,372,591
SAFETY LATCH
Sanford L. Cook, Ocean; Justin J. Molisani, Bricktown, and Kenneth I. Dennison, Jr., West Allenhurst, all of N.J., assignors to Standard-Keil Hardware Mfg. Co., a Division of Buildex Inc., Allenwood, N.J.
Continuation of Ser. No. 973,264, Dec. 26, 1978, Pat. No. 4,203,622. This application Dec. 21, 1979, Ser. No. 106,318
The portion of the term of this patent subsequent to May 20, 1997, has been disclaimed.
Int. Cl.^{3} E05C *3/16*
U.S. Cl. 292—221 **8 Claims**

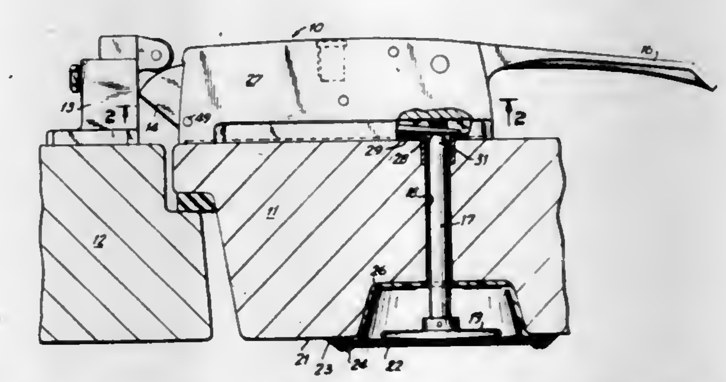

1. Inner safety release mechanisms for use in combination with a refrigerator door latch, said release mechanism comprising:

cup means for seating in a matching recess on the interior face of a refrigerator door, pushrod means traversing said door from the interior to the exterior thereof and having an exterior and an interior end, said exterior end being disposed for releasing said latch when said pushrod means is urged toward the exterior face of said door, said cup means having an aperture therein for passage therethrough of said pushrod means for actuating said latch, said cup means having an open face and a flange therearound for seating against the inner face of said door; and
flexible vapor barrier means covering said open face for prevention of flow of water vapor therethrough.

4,372,592
LOCKING DEVICE
Miki E. Beese, R.R. #3, Goderich, Ontario, Canada (N7A 3X9)
Filed Dec. 24, 1980, Ser. No. 219,982
Int. Cl.³ E05C *19/18*
U.S. Cl. 292—288 **4 Claims**

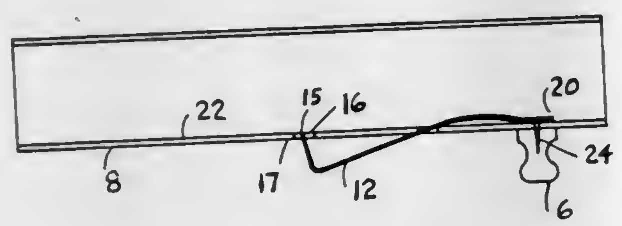

1. A locking device comprising a channel having a U-shaped cross section with a top portion and two side portions, with releasable locking means mounted on one of said side portions, said locking means being made of a strip of suitable metal and having two ends, one end of said strip being bent to form a bolt portion adjacent to an opening on said side portion, the other end of said strip extending within said channel through a second opening in said side portion with an end of the strip opposite to the bolt portion being mounted on an inner surface of said portion containing the openings, the strip being mounted under stress to force the bolt portion towards the opening to which it is adjacent.

4,372,593
TAMPER INDICATOR
David A. Kesselman, 16685 Arnold Dr., Sonoma, Calif. 95476
Filed Jun. 17, 1981, Ser. No. 274,483
Int. Cl.³ B65D *55/02;* F16B *41/00*
U.S. Cl. 292—307 B **24 Claims**

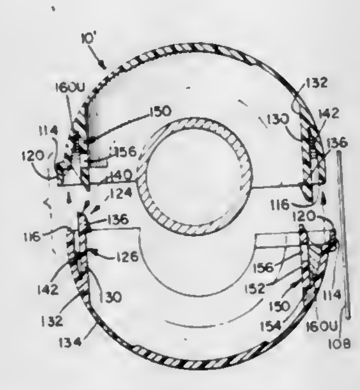

1. A means for indicating tampering with a connection nut comprising:
a circular collar for surrounding and accommodating the connection nut therewithin, said collar being formed of frangible material and including a pair of interlocked collar portions;
each of said collar portions being arcuate in circumferential shape to form a portion of a circle and including a first end having a first end edge and a second end having a second end edge with a first end edge of one collar portion abutting a second end edge of another collar portion to form an essentially continuous, closed periphery about the connection nut, each collar portion further including a first fastening means on said first end and a second fastening means on said second end, said first fastening means including a flexible elongate member affixed at one end thereof to an inner surface of said collar portion and having another end thereof being free and spaced inwardly of said collar portion inner surface, said elongate member having an inner face and an outer face located adjacent to said collar portion inner surface and interposed between said inner face and said collar portion inner surface, said free end being spaced from said collar portion first end to be located outside of said collar portion and having mating means thereon, said mating means including a first ramp angled with respect to said collar inner surface and a ledge forming leg connecting said ramp to said elongate member inner face, said leg being angled with respect to said ramp and to said elongate member inner face and intersecting said inner face at an acute angle with respect to said inner face to form a first catch, said second fastening means includng a flexible elongate member affixed at one end thereof to an inner surface of said collar portion and having another end thereof being free and spaced inwardly of said collar portion inner surface, said elongate member having an inner face and an outer face located adjacent to said collar portion inner surface and interposed between said inner face and said collar portion inner surface, said free end being spaced from said collar portion second end to be located outside of said collar portion and having mating means thereon, said mating means including a ramp defined in said second fastening means elongate member outer surface and angled with respect to said collar inner surface and a ledge forming leg, said leg being angled with respect to said ramp and to said elongate member outer face and intersecting said outer face at an acute angle with respect to said outer face to form a second catch, said first and second catches being mirror images of each other to mate with each other when said collar portions are interlocked, said ramps being angled and located to cause said elongate member to flex when a ramp on said first fastening means of one collar portion is in contact with a ramp on a second fastening means of another collar portion during interlocking of said collar portions, said fastening means being located completely within the periphery of said collar whereby access thereto from outside said collar is prevented;
a cuff surrounding said collar portion second end on at least three sides thereof, said cuff being L-shaped and having a first leg attached to an outer surface of said collar portion adjacent to said collar portion second end edge and extending outwardly from said outer surface, said cuff having a second leg attached to said first leg at a location spaced outwardly from said collar portion outer surface and extending forwardly of the end edge of said collar portion second end so that said cuff is raised from said collar portion outer surface, said inner connecting surfaces between said cuff and said collar portion defining said second end edge and being in the form of a shoulder means on each of said three sides which extend at substantially right angles to the inner and outer surface of said collar portion, and said first end edge of said collar portion defining a rim which also extends at substantially right angles to the inner and outer surfaces of said collar portion, a cuff on one collar portion extending over the first end of a second collar portion to cover said abutted first and second end edges with said shoulder means and said rim being juxtaposed;
at least one reinforcing rib attaching each elongate member to said collar inner surface at a location spaced from said member one end;
weakening means on each collar portion which make the collar susceptible to breaking when removal from a connection nut is attempted; and
the elongate members of said first and second fastening means being positioned on said collar portions to bias said fastening means into locking engagement when said collar portions are interlocked.

4,372,594
BAYONET JOINT BACKSET ADJUSTMENT FOR LATCH CONSTRUCTIONS
Arnold C. Gater, Anaheim, Calif., assignor to Emhart Industries, Inc., Farmington, Conn.
Filed Sep. 19, 1980, Ser. No. 188,758
Int. Cl.³ E05C *1/16*
U.S. Cl. 292—337 **9 Claims**

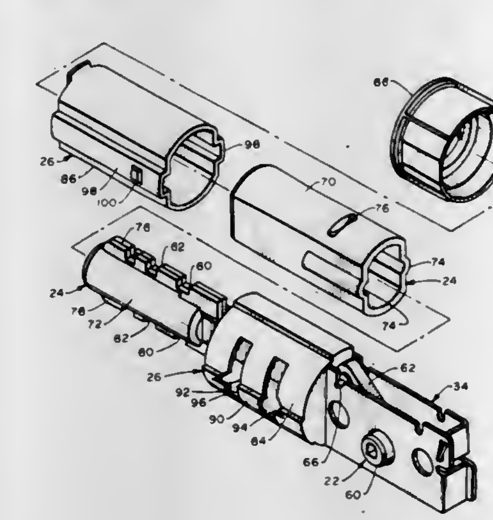

1. In a latch construction for mounting in doors and the like of the type having a bolt longitudinally reciprocal in a door-mounted stationary casing between a forward extended position projecting from a door edge and a rearward retracted position substantially fully within the door edge, latch operating means forwardly operably connected to said bolt and rearwardly operably connected to an operator thereof, said operating means operator being movable about a transverse axis actuating said operating means to reciprocate said bolt, the longitudinal distance between forward extremities of said casing and said operator axis constituting backset; the improvements comprising: casing projection and slot means operably connected to said casing selectively longitudinally adjustable a determined amount for increasing or decreasing said backset said determined amount; bolt projection and slot means operably connected to said bolt selectively longitudinally adjustable a same said determined amount for coordinating with said casing backset increasing or decreasing; each of said casing and bolt projection and slot means including a pair of longitudinally spaced transverse slot portions joined by a longitudinal slot portion.

4,372,595
AUTOMOBILE BUMPER
Gary P. Roberts, 4303 Hanover Ter., Marshall, Tex. 75670
Filed Apr. 10, 1981, Ser. No. 252,939
Int. Cl.³ B60R *19/02*
U.S. Cl. 293—131 **12 Claims**

1. An automobile bumper assembly comprising:
a plurality of support brackets fixedly mountable on an automobile;
a plurality of generally L-shaped support arms, each of said support arms resiliently mounted at a first end thereof in each one of said support brackets;
an elongated bumper member pivotally mounted at a second end of each of said support arms, along a lower edge of said bumper member;
a plurality of impact absorbing members, each of said impact absorbing members mounted in each one of said support brackets and including a resilient portion positioned above said pivotal mounting of said bumper member; and

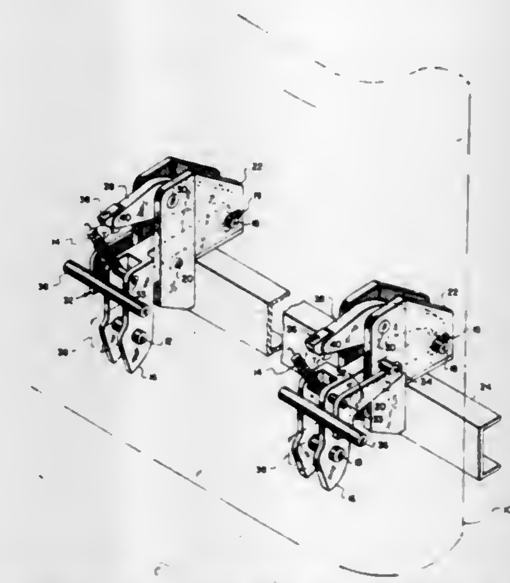

biasing means for pivoting said bumper member into contact with the resilient portion of said impact absorbing means.

4,372,596
FIREPLACE LOG SEPARATOR
Frank Sanders, 204 Springcreek Dr., Pineville, La. 71360
Filed Jan. 6, 1981, Ser. No. 223,021
Int. Cl.³ F23H *17/10*
U.S. Cl. 294—9 **9 Claims**

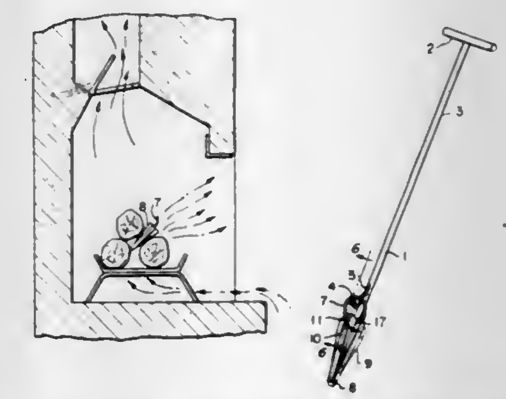

1. A system for separating combustable materials when said materials are positioned in a combusting situs comprising a substantially pyramidally shaped wedge, said wedge having a bore portion, said bore portion having an internally disposed chamber, a keyway communicating said chamber and externally of said bore portion, an elongated carrying means for said wedge, said carrying means having a handle means at one end portion, said carrying means having means at the other end portion adapted and constructed to pass through said keyway into said chamber whereby when said carrying means is rotated said wedge and said carrying means are locked together.

4,372,597
SUBMERSIBLE EQUIPMENT HANDLING SYSTEM
Gordon B. Stillman, Liverpool, and Charles R. White, Manlius, both of N.Y., assignors to General Electric Company, Syracuse, N.Y.
Filed Aug. 24, 1971, Ser. No. 174,406
Int. Cl.³ B66C *1/00*
U.S. Cl. 294—67 DA **7 Claims**

1. For use in deploying and retrieving a submersible object suspended below a surface platform by a main support line depending therefrom, an object handling system comprising, in combination:
(a) a messenger device engaging said main support line and including centering means operable to maintain said mes-

senger device in centered relationship with respect to said line when lowered thereon;

(b) messenger fit means including a plurality of messenger support cables, means carried by said surface platform for paying out and taking in said cables, and means attaching the lower ends of said cables to said messenger device at relatively widely spaced points thereon;

(c) guide means for angularly orienting said submersible object and said messenger device including a guide ramp element and a guide follower element, means mounting one of said guide elements to said object centrally with respect to its point of attachment to said main support line, and means mounting the other of said guide elements to said messenger device centrally with respect to its points of attachment to said support cables, whereby as said object and messenger device are brought into engagement by relative vertical movement said guide ramp and follower elements will rotate the object and messenger device into predetermined angular relationship with respect to each other; and

(d) latch means carried by said object and said messenger device at locations symmetrically disposed with respect to said main support line and spaced therefrom, said latch means being operable upon attainment of said predetermined angular relationship between said object and said messenger device to lock them together for retrieval to said surface platform by lift of said messenger support cables.

4,372,598
CONTOUR BOTTLE CARRIER
Albert G. B. Quelch, 5841 Melshire Dr., Dallas, Tex. 75230
Continuation-in-part of Ser. No. 177,244, Aug. 11, 1980. This application Jan. 19, 1981, Ser. No. 226,452
Int. Cl.^{3} B65D *71/00*
U.S. Cl. 294—87.2 **5 Claims**

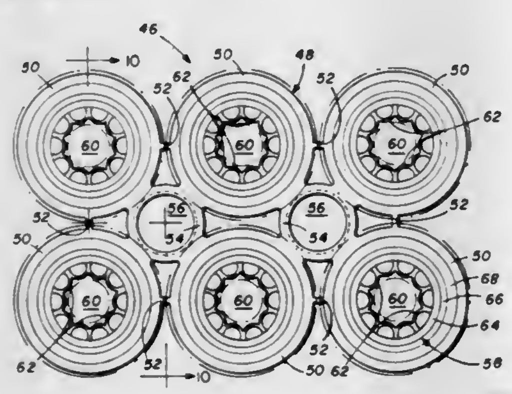

1. Apparatus for carrying a plurality of bottles, which comprises:

a generally flat frame having top and bottom surfaces;

said frame including a plurality of openings therein arranged in at least one spaced apart pair;

a pair of inner and outer cups associated with each opening in said frame, said cups each having upper and lower ends and being interconnected at the lower ends, the upper end of each outer cup being smaller in diameter than the corresponding frame opening and including a recessed annular flange peripherally connecting the upper end of said outer cup and the bottom surface of said frame, said flange being adapted to receive the heel of a bottle stacked upon said apparatus; and

the upper end of each inner cup comprising a predetermined bottle receiving opening defined by hollow sections circularly arranged and adapted to receive and retain a bottle by its neck.

4,372,599
CROWN SUPPORT BEVERAGE CARRIER
Randall A. Kiedaisch, Deforest, Wis., and Leonard M. Cooper, Bradley, Ill., assignors to Manville Service Corporation, Denver, Colo.
Filed Mar. 2, 1981, Ser. No. 239,816
Int. Cl.^{3} B65D *71/00*
U.S. Cl. 294—87.2 **2 Claims**

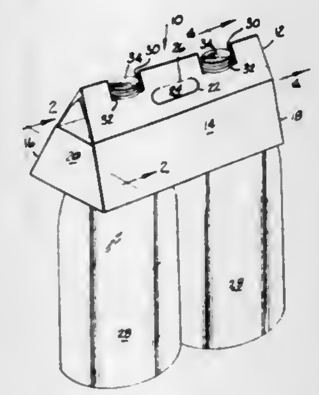

1. A production blank for a crown support beverage carrier comprising:

(a) a first inner side wall panel;

(b) a first outer side wall panel hingedly attached to the first inner side wall panel;

(c) a first upper outer panel section hingedly attached to the first outer side wall panel and having formed therein a handle opening;

(d) a second upper outer panel section hingedly attached to the first upper outer panel section and having formed therein a handle opening, the first upper outer panel section and the second upper outer panel section having formed therein and lying therebetween at least two bottle neck receiving openings;

(e) a second outer side wall panel hingedly attached to the second upper outer panel section and having formed thereon, on each side thereof an end wall panel, each end wall panel having formed thereon a glue flap;

(f) a second inner side wall panel hingedly attached to the second outer side wall panel;

(g) a first upper inner panel section hingedly attached to the second inner side wall panel and having formed thereon a handle opening;

(h) a first elongated inner panel section hingedly attached to the first upper inner panel section;

(i) a second elongated inner panel section hingedly attached to the first elongated inner panel section, the first and second inner panel sections having formed thereon and positioned therebetween at least two bottle neck receiving openings; and

(j) a second upper inner panel section hingedly attached to the second elongated inner panel section and having formed thereon a handle opening.

4,372,600
BOTTLE CARRIER
Russel W. Leib, Jr., Atlanta, Ga., assignor to The Mead Corporation, Dayton, Ohio
Continuation of Ser. No. 137,909, Apr. 7, 1980, abandoned. This application Aug. 10, 1981, Ser. No. 291,383
Int. Cl.^{3} B65D *71/00*
U.S. Cl. 294—87.2 **8 Claims**

1. A bottle carrier comprising a bottom wall having a plurality of neck receiving apertures, a pair of side walls joined respectively along their bottom edges to the side edges of said bottom wall, each of said side walls being formed of inner and outer panels secured together in face contacting relation, a plurality of top receiving apertures formed in the upper portions of said side walls and disposed respectively in aligned relationship with said neck receiving apertures, a side wall

extension panel foldably joined to one of said outer panels and extending generally downwardly therefrom and disposed in an

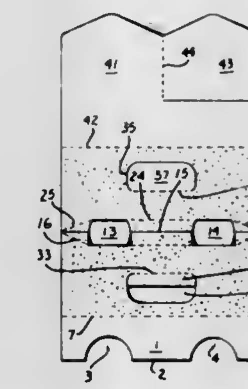

overlying relationship with the shoulder portion of at least one bottle, and a cushioning panel joined to said side wall extension panel and extending generally laterally inwardly therefrom.

4,372,601
AIR DRAG REDUCING TAIL GATE
Michael C. Smith, 211 Bonaventure Dr., LaGrange, Ga. 30240
Filed May 28, 1981, Ser. No. 268,101
Int. Cl.^{3} B60J *5/12*
U.S. Cl. 296—50 **8 Claims**

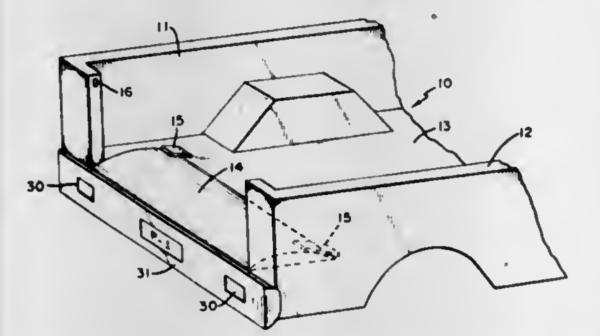

1. In a vehicle of the type having a cargo compartment formed by at least two side walls and a bed, the improvement comprising an air drag reducing tail gate adapted to rotate about an axis parallel to and substantially coincident with its lower edge to move into the cargo compartment of the vehicle and become aligned in air drag reducing position adjacent to said bed to minimize air drag and increase fuel efficiency while retaining maximum utility and safety.

4,372,602
SMALL-SIZED VEHICLE
Toshio Tsuchiya, Kawagoe; Akito Enokimoto, Asaka; Sadao Mizushima, Tokyo, and Suwaji Takano, Urawa, all of Japan, assignors to Honda Giken Kogyo Kabushiki Kaisha, Tokyo, Japan
Filed Oct. 28, 1980, Ser. No. 201,530
Claims priority, application Japan, Oct. 31, 1979, 54-14069
Int. Cl.^{3} B62J *17/00*
U.S. Cl. 296—78 R **12 Claims**

12. A small-sized vehicle, comprising:

a vehicle body having a pair of front wheels;

a handlebar for steering said front wheels, said handlebar being disposed substantially centrally in the width direction of a front portion of said vehicle body;

a driver's seat disposed substantially centrally in the longitudinal direction of said vehicle body;

a footrest floor extending between said handlebar and said seat;

a windshield unit mounted on and extending upwardly and rearwardly from a front end of said vehicle body so as to be disposed in overhanging relation to said handlebar and said driver's seat;

said windshield unit including a container therein;

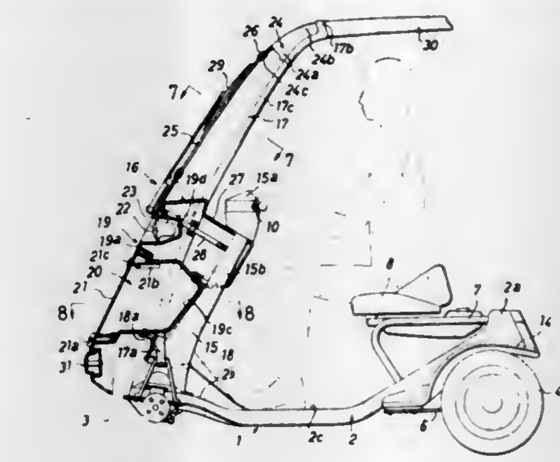

said windshield unit including a lower cover; and

said container being provided with a hinged lid comprising a part of said lower cover.

4,372,603
DOUBLE PIVOT DOOR FOR CARGO VEHICLES
Edmund A. Stanczak, and Stephen J. Ringe, both of Detroit, Mich., assignors to Fruehauf Corporation, Detroit, Mich.
Continuation of Ser. No. 970,315, Dec. 18, 1978, abandoned. This application Oct. 21, 1980, Ser. No. 198,991
Int. Cl.^{3} B60J *1/00*
U.S. Cl. 296—146 **19 Claims**

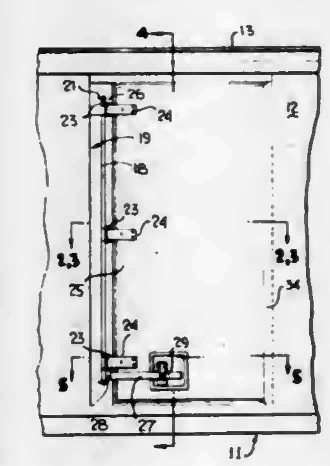

15. In a van body having a side wall of predetermined thickness, said side wall having an outer surface and having a door opening therein, the combination of a door sized to fill the door opening and being of a thickness commensurate with that of said side wall, sealing means interposed between the periphery of said door and the margin of said side wall defining said door opening, and hinge/keeper means mounted substantially flush with respect to said side wall and said door for controlling initial opening and terminal closing motions of said door to preserve the integrity of said sealing means while permitting the door to swing substantially 180° between its fully open and fully closed positions, said door and said hinge/keeper means being mounted in recessed relationship with respect to said outer surface of said side wall when the door is in its closed position.

4,372,604
STOWABLE ARMREST TABLE ASSEMBLY
William Raksanyi, Hammond, and Ronald W. Marsh, Michigan City, both of Ind., assignors to Pullman Incorporated, Chicago, Ill.
Filed Oct. 6, 1980, Ser. No. 194,193
Int. Cl.[3] A47B *83/02*
U.S. Cl. 297—162 **5 Claims**

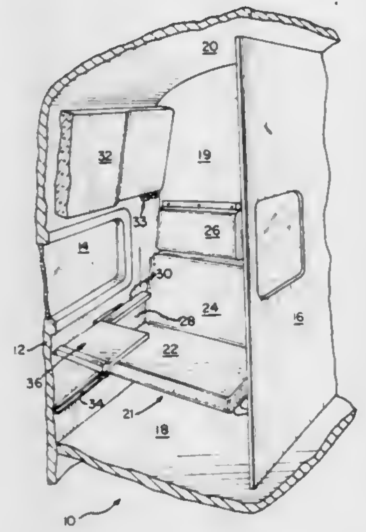

1. A stowable armrest table assembly movable from a stowed, non-use position to an upright, use position for a seating unit having an armrest, said assembly comprising
a support sleeve having an internal contour secured to a side of the armrest;
a support bar extending through the sleeve;
a platform assembly having a table portion spaced from said support bar to define a space having a width greater than the thickness of said support sleeve and a ledge portion at the upper end of said table portion secured to said support bar at one end thereof;
blocking means on the other end of the bar to prevent movement of said other end through the sleeve;
a retaining member fixed to the bar intermediate of the ends, said retaining member having a shape corresponding to the interior profile of the sleeve and
said retaining member not being within said support sleeve and said blocking means not being in contact with said sleeve when said platform assembly is in said non-use position and said retaining member being within said support sleeve and said blocking means being in operational contact with said sleeve when said platform assembly is in said use position.

4,372,605
HAIRDRESSER CHAIR
Victoria Cervantes, 5538 Capellina Way, Santa Barbara, Calif. 93111
Filed Oct. 3, 1980, Ser. No. 193,655
Int. Cl.[3] A47C *7/62, 1/04*
U.S. Cl. 297—192 **2 Claims**

1. A hairdresser chair comprising:
a stanchion assembly;
a base, said stanchion assembly being mounted on said base;
a seat mounted on said stanchion assembly, said seat having a substantially planar seating surface and bottom surface;
a back connected by connecting means to said seat, said back having a substantially planar front surface, said front surface being substantially perpendicular to said seating surface;
a pair of spaced-apart arms being attached to said back, each of said arms being individually pivotally connected to said back, each said arm being movable between an extended position and a retracted position, said retracted position being when a said arm is totally located against said back, said extended position is when a said arm extends outwardly from said front surface;
a tray assembly being pivotally mounted on said stanchion assembly, said tray assembly being located directly adjacent said bottom surface,
said tray being pivotally attached to said arm assembly for movement between a usable position and a storage position,

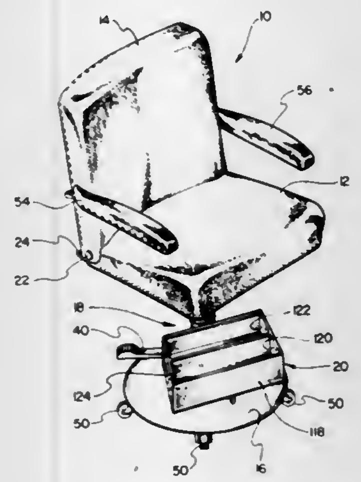

said storage position not permitting access to any contents contained within said tray; and
said tray includes at least one article supporting drawer, said drawer being pivotally mounted within said tray, movement of said tray to said storage position causes said drawer to pivot in respect to said tray thereby not permitting access into said drawer.

4,372,606
ROCKER STRUCTURE FOR ROCKING CHAIRS
James K. Faull, Rte. #1, Box 156, Enon Valley, Pa. 16120
Filed Sep. 29, 1980, Ser. No. 191,866
Int. Cl.[3] A47C *3/02*
U.S. Cl. 297—265 **7 Claims**

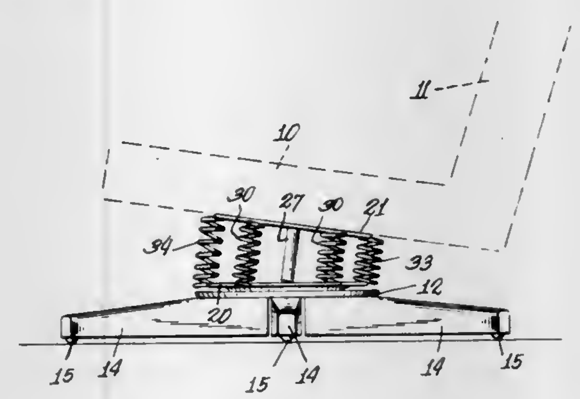

1. A rocking structure for a chair, comprising:
a pair of generally horizontally-disposed rigid plates, one spaced vertically above and in line with the other, the upper plate being adapted for connection to the seat of the chair, said plates having corresponding opposite side margins, and corresponding front and rear margins which, when said upper plate is connected to the chair seat, face the front and rear of the chair,
means connected to the lower plate and including legs for supporting the chair from a floor surface,
a pair of rigid posts extending transversely between said plates, each post disposed inwardly of a respective one of the opposite side margins of said plates, and each post having its upper and lower ends engaging respective facing surfaces of said upper and lower plates at a localized place intermediate the length of a respective side margin in a manner to provide rocking movement of said upper plate relative to said lower plate and in turn provide for rocking movement of the chair seat in a direction from the front to the rear and vice versa, and
a pair of coil springs disposed on opposite sides of each post in line with the rocking movement of said upper plate, said springs drawing said plates toward each other and yieldably opposing rocking movement of said chair seat.

4,372,607
FORWARDLY INCLINING SEAT
Yoichi Mizushima, Yokohama, and Taketoshi Hosonaga, Tokyo, both of Japan, assignors to Nissan Motor Co., Ltd., Yokohama, Japan
Filed Oct. 2, 1980, Ser. No. 193,258
Claims priority, application Japan, Oct. 3, 1979, 54-127794
Int. Cl.[3] B60N *1/02*
U.S. Cl. 297—325 **2 Claims**

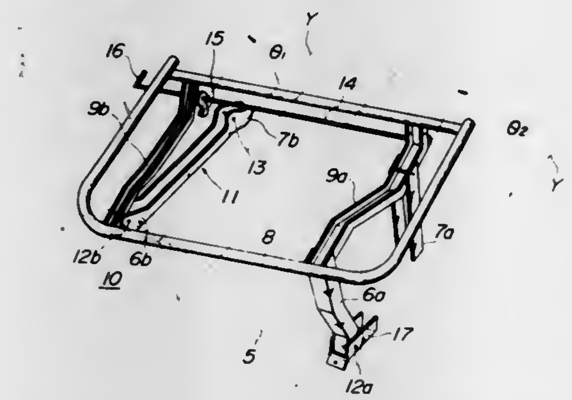

1. In combination: a vehicle having a vehicle floor with a first portion at one side of the vehicle at a first level, and a second portion spaced laterally from said first portion towards the center of the vehicle and at a second level higher than said first level, a seat having a support frame for supporting a seat cushion normally horizontally in said vehicle, first and second leg support frames fixed to said support frame at laterally spaced apart positions above said first and second portions respectively, first and second front and rear support legs respectively fixed to said first and second leg support frames, and means for respectively rotatably supporting said front support legs about a common axis inclined obliquely with respect to said first level, said rear support legs being movable away from said floor, whereby said seat is adapted to be rotated about said axis and said seat inclined forwardly and lifted upwardly towards said center about said axis.

4,372,608
TREATMENT CHAIR
Mitsuhiko Hotta, Kyoto, Japan, assignor to Kabushiki Kaisha Morita Seisakusho, Kyoto, Japan
Filed Dec. 4, 1980, Ser. No. 213,006
Claims priority, application Japan, Dec. 6, 1979, 54-169583[U]
Int. Cl.[3] A47C *1/024*
U.S. Cl. 297—361 **4 Claims**

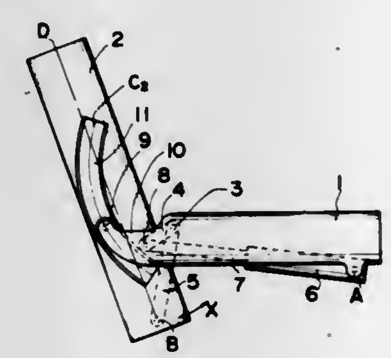

1. An improved chair of the type comprising (a) a seat frame, (b) a roller supported at the end of said seat frame, (c) a backrest frame, (d) a guide fixed in location with respect to said backrest frame adapted to rotatably fit said roller therein and (e) a driving mechanism connected to said seat frame and to said backrest frame for causing a point on the lower end of said backrest frame to arcuately travel along a path lying below the position in which said frame rotates in contact with said roller;
wherein the improvement comprises said guide groove comprising an arcuate portion having a center curvature on the front side of said backrest frame facing said seat frame and located so as to result in the peripheral speed of the upper portion of said backrest frame being maintained at a constant value during the raising and lowering of said backrest frame.

4,372,609
VEHICLE SEATS COMPRISING A SHELL-SHAPED FRAME
Bernard Boisset, Etampes, France, assignor to Societe Industrielle Bertrand Faure, Etampes, France
Filed Nov. 6, 1980, Ser. No. 204,697
Claims priority, application France, Nov. 14, 1979, 79 28118
Int. Cl.[3] A47C *1/025*
U.S. Cl. 297—362 **8 Claims**

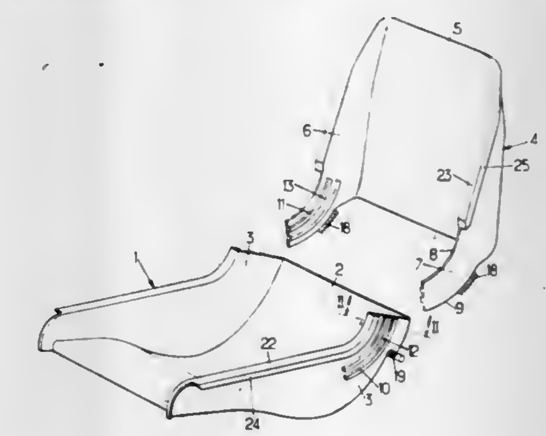

1. A vehicle seat, comprising:
a sitting portion shell for a sitting portion cushion, this sitting portion shell having a rear and two laterally opposite vertical flanges; and
a seat back including a frame having a base, this base comprising two laterally opposite downwardly, forwardly curving lugs;
means defining a set of first circularly arcuate rib and groove means on each of said vertical flanges of said sitting portion shell and means defining a complimentary set of second circularly arcuate rib and groove means on each of said lugs of said seat back frame base;
each said set of first rib and groove means being arcuately, slidingly interdigitated with a respective said set of second rib and groove means being arcuate about a transverse horizontal axis situated in the expected vicinity of the pivoting axis of the hips of the seat occupant and concave forwards and upwards, so that downward movement of the seat back is accompanied by rearward tilting of the seat back relative to the sitting portion shell; and
adjustment means associated between said sitting portion shell and said seat back frame operable when manipulated by a given amount to slide the first and second sets of rib and groove means arcuately relative to one another by a corresponding amount, for erecting and reclining the seat back relative to the sitting portion shell.

4,372,610
SILENT SEAT BACK RECLINER MECHANISM
Alfred J. Fisher, III, Grosse Pointe Farms, and Robert L. Bell, Oxford, both of Mich., assignors to Fisher Corporation, Troy, Mich.
Filed Sep. 25, 1980, Ser. No. 190,583
Int. Cl.³ A47C *1/025*
U.S. Cl. 297—367 **4 Claims**

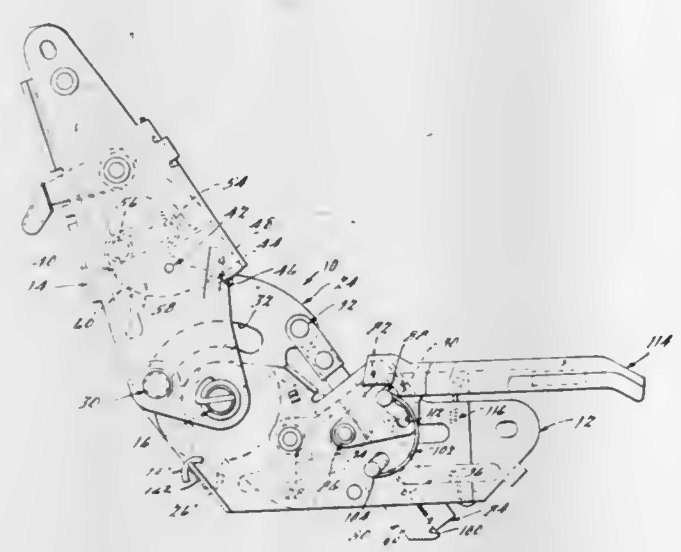

1. A latch mechanism for controlling rotation of a vehicle seat back to a reclining position relative to a vehicle seat, said mechanism comprising
a seat bracket attachable to said vehicle seat,
a seat back bracket,
a seat back bracket pivot pin joining said seat bracket and seat back brackets for relative rotation,
a quadrant supported by said seat back bracket pivot pin for rotation relative to both seat bracket and seat back bracket,
stop means for said quadrant for limiting rotation of said seat back bracket relative to said quadrant,
an arm pivot pin on said quadrant radially spaced from said seat back bracket pivot pin,
an arm rotatably secured on said arm pivot pin and extending between the arm pivot pin on said quadrant and said seat bracket for controlling the rotative position of said quadrant relative to said seat bracket, said arm having teeth on one side thereof,
a pawl support pin on said seat bracket,
a pawl rotatably secured on said pawl support pin having a toothed portion engageable with the teeth on said arm,
an arm clamp engageable with said arm on the opposite side thereof from the teeth thereon, and,
a manual operator movable between a locked and an unlocked condition, movement of said manual operator from the locked to the unlocked condition effecting movement of said arm clamp relative to both said pawl and said arm whereby said arm is unlocked for movement relative to said pawl, movement of said arm clamp conditioning said arm and pawl for rotation about said arm pivot pin and said pawl support pin respectively thereby to change the angular relationship between said arm and pawl to disengage the teeth thereon whereby said seat back bracket is positionable at a desired rotational position relative to said seat bracket.

4,372,611
SEAT WITH ADJUSTABLE BACK
Lester H. Feddeler, Elk Grove Village, Ill., assignor to Coach and Car Equipment Corporation, Elk Grove Village, Ill.
Filed Nov. 28, 1980, Ser. No. 211,373
Int. Cl.³ A47C *1/025*
U.S. Cl. 297—371 **4 Claims**

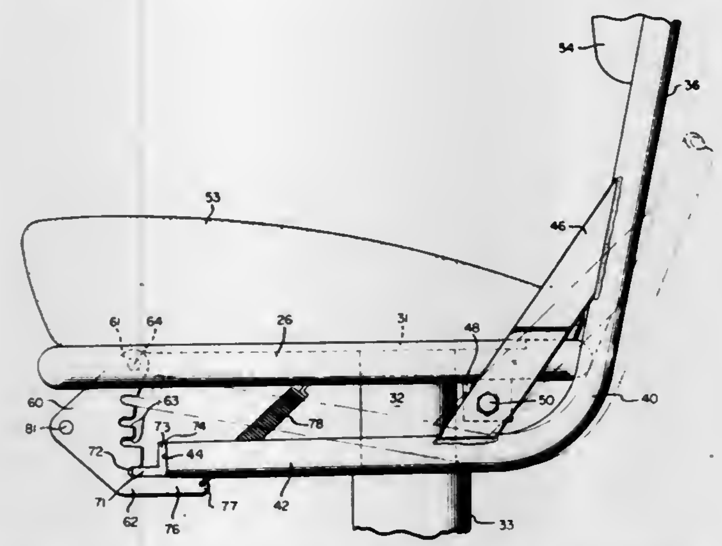

1. A seat with an adjustable back frame, said seat comprising:
a substantially horizontally disposed seat frame having front and rear ends;
a substantially vertically disposed back frame having top and bottom ends;
means pivotally connecting said back frame, adjacent its bottom end, to said seat frame adjacent the rear end of the latter, and mounting said back frame for movement about a first horizontal pivotal axis extending from side to side on said seat;
a pair of spaced-apart members, each extending from said back frame, adjacent the bottom end thereof, forwardly therefrom and each terminating at a respective forward end located in front of said first horizontal pivotal axis;
a pair of spaced-apart latch plates each having upper and lower ends and a plurality of notches therebetween;
means pivotally connecting each latch plate, adjacent its upper end, to said seat frame forwardly of said first horizontal pivotal axis, and mounting said latch plate for movement about a second horizontal pivotal axis extending from side to side on said seat;
a bar extending between the forward ends of said spaced-apart members, said bar comprising means for individually engaging the notches on each of said latch plates to lock said back frame against pivotal movement about said first horizontal pivotal axis;
means normally urging both of said latch plates in a pivotal direction toward said bar to releasably engage an individual notch on each plate with said notch-engaging means on sad bar;
a lower part on said bar;
a rearwardly extending projection at the bottom end of each latch plate;
means on the lower part of said bar for abutting against said rearwardly extending plate projections to limit pivotal movement of said back frame in one pivotal sense;
said pivotal connecting means for the latch plates comprising means mounting each latch plate for movement between an engaging position with said bar and an unengaged position of maximum displacement from said engaging position and at which said latch plate abuts against said seat frame at a location to the front of said second horizontal pivotal axis;
said rearwardly extending projections comprising means abuttable with said lower part of said bar when said latch plate is in said position of maximum displacement.

4,372,612
INFINITELY VARIABLE SEAT RECLINER MECHANISM
John W. Wiers, Romeo; Daniel W. Roper, Rochester, and Richard F. Johnson, Bloomfield Hills, all of Mich., assignors to Rockwell International Corporation, Pittsburgh, Pa.
Filed Jul. 30, 1980, Ser. No. 173,778
Int. Cl.³ A47C *1/027*
U.S. Cl. 297—374 **4 Claims**

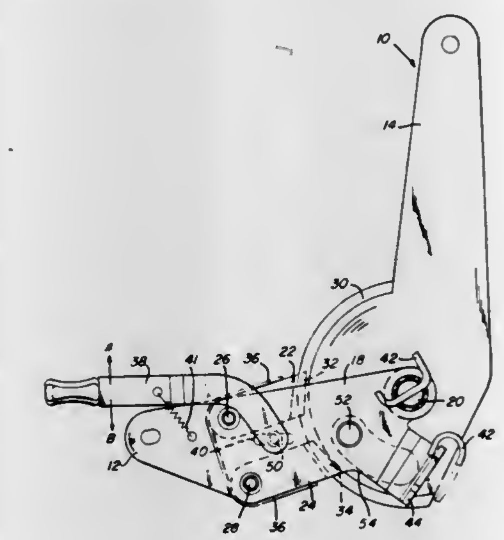

1. An adjustable positioning device comprising:
a first member and a second member being pivotally connected to permit relative rotation of said members about an axis of rotation;
second member having a circular friction surface thereon with its center at said axis of rotation;
a pair of locking pawls pivotally mounted on said first member and being capable of rotation about spaced centers and into at least point contact at one end of each said pawl with said circular friction surface of said second member;
means for biasing said locking pawls in opposite circumferential directions relative to said circular friction surface to urge said one end of each of said pawls into said point contact with said circular friction surface;
each of said locking pawls having a grooved surface on said one end thereof, said friction surface of said second member having a cross section capable of mating with said grooved surface in said locking pawls, said biasing means tending to force said grooved surface of said one end of said locking pawls into wedging engagement with said friction surface of said second member whereby relative rotation between said first member and said second member in a first direction is prevented by the greater wedging engagement between one of said locking pawls and said friction surface and relative rotation in the other direction is prevented by the greater wedging engagement between the other of said locking pawls and said friction surface; and
means for pivotally moving said locking pawls against said means for biasing and out of engagement with said friction surface of said second member to allow relative movement between said first member and said second member.

4,372,613
CASING FOR SEAT-BELT RETRACTOR
Toshiyuki Kitakami, and Yoshinori Akiyama, both of Yokohama, Japan, assignors to Nissan Motor Co., Ltd., Yokohama, Japan
Filed Nov. 21, 1980, Ser. No. 209,175
Claims priority, application Japan, Nov. 28, 1979, 54-165415[U]
Int. Cl.³ A47C *31/00;* **A62B** *35/00*
U.S. Cl. 297—481 **4 Claims**

1. A casing for a seat-belt retractor comprising:
(a) a housing for retracting a seat belt therein when the tension of the seat belt is released, said housing having an opening for passing the seat belt therethrough and a dumbbell shaped slot provided on each of two opposite side thereof;
(b) a flexible rectangular webbing guide sleeve through which the seat belt is passed, said sleeve being fitted within the opening of said housing; and
(c) a pair of pins implanted in said sleeve for connecting said sleeve to said housing, said pins extending through the slots

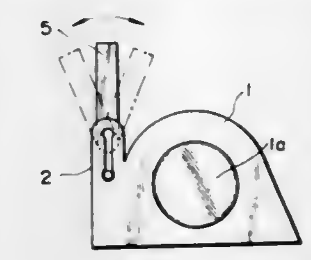

in a manner to permit said sleeve to telescopically extend from a first position essentially within said housing to a second position extending therefrom, said pins being snap-fitted to the wider end portions of respective slots for selectively retaining said sleeve in either of its two positions,
whereby when said sleeve is in its second position, said sleeve is permitted to bend from the axis of movement within said housing.

4,372,614
ROTATING WEDGE FOR BLOCKING UP THE DUMPING PLATFORM OF A TRUCK IN DUMPING POSITION
Jacques Fortier, Huberdeau, Comte d'Argenteuil, Quebec, Canada (J0T 1G0)
Filed May 12, 1981, Ser. No. 263,187
Int. Cl.³ B60P *1/04*
U.S. Cl. 298—17 B **8 Claims**

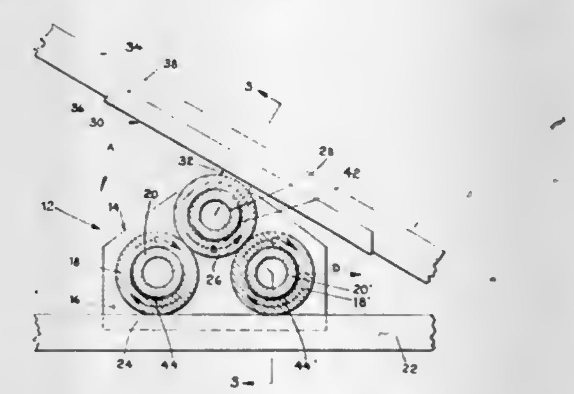

1. A pivoted wedge for blocking up the dumping platform of a dumping truck in dumping position, comprising a main body, a pair of driven rotating means rotatably mounted in the main body for riding on the frame of the truck and allowing translation of the body along said frame, and driving means rotatably mounted in the main body for riding on the frame of the dumping platform, said driving means positively engaging both driven means and rotating them toward the junction between the frame of the truck and the frame of the platform when the dumping platform is moving down, thus causing movement to the wedge toward the junction and self blocking of the platform in dumping position.

4,372,615
METHOD OF RUBBLING OIL SHALE
Thomas E. Ricketts, Grand Junction, Colo., assignor to Occidental Oil Shale, Inc., Grand Junction, Colo.
Continuation of Ser. No. 75,846, Sep. 14, 1979, abandoned. This application Sep. 29, 1980, Ser. No. 192,330
Int. Cl.³ E21C *41/10;* **E21B** *43/263*
U.S. Cl. 299—2 **39 Claims**

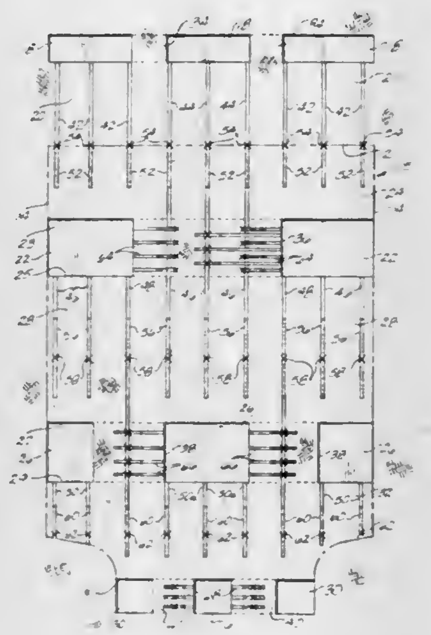

1. A method of recovering shale oil from a subterranean formation containing oil shale which comprises the steps of:
excavating formation to form at least one void in the subterranean formation leaving zones of unfragmented formation above and below such a void, such a zone of unfragmented formation having a center and a substantially horizontal free face adjoining the void;
placing explosive into at least one of the zones of unfragmented formation;
forming a fragmented permeable mass of formation particles containing oil shale in an in situ oil shale retort in the subterranean formation by detonating such explosive for explosively expanding the unfragmented formation in such a zone of unfragmented formation in a single round for moving formation located at about the center of such zone of unfragmented formation a greater distance in a given time interval after beginning of the single round than formation located in such zone of unfragmented formation outward from about the center of such zone of unfragmented formation;
introducing gas into the fragmented permeable mass in the in situ oil shale retort for establishing a retorting zone in the fragmented permeable mass wherein oil shale is retorted to produce gaseous and liquid products, and for advancing the retorting zone through the fragmented permeable mass; and
withdrawing the gaseous and liquid products from the in situ oil shale retort.

4,372,616
METHOD FOR RESTORING FORMATION PREVIOUSLY LEACHED WITH AN AMMONIUM LEACH SOLUTION
James M. Paul, and Wilton F. Espenscheid, both of DeSoto, Tex., assignors to Mobil Oil Corporation, New York, N.Y.
Filed Dec. 31, 1980, Ser. No. 221,728
Int. Cl.³ E21B *43/28*
U.S. Cl. 299—5 **3 Claims**
1. A method for restoring to environmentally acceptable levels the ammonium ion content in a subterranean formation that has been subjected to in situ oxidative leaching with an ammonium leach solution which comprises passing through said formation a restoration fluid containing carbonic acid.

4,372,617
ICE EDGER FOR ICE RESURFACING MACHINE
Frank J. Zamboni, Paramount, Calif., assignor to Frank J. Zamboni & Co., Paramount, Calif.
Filed Jan. 5, 1981, Ser. No. 222,482
Int. Cl.³ E01H *5/12*
U.S. Cl. 299—24 **10 Claims**

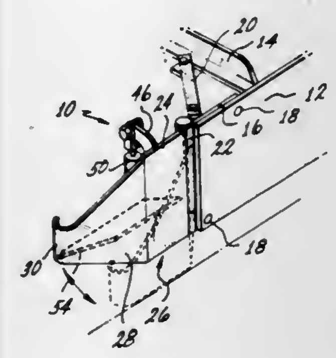

1. An edging apparatus for use on an ice surface modifying machine of the type which includes an ice modifying component capable of shaving an ice surface which comprises:
a guide means, at least a portion of said guide means capable of being located adjacent to and following the contours of a projecting surface which is located next to and extends above an ice surface;
an ice shaving means including an ice shaving edge, said ice shaving means operatively associated with said guide means with at least said ice shaving edge formed as a structure independently of said guide means, at least said shaving edge movable in a vertical direction with respect to said ice surface between a shaving position wherein said shaving edge is capable of contacting and shaving said ice surface and a non-shaving position wherein said shaving edge is lifted vertically to a position above said ice surface, at least in said shaving position one of the ends of said shaving edge being located in close association with said portion of said guide means capable of being located adjacent to said projecting surface;
pivoting means operatively connecting said guide means and said ice shaving means to one of the side edges of said machine so as to allow said guide means and said ice shaving means to pivot between an extended position wherein at least said portion of said guide means capable of being adjacent to said projecting surface is extended outwardly from the plane of the side edge of said machine and a retracted position wherein both of said guide means and said ice shaving means do not essentially extend beyond the plane of said side edge;
positioning means reversibly retaining said guide means and said ice shaving means in said retracted position and said extended position.

4,372,618
SELF-ADVANCING MINERAL MINING INSTALLATION INCLUDING TILTING MACHINE SUPPORT
John T. Pearey, Pontefract, England, assignor to Union Special G.m.b.H., Stuttgart, Fed. Rep. of Germany
Continuation-in-part of Ser. No. 55,283, May 7, 1979, Pat. No. 4,272,129. This application Feb. 27, 1981, Ser. No. 238,700
Claims priority, application United Kingdom, Jul. 14, 1978, 29859/78
Int. Cl.³ E21C *29/02*
U.S. Cl. 299—31 **18 Claims**
1. A mineral mining installation includes a self-advancing roof support unit having a roof engaging member and a floor-engaging member, a forward base part independent of the floor-engaging member and connectible thereto, the forward base part being movable relative to the floor-engaging member, a machine supporting element adapted to be mounted on said forward base part at a level above that of the base part, the element being provided with means for supporting and guiding

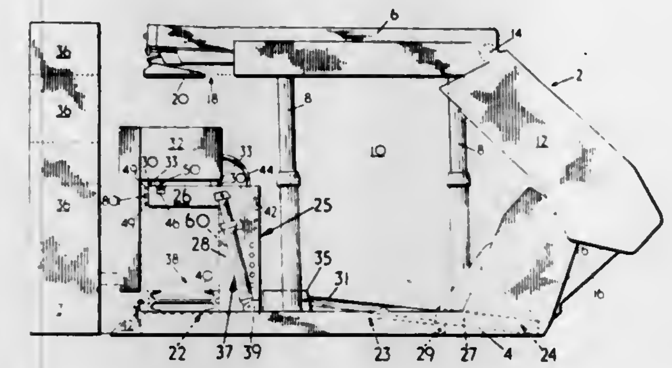

a mineral mining machine, a tilting jack operable between the machine supporting element and the roof support unit for varying the attitude of the machine supporting element, and a conveyor receiving area defined beneath the machine supporting element and adapted to locate a conveyor.

4,372,619
CHAIN HAVING LONGITUDINAL STIFFNESS USED WITH HAULING AND CUTTING EQUIPMENT
Gert Braun, Essen-Heisingen, Fed. Rep. of Germany, assignor to Halbach & Braun, Fed. Rep. of Germany
Filed Sep. 10, 1980, Ser. No. 185,900
Claims priority, application Fed. Rep. of Germany, Sep. 22, 1979, 2938408
Int. Cl.³ E21C *29/10*
U.S. Cl. 299—43 **6 Claims**

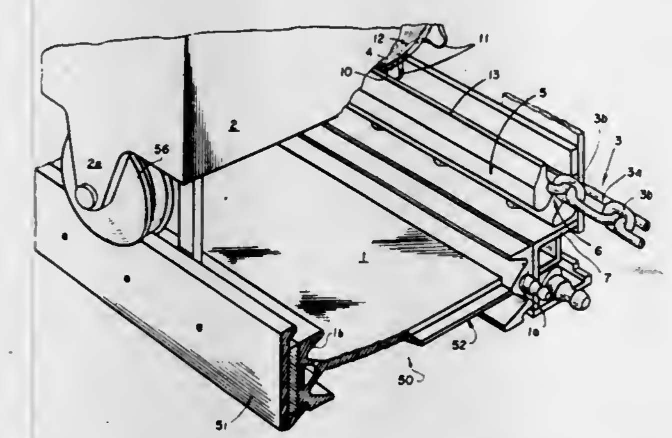

1. Hauling and cutting equipment, comprising a conveyor trough having a longitudinal side wall on each side, a support rail structure on at least one side of said trough having a chain guide groove therealong, a link chain extending in said chain guide groove along said support structure, a winning machine overlying said trough and guided on said rail structure, a drive for said winning machine including at least one chain wheel on said winning machine having teeth engaging in said link chain and having vertical link receiving divisions between said teeth, said link chain comprising a round link chain having alternate long horizontal links and short vertical links of a shorter length than said horizontal links, a clear division of said vertical links being substantially double the link diameter of said horizontal links except for a predetermined amount of play spacing, the engagement division of said chain wheel being substantially equal to the length of said vertical links, said vertical links have link arcs with an inside radius corresponding in the contact region with said horizontal link to the inside radius of the link arc of said horizontal link.

4,372,620
ANTI-LOCKING BRAKE SYSTEM FOR A VEHICLE
George Mekosh, Jr., Warrington, Pa., assignor to The Budd Company, Troy, Mich.
Filed Feb. 4, 1981, Ser. No. 231,458
Int. Cl.³ B60T *8/02*
U.S. Cl. 303—99 **8 Claims**

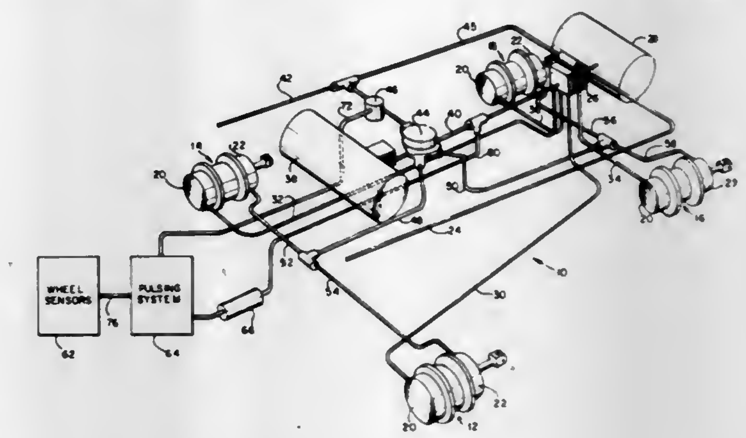

1. In combination with a source of service pressure for application to a brake to decelerate a vehicle,
(a) a control valve disposed to open and close, connected between said source of service pressure and said brake;
(b) a first source of pressure connected to maintain said control valve open to permit said service pressure to be applied to said brake;
(c) a fluid pulse generator for generating fluid pulses normally maintained inoperative by said first source of pressure;
(d) a wheel sensor responsive to the rotation of said wheel;
(e) said wheel sensor including normally closed switching means to maintain said pressure at said first source and responsive to deceleration of said wheel in excess of a predetermined rate to open and exhaust said pressure at said first source;
(f) a fluid gate valve connected to said fluid pulse generator;
(g) a second source of pressure connected to said fluid gate valve to apply fluid pressure therethrough to said fluid pulse generator when said first source of pressure is below a predetermined level to activate said fluid pulse generator to cause said fluid pulses to be applied to said control valve, and
(h) means for applying said fluid pulses to switch said control valve on and off to permit said service pressure to be applied to said brake to be switched on and off when said fluid pulses are being generated.

4,372,621
BALL AND SOCKET JOINTS
David J. R. Farrant, Radford Semele, England, assignor to Automotive Products Limited, Warwickshire, England
Filed Jul. 2, 1980, Ser. No. 165,346
Claims priority, application United Kingdom, Jun. 5, 1979, 7923438
Int. Cl.³ F16C *11/06*
U.S. Cl. 308—2 R **4 Claims**
1. A composite plastics support bearing for the ball of a ball and socket joint comprising:
a hard plastics bearing member for the ball in the socket; and
a relatively soft plastics cushion member held by said bearing member so as to be stressed by contact with the ball on assembly of the joint, said bearing member and cushion member being interlocked by co-operating pre-formed profiles of the members to prevent relative rotation, the

bearing member being a collar for the ball and the cushion member being a plug with radial arms which fits into and

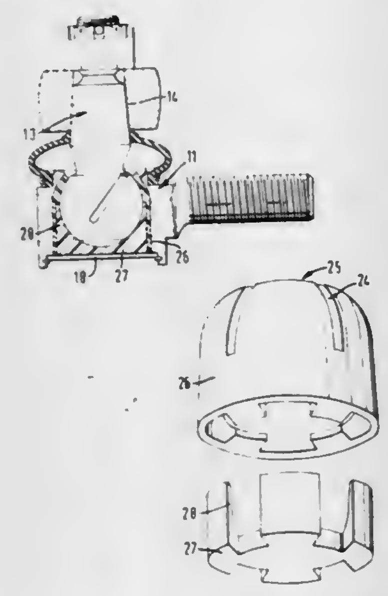

closes a correspondingly radially notched end of the collar.

4,372,622

RECIRCULATING BEARING ANTIFRICTION SYSTEM FOR WELL STRINGS

Alton E. Cheek, 1949 Vuelta Grande Ave., Long Beach, Calif. 90815

Filed Nov. 17, 1980, Ser. No. 207,740

Int. Cl.³ F16C *29/06*

U.S. Cl. 308—4 A **4 Claims**

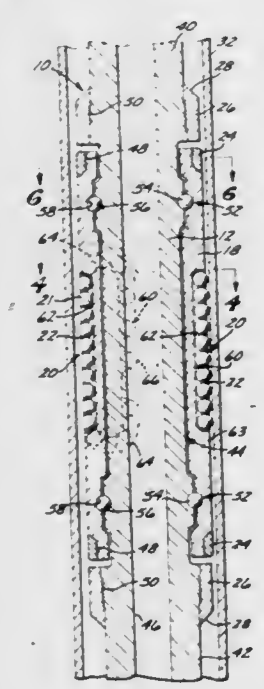

1. Apparatus for reducing friction between a well string and a well conduit containing such string which comprises:

a plurality of linear arrays of rollable bearing elements exposed on the outside of said string,

each of said arrays being generally longitudinally oriented on said string,

a plurality of endless bearing races in said string, said rollable bearing elements of each of said arrays being contained for free flowing movement in a respective said race, said arrays and their respective races being located at regularly spaced intervals about said string at a substantially common longitudinal position on said string,

generally cylindrical cage means within which said bearing races are contained, said cage means being peripherally located on said well string, and

generally cylindrical mandrel means on said string,

said mandrel means being generally coaxial within said cage means, and

annular rollable bearing means engaged between said cage means and said mandrel means.

4,372,623

RECIRCULATING BALL BEARING

Hartumut Koschmieder, Erlangen, Fed. Rep. of Germany, assignor to Industriewerk Schaeffler OHG, Herzogenaurach, Fed. Rep. of Germany

Continuation of Ser. No. 68,639, Aug. 22, 1979, abandoned. This application Mar. 4, 1982, Ser. No. 354,902

Claims priority, application Fed. Rep. of Germany, Aug. 30, 1978, 2837740

Int. Cl.³ F16C *29/06*

U.S. Cl. 308—6 C **13 Claims**

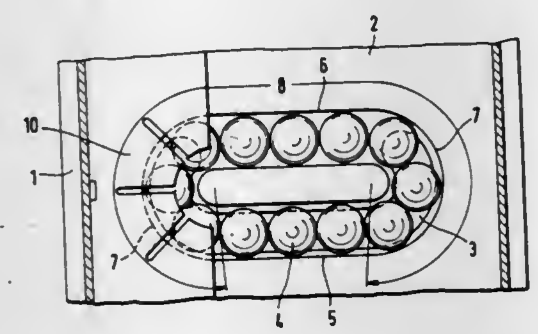

1. A ball bearing for longitudinally moveably mounting of a shaft comprising an outer race sleeve and a concentrically disposed guide sleeve with a plurality of ball races distributed over its circumference, each of the said ball races consisting of two straight race sections extending essentially parallel to the bearing axis and two semi-circular race sections connecting the two straight race sections and a plurality of balls guided in the races under load in only one straight race section and under no load in the remainder of the race section, the improvement comprising providing at least one elastically yielding spring element pressing on the unloaded balls in the remainder of the race section.

4,372,624

DYNAMIC O-RING SEAL

William J. Neilson, Murrieta, Calif., assignor to Smith International, Inc., Newport Beach, Calif.

Filed Jun. 4, 1981, Ser. No. 270,452

Int. Cl.³ F16C *33/74*

U.S. Cl. 384—94 **9 Claims**

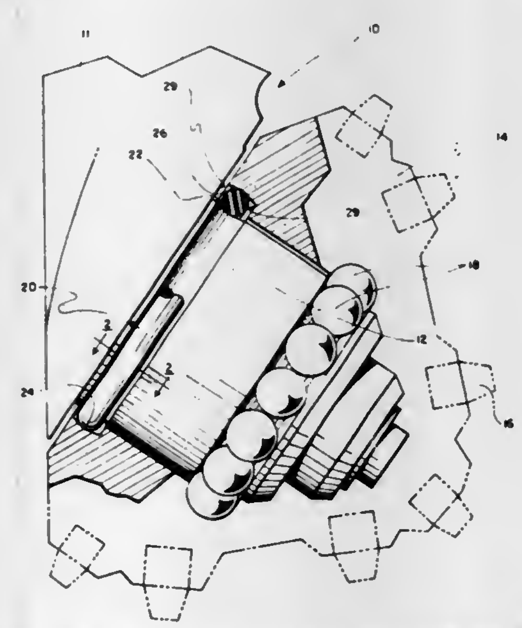

3. An O-ring shaft seal to isolate a lubricated bearing from an external environment comprising a resilient O-ring confined

within an annular chamber, said chamber being formed, between a bearing journal and a rotating part mounted thereon, said rotating part is a rock bit cutter cone, by the cooperation of two substantially radial surfaces and two concentric and substantially cylindrical surfaces formed between said journal and said rotating part, with at least one of said cylindrical surfaces being shaped substantially in a V with a vertex positioned about centrally on the cylindrical length, and directed so as to enlarge said annular chamber at said vertex, differential pressure across said O-ring moves said O-ring axially from said vertex thereby increasing the sqeeze on said O-ring thus resisting egress of lubricant from a bearing or ingress of a material from said external environment into said bearing.

4,372,625

METHOD AND APPARATUS FOR CHECKING MILL ROLL BEARING ASSEMBLY

Andrew J. Petros, Oakdale, Pa., assignor to Mesta Machine Company, Pittsburgh, Pa.

Filed Sep. 11, 1981, Ser. No. 301,372

Int. Cl.³ F16C *33/08*

U.S. Cl. 384—129 **4 Claims**

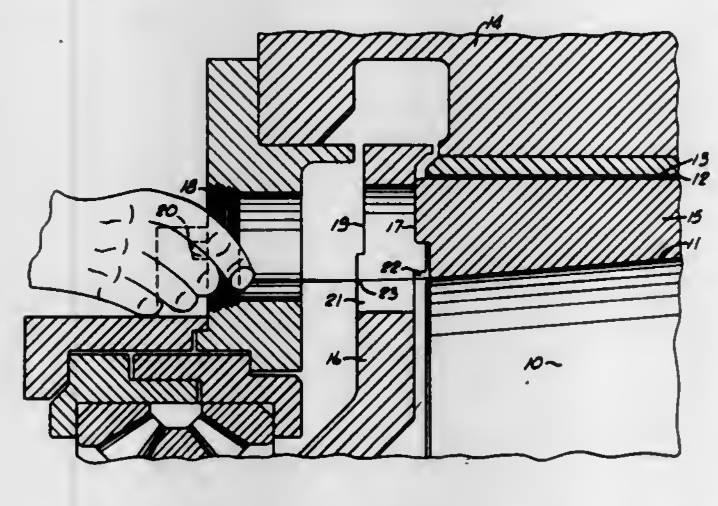

3. A mill roll bearing assembly including a mill roll having an end roll neck coaxially received in a bearing sleeve journaled for rotation therewith in a housed bearing and a sleeve retainer secured to the annular outside end of said sleeve and annularly covering the outside end of said sleeve where it annularly mates with the outside end of said roll neck within the housing for said bearing, the improvement comprising, an inspection passage through an upper end portion of said bearing housing which reveals the then rotatably positioned uppermost end portion of said retainer where it annularly mates with the outside end of said bearing sleeve, a removable closure for said housing inspection passage, and an inspection passage through the end of said retainer near the outer peripheral edge thereof which reveals a portion of the outside ends of said sleeve and roll neck where they annularly mate so that a feeler gauge may be inserted through said passages when aligned to check whether the roll neck is fully seated in the bearing sleeve.

4,372,626

TAPER JOURNAL BEARING FOR ROLLS FOR USE IN ROLLING MILLS

Andrew J. Petros, Oakdale, Pa., assignor to Mesta Machine Company, Pittsburgh, Pa.

Filed Sep. 11, 1981, Ser. No. 301,373

Int. Cl.³ F16C *33/04*

U.S. Cl. 384—129 **5 Claims**

1. A taper journal bearing for rolls for use in rolling mills, comprising a bushing housed in a roll bearing chock, a sleeve closely fitted onto a taper journal end of the roll, an oil film deposited between said bushing and said sleeve, and key means for fixing said sleeve to said roll; the improvement comprising, said key means consisting of a flat machined outer end of the taper on the surface of the taper journal of said roll in parallel to the taper thereof and underlying one end of said sleeve, a keyway in said one end of said sleeve and open to and registering with said flat, a key slidably received in said keyway and

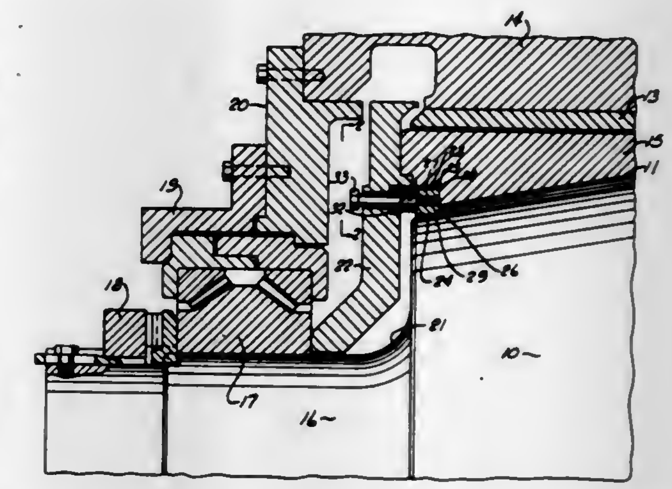

having a tapered flat surface mating in sliding engagement with said flat to create a wedging action against said flat when said key is slidably urged into said keyway.

4,372,627

RETRACTABLE DAMPER BEARING ASSEMBLY

Milton Hinden, Massapequa, N.Y., assignor to Duro Dyne Corporation, Farmingdale, N.Y.

Filed Nov. 12, 1981, Ser. No. 320,322

Int. Cl.³ F16C *23/02*

U.S. Cl. 384—260 **4 Claims**

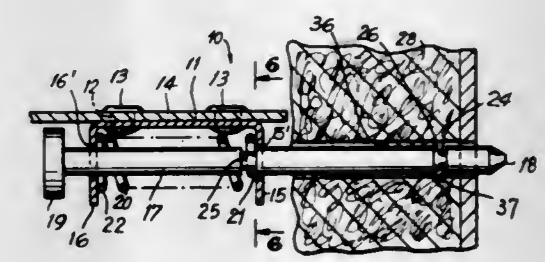

1. A retractable damper bearing assembly for supporting the undriven end of a damper blade for rotation in a duct, and particularly an insulation lined duct, comprising a mounting plate adapted to be secured to said blade, inner and outer leg members extending from said plate in spaced parallel relation, each said leg member including an aperture, said apertures being disposed in coaxial alignment parallel to said plate, a bearing rod slidably extending through said apertures and having a free end portion, said rod being shiftable between a retracted position whereat said free end is disposed outwardly adjacent said outer leg and an extended position whereat said free end of said rod is displaced outwardly from said retracted position, a first seat portion on said rod, said seat portion in said extended position of said rod being disposed inwardly of said outer leg, a coil spring member convoluted about said rod, said spring member being disposed between and having its opposed ends bearing against said legs, detent means on said spring member adjacent said outer leg, said detent means being biased into engagement with said seat portion responsive to movement of said rod from said retracted to said extended position.

4,372,628
BEARING ASSEMBLY

Heinz Kiener, Waigolshausen; Günter Neder, Schweinfurt, and Rainer Schürger, Schwanfeld, all of Fed. Rep. of Germany, assignors to SKF Kugellagerfabriken GmbH, Schweinfurt, Fed. Rep. of Germany

Filed Jun. 15, 1981, Ser. No. 273,607

Claims priority, application Fed. Rep. of Germany, Jun. 28, 1980, 3024397

Int. Cl.³ F16C *33/76*

U.S. Cl. 308—187.1 11 Claims

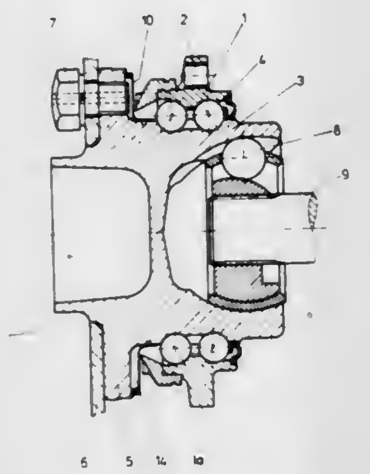

1. In a bearing assembly particularly for wheel bearings comprising an inner ring having at least one radially outwardly directed fastening flange, an outer ring spaced radially from the inner ring defining an annular space therebetween and having an axial end face spaced axially from said fastening flange, a plurality of rolling elements in the annular space between the rings, a cap secured to the inner ring having a radial section extending between the outer ring and fastening flange and having at least a portion thereof spaced axially from the radial face of said fastening flange to define a space therebetween and a seal ring fastened to the outer ring having a sealing lip which slides on the cap, said space between the radial cap section and the fastening flange of said inner ring being filled at least partly with means to inhibit heat transfer from the inner ring to the cap.

4,372,629
COMBINATION WIRE ENCLOSURE AND WIRE

Paul L. Propst, Holland; Donald A. Richardson, Kentwood, and Carl B. Hinrichs, Grand Haven, all of Mich., assignors to Stow/Davis Furniture Company, Grand Rapids, Mich.

Filed Nov. 10, 1980, Ser. No. 205,684

Int. Cl.³ A47B *17/00, 96/18*

U.S. Cl. 312—223 13 Claims

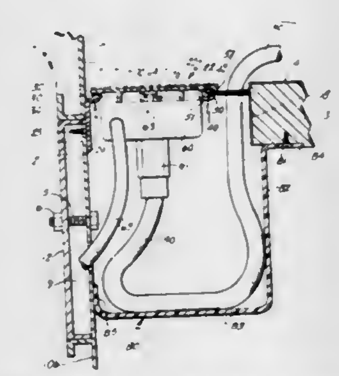

1. A wire enclosure assembly for furniture comprising two panel portions spaced from each other and defining a longitudinally extending slot with an outer surface area adjacent said slot, said slot having first and second sides;

a wire raceway adjacent said slot, and said slot communicating with said raceway and the space outwardly of said surface area; and

means for flexibly sealing said slot;

wherein the improvement comprises said sealing means comprising:

a plurality of flexible bristles in a brush-like configuration extending between said first and second sides and confined inwardly of said surface area, each of said bristles having a mounting end and a free end, a substantial proportion of said free ends being located immediately adjacent said first side;

means retaining said bristles in said configuration, said mounting ends being secured in said retaining means and said retaining means being located at said second side; and

said bristles and said retaining means completely covering said slot and permitting a wire extending through said slot to be pulled longitudinally along said slot.

4,372,630
PORTABLE EASEL DEVICE

William F. Fuhri, R.R. 5, Box 94, Liberty, Mo. 64068

Filed Nov. 14, 1980, Ser. No. 206,947

Int. Cl.³ A47B *97/04*

U.S. Cl. 312—231 16 Claims

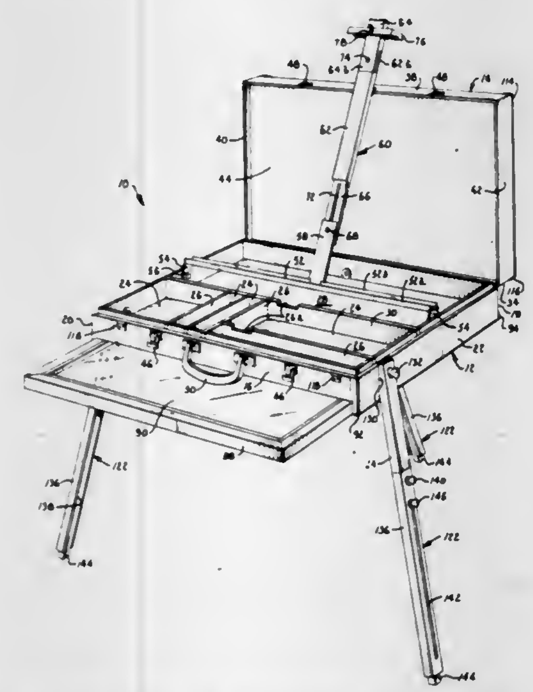

1. A portable easel arrangement comprising:

a carrying case having a lower section presenting a plurality of compartments for holding art supplies;

an upper section of the carrying case coupled with said lower section for hinged movement between an open position wherein said compartments are accessible and a closed position wherein the upper section covers the lower section;

a canvas rest mounted in said lower section for pivotal movement between a folded storage position wherein the canvas rest is contained in the lower section of the case and an extended position wherein the canvas rest presents a surface thereon for receiving the lower edge of a painting canvas;

an easel arm adapted for detachable connection to said canvas rest in generally upward extension therefrom to receive the back of a painting canvas resting on the canvas rest, said arm fitting in said carrying case for storage when detached from the canvas rest; and

means for detachably fastening a selected portion of said easel arm to said upper section in the open position of the latter to maintain said arm in a generally vertical orientation for receiving the back of a canvas resting on said canvas rest, said detachable fastening means holding said upper section and said canvas rest and easel arm rigidly in place in a configuration wherein said upper and lower sections and said easel arm cooperate to form a rigid triangular structure for supporting the painting canvas.

4,372,631
FOLDABLE DRAFTING TABLE WITH DRAWERS

Harry I. Leon, 924 Bowen St., NW., Atlanta, Ga. 30318

Filed Oct. 5, 1981, Ser. No. 308,146

Int. Cl.³ A47B *27/00;* A47F *5/12*

U.S. Cl. 312—231 9 Claims

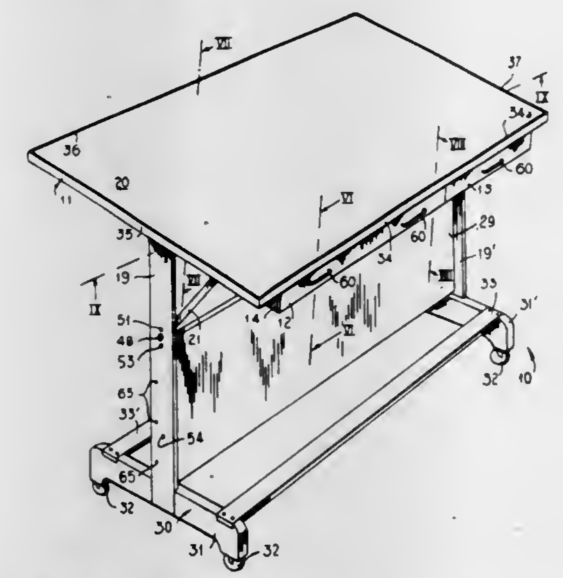

1. A drafting table which comprises:

(a) a board;

(b) at least one pair of support arms which are attached to the underside of the board, the support arms being spaced apart from, and disposed generally parallel to, each other; and

(c) a drawer which is insertable between the pair of support arms; each support arm having first slot and key means cooperating with second slot and key means on the drawer for supporting the drawer beneath the board, even when the drawer is tilted at an angle of several degrees from the horizontal,

(d) said first slot and key means further comprises at least one pair of keys and a pair of stays, each stay protruding from one of the support arms on a side thereof to which one of the keys is connected; each stay and the key proximate thereto being spaced apart, the opposing walls thereof being disposed generally parallel to each other; and

(e) said second slot and key means further comprises a pair of slots formed in the sides of each drawer and segments of the drawer disposed between each slot and the proximate upper edge of the drawer, each key cooperating with a slot as at least one of said segments cooperates with a pair of opposing walls, so that drag forces between a key and the slot with which it cooperates are augmented by interaction between a segment and at least one of the opposing walls proximate thereto, thereby braking movement of the drawer under the force of gravity alone.

4,372,632
SLIDE INTERLOCK AND CABINET STABILIZER

Paul Y. Villa, Santa Clara, and Alvin D. Day, San Jose, both of Calif., assignors to Sperry Corporation, New York, N.Y.

Filed Feb. 2, 1981, Ser. No. 230,580

Int. Cl.³ A47B *88/00;* E05B *65/46*

U.S. Cl. 312—311 3 Claims

1. A cabinet assembly comprising: a cabinet including a drawer movable between stored and other positions; vertically disposed interlock means slidably mounted to said cabinet and movable between raised and lowered positions; a brace locking peg and a chassis locking peg rigidly affixed to said interlock means; and horizontally disposed brace means slidably mounted to said cabinet, said brace means having a hole formed therein and being movable to an extended position for supporting said cabinet from tipping and to a stowed position for storage within the cabinet;

wherein said cabinet assembly is so constructed and arranged that in the situations where said brace means is at the stowed position or any position intermediate the stowed and extended positions, said brace locking peg overrides the brace means whereby said interlock means is held in said raised position and said chassis locking peg is disposed for locking said drawer in the stored position; where said brace means is moved to the extended position, said brace locking peg falls into said hole of the brace means so that said brace means is locked at the extended

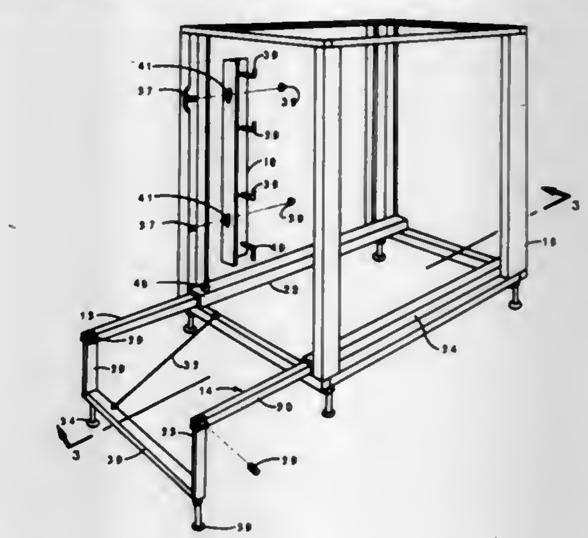

position and said interlock means is moved to said lowered position whereby said chassis locking peg is disposed under the drawer and said drawer is unlocked for moving from said stored position; where said drawer is at said other position, said chassis locking peg is blocked by the drawer from being raised thereby preventing said interlock means from moving from said lowered position; and where the drawer is at said stored position and said interlock means is moved back to said raised position whereby said brace locking peg is lifted from said hole, said brace means is unlocked for moving from said extended position and said chassis locking peg is disposed for locking said drawer.

4,372,633
HIGH CURRENT TRANSFER ROLL RING ASSEMBLY

Terry S. Allen, and Peter E. Jacobson, both of Phoenix, Ariz., assignors to Sperry Corporation, New York, N.Y.

Filed Apr. 17, 1981, Ser. No. 255,021

Int. Cl.³ H01R *39/28*

U.S. Cl. 339—5 M 13 Claims

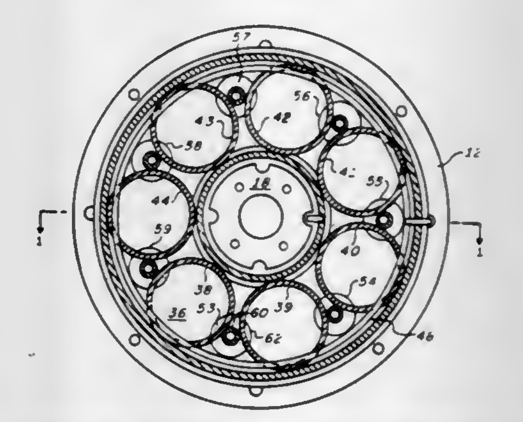

1. A full rotational freedom conductor assembly for conducting electrical energy between a pair of members relatively rotatable about a common axis thereof comprising

(a) first and second circular, coplanar electrically conductive rings, one thereof being disposed on one of said members and the other thereof being disposed on the other said

members, providing a relatively large radial gap therebetween;

(b) a plurality of resilient, filamentary, coplanar conductive circular loops disposed in said gap in rolling contact with said rings for providing electrical conductivity between said pair of rings;

(c) loop separating means disposed in rolling contact with said circular loops and arranged to prevent physical contact between adjacent circular loops;

(d) retaining means disposed on at least one of said members and in rolling contact with said loop separating means for holding said loop separating means in contact with said circular loops.

4,372,634

TILT LATCH ZERO INSERTION FORCE CONNECTOR ASSEMBLY

Leon T. Ritchie, Mechanicsburg; Clair W. Snyder, Jr., York, both of Pa.; Thurston H. Toeppen, Poughkeepsie, N.Y., and John A. Woratyla, Camphill, Pa., assignors to AMP Incorporated, Harrisburg, Pa.

Filed Mar. 4, 1981, Ser. No. 240,524

Int. Cl.³ H01R *9/09*

U.S. Cl. 339—17 C **8 Claims**

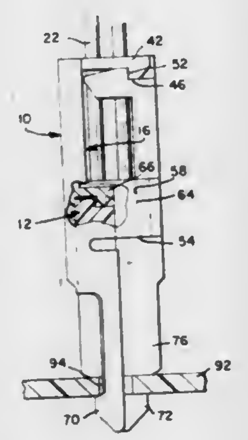

8. In combination with a printed circuit board having an array of conductive holes, an electrical connector assembly for making zero insertion force connection with said circuit board, said electrical connector assembly comprising:

a pair of identical elongated housing members of rigid insulative material each having a plurality of terminal passageways extending from a rear end through said housing member to open on a front mating face, each said passageway being fully enclosed adjacent the mating face and outwardly open to form a channel shape at the rear end remote from said mating face;

a like plurality of terminals each mounted in a respective one of said passageways, each terminal having a forwardly directed cantilever beam extending from said mating face and an insulation displacing conductor engaging rear end portion lying in and accessible from said channel shape at said rear end; and

a pair of hermaphroditic cover members each having means engaging a respective one of said housing members to form a subassembly, latching means detachably securing said cover members together, and mounting legs receivable in mounting apertures in said circuit board whereby said subassemblies are initially individually engaged at a tilted angle with respect to the plane of said circuit board with the beams of the terminals extending into said conductive holes making only incidental contact therewith and the subassemblies rotated with respect to one another and to said circuit board to bring said cover members into locking engagement while bringing the beams into engagement with the walls of the respective conductive holes.

4,372,635

MULTIPLE CONNECTOR PLUG REMOVAL DEVICE

John E. Waldschmidt, New Market, Minn., assignor to Thermo King Corporation, Minneapolis, Minn.

Filed Mar. 5, 1981, Ser. No. 240,653

Int. Cl.³ H01R *13/62*

U.S. Cl. 339—45 M **6 Claims**

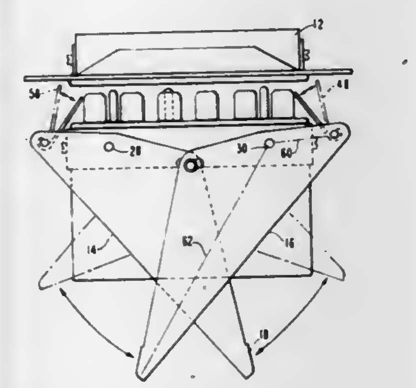

1. A multiple connector plug removal device for removing a plug from a complementary plug, comprising:

a frame member encompassing the removable plug adjacent the face of the plug and secured to said plug;

a pair of one-piece, U-shaped levers straddling the frame and plug and disposed in generally mirror image relation to each other, each lever including opposite arms and a bight handle portion, the opposite arms being independently pivotally secured to the opposite sides of the frame at fulcrum points spaced inwardly from the ends of the frame a minor portion of the length of the frame so that with movement of the levers from a plug-inserted-position to a plug-removed-position the levers function as first class levers with the distal ends of the arms opposite the handle portions moving in an arc toward said complementary plug and with the handles moving in a much larger arc away from the complementary plug;

means pivotally securing each arm on one side of the frame to the other arm on the same side of the frame at a generally centered location along the length of the frame to compel movement of the levers concurrently; and

a pusher member pivotally secured along one of its edges by each lever at the lever distal end and located beyond the end of the plug, each pusher member being biased to urge its free edge inwardly, the free edges of said pusher members abutting structure at the ends of said complementary plug when the levers are in their plug-inserted-positions.

4,372,636

BATTERY CONNECTOR

Raymond A. Dufresne, Phoenix, Ariz., assignor to Terry R. Eberts; Herbert E. Haynes, Jr. and Matthew L. Ajeman, all of Phoenix, Ariz., S

Continuation-in-part of Ser. No. 124,979, Feb. 27, 1980, and Ser. No. 135,348, Mar. 31, 1980, abandoned. This application Oct. 14, 1980, Ser. No. 196,868

Int. Cl.³ H01R *11/24*

U.S. Cl. 339—237 **6 Claims**

1. A connector for direct attachment of the conductive strands of a battery cable to the terminal post of an electric storage battery comprising:

(a) connector body means having a bore for axially receiving the terminal post of the electric storage battery;

(b) means formed in said connector body means through which the conductive strands of the battery cable are introducable into the bore thereof for bearing engagement with the peripheral surface of the terminal post of the electric storage battery when the terminal post is axially received in the bore of said connector body means; and

(c) said connector body means including means for exerting a pressurizing force to provide a conductive contact between the conductive strands of the battery cable and the terminal post when the conductive strands of the battery cable are introduced into the bore of said connector body means and the terminal post is axially received therein, said connector body means comprising:

(i) a clamping cap having the bore of said connector body means formed therein with the bore being blind, said clamping cap including a top from which at least a pair of resiliently deflectable legs extend with the legs configured to substantially circumscribe the blind bore formed in said clamping cap;

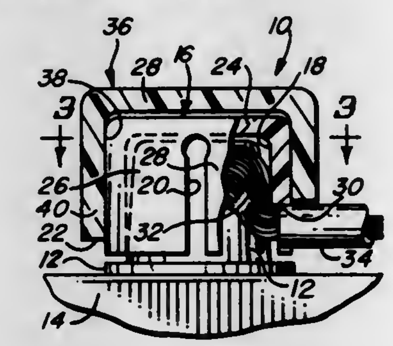

(ii) said clamping cap having a notch formed centrally in the extending edge of one of the pair of resilient deflectable legs thereof with said notch being said means through which the conductive strands of the battery cable are introducable; and

(iii) said clamping cap having its blind bore sized so that when the conductive strands of the battery cable are introduced therein an interference fit is provided for the axial reception of the terminal post of the electric storage battery in the blind bore of said clamping cap.

4,372,637

BOND SHIELD TERMINAL

David Lane, Greensboro; Mervin Woodward, Winston-Salem, and Jerry B. Kilpatrick, Greensboro, all of N.C., assignors to AMP Incorporated, Harrisburg, Pa.

Filed Apr. 10, 1981, Ser. No. 252,769

Int. Cl.³ H01R *4/48*

U.S. Cl. 339—244 R **18 Claims**

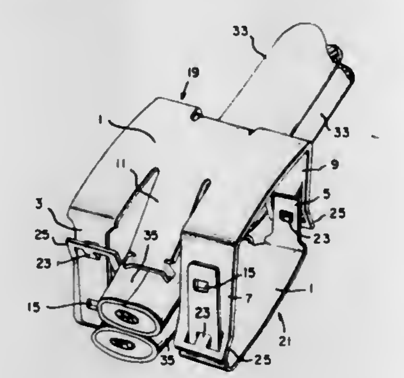

1. In a bond shield terminal formed from a pair of hermaphroditic interconnectable elements, each element comprising:

(a) a substantially flat base portion having four corner regions,

(b) a pair of arms extending from adjacent ones of said corners normal to said base portion, each of said arms having aperture means formed therein,

(c) a pair of legs extending from the other of said corners normal to said base portion, each of said legs having receiving means for receiving a said arm and latching means within said receiving means for entering a said aperture means in said received arm, and

(d) spring arm means depending from said base portion in the direction of said arms and legs for securing a wire.

4,372,638

ELECTRICAL CONNECTOR FOR TAPPING INTO A FUSE BLOCK

Lawrence J. Sohler, 15848 Moorpark St., Encino, Calif. 91436

Filed Feb. 12, 1981, Ser. No. 233,977

Int. Cl.³ H01H *85/46;* H01R *11/00, 13/115*

U.S. Cl. 339—273 F **7 Claims**

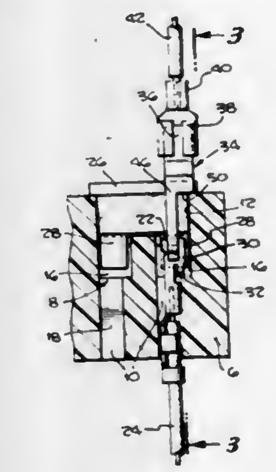

1. An elecrical connector for use with a fuse block having a recess defined by spaced opposed side walls, a pair of fuse blade contact elements in said recess adjacent said side walls and a fuse body in the upper portion of said recess above said pair of fuse contacts, said fuse body having a contact blade depending therefrom and removably received between said fuse blade contact elements, comprising:

an electrically conductive clip having an upper portion adapted to connect with an electrical connector,

a pair of legs extending downwardly from saidupper portion and having inner faces comprising elecrical contact surfaces,

said legs being spaced and of a length to straddle said fuse body and said spring contact elements,

and said legs having at least portions thereof with sufficient lateral dimension to wedge between their respective spring contact elements and the side walls of said recess, causing the legs to grip said fuse blade contact elements and biasing the fuse blade elements to grip the fuse blade.

4,372,639

DIRECTIONAL DIFFUSING SCREEN

Kenneth C. Johnson, El Cerrito, Calif., assignor to Hughes Aircraft Company, Culver City, Calif.

Filed Jun. 3, 1981, Ser. No. 270,159

Int. Cl.³ G02B *5/32*

U.S. Cl. 350—3.7 **5 Claims**

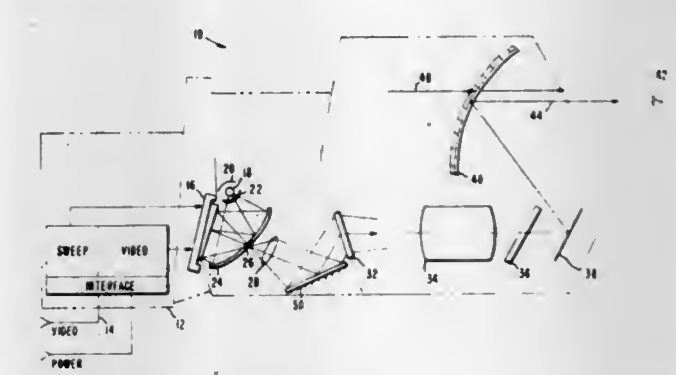

1. An optical system comprising:

an information carrying liquid crystal screen at a first image focal plane, means for driving said liquid crystal screen to provide real-time information;

means for illuminating said information carrying liquid crystal screen with substantially monochromatic light;

a holographic optical element at a second image focal plane;

lens means positioned between said information carrying liquid crystal screen and said holographic optical element for projecting substantially monochromatic light carrying the real-time information carried by said information carrying liquid crystal screen at said first image focal plane onto said holographic optical element at said second focal plane, said projection means providing light rays from said real-time information containing liquid crystal screen to said holographic optical element; and

diffraction means in said holographic optical element for diffracting a substantial portion of the incoming substantially monochromatic light to a viewing pupil by means of which a ray of light incident on any particular point on said holographic optical element from the lens means is redirected and diffused into a predetermined directional range intercepting a designated pupil region in space, whereby the light diffracted from said incident beam by said holographic optical element is substantially directed within and illuminates said pupil region with selected intensity distribution so that the information at said information carrying liquid crystal screen is viewable at said viewing pupil as diffused information with substantially uniform illumination across said pupil.

4,372,640

LINE MAKER WITH LASER SOURCE

Eugene F. LaCroix, 5611-240th SE., Woodinville, Wash. 98072
Filed Mar. 23, 1981, Ser. No. 246,389
Int. Cl.³ G02B *27/17*
U.S. Cl. 350—6.3 **3 Claims**

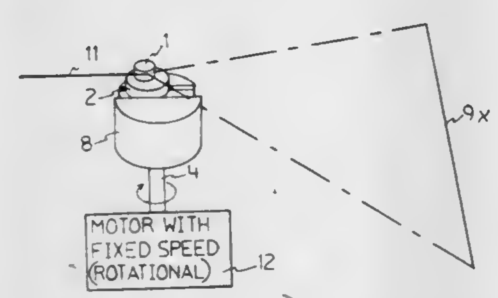

1. Means for drawing a visually continuous line upon a regularly replaced object such as a log or the like being cut into lumber comprising:
a fixed laser source an appropriate distance from the desired line display, a cylindrical lens mounted between the laser source and the desired line display, said cylindrical lens mounted to a rotating body with its axis perpendicular to the desired line display, and parallel to but non-colinear with the axis of rotation such that it oscillates through the laser beam to form a line of the desired length.

4,372,641

OPTICAL WAVEGUIDE TERMINATION

Leo F. Johnson, Bedminster, and LeGrand G. Van Uitert, Morris Township, Morris County, both of N.J., assignors to Bell Telephone Laboratories, Incorporated, Murray Hill, N.J.
Filed Jun. 27, 1980, Ser. No. 163,789
Int. Cl.³ G02B *5/14*
U.S. Cl. 350—96.12 **13 Claims**

1. Optical communications device comprising a substrate-supported waveguide which is elongated in a direction of light propagation and which comprises a central portion in which index of refraction decreases by less than 1 percent in directions away from a center line of said central portion, said device being characterized in that a portion of said waveguide, here designated as an absorbing portion, comprises absorbing centers which absorb optical radiation at one or several wavelengths, said absorbing centers being present in said portion so as to result in gradually increasing interaction between said absorbing centers and light propagating in said direction and said absorbing centers being present in said portion in an amount sufficient for attenuation of said radiation by at least 30 decibel over a distance which is less than or equal to 10 centimeter and greater than or equal to 0.1 millimeter.

4,372,642

MULTIPLE THIN FILM ABSORPTION OF REFLECTED SUBSTRATE MODES IN WAVEGUIDE SYSTEM

Arnold H. Singer, and Ronald T. Holm, both of Alexandria, Va., assignors to The United States of America as represented by the Secretary of the Navy, Washington, D.C.
Filed Nov. 25, 1980, Ser. No. 210,188
Int. Cl.³ G02B *5/174*
U.S. Cl. 350—96.12 **21 Claims**

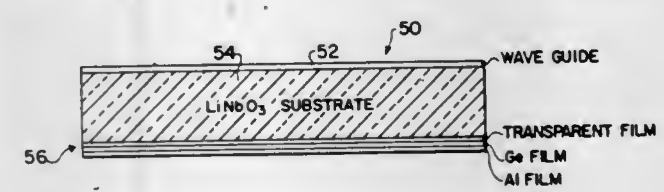

12. An optical waveguide system with reduced substrate reflections comprising:
a substrate;
a thin-film optical waveguide on the frontside of the substrate for carrying light therethrough; and
an absorbing antireflective coating on the backside of the substrate comprising:
a first layer of transparent material;
a second layer of material being moderately lossy; and
a third layer of material being highly lossy;
whereby light of substantially a single wavelength having leaked into the substrate and incident to the backside thereof over a broad range of angles is substantially absorbed with minimal reflection.

4,372,643

STANDING-WAVE, VELOCITY-MATCHED GATE

Pao-Lo P. Liu, Eatontown, and Enrique A. Marcatili, Rumson, both of N.J., assignors to Bell Telephone Laboratories, Incorporated, Murray Hill, N.J.
Filed Jun. 23, 1980, Ser. No. 161,761
Int. Cl.³ G02B *5/174*
U.S. Cl. 350—96.14 **11 Claims**

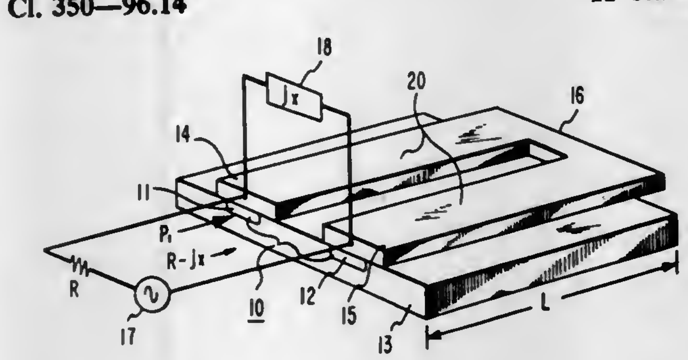

1. In combination, apparatus including:
a pair of coupled optical wavepaths (**11, 12** and **60, 61**) and, means (**20, 70**), supportive of travelling electrical waves, for locally modulating the coupling between said wavepaths;
Characterized in that said travelling wave means is terminated to produce a standing wave therealong.

4,372,644

STRIP DIODE LASER WITH REACTANCE FREE FIBER OUTPUT

Hans-Georg Unger, Brunswick, Fed. Rep. of Germany, assignor to Licentia Patent-Verwaltungs-GmbH, Frankfurt, Fed. Rep. of Germany
Filed Nov. 10, 1980, Ser. No. 205,241
Claims priority, application Fed. Rep. of Germany, Nov. 10, 1979, 2945466
Int. Cl.³ G02B *7/26*
U.S. Cl. 350—96.20 **7 Claims**

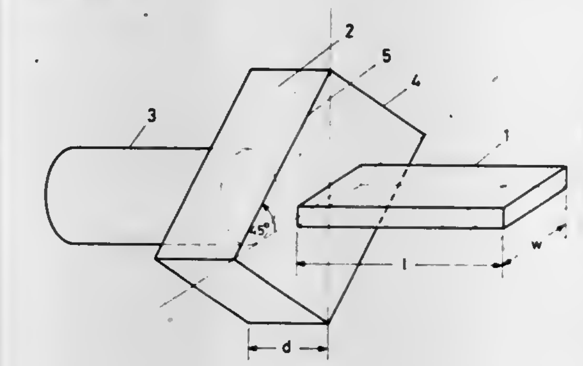

1. In an arrangement including a strip diode laser having an optical fiber coupled to its output for transmission of the output signals of said laser the improvement comprising means, inserted between said output of said laser and input of said optical fiber, for converting the linearly polarized wave at said output of said laser to a circularly polarized wave at said input of said optical fiber.

4,372,645

OPTICAL FIBER WITH ENHANCED MODE COUPLING

Stewart E. Miller, Locust, N.J., assignor to Bell Telephone Laboratories, Incorporated, Murray Hill, N.J.
Continuation-in-part of Ser. No. 885,445, Mar. 10, 1978, Pat. No. 4,308,045. This application Aug. 10, 1981, Ser. No. 291,311
Int. Cl.³ G02B *5/172*
U.S. Cl. 350—96.30 **4 Claims**

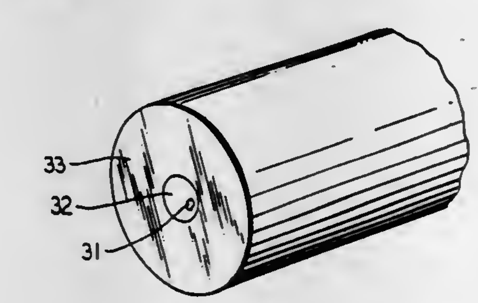

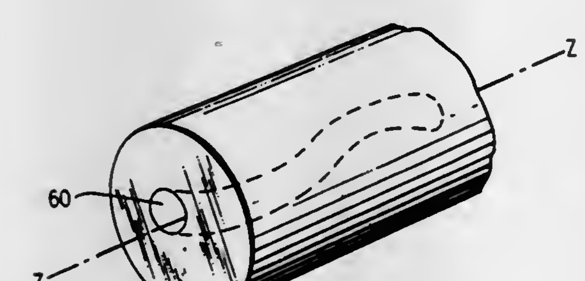

1. A multimode optical fiber comprising:
an inner core region surrounded by an outer cladding region of lower refractive index;
CHARACTERIZED IN THAT:
said fiber includes a third region whose refractive index is different than that of said core region;
and in that said third region intercepts a portion of the optical wave field guided by said core and meanders about the longitudinal axis of said fiber in a manner to cause mode coupling.

4. A multimode optical fiber comprising:
an inner core region surrounded by an outer cladding of lower refractive index;
CHARACTERIZED IN THAT
said core region meanders about the longitudinal axis of said fiber such that the spatial variation of said region in the longitudinal direction has significant spectral components at the beat wavelengths of the modes guided by said multimode fiber.

4,372,646

BIREFRINGENT ELECTROMAGNETIC TRANSMISSION LINE THAT PRESERVES THE STATE OF POLARIZED RADIATION PROPAGATING THEREIN

Virgil H. Strahan, Orange; Kenneth A. James, Corona del Mar, and William H. Quick, La Habra Heights, all of Calif., assignors to Rockwell International Corporation, El Segundo, Calif.
Filed Jul. 31, 1980, Ser. No. 174,088
Int. Cl.³ G02B *5/172*
U.S. Cl. 350—96.31 **5 Claims**

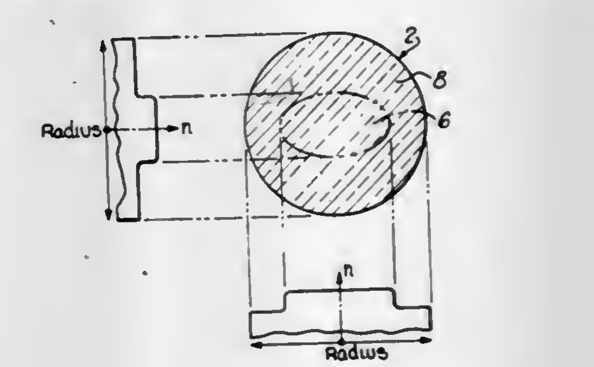

1. The structure for a geometrically configured birefringent optical waveguide comprising:
a cylindrically symmetrical rod of optically transmissive material, and
an index of refraction altered region of oblong cross-section comprising implanted ions selectively located within said rod to cause the respective profiles of the indices of refraction along two orthogonal axes of said rod to be different from one another.

4,372,647

SINGLE MODE OPTICAL FIBERS

Katsunari Okamoto; Takao Edahiro, both of Mito; Akio Kawana, Komae, and Tetsuo Miya, Mito, all of Japan, assignors to Nippon Telegraph & Telephone Public Corporation, Tokyo, Japan
Filed Oct. 1, 1980, Ser. No. 192,704
Claims priority, application Japan, Oct. 8, 1979, 54-130452; Jul. 14, 1980, 55-95956
Int. Cl.³ G02B *5/14*
U.S. Cl. 350—96.33 **7 Claims**

1. A single mode oritical fiber comprising core having a refractive index of **n1**, a cladding surrounding said core and having a refractive index of **n2** and an intermediate layer interposed between said core and cladding and having a refractive index of **n3**, wherein said refractive indices **n1, n2** and **n3** and selected to satify the following relations.

$$0.5<\Delta 1<1.5$$

$-0.3 > \Delta 2 > -1.0$

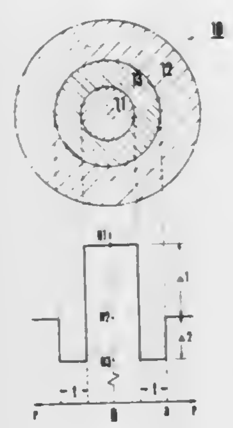

where

$$\Delta 1 = \frac{n1 - n2}{n1} \times 100\% \text{ and } \Delta 2 = \frac{n3 - n2}{n2} \times 100\%$$

4,372,648

OPTICAL FIBRES

Philip W. Black, Bishop's Stortford, England, assignor to International Standard Electric Corporation, New York, N.Y.

Filed Oct. 29, 1980, Ser. No. 201,944

Claims priority, application United Kingdom, Oct. 29, 1979, 7937477

Int. Cl.³ G02B *5/172*

U.S. Cl. 350—96.33 **15 Claims**

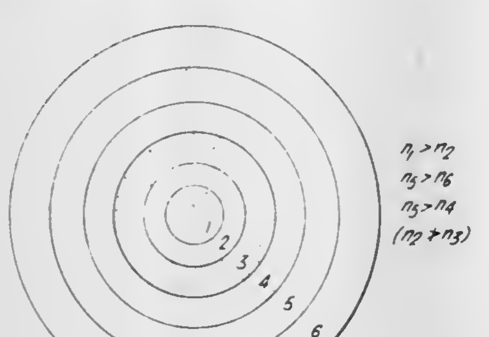

1. An optical fibre having an inner waveguiding structure of irradiation resistant material consisting of a transparent optical core surrounded by a lower refractive index optical cladding, which inner waveguiding structure is separated, by an intermediate layer of irradiation sensitive material rendered optically absorbing by irradiation, from an outer waveguiding structure also of irradiation resistant material consisting of an annular transparent optical core sandwiched between lower refractive index transparent inner and outer cladding layers of lower refractive index.

4,372,649

EXTENDED AREA DIFFRACTIVE SUBTRACTIVE COLOR FILTERS

Truman F. Kellie, Lakeland, Minn., assignor to Minnesota Mining and Manufacturing Company, St. Paul, Minn.

Filed May 22, 1978, Ser. No. 908,242

Int. Cl.³ G02B *5/18*

U.S. Cl. 350—162 SF **9 Claims**

1. A method for forming a subtractive color filter suitable for selective attenuation of predetermined wavelengths comprising

(a) directing a pair of mutually coherent beams of radiation having a substantially constant intensity over a given area onto a surface of a photographic medium to form a latent image of a standing wave interference fringe field pattern in which the peak image intensity is substantially constant across an area greater than a square of 50 cm²,

(b) processing said medium to form a permanent image of said field pattern as regions of uniformly varying optical density,

(c) applying a transparent barrier layer to the exposed surface of said medium,

(d) applying a positive photoresist material onto the exposed surface of the barrier layer to form thereon a photoresist layer having a substantially uniform thickness in the range of 0.50–2.00 μm±0.05 μm,

(e) directing radiation through the processed medium to form in the photoresist layer a latent image of the optical density image in said medium, under controlled time and exposure conditions such that the total exposure in the

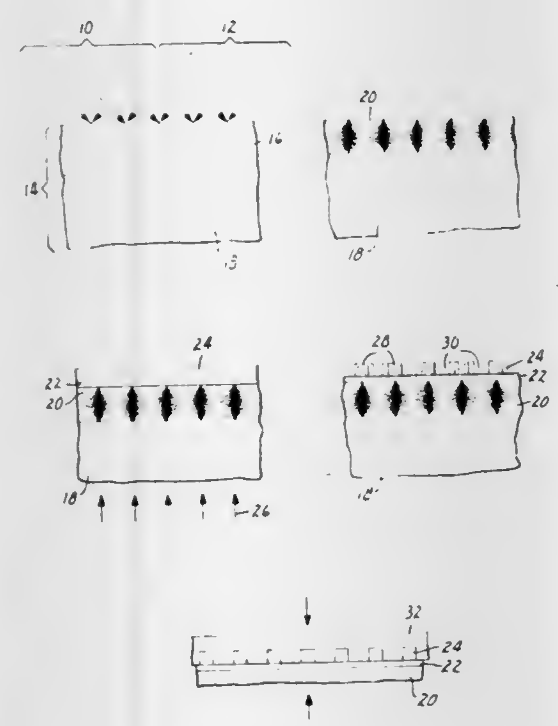

photoresist layer results in an aspect ratio in exposed regions in the photoresist layer corresponding to adjacent regions of said optical density image ranging between 0.25 and 0.75,

(f) processing said photoresist layer to remove substantially all of the exposed portions corresponding to the transmissive portions of said optical density image, forming therein a surface relief pattern, having a succession of peaks and valleys, the distance therebetween being substantially equal to the thickness of the layer, and

(g) replicating said pattern into the surface of a polymeric web to form on a surface thereof an optically detectable, width controlled periodic surface relief pattern corresponding to said interference fringe field pattern and extending uniformly and free of discontinuities over a square area greater than 50 cm².

9. A subtractive color filter according to the method of claim 1.

4,372,650

MOUNTING FOR MICROSCOPE LENS

Robert Lisfeld, Greifenstein-ulm, and Reinhold Bender, Solms, both of Fed. Rep. of Germany, assignors to Ernst Leitz Wetzlar GmbH, Wetzlar, Fed. Rep. of Germany

PCT No. PCT/DE80/00004, § 371 Date Sep. 19, 1980, § 102(e) Date Sep. 18, 1980, PCT Pub. No. WO80/01512, PCT Pub. Date Jul. 24, 1980

PCT Filed Jan. 12, 1980, Ser. No. 207,970

Claims priority, application Fed. Rep. of Germany, Jan. 19, 1979, 7901401[U]

Int. Cl.³ G02B *7/02;* F16L *39/00*

U.S. Cl. 350—252 **5 Claims**

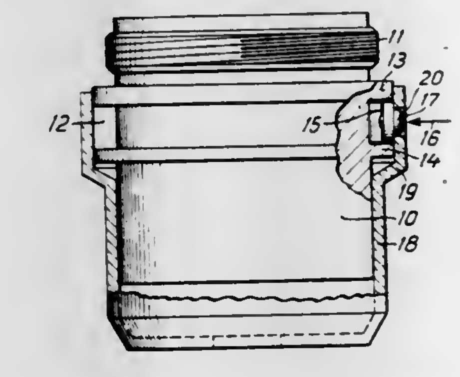

1. A microscope objective mount comprising:

a mount body with thread means for screwing said mount onto a microscope, said mount body having an annular groove therearound;

a tubular sleeve surrounding said mount body and covering substantially the entire length of said mount body when said mount body is screwed onto a microscope, said sleeve having a hole therethrough; and

detent means engaging said groove on said mount body and said hole through said sleeve for releasably and rotatably securing said sleeve on said mount body, said detent means being releasable only with the aid of an opening tool through said hole;

whereby said sleeve is freely rotatable around said mount body and cannot be removed from said mount body without an opening tool, and said mount cannot be unscrewed from said microscope with said sleeve thereon.

4,372,651

SOLAR COLLECTOR MODULE

Joseph A. Hutchison, Dallas, Tex., assignor to Solar Kinetics, Inc., Dallas, Tex.

Division of Ser. No. 86,314, Oct. 19, 1979, Pat. No. 4,297,003. This application Jun. 22, 1981, Ser. No. 275,638

Int. Cl.³ G02B *7/18, 5/10*

U.S. Cl. 350—292 **3 Claims**

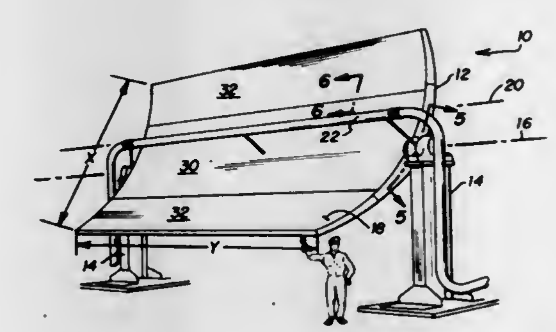

1. A solar collector comprising: at least two elongated modules having a reflective surface on the front sides thereof wherein the reflective surfaces of said modules conform to a particular reflective shape; connector means comprising channel members fastened to the abutting edges of each of said modules adjacent the connection point and extending the length thereof; a connector extending into the interior of said channel members and being fastened to each of said modules by fasteners.

4,372,652

LAMINATED GAGE GLASS ASSEMBLY

Robert A. Pontefract, Chelmsford, Mass., assignor to White Consolidated Industries, Inc., Cleveland, Ohio

Continuation-in-part of Ser. No. 53,102, Jun. 28, 1979, abandoned. This application Dec. 2, 1980, Ser. No. 212,323

Int. Cl.³ G02B *5/00;* G01F *23/02;* G02B *7/00*

U.S. Cl. 350—319 **21 Claims**

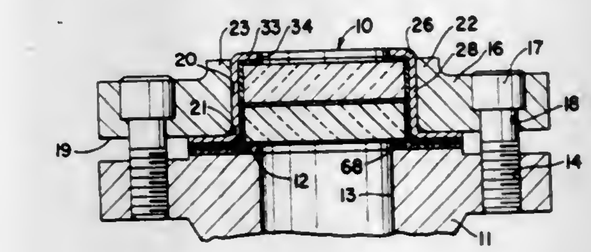

1. A lens assembly for a sight glass comprising a ferrule, said ferrule having an axially extending sidewall with an outwardly extending flange at one end and an inwardly extending flange at the other end, a first lens in said ferrule having a first side adjacent said inwardly extending flange, a second lens in said ferrule having a first side adjacent said outwardly extending flange, the opposite sides of said lenses being adjacent each other, and a sheet of transparent flexible plastic material extending between said lenses, between the outer periphery of said second lens and said ferrule sidewall and extending along the outer side of said outwardly extending flange.

4,372,653

POLARIZING BEAM SPLITTING PHASE TRANSITION OPTICAL MODULATOR

John C. Wert, III, 3101 Kemp Rd., Dayton, Ohio 45431

Filed Dec. 12, 1978, Ser. No. 968,875

Int. Cl.³ G02F *1/19;* G02B *5/30*

U.S. Cl. 350—385 **2 Claims**

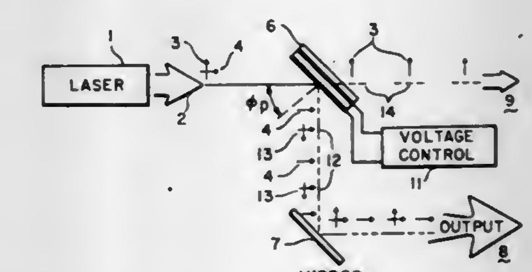

1. A polarizing modulator for altering the polarization of the reflected portion of an unpolarized incident luminous energy beam striking said modulator, comprising:

an optical element having a substantially flat incident surface, and fabricated with a substrate which is substantially transparent at the wavelength of said luminous energy beam and has deposited thereupon a thin film of transition material from the group consisting of VO, VO_2, VO_2O_3, V_3O_5, V_4O_7, V_5O_9, V_6O_{11}, V_7O_{13}, V_8O_{15}, Ti_2O_3, Ti_4O_7, NbO_2, $FeSi_2$, VO_2NbO_2, $V_{1-x}Mo_xO_2$, VO_2-TiO_2, V_2O_3-Ti_2O_3, $V_{1-x}Ge_xO_2$, $V_{1-x}Nb_xO_2$, $V_{1-x}Cr_xO_2$, $(Cr_xV_{1-x})_2O_3$ and $V_{1-x}Ti_xO_2$;

said flat surface of the optical element oriented at Brewster's angle with respect to said incident unpolarized luminous energy beam, where said Brewster's angle is a constant defined by the material forming the exterior of said flat surface; and

a means for stimulating said transitional material between reflective and transmissive states.

4,372,654
TELEPHOTO ZOOM LENS

Yoshisato Fujioka, Higashikurume, and Atsushi Kawamura, Yokosuka, both of Japan, assignors to Ricoh Company, Ltd., Tokyo, Japan

Filed May 11, 1981, Ser. No. 262,652
Claims priority, application Japan, May 15, 1980, 55-64636
Int. Cl.[3] **G02B** *15/16*
U.S. Cl. 350—427 **4 Claims**

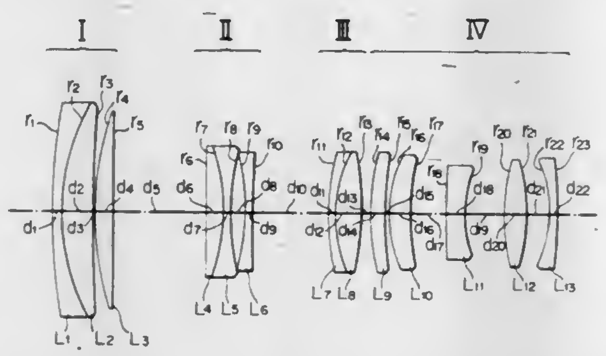

1. A telephoto zoom lens comprising a variable magnification system including a first group which does not move during a zooming operation, but moves only during a focussing operation and generally having a positive refractive power and serving as a focussing group, a second group generally having a negative refractive power to serve as a variator lens group and disposed for movement along an optical axis during a zooming operation, the second group principally utilized to convert a focal length, and a third group generally having a positive refractive power to serve as a compensator lens group, the third group being disposed for movement along the optical axis during a zooming operation to maintain an image plane at a given location as the latter tends to shift with the movement of the second group, the first to the third groups being sequentially disposed in the sequence named as viewed from an object side, and a relay lens system formed by a fourth group which is disposed on an image side of the variable magnification system and which remains stationary during a focussing and a zooming operation; the first group including a composite converging lens system, formed by a combination of a negative and a positive or a positive and a negative single lens, and a positive single lens, all disposed in the sequence named as viewed from the object side, the second group including a negative lens, formed by a positive and a negative lens joined together, and a negative single lens, all disposed in the sequence named as viewed from the object side, the third group including a positive lens formed by a negative and a positive lens joined together, and the fourth group including a pair of positive lenses having their surfaces of high curvature directed toward the object side, a negative lens having its surface of a high curvature directed toward the image side, a positive single lens, and a negative lens having its surface of high curvature directed toward the object side, all disposed in the sequence named as viewed from the object side toward the image side, and wherein the individual lenses satisfy the following requirements:

$$0.8 < \frac{f_1}{f_4} < 1.5 \qquad (1)$$

$$0.8 < \left|\frac{r_8}{r_9}\right| < 1.5 \qquad (2)$$

$$0.7 < \frac{r_{12}}{n_7 - n_8} \cdot \frac{1}{f_3} < 3 \qquad (3)$$

-continued

$$0.1 < \frac{r_{19}}{f_4} < 0.5 \qquad (4)$$

$$1 < \frac{r_{21}}{r_{22}} < 2 \qquad (5)$$

$$n_9 < 1.68,\ \gamma_9 > 50 \qquad (6)$$
$$n_{10} < 1.68,\ \gamma_{10} > 50$$

where f_i represents the composite focal length of an i-th group, r_i the radius of curvature of an i-th surface, d_i the axial thickness or air separation between an i-th and an (i+1)-th surface, n_i the refractive index of an i-th lens with respect to d-line of the spectrum and ν_i the Abbe's number of an i-th lens.

4,372,655
AUTOMATIC EYE-REFRACTOMETER

Isao Matsumura, Yokosuka; Yasuyuki Ishikawa, Kawaguchi; Shigeo Maruyama, Kawasaki; Reiji Hirano, and Yoshimi Kohayakawa, both of Yokohama, all of Japan, assignors to Canon Kabushiki Kaisha, Tokyo, Japan

Filed Sep. 13, 1979, Ser. No. 75,115
Claims priority, application Japan, Sep. 20, 1978, 53-115647
Int. Cl.[3] **A61B** *3/14, 3/10*
U.S. Cl. 351—206 **7 Claims**

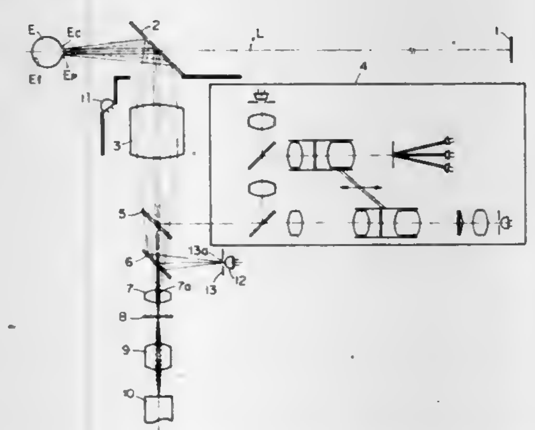

1. An apparatus for automatically measuring the refractive power of an eye, comprising:

a diopter measuring system for directing radiant energy to the fundus of an eye to be examined, detecting the focus of the radiant energy reflected upon the fundus of the eye and operating on the signal stream of focus detection;

means for converting said signal stream into a video signal which forms a character pattern;

a video camera for photographing the front part of the eye; and

a video display device electrically connected with said converting means and with said video camera for receiving said video signal and displaying said character pattern and for displaying the front part of the eye.

4,372,656
HIGH EFFICIENCY OPTICAL PROJECTOR FOR 3D MOTION PICTURES

Alvin M. Marks, 166-35 9th Ave., and Mortimer Marks, 166-25 Cryders La., both of Whitestone, N.Y. 11357

Filed May 15, 1981, Ser. No. 264,055
Int. Cl.[3] **G03B** *35/00*
U.S. Cl. 352—57 **9 Claims**

1. A motion picture projection system, comprising a light source, a first reflector, a surface on said first reflector, said surface being an ellipse of revolution with a first focus and a second focus, said focii being coincident with said axis of revolution, a light source located at said first focus, a first lens, said first lens having a first spherical surface with its center of curvature at said second focus, and a first aspheric surface; said second lens having a second spherical surface with its center of curvature also at said second focus, and a second aspheric surface, a first rectangular aperture plate, a multilayer sheet polarizer at Brewster's angle to said axis, at least one surface having a high index layer capable of polarizing light by reflection and transmission, said reflected polarized light rays and said transmitted polarized light rays being polarized with their planes of polarization at right angles, a second reflector, said second reflector redirecting said reflected polarized light rays parallel and contiguous to said transmitted polarized light rays, a conventional film strip having a succession of image areas, a standard second aperture for said images, each said image area having a black bar centered in said image area, right and left stereo images in areas on each side of said black bar within said second aperture, said transmitted polarized rays impinging on

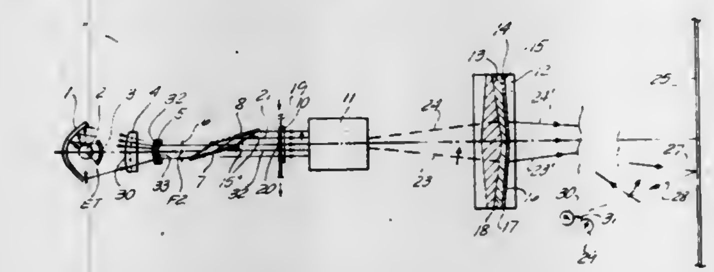

one of said stereo image areas, and said reflected polarized rays impinging on the other said stereo image area, a projection lens, a first prism and a second prism, a first polarizer and a second polarizer, said first polarizer and said first prism in combination, and said second polarizer and said second prism in combination, said combined polarizer-prisms bending and further polarizing said rays, a metallized reflecting screen for reflecting said stereo images as polarized rays reflecting the image rays from said screen, a polarized viewer comprising a frame, right eye and left eye aperture mountings on said frame, polarized filter sheets having horizontal and vertical planes of polarization mounted in said right eye and left eye apertures respectively whereby the right eye image is transmitted only by said right polarized filter sheet, and said left eye image is transmitted only by said left eye polarized filter sheet, and whereby the light efficiency of said system is at least doubled, compared to said projector system without said multilayer polarizers and said second reflector.

4,372,657
DEVICE FOR INDICATING PHOTOGRAPHIC EXPOSURE CONDITIONS

Hiroshi Iwata, Nara, and Tetsuo Yamaoka, Osaka, both of Japan, assignors to West Electric Co., Ltd., Osaka, Japan

Filed Jun. 10, 1981, Ser. No. 272,168
Claims priority, application Japan, Jun. 17, 1980, 55-82649
Int. Cl.[3] **G03B** *17/20, 7/26, 15/05, 13/02*
U.S. Cl. 354—53 **5 Claims**

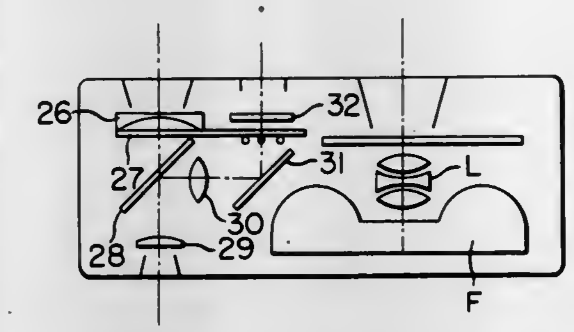

1. A view finder for a camera including means for providing a warning of unsatisfactory exposure conditions, comprising:

a window through which a subject may be viewed, said window comprising an electro-optical element having a transparent state and an opaque state, the state of said window being determined by an electrical control signal applied thereto;

means responsive to a plurality of exposure-affecting conditions of said camera for setting said electrical control signal at a first value when all of said conditions are satisfactory and at a second value when any one of said conditions is unsatisfactory; and

a driving circuit connected to said window and responsive to said electrical control signal for (i) rendering the entire window transparent when said electrical control signal has said first value, and (ii) rendering the entire window continuously or intermittently opaque to block the view of said subject when said electrical control signal has said second value.

4,372,658
PIPELINE INSPECTION APPARATUS

Donald T. O'Connor, Barrington Hills; Donald E. Lorenzi, Des Plaines; John J. Flaherty, Elk Grove Village, and Edward Schaefer, Bellwood, all of Ill., assignors to Magnaflux Corporation, Chicago, Ill.

Continuation of Ser. No. 155,512, Jun. 2, 1980, abandoned, which is a continuation-in-part of Ser. No. 881,148, Feb. 27, 1978, Pat. No. 4,249,810. This application Feb. 10, 1982, Ser. No. 347,541
Int. Cl.[3] **G03B** *37/00*
U.S. Cl. 354—63 **6 Claims**

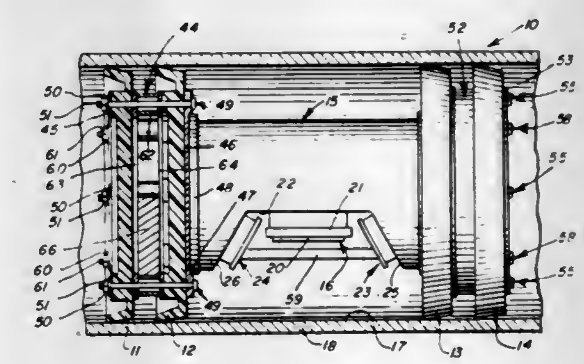

1. In pipe inspection apparatus, a device arranged to be moved down through a vertically extending pipe section and thence into a horizontal pipe section for longitudinal horizontal movement therewithin, said device comprising photographic camera means including means defining a rectangular image area, film storage and transport means arranged for feeding film through said image area and optical means for projecting an image to said image area, said optical means being arranged to project said image along a viewing axis from an internal surface area of the pipe with said viewing axis being normal to the axis of said pipe and with a generally rectangular image being produced in said image area which corresponds to a generally rectangular internal surface area of the pipe and which has length and width dimensions respectively corresponding to the axial length and arcuate width dimensions of said internal surface area, illumination means for illuminating said internal surface area of the pipe, operating means for operating said film storage and transport means and said illumination means during movement of said device along the pipe for recording on the film a plurality of images corresponding to axially spaced generally rectangular surface areas of the pipe, said illumination means being spaced axially from said viewing axis and being arranged to project light toward said internal surface area of the pipe in a direction at a substantially uniform acute angle to the axis of the pipe and with substantially uniform intensity, the relationship between the direction of the light and the surface of the pipe being substantially uniform throughout all of said internal surface area of the pipe such that shadows are produced across recesses in said internal surface area of the pipe and such that there is a substantially uniform relationship between the size of the images of said

shadows and the size of the corresponding recesses in said internal surface area, engagement means including at least two axially spaced cup members defining resilient annular flanges in engagement with axially spaced portions of the inside surface of the pipe, a central housing section supporting said camera and illumination means therewithin, a pair of cup member support structures secured to opposite ends of said central housing section for support of said central housing section from said cup members, said viewing axis being approximately mid-way between said cup member support structures, and weight means operative under the force of gravity to urge said device toward a certain angular position when moving longitudinally through a horizontal pipe section and to place said viewing axis at a predetermined angular position relative to the pipe.

4,372,659
APPARATUS FOR TAKING A CONTINUOUS PHOTOGRAPH OF THE EXTERIOR OF AN ARTICLE
Tadahiro Ogawa, Tokyo, Japan
Filed Jul. 20, 1981, Ser. No. 285,276
Int. Cl.³ G03B *29/00, 15/06*
U.S. Cl. 354—80 **5 Claims**

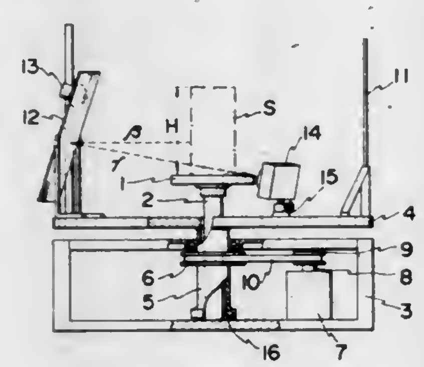

1. An apparatus for taking a single, continuous photograph of the exterior of an article comprising:
a central disk adapted for placement of said article thereupon;
an outer disk coaxial with said central disk, the positions of said central disk and said outer disk being rotatable relative to one another; and
a slit camera positioned on said outer disk for taking said photograph, said slit camera having an effective line of sight which is essentially perpendicular to the exterior of said article, said article and said camera thereby being rotatable relative to one another;
wherein the velocity and direction of the film fed behind the slit in said slit camera are porportional to the speed and direction of rotation of said object relative to said camera.

4,372,660
FILM UNIT CONTAINING PACK
Yoshio Hara, Minami-ashigara, and Tadayoshi Shibata, Kanagawa, both of Japan, assignors to Fuji Photo Film Co., Ltd., Kanagawa, Japan
Filed Apr. 28, 1981, Ser. No. 258,493
Claims priority, application Japan, Apr. 28, 1980, 55-56427
Int. Cl.³ G03B *17/26, 17/52*
U.S. Cl. 354—180 **3 Claims**

1. A film unit containing pack for holding a plurality of film units piled one on another for use with an instant camera in which each of said film units once exposed is fed between a pair of developing rollers including a master roller mounted on a fixed axis and a slave roller spring biased toward said master roller, each roller having an outside diameter in a range of substantially 6 to 12 mm, each of said film units having a processing solution holding container adapted to be burst by said developing roller means, and said camera and said pack being adapted such that processing solution contained in said container is spread over a predetermined image forming region of said film units while said film units is discharged out of said camera by said developing rollers with a discharging angle of 10° to 20° towards a front of said camera, the improvement comprising; said pack having a lower edge of an outlet through which said film unit is pulled out of said pack, said lower edge

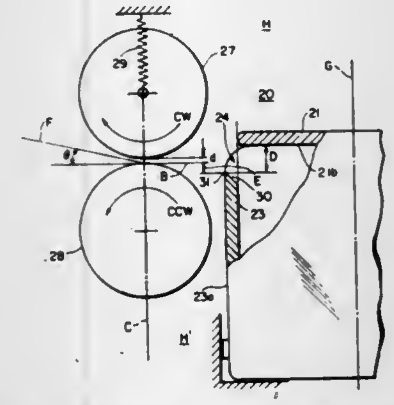

being located relative to the film unit opposite said image forming region thereon, formed to have a level difference in a range of −0.15 to +0.35 mm with respect to the level of an outer wall of said master roller which is closest to an outer wall of said slave roller, and said master roller located on the same side of said film unit as said lower edge.

4,372,661
TENSIONING AND RELEASING ASSEMBLY FOR A CAMERA SHUTTER
Karl-Heinz Lange, Bunde, Fed. Rep. of Germany, assignor to Balda-Werke Photographische Gerate und Kunststoff GmbH & Co., KG, Bunde, Fed. Rep. of Germany
Filed Aug. 31, 1981, Ser. No. 298,041
Claims priority, application Fed. Rep. of Germany, Sep. 2, 1980, 3032976
Int. Cl.³ G03B *9/64, 17/42*
U.S. Cl. 354—204 **11 Claims**

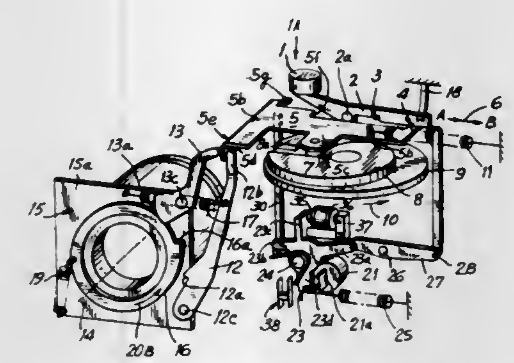

1. An assembly for tensioning a camera shutter in a camera having a lens and shutter assembly moveable along the axis of the camera lens, comprising:
shutter activation means including a tensioning slide mounted within the camera body for selective displacement in a first direction and an opposed second direction transverse to the axis of the lens;
tensioning means mounted within the camera body for tensioning the shutter in response to displacement of the activation means in a tensioning direction; and
locking means mounted within the camera body and operatively engaged to the shutter assembly for holding the shutter in a tensioned position and for releasing the shutter in response to displacement of the activation means in a direction opposite to the tensioning direction.

4,372,662
DIAPHRAGM SETTING DEVICE FOR PHOTOGRAPHIC CAMERA
Franz Starp, Mittlere Steige 36, and Dieter Rittmann, Calwerstrasse 53, both of 7547 Wildbad 5, Fed. Rep. of Germany
Filed Sep. 10, 1981, Ser. No. 300,970
Claims priority, application Fed. Rep. of Germany, Sep. 13, 1980, 3034630; Jan. 17, 1981, 3101388
Int. Cl.³ G03B *9/02*
U.S. Cl. 354—273 **21 Claims**

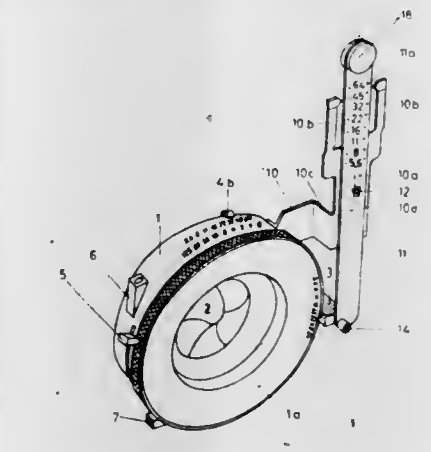

1. Diaphragm setting device arrangement for a photographic camera comprising a lens shutter housing having a displaceable diaphragm adjusting ring adapted for selectively adjusting the diaphragm of the shutter thereof in conjunction with a setting scale and a counterpart indicator mark, and a diaphragm setting device including an elongate carrier mounted on the outer periphery of the shutter housing and extending substantially tangentially relative to the shutter housing, and a setting slide slidably guided on and movable relative to the carrier and disposed in operational engagement with the diaphragm adjusting ring, the setting slide being slidably guided on the carrier by means of a pin and slot connection and having a slide end portion articulatedly connected directly to the diaphragm adjusting ring by means of an articulated connection.

4,372,663
REAR APERTURE CONVERTER
Fumio Oshima, Shiki, Japan, assignor to Asahi Kogaku Kogyo Kabushiki Kaisha, Tokyo, Japan
Filed Jul. 23, 1981, Ser. No. 285,917
Claims priority, application Japan, Jul. 31, 1980, 55-108650[U]
Int. Cl.³ G03B *17/14, 7/20;* **G02B** *7/02*
U.S. Cl. 354—286 **2 Claims**

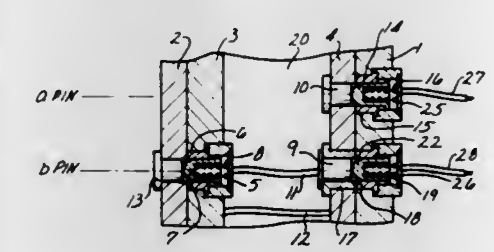

1. In a photographic camera having an interchangeable lens assembly with a lens mount and a camera body with a body mount engageable with the lens mount, a source of binary signals in the lens assembly having at least two bits representative of a lens characteristic, and means in the camera body for receiving the binary information, a rear aperture converter comprising:
a first mount engageable with the lens mount;
a second mount engageable with the body mount;
means for transmitting from the first mount to the second mount without change one bit of the binary information; and
means for transmitting from the first mount to the second mount the other bit of the binary information in inverted form.

4,372,664
MOISTURE- AND DUST-PROOF DEVICE FOR ROTATING OPERATION PART OF CAMERA
Masami Shimizu, Tokyo, Japan, assignor to Canon Kabushiki Kaisha, Tokyo, Japan
Filed Nov. 13, 1981, Ser. No. 321,206
Claims priority, application Japan, Nov. 19, 1980, 55-165502[U]
Int. Cl.³ G03B *17/02, 17/08*
U.S. Cl. 354—288 **3 Claims**

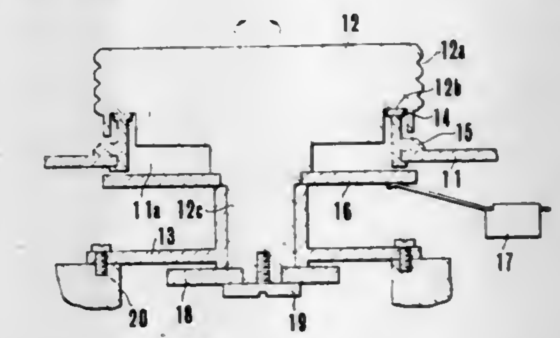

1. A moisture- and dust-proof device for a camera, comprising a ring-shaped visco-elastic member which has a receiving seat formed at one end thereof for receiving an operation member of said camera and which has another end secured to the periphery of an operation member inserting hole provided in the external wall of said camera, said one end of said ring-shaped member being disposed within a peripheral grooved part of said operation member; and a washer which is made of a resin material having a low coefficient of friction and is interposed between the inner side of the peripheral grooved part of said operation member and said receiving seat of said ring-shaped member.

4,372,665
AUTOMATIC VARIABLE-QUANTITY/FIXED-TIME ANTI-OXIDATION REPLENISHER CONTROL SYSTEM
Kenneth M. Kaufmann, Minneapolis, Minn., assignor to Pako Corporation, Minneapolis, Minn.
Filed Nov. 16, 1981, Ser. No. 321,392
Int. Cl.³ G03D *3/06;* **G05D** *11/00*
U.S. Cl. 354—298 **7 Claims**

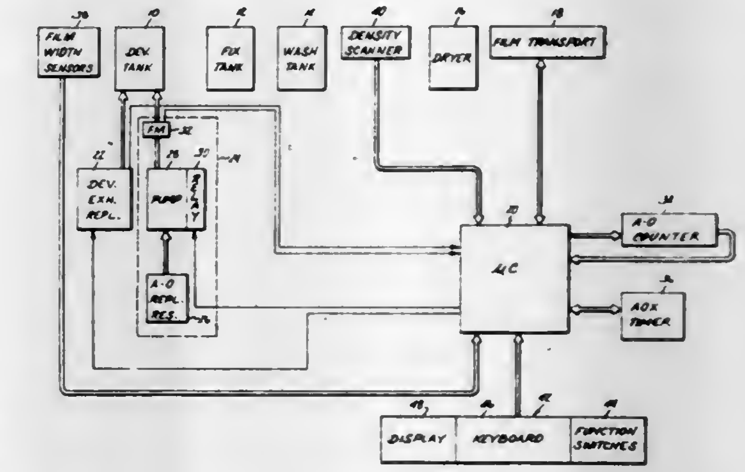

1. A method of providing replenishment to processor fluid in a processor photosensitive material, the method comprising:
(a) commencing a predetermined time interval;
(b) providing exhaustion replenishment during the time interval as a function of the use of processor fluid;

(c) providing a first replenishment signal indicative of (1) an accumulated amount of anti-oxidation replenishment supplied as a result of the exhaustion replenishment during the time interval and (2) an amount of excess anti-oxidation replenishment carried over from a preceding interval, if any;
(d) providing a second replenishment signal indicative of an amount of anti-oxidation replenishment required during the time interval as a function of a stored anti-oxidation replenishment rate;
(e) comparing the first and second replenishment signals at the end of the time interval;
(f) if the second replenishment signal is greater than the first replenishment signal, providing anti-oxidation replenishment in an amount which is a function of a difference between the first replenishment signal and the second replenishment signal;
(g) if the first replenishment signal is greater than the second replenishment signal, providing no anti-oxidation replenishment and determining the amount of excess anti-oxidation replenishment to be carried over to a subsequent interval based upon an amount by which the first replenishment signal exceeds the second replenishment signal;
(h) commencing a subsequent time interval in which steps (b)–(h) are repeated.

4,372,666
AUTOMATIC VARIABLE-QUANTITY/VARIABLE-TIME ANTI-OXIDATION REPLENISHER CONTROL SYSTEM
Kenneth M. Kaufmann, Minneapolis, Minn., assignor to Pako Corporation, Minneapolis, Minn.
Filed Nov. 16, 1981, Ser. No. 321,394
Int. Cl.³ G03D *3/06;* **G05D** *11/00*
U.S. Cl. 354—298 **4 Claims**

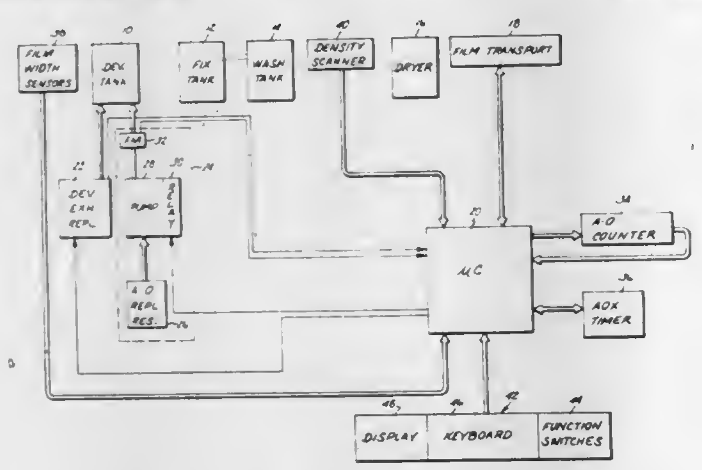

1. A control system for controlling anti-oxidation replenisher means to provide anti-oxidation replenisher to a processor of photosensitive material, the control system comprising:
means for measuring a time interval and providing a clock signal at the end of the interval;
means for storing an exhaustion replenishment rate;
means for storing an anti-oxidation replenishment rate;
means for providing exhaustion replenishment during the time interval as a function of the use of processor fluid and the exhaustion replenishment rate;
means for providing a first signal indicative of an accumulated amount of anti-oxidation replenishment supplied as a result of the exhaustion replenishment during the time interval;
means for providing a second signal indicative of the amount of anti-oxidation replenishment required during the time interval as a function of expired time and the stored anti-oxidation replenishment rate;
means responsive to the clock signal for comparing the first signal and the second signal at the end of the time interval;
means for providing an amount of anti-oxidation replenishment at the end of the interval, if the second signal exceeds the first signal, in an amount which is a function of the amount by which the second signal exceeds the first signal;
means for extending a subsequent time interval, if the first signal exceeds the second signal, by an amount of time which is a function of the amount by which the first signal exceeds the second signal.

4,372,667
MANUAL ADDITIVE LAMPHOUSE FOR AERIAL IMAGES OF CAPTION STANDS AND OPTICAL PRINTERS
Claude Cattelani, 1, Square de la Mayenne, F-75017 Paris, France
Filed Apr. 14, 1981, Ser. No. 254,207
Claims priority, application France, Jan. 8, 1981, 81 00198
Int. Cl.³ G03B *27/00, 27/32, 27/52*
U.S. Cl. 355—1 **12 Claims**

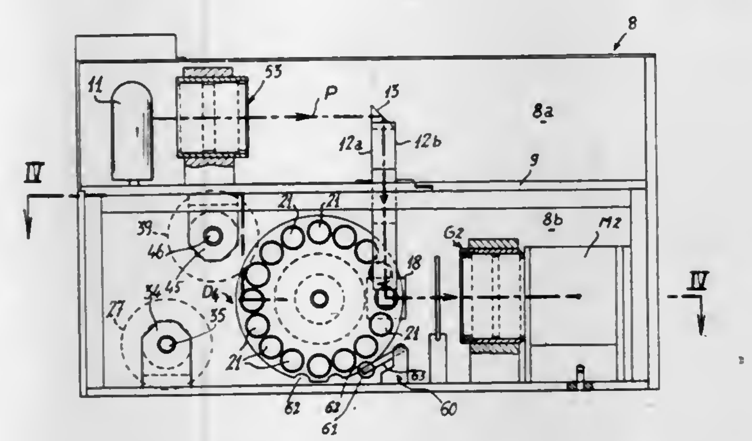

1. A manual additive lamphouse for aerial images of caption stands and optical printers, comprising a white-light source and a suitable optical system, wherein said lamphouse comprises an optical fiber means which is capable of guiding the white-light beam from the source into the optical system, said system being provided with means for selecting the three primary colors, namely red, blue and green, from the white light transmitted by the optical fiber means, and means for separately dosing each color at the exit of the lamphouse.

4,372,668
SHEET REGISTRATION ACTUATION
Michael A. Malachowski, Webster; Victor Shur, Henrietta, and Raghulinga R. Thettu, Webster, all of N.Y., assignors to Xerox Corporation, Stamford, Conn.
Filed Dec. 24, 1980, Ser. No. 219,804
Int. Cl.³ G03G *15/00, 15/28*
U.S. Cl. 355—3 R **10 Claims**

1. Reproducing apparatus comprising a stationary optical system, a platen to support a document to be reproduced, means to transport said platen carrying a document to be reproduced across said stationary optical system, a copy sheet feeding apparatus and a copy sheet registration apparatus to feed a copy sheet in synchronism with the transport of a document by said moving platen, said platen having associated therewith mechanical means to actuate said copy sheet registration apparatus and means associated with said copy sheet registration apparatus responsive to said platen actuating

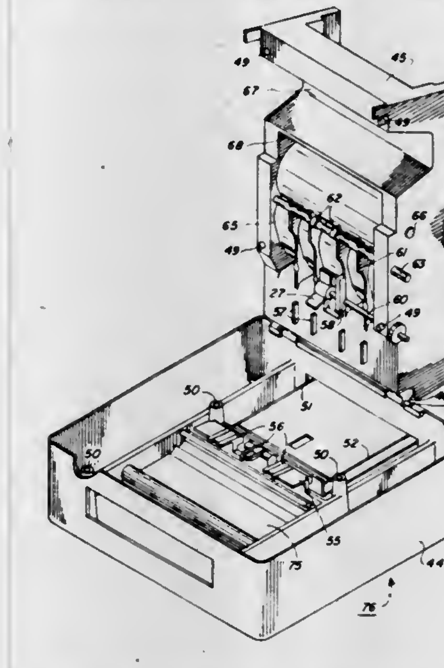

means to directly actuate said copy sheet registration apparatus.

4,372,669
ELECTROPHOTOGRAPHIC PRINTING MACHINE
Joseph Fantuzzo, Webster, and Henry R. Till, Rochester, both of N.Y., assignors to Xerox Corporation, Stamford, Conn.
Filed Jun. 29, 1981, Ser. No. 278,538
Int. Cl.³ G03G *15/00*
U.S. Cl. 355—3 R **10 Claims**

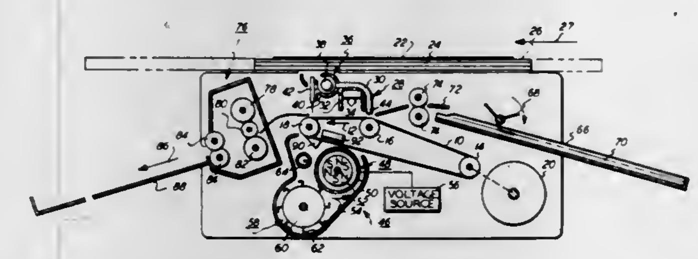

1. An electrophotographic printing machine for reproducing an original document on a copy sheet, including:
a photoconductive belt arranged to move in a recirculating path;
a combined charging-transferring unit arranged to charge at least a portion of said photoconductive belt to a substantially uniform level during movement of said photoconductive belt through a first cycle;
a combined exposing-discharging unit arranged to focus a light image of the original document onto the charged portion of said photoconductive belt to selectively discharge the charged portion of said photoconductive belt recording an electrostatic latent image of the original document thereon during the movement of said photoconductive belt through the first cycle;
a combined developing-cleaning unit arranged to transport developer material comprising carrier granules having toner particles adhering triboelectrically thereto into contact with the electrostatic latent image so that the toner particles are attracted thereto to form a toner powder image thereon during the movement of said photoconductive belt through the first cycle;
means for positioning the copy sheet adjacent the toner powder image, said combined charging-transferring unit being arranged to transfer the toner powder image to the copy sheet during movement of said photoconductive belt through a second cycle, said combined developing-cleaning unit being arranged to remove residual toner particles from said photoconductive belt after transfer of the toner powder image to the copy sheet during movement of said photoconductive belt through the second cycle, and said combined exposing-discharging unit being arranged to illuminate said photoconductive belt to eliminate the charge thereon after removing the residual toner particles therefrom during the movement of said photoconductive belt through the second cycle;
means, disposed interiorly of said photoconductive belt, for illuminating said photoconductive belt during the second cycle, said illuminating means being positioned after said combined charging-transferring unit and before said developing-cleaning unit in the direction of movement of said photoconductive belt; and
means for disturbing the residual toner particles adhering to said photoconductive belt during the second cycle, said disturbing means being positioned after said combined charging-transferring unit and before said illuminating means in the direction of movement of said photoconductive belt.

4,372,670
PRECESSION SCANNING SYSTEM
Vance J. Carpenter, Fairport, and Abbott Smith, Webster, both of N.Y., assignors to Xerox Corporation, Stamford, Conn.
Filed Feb. 23, 1981, Ser. No. 237,032
Int. Cl.³ G03B *27/48;* **G03G** *15/00*
U.S. Cl. 355—8 **8 Claims**

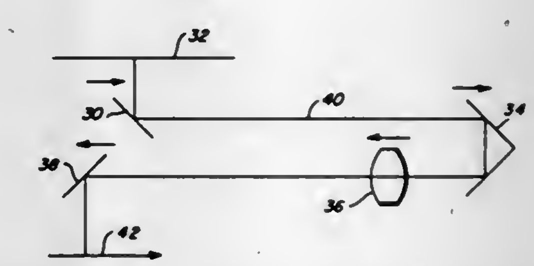

1. An optical system for scanning a stationary object at an object plane and projecting through a lens, light images of said object along an optical path onto a flat portion of a moving photoreceptor in an image plane, said system comprising:
scanning illumination means for scanning said object, said scan illumination means adapted to decrease the distance between the object plane and the projection lens during each scan cycle, and
projection means, including said projection lens, positioned between said scanning illumination means and said photoreceptor, said projection means adapted for translation along said optical path so as to compensate for said decreased component of object plane-to-lens distance by projecting said light images onto the photoreceptor in a direction opposite to said photoreceptor motion.

4,372,671
SHOCK ABSORBING CARRIAGE DRIVE COUPLING FOR COPIER/DUPLICATORS
Edward J. Berdinner, Jr., Longmont, Colo., assignor to International Business Machines Corporation, Armonk, N.Y.
Filed Apr. 6, 1981, Ser. No. 251,414
Int. Cl.³ G03G *15/00*
U.S. Cl. 355—8 **8 Claims**

1. In a copier having a mechanical power source and a carriage mounted for reciprocal motion including movement in at least a scanning direction and a return direction, an improved means for interconnecting said power source and said carriage comprising:
means operable during said scanning direction carriage

movement for establishing a relatively rigid coupling between said power source and said carriage; and

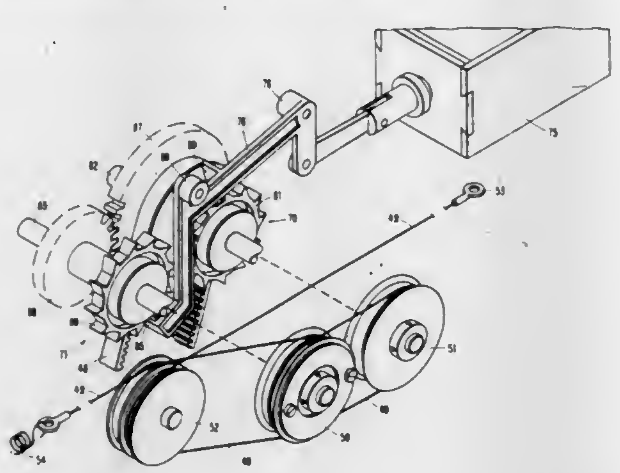

means operable during said return direction carriage movement for establishing a force absorbing, resilient coupling between said power source and said carriage.

4,372,672

SELF-TRIGGERING QUALITY CONTROL SENSOR

Robert W. Pries, Longmont, Colo., assignor to International Business Machines Corporation, Armonk, N.Y.

Filed Dec. 22, 1980, Ser. No. 219,122

Int. Cl.³ G03G *15/00*

U.S. Cl. 355—14 R **4 Claims**

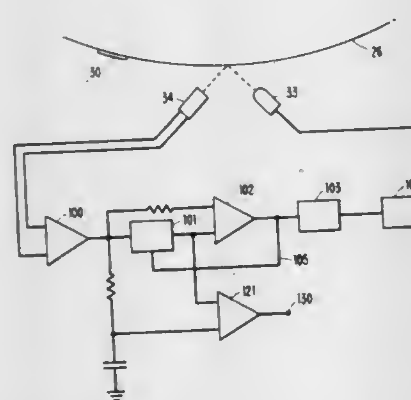

1. A process for indicating changes in light reflectivity of adjacent surface areas on a moving web using a device having a light source positioned for illuminating said areas and a light sensitive element positioned for receiving light originated from said source but reflected from said surface areas with said element producing a sense signal corresponding in magnitude to said received light, said process comprising the steps of:

coupling a signal storage device to said element sense signal continuously while said element sense signal is in a reference condition;

detecting a substantial magnitude change of said element sense signal when the sense signal enters a sample condition;

responding to said detecting step by isolating said storage device and by changing the magnitude of the sample signal to approximately equal said reference signal if a correct quality condition is present;

comparing the magnitude of the adjusted sample signal with the stored reference signal; and

producing an output indication in response to failure of said adjusted sample signal and said reference signal to compare approximately equally in said comparing step.

4,372,673

IMAGE FORMING APPARATUS

Masahiro Tomosada; Yoshimasa Kimura, both of Kawasaki, and Hisashi Sakamaki, Yokohama, all of Japan, assignors to Canon Kabushiki Kaisha, Tokyo, Japan

Division of Ser. No. 42,235, May 24, 1979, Pat. No. 4,264,188. This application Mar. 12, 1981, Ser. No. 242,721

Claims priority, application Japan, May 31, 1978, 53-65924; May 31, 1978, 53-65925; May 31, 1978, 53-65926; May 31, 1978, 53-65927; May 31, 1978, 53-65928

Int. Cl.³ G03G *15/00*

U.S. Cl. 355—14 R **4 Claims**

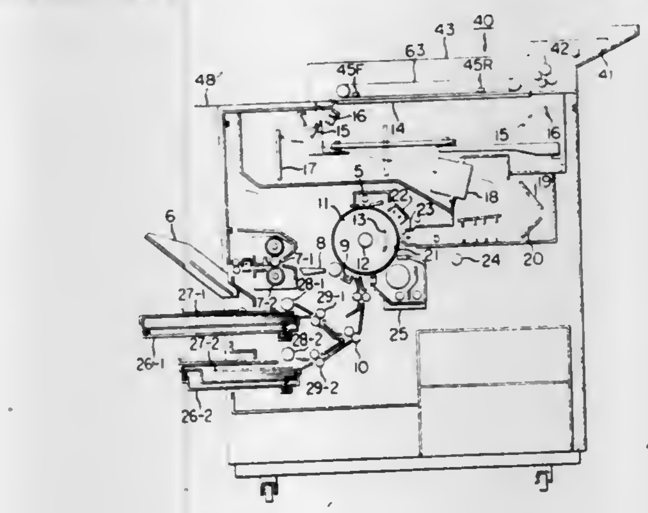

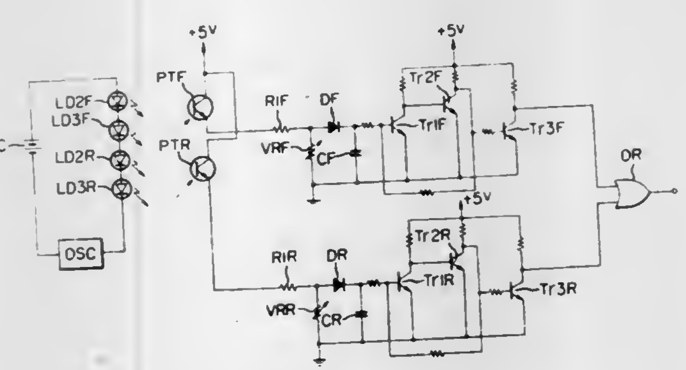

1. An image forming apparatus, comprising:

means for forming a copy image of an original document on a copy material, said means including movable means for scanning the original document;

means for feeding the original document to a predetermined position for copying;

means for starting said scanning means;

means for feeding the copy material for copying, wherein said copy material feeding means starts its operation after the start of said original document feeding means, but before operation of said starting means;

means for detecting jamming of the original document; and

means for controlling said means for forming a copy image in response to an output from said detecting means.

4,372,674

COPYING MACHINE HAVING DETECTORS FOR THE BACKGROUND COLOR AND DENSITY OF THE ORIGINAL

Koji Yukawa; Masayuki Miyazaki, and Takashi Murahashi, all of Hachioji, Japan, assignors to Konishiroku Photo Industry Co., Ltd., Tokyo, Japan

Filed Oct. 27, 1980, Ser. No. 200,977

Claims priority, application Japan, Oct. 29, 1979, 54-140262; Nov. 7, 1979, 54-143949

Int. Cl.³ G03G *15/00*

U.S. Cl. 355—14 D **2 Claims**

1. In a copying machine for reproducing an original to be

copied having an image and a background area thereon, and including means for projecting light on the original to be copied, and first detecting means for receiving light reflected from the background portion of the original and for producing a signal in accordance with the density of the light reflected from the background portion of the original, the improvement comprising second detecting means for receiving light reflected from the background portion of the original and for

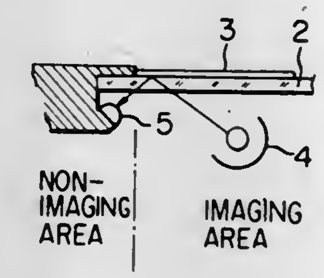

producing a signal in accordance with the wavelength of the light reflected from the background portion of the original, and level discriminating means for receiving the signals produced by said first and second detecting means and for controlling reproduction of the original in accordance with the wavelength and the density of the light reflected from the background portion of the original as represented by said signals of the first and second detecting means.

4,372,675

VARIABLE POWER FUSER CONTROL

Ravi B. Sahay, Penfield, N.Y., assignor to Xerox Corporation, Stamford, Conn.

Filed Nov. 28, 1980, Ser. No. 210,903

Int. Cl.³ G03G *15/00, 15/20*

U.S. Cl. 355—14 FU **11 Claims**

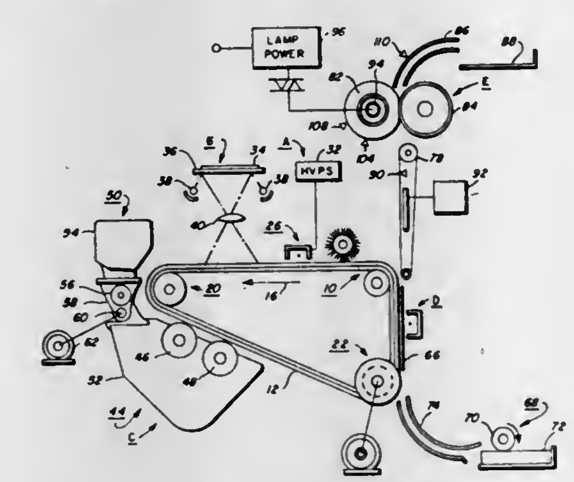

4. The method of operating a reproduction machine having a fuser for fixing images produced on copies and having other operating components including the steps of

determining the power available to the reproduction machine,

providing a first power level to operate said other operating components,

providing a residue power level, the residue power level being the difference in power between the available power and the power to operate the other operating components, to operate the fuser;

operating the other operating components and the fuser until the fuser temperature drops below a first temperature level,

inhibiting operations of the other operating components upon detecting the fuser below said first temperature level,

providing the first power level and residue power level to the fuser to raise the fuser temperature to a second level above said first level,

resuming operation of the other operating components to produce copies upon the fuser temperature reaching the second level.

4,372,676

ELECTROPHOTOGRAPHIC COPYING MACHINE

Shin Miyata; Tateomi Kono, both of Toyokawa; Kenji Shibazaki, Aichi, and Yoichi Utsunomiya, Tondabayashi, all of Japan, assignors to Minolta Camera Co., Ltd., Higashi Osaka, Japan

Filed Mar. 16, 1981, Ser. No. 243,715

Claims priority, application Japan, Mar. 19, 1980, 55/35450

Int. Cl.³ G03G *15/00*

U.S. Cl. 355—14 C **28 Claims**

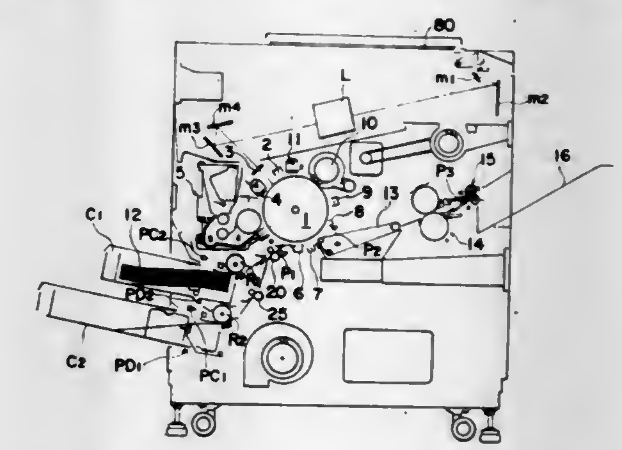

16. In an electrophotographic copying machine of a transfer type which comprises an electrophotographic member supported for movement, a support for the support of an original to be copied thereon, means for forming an image on the electrophotographic member in correspondence to the image of the original, means for designating one of a plurality of image forming conditions, and control means operatively associated with the image forming means and the designating means for generating a control signal during a mode of operation based on the image forming condition designated by said designating means, the improvement which comprises a first group of timers utilizable in common to all of modes of operation, means for determining the particular mode of operation on the basis of an output signal generated from the designating means, a second group of timers having their preset times determined in correspondence to the mode of operation determined by the determining means, and a processing means for starting the timers of the first and second groups in a predetermined order for generating a control signal necessary to control the operation of the image forming means incident to the lapse of the preset timers of the times of the first and second groups.

4,372,677

PRECISION PLANAR POSITIONING DEVICE

Ellwood J. Horner, Armonk, N.Y., assignor to American Hoechst Corporation, Somerville, N.Y.

Filed Nov. 23, 1981, Ser. No. 323,791

Int. Cl.³ G03B *27/52, 27/04*

U.S. Cl. 355—41 **6 Claims**

1. A device for precision planar positioning which comprises:

(a) a generally planar frame; and

(b) a cursor; and

(c) means for translating said cursor across the face of said planar frame and fixing said cursor at any of a plurality of positions; and

(d) a planar indicator strip removably fixed along each of two adjacent perpendicular edges of said frame, each strip bearing at least one facial indicia having a substantially different optical density from said strip; and

(e) at least one optical interruptor means, cooperating with said translating means, capable of differentiating between

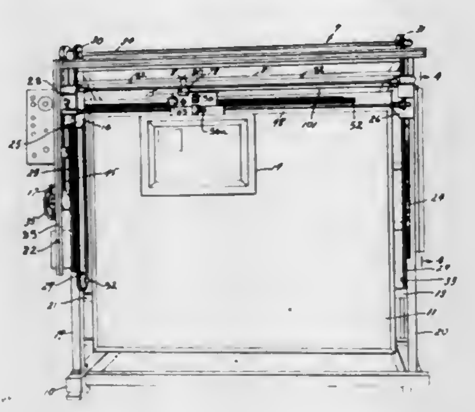

the optical density of said strips and said indicia and having means for indicating a difference in optical density between said strips and said indicia.

4,372,678
LIGHT-MIXING SYSTEM
John B. Ikin, Leigh-on-Sea, England, and Denis M. Neale, deceased, late of Brentwood, England (by Adeline I. Neale, executrix), assignors to Ciba-Geigy AG, Basel, Switzerland
Filed Mar. 5, 1981, Ser. No. 241,143
Claims priority, application United Kingdom, Mar. 12, 1980, 8008365
Int. Cl.³ G03B *27/72, 27/76*
U.S. Cl. 355—37 **5 Claims**

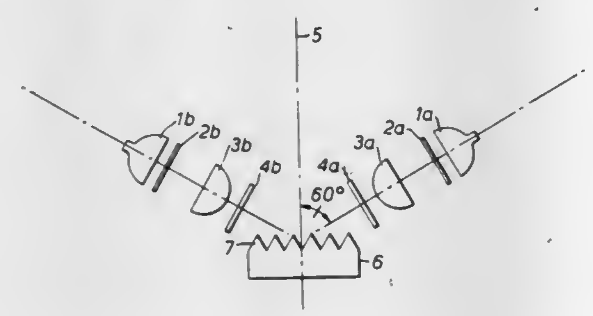

1. An illumination system for a photographic copying apparatus for mixing light from two light sources, which illumination system comprises disposed along a longitudinal axis a solid light-mixing member of an optically clear material which has as a light-input face a generally planar sulcated face having grooves therein of equilateral triangular cross-section and a substantially smooth light-output face, said two light sources being diametrically opposed relative to the longitudinal axis and each being adapted to direct light on to said light-mixing member from an angle substantially 60° relative to said longitudinal axis, the general plane of said sulcated face of the light-mixing member being disposed normal to the said longitudinal axis and the grooves therein having smooth polished surfaces and extending normal to a plane containing both light sources and the longitudinal axis, light from the two sources passing through the light-mixing member to emerge therefrom substantially along the longitudinal axis.

4,372,679
IMAGE ILLUMINATION COMPENSATION METHOD AND APPARATUS
Harold J. Weber, Sherborn, Mass., assignor to Coulter Systems Corp., Bedford, Mass.
Filed Mar. 3, 1981, Ser. No. 240,201
Int. Cl.³ G03B *27/54*
U.S. Cl. 355—70 **21 Claims**

1. Illumination control compensation method, in which an object plane is scanned by effectively moving a source of modulated light along the longitudinal axis of the object plane whereby a part of the light reflected from the object plane is received by imaging optics and projected upon an image plane; said control providing modulation for the said source of light to be effectively less intense when juxtaposed relative to that portion of the object plane which is substantially on-axis with the said optics, and increasingly more effectively intense when

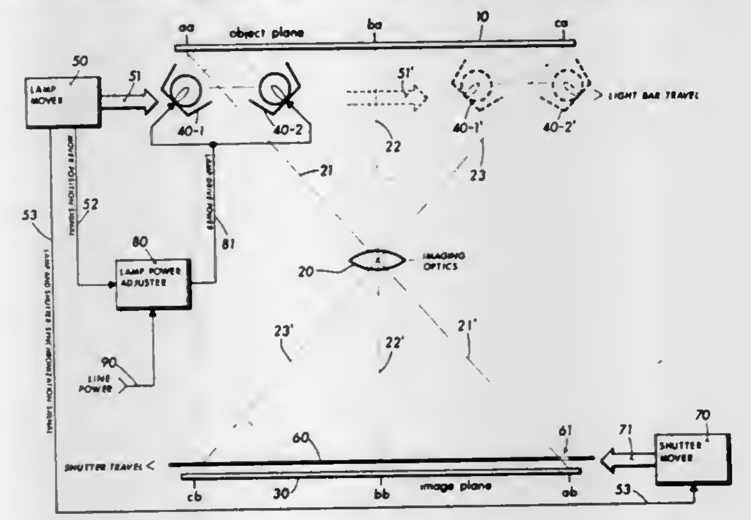

alternatively positioned so as to produce an increase in off-axis angle between the said object plane and the imaging optics; the improved effect providing compensation for the fall-off of light ray coupling efficiency of the off-axis rays relative to the on-axis rays impinging on the optics and thereby producing substantially uniform illumination at the image plane, at least in the direction of effective light source travel.

4,372,680
MINIATURE SPECTRALLY SELECTIVE DOSIMETER
Richard R. Adams, Newport News; Ian O. MacConochie, Yorktown, and Bordie D. Poole, Jr., Seaford, all of Va., assignors to The United States of America as represented by the Administrator of the National Aeronautics and Space Administration, Washington, D.C.
Filed Oct. 8, 1980, Ser. No. 195,223
Int. Cl.³ G01V *1/48*
U.S. Cl. 356—51 **8 Claims**

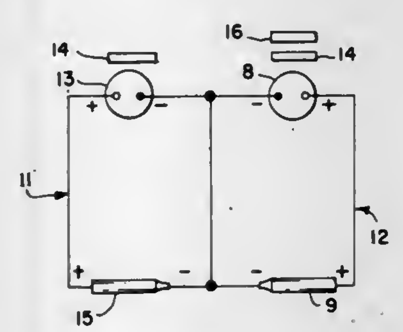

1. A spectrally selected radiation measuring device for measuring the amount of radiation on a mobile surface comprising:
detector means for detecting radiation;
filter means located between the radiation measuring source and said detector means for allowing only selected wavelength bands to be detected by said detector means;
electrochemical integrator means for integrating the output of said detector means;
means for packaging said detector means, integrating means, and filter means compactly;
means for attaching packaged means so that said detector means remains at all times in close proximity and substantially parallel to the mobile surface being measured;
readout means for reading out electrochemical integrator data and wherein said readout means comprises means for constantly discharging said electrochemical integrator; and
means for indicating when said electrochemical integrator is completely discharged, whereby the time taken to discharge the electrochemical integrator is indicative of the amount of radiation integrated.

4,372,681
STREAMLINED LABEL VERIFICATION TECHNIQUE
M. Douglas Sallenbach, Costa Mesa, Calif., assignor to Avery International Corp., San Marino, Calif.
Filed Aug. 18, 1980, Ser. No. 178,729
Int. Cl.³ B65C *3/08, 9/08*
U.S. Cl. 356—72 **16 Claims**

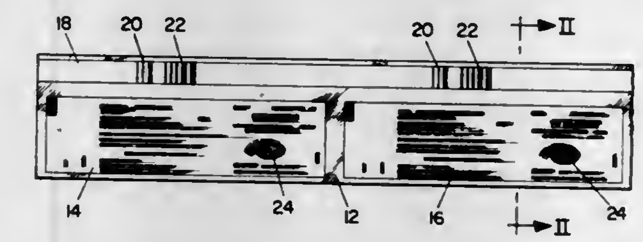

1. A method for verifying the accuracy of labels to be applied to containers containing drugs or other products requiring special handling comprising the steps of:
preparing a backing tape with individual pressure sensitive labels mounted across one portion of the width of said backing tape, and a continuous strip of label stock material mounted on another portion of the width of said backing tape;
printing the label including identification of the product;
printing a machine readable identification of the product on the continuous strip, adjacent the label;
checking the machine readable identification on said continuous strip as said labels are being applied to the containers; and
rewinding the continuous strip along with the backing tape following the checking step and the application of labels to the containers.

4,372,682
MEDICAL TEST STRIP HOLDING DEVICE
Klaus Nenninger, Mannheim, and Rainer Van Rijckevorsel, Brühl, both of Fed. Rep. of Germany, assignors to Clinicon Mannheim GmbH, Mannheim, Fed. Rep. of Germany
Filed Mar. 18, 1981, Ser. No. 244,988
Claims priority, application Fed. Rep. of Germany, Mar. 22, 1980, 3011223; Apr. 26, 1980, 3016198
Int. Cl.³ G01N *21/13*
U.S. Cl. 356—244 **12 Claims**

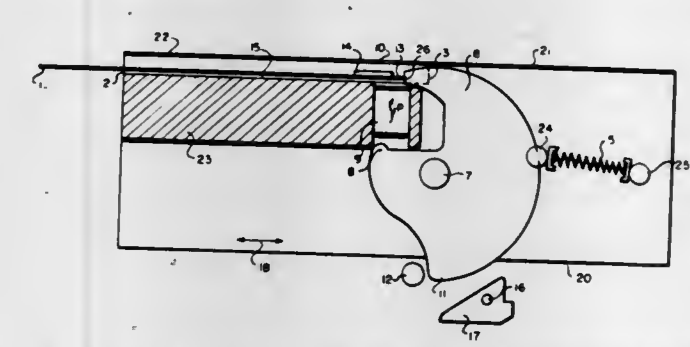

1. A device for positioning and firmly holding a medical test strip, said device comprising: a housing having a strip reception opening, means forming a stop at the inner end of the opening for the inserted end of the test strip and a window positioned to be opposite a predetermined test zone of the test strip when inserted into the reception opening and abutting against the stop; means for pressing substantially at right-angles on the rear side of the test-strip strip towards said window, the pressing means being movable between a rest position wherein it is spaced from the rear side of the inserted test strip and a pressing position in which it presses the test strip against the window; and means responsive to the insertion of a test strip for moving the pressing means from the rest to the pressing position and for applying a pressing force which is substantially uniform in the positions corresponding to various thicknesses of insertable test strips.

4,372,683
PHOTOMETER WITH ROTATING SAMPLE CONTAINER
James C. Sternberg, Fullerton, Calif., assignor to Beckman Instruments, Inc., Fullerton, Calif.
Continuation of Ser. No. 71,813, Sep. 4, 1979, abandoned. This application Sep. 9, 1981, Ser. No. 300,419
Int. Cl.³ G01N *21/47, 21/84*
U.S. Cl. 356—338 **3 Claims**

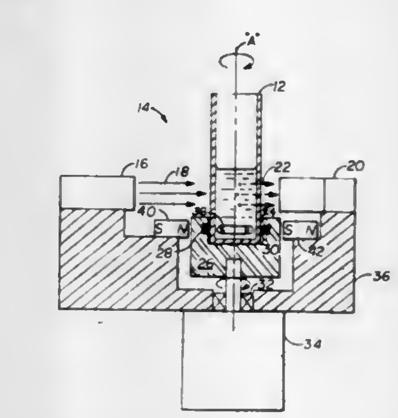

1. In photometric analysis apparatus of the type having an optical measuring station at which a sample container holds sample material to be optically measured, the sample container including a plurality of window areas in a wall thereof for passing light into or out of the container during a measurement interval along one or more optical axes intersecting the measuring station, and optical detection means on one such axis for viewing the measuring station and operative during a measurement interval to monitor light exiting a window area of the container to develop an optical measurement of the sample within the container, the improvement characterized by:
means for rotatably supporting the sample container at the measuring station; and
means for rotating the container during a measurement interval to cause the window areas thereof to rotate past the detection means at a rotational speed sufficient to cause the detection means to effectively integrate the light exiting the container through all window areas of the container thus viewed, thereby compensating for optical variations or imperfections in individual window areas of the sample container.

4,372,684
HOLOGRAPHIC APPARATUS TO MEASURE THE SURFACE FIGURE OF A NONLINEAR AXICON AND OTHER OPTICAL ELEMENTS
Bruce J. Bartholomew, Poway, Calif., assignor to General Dynamics Corporation/Convair Div., San Diego, Calif.
Filed May 13, 1981, Ser. No. 263,286
Int. Cl.³ G01B *9/021*
U.S. Cl. 356—348 **10 Claims**

10. A method for testing an entire nonlinear surface by holographic interferometry comprising,
providing a source of spatially coherent light,
directing said spatially coherent light first onto the surface to be measured,
directing a beam of temporally coherent scattered light reflected from said surface onto a holographic medium,
forming a reference beam and directing said beam to said holographic medium, and

rotating said surface to form an interferogram between the rotated surface image and the unrotated image recon-

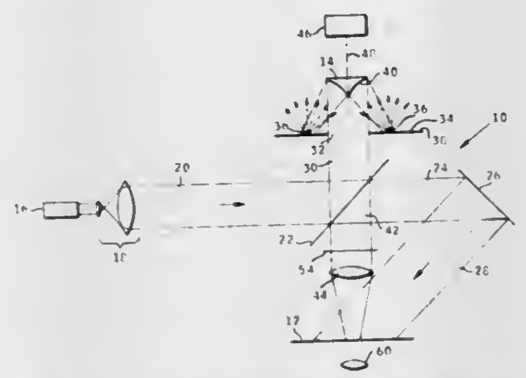

structed by the hologram which indicates errors in the surface figure of said surface.

4,372,685
METHOD AND ARRANGEMENT FOR THE MEASUREMENT OF ROTATIONS

Reinhard Ulrich, Leonberg, Fed. Rep. of Germany, assignor to Max-Planck-Gesellschaft zur Forderung der Wissenschaften e.V., Fed. Rep. of Germany

Filed Jan. 14, 1980, Ser. No. 111,853

Claims priority, application Fed. Rep. of Germany, Jan. 15, 1979, 2901388; Feb. 22, 1979, 2906870

Int. Cl.³ G01B *9/02*

U.S. Cl. 356—350 **20 Claims**

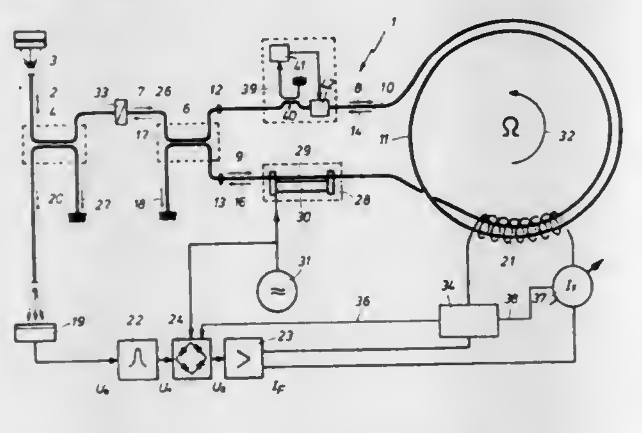

8. An apparatus for the measurement of rotations by the Sagnac effect in a light path which encircles an area and which is rotating at a rate to be measured, comprising:

a beamsplitter including means for splitting an input light flux into two coherent light beams and respectively coupling said beams into both ends of said light path to traverse said light path in opposite directions, to thereby produce a phase difference of 2Δ between said beams and which further includes means for recombining said light beams after they have traversed said light path to form first and second output light fluxes, and means for directing said first output light flux back towards the source of said input light flux;

a photoelectric detector coupled to receive said first output flux to measure the intensity thereof;

a phase modulator which modulates the phase of said two coherent light beams;

a phase-sensitive rectifier coupled to receive an output signal of said detector for producing an electrical error signal whose magnitude and sign are proportional to sin (2Δ);

an automatic control loop coupled to receive said error signal from said rectifier, said loop maintaining with high accuracy said phase difference 2Δ equal to an integer multiple of 2π; and

a combination of a monomode waveguide and a polarizer provided between said beamsplitter and a branching device which separates said first output light flux going to said detector from the path of the input light flux, said combination being traversed in opposite directions by said input light flux and by said first output light flux which is used for the detection.

4,372,686
DOUBLE-CONE ROTATING MIXER

Friedrich W. Herfeld, Wall 1, 5982 Neuenrade, Fed. Rep. of Germany

Filed May 20, 1981, Ser. No. 265,372

Int. Cl.³ B01F *9/02*

U.S. Cl. 366—220 **6 Claims**

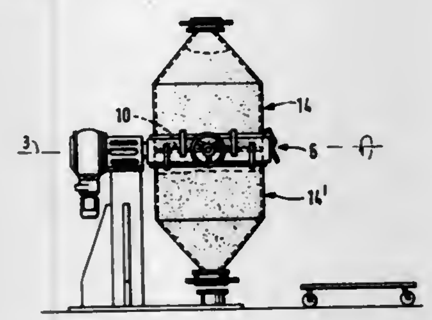

1. Double-cone rotating mixer, the double cone mixing container of which is rotatable about a horizontal rotational axis, aligned at a right angle to the container axis, characterized by the following features:

(a) the mixer spindle (3′) carries a ring (6);
(b) the ring (6) possesses on its front faces two ring clamping areas (7,7′) with clamping devices (8,8′);
(c) a closing valve (10), adapted to the inner cross-section of the ring, is pivotable about a swivelling axis (9);
(d) two half containers (14,14′) each comprising a contact surface (18), suited for one of the ring clamping areas (7,7′), as well as a conical bottom part (16).

4,372,687
INSTANTANEOUS CALENDER DEVICE WITH SPRING AND TAPPET MOUNTED ON ROTARY SHIFTER

Boris P. Krasovsky, ulitsa Shkolnaya, 12, kv. 54, Krasnogorsk Moskovskoi oblasti; Vladimir V. Melnik, ulitsa Junykh Lenintsev, 79, korpus 1, kv. 54, and Daniel D. Malkin, ulitsa Junykh Lenintsev, 95/13, korpus 1, kv. 31, both of Moscow, all of U.S.S.R.

PCT No. PCT/SU79/00036, § 371 Date Feb. 23, 1980, § 102(e) Date Feb. 22, 1980, PCT Pub. No. WO80/00197, PCT Pub. Date Feb. 7, 1980

PCT Filed Jun. 15, 1979, Ser. No. 195,198

Claims priority, application U.S.S.R., Jun. 23, 1978, 2633720

Int. Cl.³ G04B *19/24*

U.S. Cl. 368—28 **1 Claim**

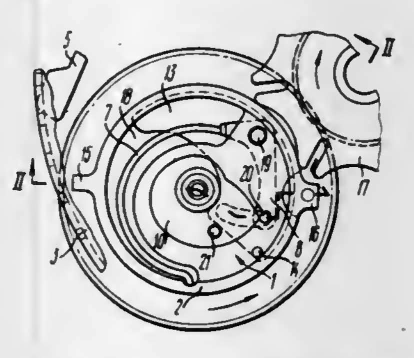

1. An improved instantaneous calendar device comprising a date ring; a day disk with a star wheel; a rotary shifter with pins interacting with said date ring and said star wheel of said day disk to rotate said date ring and said day disk at appropriate intervals; stops retaining said date ring and said star wheel of said day disk in position after being rotated by said pins of said rotary shifter; and an actuator including a spring, a tappet, a calendar wheel and a cam having an abrupt slope, said rotary shifter being connected to said calendar wheel for rotation by said calendar wheel, said spring and said tappet being mounted on said rotary shifter and said cam being mounted on a stationary portion of said calendar device, and means for coiling said spring as said rotary shifter rotates and said spring being uncoiled when said tappet contacts the abrupt slope of said cam to cause sharp rotation of the rotary shifter and interaction of the pins of the rotary shifter with the date ring and the star wheel of the day disk.

4,372,688
LIQUID OPERATED CLOCK

Victor H. Chatten, 1567 W. 215th St., Torrance, Calif. 90501

Continuation-in-part of Ser. No. 343,414, Jan. 28, 1982. This application Feb. 22, 1982, Ser. No. 351,326

Int. Cl.³ G04B *1/26*

U.S. Cl. 368—65 **6 Claims**

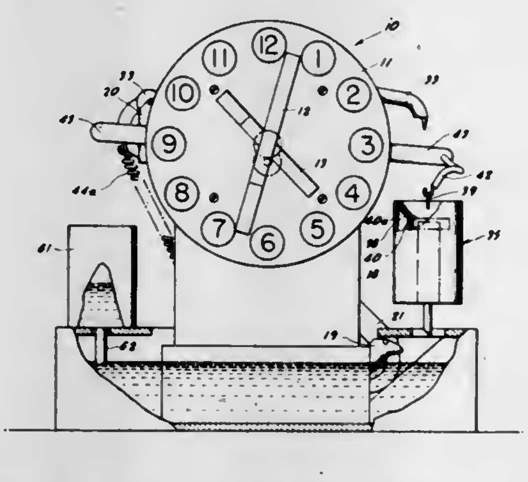

1. In a liquid operated clock, the combination of: a liquid reservoir, means for transferring predetermined amounts of liquid from said reservoir to an elevated receptacle at regular time intervals, a receiver positioned to receive liquid gravitating from said receptacle, a movable member, means for suspending said receiver from said movable member, resilient means acting on said movable member to counterbalance the weight of said receiver and its liquid contents, means connected to said receiver to cause it to empty suddenly upon receiving a series of said predetermined amounts of liquid and thereby to cause movement of said movable member by said resilient means, a clock mechanism driven from an input shaft, and ratchet means driven in response to said movement of said movable member for turning said input shaft intermittently.

4,372,689
ELECTRONIC WATCH MOVEMENT

Grandjean Remy, Fontainemelon, Switzerland, assignor to Ebauches, S.A., Switzerland

Filed Oct. 24, 1980, Ser. No. 200,325

Claims priority, application Switzerland, Oct. 25, 1979, 9580/79

Int. Cl.³ G04C *15/00;* G04B *1/00*

U.S. Cl. 368—155 **6 Claims**

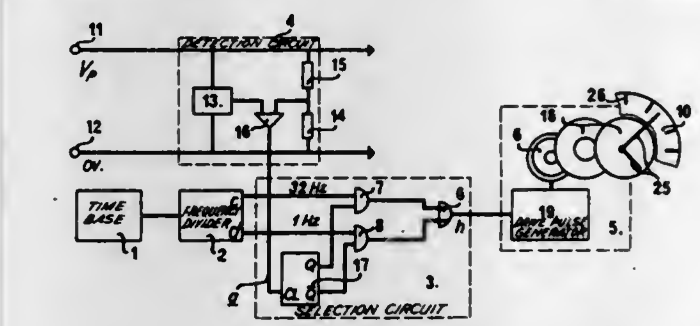

1. An electronic watch movement comprising a time base circuit, a frequency divider circuit supplied by the time base, an actuating circuit connected to said divider circuit, a display system actuated by said actuating circuit, voltage input terminals adapted to be connected to an internal voltage source or to a external voltage source thereby to supply said circuits, said external voltage being different from said internal voltage a detecting circuit connected to the voltage input terminals for generating a logic signal in response to said external voltage and a selection circuit responsive to said logic signal for producing at least one test signal applied to said actuating circuit.

4,372,690
THERMAL RADIATION MEASURING ARRANGEMENT

Herbert L. Berman, and James C. Sprout, both of Los Altos, Calif., assignors to Linear Corporation, Inglewood, Calif.

Filed Mar. 6, 1981, Ser. No. 241,467

Int. Cl.³ G01F *5/10*

U.S. Cl. 374—29 **14 Claims**

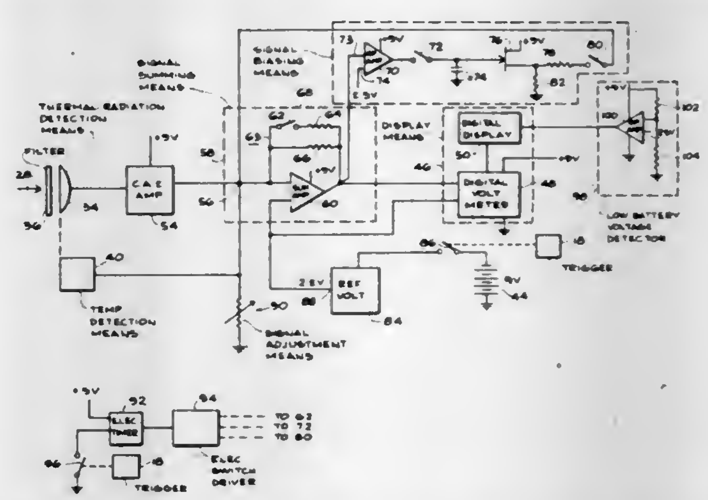

1. A thermal radiation measuring arrangement for measuring the rate of thermal radiation emitted from a surface in a first operating condition and for measuring the rate of thermal radiation heat exchange between two surfaces in a second operating condition, and comprising, in combination:

thermal radiation detection means for receiving thermal radiation and generating a first output signal having a magnitude proportional to said thermal radiation;

temperature detection means for detecting the temperature in regions adjacent said thermal radiation detection means and generating a second output signal having a magnitude proportional to said detected temperature;

signal summing means for receiving said first output signal and said second output signal and generating a third output signal in response thereto, and said third output signal having a magnitude proportional to said sum of said first output signal and said second output signal in a first operating condition;

signal biasing means selectively connectable to said signal summing means for generating a fourth output signal having a first magnitude sufficient to cause said third output signal to be zero for said thermal radiation detection means receiving thermal radiation from a first surface, and said signal biasing means, including control means for maintaining said fourth output signal at said first magnitude thereof for said thermal radiation detection means receiving thermal radiation from a second surface, having a temperature different from said first surface;

switch means for selectively connecting said signal biasing means to said signal summing means in a second operating condition and disconnecting said signal biasing means from said signal summing means in said first operating condition;

whereby, said third output signal has a magnitude proportional to the rate of thermal radiation received by said thermal detection means in said first operating condition, and said third output signal has a magnitude proportional to the rate of radiation heat transfer between said first

surface and said second surface in said second operating condition.

4,372,691
METHOD AND APPARATUS FOR DETERMINING THE THERMAL RESISTANCE OF A STRUCTURE SUCH AS A WALL CEILING OR THE LIKE
Robert E. Buckley, Norwalk, Conn., assignor to Barnes Engineering Company, Stamford, Conn.
Filed Feb. 5, 1981, Ser. No. 231,664
Int. Cl.^{3} G01N *25/18*
U.S. Cl. 374—44 **7 Claims**

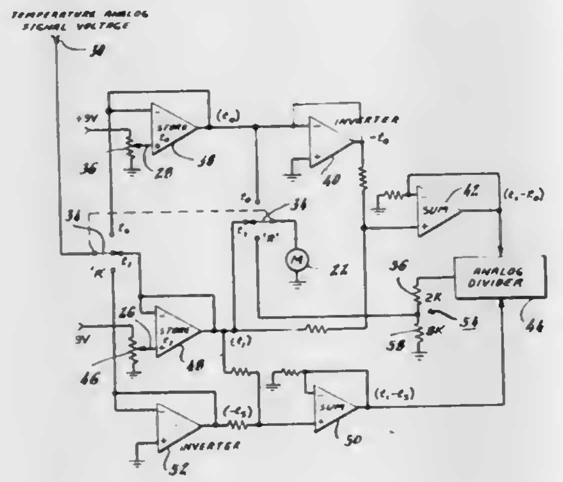

1. An 'R' value meter for providing a direct reading, noncontact measurement of the thermal resistance of a structure such as a wall, ceiling or the like after the inside room temperature and the outside temperature are applied thereto comprising:
first storage means for storing the inside room temperature signal applied thereto,
second storage means for storing the outside temperature signal applied,
first means for combining the outputs of said first and second storage means to provide a first difference signal,
second means for combining a signal representing the inside surface temperature of the structure whose 'R' value is desired to be determined, and the output of said first storage means to provide a second difference signal,
divider means for dividing said first difference signal by said second difference signal,
a meter, and
means for coupling a portion of the output of said divider means to said meter for providing a direct 'R' value reading which is indicative of the thermal resistance of the structure being measured.

4,372,692
ELECTRONIC DEVICE TO RECORD TEMPERATURES AND THE TIME OF OCCURRENCE
Irving H. Thomae, Norwich, Vt., assignor to Trustees of Dartmouth College, Hanover, N.H.
Continuation of Ser. No. 75,953, Sep. 17, 1979, Pat. No. 4,286,465. This application Jun. 4, 1981, Ser. No. 270,618
The portion of the term of this patent subsequent to Sep. 1, 1998, has been disclaimed.
Int. Cl.^{3} G01K *7/00*
U.S. Cl. 374—104 **8 Claims**

1. A digital min-max thermometer that comprises: temperature transducer means for periodically sensing the temperature in the surrounding environment and for providing a signal representative of that temperature; means to provide the corresponding time of occurrence of the temperature thus sensed storage means for storing previously attained minimum and maximum values of temperature and the times of occurrence of each extreme; means for comparing the most recent sensed temperature with stored values of temperature for an interval of time in order to find the minimum and maximum temperatures, and their times of occurrence, attained during that interval; means for displaying the extreme temperatures for said interval together with the times of occurrence of each such extreme; means to perform periodically an extrapolation of

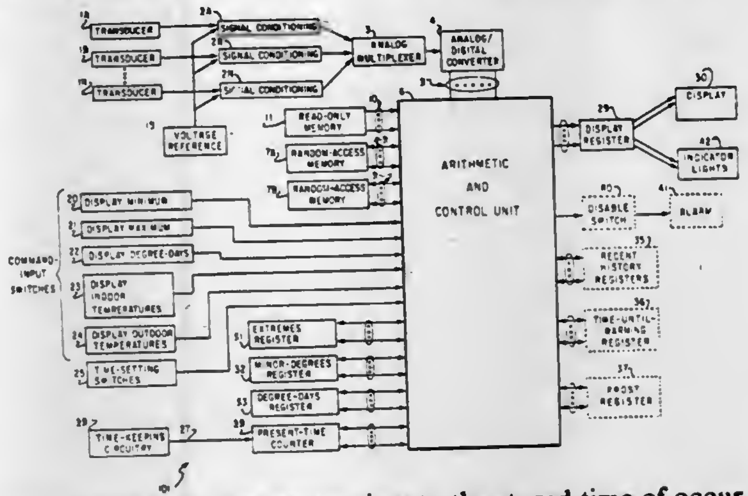

temperature from the present time to the stored time of occurrence of either the maximum or minimum temperature for the preceding interval, in order to estimate the highest or lowest temperature likely to be attained in the present interval.

4,372,693
TEMPERATURE EXCURSION SENSING AND LOCATING APPARATUS
Michael A. Lutz, San Carlos, Calif., assignor to Raychem Corporation, Menlo Park, Calif.
Filed Jan. 30, 1981, Ser. No. 229,913
Int. Cl.^{3} G01K *7/00;* **G08B** *17/00*
U.S. Cl. 374—111 **8 Claims**

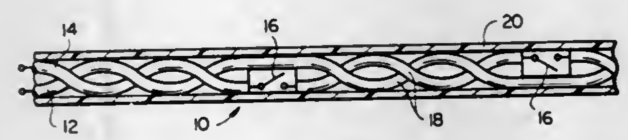

1. Temperature excursion sensing and locating apparatus, comprising:
a first electrical conductor;
a second electrical conductor comprising a plurality of serially connected, normally conductive, thermostatic devices for detecting temperature conditions, each of the thermostatic devices opening and thus becoming nonconductive upon detection of a predetermined temperature excursion; and
a dielectric member disposed between first and second electrical conductors, said first and second electrical conductors and dielectric member having an original capacitance value while the thermostatic devices are conductive and a reduced capacitance value upon detection of the predetermined temperature excursion by a thermostatic device said conductors connectable to a capacitance measuring device which compares the original and reduced capacitance values to determine the presence of a predetermined temperature excursion and the ratio of said capacitance values determining its location.

4,372,694
ELECTRONIC POCKET CALCULATOR
Michele Bovio, Brosso, and Filippo Demonte, Cavaller Maggiore, both of Italy, assignors to Ing. C. Olivetti & Co., S.p.A., Ivrea, Italy
Filed Jan. 7, 1981, Ser. No. 223,166
Claims priority, application Italy, Jan. 18, 1980, 67067 A/80
Int. Cl.^{3} B41J *3/36*
U.S. Cl. 400—88 **12 Claims**

1. A printing electronic calculator for printing amounts on a

recording medium from a roll comprising a parallelepipedal case, including an internal housing for housing the roll, a printing unit for printing on the recording medium which unwinds from the roll, and a platen for supporting the recording medium in front of the printing unit, wherein the calculator comprises a base and a top cover having an opening with an edge adjacent to the platen and the printing unit for the passage of the recording medium to the external of the case, a movable cover guided slidably by the base and the top cover and having an edge cooperative with said opening, wherein said cover is movable between an inoperative position and a working posi-

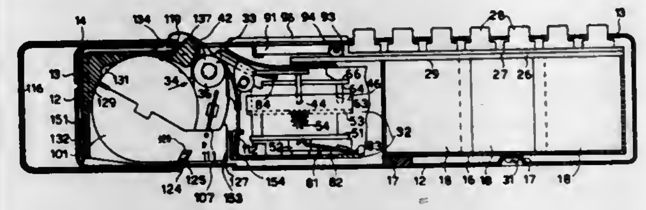

tion, wherein the edge of the movable cover in the inoperative position of the cover registers with the edge of said opening to protect the printing unit and prevent the passage of the recording medium to the external of the case and wherein said movable cover in its operative position uncovers the opening and allows the passage of the recording medium to the external of the case and wherein means are provided to prevent actuation of the printing unit by the calculating unit when the movable cover is in the inoperative position and to enable the calculating unit for printing on the recording medium from the roll when the movable cover is in the operative position.

4,372,695
PRINTING APPARATUS
William L. Ross, Barnsgate, Herons Ghyll, Nr. Uckfield, Sussex, England
Continuation-in-part of Ser. No. 65,378, Aug. 9, 1979, abandoned, which is a continuation of Ser. No. 915,503, Jun. 14, 1978, abandoned. This application Jul. 10, 1980, Ser. No. 168,377
Claims priority, application United Kingdom, Jun. 16, 1977, 25281/77
Int. Cl.^{3} B41J *3/10, 3/16, 27/16*
U.S. Cl. 400—119 **5 Claims**

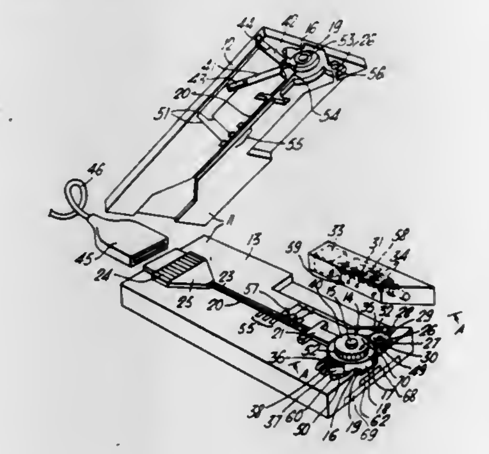

1. In a printer of the type in which print is formed on a drum by an electrostatic process and is transferred therefrom onto a print receiving surface of a print medium by means solely of pressure acting between the print medium and the drum, an improved head comprising in combination:
housing means;
a print drum supported for rotation about an axis in said housing means, said print drum having a cylindrical surface formed by a uniform dielectric layer on a conductive cylindrical form, and said housing means incorporating a printing station at which the print is transferred to said print medium;
means for connecting said conductive form to a first potential source;
an image forming means positioned in said housing means adjacent said drum and at a position spaced circumferentially with respect to the printing station, said image forming means comprising an array of electrodes each for connection to a respective pulse source means and each extending into direct physical contact with the dielectric layer on the periphery of the drum, said array extending over the width of the drum;
means for detecting the angular displacement of the drum due to rotation thereof in the housing;
means connected to said respective pulse source means and to said means for detecting the angular displacement of the drum for selectively enabling the pulse source means whereby the electrodes are pulsed in a prescribed sequence with a voltage signal derived from a second potential source in response to the angular displacement of the drum so as to form a charge image of one or more preselected characters on said dielectric surface;
inking means positioned in said housing means adjacent the said drum and between the image forming means and the printing station, said inking means including means for supplying ink and means for applying said ink to the drum after said charge image has been formed and before the charge image has reached the printing station as a result of rotation of the drum whereby print corresponding to one or more characters is formed by ink adhering to the charged areas on the dielectric surface of the drum, said ink applying means comprising at least one electrode means for connection to a third potential source which is spaced from said drum and is arranged so that the electrostatic field which is formed as each charge image passes the electrode means causes transfer of ink from the ink applying means to the areas on the drum on which the charge defining the charge image is confined;
the electrode means of the ink applying means comprising a cylindrical roller arranged for rotation in said housing on an axis parallel to the axis of rotation of said drum and means for rotating the roller when the said drum rotates at a rate proportional thereto, said roller being of considerably smaller diameter than the drum and being spaced therefrom at such a distance that the surface of the drum and the facing surface of the roller closely approach one another only along the plane containing the two axes of rotation;
the ink for use by the ink supplying means being a dry particulate material comprising appropriate pigments and magnetizable material all carried in a pressure fusible resin base and said inking roller having an outer surface formed by a sleeve of electrically conductive rubber wherein magnetic particles are entrained, said sleeve being premagnetized across the length of the roller in discrete spaced apart bands around the periphery thereof; and
a hopper means for containing a supply of ink and having an ink feed outlet, electromagnetic ink feeding means consisting of a series of coils arranged along a duct which extends from the hopper ink feed outlet through the housing means to the said roller and means for sequentially energising said coils so as to effectively pull the particulate material along the duct from the hopper to the roller.

4,372,696
HIGH QUALITY PRINTER
Frederick M. Pou, Dayton, Ohio, assignor to Monarch Marking Systems, Inc., Dayton, Ohio
Filed May 20, 1980, Ser. No. 151,577
Int. Cl.^{3} B41J *3/12*
U.S. Cl. 400—124 **45 Claims**

1. A matrix printer suitable for printing characters on a sheet stock medium, comprising:
means including a printing head having a plurality of printing

units arranged in an array for making imprints at desired locations defining the character being printed;
means coupled to said printing head for transporting said printing head with respect to said sheet stock medium in a first direction with respect to the direction of said array;
means coupled to said transporting means for determining the position of said printing head along said first direction with respect to said sheet stock medium;
means coupled to said printing head and responsive to said

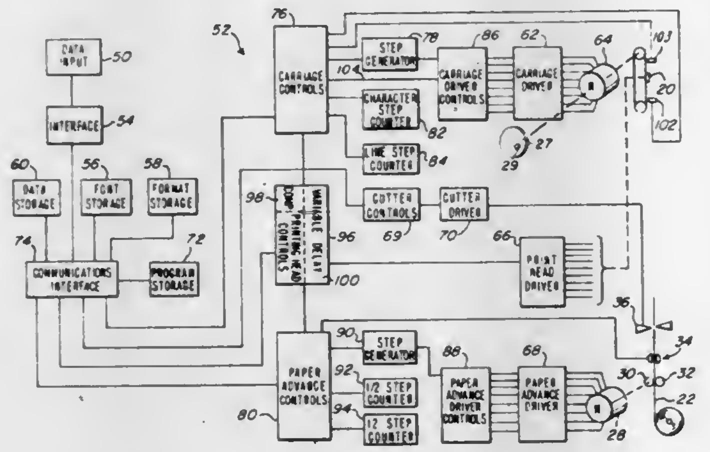

position determining means for activating predetermined ones of said printing units to generate imprints on said sheet stock medium at predetermined delay times after said printing head reaches predetermined positions along said first direction with respect to said sheet stock medium, said predetermined delay times being different for the various printing units and variable as a function of the predetermined positions along said first direction relative to the desired locations of the imprints defining the character being printed.

4,372,697

RIBBON DRIVE ARRANGEMENT FOR A PRINTER

David H. Babcock, Lexington, Ky., assignor to International Business Machines Corporation, Armonk, N.Y.

Filed Jun. 22, 1981, Ser. No. 276,285

Int. Cl.³ B41J *33/14*

U.S. Cl. 400—232 **15 Claims**

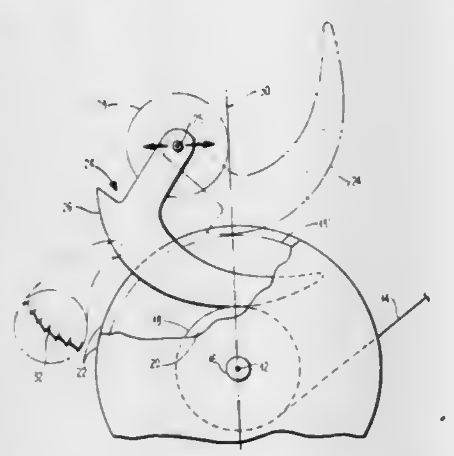

1. Tape drive apparatus for advancing a tape from a supply, said tape drive apparatus comprising:
a tape reel mounted for rotation about a reel axis, said reel defining a wrap plane for tape accumulation as a cylinder of overlaid convolutions having an outer circumference;
an elongate drive blade, mounted to move generally in said wrap plane, and having a drive edge that is asymmetrically textured to have a higher tendency to slip in a first longitudinal direction than in the opposite longitudinal direction;
means for urging said drive edge against said outer circumference of said tape cylinder;
means for oscillating said drive blade whereby said drive edge imparts increments of motion to said tape reel in the direction corresponding to the lower tendency for drive edge slippage.

4,372,698

DRIVING DEVICE FOR A PRINT HEAD OF A PRINTER

Akira Matsushima, 1-1, Taihei 4-chome, Sumida-ku, Tokyo, Japan

Filed Mar. 9, 1981, Ser. No. 241,537

Claims priority, application Japan, Mar. 11, 1980, 55-30668; Nov. 13, 1980, 55-159948

Int. Cl.³ B41J *19/20, 25/30*

U.S. Cl. 400—320 **2 Claims**

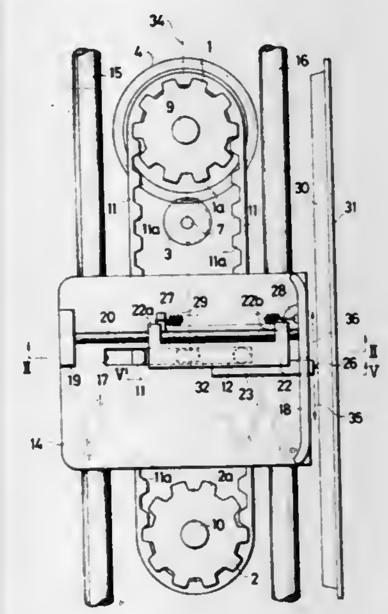

1. A driving device for a print head of a printer having an elongated platen comprising:
a pair of rotatable belt wheels disposed in spaced relationship along a line extending generally parallel to the platen;
an endless belt entrained around said belt wheels;
drive means for rotationally driving at least one of said belt wheels in one direction;
a drive pin secured to said belt and projecting upwards;
a carriage slidably movable in parallel to the platen, said carriage being provided with an elongated hole extending at approximately a right angle with respect to the platen and slidably receiving therein said drive pin;
a print head having a support member slidably supported on said carriage at approximately a right angle with respect to the platen;
a coil spring for biasing said support member toward the platen; and
shift means for moving said support member away from the platen against the force of said coil spring as said drive pin moves away from the platen, the shift means comprising a projection extending downwards from said support member into said elongated hole such that said projection is pushed backwards by said drive pin against the force of said coil spring when said drive pin moves away from the platen.

4,372,699

SHEET FEEDER FOR TYPEWRITERS

Paul A. Quinn, Jr., Lexington, Ky., assignor to International Business Machines Corporation, Armonk, N.Y.

Continuation of Ser. No. 85,826, Oct. 17, 1979, abandoned. This application Jul. 15, 1981, Ser. No. 283,694

Int. Cl.³ B41J *11/58, 13/10;* **B65H** *5/22*

U.S. Cl. 400—625 **3 Claims**

1. A sheet paper feed apparatus for a typewriter for feeding individual sheets of paper to the platen of the typewriter, said typewriter including platen drive means for feeding paper

around the platen and into a position for typing thereon; said apparatus comprising:
a rectangular tray including a rear paper support portion and a spaced apart forward paper support portion for supporting thereon the opposite ends of a stack of paper;
a shingler wheel intermediate said support portions, and projecting above a plane lying through said support portions to engage the lowermost sheet of said stack of paper and to support the center of the stack of paper to form a concave bow therein so that only the opposite ends of said stack of paper are supported by said support portions; a motor drive means connected to said shingler wheel to effect reversable rotation thereto, said motor responsive to a first command for effecting rotation of said shingler wheel in a first direction to slide the lowermost sheet of paper of said stack of paper towards said rear support portion until said forward support portion no longer supports said lowermost sheet;
first sensing means mounted on the tray for sensing separa-

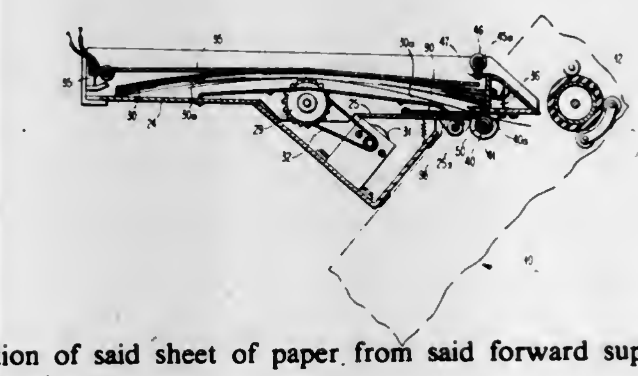

tion of said sheet of paper from said forward support portion;
paper sheet camming means beneath said forward support portion to aid in downward deflection of said lowermost sheet, and circuit means responsive to the sensing means sensing such separation for effecting motor drive means direction reversal and thus reversal of the direction of rotation of said shingler wheel to thereby urge said lowermost sheet in a second direction under said forward support portion toward said platen;
a first sheet drive roll adjacent said camming means for grasping said lowermost sheet and means for effecting rotation of said first sheet drive roll for directing said lowermost sheet of paper towards the platen of said typewriter, and a second sheet drive roll superimposed of said first sheet drive roll, and means for effecting rotation of said second sheet drive roll in synchronism with rotation of said first sheet drive roll and said platen to advance sheets of paper received from the platen of the typewriter to a position superimposed of said stack of paper.

4,372,700

SUCTION PUMP RESERVOIR BRUSH

Merritt L. Moffitt, Jr., 9 Weirwood Rd., Radnor, Pa. 19087

Filed Jun. 24, 1981, Ser. No. 276,847

Int. Cl.³ A46B *11/04*

U.S. Cl. 401—157 **3 Claims**

1. A suction pump reservoir brush apparatus, comprising:
bristle means for brushing soil from surfaces;
a support head for holding said bristle means, said head having a passageway therethrough connected to open at said bristle means;
a cylindrically-shaped chamber connected to said passageway and a portion of said support head away from said bristle means;
a cap enclosing the free end of said chamber away from said support head;
an actuating rod extending through said cap;
a disk-shaped piston including a peripheral skirt canted in sealing engagement with said chamber and on the end of said rod within said chamber, having a hole therethrough and a mounting head attached to said rod end having a first portion with air passageways against which said piston seats during a priming stroke, a second portion about which said piston is positioned and a third portion against which said piston seats during a vacuum stroke;
said piston having an initial inoperative position at said cap end of said chamber;
a small vent hole through the wall of said chamber near the inactive position of said piston and on the support head side thereof;

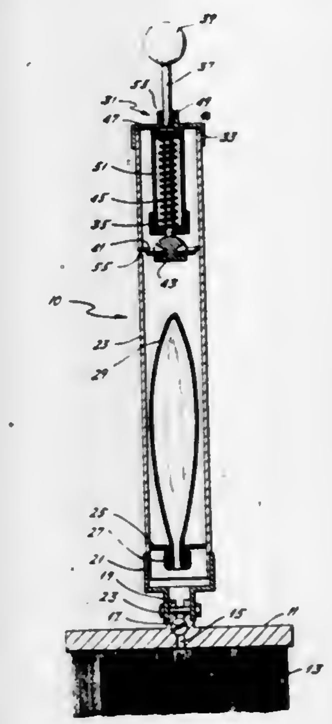

a flow regulating screw valve extending through said support head passageway;
a partition across said chamber at said support head end, said partition having an opening therethrough;
a mounting surface connected to said partition extending about said opening forming a collar extending about said partition opening and toward said passageway; and
a balloon-like membrane connected to said collar.

4,372,701

FIXING STRUCTURE

Takeshi Watanabe, Tokyo, Japan, assignor to Nissan Motor Company, Limited, Kanagawa, Japan

Filed Jul. 25, 1980, Ser. No. 172,264

Claims priority, application Japan, Jul. 26, 1979, 54-103921[U]

Int. Cl.³ F16B *35/04*

U.S. Cl. 403—24 **6 Claims**

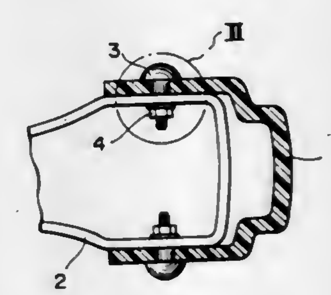

1. A structure for fixing a bumper and a support member together, comprising:
(a) a bolt having a head, a first stem portion of substantially circular cross section, a second stem portion of a non-circular cross-section smaller than that of the first stem portion, and a threaded portion, connected in this order;
(b) a portion of the bumper in which is formed a slot through which is passed the first stem portion, thereby alleviating

longitudinal stress in the bumper due to thermal deformation;
(c) a portion of the support member in which is formed a hole of substantially the same size and shape as the second stem portion and through which the second stem portion is passed;
(d) a nut screwed onto the threaded portion of the bolt so as to hold the bumper between the head of the bolt and the support member, and in a fashion that the bolt is unable to turn with respect to the support member; and
(e) the support member being held between a shoulder formed in the bolt between the first and second stem portions and the nut.

4,372,702
PISTON AND ROD ASSEMBLY FOR SLIDING IN A CYLINDER
Gerard L. Devaud, Paris, France, assignor to Societe d'Applications des Machines Motrices, Issy-les-Moulineaux, France
Filed Jan. 21, 1981, Ser. No. 227,112
Claims priority, application France, Jan. 25, 1980, 80 01590
Int. Cl.[3] F16D *1/06*
U.S. Cl. 403—24 **4 Claims**

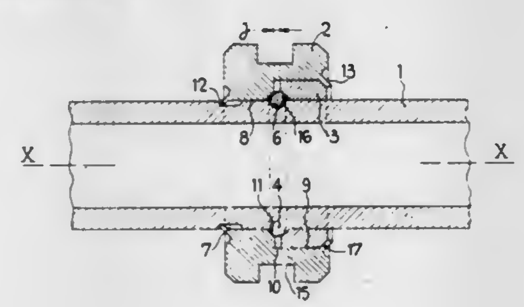

4. A piston and rod assembly for sliding in a cylinder, said assembly comprising a piston which has two annular members which define bores whose diameters correspond to an outside diameter of the rod, an annular groove in the rod, and a rigid ring partly engaged in the annular groove and interposed between the two annular members, the ring being in a prestressed condition in the groove between the two annular members, a first member of said annular members constituting a body of the piston and defining a counterbore in which a second member of said annular members is fitted, means for interconnecting the first member and the second member longitudinally of the rod, the rod having a second annular groove and said first annular member having, on a side thereof opposed to the second annular member, an axial extension which is formed over toward the rod into the second groove of the rod so as to retain said first annular member on the rod.

4,372,703
TAPERED SCREW FASTENING MEANS FOR BUSHINGS, SLEEVES AND BEARINGS
Jan Szostak, Lincroft, N.J., assignor to The Singer Company, Stamford, Conn.
Filed Jan. 12, 1981, Ser. No. 224,245
Int. Cl.[3] B25G *3/18;* **F16B** *21/00;* **F16D** *1/00*
U.S. Cl. 403—324 **12 Claims**

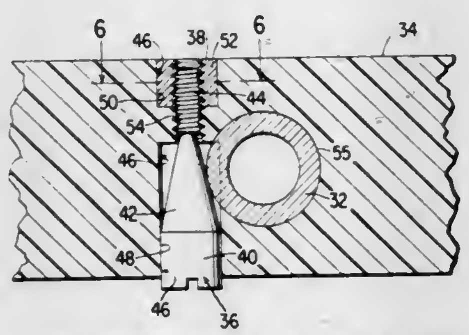

1. A clamping arrangement for a wall encircled cylindrical bushing, sleeve, bearing or like part which is supported in a structural member against movement in directions perpendicular to the longitudinal axis of the part, said arrangement including a hole in the structural member located to one side of the longitudinal axis of the supported part and extending perpendicularly in a non-radial direction relative to said axis, the hole being so disposed that a portion of the wall of said part projects into said hole; and a threaded clamping device in said hole including a material entering end portion, an opposite head end portion adapted to receive a tool for applying a turning torque thereto effective to advance the device in said hole, and a tapered intermediate portion which is converging in a direction extending from the head end portion to the material entering end portion and which is forced against said projecting wall portion of the supported part by the advance of the device to prevent movement of the supported part in said structural member.

4,372,704
METHOD AND APPARATUS FOR GROUTING OF OFFSHORE PLATFORM PILINGS
Lloyd C. Knox, Duncan, Okla., assignor to Halliburton Company, Duncan, Okla.
Continuation of Ser. No. 818,174, Jul. 22, 1977, abandoned. This application Jan. 12, 1979, Ser. No. 2,919
Int. Cl.[3] E02D *5/00, 5/14*
U.S. Cl. 405—225 **18 Claims**

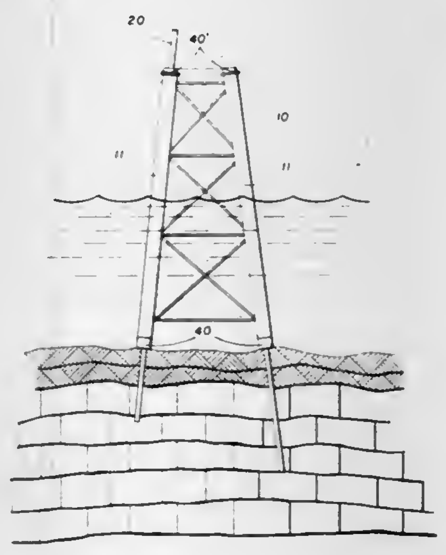

1. An inflatable packer for use in the sealing of an annulus formed by a jacket leg and/or pile sleeve of a marine platform having a pile inserted therethrough prior to the grouting of said annulus, or the like, said inflatable packer comprising:
an annular packer housing secured to said jacket leg, said pile sleeve, or the like;
a first guide ring secured within said annular packer housing having a portion extending therefrom;
a second guide ring secured within said packer housing having a portion extending therefrom;
an annular inflatable packer member having a first end portion, intermediate portion, a second end portion and having reinforcing means therein, the first end portion being secured from axial movement within said packer housing by being secured to the portion extending from said first guide ring while the second end portion of said inflatable packer member is secured from axial movement within said packer housing by being secured to the portion extending from said second guide ring;
a first back-up shoe secured to said first guide ring adjacent the first end portion of said inflatable packer member being located on the interior thereof, said first back-up shoe comprising:
a unitary annular band having a plurality of fingers extending therefrom, each finger of the plurality of fingers being separated from an adjacent finger thereby forming a space between each adjacent finger of the plurality of fingers
whereby said first back-up shoe overlays the first end portion of said inflatable packer member thereby preventing the first end portion of said inflatable packer member from extending into said annulus before the inflation of said inflatable packer to prevent said pile from damaging said inflatable packer member during the insertion of said pile therethrough; and
a second back-up shoe secured to said second guide ring adjacent the second end portion of said inflatable packer member being located on the interior thereof, said second back-up shoe comprising:
a unitary annular band having a plurality of fingers extending therefrom, each finger of the plurality of fingers being separated from an adjacent finger thereby forming a space between each adjacent finger of the plurality of fingers
whereby said second back-up shoe overlays the second said portion of said inflatable packer member thereby preventing the second end portion of said inflatable packer member from extending into said annulus before the inflation of said inflatable packer to prevent said pile from damaging said inflatable packer member during the insertion of said pile therethrough
whereby when said inflatable packer member is inflated to seal said annulus, said inflatable packer member is inflated inwardly so that the intermediate portion thereof firmly engages said pile to seal said annulus while said first back-up shoe and said second back-up shoe have the plurality of fingers thereof deflected inwardly until seated on said pile thereby lending axial support to said inflatable packer member and preventing axial extrusion of the first end portion and second end portion of said inflatable packer member over said first end ring and said second end ring respectively during the inflation of said inflatable packer member and the grouting of said annulus.

4,372,705
ARTICULATED EROSION CONTROL SYSTEM
Francis S. Atkinson, 4921 Purdue St., Metairie, La. 70003
Filed Nov. 18, 1980, Ser. No. 207,879
Int. Cl.[3] E02B *3/12*
U.S. Cl. 405—19 **17 Claims**

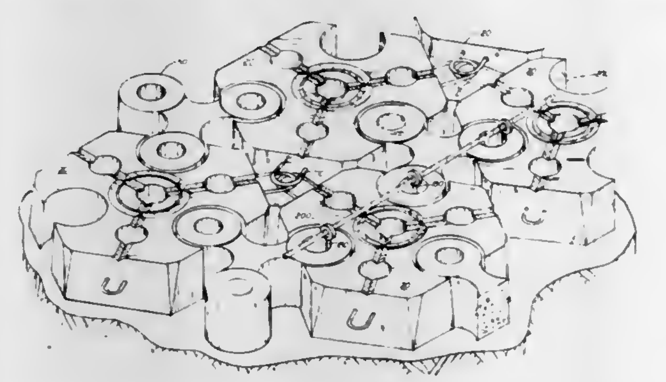

1. An erosion control mat comprising:
a. a plurality of erosion controlling members connected to each other so that the members form an interconnected network conforming to the underlying terrain for preventing erosion
b. adjacent member including complementary angularly articulating connection means for connecting the members and allowing articulation of the lower surfaces thereof relative to one another to conform to the underlying terrain; and
c. the articulating connection means including interconnecting sockets and arms on adjacent blocks, the arms loosely engaging the sockets so that the adjacent members are capable of articulating movement relative to each other and at the same time maintaining their relative spacial arrangement.

4,372,706
EMERGENCY CABLE GRIPPER
Kenneth E. Young, Houston, Tex., assignor to Exxon Production Research Co., Houston, Tex.
Filed Oct. 6, 1980, Ser. No. 194,514
Int. Cl.[3] B65H *59/16;* **E02B** *17/00*
U.S. Cl. 405—195 **12 Claims**

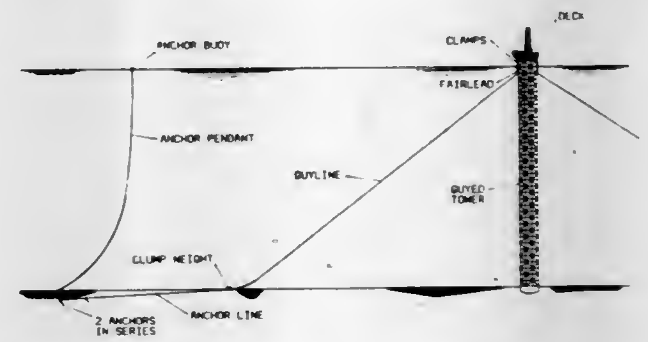

1. A safety device comprising:
a wire rope, and
guyline protection means having an inside surface capable of supporting the wire rope, and
wedge means detachably supported on the inside surface of the guyline protection means, having a wire rope gripping face adjacent to but separate from the wire rope, and having an impact face adjacent to but separate from a stopping ram, and having an inclined face adjacent to but separate from wedge blocks, and
said wedge blocks mounted fixedly on the inside surface of the guyline protection means, and having an inclined surface adjacent to but separate from the wedge means, and
a stopping ram positioned around the wire rope, but between the wedge means and a clamp and
a clamp fixed to the wire rope at a predetermined distance from the surface of the wedge means, and having sufficient strength and size to activate the proximate stopping ram.

4,372,707
PILE INSTALLATION AND REMOVAL MECHANISMS IN OFF-SHORE RIGS AND METHOD OF USING SAME
John T. Ostgaard, Los Angeles, Calif., assignor to Pipe Technology Systems, Inc., Ingleside, Tex.
Continuation-in-part of Ser. No. 98,505, Nov. 29, 1979, and a continuation-in-part of Ser. No. 3,593, Jan. 15, 1979, Pat. No. 4,257,720. This application Jan. 19, 1981, Ser. No. 226,521
Int. Cl.[3] E02B *17/00*
U.S. Cl. 405—224 **12 Claims**

1. A method for anchoring off-shore rigs including a plurality of legs and a deck structure for oil and gas well exploration, said method comprising the steps of:
(a) transporting said rig to a selected off-shore location;
(b) positioning said rig so that said legs extend upwardly from the ocean floor and support said deck above the water level, each of said legs including at least one pile guide extending therealong, a pile contiguous with said guide and a hydraulic jack within each of said guides above the corresponding one of said piles;
(c) securing said jacks to said legs at selected locations;
(d) extending said jacks and thereby driving said piles into the ocean floor;

(e) contracting said jacks and thereby causing said jacks to move downwardly along said guides, chasing said piles;

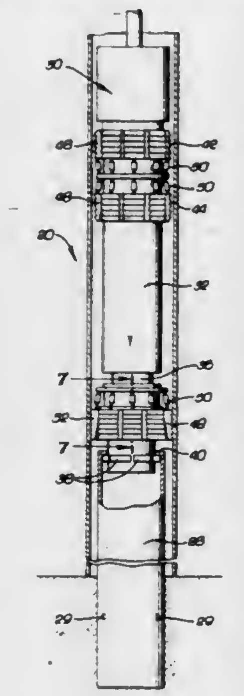

(f) repeating steps (a) through (e) until said piles have been driven far enough into said ocean floor to have the desired load-bearing capacity.

4,372,708

RESIN CAPSULE AND METHOD FOR GROUTING ANCHOR ELEMENTS IN HOLES OF VARIOUS LENGTHS

Arnold B. Bower, Jr., Bristol, Va., and Robert E. Dillon, Ballston Lake, N.Y., assignors to General Electric Company, Detroit, Mich.

Filed Aug. 28, 1980, Ser. No. 182,133

Int. Cl.³ E21D *20/02*

U.S. Cl. 405—261 **10 Claims**

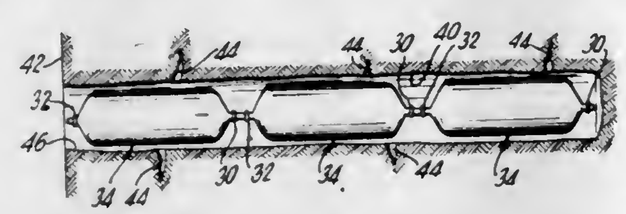

1. A two component resin capsule adapted to be inserted in drilled holes of standard or non-standard lengths in conjunction with anchor bolting systems comprising:

an elongated tubular member formed from a pliable frangible material having two discrete compartments therein;

a resin component in one of said discrete compartments;

a hardener component disposed in the other of said discrete compartments; and

a plurality of pairs of sealing means disposed along the length of said tubular membrane at spaced intervals such that said tubular membrane forms a plurality of interconnected sealed capsules, whereby a variable number of said sealed capsules may be inserted into said hole, and said two component resin capsule may be severed intermediate a selected pair of sealing means to selectively obtain a sealed portion of said two component resin capsule of variable length sufficient to fill said drilled hole.

4,372,709

EXCAVATION OR TRENCHING PLATE

Josef Krings, Hans-Boeckler-Str. 23, D-5138 Heinsberg-Oberbruch, Fed. Rep. of Germany

Filed Mar. 11, 1980, Ser. No. 129,326

Claims priority, application Fed. Rep. of Germany, Jul. 16, 1979, 7920284[U]

Int. Cl.³ E02D *17/00*

U.S. Cl. 405—282 **19 Claims**

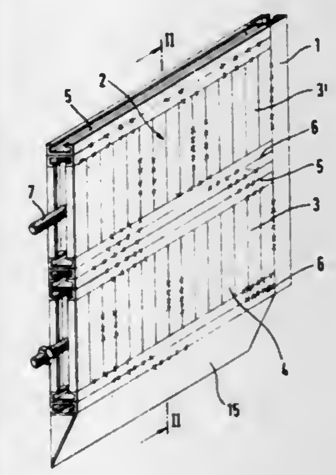

1. An excavation support comprising a panel formed of a plurality of contiguous generally vertically oriented beams collectively defining a plurality of side-by-side vertical chambers, a generally horizontally disposed tie bar means for connecting together said plurality of beams, upper and lower generally horizontal beams spanning respective upper and lower ends of said plurality of vertical beams, opposite endmost ones of said vertical beams each having a vertical channel opening lengthwise into its respective chamber with said endmost chambers opening sidewise in opposite directions through their respective channels, another panel formed of another plurality of contiguous generally vertically oriented beams collectively defining another plurality of side-by-side vertical chambers, another generally horizontally disposed tie bar means for connecting together said another plurality of beams, another upper generally horizontal beam and another lower generally horizontal beam spanning respective upper and lower ends of said another plurality of vertical beams, opposite endmost ones of said another plurality of vertical beams each having a vertical channel opening into its respective another chamber with said another vertical beam endmost chambers opening sidewise in opposite directions through their respective channels, said first-mentioned and another panel being in generally coplanar superposed relative relationship, and means for connecting together said first-mentioned and another panels.

4,372,710

APPARATUS FOR MANIPULATING FILTER ROD SECTIONS OR THE LIKE BETWEEN PRODUCING AND PROCESSING MACHINES

Alois Kasparek, Hamburg, and Jürgen Burger, Marschacht, both of Fed. Rep. of Germany, assignors to Hauni-Werke Körber & Co. KG, Hamburg, Fed. Rep. of Germany

Filed Jul. 11, 1980, Ser. No. 168,292

Claims priority, application Fed. Rep. of Germany, Jul. 20, 1979, 2929406

Int. Cl.³ B65G *51/02*

U.S. Cl. 406—28 **11 Claims**

1. Apparatus for manipulating rod-shaped articles between at least one producing machine and at least one processing machine, particularly for manipulating filter rod sections prior to admission into a filter tipping machine, comprising a pneumatic transporting unit having a plurality of discrete tubular conveyors for the transport of articles along separate paths, each of said tubular conveyors having an outlet for discharge of articles in the form of a file wherein the articles move lengthwise; a separating unit including discrete sections, one for each of said tubular conveyors, and each of said sections having means for converting the respective file into a series of axially spaced articles which continue to move lengthwise, each of said converting means comprising at least one rotary article engaging and advancing element; adjustable drive means for rotating each such rotary element independently of each other rotary element so that any one of said sections can continue with or interrupt the conversion of the respective file

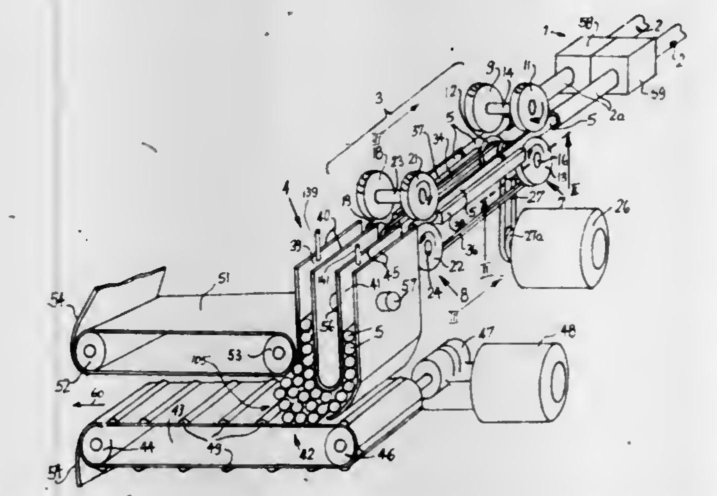

into a series of axially spaced articles independently of each other section; an orientation changing unit including discrete deflecting devices, one for each of said sections, each of said devices including means for changing the direction of movement of successive articles of the series of articles issuing from the respective section so that each of said series is transformed into a row wherein the articles move sideways; and means defining a common junction zone for reception of articles from said discrete deflecting devices and for conversion of the thus received articles into a stream wherein the articles move sideways.

4,372,711

HIGH PRESSURE FEEDING

Johan C. F. C. Richter, Nice, France, and Michael I. Sherman, Glens Falls, N.Y., assignors to Kamyr, Inc., Glens Falls, N.Y. Division of Ser. No. 123,947, Feb. 25, 1980. This application Jul. 30, 1981, Ser. No. 288,487

Int. Cl.³ B65G *53/30, 53/46*

U.S. Cl. 406—63 **15 Claims**

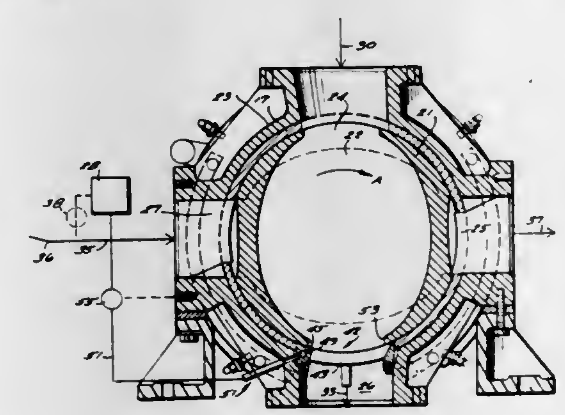

1. A high pressure transfer device including a pocketed rotor containing a pair of diametrically through-going pockets perpendicular to each other; a housing enclosing said rotor, said housing having four ports equally spaced around the periphery thereof for registry with inlets to and outlets from said through-going rotor pockets; means for rotating said rotor in said housing with respect to said ports in a given direction of rotation; and a screen operatively associated with one of said ports of said housing for allowing passage of liquid and particles below a predetermined size in a rotor pocket therethrough, but preventing passage of particles larger than a predetermined size therethrough; and pumping means for pressurizing liquid flowing through a port opposite said port with which said screen is associated, for passing pressurized liquid into said rotor pockets; wherein the improvement comprises:

fluid injection means operatively associated with a rearmost portion of said screen, relative to the direction of rotation of said rotor, for injecting fluid to effect dislodgement of any particles that might be lodged in said screen; and means for timing said fluid injection means so that fluid is injected therethrough substantially only when a trailing edge, in the direction of rotation of said rotor, of a through-going pocket in said rotor approaches said rearmost portion of said screen.

4,372,712

CONTINUOUS TRANSFER OF PARTICLES FROM A GASEOUS CONVEYING MEDIUM TO A LIQUID CONVEYING MEDIUM

John E. Powell, and Andrian J. C. Powell, both of Pittsburgh, Pa., assignors to Beloit Corporation, Beloit, Wis.

Filed Mar. 18, 1981, Ser. No. 245,110

Int. Cl.³ B65C *53/14;* F16K *19/00*

U.S. Cl. 406—153 **8 Claims**

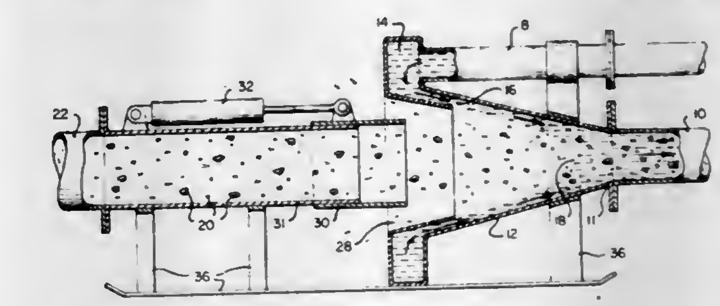

1. A method of continuously transferring particles from a gaseous conveying medium to a liquid conveying medium which comprises:

injecting a liquid into a cone-shaped inducer in a manner such that the liquid flows adjacent to the inducer's periphery toward its vertex;

directing a stream of the gaseous conveying medium and entrained particles through an inlet pipe into the center of the cone-shaped inducer and directed toward the inducer's vertex, thereby causing the conveyed particles to be injected into the liquid;

positioning inlet pipe so that the gaseous conveying medium can be exhausted from the inducer opposite its vertex;

exhausting the gaseous conveying medium from the inducer; and

removing the liquid conveying medium and entrained particles from the inducer.

4,372,713

BULK MATERIAL RECEIVER

James P. Kean, Jr., Maumee, Ohio, assignor to Process Control Corporation, Atlanta, Ga.

Filed Oct. 3, 1980, Ser. No. 193,741

Int. Cl.³ B65G *53/28*

U.S. Cl. 406—172 **9 Claims**

1. A bulk material receiver comprising a receiver hopper, a material inlet opening in said hopper above the lower portion of said hopper for receiving a flow of air and bulk material, a material outlet opening in the lower portion of said hopper for discharging the bulk material, at least two air openings in the upper portion of said hopper for the passage of air therethrough, a filter element mounted adjacent each air opening so as to filter the air passing through its air opening, a vacuum blower, an air exhaust conduit connected to the inlet of said vacuum blower and for communication at its other end with said air openings, valve means in said air exhaust conduit for controlling the flow of air through said air openings, said valve

means including means for placing said air openings in communication with said air exhaust conduit to direct air through the material inlet opening into the hopper and through all of said filter elements and through all of said air openings to said air exhaust conduit and for placing at least one of said air openings

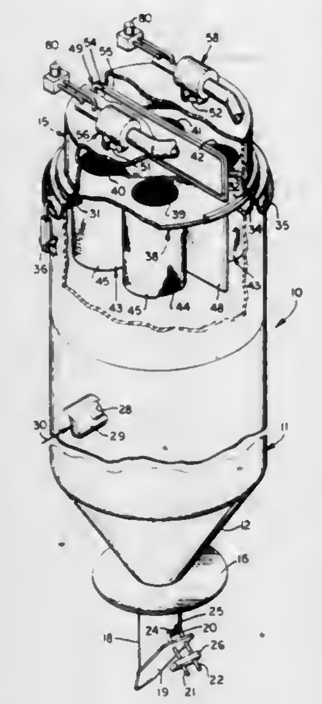

in communication with the atmosphere outside said hopper and others of said air openings in communication with said air exhaust conduit to direct air from the atmosphere through said at least one air opening and its filter element into the hopper and through the other filter element and the other air openings to said air exhaust conduit.

4,372,714

METHOD AND MOBILE MACHINE FOR REMOVING SURFACE IRREGULARITIES FROM A RAIL HEAD OF A RAILROAD TRACK

Josef Theurer, Vienna, Austria, assignor to Franz Plasser Bahnbaumaschinen Industriellgesellschaft m.b.H., Vienna, Austria

Filed May 19, 1980, Ser. No. 151,122

Claims priority, application Austria, Jan. 17, 1980, 248/80

Int. Cl.³ B23D *1/20;* E01B *31/15*

U.S. Cl. 409—293 **9 Claims**

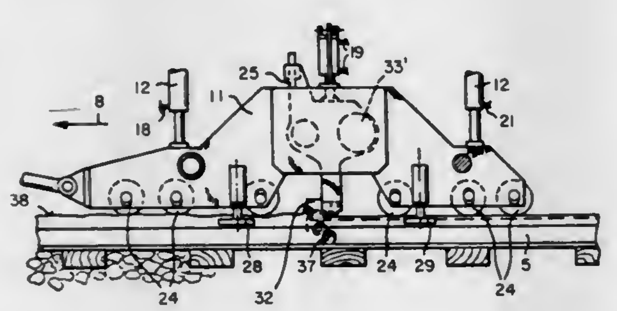

1. A method for removing such surface irregularities as ripples, corrugations and overflow metal from a rail head during and by the forward thrust of a mobile rail contouring machine, the rail head defining a gage side, a field side and a running surface, the gage and field sides extending from the running surface to a lower edge of the rail head, and the machine having a frame running on a railroad track on flanged wheels engaging the gage and field sides in a zone adjacent the running surface for continuous movement in an operating direction, the track including two rails each having said rail head and the machine comprising a rail planing tool mounting linked to the frame, guide roller means for vertically and laterally guiding the mounting along the rail head of a respective one of the rails, the guide roller means including guide rollers laterally guiding the mounting along a selected one of the rail head sides and vertically guiding the mounting along the running surface of the rail head, a rail planing tool head mounted on the mounting for lateral and vertical displacement in relation thereto, and a single rail planing tool carrying a cutting blade mounted in the tool head, which method comprises the steps of laterally pressing the mounting against the running surface and against the side of the rail head of the respective rail opposite the side thereof from which the surface irregularities are to be removed and while being guided laterally by said guide rollers in a region extending from the lower edge to below the zone adjacent the running surface, and simultaneously continuously moving the mounting along the said respective rail with a force of a sufficient thrust to plane chips or shavings off the rail head with the cutting blade and displacing the tool head in relation to the mounting during the continuous movement for engaging the cutting blade with the rail head for planing and disengaging it therefrom at the end of a planing operation.

4,372,715

PUNCH TYPE RELEASE LOCK

Faisal A. Naffa, Huntington Beach, Calif., assignor to AAR Corp., Elk Grove Village, Ill.

Continuation-in-part of Ser. No. 894,135, Apr. 6, 1978. This application May 7, 1979, Ser. No. 36,325

Int. Cl.³ B60P *7/08*

U.S. Cl. 410—79 **8 Claims**

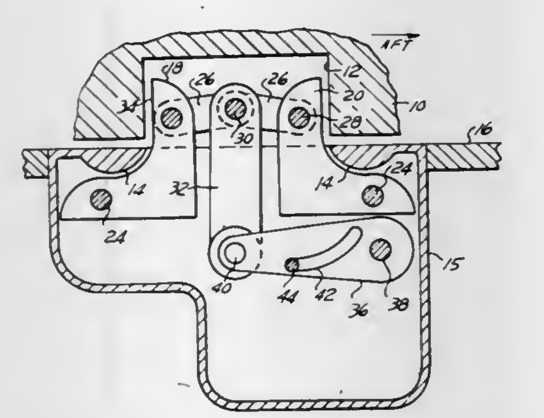

1. Load locking mechanism for locking a movable load-carrying support in loaded position against movement in an unloading direction, in which the support has a recess at one side thereof having confronting abutment surfaces at the sides of said recess, said mechanism being located at the side of a support when said support is in loaded position, said mechanism comprising a pair of detent members having oppositely facing abutments thereon confronting the abutment surfaces in said recess when in locking position, at least one of said detent members being pivoted for swinging movement of the abutment thereon into and out of the recess, said other detent member being pivotally interconnected with said one detent member and movable therewith to cause the abutments on said detent members to swing into and out of the recess and upon movement thereof into locking position in the recess to move apart and respectively toward the confronting surfaces of the recess to provide for entry into the recess when it is not in precise registration with the locking mechanism.

4,372,716

FREIGHT BRACING BULKHEAD TROLLEY AND LATCHING SYSTEM

Bennett O. Blout, Berwyn, Ill., assignor to Evans Products Company, Portland, Oreg.

Filed Nov. 17, 1980, Ser. No. 207,421

Int. Cl.³ B60P *7/14;* B61D *45/00;* B63B *25/24*

U.S. Cl. 410—134 **7 Claims**

1. In a freight bracing bulkhead assembly comprising a bulkhead supported by a trolley system having first and second

sprocket wheels located at the opposite ends of a trolley shaft, the teeth of said sprocket wheels cooperating with apertures located in a pair of spaced, longitudinally extending overhead tracks located in a cargo area for effecting the movement of the bulkhead between selected freight bracing positions in said cargo area, said bulkhead assembly including first and second locking means supported at the opposite, upper edges of the bulkhead for movement between a locked position and a released position, said first and second locking means each including a pair of locking pins adapted to cooperate with apertures located in said tracks when said locking means are in the

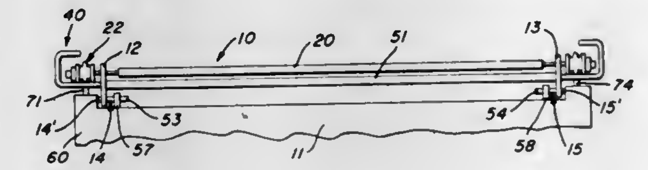

locked position, the improvement comprising locating said first sprocket wheel in the same plane as the pair of locking pins of the first locking means and locating the second sprocket wheel in the same plane as the pair of locking pins of the second locking means, said pins of each of said first and second locking means being spaced apart a distance such that, in the locked position, said pins cooperate with spaced apertures and, in the locked position, the downwardly facing of said teeth of each of said first and second sprocket wheels cooperates with an aperture located between the apertures with which said locking pins cooperate.

4,372,717

CELLULAR VOID FILLER

James D. Sewell, 5005 Yarrow Ct., Fair Oaks, Calif. 95628, and Norman E. Gordon, 7743 Claypool Way, Citrus Heights, Calif. 95610

Filed Jan. 20, 1982, Ser. No. 341,093

Int. Cl.³ B60P *7/16;* B61D *45/00;* B65G *1/14;* B32B *3/12*

U.S. Cl. 410—154 **10 Claims**

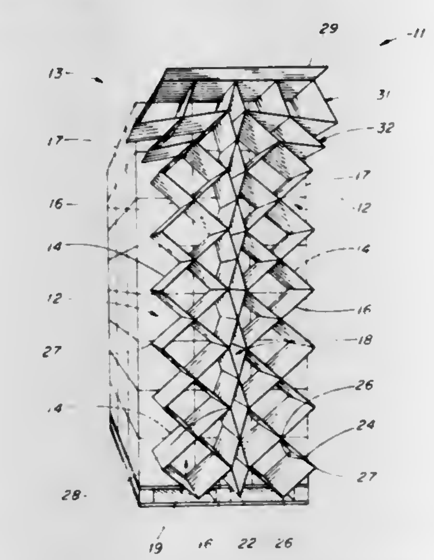

1. A structure expandable from a generally flat stack to form a cellular void filler comprising:

a. a horizontal cell row including an elongated, upper strip of sheet material overlying and coextensive with an elongated, lower strip of sheet material, said upper and said lower strips being attached at their respective end extremities and at two predetermined intermediate points to form a central, supportive cell having an upper apex, a lower apex, and opposing lateral apexes, said lateral apexes each at a respective one of said intermediate points, and a pair of generally square-shaped cells straddling said supportive cell, each of said generally square-shaped cells having an upper corner, a lower corner, an outer corner, and an inner corner, each of said inner corners located at a respective one of said intermediate points; and,

b. suspension means attached to said upper apex and said upper corners of said cell row for supporting said cell row in an expanded condition for filling a void.

2. A structure as in claim 1 further including a plurality of said horizontal cell rows stacked in vertical relation, said upper apex and said upper corners in each of said cell rows being attached to the respective said lower apex and said lower corners in the superjacent said cell row, and wherein the side dimension of said supportive cells between an apex and an adjacent lateral apex is less than the side dimension of said generally square-shaped cells between adjacent corners, the plurality of apex-connected supportive cells depending from said suspension means being effective substantially to support said plurality of said cell rows in an expanded condition, thereby maintaining said outer corners of said generally square-shaped cells in substantial vertical alignment.

4. A structure as in claim 2 wherein said suspension means includes an elongated, horizontal base strip overlying and supporting said plurality of horizontal cell rows, and in which one longitudinal edge of said base strip overlies and rests upon an adjacent stack of freight articles.

4,372,718

TAIL LAMP ATTACHMENT

Wieslaw S. Zaydel, Rochester, Mich., assignor to General Motors Corporation, Detroit, Mich.

Filed Nov. 3, 1980, Ser. No. 203,390

Int. Cl.³ F16B *27/00*

U.S. Cl. 411—366 **3 Claims**

1. A fastener for attaching a tail lamp assembly to a vehicle body panel having an aperture, said fastener comprising:

a stud member having a first shank portion adapted for attachment to the tail lamp assembly and a second shank portion having internal threads formed therein and a smooth outer cylindrical surface adapted for non-interfering insertion through the aperture of the panel; and

a nut member including a screw encapsulated within a molded nut, said molded nut having a bearing surface adapted to engage against the panel member and said screw having external screw threads thereon adapted for threaded engagement within the second shank portion whereby the tail lamp assembly is attached to the panel.

4,372,719

ANNEALING OF END RIM

Helmuth Supik, Sarstedt, Fed. Rep. of Germany, assignor to The Continental Group, Inc., Stamford, Conn.

Filed Jan. 21, 1981, Ser. No. 226,988

Int. Cl.³ B21D *51/00*

U.S. Cl. 413—9 **9 Claims**

1. A process for manufacturing a can end from a hard-to-deform ferrous metal wherein said can end is of the type including a chuck wall, a radially extending seaming flange and an end hook, said process comprising the steps of stamping the

can end from a hard-to-deform ferrous metal strip, annealing the area of said flange in an inert atmosphere for a period of

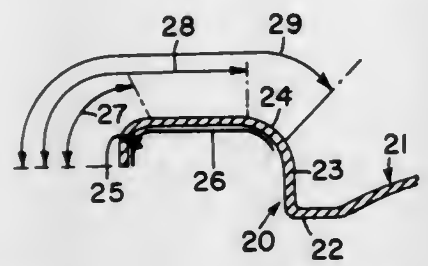

time less than two seconds, and thereafter applying to said flange a band of elastomeric sealing material.

4,372,720
FORMING OF END CLOSURES
Frank J. Herdzina, Schaumburg; Hans Kossmann, Barrington, and Harold C. Lemke, Grayslake, all of Ill., assignors to American Can Company, Greenwich, Conn.
Filed Sep. 4, 1980, Ser. No. 183,977
Int. Cl.³ B21D *51/44*
U.S. Cl. 413—56 8 Claims

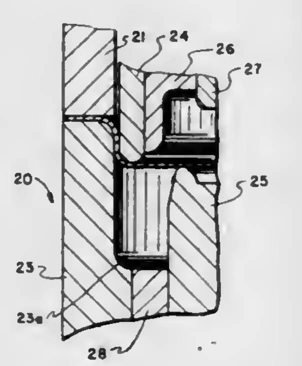

1. An apparatus for making a thin sheet of stock into a container end closure having a peripheral cover hook curl the extremity of which is inwardly tipped, said apparatus being carried in a press and having forming means carried for cooperative movement with each other and a blanked portion of said stock as at least one of said forming means is moved toward the other and wherein said forming means having at least four tool means including:

a first tool means with a shaped curved face configured like the inside cross-sectional contour of a cover hook curl,

a second tool means disposed within said first tool means and adapted for movement in one direction toward said first tool means against said blank to form the center thereof and pull the periphery of said blank over said first tool means developing a cover hook curl configuration thereacross,

a third tool means disposed between said first and second tool means and adapted to be independently positioned relative to said first and second tool means and with respect thereto for reforming said cover hook, and

a fourth tool means positioned about said first tool means and having an internal die curling radius with the external contour and peripheral shape of said cover hook curl for receiving same and for guiding the extreme edge of the cover hook curl inwardly toward the center of the end during reforming said end closure.

4,372,721
APPARATUS FOR CALIBRATING LINK POSITION TRANSDUCERS OF A TEACHING ROBOT AND A WORK ROBOT
Martin J. Harjar, Vermilion, and Jeffrey S. Noss, Bay Village, both of Ohio, assignors to Nordson Corporation, Amherst, Ohio
Filed May 18, 1981, Ser. No. 264,224
Int. Cl.³ B25J *1/00*
U.S. Cl. 414—5 13 Claims

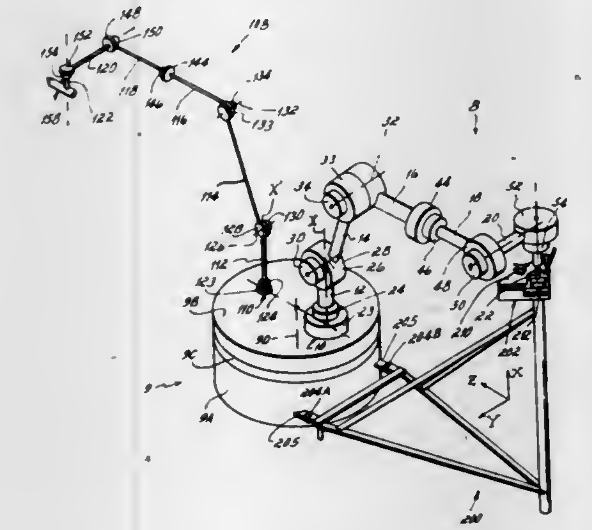

1. Apparatus comprising:

a relatively massive powered work robot having a base from which extends a series of articulated links interconnected at joints to provide plural degrees of freedom, each joint having an actuator for moving the links interconnected thereat relative to each other and a position transducer for providing a signal correlated to the relative position of the links interconnected thereat, said series of links terminating in an output link,

a relatively lightweight manually manipulatable unpowered teaching robot having a base from which extends a series of articulated links interconnected at joints to provide plural degrees of freedom, each joint having a position transducer for providing a signal correlated to the relative position of the links interconnected thereat, said series of links terminating in an output link, said teaching robot links and degrees of freedom simulating those of said work robot,

means to alternatively mount said work robot base and teaching robot at the same operative position in space,

a calibration fixture including:

a stationary member having first, second, and third manually orthogonal locating surfaces,

means to mount said stationary member in a fixed spatial position displaced from said same operative position in space,

a movable member alternatively mountable to said work robot output link and said teaching robot output link, said movable member having first, second, and third mutually orthogonal locating surfaces configured to simultaneously contact said respective first, second, and third locating surfaces of said stationary member only when said movable member occupies a predetermined reference spatial position and orientation,

cam positioning means jointly associated with said movable and stationary members to cam their respective first, second, and third locating surfaces simultaneously into contact with each other to locate said movable member at said predetermined reference spatial position and orientation, and

adjustment means associated with said position transducers of at least one of said work robot and teaching robot to equalize the outputs of the respective work robot and teaching robot tranducers when their bases are located in said same operative position in space and their respective output links are mounted to said movable member which has been located by said cam positioning means to occupy said predetermined reference spatial position and orientation.

4,372,722
HAY BALE TRAILER
Ronald L. Van Horn, Rte. 2, Box 237, Oakley, Calif. 94561
Filed Aug. 27, 1980, Ser. No. 181,897
Int. Cl.³ A01D *87/12*
U.S. Cl. 414—44 13 Claims

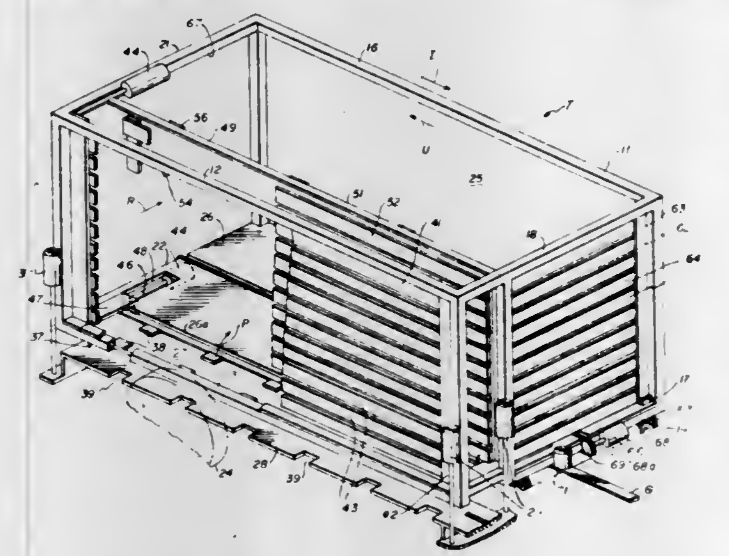

1. A hay bale trailer comprising, in combination, a body having an interior for the storage of hay bales, means for supporting said body for travel on the ground, a bottom wall on said body for supporting said stored hay bales, said bottom wall having a longitudinally extending opening adjacent one side of said body, shelf means mounted on said body for accommodating a row of hay bales in aligned underlying relationship with said opening, means for moving said shelf means vertically through said opening between a loading position below said opening and a stacking position above said opening to successively position a plurality of rows of bales in a vertically aligned stack in said body interior, means within said opening for retaining lowermost row of bales in said stack over said opening and means for sequentially moving said stack and successive stacks laterally from said stacking position towards the other side of said body with said stacks in side-by-side abutting relationship to store a plurality of stacks on said bottom wall within said body interior, wherein said shelf means includes a longitudinally extending platform mounted on said body in underlying aligned relationship with said opening, said platform having a substantially shovel-shaped portion on the forward end of said platform extending forwardly of said body for scooping up bales of hay successively from the ground during the travel of said body to position a row of bales on said platform.

4,372,723
AUTOMATIC BALE WAGONS
Frans J. G. C. De Coene; Adrianus Naaktgeboren, and Marc G. Vansteelant, all of Zedelgem, Belgium, assignors to Sperry Corporation, New Holland, Pa.
Filed Jul. 1, 1980, Ser. No. 165,153
Claims priority, application United Kingdom, Jul. 4, 1979, 7924332
Int. Cl.³ A01D *87/12;* B60P *1/36*
U.S. Cl. 414—111 17 Claims

1. An automatic bale wagon comprising a frame, a plurality of load floors mounted on the frame, bale pick-up means operable to pick up bales from the ground for delivery to one of the load floors, conveyor means including a first conveyor portion operable to convey bales on each load floor in a predetermined manner along a path of travel and a second conveyor portion operable to change the direction of movement of the bales at least at one point in the path of travel, bale support means movable in synchronism with the second conveyor portion to

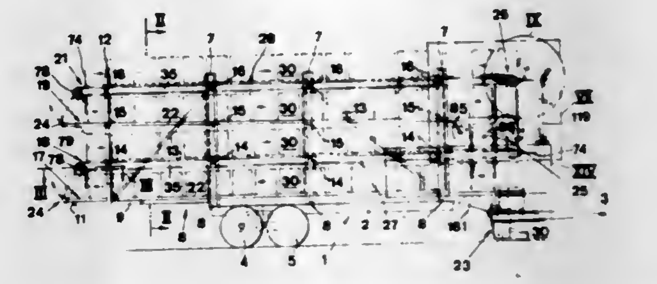

support the bales and to maintain said bales in engagement with said second conveyor portion at the point at which a change in the direction of movement of the bales is effected, and drive means for operatively powering said conveyor means.

4,372,724
APPARATUS AND METHOD FOR STORING ROD STOCK AND SUPPLYING SAME TO A SERVICING MACHINE
Paul Stolzer, Achern, Fed. Rep. of Germany, assignor to Stolzer Lagertechnik Gesellschaft mit beschränkter Haftung, Achern, Fed. Rep. of Germany
Filed Jun. 23, 1980, Ser. No. 162,199
Claims priority, application Fed. Rep. of Germany, Jun. 23, 1979, 2925469
Int. Cl.³ B65G *65/00;* E04H *6/00*
U.S. Cl. 414—281 12 Claims

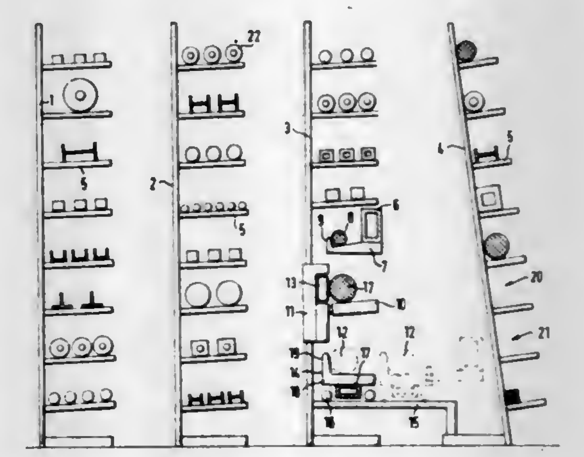

1. In an installation for storing a variety of elongate rock stock with their longitudinal dimensions all extending parallel to one another in a first direction and for automatically supplying a severing machine with that stock, which installation is composed of: a plurality of generally vertically extending shelving units spaced from one another in a second direction transverse to the first direction to define gangways between adjacent units and each presenting a generally vertically spaced plurality of shelving compartments projecting from at least one side of their associated shelving unit and each arranged to hold stock having a respective cross section, each shelving compartment being formed of a plurality of carrier arms extending in the second direction and spaced from one another in the first direction; a gantry crane including a crane bridge mounted for vertical movement in the gangways and horizontal movement in the second direction, and means carried by the bridge for conveying stock to and from selected compartments; and a rollway associated with one of the shelving units and spaced vertically from the compartments of the associated unit and including rollers projecting in the second direction toward the gangway at one side of its associated shelving unit and operable for conveying stock in a generally horizontal direction to and from the severing machine; the severing machine being located outside of the region occupied by the shelving units and the crane, the improvement wherein:

said installation further comprises a stock carrier located below said rollway and provided with means defining a stock supporting surface, said carrier being movable in the second direction between a stock-receiving position located directly below said rollway and a stock-transferring position located to one side of said shelving unit associated with said rollway and in the gangway at said one side of said associated unit; and means supporting said rollway for movement between a raised position for the conveying of stock to and from the severing machine and a lowered position substantially at the level of said carrier for permitting transfer of stock from said rollway to said carrier;

said rollway, when in its raised position, is spaced below the nearest compartment of its associated shelving unit by a distance sufficient to permit said crane bridge to be positioned directly above said rollway and beneath said nearest compartment; and

said means carried by said crane bridge, said shelving compartment carrier arms, said rollers of said rollway and said means defining a supporting surface of said carrier are constructed for permitting said means carried by said crane bridge to move vertically between said shelving compartment carrier arms and said rollers to effect transfer of stock therebetween, for permitting said rollers to move vertically between said means defining a supporting surface of said carrier to effect transfer of stock from said rollway to said carrier, and for permitting said means carried by said crane bridge to move between said means defining a supporting surface of said carrier to effect transfer of stock from said carrier to said crane bridge.

4,372,725
MULTI-WHEELED TRANSPORTER AND CONVEYING VEHICLE

Michael J. Moore, Naples, and Charles F. Studley, Jr., Arcadia, both of Fla., assignors to Good Earth Growers, Inc., Arcadia, Fla.

Filed Mar. 5, 1982, Ser. No. 355,276

Int. Cl.³ B60F *1/38*

U.S. Cl. 414—460 10 Claims

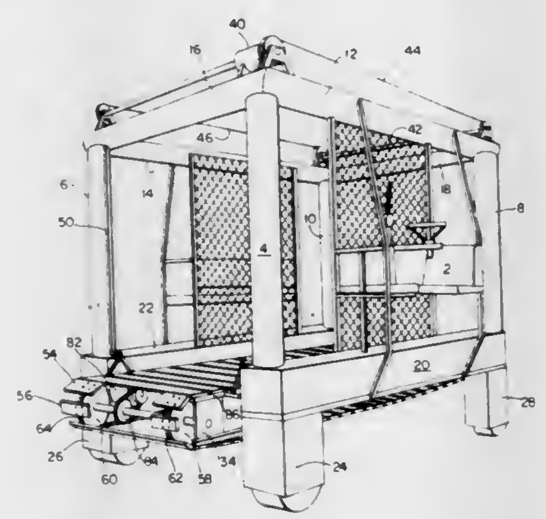

1. In a multi-wheel transporter vehicle of the straddle-type comprising first, second, third and fourth vertically extending corner upright members, each corner upright further comprising a wheel assembly at the lower end thereof and first drive means operable to control one or more of said wheel assemblies, the improvement comprising:

(a) a left-side longitudinally extending base unit connected between and proximate the lower ends of the first and third uprights and a right-side longitudinally extending base unit connected between and proximate lower ends of the second and fourth uprights;

(b) a front-side transversely extending brace unit connected between and proximate the upper ends of the first and second uprights, and a rear-side transversely extending brace unit connected proximate and between the upper ends of the third and fourth uprights; and

(c) a longitudinally extending endless conveyor platform assembly including second drive means for selectively defining a linear motion in the longitudinal direction for said conveyor, between said uprights, wherein said conveyor platform is supported proximate its forward end and rearward end by third drive means operable to vertically translate said platform assembly between a first position proximate the lower end of said uprights and a second position proximate the upper ends of said uprights, thereby enabling the first and second uprights and the third and fourth uprights transversely to straddle vertically extending obstacles therebetween, while maintaining an ability to provide a longitudinal conveyance for loads superposed upon said conveyor means.

4,372,726
MATERIAL-HANDLING APPARATUS

Theodore A. Lutz, R.D. 1, Box 276, Rochester Rd., Sewickley, Pa. 15143

Filed Apr. 1, 1980, Ser. No. 136,232

Int. Cl.³ B65F *1/00*

U.S. Cl. 414—517 12 Claims

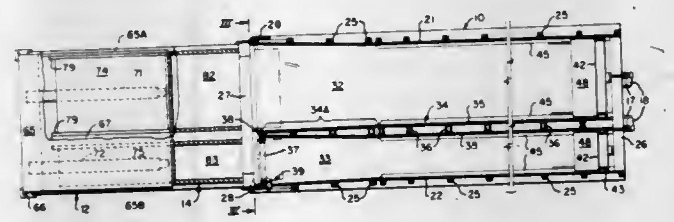

1. A material-handling apparatus including a container having upstanding side walls, a bottom wall and a roof wall adjoined together along the side edges thereof, said container further having a front end wall means adjoined with one end of said walls and rear door means at the other ends of said walls to form a partial end closure for the space between said side walls, hinge means to support said rear door means on one of said walls, an internal partitive wall supported by said floor wall and roof wall between said side walls for subdividing the space enclosed by said walls into two longitudinal storage compartments, each at an opposite lateral side of the internal partitive wall, latch means to retain said rear door means in closed position against part of some of said walls to define two portal openings each communicating with one of said two storage compartments for separate passage of material into each of the compartments, and a compartment door for one of said compartments to maintain material therein when said first-mentioned door is swung about said hinge means, said apparatus further including transfer means including two rams each communicating with one portal opening to separately advance material into said compartments under a compacting force, two charging chambers each having a material-receiving opening traversed by one of said rams for displacing material into a compartment of said container, means to support said transfer means for detachable connection with said container, and means for releasably clamping said transfer means to said container.

4,372,727
TRAILER INCLUDING A MULTIPLE FOLD POWERED RAMP TAIL

Ronald G. Fredrickson, and Joseph W. Bills, Jr., both of Mitchell, S. Dak., assignors to Dakota Manufacturing Co., Inc., Mitchell, S. Dak.

Filed Mar. 30, 1981, Ser. No. 248,972

Int. Cl.³ B60P *1/00*

U.S. Cl. 414—537 9 Claims

1. A trailer comprising,

a wheeled frame means having rearward and forward ends and a

support deck for supporting a load thereon,

means on the forward end of said frame means for connecting said frame means to a prime mover,

a multiple fold ramp assembly pivotally connected to the rearward end of said frame means,

said ramp assembly comprising a main ramp portion having an upper support deck portion and rearward and forward ends and being pivotally connected at its forward end, about a horizontal axis, to the rearward end of said frame means; a first stage ramp portion having an upper support deck portion and rearward and forward ends and being pivotally connected at its forward ends, about a horizontal axis, to the rearward end of said main ramp portion; and a second stage ramp portion having an upper support deck and rearward and forward ends and being pivotally connected, at its forward end, about a horizontal axis, to the rearward end of said first stage ramp portion,

said main ramp portion being selectively pivotally movable between first and second positions, the upper support deck

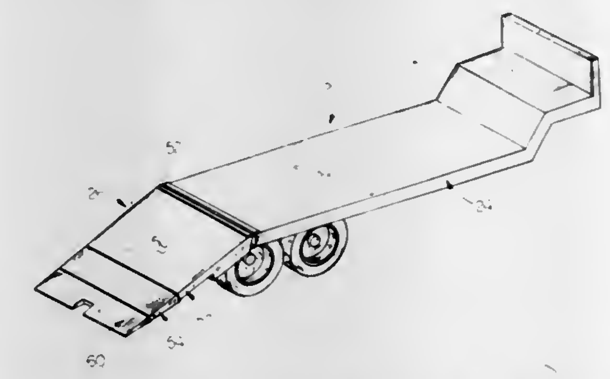

of said main ramp portion being substantially horizontal when said main ramp portion is in its first position and being inclined downwardly and rearwardly with respect to said frame means when said main ramp portion is in its second position,

said upper support deck of said main ramp portion being substantially parallel to said support deck on said frame means when in its said first position,

said first stage ramp portion being selectively movable from a stored position beneath the lower rearward end of said main ramp portion to an operative position wherein its upper support deck portion is substantially parallel with the upper support deck portion of said main ramp portion,

said second stage ramp portion being selectively movable from a stored position beneath the lower rearward end of said main ramp portion to an operative position wherein its upper support deck portion is substantially parallel with the upper support deck portion of said first stage ramp portion.

4,372,728
TOOL TRANSFER ARM ASSEMBLY FOR AUTOMATIC MILLING MACHINES

Kunio Murakami, Hamamatsu, Japan, assignor to Enshu Limited, Japan

Filed Jan. 2, 1981, Ser. No. 222,255

Int. Cl.³ B23Q *3/157;* B25J *9/00*

U.S. Cl. 414—590 6 Claims

1. A tool transfer arm assembly for automatic milling machines comprising

a fixed, vertically elongated, cylindrical housing having a bottom opening,

a cylindrical first shaft vertically slidably and axially turnably inserted into said housing through said bottom opening,

a cylindrical second shaft vertically and coaxially fixed within said first shaft,

an operating rod coupled, at its one end, to a first pneumatic cylinder fixed to said housing and, at its the other end, to the outer surface of said second shaft whilst allowing free axial turning of said second shaft so that operation of said first pneumatic cylinder causes corresponding vertical movement of said first and second shafts,

a pinion wheel coupled to a vertical spline formed in the outer surface of said second shaft whilst allowing free vertical movement of said second shaft,

a pinion rack operationally coupled to a second pneumatic cylinder and placed in meshing engagement with said pinion wheel so that operation of said second pneumatic cylinder causes axial turning of said second shaft without any interference by its vertical movement,

a vertically extending third shaft inserted into said second shaft by means of bearings, fixedly linked to said operating rod, and provided with a first bevel gear fixed to its bottom end,

a holding cylinder horizontally, radially and outwardly extending from said bottom opening of said housing,

a cylindrical block axially turnably inserted into said holding cylinder and fixedly carrying at its inner end a second bevel gear in meshing engagement with said first bevel gear carried by said third shaft,

an end closured fixed to the outer end of said cylindrical block so that a piston chamber is formed within said cylin-

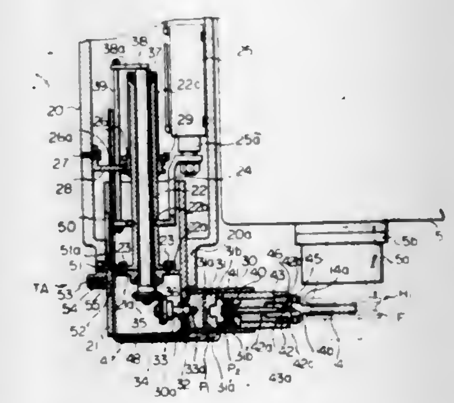

drical block, both stroke ends of said piston chamber being connected to separate supply lines of compressed air,

a piston head encased within said piston chamber and accompanied with an outwardly extending piston rod through said end closure,

a pair of cooperating holding jaws operationally linked to the outer end of said piston rod so that axial reciprocation of said piston head causes corresponding opening and closing of said holding jaws, and

a pin fixed to said housing in sliding engagement with a cam groove formed in the outer surface of said first shaft,

said cam groove including a vertically extending first section which controls a first vertical movement of said assembly for moving a tool holder towards and away from a spindle head in a milling position, a second section horizontally extending at its one end from the upper end of said first section which controls axial turning of said assembly for transferring said tool holder between milling and stand-by positions, and a third section vertically extending upwards from the other end of said second section which controls a second vertical movement of said assembly for moving said tool holder towards and away from a socket in said stand-by position.

4,372,729
TILT CONTROL

Floyd E. Buschbom, Long Lake; Donald L. Henke, and Glen D. Hansen, both of Maple Plain, all of Minn., assignors to Veda, Inc., Long Lake, Minn.

Filed Jul. 21, 1980, Ser. No. 170,597

Int. Cl.³ E02F *3/86*

U.S. Cl. 414—700 47 Claims

1. A vehicle comprising: a frame having generally upright post means, wheel means operably connected to the frame to support the frame from movement on the ground, means for

driving at least one of said wheel means, lift arm means, first pivot means pivotally connecting the lift arm means to the post means, power means connected to the frame and lift arm means operable to move the lift arm means from a down position to an up position, material accommodating means, second pivot means pivotally mounting the material accommodating means on the lift arm means, expandable and contractible means connected to the lift arm means, means pivotally mounted on the lift arm means and material accommodating means and connected to the expandable and contractible means operable to pivot the material accommodating means on the lift arm means for movement between a material holding position and a dump position, means for controlling the expansion and contraction of said expandable and contractible means thereby controlling the position of the material accommodating means relative to the lift arm means, and control means operably connecting the second pivot means and expandable and contractible means, said control means being operable in response to relative movement between the lift arm means and post means and relative movement between the material accommodating means and lift arm means in a manner to maintain the material accommodating means in a material holding position

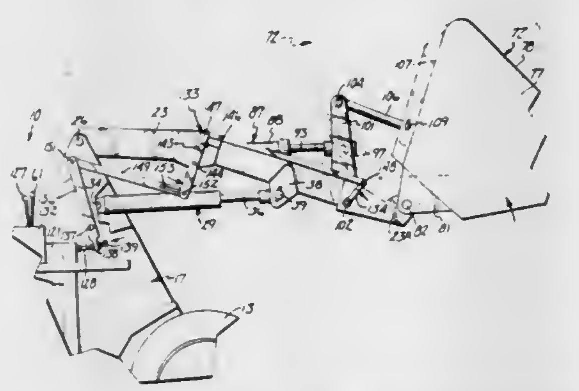

during the movement of the lift arm means between said down position and up position, said control means including a first arm, a second arm, linkage means operably connecting the first and second arms, said linkage means including lost motion means allowing the expandable and contractible means to pivot the material accommodating means from the material holding position to a dump position without affecting the operation of the means for controlling the expansion and contraction of said expandable and contractible means, said first arm being connected to and movable with the means pivotally mounted on the lift arm means, said second arm means being pivotally mounted on the post means, said second arm means having means cooperating with said means for controlling the expansion and contraction of said expandable and contractible means whereby on movement of said lift arm means said second arm is moved to actuate the means for controlling the expansion and contraction of said expandable and contractible means in a manner to control the position of the material accommodating means, said first arm being rotatable in response to movement of the material accommodating means between a first position when the material accommodating means is in the material retaining position and an over center position when the material accommodating means is in the dump position.

4,372,730

LOAD OUT PIVOTING CHUTE SYSTEM AND METHOD

Carroll H. Ladt, Paducah, Ky., assignor to Pebco, Inc., Paducah, Ky.

Filed Dec. 29, 1980, Ser. No. 221,352

Int. Cl.³ B65G *67/06*

U.S. Cl. 414—786 **20 Claims**

1. A load out chute system for controlling and directing the flow of relatively large quantities of bulky material, comprising, in combination:

(a) upper chute means having a top inlet opening and a bottom discharge opening defining an upper flow path;

(b) lower chute means having a top inlet opening and a bottom discharge opening defining a lower flow path;

(c) first valve means for opening and closing the upper chute to control feeding of material along said upper flow path;

(d) means for pivotally mounting said lower chute means in relation to the upper chute means, whereby said lower chute means is capable of communication with said upper chute means for alignment of said upper and lower flow paths;

(e) means for pivotally moving the lower chute means into and out of communication with said upper chute means to so align said flow paths, to adjust the slide angle of said lower flow path and to store the lower chute means in a raised position; and

(f) second valve means carried by said lower chute means for

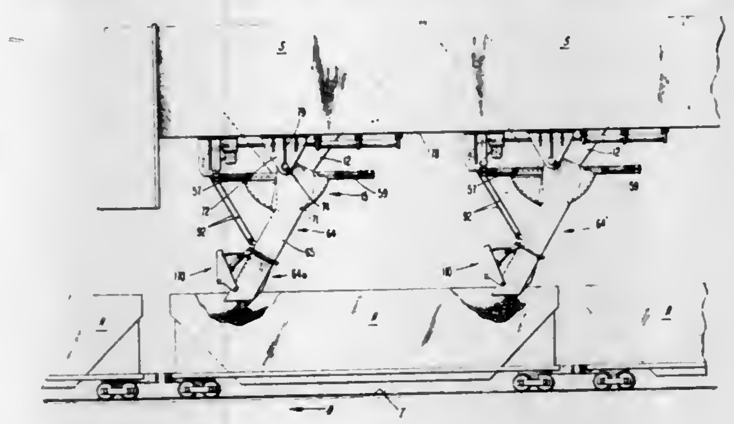

regulating the flow of material along said lower flow path in increments from full open to full closed.

20. A method for improving the efficiency of material loading facilities for directing the flow of material stored within storage means into a moving loading car, comprising the steps of pivotally lowering primary and secondary chute means into a discharge position as a loading car approaches at low velocity, fully opening gate valve means of the primary chute means as the car enters the discharge flow path, directing material through said primary chute means in rapid flow relation substantially filling said moving car, and partially opening a valve means positioned in proximity to the bottom discharge opening of the secondary chute means for incrementally adjusting and directing material in low flow relationship through said second chute means into the car, for topping off said car without significant material spillage.

4,372,731

FLUID FLOW CONTROL SYSTEM

Giusto Fonda-Bonardi, 2075 Linda Flora Dr., Los Angeles, Calif. 90024

Filed Oct. 14, 1980, Ser. No. 196,923

Int. Cl.³ F03B *3/18;* F04D *29/46*

U.S. Cl. 415—166 **7 Claims**

1. A fluid injection control mechanism for use in conjunction with radial turbines of the type having a housing provided with a fluid inlet and a rotor rotatably mounted on an axis within the housing, said control mechanism comprising:

(a) a pair of spaced apart, axially aligned, annular shaped plates fixedly mounted within the housing about the axis thereof, said plates being provided on their opposing faces with a plurality of grooves located at circumferentially spaced intervals;

(b) a plurality of fluid flow confining elements mounted between said plates each being carried in a pair of said grooves for sliding translational movement therewithin, said elements cooperating together to define a plurality of

fluid flow channels in communication with said fluid inlet; and

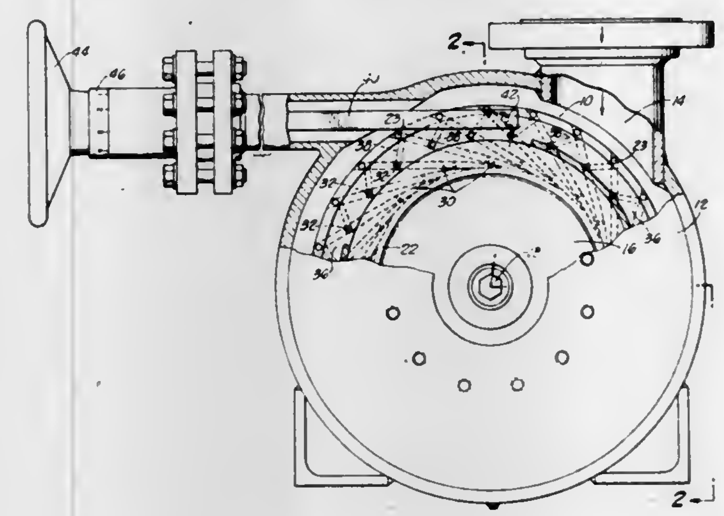

(c) control means for simultaneously translating each said fluid flow confining element equidistantly within the grooves provided in said plates.

4,372,732

CONTROL MECHANISM FOR A WINDMILL

James A. Browning, Hanover, N.H., assignor to Browning Engineering Corporation, Hanover, N.H.

Filed Dec. 29, 1980, Ser. No. 221,108

Int. Cl.³ F03D *7/04*

U.S. Cl. 416—14 **7 Claims**

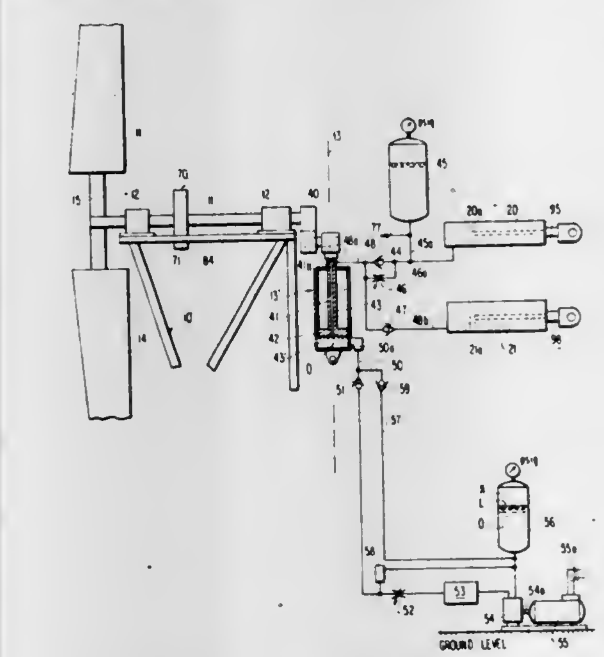

1. A hydraulic windmill for extracting useful energy from the wind, said windmill comprising:

a carriage mounted for rotation about an axis at right angles to the axis of the wind,

means for mounting a shaft on said carriage for rotation about its axis and in the direction of the wind,

windmill blades fixed to said shaft, projecting into the wind, and being driven thereby to effect rotation of the shaft about its axis,

a tail pivoted to said carriage for rotation about an axis parallel to the axis of rotation of the carriage and remote from the blades,

a closed loop hydraulic circuit, bearing hydraulic fluid,

pump means within said hydraulic circuit and being operatively coupled to said windmill shaft to pressurize said hydraulic fluid in said closed loop circuit,

a flow impedance within said circuit including at least useful energy conversion means for operation of an end use element,

the improvement comprising:

a first hydraulic cylinder operatively coupled between said carriage and said pivotable tail,

means for connecting said hydraulic fluid circuit to said first hydraulic cylinder for directly operating said first hydraulic cylinder in response to hydraulic fluid overpressurization to rotate said tail away from its operating plane and thereby shift said blades with respect to said wind to control the maximum output power of said hydraulic windmill,

a second hydraulic cylinder operatively coupled to said hydraulic circuit for sensing a loss in minimum required hydraulic pressure within said circuit as from a leak in the hydraulic system, said second hydraulic cylinder being operatively coupled to said tail for rotating said tail away from its operating plane in response to minimum hydraulic fluid pressure within said fluid circuit.

4,372,733

BUILDING CONSTRUCTION

Robert C. Tinning, 7430 Pyramid Pl., Los Angeles, Calif. 90046

Filed Aug. 21, 1978, Ser. No. 935,114

Int. Cl.³ B29C *5/02*

U.S. Cl. 425—60 **9 Claims**

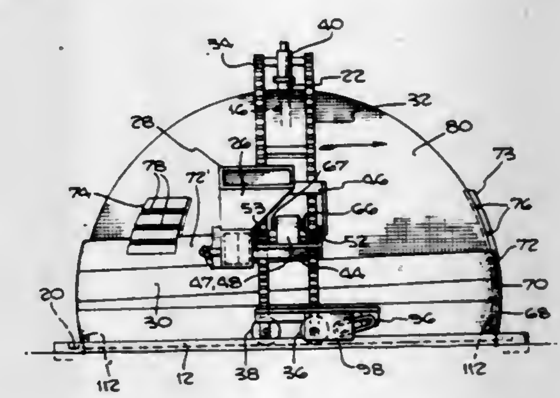

1. An apparatus for constructing concrete buildings comprising:

a removable mold forming a surface of revolution having a central axis and having a form defining the desired configuration of a concrete structure;

a support post mounted at said central axis;

an assembly including a concrete dispenser and local concrete storage means for supplying concrete to said dispenser; and

means including a movable frame for mounting said concrete dispenser for movement peripherally around said mold and progressively from the bottom to the top of said mold for applying concrete in strips over substantially the entire exterior surface of said mold, to form a thick wall of concrete on the outer surface of said mold, said mounting means including means for supporting said assembly substantially independent of the concrete wall being formed.

4,372,734

APPARATUS FOR MIXING AND EXTRUDING SIMULATED MEAT MIX FOR PET FOOD

Francis H. Dolan, Ontario, and Michael S. Connor, Cobourg, both of Canada, assignors to General Foods Inc., Ontario, Canada

Division of Ser. No. 228,532, Jan. 26, 1981. This application Dec. 29, 1981, Ser. No. 335,413

Claims priority, application Canada, Feb. 6, 1980, 345155

Int. Cl.³ A22C *7/00;* B29F *3/02, 3/08*

U.S. Cl. 425—131.1 **6 Claims**

1. Apparatus for the preparation of intermediate-moisture pet food having a first ingredient phase simulating lean meat and a second ingredient phase simulating fat, blended and

shaped to resemble small cuts of lean meat marbled with fat comprising
- first means for pressure-casting the first ingredient phase into an elongated ingredient receiving and blending compartment at its upstream end, and a hollow core positioned centrally within the upstream end of the compartment,
- and second means of capacity smaller than the first means for pressure casting the second ingredient phase centrally into the compartment through the hollow core,
- and a number of stationary baffles of generally helical con-

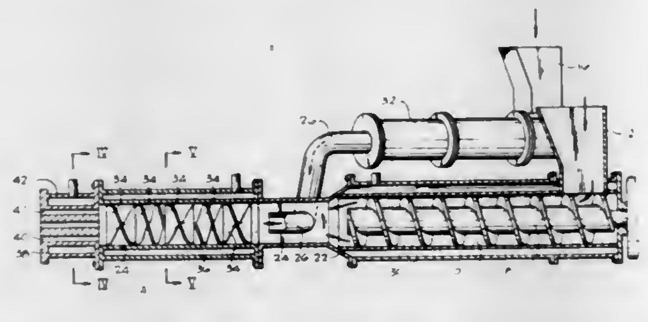

figuration positioned in tandem in the compartment downstream of the hollow core,
- upstream and downstream edges of the baffles being substantially straight and the downstream edge of each baffle being immediately adjacent and at an angle to the upstream edge of the following baffle,
- the baffles during passage of the ingredients cutting, dividing and axially rotating substantial portions of the ingredients to randomly blend the first and second ingredient phases,
- and a die block at the downstream end of the compartment through which the blended ingredients are extruded.

4,372,735

CONTROLLED FEED OF STABILIZING ROD ASSOCIATED WITH CONTROLLED APPLICATION OF BLOWING GAS

Wayne N. Collette, Westmoreland, N.H., assignor to The Continental Group, Inc., Stamford, Conn.

Filed Apr. 2, 1981, Ser. No. 250,495

Int. Cl.³ B29C *17/07*

U.S. Cl. 425—135 **3 Claims**

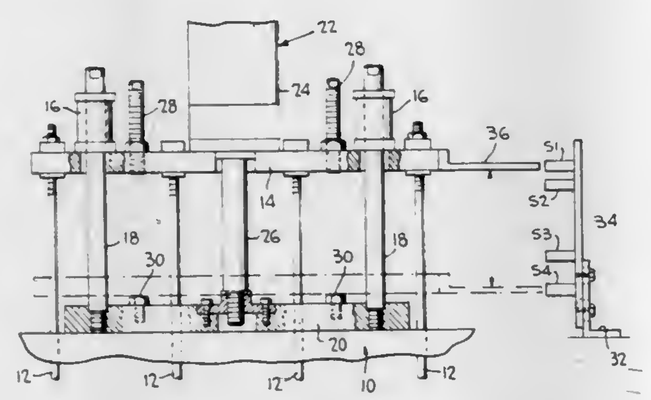

1. A blow molding apparatus of the type including a blow mold for receiving a preform and having a preform centering rod, feed means for advancing said centering rod from a retracted position to a position within and touching a preform positioned in said blow mold with said centering rod being in centering engagement with said preform, and control means for coordinating the application of blow gas with the movement of said centering rod wherein said centering rod is maintained in centering engagement with such preform while axial elongation of the preform is effected by blow gas pressure, said control means including a plurality of control switches for controlling the selective introduction of blowing gases into said preform, said control switches being spaced in the direction of centering rod movement, and switch actuating means connected to said centering rod for movement therewith and for sequentially actuating said control switches.

4,372,736

ADJUSTABLE ROLLER HEAD EXTRUSION DIE

Kendrick J. Gooch, Bethany; Hans R. Scharer, Woodbridge, and William Winter, Trumbull, all of Conn., assignors to USM Corporation, Farmington, Conn.

Filed Feb. 17, 1981, Ser. No. 234,950

Int. Cl.³ B29H *5/24*

U.S. Cl. 425—149 **4 Claims**

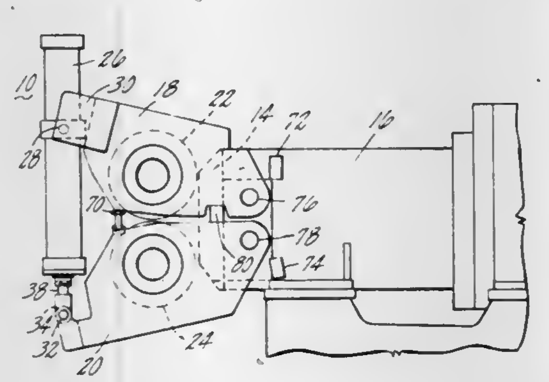

1. A roller die arrangement for an extrusion machine comprising a pair of opposed rolls mounted at the output end of an extruder, pivoted pairs of arms mounting the rolls at opposite ends for rotation and for bodily swinging movements between an open condition exposing the output end of the extruder and a closed condition in which clearance between the rolls form a roller die for shaping extruded material, piston and cylinder devices acting between the arms at opposite ends of the rolls for swinging the arms between open and closed conditions, fluid pressure means including an accumulator for fluid at a predetermined pressure acting on the piston and cylinder devices to hold the rolls in closed condition under a predetermined pre-load force to maintain the clearance acting on material extruded under a normal pressure, whereby material under greater than normal pressure moves the rolls apart against the pre-load force applied by the fluid pressure in the accumulator to cause the rolls to float on the extruded material.

4,372,737

METHOD AND APPARATUS FOR FORMING A PLASTIC FLUID CONTAINER WITH AN INTEGRAL HANDLE

Kenneth P. Thompson, Canton, N.C., assignor to Champion International Corporation, Stamford, Conn.

Division of Ser. No. 178,525, Aug. 15, 1980, Pat. No. 4,334,942. This application Jul. 13, 1981, Ser. No. 282,791

Int. Cl.³ B29C *17/00*

U.S. Cl. 425—393 **4 Claims**

1. Apparatus for forming a plurality of handles in a container comprising:
- an upper mandrel having walls which define a generally semi-toroidal cavity extending upwardly from a bottom surface thereof,
- a lower mandrel adapted to mate within the interior of a container blank tube with said upper mandrel, said lower mandrel including walls which define
- a generally semi-toroidal shaped cavity extending downwardly from the upper surface thereof, and
- a pair of dies hinged to each other and rotatable with respect to each other about a vertical axis,
- each of said dies having a surface shaped complementary to

the toroidal-shaped cavities in said abutted mandrels so as to deform separated portions of the carton tube into said

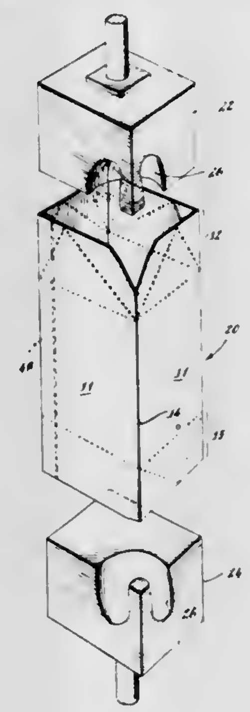

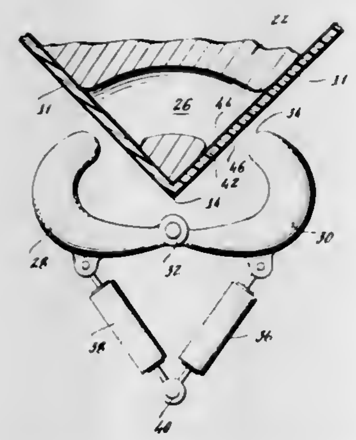

mandrel cavities to form a pair of handle portions on said container blank.

4,372,738

COLLET LOCK FOR A MOLD ASSEMBLY

John W. Black, Hickory Corners, and Ralph E. Slager, Portage, both of Mich., assignors to Pemco-Kalamazoo, Inc., Kalamazoo, Mich.

Filed Oct. 27, 1981, Ser. No. 315,375

Int. Cl.³ B29F *1/06*

U.S. Cl. 425—451.9 **10 Claims**

1. In combination with a mold having two mold parts movable between an open position spaced from each other and a closed position sealingly contacting each other, a mold locking mechanism for securely clamping said mold parts in said closed position, comprising:
- an elongate tie rod extending between said mold parts and supported on said one mold part by first mounting means, said tie rod having first locking means thereon at a location spaced from said one mold part;
- second locking means provided on the other of said mold parts and cooperable with said first locking means on said tie rod for preventing lengthwise movement of said tie rod relative to said other mold part, said second locking means including a plurality of locking members disposed at angularly spaced locations about the axis of said tie rod and supported for movement toward and away from said tie rod axis between retracted and locking positions, said tie and being received between said locking members when said mold parts are in said closed position, and each said locking member, when said mold parts are in said closed position and said locking members are in said locking position, being engaged with said first locking means on said tie rod;
- means for effecting movement of said locking members between said retracted and locking positions; and
- selectively actuable means for resisting movement of said locking members away from said locking position,

said second locking means including a collet having a sleeve which surrounds said tie rod axis and is fixed against move-

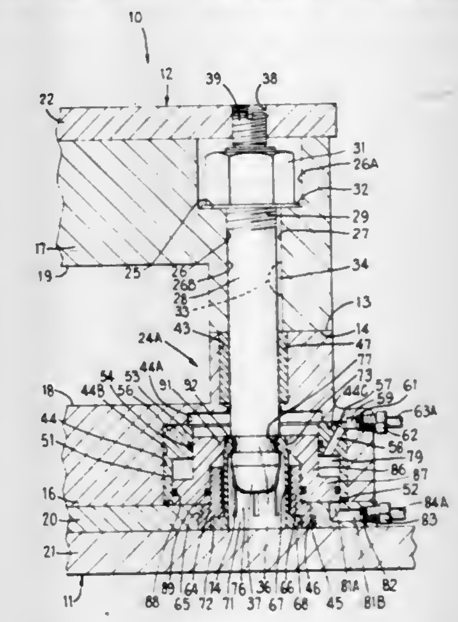

ment relative to said other mold part in a direction parallel to said tie rod axis, said tie rod being received within said sleeve when said mold parts are in said closed position, said sleeve having therein a plurality of peripherally spaced slots extending substantially axially from one end thereof and defining a plurality of axially extending arms which are resiliently flexible in directions substantially perpendicular to said tie rod axis, each said arm having a said locking member thereon adjacent said one end of said sleeve and on the side thereof facing said tie rod axis.

4,372,739

EXTRUSION NOZZLE

Heinz Vetter, Rossdorf, and Ernst Friederich, Darmstadt, both of Fed. Rep. of Germany, assignors to Röm GmbH, Darmstadt, Fed. Rep. of Germany

Filed May 13, 1981, Ser. No. 263,263

Claims priority, application Fed. Rep. of Germany, May 21, 1980, 3019280

Int. Cl.³ B29F *3/04*

U.S. Cl. 425—466 **5 Claims**

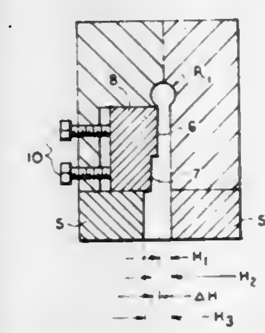

1. A wide-slit extrusion nozzle having adjustable operating points comprising, a nozzle head having discharge mouth with an exit height H_3, a central supply port and a distributor channel formed therein communicated with said supply port, said distributor channel having a straight output edge and a cross-section taken from the supply port to one end of the channel corresponding to the equation

$$R_i = R_o(b/B)^{1/3},$$

wherein
B is the width of the distributor channel from the center of the supply port to one end of the channel;
b is a width coordinate point measured from the end of the distributor channel;
R_o is the hydraulic radius of the distributor channel at the supply port; and
R_i is the hydraulic radius of the distributor channel at the coordinate b from the end of the channel;
and at least one adjustable choker bar mounted in said head between the distributor channel and the nozzle discharge mouth, said choker bar including a damming area surface having length dimensions L_i in the direction of flow and at distances b according to the equation

$$L_i = L_o(b/B)^{1/3},$$

wherein L_o is the length of the damming area at the supply port and
b and B are defined as above,
said damming area rising in a uniform jump ΔH of from 0.1 to 5 times the exit height H_3 above the area of the remainder of the surface of the choker bar and means for adjusting the height H_1 of the distributor channel.

4,372,740
MOLDING APPARATUS
Hiroshi Kuramochi, and Ryuichi Toyoda, both of Saitama, Japan, assignors to Kokoku Rubber Industrial Company Limited, Tokyo, Japan
Filed Feb. 20, 1981, Ser. No. 236,370
Claims priority, application Japan, Mar. 31, 1980, 55-40199
Int. Cl.³ B29G *3/00;* **B29F** *1/06*
U.S. Cl. 425—544 **5 Claims**

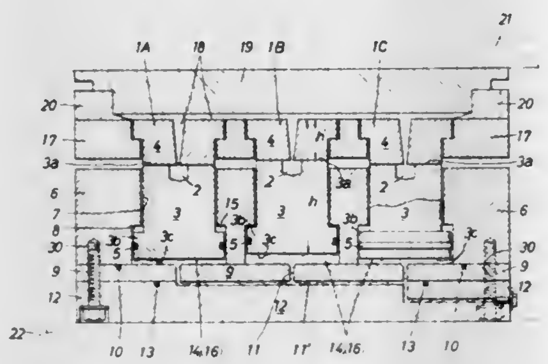

1. Apparatus for flashless molding of parts of moldable material, comprising:
holding means;
a first plurality of first mold halves disposed in said holding means;
a second plurality of second mold halves corresponding to said first plurality;
each of said first mold halves having a first mating surface sealingly mateable with a corresponding second mating surface of one of said second mold halves;
a cavity for molding said parts in at least one of said first and second molding halves;
means for moving said second plurality of second mold halves and said first plurality of first mold halves together until at least one of said first mating surfaces contacts its corresponding second mating surface;
means for permitting displacement of each of said first mold halves in said holding means whereby all of said first mating surfaces contact their corresponding second mating surfaces;
said means for permitting displacement including seal members effective to seal a space at an end of each of said first mold halves opposed to its respective first mating surface;
passages interconnecting all of said spaces; and
a fluid filling all of said spaces and said passages whereby displacement of any first mold half produces a uniform back pressure on all others of said first mold halves tending to displace them in an opposite direction whereby all of said first mating surfaces are forced into uniform mating contact with their respective second mating surfaces regardless of dimensional inequalities in said first and second pluralities.

4,372,741
HOT SPRUE VALVE ASSEMBLY FOR AN INJECTION MOLDING MACHINE
Albert Cane, Torrance, and Mitchell P. Brown, San Pedro, both of Calif., assignors to Discovision Associates, Costa Mesa, Calif.
Filed Oct. 31, 1980, Ser. No. 202,824
Int. Cl.³ B29D *17/00*
U.S. Cl. 425—556 **24 Claims**

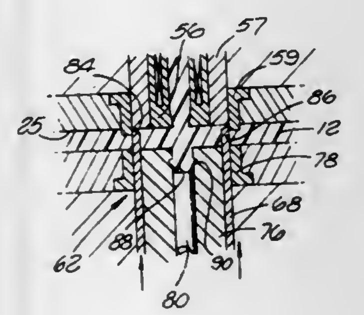

1. In an injection molding machine for producing centrally apertured record discs, a valve assembly for controlling flow of molten disc-forming material through a flow path defined by a generally cylindrical sprue bushing into a disc-shaped mold cavity, comprising:
valve means normally positioned in spaced relation with the sprue bushing and on a side of the mold cavity generally opposite the sprue bushing for allowing flow of the molten disc-forming material through the sprue bushing into the mold cavity, said valve means including a generally cylindrical sleeve valve movable through the mold cavity into bearing engagement with the spue bushing annularly about the flow path for preventing flow of the molten disc-forming material through the sprue bushing into the mold cavity, said valve means including means for forming a central aperture in the record disc formed within the mold cavity and for ejecting from the machine the portion of the disc-forming material displaced from said central aperture upon at least partial solidification of said portion.

4,372,742
ARITHMETICAL TEACHING AID
Roland A. L. Wentworth, 1 Earls Ter., London W.8, 6 LP, England
Filed Oct. 21, 1981, Ser. No. 313,518
Int. Cl.³ G09B *19/02*
U.S. Cl. 434—199 **10 Claims**

1. An arithmetical teaching aid including a display board comprising a rectangular array of display areas arranged in columns and rows, adjacent display areas being marked to represent successive powers of an arithmetic base number so that display areas (where there are more than one) representing a given power of the base number are arranged diagonally across the board, means for relatively moving the various rows of area displays so that displays in the different rows corresponding to the same power of the base number can be brought into columnar registration, wherein all display areas corresponding to a given power of the base number have a common tonal and/or textural characteristic which is different from the characteristic of the or each neighbouring display area corresponding to a different power of the base number and wherein the teaching aid further comprises sets of unit indicators for display on said display areas each unit indicator having a tonal

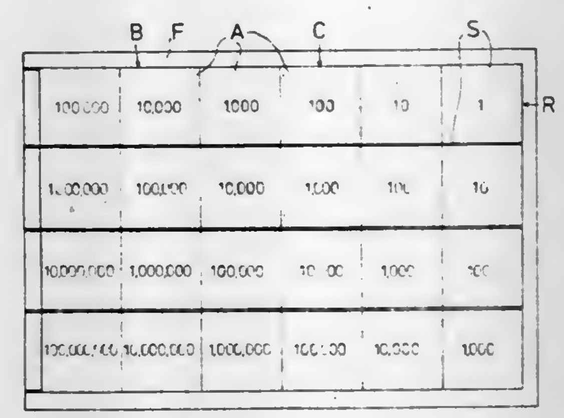

and/or textural characteristic identifiable with a said display area on which it is to be placed.

4,372,743

LOW-PRESSURE FIXATION OF VALVULAR TISSUE INTENDED FOR IMPLANTATION

Ernest Lane, Huntington Beach, Calif., assignor to American Hospital Supply Corp., Evanston, Ill.

Filed Jun. 22, 1981, Ser. No. 275,749

Int. Cl.[3] **A61F** *1/22;* **C14C** *3/16, 15/00*

U.S. Cl. 8—94.11 **11 Claims**

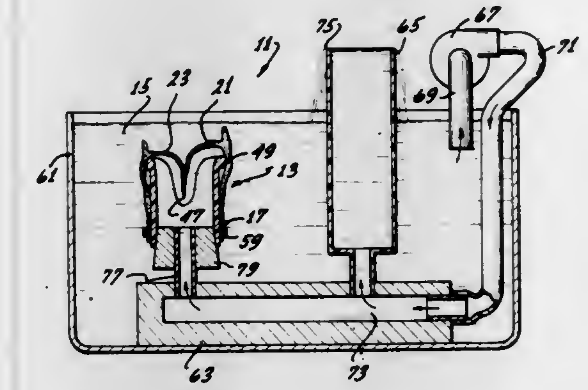

1. A method of tanning an animal aortic valve wherein the aortic valve includes an aorta segment and valve leaflets affixed to the aortic segment, said method comprising:

subjecting the valve to a tanning fluid at a differential pressure across the valve leaflets in the range of greater than zero and no more than about four millimeters of mercury with the differential pressure being in a direction to urge the valve leaflets closed to tan the valve and to tend to distort the valve; and

mechanically restraining the valve against substantial distortion during said step of subjecting.

4,372,744

PROCESS FOR DYEING CELLULOSE MATERIALS WITH REACTIVE DYESTUFFS BY THE EXHAUSTION METHOD

Dietrich Hildebrand, Odenthal, Fed. Rep. of Germany, and Franz Haas, Dornbirn, Austria, assignors to Bayer Aktiengesellschaft, Leverkusen, Fed. Rep. of Germany

Filed Mar. 20, 1980, Ser. No. 132,053

Claims priority, application Fed. Rep. of Germany, Apr. 7, 1979, 2914111

Int. Cl.[3] **D06P** *3/66, 5/00*

U.S. Cl. 8—400 **8 Claims**

1. Process for dyeing cellulose fibres and textile materials containing cellulose fibres with water-soluble reactive dyestuffs by the exhaustion method, characterised in that it is carried out using dye liquors, the particular fibre-reactive reactive dyestuff content of which is less than 10% of the total content of fixed dyestuff in the end dyeing.

4,372,745

CHEMICAL LUMINESCENCE AMPLIFICATION SUBSTRATE SYSTEM FOR IMMUNOCHEMISTRY INVOLVING MICROENCAPSULATED FLUORESCER

Richard M. Mandle, Pompton Lakes, and Yuan N. Wong, Boonton, both of N.J., assignors to Electro-Nucleonics, Inc., Fairfield, N.J.

Continuation-in-part of Ser. No. 105,257, Dec. 19, 1979, abandoned. This application Feb. 10, 1981, Ser. No. 233,057

Int. Cl.[3] **G01N** *33/54, 33/58, 33/52*

U.S. Cl. 436—537 **47 Claims**

1. A system for the detection of a biological analyte of interest which comprises a microencapsulated fluorescer material which has been conjugated to an immunological specie specific to the biological analyte of interest, a means of disrupting the capsule containing the fluorescer and an energy source other than electro-magnetic radiation which is capable of activating the fluorescer.

3. A method for the qualitative detection of a biological analyte of interest comprising:

(a) labeling an immunological specie specific to the analyte of interest with a microencapsulated fluorescer material which is biologically compatible with such specie;

(b) contacting the specie labeled by the microencapsulated fluorescer and the biological analyte of interest to form a specie labeled by a microencapsulated fluorescer/biological analyte complex;

(c) separating the specie labeled by a microencapsulated fluorescer/biological analyte complex;

(d) disrupting the capsule containing the fluorescer label thus freeing it to solution;

(e) contacting the freed fluorescer with an energy source other than electro-magnetic radiation which is capable of activating the fluorescer label; and

(f) determining the presence of chemiluminescent light emitted.

38. a microencapsulated fluorescer composition possessing a microcapsule structure having one or more reactive groups to enable the microcapsule's conjugation with an immunological specie specific to the analyte of interest.

43. A test kit for use in the detection of a biological of interest by means of an assay technique comprising, in a packaged combination, one or more containers holding

(1) a microencapsulated fluorescer material conjugated to an immunological specie specific to the biological of interest,

(2) a means for disrupting the membrane structure of the microencapsulated fluorescer, and

(3) chemical reagents capable of reacting to produce a high energy intermediate which will excite the freed fluorescer material to cause same to emit light.

4,372,746

AGENT FOR DETECTING PEROXIDATIVELY ACTIVE SUBSTANCES AND THE USE OF A POLYVINYLMETHYLACYLAMIDE IN SUCH AN AGENT

Klaus Habenstein, Lahntal, Fed. Rep. of Germany, assignor to Behringwerke Aktiengesellschaft, Marburg an der Lahn, Fed. Rep. of Germany

Filed Jul. 2, 1981, Ser. No. 279,731

Claims priority, application Fed. Rep. of Germany, Jul. 4, 1980, 3025372

Int. Cl.[3] **G01N** *33/52, 33/72*

U.S. Cl. 436—66 **8 Claims**

1. A rapid diagnostic agent for detecting, in body fluids and excreta, peroxidatively active substances, which comprises an absorbent carrier matrix containing a chromogen, a hydroperoxide, a detergent, an activator and a stabilizer, wherein the stabilizer comprises a compound of the formula I

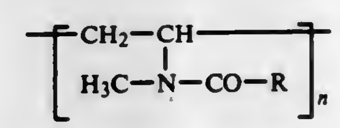

n = 10^2–10^5

R = C_1–C_4 alkyl

I

or contains such a compound.

4,372,747

GLYCOHEMOGLOBIN DETERMINATION

Kenneth Gabbay, Chestnut Hill, and Paul M. Gallop, Chestnut, both of Mass., assignors to Children's Hospital Medical Center, Boston, Mass.

Filed Jul. 31, 1981, Ser. No. 288,777

Int. Cl.[3] **G01N** *33/72, 33/66, 33/52*

U.S. Cl. 436—67 **7 Claims**

1. A method of measuring glycosylated hemoglobin comprising

providing a sample containing hemoglobin including an unknown quantity of glycosylated hemoglobin,

contacting said sample with an oxidizing agent to generate formaldehyde, and
measuring said formaldehyde as a measure of said unknown quantity of glycosylated hemoglobin,
said measuring being carried out by reacting said formaldehyde with a water-soluble amine or an ammonium salt and a β-diketone to generate a fluorescent compound, the fluorescence of which is measured as a measure of said glycosylated hemoglobin.

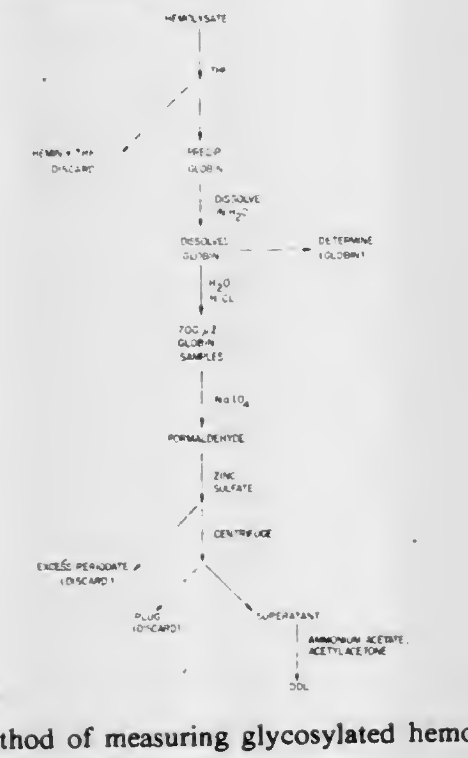

4. A method of measuring glycosylated hemoglobin comprising
providing a sample containing hemoglobin including an unknown quantity of glycosylated hemoglobin,
contacting said sample with tetrahydrofuran to remove hemin and precipitate globin,
contacting said globin with an oxidizing agent to generate formaldehyde, and
measuring said formaldehyde as a measure of said unknown quantity of glycosylated hemoglobin.

4,372,748
METHOD OF DETERMINING VEHICLE MISFUELING
John L. Bomback, Plymouth, Mich., assignor to Ford Motor Company, Dearborn, Mich.
Filed Aug. 17, 1981, Ser. No. 293,548
Int. Cl.³ G01N *31/06, 23/00*
U.S. Cl. 436—73 **6 Claims**

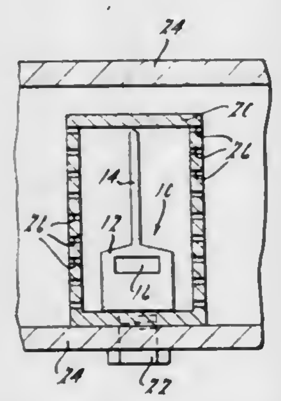

1. A method of determining if an internal combustion engine has been operated by burning a leaded fuel therein which comprises the steps of:
forming a misfueling detector from a glass material which is capable of absorbing lead when exhaust gases containing lead are passed thereover, said absorbed lead altering at least one measurable characteristic of the misfueling detector;
placing said misfueling detector in an exhaust system associated with an internal combustion engine;
allowing exhaust gases from the internal combustion engine to pass over said misfueling detector so that lead in said exhaust gases is absorbed by said detector;
removing said misfueling detector from the exhaust system associated with the internal combustion engine; and
measuring said measurable characteristic of said misfueling detector to determine whether or not said misfueling detector had absorbed lead therein while located in the exhaust system of the internal combustion engine.

4,372,749
METHOD FOR THE MANUFACTURING OF FUEL BRIQUETTES
Flemming S. Nielsen, 39, Strandparken, Himmelev, Denmark
Filed Jan. 23, 1980, Ser. No. 114,559
Claims priority, application Denmark, Jan. 30, 1979, 380/79
Int. Cl.³ C10L *5/46, 5/06*
U.S. Cl. 44—1 D **3 Claims**

1. A method for manufacturing fuel briquettes from refuse, the refuse consisting of preselected components of garbage which are comminuted and mixed with coal dust to form a mixture, the mixture being compressed in a press to form a solid body, the method being CHARACTERIZED IN THAT the amount of coal dust which is added to the comminuted refuse is controlled in response to the amount of power which is drawn by a motor which drives the press.

3. The method of claim 1 wherein the press is provided with pressing wheels, the step of comminuting the refuse being performed by said pressing wheels.

4,372,750
O-ALKYLATED/O-ACYLATED COAL AND COAL BOTTOMS
Ronald Liotta, Clark, N.J., assignor to Exxon Research and Engineering Co., Florham Park, N.J.
Continuation-in-part of Ser. No. 62,809, Aug. 1, 1979, Pat. No. 4,259,084, which is a continuation-in-part of Ser. No. 969,494, Dec. 14, 1978, abandoned, and Ser. No. 69,061, Aug. 23, 1979, Pat. No. 4,259,172, which is a continuation-in-part of Ser. No. 969,362, Dec. 14, 1978, abandoned. This application Dec. 8, 1980, Ser. No. 213,749
Int. Cl.³ C10L *5/00, 9/02*
U.S. Cl. 44—1 R **8 Claims**

1. A composition of matter selected from the group consisting of coal and coal bottoms wherein the hydrogen atom of substantially all the hydroxyl and carboxyl groups of the coal and coal bottoms, has been replaced with a group selected from the group consisting of the C_1 to C_{20} alkyl and acyl groups.

4,372,751
COAL-OIL MIXTURE APPARATUS
Wilson M. Chapman, Long Beach, and Norman L. Jensen, Jr., Irvine, both of Calif., assignors to Occidental Engineering Corporation, Irvine, Calif.
Filed Dec. 8, 1980, Ser. No. 214,366
Int. Cl.³ C10L *11/08, 1/32*
U.S. Cl. 44—2 **13 Claims**

12. Apparatus for producing a coal-oil mixture comprising:
crushing means including a primary, secondary and tertiary crusher for producing pulverized coal at a variable rate, said pulverizing means being disposed on a first and a second mobile platform;
emulsifier means, adapted for connection to external water and oil supplies, for producing an oil-water emulsion at a variable rate, said emulsifier mixing means being disposed on a third mobile platform;
mixing means, interconnected with said pulverizing means and said emulsifier means for producing a coal-oil suspension at a variable mixing rate, said mixing means being disposed on said first mobile platform, said coal-oil mixture including water and said coal being in suspension in said coal-oil mixture;
first conduit means for conveying the pulverized coal to said mixing means, said first conduit means being configured for extending between said first and second mobile platforms, said first conduit means being further configured for separation and reconnection for enabling modular transportation of the apparatus from one site to another on the first, second, and third mobile platforms;
second conduit means for conveying the oil-water emulsion to said second mixing means, said second conduit means being configured for extending between said second and third mobile platforms, said second conduit means being further configured for separation and reconnection for enabling modular transportation of the apparatus from one site to another on the first, second and third mobile platforms;

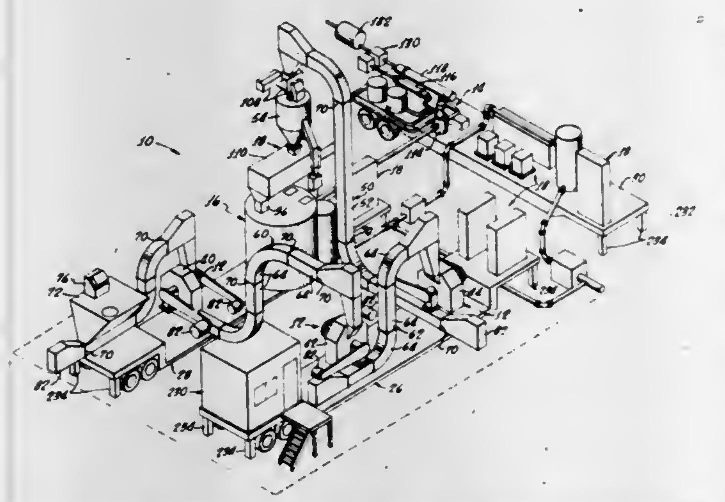

third conduit means for conveying coal interconnecting the primary, secondary and tertiary crushers, said third conduit means being configured for extending, in part, between the first and second mobile platforms, said third conduit means being further configured for separation and reconnection for enabling modular transportation of the apparatus from one site to another on said first, second and third mobile platforms; and,
control means, configured for receiving input signals corresponding to desired production rates of coal-oil mixture and in an operative relationship with said crusher, emulsifier and second mixing means, and first, second and third conduit means for varying the rate of pulverized coal production, the rate of emulsification and the mixing rate to produce said coal-oil mixture at output rates corresponding to said input signals, said control means being disposed on said first, second and third mobile platforms and including separable interconnection means between said pulverizing means, emulsifier and mixing means and said first, second, and third conduit means for enabling modular transportation of the apparatus from one site to another on said first, second and third mobile platforms.

4,372,752
FUEL FOR PISTON INTERNAL COMBUSTION INJECTION ENGINES
Jacques E. Lamy, 16, rue d'Estienne d'Orves, 92260 Fontenay-Aux-Roses, France
PCT No. PCT/FR78/00006, § 371 Date Mar. 7, 1979, § 102(e) Date Mar. 6, 1979, PCT Pub. No. WO79/00029, PCT Pub. Date Jan. 25, 1979
PCT Filed Jun. 30, 1978, Ser. No. 22,562
Int. Cl.³ C10L *1/00*
U.S. Cl. 44—50 **5 Claims**

1. A fuel designed for injection into a reciprocating internal combustion engine, said fuel consisting essentially of a stock containing light and heavy hydrocarbons present in crude oil and having the following properties:
(a) the light-hydrocarbon content is such that 10% of the volume distills at a temperature lower than about 70°–75° C., and the Reid vapor pressure is higher than 35 piezes;
(b) about 90% of the volume is collected at a temperature ranging between about 210° C. and 360° C.; and
(c) the final distillation is in the same temperature range as conventional gas-oil for current automotive engines.

4,372,753
LIQUID FUEL FOR USE IN INTERNAL COMBUSTION ENGINES
Mandayam J. Narasimhan, Jr., and Mandayam J. Thirmulachar, both of Walnut Creek, Calif., assignors to Source Technology, Inc., Minneapolis, Minn.
Filed Apr. 23, 1980, Ser. No. 143,031
Int. Cl.³ C10L *1/18*
U.S. Cl. 44—52 **12 Claims**

1. A liquid fuel for automotive use, said fuel comprising dimethyl ketone and gasoline, wherein said dimethyl ketone is present in an amount of about 59 percent and said gasoline is present in an amount of about 41 percent.

4,372,754
IGNITION SYSTEM FOR COAL GASIFIER
Paul Gernhardt; Wilhelm Danguillier; Karl Peter, all of Bochum; Wolfgang Grams, Herne; Siegfried Pohl, and Peter Schnitzler, both of Bochum, all of Fed. Rep. of Germany, assignors to Dr. C. Otto & Comp. G.m.b.H., Bochum and Saarbergwerke Aktiengesellschaft, Saarbrucken, both of, Fed. Rep. of Germany, a part interest
Continuation-in-part of Ser. No. 959,819, Nov. 13, 1978, abandoned. This application Nov. 26, 1979, Ser. No. 97,593
Int. Cl.³ C10J *3/68*
U.S. Cl. 48—77 **9 Claims**

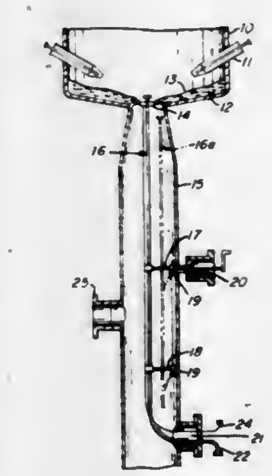

1. An ignition system for a fluidized stream of finely-divided coal particles in a pressurized gasifier housing having a slag overflow pipe coupled to a discharge vessel, said ignition system including the combination of:
an ignition burner arranged in said slag overflow pipe to ignite the fluidized streams of finely-divided coal particles within said gasifier housing,
a pilot burner supported to ignite said ignition burner,
fuel supply pipe means to deliver fuel for combustion by said ignition burner and said pilot burner,
ignition means to ignite fuel delivered by said fuel supply pipe to said pilot burner,
at least one support lever supported on said slag overflow pipe by a pivot extending transversely to the extended length of said slag overflow pipe, said support lever carrying said ignition burner, ignition means, fuel supply pipe and pilot burner for movement between an operative position wherein said ignition burner is situated at the slag-receiving opening of said slag overflow pipe and an

inoperative position remote from the slag-receiving opening where said ignition burner is protected from contact by slag and radiation heating, said at least one support lever moves said ignition burner within substantially only one plane extending through the centerline of said slag overflow pipe, and

means carried by said slag overflow pipe to form a pressure-tight mechanical connection for external passage of at least one of said support levers from said slag overflow pipe.

4,372,755

PRODUCTION OF A FUEL GAS WITH A STABILIZED METAL CARBIDE CATALYST

Radon Tolman, Evergreen, and Frank M. Stephens, Jr., Lakewood, both of Colo., assignors to Enrecon, Inc., Golden, Colo.

Continuation-in-part of Ser. No. 928,506, Jul. 27, 1978, abandoned. This application Oct. 30, 1980, Ser. No. 202,319

Int. Cl.[3] C10J *3/54*

U.S. Cl. 48—197 R **27 Claims**

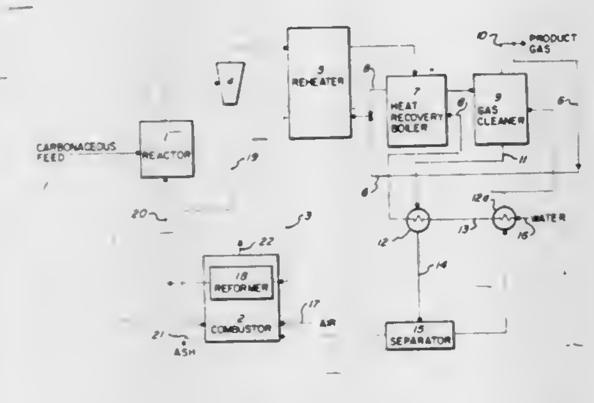

1. A process for the production of a fuel gas from a solid carbonaceous material comprising reacting in a single reaction zone the solid carbonaceous material in the presence of a stabilized metal carbide catalyst capable of substantially maintaining its physical integrity and chemical activity under gasification conditions, said catalyst comprising carbon and a metal alloy and having a free energy of formation of from −30,000 to 10,000 British thermal units per pound atom of carbon at the reaction conditions, said metal alloy comprising at least two metals selected from the group consisting of iron, silicon, manganese, cobalt, chromium, nickel, aluminum, vanadium, tungsten, molybdenum, calcium, boron, sodium and magnesium wherein one of said two metals forms a sufficiently stronger carbide to act as a stabilizing component thereby enhancing the chemical activity of the other metal carbide and a gas of which from about 10 to about 30 volume percent is selected from the group consisting of water vapor, carbon dioxide and mixtures thereof at a temperature and pressure sufficient to cause the gasification of the carbonaceous material and cause the formation of a sufficient amount of methane to produce a fuel gas wherein the temperature is from about 500° C. to about 900° C. and the pressure is from about 100 kilopascals to about 8300 kilopascals.

4,372,756

TWO-STAGE COAL GASIFICATION PROCESS

Charles M. Whitten, Brentwood; Robert H. Scott, Columbia, and Vaughn Mansfield, Gallatin, all of Tenn., assignors to Mansfield Carbon Products, Inc., Nashville, Tenn.

Filed Jun. 30, 1981, Ser. No. 278,992

Int. Cl.[3] C10J *3/00*

U.S. Cl. 48—202 **2 Claims**

1. A two stage process for gasifying agglomerating coal having a Free Swelling Index of from 2 to 9, volatile matter greatly in excess of 4% and consisting of more than 20% of minus ¼ of an inch, which comprises,

producing hot char with substantially no more than 15% of minus ¼ of an inch and containing no more than 12% volatile matter by carbonizing said coal in a horizontally moving bed reactor having a chamber at or only slightly above atmospheric pressure by reacting said coal with gas selected from the group consisting of air, oxygen and steam until the bed temperature is raised to between 1200° F. and 1800° F. and most of the tar and oil content of the coal is cracked to essentially carbon monoxide and hydrogen while leaving a hot char residue consisting essentially of carbon and minor amounts of volatile matter and ash,

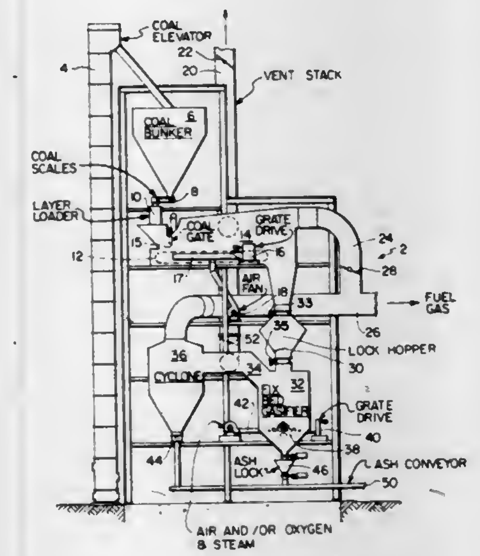

gravity feeding said hot char through a gas lock hopper into a fixed bed reactor having a chamber disposed below and isolated from the chamber of the moving bed reactor by the gas lock hopper, said fixed bed reactor having a gas outlet conduit leading to a remote utilization device, and

reacting said hot char in the fixed bed reactor with a gas consisting of air or oxygen and steam at a pressure substantially above atmospheric pressure and sufficient to force the gaseous reaction by-product from the fixed bed reactor chamber through the gas outlet conduit to the remote utilization device.

4,372,757

OFFSHORE PLATFORM DECK DRAINAGE

Uncas Favret, Jr., Rte. 3, Box 3880, Covington, La. 70433

Filed Jan. 27, 1981, Ser. No. 228,729

Int. Cl.[3] B01D *19/00*

U.S. Cl. 55—46 **13 Claims**

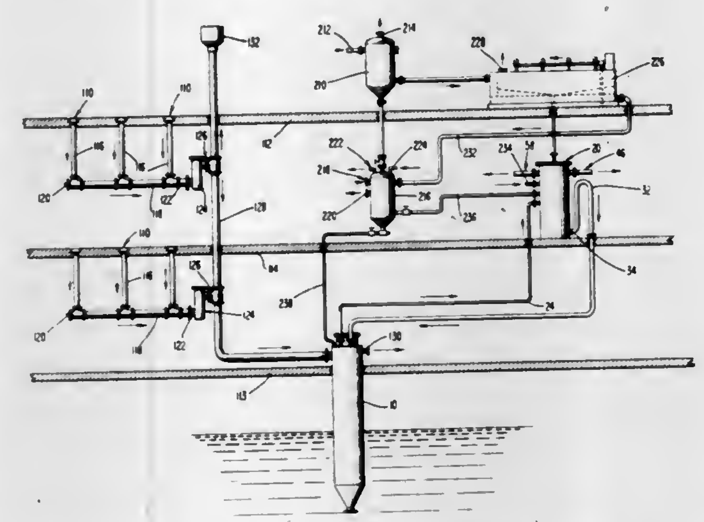

11. A method for removing oil-containing fluid from an offshore facility comprising the steps of:

collecting oil-containing fluid from a plurality of drains arranged about a deck of said offshore facility;

draining the collected oil-containing fluid to a vent stack which leads to and vents a separator for the oil of the oil-containing fluid, which separator is disposed below the drains, and which vent stack has an outlet to atmosphere located above the drains; and

sealing against a back flow of gas from the vent stack to the drains, while permitting the flow of oil-containing fluid from the drains to the vent stack.

4,372,758

DEGASSING PROCESS FOR REMOVING UNPOLYMERIZED MONOMERS FROM OLEFIN POLYMERS

Robert W. Bobst; Billy J. Garner, both of Charleston, W. Va., and Frederick W. Jacob, Balboa, Calif., assignors to Union Carbide Corporation, Danbury, Conn.

Filed Sep. 2, 1980, Ser. No. 183,375

Int. Cl.[3] B01D *19/00*

U.S. Cl. 55—48 **11 Claims**

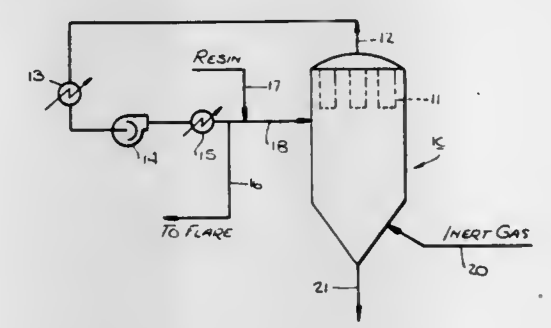

1. A process for removing unpolymerized gaseous monomers from a solid olefin polymer containing said gaseous monomers which comprises:

conveying said polymer to a purge vessel in a first gas stream, said gas being inert to said polymer and monomers and containing substantially no oxygen;

feeding a purge gas to said purge vessel, said purge gas being inert to said resin and said monomers and containing substantially no oxygen;

countercurrently contacting said polymer and said purge gas in said purge vessel to produce a second gas stream containing said purge gas, said conveying gas and said gaseous monomers and a polymer stream having a reduced amount of said gaseous monomers; and

recycling a portion of said second gas stream to said purge vessel.

4,372,759

ELECTROLYTE VAPOR CONDENSER

Richard A. Sederquist, Newington; Donald F. Szydlowski, East Hartford, and Richard D. Sawyer, Canton, all of Conn., assignors to United Technologies Corporation, Hartford, Conn.

Filed Aug. 28, 1981, Ser. No. 297,481

Int. Cl.[3] B01D *19/00*

U.S. Cl. 55—73 **8 Claims**

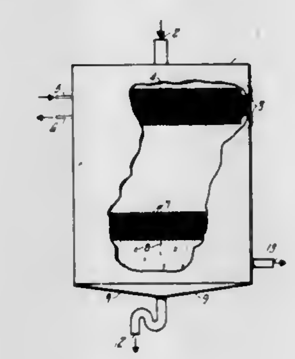

1. A method of separating electrolyte vapor from a water vapor containing gas stream in a fuel cell comprising cooling the gas stream containing the electrolyte vapor to a temperature below its vaporization temperature but above the vaporization temperature of the water, contacting the thus cooled gas stream with a high surface area passive condenser to condense the electrolyte vapor and removing the condensed concentrated liquid electrolyte from the gas stream.

4,372,760

APPARATUS FOR REMOVING PARTICULATE MATTER FROM A GASEOUS STREAM

Conrad G. Van Zantwyk, Roselle, N.J., assignor to Oxy-Dry Corporation

Continuation of Ser. No. 710,642, Aug. 2, 1976, abandoned, which is a continuation of Ser. No. 461,593, Apr. 17, 1974, abandoned, which is a continuation of Ser. No. 234,891, Mar. 15, 1972, abandoned. This application Apr. 10, 1978, Ser. No. 895,115

Int. Cl.[3] B01D *47/02*

U.S. Cl. 55—227 **2 Claims**

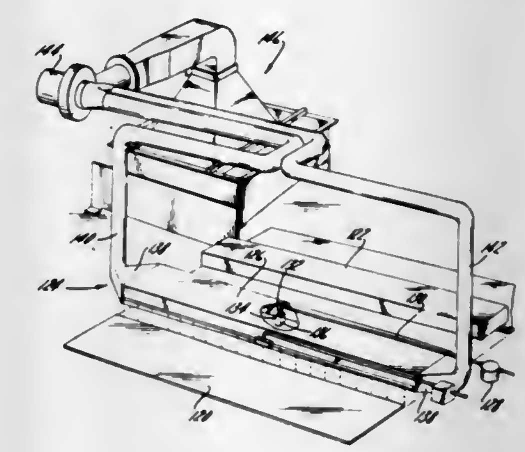

1. In an apparatus for cleaning the surface of a sheet having lightweight particulate matter thereon, such as dust, antioffset powders, and paper fuzz, which includes an ionizing means to neutralize the electrostatic forces between the particulate matter and the sheet, brush means contacting the sheet to loosen the particulate matter, a vacuum head defining a passage for collection of the particulate matter, a vacuum means to draw the particulate matter in an air stream and a particulate matter separating means for removing the particulate matter separating means including a receptacle containing a particulate matter entrapping liquid, a hood having an inlet to receive an air stream containing particulate matter and an open base and walls defining a chamber, said hood being positionable in telescoping relationship within said receptacle with the liquid level being at a spaced vertical distance of less than about ⅜ inch from the open base of said hood during static conditions, so that the particles in said air stream impinge on said liquid over the surface area projected by the open base, and means for automatically maintaining the liquid at a level such that the spacing between said hood and said liquid is less than about ⅜ inch during static conditions, said chamber being sized to permit expansion of the air stream introduced therein to thereby achieve substantially uniform distribution of the air stream as it exits the hood with the circumference of the open base and the spacing of the liquid level being such that the escape velocity of the air stream through the area defined by the circumference of the open base and the liquid level is less than about 3000 ft./min.

4,372,761

SCRUBBER FOR CLEANING DUST-LOADED GAS AND STEAM

Ingvald R. Lindroos, Frövi, Sweden, assignor to Rilett Energitjanst AB, Sweden

Filed Mar. 10, 1981, Ser. No. 242,233

Claims priority, application Sweden, Mar. 14, 1980, 8002023

Int. Cl.[3] B01D *47/06*

U.S. Cl. 55—260 **8 Claims**

1. A scrubber for cleaning dust-loaded gas and/or steam, comprising an inlet duct for the gas and/or steam and an outlet,

at least one nozzle arranged in the scrubber for atomizing a washing liquid to be distributed over the cross-section of the scrubber, a scraping device located in the inlet duct on the inside thereof, said scraping device being mounted for reciprocating rotary movement relative to the inlet duct, said scraping device including a plurality of interconnected rods in parallel

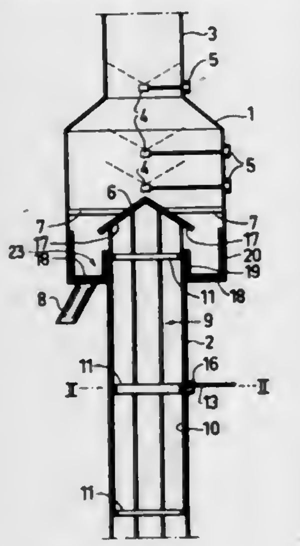

with an axial direction of the inlet duct, each of said plurality of rods being closely adjacent an inside peripheral surface of the inlet duct, said rods being only interconnected by at least one annular ring such that no portion of the scraping device in the inlet duct extends inwardly of the at least one annular ring toward the axis of the duct.

4,372,762
DUST COLLECTOR AND FILTER UNIT
Claude S. Cooley, 103 Inverness, Roanoke, Tex. 76262
Filed Feb. 9, 1981, Ser. No. 232,855
Int. Cl.³ B01D ***50/00***
U.S. Cl. 55—273 **13 Claims**

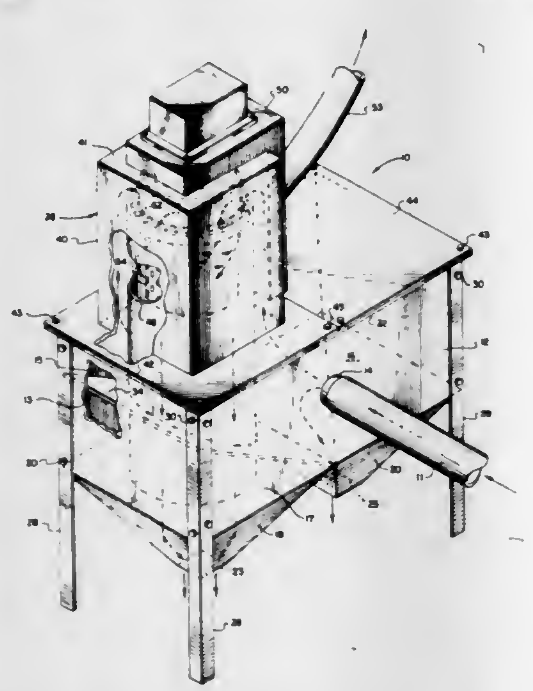

2. Apparatus for separating particulate material from an air flow stream or the like comprising:
- a housing including a first member defining a first chamber in flow receiving communication with an air flow stream laden with entrained particulate material, said first chamber defining means for separating relatively coarse particles by inertial and gravitational forces acting thereon;
- a first hopper in said housing in communication with said first chamber for receiving material separated from said air flow stream;
- a second chamber in said housing defined at least in part by means comprising an elongated duct disposed in said housing;
- a partition disposed within said first member and forming a common wall separating said first chamber from said second chamber;
- a porous media filter element disposed in said part of said second chamber defined by said duct;
- said housing including a second member comprising a vertically extending tower section and said duct extends from said first member into said tower section and forms generally vertically extending passage means between said second member and said duct and interconnecting said first and second chambers for conducting said air flow stream generally upward toward said second chamber from said first chamber, said passage means terminating at an inlet to said second chamber whereby said air flow stream flows generally downwardly upon entering said second chamber;
- a second hopper in said housing in communication with said second chamber for receiving material separated from said air flow stream in said second chamber, said duct extending vertically downward through said partition toward said second hopper; and
- conduit means in communication with said filter element for conducting relatively clean air from said housing after said air has passed through said filter element.

4,372,763
AIR FILTER ASSEMBLY
Charles L. Champlin, Rittman; John T. Misura, Wadsworth, both of Ohio, and Carl J. Reiser, Ada, Mich., assignors to Packaging Corporation of America, Evanston, Ill.
Filed Mar. 30, 1981, Ser. No. 248,697
Int. Cl.³ B01D ***46/10***
U.S. Cl. 55—501 **4 Claims**

1. An air filter assembly comprising a compressible air pervious multi-sided filter panel, a multi-sided frame in supporting engagement therewith and having a periphery thereof adjustable from a collapsed first mode to an operative second mode; said frame being formed from a single blank of foldable sheet material and including a foraminous substantially planar center section having a concealed surface thereof in supporting face-to-face engagement with one surface of said filter panel, the frame periphery including a marginal section delineating said center section and being substantially coplanar therewith, said marginal section having inner portions connected to said center section and outer portions to which a plurality of elongated peripheral sections are foldably connected, said peripheral sections constructed and arranged with respect to one another so as to substantially delimit said marginal section and being arranged in first and second alternate pairs, said peripheral sections constructed and arranged with each other and said marginal section to form a substantially continuous hollow verge encompassing only the periphery of said multi-sided filter panel which extends over the marginal section when said frame periphery is in said operative second mode; when said frame periphery is in said inoperative first mode, each of said peripheral sections being independently folded inwardly towards said filter panel and forming a substantially flat multiply flange overlapping peripheral portions of the filter panel and compressing same between said flange and said center section, said folded peripheral sections when said frame periphery is in said inoperative first mode being disposed within an area defined by said marginal section outer portions, each of said peripheral sections being provided with a plurality of foldably connected elongated panels, the first pair of alternate peripheral sections having opposite end portions of certain elongated panels thereof overlying corresponding end portions of certain elongated panels of the second pair of alternate peripheral sections when said frame periphery is in said first mode; the overlapped panel end portions of the second alternate pair of peripheral sections being disposed in angular abutting corner-forming relation with the adjacent panel end portions of said first alternate pair of peripheral sections, when the frame periphery is in said operative second mode and restraining movement of said frame peripheral sections from said second mode to said first mode; each of said peripheral sections, when said frame periphery is in said operative second mode, having adjacent foldably connected elongated panels in angular relation and alternate panels in opposed relation; one of the panels having a substantial portion thereof affixed to an adjacent portion of the marginal section and remaining affixed thereto when said frame periphery is moved from said inoperative first mode to said operative second mode.

4,372,764
METHOD OF PRODUCING GASEOUS OXYGEN AND A CRYOGENIC PLANT IN WHICH SAID METHOD CAN BE PERFORMED
Alan Theobald, Purley, England, assignor to Air Products and Chemicals, Inc., Allentown, Pa.
Filed Jul. 15, 1981, Ser. No. 283,593
Claims priority, application United Kingdom, Jul. 22, 1980, 8023899
Int. Cl.³ F25J ***3/04***
U.S. Cl. 62—13 **5 Claims**

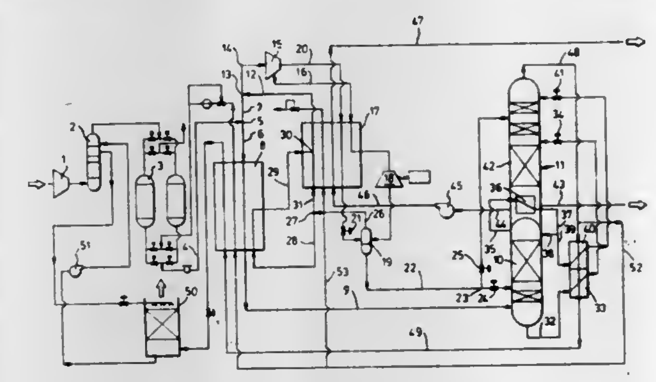

1. A method for producing gaseous oxygen which method comprises compressing feed air to between 5 and 10 bars absolute, passing said feed air through a molecular sieve adsorber to remove carbon dioxide and water vapour therefrom, fractionating the feed air in a distillation unit comprising a high pressure column operating at between 5 and 9 bars absolute and a low pressure column operating at between 1.3 and 3 bars absolute, withdrawing liquid oxygen from said low pressure column, pressurizing said liquid oxygen, vaporizing said liquid oxygen and warming the vapour, characterised in that said feed air from said molecular sieve adsorber is divided into a first stream (6), which is cooled by heat exchange against process streams and passed to the high pressure column as feed, and a second stream (7) which is compressed to an elevated pressure in a recycle compressor and is divided into a first sub-stream and a second sub-stream, said first sub-stream is cooled by said liquid oxygen and expanded to produce (on a molar basis) a mainly liquid stream which is phase separated, in which the liquid phase is introduced into said high pressure column and/or said low pressure column, and said second sub-stream is cooled, expanded in an expander, phase separated, used to assist in cooling said first sub-stream and returned, at least in part, to said recycle compressor.

4,372,765
AIR LIQUEFACTION AND SEPARATION PROCESS AND EQUIPMENT
Shoichi Tamura, Kobe; Takayoshi Asami, Ohtsu, and Hidekazu Sonoi, Kobe, all of Japan, assignors to Kabushiki Kaisha Kobe Seiko Sho, Kobe, Japan
Filed Feb. 26, 1981, Ser. No. 238,206
Claims priority, application Japan, Feb. 26, 1980, 55-23813
Int. Cl.³ F25J ***3/04***
U.S. Cl. 62—29 **3 Claims**

1. A method for liquefying and separating air through the use of a high pressure rectifying tower having lower, intermediate and upper heat transfer regions, a low pressure rectifying tower having lower, intermediate and upper heat transfer regions, a first evaporator disposed within said lower heat transfer region of said low pressure rectifying tower, a second evaporator disposed within said intermediate heat transfer region of said lower pressure rectifying tower, nitrogen gas and liquid nitrogen disposed within said upper heat transfer region of said high pressure rectifying tower and said low pressure rectifying tower, liquid oxygen contacting said first evaporator, liquid nitrogen contacting said second evaporator, and liquid air containing high density oxygen disposed within said lower heat transfer region of said high pressure reactifying tower, wherein said method comprises:
- introducing source air into said lower heat transfer region of said high pressure rectifying tower;
- channeling said source air upwards through said high pressure rectifying tower to form partially rectified air;
- circulating said liquid nitrogen within said upper heat transfer region of said high pressure rectifying tower downwards so as to contact said source air throughout said high pressure rectifying tower such that said source air is separated to form said nitrogen gas disposed within said upper heat transfer region of said high pressure rectifying tower and said liquid air containing high density oxygen disposed within said lower heat transfer region of said high pressure rectifying tower;
- channeling said liquid air within said lower heat transfer region of said high pressure rectifying tower to said intermediate heat transfer region of said low pressure rectifying tower;

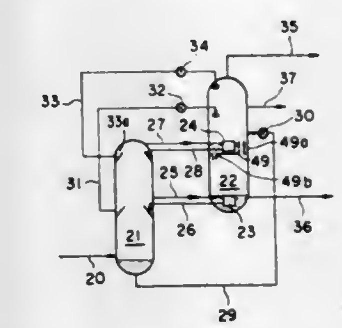

- rectifying and separating said liquid air within said intermediate heat transfer region of said low pressure rectifying tower into said nitrogen gas within said upper heat transfer region of said low pressure rectifying tower and into said liquid oxygen contacting said first evaporator within said lower heat transfer region of said low pressure rectifying tower;
- communicating said partially rectified air from said intermediate heat transfer region of said high pressure rectifying tower with said first evaporator;
- evaporating said liquid oxygen contacting said first evaporator with said source air;
- condensing a portion of said source air within said first evaporator to form a first condensed air portion;
- supplying a first part of said first condensed air portion to said intermediate heat transfer region of said high pressure rectifying tower;
- supplying a second part of said first condensed air portion of said intermediate heat transfer region of said low pressure tower;
- channeling said nitrogen gas, which has not traversed said first evaporator, within said upper heat transfer region of said high pressure rectifying tower into said second evaporator such that said first evaporator and said second evaporator are disposed within parallel flow paths;
- condensing said nitrogen gas within said second evaporator to form liquid nitrogen;
- channeling a first part of said liquid nitrogen within said second evaporator to said upper heat transfer region of said high pressure rectifying tower; and channeling a second part of said liquid nitrogen within said second

evaporator to said upper heat transfer region of said low pressure rectifying tower.

4,372,766

APPARATUS AND METHOD FOR CONCENTRATING A LIQUID MIXTURE BY FREEZING THE SOLVENT

John S. Andrepont, Downers Grove, Ill., assignor to Chicago Bridge & Iron Company, Oak Brook, Ill.

Filed Nov. 16, 1981, Ser. No. 321,463

Int. Cl.[3] B01D *9/02*

U.S. Cl. 62—532 **13 Claims**

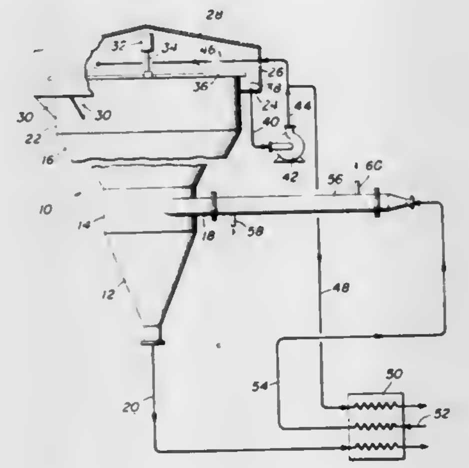

1. A freeze concentration method of separating a liquid from a liquid mixture containing a dissolved material, said liquid being less dense in solid form than in liquid form, comprising:
cooling the liquid mixture containing the dissolved material to form crystals of the liquid;
tangentially feeding the cold liquid mixture containing crystals of the liquid into the intermediate shell portion interior of a vertical vessel having a lower downwardly pointed conical shell portion, an intermediate shell portion and an upper shell portion wider than the lower and intermediate portions and with all said vessel portions surrounding and defining an unobstructed interior, so that the liquid flows in a helical path therein and then flows downwardly to and in the lower conical portion whereby a less dense liquid slurry of the crystals accumulates in the central area of the lower conical portion and flows upwardly into the vessel upper portion while a more dense liquid slurry of the crystals accumulates in the vessel lower conical portion;
withdrawing the more dense liquid slurry from the vessel lower conical portion;
collecting the less dense liquid slurry in the vessel upper portion; and
removing the crystals from the vessel upper portion.

4,372,767

METHOD OF MANUFACTURING OPTICAL FIBERS

Mokhtar S. Maklad, Milford, Conn., assignor to EOTec Corporation, West Haven, Conn.

Filed Oct. 19, 1981, Ser. No. 312,539

Int. Cl.[3] C03B *37/025, 37/075*

U.S. Cl. 65—3.12 **8 Claims**

1. A process for making an optical fiber having a glass core enveloped by a glass cladding of lower index of refraction comprising, inserting a rod of the desired core glass composition into a tube made of the desired cladding composition with the rod in line contact with the inner surface of said tube, the glass transition temperature of said core glass composition being substantially lower than the glass transition temperature of said cladding composition, applying heat to said tube and rod at a temperature such that at least the lowermost portion of said rod melts and forms a film which wets the inner surface of the tube while the tube is still solid, permitting the film of melted core glass to form a melt pool at the bottom of said

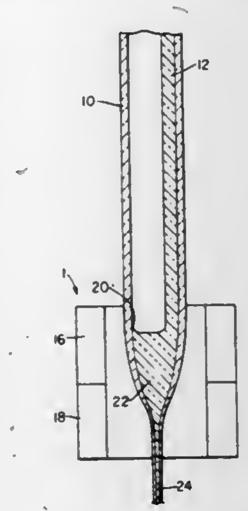

tube, and drawing said melt pool and tube into said optical fiber.

4,372,768

METHOD OF SPLICING ENDS OF OPTICAL FIBERS

Joseph Zucker, Foster City, and Arthur H. Fitch, Redwood City, both of Calif., assignors to GTE Automatic Electric Laboratories, Inc., Northlake, Ill.

Filed Apr. 27, 1981, Ser. No. 257,696

Int. Cl.[3] C03B *23/20;* **G02B** *5/14*

U.S. Cl. 65—4.21 **13 Claims**

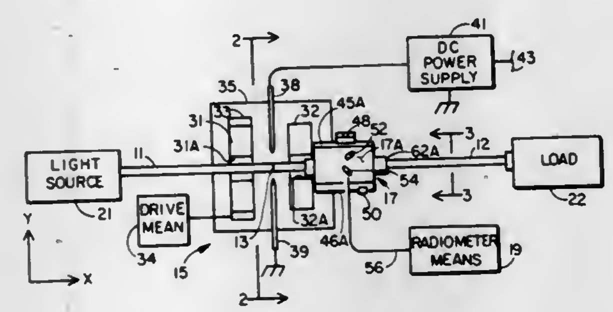

1. A method of splicing adjacent one ends of first and second optical fibers together comprising the steps of:
passing light in the first fiber in the direction of the one end thereof,
detecting light radiated from the perimeter of the second fiber in a length thereof that is proximate its one end and that supports substantial leaky mode light waves, and
adjusting the relative position of the one ends of the fibers for nulling the detected signal prior to operating on them for effectuating a splice therebetween.

4,372,769

MULTI-FIBER FIBER-OPTIC ASSEMBLY METHOD

John W. Hicks, Jr., P.O. Box 345, Southbridge, Mass. 01550

Filed Jul. 20, 1981, Ser. No. 285,198

Int. Cl.[3] C03B *37/14*

U.S. Cl. 65—4.21 **2 Claims**

1. A method for assembling multi-fiber fiber optic devices in connection with an oven mold defining an opening and a piston surface for insertion to and withdrawal from said opening, comprising the steps of: assembling a single layer of multi-fibers upon said surface, heating the oven to a point where said layer will adhere within said mold, moving the surface into said mold, and withdrawing said surface without said layer before said layer adheres to said surface.

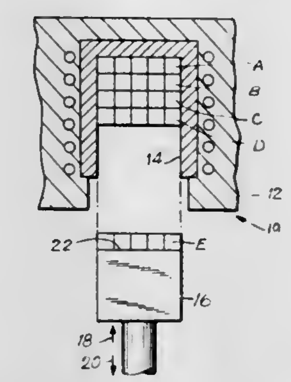

2. The invention according to claim 1, wherein the additional step of thereafter providing another layer of multi-fibers upon said surface and repeating the other steps is provided.

4,372,770

MELTING GLASS WITH TWO STAGE NO_x CONTROL

John F. Krumwiede, Blawnox, Pa., and Alan G. Amrhein, Fresno, Calif., assignors to PPG Industries, Inc., Pittsburgh, Pa.

Filed Jul. 31, 1981, Ser. No. 288,843

Int. Cl.[3] C03B *5/16*

U.S. Cl. 65—27 **10 Claims**

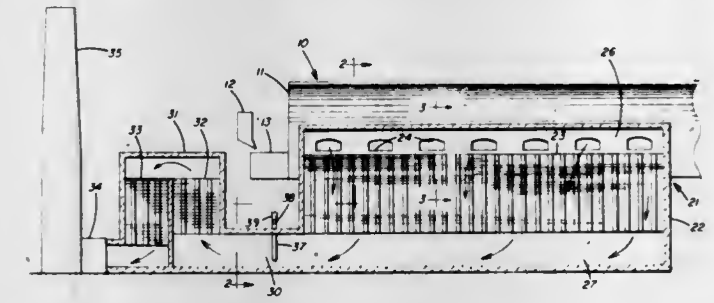

1. A method for controlling NO_x emissions from a process furnace in which combustion of fuel produces an exhaust gas stream including NO_x compounds, and the exhaust gas stream passes away from the furnace through passages in which exhaust gas temperatures upon entering the passages are above 1420° C. and the exhaust gas temperatures fall during passage through the passages, and the exhaust gas temperature in downstream portions of the passages fluctuate with time within and outside the range 700° C. to 1090° C., comprising injecting ammonia into the exhaust gas stream at a downstream portion of the passages when the exhaust gas temperature there is from 700° C. to 1090° C. so as to reduce NO_x compounds, and when the exhaust gas temperature at the ammonia injection location is outside the range of 700° C. to 1090° C. injecting fuel into an upstream portion of the passages at which the exhaust gas temperature is at least 1420° C. so as to consume oxygen by combustion of the injected fuel.

4,372,771

METHODS AND APPARATUS FOR EXTRUDING ARTICLES

Alexander Coucoulas, Bridgewater Township, Somerset County, and John R. Nis, Hamilton Township, Mercer County, both of N.J., assignors to Western Electric Company, Inc., New York, N.Y.

Filed Apr. 2, 1981, Ser. No. 250,466

Int. Cl.[3] C03B *5/16, 37/025*

U.S. Cl. 65—75 **6 Claims**

1. A method of extruding tubing from a glass melt, which comprises the steps of:
applying a gas pressure head, within a chamber containing the melt, to urge portions of said melt through an annular orifice in said chamber to form the glass tubing; while

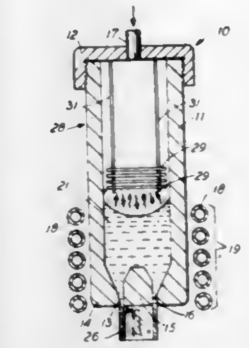

simultaneously shielding the surface of the melt with a shield that is located in close, spaced relation to the melt and the inside surface of the chamber wall to prevent any substantial evaporative loss from the melt.

4,372,772

PARABOLIC REFLECTOR COMPRISING A PLURALITY OF TRIANGULAR REFLECTING MEMBERS FORMING A REFLECTING SURFACE SUPPORTED BY A FRAMEWORK HAVING A PARTICULAR GEOMETRIC PATTERN

Douglas E. Wood, Box 32, Fox Island, Wash. 98333

Division of Ser. No. 70,914, Aug. 29, 1979, Pat. No. 4,295,709. This application Jun. 11, 1981, Ser. No. 272,576

Int. Cl.[3] C03B *23/023*

U.S. Cl. 65—106 **6 Claims**

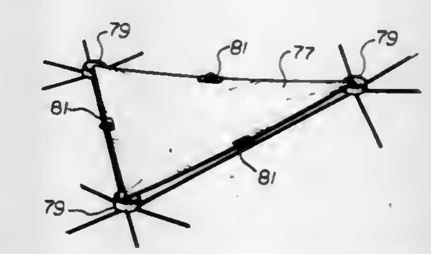

1. A system for curving plane sections of glass having front and back surfaces, wherein the plane sections are first configured such that they have a triangular outline, the resulting triangular sections including vertices and edges extending between the vertices, the system further comprising:
a. means for supporting the triangular sections at each vertex thereof such that the respective vertices tend to remain in their respective positions;
b. means positioned in the vicinity of each edge of the triangular sections for forcing each edge to curve between its respective vertices, which results in the front and back surfaces of the triangular sections defining a compound curve.

5. A method for curving plane sections of glass having front and back surfaces, said method comprising the steps of:
a. configuring the plane sections of glass such that they have a triangular outline, wherein the resulting triangular sections include vertices and edges extending between said vertices;
b. supporting said triangular sections at each vertex thereof so that the respective vertices tend to remain in their respective positions; and
c. forcing each edge of said triangular section to curve between its respective vertices, which results in the front and back surfaces of the triangular sections defining a compound curve.

4,372,773

METHOD FOR MAKING INK JET WRITING DEVICES

Laszlo Halasz, Brecksville, Ohio, assignor to Gould Inc., Rolling Meadows, Ill.

Filed May 23, 1979, Ser. No. 41,841

Int. Cl.³ C03B *23/08*

U.S. Cl. 65—108 **3 Claims**

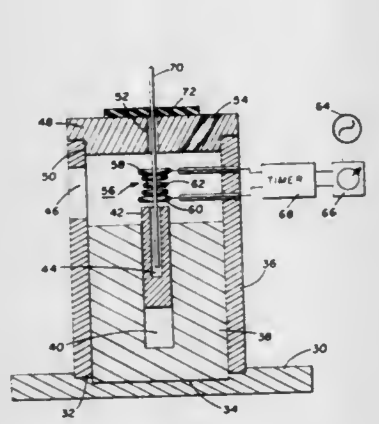

1. A method for forming nozzles or orifices in capillary glass tubing, comprising the steps of;

supporting a predetermined length of said tubing in an essentially vertical orientation;

heating said tubing at an intermediate location therealong until its walls soften and said tubing elongates downwardly due to gravity;

stopping elongation of said tubing upon movement of the lower end thereof through a predetermined distance;

cutting said tubing in the region of elongation to form two capillary tubes having smoothly converging nozzles;

supporting one of said two capillary tubes previously provided with a smoothly converging nozzle, in an essentially vertical position;

heating said one capillary tube at an intermediate location therealong until its walls soften and said one capillary tube elongates downwardly due to gravity; and

stopping elongation of said one capillary tube upon movement of the lower end thereof through a predetermined distance;

whereby a capillary tube having a converging-diverging inlet orifice and a smoothly converging outlet nozzle is formed.

3. A method for forming nozzles or orifices in capillary glass tubing, comprising the steps of:

supporting a predetermined length of said tubing in an essentially vertical orientation;

heating said tubing at an intermediate location therealong until its walls soften and said tubing elongates downwardly due to gravity;

stopping elongation of said tubing upon movement of the lower end thereof through a predetermined distance;

cutting said tubing in the region of elongation to form two capillary tubes having smoothly converging nozzles; and

moving the lower end of said tubing laterally while its walls are soft, to form, following said cutting, two capillary tubes having bent or deflected outlet nozzles.

4,372,774

THERMAL TREATMENT OF GLASS

Raymond P. Cross, Preston, and Gordon T. Simpkin, Ormskirk, both of England, assignors to Pilkington Brothers Limited, St. Helens, England

Continuation of Ser. No. 136,750, Apr. 2, 1980, abandoned, and a continuation-in-part of Ser. No. 24,988, Mar. 29, 1979, abandoned, and a continuation of Ser. No. 934,727, Aug. 21, 1978, abandoned. This application Jul. 21, 1981, Ser. No. 285,447

Claims priority, application United Kingdom, Aug. 17, 1978, 33575/78

Int. Cl.³ C03B *27/00*

U.S. Cl. 65—114 **30 Claims**

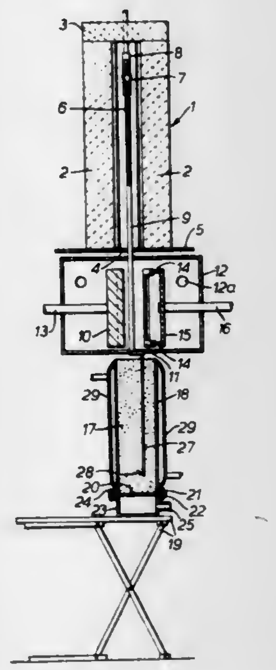

1. A method of thermally toughening glass comprising:

heating the glass to a temperature above its strain point;

chilling the hot glass by contact with a gas-fluidised particulate material which comprises a mixture in predetermined proportions of a number of selected particulate materials, at least one of which has gas-generating properties;

selecting the gas-generating particulate material from the group consisting of γ-alumina, aluminum trihydrate, aluminum monohydrate, aluminosilicate and sodium bicarbonate; and

mixing said selected particulate materials in predetermined proportions which are tailored to impart to the mixture a thermal capacity per unit volume at minimum fluidisation in the range 1.02 to 1.73 MJ/m^3K and a flowability in the range 60 to 86.

4,372,775

INHIBITION OF MICROBIOLOGICAL GROWTH WITH THIAZINE QUATERNARY AMMONIUM SALTS OF POLYEPIHALOHYDRIN

Patrick M. Quinlan, Webster Groves, Mo., assignor to Petrolite Corporation, St. Louis, Mo.

Division of Ser. No. 32,036, Apr. 23, 1979, Pat. No. 4,316,007. This application Jun. 9, 1981, Ser. No. 271,895

Int. Cl.³ A01N *43/02, 43/84*

U.S. Cl. 71—67 **9 Claims**

1. A process of inhibiting microbiological growth which comprises treating a hydrocarbon or aqueous system with a microbiocidally effective amount of a thiazine quaternary ammonium salt of polyepihalohydrin wherein the nitrogen atom of the thiazine moiety is attached to the polymeric chain through a $—CH_2—$ group.

4,372,776

COMPOUNDS FOR THE LOOSENING OF FRUIT AND/OR LEAVES ON PLANTS

Janet A. Day, Sittingbourne, and Robert J. G. Searle, Rodmersham Green near Sittingbourne, both of England, assignors to Shell Oil Company, Houston, Tex.

Filed Oct. 16, 1981, Ser. No. 312,039

Claims priority, application United Kingdom, Nov. 5, 1980, 8035442

Int. Cl.³ A01N *43/10, 53/00;* C07C *69/74, 121/78*

U.S. Cl. 71—90 **2 Claims**

1. A compound of the formula

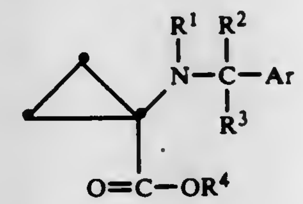

wherein R^1 and R^3 each is hydrogen or together form a second carbon-to-nitrogen bond, R^2 is hydrogen or cyano, R^4 is alkyl of one to three carbon atoms, and Ar is thienyl, furyl, or phenyl optionally substituted by one or more of halogen, cyano, nitro, hydroxy, alkyl or alkoxy.

2. A method for loosening fruit and/or leaves on a plant, comprising applying to the plant or part thereof an effective amount of a compound of claim 1.

4,372,777

FLOWABLE HERBICIDES

Francis J. LeClair, Webster Groves, and John M. Surgant, Clayton, both of Mo., assignors to Monsanto Company, St. Louis, Mo.

Continuation of Ser. No. 102,182, Dec. 10, 1979, abandoned, which is a continuation-in-part of Ser. No. 957,125, Nov. 3, 1978, abandoned. This application Jan. 8, 1981, Ser. No. 223,508

Int. Cl.³ A01N *25/02, 25/00*

U.S. Cl. 71—93 **8 Claims**

1. Flowable solid herbicides having the following composition by weight:

(a) from 25% to 50% of propachlor herbicide;

(b) from 0 to 15% of atrazine;

(c) an emulsificer/suspension system comprising:

(i)	hydrated amorphous silicon dioxide,	2-8%
(ii)	polyoxypropylene/polyoxyethylene block copolymer, having an average mol. wt. of 6500,	2-8%
(iii)	alkyl phenoxy polyoxyethylene ethanol, and	0-5%
(iv)	hydrated aluminum silicate	0.5-2%
(d)	an inert, low-freezing point polyglycol solvent compatible with components (c) (i)-(iv)	5-15%
(e)	flocculent	0-3%
(f)	defoamer, and	0-0.1%
(g)	water,	30-70%

the solid components of said composition having a particle size no greater than about 25 microns.

4,372,778

HERBICIDAL N-(PYRIDINYLAMINOCARBONYL)BENZENESULFONAMIDES

George Levitt, Wilmington, Del., assignor to E. I. Du Pont de Nemours and Company, Wilmington, Del.

Division of Ser. No. 192,034, Sep. 29, 1980, Pat. No. 4,293,330, Continuation-in-part of Ser. No. 82,522, Jun. 9, 1979, abandoned. This application May 29, 1981, Ser. No. 268,196

Int. Cl.³ C07D *213/28, 401/12, 409/12;* A01N *43/40*

U.S. Cl. 71—94 **12 Claims**

1. A compound of the formula:

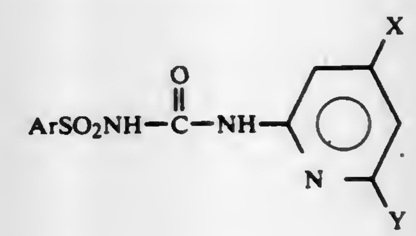

wherein

X is $CH_3—$, $CH_3CH_2—$ or CH_3O;

Y is $CH_3—$, $CH_3CH_2—$, $CH_3O—$, $CH_3CH_2O—$, Cl, Br or F;

Ar is

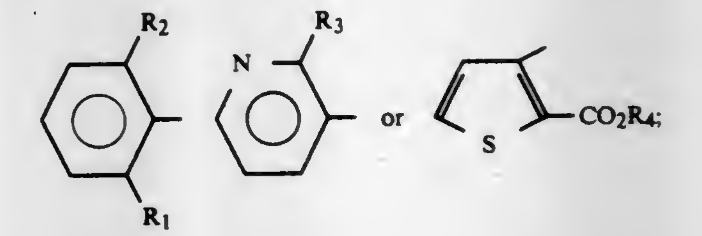

R_1 is $R_5SO_2—$ or $R_6R_7NSO_2—$;

R_2 is H, Cl or CH_3;

R_3 is Cl;

R_4 is C_1-C_4 alkyl, C_3-C_4 alkenyl, $ClCH_2CH_2—$ or $CH_3OCH_2CH_2—$;

R_5 is C_1-C_4 alkyl;

R_6 and R_7 are independently $CH_3—$ or $CH_3CH_2—$.

9. A method for controlling the growth of undesired vegetation which comprises applying to the locus to be protected an effective amount of a compound of claim 1.

4,372,779

IRON ORE PELLETS CONTAINING COARSE ORE PARTICLES

Takeshi Sugiyama; Shoji Shirouchi; Osamu Tsuchiya, all of Kobe; Mamoru Onoda, Miki; Atsuko Yamashita, Kobe; Isao Fujita, Kobe, and Nobuyuki Imanishi, Kobe, all of Japan, assignors to Kobe Steel, Ltd., Kobe, Japan

Filed Oct. 7, 1980, Ser. No. 194,842

Int. Cl.³ C22B *1/14*

U.S. Cl. 75—0.5 R **3 Claims**

1. Iron ore pellets containing coarse iron ore particles, said pellets comprising iron ore powder having a particle size distribution consisting of 25-40 wt.% of coarse ore particles greater than 0.1 mm in diameter, less than 20 wt.% of particles greater than 1 mm in diameter; less than 21 wt. % of medium ore particles of 0.1-0.04 mm in diameter; and more than 39 wt.% of fine ore particles smaller than 0.04 mm in diameter; wherein

the basicity (CaO/SiO_2) of the total amount of said fine and medium ore particles is greater than 1.0 and the gangue mineral

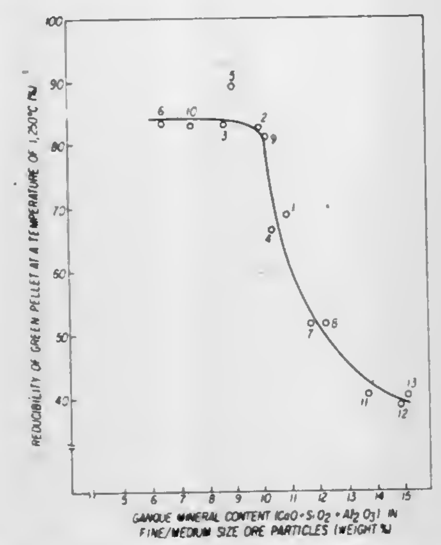

content ($CaO+SiO_2+Al_2O_3$) in the total amount of said fine and medium ore particles is less than 10 wt.%.

4,372,780

PROCESS FOR RECOVERY OF METALS CONTAINED IN PLOMBIFEROUS AND/OR ZINCIFEROUS OXIDE COMPOUNDS

Bertrand Madelin, 1, avenue Albert Einstein, 78190 Trappes, France

Continuation of Ser. No. 57,171, Jul. 13, 1979, abandoned. This application Oct. 8, 1980, Ser. No. 195,304

Claims priority, application France, Jul. 13, 1978, 78 20933

Int. Cl.³ C22B *4/04, 7/02, 13/02, 19/04*

U.S. Cl. 75—14 **23 Claims**

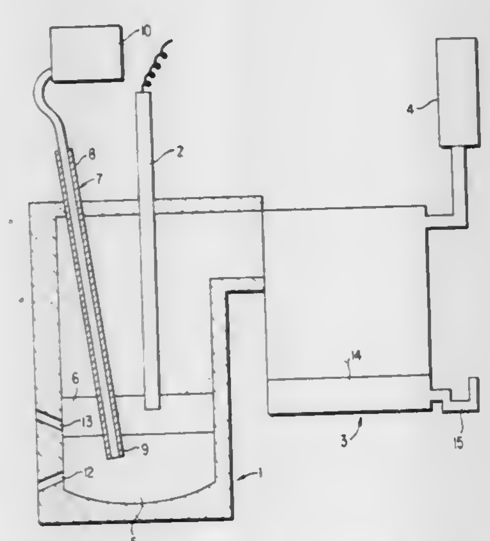

1. Process for the recovery of lead and zinc contained in oxidized lead and zinc products, comprising injecting said products, after drying, into a bath of molten pig iron having a temperature below about 1500° C. and condensing the released gasses thus allowing the lead and zinc to be recovered in metallic form.

4,372,781

METHOD AND APPARATUS FOR TREATING EUTECTIC AND EUTECTOID COMPOSITIONS

Ermano Bo, Chemin de Monte-Ferrand Ternay, St Symphorien d'Ozon, France (69360), and Tadeusz G. Mathia, Allee des Chenes, Charbonnieres-les-Bains, France (69620)

Filed Nov. 14, 1980, Ser. No. 206,951

Claims priority, application France, Feb. 26, 1980, 80 04496

Int. Cl.³ C22C *1/02*

U.S. Cl. 75—65 ZM **20 Claims**

1. A process for the preparation of anisotropic metallic compositions which is adapted to achieve floating zone melting of eutectics and orientation of eutectoids as well as melting, frittering, or homogenization of a composition prior to orientation, said process comprising:

(a) solidifying a eutectic by providing a temperature gradient and simultaneously displacing the solidification front of said eutectic along the direction of said gradient, so that a solid eutectic is obtained having a fibrous or lamellar structure oriented along a predetermined growth direction;

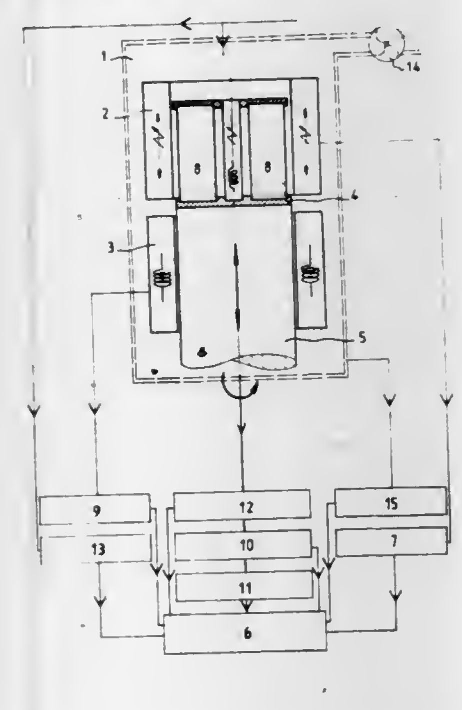

(b) imposing a direction of growth on said eutectic so as to orient said eutectic;

(c) preparing said eutectic by placing it within a container and treating the surface of said eutectic in a gaseous atmosphere within said container; and

(d) compacting said eutectic by moving said eutectic.

4,372,782

RECOVERY OF LEAD AND SILVER FROM MINERALS AND PROCESS RESIDUES

Robert S. Salter; Roy S. Boorman, and Ross D. Gilders, all of Fredericton, Canada, assignors to Provincial Holdings Ltd., Fredericton, Canada

Filed May 20, 1981, Ser. No. 265,268

Claims priority, application Japan, Oct. 9, 1979, 54-130536

Int. Cl.³ C01G *21/22;* **C22B** *7/00, 13/00, 11/00*

U.S. Cl. 75—118 R **46 Claims**

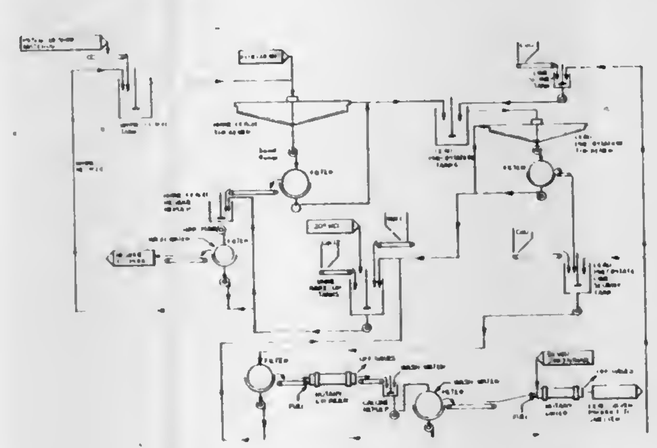

2. In a process for gaining lead and silver values comprising the steps of (1) preparing a solution of lead chloride and silver compounds by dissolving lead sulphate and silver compounds contained in an ore or process residue in an acidic, concentrated chloride brine; (2) separating the solution so formed from insoluble gangue or other residue; (3) forming a precipitate of lead oxychloride and silver compounds by adding lime to said solution and separating said precipitate from the residual lean brine solution for recycling said lean brine for reuse in the further extraction of lead sulphate as under steps (1) and (2); the improvement which comprises (5) reacting the said oxychloride precipitate with oxygen and lime in a reactor at a temperature above 325° C. for longer than one half hour to produce a calcine containing most of the lead as calcium plumbates and/or lead oxides and most of the silver as silver or silver compounds; (6) repulping said calcine in water and/or dilute chloride brine to dissolve soluble chlorides; (7) separating the residue obtained in step (6) from the resulting chloride brine; (8) recycling the brine resulting from (7) for reuse in the further extraction of lead sulphate as under steps (1) and (2); (9) washing said residue containing calcium plumbates and/or lead oxides, as well as silver and silver compounds resulting from step (7) with fresh water to remove residual chlorides; and (10) recycling the chloride brine obtained in step (9) to step (6) and/or recycling the said chloride brine for reuse in the further extraction of lead sulphate as under steps (1) and (2).

27. A process according to claim 2 wherein silver is recovered by cementation on one of metallic zinc, iron, or lead between step (2) and step (3).

4,372,783

ELECTRICAL CONTACT COMPOSITION FOR A VACUUM TYPE CIRCUIT INTERRUPTER

Masaru Kato, Amagasaki, Japan, assignor to Mitsubishi Denki Kabushiki Kaisha, Tokyo, Japan

Filed Jul. 25, 1980, Ser. No. 172,484

Claims priority, application Japan, Jul. 27, 1979, 54-96468

Int. Cl.³ B22F *3/00*

U.S. Cl. 75—246 **7 Claims**

1. In an electrical contact for a vacuum type circuit interrupter comprising a principal phase material selected from a group consisting of chromium copper solid solution, iron copper solid solution, cobalt copper solid solution, and copper; and a second phase material selected from a group consisting of chromium, iron and cobalt and dispersed into the principal phase material, the improvement characterized by: the particle diameter of the second phase material being in a range of from 74 μm to 250 μm.

4,372,784

METHOD FOR HEAT TREATING PULVEROUS RAW MATERIAL CALCINING COMBUSTOR THEREFOR

Paul D. Hess, Brookfield, Wis., assignor to Allis-Chalmers Corporation, Milwaukee, Wis.

Filed Aug. 21, 1981, Ser. No. 295,218

Int. Cl.³ C04B *7/02;* **F27B** *15/00, 7/02*

U.S. Cl. 106—100 **22 Claims**

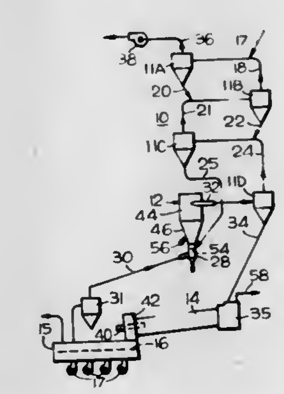

19. A method of heat treating cement raw meal in an upright calcining combustor vessel of a rotary kiln cement manufacturing plant having a cooler for clinker from the kiln comprising:

feeding combustion air from said cooler which is not admixed with waste gases from said kiln into the lower portion of said vessel and simultaneously withdrawing gas in a tangential, outwardly spiraling direction from adjacent the top of said vessel to create upwardly swirling flow of said combustion air within said vessel,

directing said cement meal into said rising combustion air within said lower portion of said vessel at a point downstream from the combustion air inlet so that said meal is entrained in said rising combustion air,

injecting fuel into the upwardly rising air/meal stream at a point within said vessel downstream from entrance of said meal and burning said fuel with said combustion air to calcine said meal, whereby the endothermic reaction of calcining said cement meal limits temperature rise within said vessel resulting from burning said fuel with said combustion air, and

decreasing the velocity of the upwardly swirling combustion air/meal stream at a point downstream from injection of fuel to thereby increase the residence time thereof within said vessel for calcination of said meal.

4,372,785

SUSPENSIONS AND GELS OF INDICAN AND THEIR USES

Christopher J. Lawson, Reading, and Kenneth C. Symes, Wokingham, both of England, assignors to Talres Development (N.A.) N.V., Netherlands Antilles

Division of Ser. No. 126,311, Feb. 29, 1980, Pat. No. 4,338,432. This application Mar. 3, 1982, Ser. No. 354,210

Claims priority, application United Kingdom, Mar. 6, 1979, 7907786

Int. Cl.³ C08L *1/08, 5/00*

U.S. Cl. 106—170 **14 Claims**

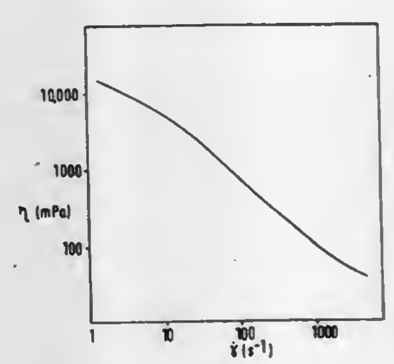

1. A method of modifying the viscosity of a liquid by incorporating therein an effective amount of indican, a polysaccharide comprising (1→3) glucose, (1→4) mannose, (1→4) rhamnose and (1→3 or 4) -O-(1-carboxyethyl)- rhamnose units in a molar ratio of about 2:1:1-2:1 respectively, containing 12–15% by weight acetyl units, $[\alpha]_D^{20}$ about −61°, having principle absorption bands in the infra red band at 3390, 1735, 1615, 1375, 1250 and 1050 cm^{-1}, a solubility of at least 1% by weight in methanol and in ethylene glycol, and an inherent viscosity of about 33.5 dl/g.

4,372,786

STABILIZING CLAY SOIL WITH CHEMICAL SOLUTIONS

Marion G. Reed, Hacienda Height; Tor Loken, and Odd R. Bryhn, both of Oslo, Norway, assignors to Chevron Research Company, San Francisco, Calif.

Filed Jul. 9, 1981, Ser. No. 281,799

Int. Cl.³ C09K *3/00*

U.S. Cl. 106—900 **10 Claims**

1. A method of stabilizing quick clay and salt clay soil comprising admixing the quick clay and salt clay soil with an effective amount of a solution of chemicals comprising hydroxy-aluminum and a chemical selected from the group con-

sisting of potassium chloride, potassium nitrate, potassium sulfate, ammonium chloride, ammonium nitrate, and ammo-

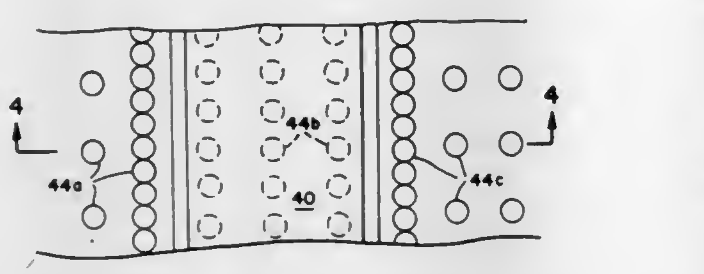

nium sulfate, said solution having a concentration of at least 4 molar.

4,372,787
METHOD FOR ULTRASONIC CLEANING OF RADIATORS
John T. Fields, and Cecil D. Lee, both of 810 E. 6th St., Tulsa, Okla. 74120
Filed Jul. 6, 1981, Ser. No. 280,908
Int. Cl.³ B08B *3/12*
U.S. Cl. 134—1 **3 Claims**

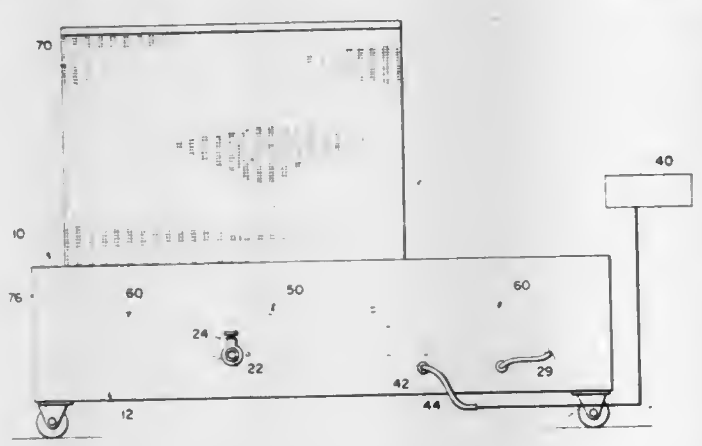

1. A method of cleaning a radiator having a header portion supporting heat exchanger tubes and comprising the steps of:
(a) heating a reservoir of cleaning liquid;
(b) impressing ultrasonic energy into the cleaning liquid with at least one ultrasonic energy producing means at an energy sufficient to cause cavitation of the cleaning liquid;
(c) supporting said radiator in the reservoir so that the header portion is immersed in the cavitated cleaning liquid and disposed in spaced relationship with the ultrasonic energy producing means;
(d) orienting the header portion in the cleaning liquid in a direction toward the ultrasonic energy producing means whereby the header is in closer proximity to the ultrasonic energy producing means than the remaining portions of the radiator; and
(e) maintaining the header portion of the radiator in the cavitated cleaning liquid for a time sufficient to effect cleaning thereof.

4,372,788
GRILL AND OVEN CLEANER
Albert J. Lancz, East Brunswick, N.J., assignor to Colgate-Palmolive Company, New York, N.Y.
Filed Aug. 17, 1981, Ser. No. 293,736
Int. Cl.³ B08B *3/10*
U.S. Cl. 134—4 **4 Claims**

1. The method of cleaning soiled grill and oven surfaces comprising coating the soiled surfaces at room temperature with a composition comprising from 1 to 20% by weight of monoethanol amine, from 0.01 to 2.0% by weight of nonionic or anionic surfactant, from 0.1 to 2.5% by weight of a polyol polyether thickening agent, and sulfuric acid in a sufficient amount such that the composition has a pH less than about 10.5, heating the coated surfaces to loosen the soiling material, and rinsing the loosened soiling material away.

4,372,789
DIRECTIONALLY STRENGTHENED COPPER ALLOY PARTS FOR A GAS TURBINE
Joseph J. Jackson, Westchester, Ohio, assignor to General Electric Company, Schenectady, N.Y.
Filed Aug. 7, 1980, Ser. No. 176,191
Int. Cl.³ C22F *1/08*
U.S. Cl. 148—3 **10 Claims**

1. A directionally strengthened part for a gas turbine, which part is composed of a precipitation strengthened copper-based alloy having high thermal conductivity and a crystalline grain structure characterized by elongated grain boundaries parallel to the direction of principal stress applied to such part when in turbine service and by substantially no grain boundaries transverse thereto.

4,372,790
METHOD AND APPARATUS FOR THE CONTROL OF THE CARBON LEVEL OF A GAS MIXTURE REACTING IN A FURNACE CHAMBER
Werner Göhring, Kleve, Fed. Rep. of Germany, and Cornelius H. Luiten, Nijmegen, Netherlands, assignors to Ipsen Industries International GmbH, Kleve, Fed. Rep. of Germany
Filed Mar. 19, 1979, Ser. No. 21,375
Claims priority, application Switzerland, Mar. 21, 1978, 3114/78
Int. Cl.³ C21D *1/48*
U.S. Cl. 148—16.5 **1 Claim**

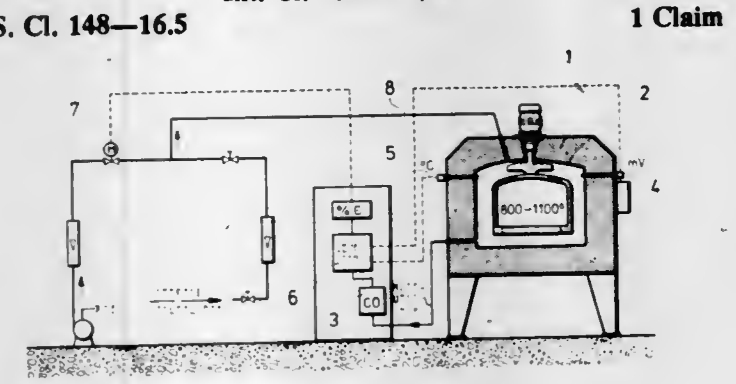

1. A method for control of the carbon level of a gas mixture reacting in a heat treatment furnace, comprising the steps of
introducing a fuel containing hydrocarbon as a combustion gas as well as air into a furnace chamber to form a gas mixture by feeding exclusively flow streams of the combustion gas and the air into the furnace chamber, respectively, with the reaction products of the gas mixture not being in a state of water-gas equilibrium and not in a state of methane gas equilibrium and which gas mixture contains an excess of methane so as to assure an adequate supply of carbon,
determining the controlled carbon level from measurement of the portion of the gas component CO which is present in the furnace chamber as a first measured value, from measurement of the electrical voltage of an oxygen-ion-conducting solid body electrolyte as a second measured value and from the furnace chamber temperature as a third measured value by feeding the three measured values to a computer and determining therein the carbon level from the three measured values, and
controlling the carbon level dependent on this determination by changing the quantity flow of the combustion gas and/or of the air introduced into the furnace chamber until correspondence of the determined carbon level with its desired value is produced.

4,372,791
METHOD FOR FABRICATING DH LASERS
Jaw J. Hsieh, Burlington, Mass., assignor to Massachusetts Institute of Technology, Cambridge, Mass.
Division of Ser. No. 34,116, Apr. 30, 1979, Pat. No. 4,287,485, which is a continuation of Ser. No. 816,402, Jul. 18, 1977, abandoned, which is a continuation-in-part of Ser. No. 758,733, Jan. 12, 1977, abandoned. This application Aug. 28, 1981, Ser. No. 297,195
Int. Cl.³ H01L *21/208*
U.S. Cl. 148—171 **4 Claims**

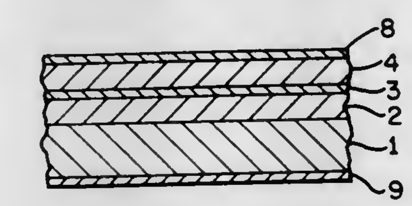

1. A method for fabricating a diode suitable for use in a double-heterostructure diode laser comprising depositing, in sequence, upon an InP substrate having a relatively smooth surface, an active layer of $Ga_xIn_{1-x}As_yP_{1-y}$ having a thickness of below about 0.5 μm and an InP barrier layer and thereafter applying ohmic contacts to said substrate and said barrier layer.

4,372,792
MANUFACTURE OF A FLEXIBLE STRANDED OPTICAL FIBER BODY
Philip Dey, New Barnet; Bernard Gaylard, Hale, and David A. Taylor, Kenton, all of England, assignors to BICC Limited, London, England
Filed Oct. 15, 1981, Ser. No. 311,558
Int. Cl.³ H01B *13/06;* G02B *5/16*
U.S. Cl. 156—48 **19 Claims**

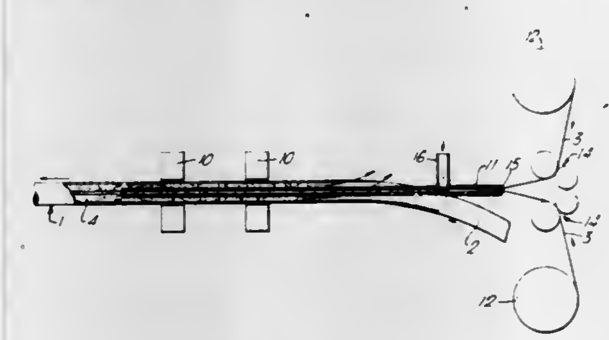

1. A method of manufacturing a flexible stranded body comprising a substantially circumferentially rigid central core of metal or metal alloy having an elongate compartment within and extending throughout the length of the core, at least one optical fibre loosely housed in, and of a length substantially greater than that of, the elongate compartment, and, surrounding the central core, at least one layer of helically wound bare elongate elements of metal or metal alloy, which method comprises causing a preformed elongate member of metal or metal alloy of approximately U-shaped transverse cross-section to travel in the direction of its length; feeding into the space bounded by the U-shaped elongate member at least one optical fibre in such a way that the rate of advance of the fibre is restrained; transversely folding the advancing U-shaped elongate member in such a way as to form a substantially circumferentially rigid central core having a closed elongate compartment within and extending throughout the length of the core in which the advancing optical fibre is loosely housed; injecting water-impermeable medium of a grease-like nature into the elongate compartment under a controlled pressure, the consistency of the greasy water-impermeable medium, the pressure and rate at which it is injected into the compartment and the degree of restraint imparted to the advancing optical fibre being such that, in a predetermined length of the stranded body, the length of the optical fibre exceeds the length of the elongate compartment by a controlled extent and the space within the elongate compartment not occupied by the optical fibre is substantially filled with water-impermeable medium in a greasy state; and applying around the central core so formed at least one layer of helically wound bare elongate elements of metal or metal alloy.

4,372,793
METHOD OF JOINING FLEXIBLE FASTENER STRIPS TO FLEXIBLE WEB
Andre M. Herz, Nesles-la-Vallee, France, assignor to Minigrip, Inc., Orangeburg, N.Y.
Continuation of Ser. No. 737,141, Oct. 29, 1976, Pat. No. 4,341,575. This application Nov. 24, 1981, Ser. No. 324,582
Claims priority, application France, Nov. 3, 1975, 75 33593
Int. Cl.³ B30B *3/02;* B29D *7/02*
U.S. Cl. 156—66 **17 Claims**

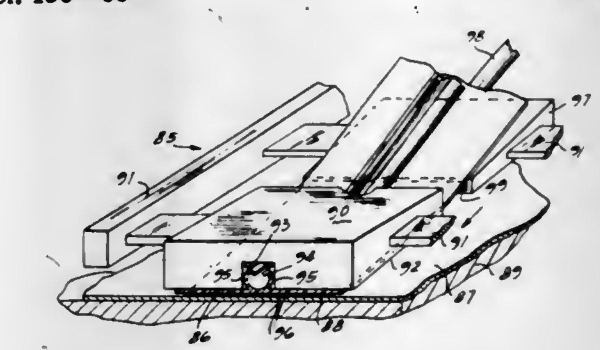

1. A method of attaching to a prefabricated flexible web a first prefabricated flexible separable plastic fastener strip having an interlocking profile projecting in a direction away from an oppositely facing interface surface area of the strip, and the profile being adapted for interlocking with a complementary second flexible separable fastener profile, comprising:
guiding the web and the fastener strip travelling at the same high speed and continuously in operation convergently toward one another and joining said interface surface area of the fastener strip to an interface surface area of said web;
utilizing said profile as guide means for guiding the fastener strip in movement into said convergence with said web;
continuously in operation applying a thin layer of quickly tacky adhesive to at least one of said interface surface areas as close as practicable to the convergent joining of the web and strip so that the adhesive will reach the joining while tacky, and effecting said applying of the adhesive in a manner assuring that the adhesive will be adheringly effective on the interface area of the fastener strip directly back of and aligned with said profile;
and pressing said strip and said web together and thereby effecting attachment of said interface surface areas to one another by means of the adhesive layer while the web and fastener strip continue travelling jointly at said high speed.

4,372,794
PLASTIC PAR LAMP CONSTRUCTION
Irving Bradley, Novelty, and Vincent Vodicka, South Euclid, both of Ohio, assignors to General Electric Company, Schenectady, N.Y.
Division of Ser. No. 61,912, Jul. 30, 1979, Pat. No. 4,336,578. This application Jun. 18, 1981, Ser. No. 275,063
Int. Cl.³ B29C *27/08;* H01K *1/30*
U.S. Cl. 156—73.1 **4 Claims**

1. A method of assembling a prefocused light source mount to a plastic reflector member of a rectangular shaped reflector lamp, said reflector member having a parabolic cavity with one pair of opposing generally parallel sides and a second pair of shorter generally parallel sides to form said rectangular shape, receptacle means for a prefocused light source mount disposed on the rear side of said reflector member, and with said reflector member having a greater wall thickness in the apex region

of said parabolic cavity in a circular area commencing at the edge of the receptacle means and extending radially outward therefrom to avoid mechanical and heat deformation when the prefocused mount is sealed to said reflector member as well as during subsequent lamp operation, which comprises:

(a) assembling said light source mount to the receptacle means of said reflector member so that the light source is positioned at the focus of said reflector,

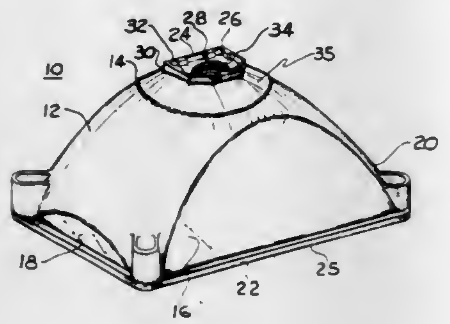

(b) mechanically securing the light source mount while the reflector member of said assembly is free to move,

and

(c) ultrasonically vibrating the reflector member until a leak-proof seal has been formed between abutting surfaces of the light source mount and the reflector member.

4,372,795

METHOD FOR THE MANUFACTURE OF A COUPLING OR CLUTCH ELEMENT

Klaus Brunsch, Weidach; Claus-Michael Herkert, Zorneding, and Dieter Thomamueller, Bruckmuehl, all of Fed. Rep. of Germany, assignors to Messerschmitt-Boelkow-Blohm Gesellschaft mit beschraenkter Haftung, Munich, Fed. Rep. of Germany

Filed Oct. 5, 1981, Ser. No. 308,776

Claims priority, application Fed. Rep. of Germany, Oct. 31, 1980, 3041064

Int. Cl.^{3} B32B *31/04*

U.S. Cl. 156—155 **7 Claims**

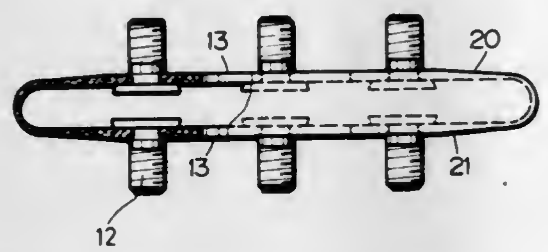

1. A method for manufacturing a fiber composite coupling element for interconnecting a driving member to a driven member, comprising the following steps: producing a central core of a low melting or dissolvable material, cutting sheets having predetermined sizes and configurations from preimpregnated fiber compound material having a given tackiness, forming layers of said sheets on said core by laminating said sheets onto said core with a predetermined fiber orientation in each layer relative to the next layer and in an overlapping relationship from sheet to sheet, said layers forming in combination a laminated assembly, incorporating connecting members (12) into the coupling element by contacting said connecting members with said sheets whereby the tackiness temporarily holds the connecting members in place, compressing the laminated assembly in a mold, curing the compressed assembly, whereby the curing bonds the sheets to one another and to said connecting members, removing the coupling element from the mold, and removing said central core from the finished coupling element without any additional machining.

4,372,796

METHOD AND APPARATUS FOR WRAPPING A TAPE AROUND A PIPE

Walter J. Greuel, Jr., Pleasanton, Calif., assignor to Raychem Corporation, Menlo Park, Calif.

Filed Aug. 10, 1981, Ser. No. 291,689

Int. Cl.^{3} B65H *81/00*

U.S. Cl. 156—187 **23 Claims**

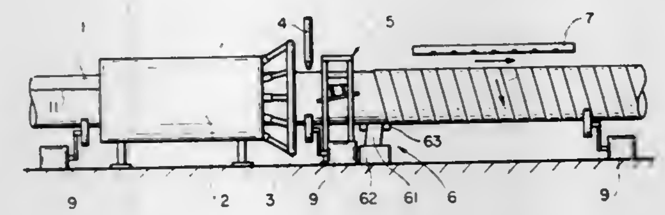

1. A method of providing a substantially void-free tape wrapping around a longitudinally welded metal pipe having a longitudinal weld bead protruding from the surface thereof, which method comprises:

(1) simultaneously advancing the pipe at a constant rate in its axial direction and rotating the pipe at a constant rate about its axis;

(2) applying a viscous liquid sealing material to the outer surface of the pipe, as the pipe is advanced and rotated;

(3) passing the pipe, as it is advanced and rotated and after the sealing material has been applied to the surface thereof, past at least one doctor blade which doctors the sealing material to provide a smooth transition between the top of the weld bead and the adjacent outer surface of the pipe, the doctor blade being urged against the surface of the pipe so that it is resiliently deformed to conform generally to the shape of the pipe and to accommodate passage underneath it of the weld bead of the pipe, the doctor blade facing the advancing pipe surface, the mean angle of the axis of the doctor blade to the axis of the pipe, ϕ, being such that $1>\tan(\phi-5)>(d/c)$ where d is the axial distance which the pipe advances as it is rotated once, and c is the exterior circumference of the pipe and the angle between the surface of the doctor blade facing the advancing pipe surface and the surface of the pipe as it passes under the doctor blade, α, being from 20° to 80°; and

(4) wrapping a tape in a spiral overlapping manner around the pipe, as the pipe is adanced and retated and after it has passed the doctor blade.

4,372,797

METHOD FOR THE APPLICATION OF SUCTION TUBES TO PACKING CONTAINERS

Rolf M. Dilot, Lund, and Jan T. Hakansson, Eslöv, both of Sweden, assignors to Tetra Pak International AB, Lund, Sweden

Division of Ser. No. 5,903, Jan. 28, 1979, Pat. No. 4,293,369. This application Jun. 2, 1981, Ser. No. 269,915

Int. Cl.^{3} B65B *19/34*

U.S. Cl. 156—249 **4 Claims**

1. A method for the application of suction tubes, wrapped in protective casings and arranged in the form of a continuous band, to packing containers, comprising:

conveying a plurality of packing containers toward a suction tube applicator station;

orienting the packing containers at an angle to a path of conveyance of the packing containers;

applying an adhesive to a wall of each of the packing containers;

conveying a plurality of suction tubes in the continuous band toward said suction tube applicator station;

separating individual suction tubes from the continuous band;

orienting said individual suction tubes with respect to the packing containers; and

attaching said individual suction tubes to the packing containers at said suction tube applicator station by contacting the protective casing of each of said individual suction tubes with said adhesive on said wall of a respective one of the packing containers.

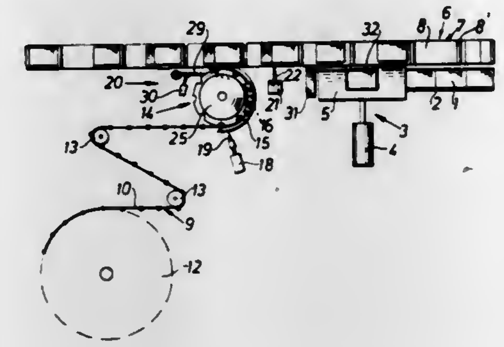

4,372,798

PROCESS FOR SECURING LAYERS OF MATERIAL TO SURFACES

Robert E. Dalton, 859 E. 169th St., South Holland, Ill. 60473

Continuation of Ser. No. 905,771, May 15, 1978, abandoned. This application Mar. 10, 1980, Ser. No. 128,492

Int. Cl.^{3} B32B *31/24;* H01G *00/00*

U.S. Cl. 156—273.1 **8 Claims**

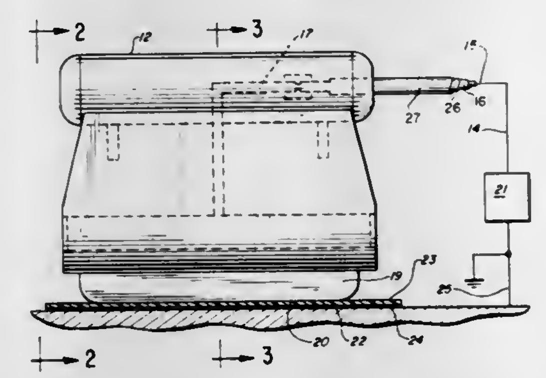

1. In the process for securing pressure-applied adhesive-coated film to a surface wherein an adhesive-coated film is positioned on a surface with the adhesive contacting the surface and pressure is applied to the film by a tool having an appendage for contacting the film while sliding thereon, the improvement which comprises simultaneously applying an electrostatic field across the film and adhesive from an electrode located in the tool through the tool appendage, which appendage is composed for a resistive semi-conductor, to the surface.

4,372,799

METHOD FOR USE IN THE MANUFACTURE OF A BUILDING ELEMENT

Lauritz B. L. Rasmussen, Lyngby, Denmark, assignor to Superfos Glasuld A/S (Superfos A/S), Vedbeak, Denmark

Filed Dec. 3, 1980, Ser. No. 212,512

Claims priority, application Denmark, Dec. 12, 1979, 5283/79

Int. Cl.^{3} C09J *5/02;* B32B *31/04*

U.S. Cl. 156—285 **1 Claim**

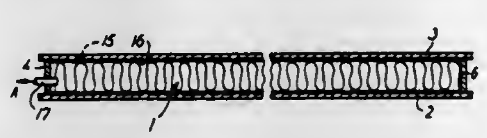

1. A method for manufacturing a building element in which a pair of opposed air impermeable cover boards forming opposite major surfaces of the element are separated by and secured to air impermeable edge strips constituting the side and end edges of the element, and a heat insulating material is positioned in the interior of the element, said method comprising the steps of;

forming an open casing by securing said edge strips to one of said cover boards;

applying moisture to the surface of said one cover board facing the interior of said casing and to one surface of the remaining cover board;

applying a moisture curing adhesive to cover substantially all of said moistened surfaces;

placing in said casing a substantially rigid, formstable core plate of an insulating material of a size and shape so as to occupy substantially all of the space within the casing, said core plate having an air permeable internal structure;

positioning said remaining cover board on said casing with its surface which previously had been moistened and had the adhesive applied thereto facing said core plate;

securing said remaining cover board to said edge strips;

applying suction to the interior of the closed casing through an opening in the casing to produce a partial vacuum within the casing whereby to press said cover boards into firm contact with substantially all of both major surfaces of said core plate and cause said moisture to react with said adhesive so that the cover boards are inseparably bonded to said core member plate.

4,372,800

CONTINUOUS PROCESS FOR PRODUCING REINFORCED RESIN LAMINATES

Masayuki Oizumi; Masakazu Uekita, both of Kobe; Masana Goto, Miki; Ichiro Azumi, Ohtsu; Shoji Uozumi; Masaharu Abe, both of Kobe; Yasuo Fushiki, Takatsuki; Minoru Isshiki, Kobe, and Kunio Kawasaki, Akashi, all of Japan, assignors to Kanegafuchi Kagaku Kogyo Kabushiki Kaisha, Osaka, Japan

Filed Jan. 8, 1981, Ser. No. 223,402

Claims priority, application Japan, Jan. 8, 1980, 55-1020

Int. Cl.^{3} C09J *5/02*

U.S. Cl. 156—307.3 **4 Claims**

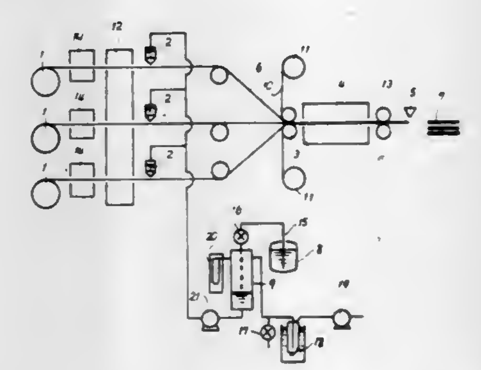

1. In a continuous process for producing reinforced resin laminates comprising the steps of impregnating a cellulosic fibrous substrate with a liquid thermosetting unsaturated polyester resin which is free of volatile solvent and is capable of curing without generating liquid and gaseous by-products, laminating a plurality of the resin-impregnated substrates into a unitary member, sandwiching the laminate between a pair of covering sheets, and curing the laminate while supporting the same between said pair of covering sheets without applying any appreciable pressure, the improvement comprising:

(a) pre-impregnating said substrate with a pre-impregnating liquid comprising a mixture or condensate of:

(i) methylol melamine and/or methylol guanamine, and

(ii) a higher aliphatic derivative having at least one group capable of condensing with said methylol group; and

(b) adjusting the final resin content in said resin-impregnated

substrate at 10 to 90% by weight based upon the total weight of said resin-impregnated substrate.

4,372,801

FILL STRAND TRANSFER APPARATUS FOR MAKING NON WOVEN FABRICS

Hollis H. Bascom, Livermore; Stephen Matweyou, Oakland; Alan J. Andersen, and John J. Greci, both of Livermore, all of Calif., assignors to Orcon Corporation, Union City, Calif.

Division of Ser. No. 103,621, Dec. 14, 1979, Pat. No. 4,295,905. This application Jun. 19, 1981, Ser. No. 275,494

Int. Cl.³ B32B *5/12*

U.S. Cl. 156—434 **4 Claims**

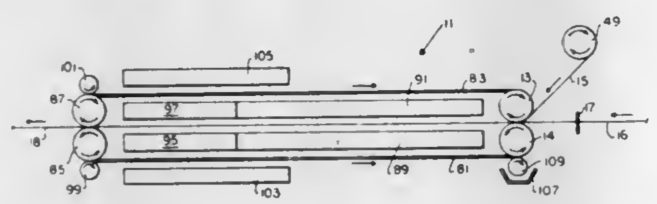

1. Apparatus for transferring fill strands to warp strands to form a fabric and comprising,

a set of pressure rolls,

warp guide means for guiding warp strands into the nip of the pressure rolls,

fill strand feed means for feeding a pre-formed planar set of adhesive coated fill strands having fixed orientation and spacing into the nip of the pressure rolls, and

wherein the adhesive on the fill strands is a composition which is heat activated under the pressure and/or heat produced in the pressure rolls to flow and to adhere to the warp strands to form the fabric.

4,372,802

APPARATUS FOR MOUNTING CHIP TYPE CIRCUIT ELEMENTS ON PRINTED CIRCUIT BOARDS

Kotaro Harigane; Kenichi Takahashi; Hirokazu Shudo, and Shuichi Tando, all of Tokyo, Japan, assignors to Tokyo Denki Kagaku Kogyo Kabushiki Kaisha, Japan

Filed May 21, 1981, Ser. No. 266,109

Claims priority, application Japan, Jun. 2, 1980, 55-72753; Jun. 9, 1980, 55-79296; Nov. 17, 1980, 55-164509; Nov. 17, 1980, 55-164510; Nov. 19, 1980, 55-164813

Int. Cl.³ B32B *31/04*

U.S. Cl. 156—538 **11 Claims**

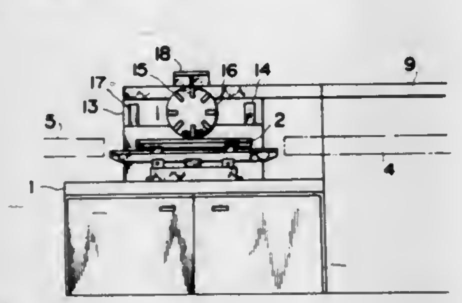

1. Apparatus for mounting chip type circuit elements on printed circuit boards, comprising:

supply unit means for supplying chip type circuit elements;

a plurality of pallets and means for conveying said pallets in an intermittent fashion in a particular direction;

sequence head means for shifting said chip type circuit elements from said supply unit means onto said pallets;

an X-Y table and means for conveying printed circuit boards onto said X-Y table;

mounting means including at least one mounting head for mounting said chip type circuit elements on a printed circuit board carried by said X-Y table; and

shifting head means for shifting said chip type circuit elements from said pallets to said at least one mounting head,

whereby upon said sequence head means shifting said circuit elements onto said pallets from said supply unit means, said pallets are conveyed in an intermittent fashion in said particular direction whereupon said shifting head means shifts said circuit elements to said mounting head from said pallets, and whereupon said mounting means mounts said circuit element on a printed circuit board carried by said X-Y table.

4,372,803

METHOD FOR ETCH THINNING SILICON DEVICES

Joseph R. Gigante, Oceanside, Calif., assignor to The United States of America as represented by the Secretary of the Navy, Washington, D.C.

Filed Sep. 26, 1980, Ser. No. 191,658

Int. Cl.³ H01L *21/308*

U.S. Cl. 156—626 **5 Claims**

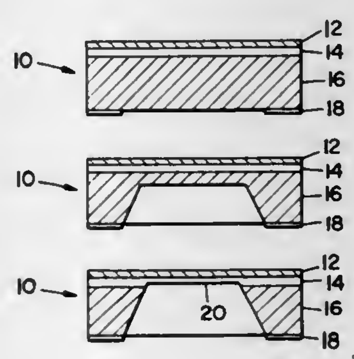

1. The method of etch-thinning silicon devices in three sequential etches such that a uniform approximately 10 micron thick membrane is formed over the pixels of the device comprising the steps in combination:

(a) providing a multi-layer wafer, said wafer having a first layer transparent to light and impervious to etching fluids, an epitaxial second layer having one surface adhesively bonded to one side of said first layer, and a p^+ third layer formed on the opposite surface of said epitaxial layer, said third layer having a higher boron doping level than said second layer such that there exists a transition region between said third layer and said second layer having a predetermined doping gradient;

(b) forming an etch mask on the opposite surface of said third layer;

(c) applying a first fluid etchant in concert with ultrasonic agitation to regions of said third layer where exposed by said etch mask said first fluid etchant consisting of, by weight, 2 parts KOH to 3 parts H_2O at 60° C. and acting to pre-thin said third layer;

(d) shining a light through said first layer and into said wafer while said first fluid etchant is applied until said exposed regions become translucent;

(e) subdividing said wafer into smaller components;

(f) applying a second fluid etchant in an agitation washtub to said components having exposed regions etched by said first fluid etchant, said second fluid etchant consisting of 1 part HF to 3 parts HNO_3 to 10 parts acetic acid in concert with a critical volumetric amount of H_2O_2 such that said exposed region of said third layer and a portion of said transition region lying thereunder is etched away, said critical amount of H_2O_2 having a critical ratio to said second fluid etchant dependent on the area exposed to said second fluid etchant, said proportion being 2:350 for a ¼ square inch area and 5:350 for areas up to 3 square inches;

(g) removing said components when said exposed areas appear flat and reflecting; and

(h) applying a third fluid etchant to said exposed areas of said components to clean them, said third fluid etchant consisting of, by proportion, 1.0 gram potassium permanganate to 150 ml HF to 150 ml acetic acid.

4,372,804

METHOD FOR MAKING MULTILAYER PRINTED WIRING BOARD

Takayoshi Hanabusa; Kenji Yamamoto, both of Nagano; Shinzi Umemoto, Suzaka; Keiji Kurosawa, and Mitsuo Yamashita, both of Nagano, all of Japan, assignors to Fujitsu Limited, Kawasaki, Japan

Continuation of Ser. No. 64,122, Aug. 6, 1979, abandoned, which is a continuation of Ser. No. 820,565, Aug. 1, 1977, abandoned. This application Apr. 2, 1981, Ser. No. 250,177

Claims priority, application Japan, Aug. 4, 1976, 51-92360

Int. Cl.³ B44C *1/22;* **C03C** *15/00, 25/06;* **C23F** *1/02*

U.S. Cl. 156—631 **8 Claims**

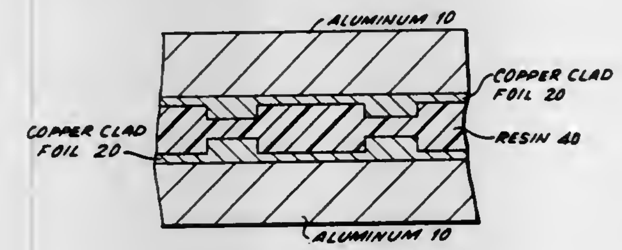

1. A method of making a multilayer printed wiring board including a plurality of printed wiring boards, said method comprising the steps of

providing a copper clad laminate with buried lands on a basic material consisting of glass fiber impregnated with resin and arranging copper foil with lands projecting in correspondence with land forming positions at a first side and a flat surface second side so that the projecting lands face the basic material side;

laminating copper foil and said basic material to provide a copper clad laminate;

etching said copper clad laminate to provide an intermediate layer substrate having a desired circuit including a land pattern and circuit conductors;

laminating a plurality of said intermediate layer substrates by thermal bonding with said basic material and applying pressure to the layers to provide a multilayer laminate;

boring through holes to specified lands of each layer of said multilayer laminate; and

plating the through holes bored in said multilayer laminate upon completion of said boring.

4,372,805

METHOD FOR REGENERATING AN ETCH SOLUTION FOR ALUMINUM AND THE ALLOYS THEREOF

Masaaki Takahashi, c/o Toyo Giken Kogyo Co., Ltd., 19-17, Kaminarimon 2-chome, Taito-ku, Tokyo, and Hideki Hamamura, 7-9, Kishibeminami 2-chome, Suita, Osaka, both of Japan

Filed Dec. 28, 1981, Ser. No. 334,467

Claims priority, application Japan, Aug. 10, 1981, 56-125499

Int. Cl.³ C23F *1/00;* **B44C** *1/22;* **C03C** *15/00, 25/06*

U.S. Cl. 156—642 **4 Claims**

1. A method for regenerating an etch solution for aluminum and the alloys thereof comprising the steps of:

(a) diluting at least a portion of an etch solution, after being used in caustic etching of aluminum and the alloys thereof, containing 100 through 240 g/l of free sodium hydroxide and 30 through 200 g/l of dissolved aluminum which is in an unsaturated state, as aluminum hydroxide, or in a similar condition by adding water in an amount of 0.5 through 2.5 times by volume based on the volume of the etch solution to be diluted, whereby the solution containing aluminum hydroxide at a supesaturated state is formed;

(b) concentrating the resultant liquid to such an extent that the concentration of free sodium hydroxide is within the

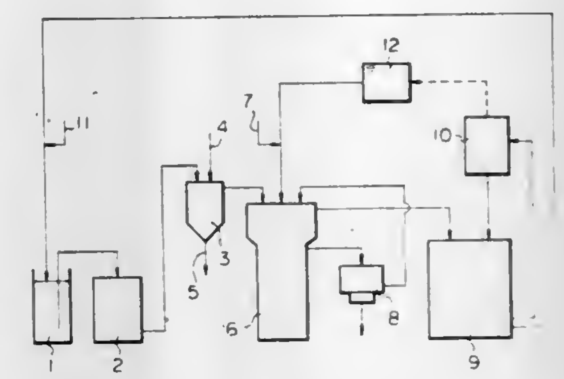

range of from 110 to 300 g/l, whereby the concentrated solution is reused as an etch solution.

4,372,806

PLASMA ETCHING TECHNIQUE

John L. Vossen, Jr., Bridgewater, N.J., assignor to RCA Corporation, New York, N.Y.

Filed Dec. 30, 1981, Ser. No. 335,851

Int. Cl.³ C23F *1/02*

U.S. Cl. 156—643 **4 Claims**

1. In a process of plasma etching a metal or an alloy thereof which, in the presence of moisture, will form a passivating oxide at room temperature under plasma discharge, the improvement comprising pretreating said metal or alloy with a hydrogen glow discharge.

4,372,807

PLASMA ETCHING OF ALUMINUM

John L. Vossen, Jr., Bridgewater, N.J., and Bernard Halon, Brooklyn, N.Y., assignors to RCA Corporation, New York, N.Y.

Filed Mar. 25, 1982, Ser. No. 362,041

Int. Cl.³ C23F *1/02*

U.S. Cl. 156—643 **7 Claims**

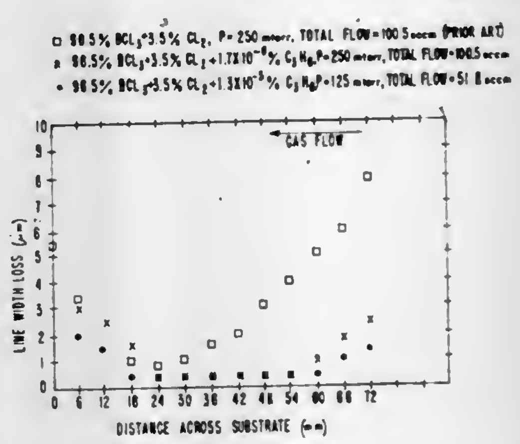

1. In a process of plasma etching aluminum or an alloy thereof with an etchant gas which will isotropically etch the sidewalls of patterns being etched, the improvement comprising adding to the etchant gas gaseous hydrocarbon which will polymerize under conditions of glow discharge in an amount effective to reduce sidewall etching.

4,372,808

PROCESS FOR REMOVING A LIQUID PHASE EPITAXIAL LAYER FROM A WAFER

Baylor B. Triplett, La Honda; Carlo Ferrando, Aptos, and Guido Galli, Saratoga, all of Calif., assignors to Intel Magnetics, Inc., Santa Clara, Calif.

Filed Mar. 22, 1982, Ser. No. 360,809

Int. Cl.³ H01L *21/312;* **B44C** *1/22*

U.S. Cl. 156—655 **9 Claims**

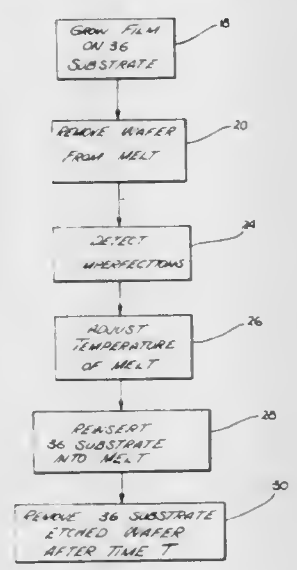

1. A process for etching an epitaxial layer of material from a substrate comprising the steps of:

providing a liquid melt including a predetermined quantity of said epitaxial material within said melt;

adjusting the temperature of said melt within a predetermined range such that said melt temperature lies above an equilibrium temperature of said epitaxial layer, and below an equilibrium temperature of said substrate, such that said epitaxial layer will be etched off of said substrate at a known rate, said rate being a function of said temperature;

immersing said substrate including said epitaxial layer into said melt;

removing said substrate from said melt once a desired amount of epitaxial material has been etched off of said substrate;

whereby said epitaxial material is removed from said substrate.

4,372,809

METHOD FOR MANUFACTURING SOLDERABLE, TEMPERABLE, THIN FILM TRACKS WHICH DO NOT CONTAIN PRECIOUS METAL

Virinder Grewal, Ebersberg, and Werner Reindl, Unterhaching, both of Fed. Rep. of Germany, assignors to Siemens Aktiengesellschaft, Berlin & Munich, Fed. Rep. of Germany

Filed Feb. 5, 1982, Ser. No. 346,100

Claims priority, application Fed. Rep. of Germany, Mar. 2, 1981, 3107943

Int. Cl.³ C23F *1/02;* **B05D** *5/12*

U.S. Cl. 156—656 **8 Claims**

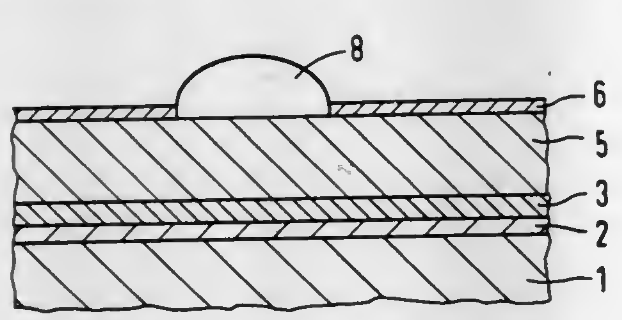

1. A method for manufacturing solderable and temperable thin film conductor tracks with no precious metal on an electrically non-conducting substrate comprising the steps of:

applying a resistance layer to said substrate;

applying an adhesive layer over said resistance layer;

applying a conductive layer consisting of copper over said adhesive layer; and

applying an anti-oxidation and anti-corrosion layer consisting of aluminum or an aluminum alloy in vacuum to said adhesive layer and to said conductive layer.

4,372,810

METHOD AND DEVICE FOR MANUFACTURING MECHANICAL PULP

Hjalmar S. I. Bystedt, Enebyberg, Sweden, assignor to Sunds Defibrator AB, Stockholm, Sweden

Filed Oct. 9, 1980, Ser. No. 195,707

Int. Cl.³ D21B *1/04*

U.S. Cl. 162—23 **8 Claims**

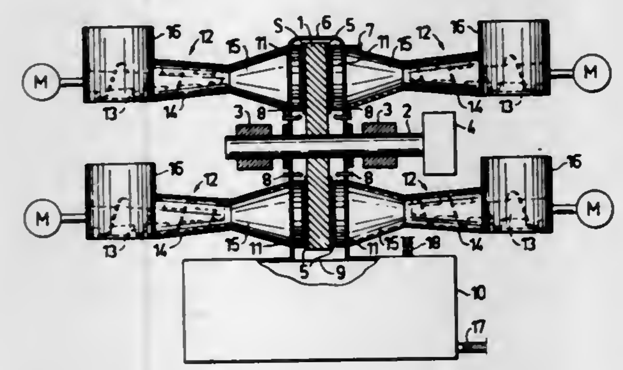

1. Method for manufacturing mechanical pulp from lignocellulosic material by forcing the said material into contact with opposite end faces of a single grinding disc (1) which revolves about a central axle (2) perpendicular to said two opposite end faces of the disc, which method is characterized in that the material is separately fed in bulk, particulate form to each face, a large number of particles of the said material simultaneously being retained against, compressed and, in the presence of water, forced directly into contact with one or more grinding areas (5) located on each of said opposite end faces of said single grinding disc, the disc being enclosed in a sealed, pressurized housing (6).

4,372,811

ALKALINE OXYGEN DELIGNIFICATION AND BLEACHING OF CELLULOSE PULP IN THE PRESENCE OF AROMATIC DIAMINES

Hans O. Samuelson, and Kjell E. Abrahamsson, both of Gothenburg, Sweden, assignors to Mo och Domsjo Aktiebolag, Ornskoldsvik, Sweden

Filed May 4, 1981, Ser. No. 260,436

Claims priority, application Sweden, Mar. 21, 1981, 8003407

Int. Cl.³ D21C *3/02, 3/04*

U.S. Cl. 162—38 **31 Claims**

1. A process for the alkaline oxygen delignification and bleaching of chemical cellulose pulp while inhibiting degradation of carbohydrates in the cellulose pulp, which comprises alkaline oxygen delignifying and bleaching chemical cellulose pulp in the presence of an aromatic diamine having at least one amino group directly attached to an aromatic ring and having the formula:

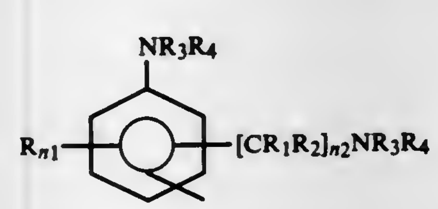

in which:

R is selected from the group consisting of hydrogen, alkyl, aryl and alkylaryl (the aryl including aryl condensed with the

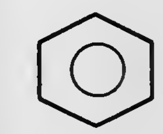

ring), cycloalkyl and alkyl cycloalkyl (the cycloalkyl including cycloalkyl condensed with the

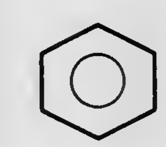

ring), the alkyl having from one to six carbon atoms, the aryl having from six to eighteen carbon atoms, the cycloalkyl having from five to seven carbon atoms; hydroxyl and carboxylic acid;

R_1, R_2, R_3 and R_4 are selected from the group consisting of hydrogen, alkyl having from one to six carbon atoms, aryl having from six to ten carbon atoms, and cycloalkyl having from five to eight carbon atoms;

n_1 is a number from one to four; and

n_2 is a number from zero to six, the aromatic diamine being in an amount sufficient to inhibit degradation of carbohydrates in the cellulose pulp during said delignifying and bleaching, said alkaline oxygen delignifying and bleaching being with oxygen and alkaline chemical in an aqueous liquid phase under superatmospheric pressure at an elevated temperature of at least 80° C.

4,372,812

CHLORINE FREE PROCESS FOR BLEACHING LIGNOCELLULOSIC PULP

Richard B. Phillips, Mobile, Ala.; Arthur W. Kempf, Warwick, N.Y., and Robert C. Eckert, Kent, Wash., assignors to International Paper Company, New York, N.Y.

Continuation of Ser. No. 57,170, Jun. 22, 1979, abandoned, which is a continuation of Ser. No. 894,606, Apr. 7, 1978, abandoned. This application Feb. 11, 1981, Ser. No. 233,668

Int. Cl.³ D21C *9/10, 9/16*

U.S. Cl. 162—40 **6 Claims**

1. A non-chlorine multi-stage process for bleaching chemical lignocellulosic pulp which minimizes changes in temperature and pH from stage to stage, said process comprising in sequence:

(a) an oxygen bleaching stage carried out at about 3% to 30% pulp consistency, at 80° to 120° C. and at a pH of 9 to 12 for a reaction time of 10 to 60 minutes with an oxygen treatment solution comprising 0.2% to about 3% oxygen, based on oven-dried pulp, followed in sequence by separating the oxygen treatment solution from and washing the pulp at about 1% pulp consistency to afford final removal of the oxygen treatment solution from the pulp; then

(b) a peroxide bleaching stage carried out at 10% to 25% pulp consistency, at 20° to 90° C. and at a pH of 3 to 5 for a reaction time of 10 to 300 minutes, with a peroxide treatment solution comprising 0.2% to about 2% peroxide, based on oven-dried pulp, followed in sequence by separating the peroxide treatment solution from and washing the pulp at about 1% pulp consistency to afford final removal of the peroxide treatment solution from the pulp, said peroxide being selected from the group consisting of alkaline hydrogen peroxide, acid hydrogen peroxide, and peracid; and then

(c) at least one ozone bleaching stage carried out at 1% to 40% pulp consistency, at 15° to 60° C. and at a pH of 2 to 7, with an ozone treatment solution until 0.2% to 1% ozone on an oven-dried pulp basis is consumed, each said ozone bleaching stage being followed by separating the ozone treatment solution from and washing the pulp at about 1% pulp consistency to afford final removal of the ozone treatment solution from the pulp.

4,372,813

PROCESS FOR INHIBITING THE CORROSION OF EQUIPMENT MADE OF TITANIUM

Lucien Clerbois, and Lucien Plumet, both of Vilvoorde, Belgium, assignors to Interox (Societe Anonyme), Brussels, Belgium

Filed Feb. 20, 1981, Ser. No. 236,822

Claims priority, application France, Feb. 21, 1980, 80 03890

Int. Cl.³ D21C *7/00;* **C11D** *7/54;* **C23F** *11/18*

U.S. Cl. 162—48 **10 Claims**

1. Process for inhibiting the corrosion of equipment made of titanium or of alloys containing titanium by an aqueous solution containing a peroxy compound, comprising inhibiting the corrosion by having the solution contain calcium, strontium or barium ions.

4,372,814

PAPER HAVING MINERAL FILLER FOR USE IN THE PRODUCTION OF GYPSUM WALLBOARD

Norman E. Johnstone, and John R. Kehoe, both of Schaumburg, Ill., assignors to United States Gypsum Company, Chicago, Ill.

Filed May 13, 1981, Ser. No. 263,371

Int. Cl.³ B32B *13/08*

U.S. Cl. 162—124 **22 Claims**

1. Gypsum wallboard comprising a core of set calcium sulfate dihydrate and a paper cover sheet bonded to each surface thereof, each of said paper cover sheets comprising a composite paper which comprises in dry weight percent:

(A) fibers in an amount of from about 65% to about 90% and having a fiber freeness of from about 350 to 550 ml. Canadian Standard Freeness,

(B) a particulate mineral filler in an amount of from about 10% to about 35%,

(C) a binder in an effective amount to retain said mineral filler,

(D) a flocculant in an amount of from about 2 lb. to about 4 lb./ton, and

(E) a sizing agent in an effective amount to prevent water penetration,

said paper being sufficiently porous to permit good drainage and rapid drying during its production, and when applied to the surfaces of a gypsum slurry for forming wallboard, permits less heat to be utilized in the wallboard conversion, the use of said paper thereby conserving energy both in paper production and in the board production.

4,372,815

METHOD FOR UPGRADING PAPER AND THE PRODUCT FORMED THEREBY

David D. Newkirk, Beaverton, Oreg., and Darrel L. Wilhoit, Wadsworth, Ill., assignors to Crown Zellerbach Corporation, San Francisco, Calif.

Filed Aug. 17, 1981, Ser. No. 293,075

Int. Cl.³ D21H *3/02*

U.S. Cl. 162—158 **8 Claims**

1. A method for upgrading cellulose sheets by substantially increasing the absorbency, bulk, and softness thereof, which comprises treating cellulose with a chemical compound having the following general formula:

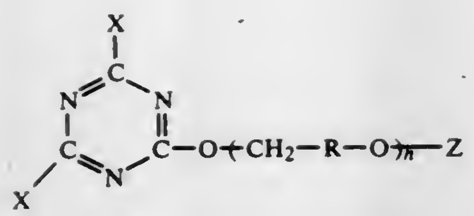

in which X represents halogen; R represents an alkylene group, either straight chain or branched, having from one to five carbon atoms; n is from about 2 up to about 30; and Z is a halogen substituted 1,3,5-triazinyl group.

5. An absorbent, bulky, and soft cellulose sheet which comprises cellulose which has been treated with a chemical compound having the following general formula:

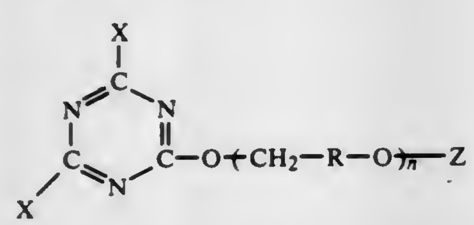

in which X represents halogen; R represents an alkylene group, either straight chain or branched, having from one to five carbon atoms; n is from about 2 up to about 30; and Z is a halogen substituted 1,3,5-triazinyl group.

4,372,816
HEAD BOX FOR A PAPER MAKING MACHINE

Jakob Wolf, Heidenheim, and Simon Juhas, Nattheim, both of Fed. Rep. of Germany, assignors to J. M. Voith GmbH, Fed. Rep. of Germany
Filed Mar. 12, 1981, Ser. No. 242,724
Claims priority, application Fed. Rep. of Germany, Mar. 20, 1980, 3010730
Int. Cl.³ D21F *1/06*
U.S. Cl. 162—343 14 Claims

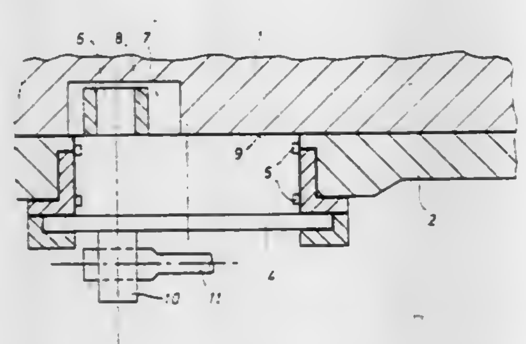

1. In head box for a paper making machine, the head box having a head box chamber and the chamber being defined between opposed side walls of the head box; a circular opening in one said side wall; the chamber including an outlet channel;
at least one partition wall supported in the outlet channel of the chamber between the side walls;
and adjusting means for adjusting the initial position of the at least one partition wall in the outlet channel; the adjusting means comprising a circular shaft supported in a watertight manner in the circular opening formed in the one side wall of the chamber and being rotatable about its axis with respect to the side walls;
the shaft having a side facing inwardly of the chamber; a journal pin being supported on the side of the shaft facing inwardly of the chamber and being eccentric with respect thereto; means in the partition wall for receiving the journal pin for adjusting the initial position of the partition wall as the shaft is rotated.

4,372,817
NUCLEAR FUEL ELEMENT

Joseph S. Armijo, Saratoga, Calif., and Louis F. Coffin, Jr., Schenectady, N.Y., assignors to General Electric Company, Schenectady, N.Y.
Continuation of Ser. No. 727,183, Sep. 27, 1976, abandoned. This application Feb. 23, 1979, Ser. No. 14,348
The portion of the term of this patent subsequent to Apr. 29, 1997, has been disclaimed.
Int. Cl.³ G21C *3/20*
U.S. Cl. 376—417 4 Claims

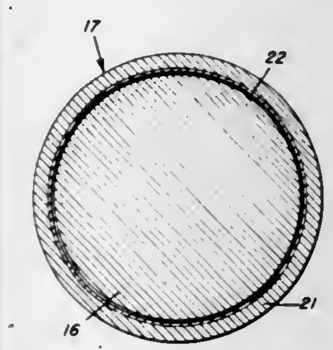

1. A nuclear fuel element which comprises an elongated composite cladding container having a zirconium alloy tube containing constituents other than zirconium in an amount greater than 1000 parts per million and a continuous barrier of zirconium metal of impurity content less than about 500 parts per million of which impurity content the oxygen content is less than about 200 parts per million, said barrier being metallurgically bonded to the inside surface of the alloy tube, said high purity zirconium metal barrier being of thickness from about 1 percent to 30 percent of the thickness of said alloy tube, a central core of a body of nuclear fuel material selected from the group consisting of compounds of uranium, plutonium, thorium and mixtures thereof disposed in and partially filling said container so as to leave a gap between said container and said core and an internal cavity at one end of the container, an enclosure integrally secured and sealed at each end of said container and a nuclear fuel material retaining means positioned in the cavity.

4,372,818
APPARATUS FOR THE DISTILLATION AND RECTIFICATION OF MIXTURES

Yaacov Kaganovsy, Ramat-Gan; Yosef Kustanovich, Rechovot; Shimshon Shmuter; Vadim Gelfer, both of Ramat-Gan, and Shimon Muchnik, Tel-Aviv, all of Israel, assignors to Hydrola Ltd., Bat-Yam, Israel
Continuation of Ser. No. 915,182, Jun. 14, 1978, abandoned. This application Aug. 15, 1980, Ser. No. 178,636
Claims priority, application Israel, Jun. 14, 1977, 52316
Int. Cl.³ B01D *3/28, 3/30*
U.S. Cl. 202—83 17 Claims

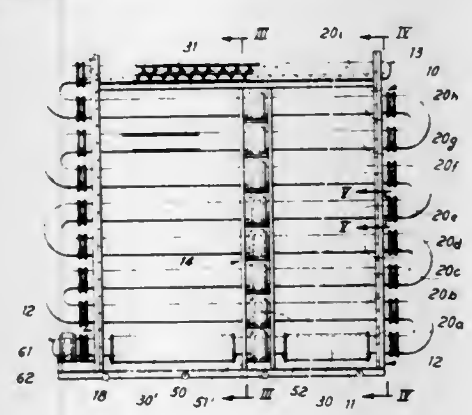

1. An apparatus for processing by fractional distillation or rectification a volatile fluid material including a mixture of plural components having different boiling points, said apparatus comprising:
a plurality of substantially horizontally aligned tubular main sections extending parallel to each other and successively positioned one above the other;
a plurality of tubular connecting sections joining adjacent ends of adjacent of said main sections, such that at least a number of said sections are connected in series to define an internal space providing an elongated and tortuous path for the flow therethrough of materials to be processed;
means for introducing volatile fluid material at at least one point into said internal space;
means for applying heat to at least one of said main sections and thereby for achieving vaporization of at least some of the plural components of said volatile fluid material within said internal space, and means for withdrawing heat from at least another one of said main sections and thereby for condensing at least some of the vapors in said internal space, whereby there are provided throughout said internal space vapor portions and liquid portions in contact;
stirring means for agitating and mixing said liquid and vapor portions flowing through at least some of said sections; and
means for withdrawing separate and different said portions from at least two separate locations of said internal space, said at least two separate locations being distinct from one another and from said point at which said volatile fluid material is introduced into said interval space.

4,372,819
ALIGNING DEVICE

Rodney C. Irwin, Monroeville, Pa., assignor to Koppers Company, Inc., Pittsburgh, Pa.
Division of Ser. No. 298,788, Sep. 2, 1981, Pat. No. 4,336,107. This application Mar. 22, 1982, Ser. No. 360,601
Int. Cl.³ B61L *15/00, 25/02;* C10B *33/00, 41/00*
U.S. Cl. 202—239 18 Claims

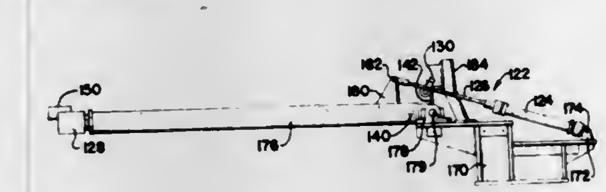

1. A device for aligning rail mounted equipment with a track-side structure comprising:
(a) a base structure having vertically projecting forward and rearward base brackets;
(b) an arm pivotably connected at its rearward end to the forward base bracket so as to be rotatable thereon about a horizontal first axis in a vertical arc from an elevated to a lowered position, and said arm, itself, having adjacent its rearward end a vertical arm bracket and at its terminal end an aligning projection which is engageable with an aligning plate when the arm is displaced to its lowered position;
(c) a piston and cylinder combination pivotally connected at its rearward end to the rearward base bracket so as to be rotatable thereon through a vertical arc about a horizontal second axis, said second axis being parallel to the first axis;
(d) a rod projecting forward from the piston of said piston and cylinder combination toward the arm bracket and connected to said arm bracket so as to pivot on a third axis, said third axis being parallel to said first axis;
(e) means for compressing said piston and cylinder combination so as to displace the arm to its elevated position;
(f) means for expanding said piston and cylinder combination so as to displace the arm to its lowered position; and
(g) control means for selectively activating either said means for expanding the piston and cylinder combination or said means for compressing said piston and cylinder combination.

4,372,820
CHUCK DOOR FOR COKE OVEN PUSHER SIDE DOOR AND HEAT RADIATION SHIELD

Roy Naevestad, Fanwood, N.J., assignor to Wilputte Corporation, Murray Hill, N.J.
Filed Feb. 17, 1981, Ser. No. 234,965
Int. Cl.³ C10B *25/06*
U.S. Cl. 202—248 2 Claims

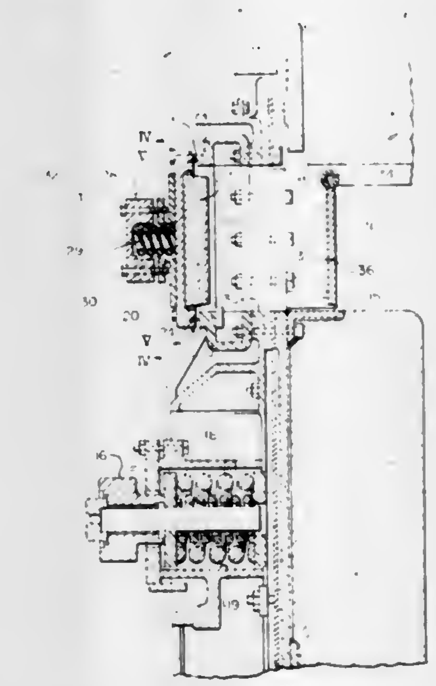

1. In a coke oven having a coking chamber, a doorway into said coking chamber and a main door to close said doorway, said main door having an auxiliary opening therein through which to insert a leveling bar for leveling coal in said coking chamber, and an auxiliary door hinged to swing outwardly on said main door for closing said auxiliary opening therein, the improvement comprising a heat shield interposed between said auxiliary door and said coking chamber, and means affixed to said main door pivotally suspending on a horizontal hinge said heat shield inside said auxiliary opening within said main door for movement independent of the auxiliary door, whereby when said main door is closed said heat shield swings upwardly and inwardly responsive to contact of the end of the leveling bar therewith as it is moved into the coking chamber and whereby said heat shield swings down automatically upon withdrawal of said leveling bar.

4,372,821
EMISSION CONTROL APPARATUS

Thomas V. Reinauer, Summit, N.J., assignor to United States Filter Corporation, New York, N.Y.
Filed Aug. 31, 1981, Ser. No. 297,981
Int. Cl.³ C10B *33/00, 45/00*
U.S. Cl. 202—263 9 Claims

1. Apparatus for controlling the gaseous and particulate emissions from a battery of coke ovens occasioned by the discharge of coke from the individual ovens constituting the same comprising
a shed extending along the coke delivery side of said battery of coke ovens having a roof of progressively increasing elevation adjacent the coke delivery side of said ovens, spaced external end walls and an external outer wall,
a longitudinal upright partition within said shed disposed intermediate said outer wall and the delivery side of said battery of coke ovens and dividing said shed into an elongate emission entrapment chamber for containing the gaseous and particulate emissions attendant coke dis-

charge and an expansion chamber extending parallel to and offset laterally from the entrapment chamber,

flow restriction means disposed at the upper end of said elongate emission entrapment chamber for accelerating the velocity of the gaseous emission attendant coke discharge leaving said entrapment chamber so that particulate matter is inhibited from settling in said entrapment chamber and is carried into said expansion chamber where gas velocity is reduced and gravity induced separation of entrained particulates is effected,

said expansion chamber dependently terminating in a sloped wall hopper means for collection separated particulate matter,

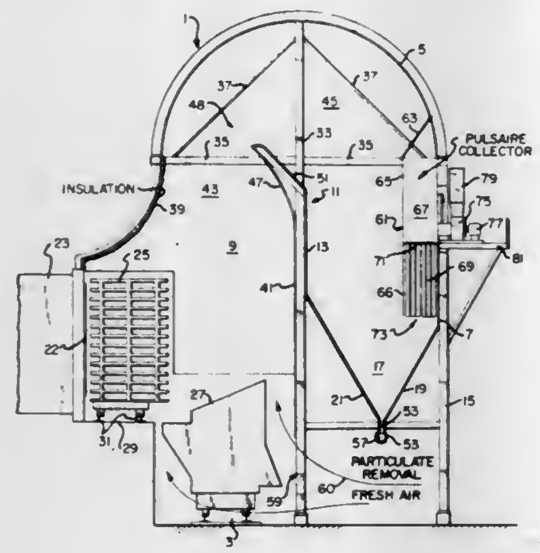

means for venting said expansion chamber and for separating nonsettled particulates from said emitted gaseous carrier consisting essentially of filter means and fan means,

said filter means employing fabric filter media and having a plurality of outlets disposed within said expansion chamber and mounted adjacent an external shed wall,

said fan means connected to said filter means for inducing a directed flow of said emitted gaseous carrier from said expansion chamber, through said fabric filter medium and externally of said shed and with an attendant accumulation of emitted particulate matter on the upstream side of said fabric filter medium,

and means for effecting the periodic removal of said accumulated particulate matter from said fabric filter medium and introduction thereof into said hopper means.

4,372,822
PRODUCTION OF ANHYDROUS ETHANOL
Werner C. Muller, Dobbs Ferry, N.Y., and Franklyn D. Miller, Cincinnati, Ohio, assignors to National Distillers & Chemical Corp.
Continuation of Ser. No. 156,979, Jun. 6, 1980, abandoned. This application Jul. 27, 1981, Ser. No. 287,018
Int. Cl.[3] B01D *3/36*
U.S. Cl. 203—19 **9 Claims**

1. A process for obtaining substantially anhydrous ethanol which comprises:

(a) concentrating to high proof a dilute aqueous ethanol feed containing one or more dissolved components in an amount which would, unless removed therefrom, tend to interfere with phase separation in a decanter, to provide an overhead vapor stream containing a major proportion of the low boiling component(s) present in the feed, and a pasteurized cut of concentrated ethanol containing the balance of the low boiling component(s) present in the feed of sufficient value to eliminate the requirement of a preliminary extractive distillation step;

(b) dehydrating the aforesaid pasteurized cut to substantially complete dryness in an anhydrous column operated under substantially elevated pressure with thermal values recovered therefrom being used in the operation of the rectifying column;

(c) separating condensed overhead vapors from the anhydrous column in a decanter into an azeotrope-rich phase and a water-rich phase containing ethanol and substantially all of said balance of said low boiling component(s); and,

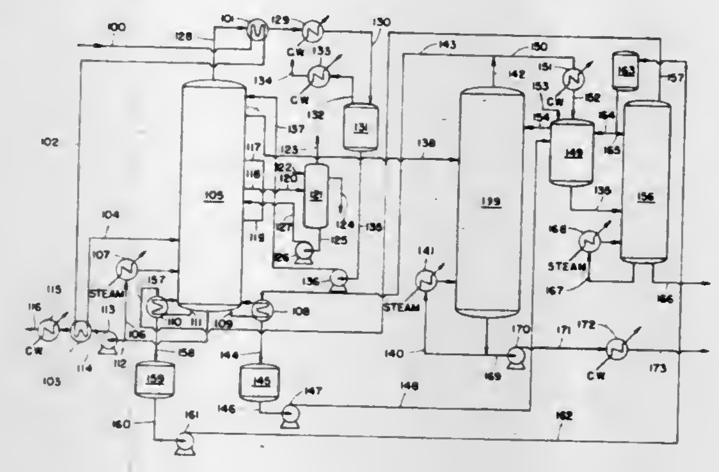

(d) separating the water-rich phase obtained from the decanter into vapor overheads containing ethanol and low boiling component(s), and water, in a light-ends column operated under substantially elevated pressure with thermal values recovered therefrom being used in the operation of the rectifying column.

4,372,823
RECHARGEABLE ELECTRICAL STORAGE BATTERY WITH ZINC ANODE AND AQUEOUS ALKALINE ELECTROLYTE
Peter K. Church, Cascade, and Alan G. Phillips, Arvada, both of Colo., assignors to El-Chem Corporation, Cascade, Colo.
Division of Ser. No. 100,845, Dec. 6, 1979, Pat. No. 4,307,164, which is a division of Ser. No. 927,927, Jul. 25, 1978, Pat. No. 4,207,391. This application Oct. 16, 1981, Ser. No. 312,098
Int. Cl.[3] H01M *10/44*
U.S. Cl. 204—2.1 **12 Claims**

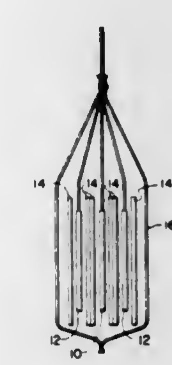

1. A method of making an anode for a battery having a zinc containing anode which comprises forming a slurry of finely divided zinc metal particles, applying a coating of the slurry to a metal substrate, drying the slurry, immersing the coated substrate in an aqueous alkaline electrolyte solution, positioning a cathode in the electrolyte, electrically connecting the anode with the cathode until the cathode is substantially completely discharged as evidenced by the evolution of hydrogen gas therefrom and maintaining the electrical connection for a period of time sufficient to oxidize in situ substantially all of the zinc metal in the coating to zinc oxide as evidenced by substantial cessation of hydrogen evolution at the cathode.

4,372,824
METHOD OF MANUFACTURING OXYGEN SENSOR
Nobuhiro Toda, Aichi, and Masahiko Yamada, Nagoya, both of Japan, assignors to NGK Spark Plug Co., Ltd., Nagoya, Japan
Filed Mar. 16, 1981, Ser. No. 243,803
Claims priority, application Japan, Apr. 15, 1980, 55-50082
Int. Cl.[3] C25D *5/10, 5/34, 5/50, 7/04*
U.S. Cl. 204—25 **9 Claims**

1. In a method of manufacturing an oxygen senser having an oxygen ion transmissible solid electrolyte, an inside electrode adhered to an inner surface of said electrolyte, and an outside electrode adhered to an outside surface of said electrolyte, said senser being operative to produce between said inside and outside electrodes an electromotive force corresponding to the difference between an oxygen concentration at the outer surface exposed to a detection gas and an oxygen concentration at the inner surface exposed to a reference gas, the improvement comprising the successive steps of adhering to the outer surface of said solid electrolyte an outside electrode having a thickness of at least 0.5μ by thin film techniques, heat treating said outside electrode at a temperature higher than the temperature at which a metal constituting the main ingredient of said outside electrode begins to be sintered to provide on said outside electrode a number of holes or broken holes whose diameter or width is larger than the thickness of said outside electrode, adhering to the inner surface of said solid electrolyte a porous inside electrode by thin film techniques or a suspension coating process, and heat treating said inside electrode at a temperature lower than the temperature at which a metal constituting said inside electrode begins to be sintered.

4,372,825
PLATING SPARGER AND METHOD
Charles D. Eidschun, Clearwater, Fla., assignor to Micro-Plate, Inc., Clearwater, Fla.
Filed Nov. 6, 1981, Ser. No. 318,953
Int. Cl.[3] C25D *5/08, 21/10*
U.S. Cl. 204—27 **9 Claims**

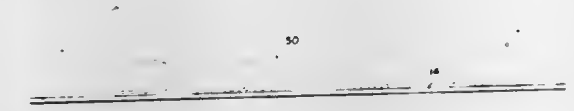

1. A sparger assembly for use in a plating chamber filled with an electrolyte comprising, in combination,

a plurality of vertical sparger pipes,

a plurality of nozzles positioned extending diametrically from each of said pipes,

said pipes being oriented within the plating chamber with the nozzles directed at an angle with the cathode,

alternating sparger pipes and nozzles being spaced with axes of flow intermediate the axis of flow of each adjacent sparger pipe, whereby a plurality of footprint elliptical-type patterns are directed against a workpiece passing by each sparger nozzle.

4,372,826
ELECTROLYTE FOR CATHODIC DEPOSITION OF NICKEL ALLOYS WITH IRON
Vaclav Landa; Jaromir Vitek; Pavel Nejedly; Vladimir Holpuch, all of Prague, Czechoslovakia; Juozas Bubelis, and Atanas-Nemezyus Stepanovicius, both of Vilnius, U.S.S.R., assignors to Statni vyzkumny ustav materialu, Prague, Czechoslovakia
Filed May 6, 1981, Ser. No. 260,936
Claims priority, application Czechoslovakia, Mar. 7, 1980, PV 1609
Int. Cl.[3] C25D *3/56*
U.S. Cl. 204—43 T **7 Claims**

1. An electrolyte for the cathodic deposition of nickel alloys with iron, comprising an aqueous solution of nickel/II/ sulphosalicylate in a concentration from 0.1 to 1.05×10^3 mole.m^{-3} and iron/II/ sulphosalicylate, in a concentration from 0.01 to 0.30×10^3 mole.m^{-3}.

4,372,827
NOVEL HORIZONTAL DIAPHRAGMLESS ELECTROLYZER
Placido M. Spaziante, Lugano, Switzerland, and Giancarlo Sioli, Cernobbio, Italy, assignors to Panclor S.A., Taverne, Switzerland
Filed Nov. 10, 1980, Ser. No. 205,246
Int. Cl.[3] C25B *1/26, 9/00*
U.S. Cl. 204—95 **20 Claims**

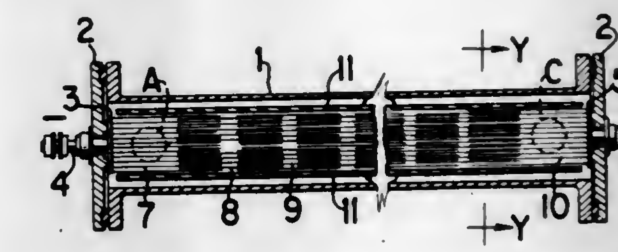

1. A horizontal diaphragmless bipolar electrolyzer comprising a horizontal housing made of electrically insulating material, an anodic or cathodic plate at one end of the housing provided with a plurality of blade shaped electrodes vertically arranged along the housing axis, a reverse polarity plate at the opposite end of the housing provided with a plurality of blade shaped electrodes vertically arranged along the housing axis, at least one bipolar electrode element with blade shaped anodes and cathodes vertically arranged on opposite sides thereof on the housing axis to interleaf with adjacent electrodes of opposite polarity whereby there is unrestricted horizontal electrolyte flow from end plate to end plate, means for introducing fresh electrolyte at one end of the housing, means for removing treated electrolyte at the opposite end, a space above the electrode assembly for gas disengagement and removal, a space below the electrode assembly for solid particles collection and means for impressing an electrolysis current thereon.

4,372,828
PROCESS FOR PREPARING ARSENIC ACID
Byung K. Ahn, Pittsburgh, Pa., assignor to Koppers Company, Inc., Pittsburgh, Pa.
Filed Feb. 11, 1982, Ser. No. 347,919
Int. Cl.[3] C25B *1/22*
U.S. Cl. 204—103 **9 Claims**

1. A process for the oxidation of As_2O_3 to $H_3 AsO_4$ in an electrolysis cell which comprises, periodically reducing the anode operating potential, in an amount and for a time sufficient to reactivate the anode so as to increase the current density in the cell.

4,372,829
METHOD AND APPARATUS FOR REMOVING METAL FROM A METAL-LADEN SOLUTION
Johnny C. Cox, Rte. 1, Box 227E, Oliver Springs, Tenn.
Filed Mar. 23, 1981, Ser. No. 246,330
Int. Cl.[3] C25C *1/22, 7/00*
U.S. Cl. 204—109 **7 Claims**

1. A method for recovery of metallic silver from a solution containing silver ions employing an electrolytic cell that includes a hollow anode disposed concentrically within a hollow cylindrical cathode comprising the steps of:

applying an electrolysis current to said anode and cathode, directing streams of said solution from outlets of a manifold located in the bottom region of said electrolytic cell, said outlets being radially spaced outwardly from said anode,

toward said cylindrical cathode and at an acute angle to the radius of said cylindrical cathode to develop a vortex carrying solution helically upwardly along said cathode for processing contact with said cathode; and

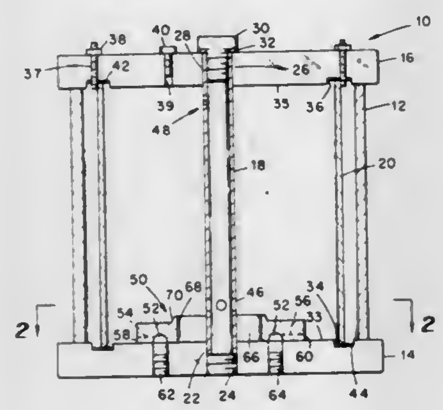

withdrawing a portion of said processed solution from the bottom region of said electrolytic cell through apertures located radially inwardly from said manifold outlets.

4,372,830
RECOVERY OF GOLD IN GOLD PLATING PROCESSES
Henry H. Law, Berkeley Heights, N.J., assignor to Bell Telephone Laboratories, Incorporated, Murray Hill, N.J.
Filed Mar. 18, 1982, Ser. No. 359,285
Int. Cl.[3] C25R *1/20*
U.S. Cl. 204—110 **15 Claims**

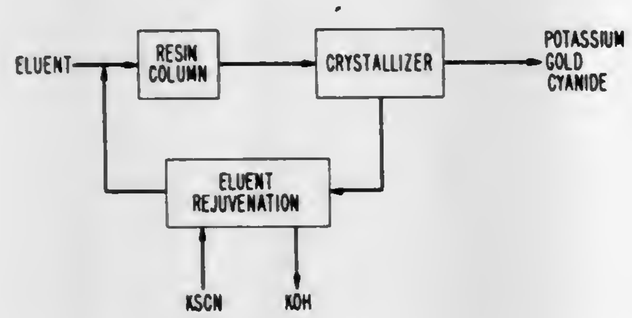

1. A process involving the use of gold in the form of gold cyanide ion dissolved in aqueous solution where gold cyanide ion is recovered from at least a portion of the aqueous solution by absorption on an anion-exchange resin and the gold is removed from the resin using an eluent characterized in that the eluent comprises at least 0.1 molar thiocyanate ion, 5–95 weight percent organic solvent and water and the organic solvent consists essentially of at least one organic compound selected from the group consisting of formamide, dimethylformamide, dimethylsulfoxide, dimethylacetamide, N-methyl-2-pyrrolidone, acetonitrile, acetone, tetrahydrofuran, diethylacetamide, diethylformamide, triethylphosphate, trimethylphosphate, tributylphosphate, dimethoxyethane, ethylamine, ethylenediamine, triethylamine, propylene carbonate, dioxane, pyridine and dioxolane.

4,372,831
ELECTROLYTE SOLUTION FOR ELECTROPOLISHING
Helmut Rosswag, Aalen, Fed. Rep. of Germany, assignor to Schenk-Filterbau Gesellschaft mit beschränkter Haftung, Waldstetten, Fed. Rep. of Germany
Filed Dec. 10, 1980, Ser. No. 214,635
Claims priority, application Fed. Rep. of Germany, Dec. 11, 1979, 2949807
Int. Cl.[3] C25F *3/24*
U.S. Cl. 204—129.8 **7 Claims**

6. An electrolyte solution for electropolishing metallic workpieces, said solution comprising:
a base electrolyte of concentrated mineral acid; and
at least one additive, in the form of a polyphosphate, added to said base electrolyte to prevent etching of the metal surface of the workpiece which is to be polished, said mineral acid for said base electrolyte being selected from the group consisting of phosphoric acid, sulfuric acid, nitric acid, perchloric acid, and mixtures thereof, and 800 ml/l of approximately 85% technical grade phosphoric acid, 100 ml/l of approximately 96% sulfuric acid, 100 ml/l water, 2.5 to 3 mg/l wetting agent, and 4 to 5 g/l polyphosphate.

4,372,832
POLLUTION CONTROL BY SPRAY DRYER AND ELECTRON BEAM TREATMENT
John R. Bush, Naperville, Ill., assignor to Research-Cottrell, Incorporated, Bridgewater Township, Somerset County, N.J.
Filed Jan. 21, 1981, Ser. No. 226,853
Int. Cl.[3] B01J *19/08*
U.S. Cl. 204—157.1 R **11 Claims**

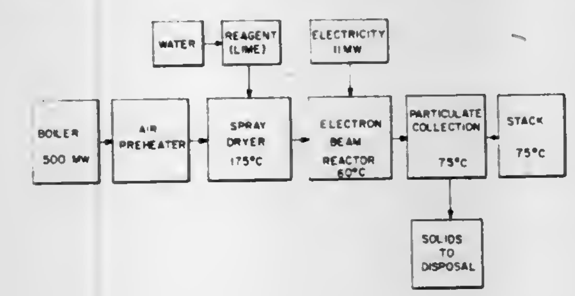

1. A process for removing pollutants including at least sulfur oxides and/or nitrogen oxides from effluent gas, the steps comprising;
(a) delivering the effluent gas into a spray dryer,
(b) injecting liquid and a reagent into the effluent gas in the spray dryer, thereby decreasing its temperature, and increasing its moisture content, and the reagent reacting with sulfur oxides in the effluent gas to form a reaction product, said reagent being injected only into effluent gas in the spray dryer;
(c) conveying the decreased temperature, increased moisture content, effluent gas including the reaction product and unreacted reagent into an irradiation chamber,
(d) irradiating the decreased temperature, increased moisture content, effluent gas in the irradiation chamber, thereby converting gaseous sulfur oxides and/or nitrogen oxides into mist and/or solid particles,
(e) subjecting the irradiated effluent gas to dry particulate collection, and wherein said reagent is a member of the group consisting essentially of:
lime,
limestone,
sodium compounds,
magnesium compounds,
or mixtures thereof.

4,372,833
PHOTOGENERATION OF ACTIVE FORMATE DECOMPOSITION CATALYSTS TO PRODUCE HYDROGEN FROM FORMATE AND WATER
Allen D. King, Jr.; Robert B. King, and Earl L. Sailers, III, all of Athens, Ga., assignors to University of Georgia Research Foundation, Inc., Athens, Ga.
Filed Apr. 14, 1981, Ser. No. 254,588
Int. Cl.[3] B01J *19/12*
U.S. Cl. 204—157.1 R **12 Claims**

1. A process for producing hydrogen from formate and water wherein an active formate decomposition catalyst is photogenerated from a transition metal carbonyl having a formula $M(CO)_6$ using near ultraviolet light under oxygen free conditions at a temperature of 45° C. and above.

4,372,834
PURIFICATION PROCESS FOR COMPOUNDS USEFUL IN OPTICAL FIBER MANUFACTURE
Robert L. Barns; Edwin A. Chandross, both of Berkeley Heights; Daniel L. Flamm, Chatham Township, Morris County; Louis T. Manzione, Summit, and Larry F. Thompson, Gillette, all of N.J., assignors to Bell Telephone Laboratories, Incorporated, Murray Hill, N.J.
Filed Jun. 19, 1981, Ser. No. 275,426
Int. Cl.[3] B01J *19/08*
U.S. Cl. 204—157.1 R **12 Claims**

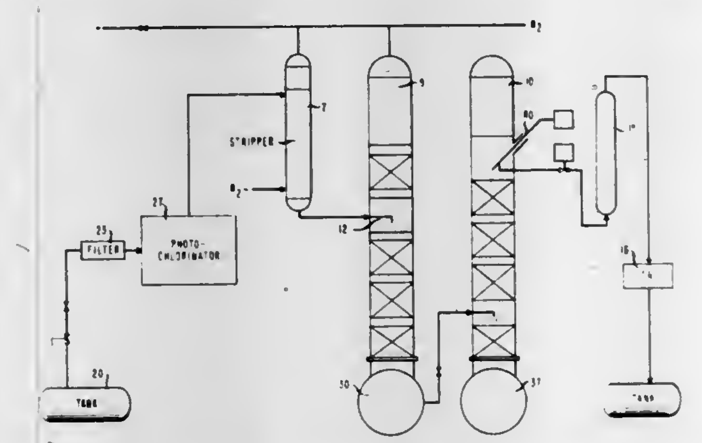

1. A process for purifying chloride glass formers employed in optical fiber fabrication comprising the steps of (1) photolchlorinating said chloride glass former by subjecting a source of chlorine and said chloride glass former to ultraviolet light for a desired reaction time wherein the product of the intensity of said ultraviolet light and the length of said reaction time is at least 5×10^5 μW sec/cm^2, (2) removing the bulk of the HCl gas formed by said photochlorination, (3) introducing said chloride glass former in a first distillation column under conditions where the reflux ratio of said first column is at least 8, and then (4) distilling the product from said first distillation column in a second distillation column and recovering the purified glass former from said second distillation column.

4,372,835
SILANE-FUNCTIONALIZED ULTRAVIOLET SCREEN PRECURSORS
Rack H. Chung, Clifton Park, and William D. Kray, Burnt Hills, both of N.Y., assignors to General Electric Co., Waterford, N.Y.
Division of Ser. No. 174,611, Aug. 1, 1980, Pat. No. 4,328,346. This application Jan. 28, 1982, Ser. No. 343,692
Int. Cl.[3] C08F *2/50*
U.S. Cl. 204—159.13 **7 Claims**

1. A radiation curable coating composition comprising:
(A) 100 parts by weight of an acid hydrolysis product of an alkoxy-functional silane;
(B) 10 to 1,000 parts by weight of
(i) an acryloxy-functional silane;
(ii) a glycidoxy-functional silane; or
(iii) a mixture of (i) and (ii);
(C) a catalytic amount of a photoinitiator; and
(D) from 2 to 15 parts by weight of a silane-functionalized ultraviolet agent precursor compound selected from compounds of the formulae:

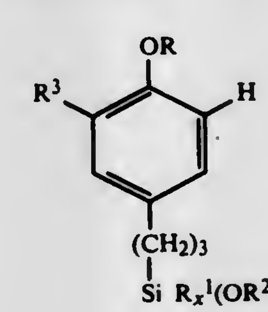
(i)

-continued

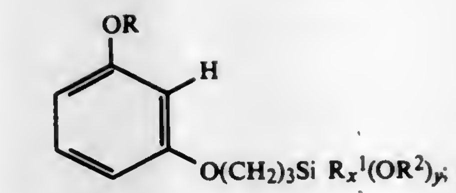
(ii)

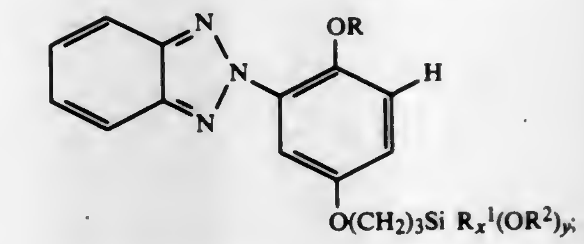
(iii)

(iv) a mixture of any of the foregoing, wherein R is

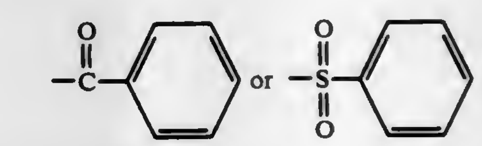

R^1 is C_1–C_6 alkyl, R^2 is C_1–C_6 alkyl or C_2–C_5 alkanoyl, R^3 is hydrogen or C_1–C_6 alkoxyl, x is 0, 1 or 2, y is 1, 2 or 3, and x+y=3.

4,372,836
LIGHT CURABLE ACRYLIC DENTAL COMPOSITION WITH CALCIUM FLUORIDE PIGMENT
Werner Schmitt; Robert Purrmann, both of Starnberg; Peter Jochum, Pilsensee, and Heinz-Joachim Hübner, Seefeld, all of Fed. Rep. of Germany, assignors to Espe Fabrik Parmazeutischer Praparate GmbH, Fed. Rep. of Germany
PCT No. PCT/DE79/00001, § 371 Date Jul. 31, 1979, § 102(e) Date Jul. 31, 1979
PCT Filed Jan. 2, 1979, Ser. No. 185,903
Claims priority, application Switzerland, Jan. 3, 1978, 38/78
Int. Cl.[3] C08F *2/50;* **C08K** *3/16*
U.S. Cl. 204—159.23 **7 Claims**

1. In an opaque, photopolymerizable dental filling material comprised of acrylic acid ester compounds comprised of mono or polyfunctional acrylic or methacrylic ester compounds, a photoinitiator and a white pigment, the improvement wherein said material comprises from 1–20 percent by weight of finely divided calcium fluoride as said white pigment, based on the weight of the filling material.

4,372,837
RADIAL FLOW ELECTROFILTER
Frederick D. Watson; Weldon D. Mayse, and Albert D. Franse, all of Houston, Tex., assignors to Petrolite Corporation, St. Louis, Mo.
Division of Ser. No. 85,367, Oct. 16, 1979, Pat. No. 4,302,310. This application Jun. 9, 1981, Ser. No. 271,879
Int. Cl.[3] B03C *5/00, 5/02*
U.S. Cl. 204—186 **19 Claims**

1. An electrofilter for removal of finely divided solids from liquids of low electrical conductivity comprising:
(a) a vertical cylindrical metallic vessel;
(b) a cylindrical porous bed of a dielectric filtering medium consisting of a non-conductive deformable material having voids and disposed centrally in said vessel, spaced apart from the walls of said vessel, thereby providing an annular space between said bed and said vessel walls;
(c) a plurality of annular parallel planar electrodes extending horizontally through at least a major portion of said bed;
(d) fluid inlet means to said vessel fluidly communicating with said annular space;

(e) tubular fluid collector means extending axially through at least a major portion of said bed;
(f) fluid outlet means fluidly communicating with said central tubular collector means; and
(g) conductor means for supplying electrical potential to at

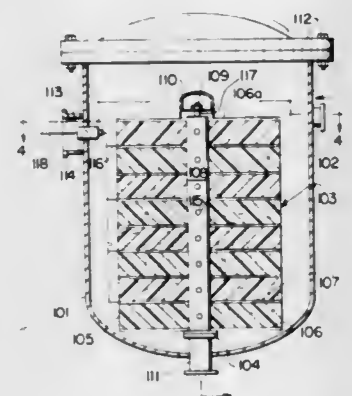

least alternately spaced said electrodes to create electric fields between adjacent electrodes; said porous bed of a dielectric filtering medium, said planar electrodes and said tubular fluid collector means, together with conductor means, constituting a filter pack removably mounted centrally in said vessel.

4,372,838
COAL LIQUEFACTION PROCESS
Conrad J. Kulik, Newark, and Howard E. Lebowitz, Mountain View, both of Calif., assignors to Electric Power Research Institute, Inc., Palo Alto, Calif.
Filed Mar. 26, 1981, Ser. No. 247,732
Int. Cl.[3] C10G *1/06, 1/00*
U.S. Cl. 208—10 **21 Claims**

1. A process comprising:
contacting a carbonaceous solid with a liquefaction solvent in the presence of gaseous hydrogen under liquefaction conditions in a liquefaction zone to produce a liquefaction effluent comprising a slurry of liquid and solid products;
admixing at least a portion of said liquefaction effluent with a process derived hydrogenation residuum;
separating distillables from said liquefaction effluent and process derived hydrogenation residuum to leave a liquefaction residuum, said distillables having a boiling temperature below about 1000° F.;
treating said liquefaction residuum to separate at least a portion of any solids comprising unconverted coal and mineral matter and form a substantially solids-free residuum;
fractionating said substantially solids-free residuum to form at least a light phase residuum and a heavy phase residuum;
admixing said heavy phase residuum with a process derived hydrogenation distillate to form a mixture, said hydrogenation distillate having a boiling temperature below about 1000° F.;
hydrogenating said mixture of heavy phase residuum and hydrogenation distillate in a hydrogenation zone to convert at least a portion of said heavy phase residuum into a hydrogenation distillate having a boiling temperature below about 1000° F. and leave a hydrogenation residuum;
recycling at least a portion of said hydrogenation distillate to provide said process derived hydrogenation distillate;
recycling at least a portion of said hydrogenation residuum to provide said process derived hydrogenation residuum; and
recovering any remaining hydrogenation distillate as a product.

4,372,839
PRODUCTION OF HIGH VISCOSITY INDEX LUBRICATING OIL STOCK
Stephen M. Oleck, Moorestown, and Robert C. Wilson, Jr., Woodbury, both of N.J., assignors to Mobil Oil Corporation, New York, N.Y.
Filed Jan. 13, 1981, Ser. No. 224,777
Int. Cl.[3] C10G *11/05, 45/12, 47/16*
U.S. Cl. 208—59 **19 Claims**

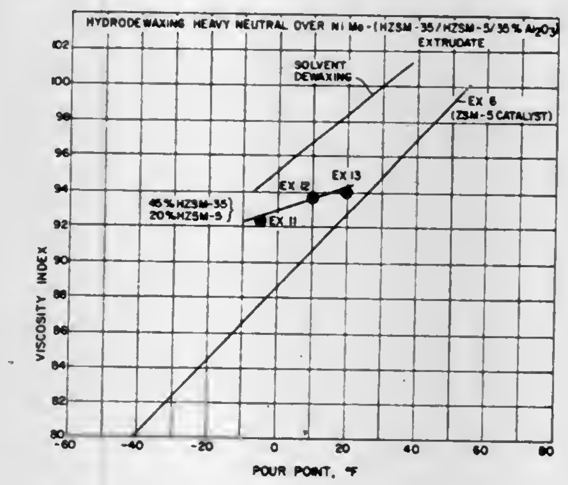

1. A process for catalytically dewaxing a waxy hydrocarbon fraction boiling within the approximate range of 450° to 1050° F. to provide a lubricating oil of high viscosity index which comprises contacting said fraction at a temperature between about 500° and about 675° F., a pressure between about 100 and about 3000 psig at a liquid hourly space velocity between about 0.1 and about 10 with a catalyst comprising two different types of crystalline aluminosilicate zeolites, one type which possesses particularly characterized pore openings defined by (1) a ratio of sorption of n-hexane to o-xylene, on a volume percent basis, of greater than 3, which sorption is determined at a P/P_o of 0.1 and at a temperature of 50° C. for n-hexane and 80° C. for o-xylene and (2) by the ability of selectively cracking 3-methylpentane in preference to 2,3-dimethylbutane at 1000° F. and 1 atmosphere pressure from a 1/1/1 weight ratio mixture of n-hexane/3-methylpentane/2,3-dimethylbutane mixture with the ratio of rate constants k_{3MP}/k_{DMB} being in excess of about 2 and the other type selected from the group consisting of ZSM-5 and ZSM-11 and mixtures thereof and recovering a dewaxed oil product.

4,372,840
PROCESS FOR REDUCING COKE FORMATION IN HEAVY FEED CATALYTIC CRACKING
Roby Bearden, and Gordon F. Stuntz, both of Baton Rouge, La., assignors to Exxon Research and Engineering Co., Florham Park, N.J.
Continuation-in-part of Ser. No. 108,396, Dec. 31, 1979, Pat. No. 4,280,896. This application May 4, 1981, Ser. No. 259,830
Int. Cl.[3] C10G *9/16, 11/18*
U.S. Cl. 208—113 **11 Claims**

1. A method for reducing the rate of coke and hydrogen production from a hydrocarbon feedstock cracked to lower molecular weight products in a reaction zone containing cracking catalyst of a catalytic cracking system comprising a reaction zone and a reduction zone where the feedstock contains at least one metal contaminant selected from the class consisting of nickel, vanadium, and iron, and where at least some of said metal contaminant becomes deposited on the catalyst such that at least 50 wt. % of the total of said metal contaminant deposited on the catalyst comprises only one of said metal contaminants, and where said metal contaminant contributes to excessive hydrogen and coke production, said method comprising:
A. monitoring the composition of said metal contaminant deposited on the catalyst;

B. adding an effective passivating amount of at least one of said metal contaminants not present as the major contaminant on the catalyst;
C. passing the coke and metal contaminated catalyst from the reaction zone to a regeneration zone maintained at regeneration conditions having a regeneration gas passing therethrough whereby at least a portion of the coke is removed from the catalyst and thereafter the catalyst is passed through a reduction zone maintained at an elevated temperature for a time sufficient to at least partially pas-

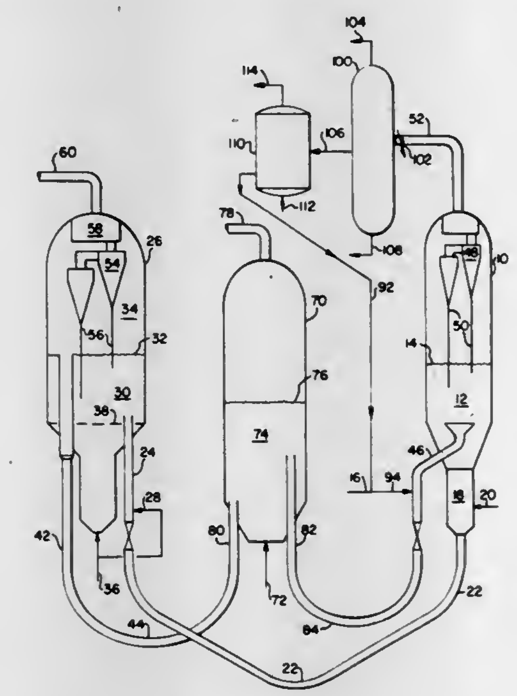

sivate said metal contaminants on the catalyst while a reducing environment is maintained in said reduction zone by the addition to the reduction zone of material selected from the class consisting of hydrogen, carbon monoxide and mixtures thereof; and,
D. adding a hydrogen donor material into the reaction zone whereby at least a portion of the hydrogen donor material transfers hydrogen to the hydrocarbon feedstock and/or to the cracked lower molecular weight products to decrease the rate of coke formation on the cracking catalyst.

4,372,841
PROCESS FOR REDUCING COKE FORMATION IN HEAVY FEED CATALYTIC CRACKING
Gordon F. Stuntz, and Roby Bearden, both of Baton Rouge, La., assignors to Exxon Research and Engineering Co., Florham Park, N.J.
Continuation-in-part of Ser. No. 108,395, Dec. 31, 1979, Pat. No. 4,280,895. This application May 4, 1981, Ser. No. 260,191
Int. Cl.[3] C10G *9/16, 11/18*
U.S. Cl. 208—113 **11 Claims**

1. A method for decreasing the rate of coke production from a hydrocarbon feedstock cracked to lower molecular weight products in a reaction zone containing cracking catalyst where the feedstock contains at least two metal contaminants selected from the class consisting of nickel, vanadium and iron and where at least some of the metal contaminants and coke become deposited on the catalyst, said method comprising:
(a) passing the coke and metal contaminated catalyst from the reaction zone to a regeneration zone maintained at regeneration conditions having a regeneration gas passing therethrough whereby at least a portion of the coke is removed from the catalyst and thereafter the catalyst is passed through a reduction zone maintained at a temperature above about 600° C. for a time sufficient to at least partially passivate the metal contaminants on the catalyst, a reducing environment maintained in the reduction zone by the addition to the reduction zone of a material selected from the class consisting of hydrogen, carbon monoxide and mixtures thereof, said passivated catalyst thereafter passing to the reaction zone without further processing; and
(b) adding a hydrogen donor material to the reaction zone whereby at least a portion of the hydrogen donor material transfers hydrogen to the hydrocarbon feedstock and/or to the cracked lower molecular weight products.

4,372,842
CATALYTIC HYDROCRACKING, HYDRODESULFURIZATION, AND/OR HYDRODENITROGENATION OF ORGANIC COMPOUNDS EMPLOYING PROMOTED ZINC TITANATE AND A ZEOLITE AS THE CATALYTIC AGENT
Lloyd E. Gardner, Bartlesville, Okla., assignor to Phillips Petroleum Company, Bartlesville, Okla.
Division of Ser. No. 145,639, May 1, 1980, Pat. No. 4,324,647. This application Jan. 18, 1982, Ser. No. 340,149
Int. Cl.[3] C10G *45/08, 45/10, 45/12*
U.S. Cl. 208—254 H **18 Claims**

1. A process for the catalytic hydrodenitrogenation of an organic nitrogen compound comprising the step of contacting said organic nitrogen compound under suitable hydrodenitrogenation conditions with a catalyst composition comprising zeolite, zinc, titanium, and at least one promoter selected from the group consisting of vanadium, chromium, cobalt, nickel, molybdenum, tungsten, rhenium, platinum, palladium, rhodium, ruthenium, and compounds thereof.

4,372,843
METHOD OF BENEFICIATING PHOSPHATE ORES CONTAINING DOLOMITE
James E. Lawver, Lakeland; Walter O. McClintock, Bartow, and Robert E. Snow, Lakeland, all of Fla., assignors to International Minerals & Chemical Corp., Terre Haute, Ind.
Filed Jun. 2, 1981, Ser. No. 269,449
Int. Cl.[3] B03D *1/06*
U.S. Cl. 209—12 **10 Claims**

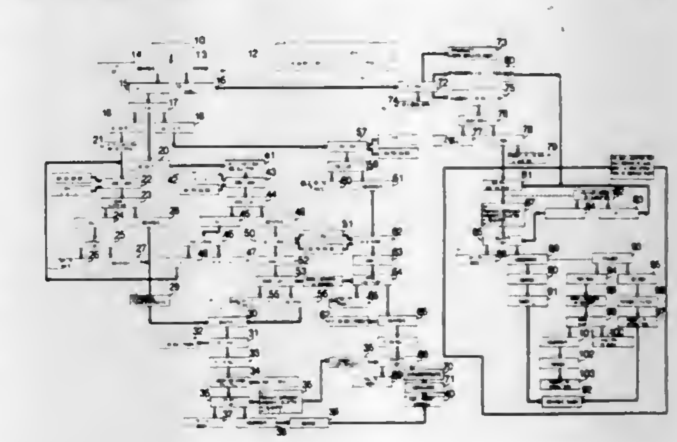

1. The method of beneficiating a phosphate ore matrix comprising francolite containing a major portion of the phosphate values in said phosphate ore, said ore also including silica and an alkaline earth metal carbonate impurity, the steps comprising:
(a) washing and sizing the ore matrix to deslime the matrix and to remove particles larger than about 6.7 mm;
(b) splitting the deslimed ore matrix into a pebble fraction in which the particles range in size from about 1 mm to about 6.7 mm; a fine fraction having a particle size from about 0.104 mm to about 0.350 mm; a coarse fraction ranging in size from about 0.350 mm to about 0.589 mm; and a fraction having a particle size in the range of 0.589 to 1 mm;
(c) subjecting that portion of the pebble fraction which contains more than about 45% BPL, less than 62% BPL and more than 1% MgO to a heavy media flotation, and thereafter grinding said pebble portion until at least 90%

of sink product will pass through a 42 mesh (Tyler) screen, and thereafter

(d) reagentizing said sink product with water, to about 20–30% solids based on the solids in said sink product, a pH regulator, a carbonate collector comprising a water soluble salt of a sulfonated linear fatty acid having a straight carbon chain from about eight to twenty-two carbons, and a direct carbon to sulfur bond and a phosphate depressant; and

(e) subjecting said reagentized sink product to a reverse flotation to float away the alkaline earth metal carbonate impurity, and collecting as the flotation cell underflow a phosphate concentrate.

4,372,844

AROMATIC AND BENZOTHIOPHENE EXTENDER OIL COMPOSITION FOR ORE FLOATATION

Clarence R. Bresson, and Robert M. Parlman, both of Bartlesville, Okla., assignors to Phillips Petroleum Company, Bartlesville, Okla.

Filed Jun. 29, 1981, Ser. No. 278,126

Int. Cl.³ B03D *1/14*

U.S. Cl. 209—166 **9 Claims**

1. A composition of matter useful as an extender oil in a flotation process for recovering phosphates and/or potash from ore containing the same, said composition comprising an extender oil having characteristics of viscosity at 100° F. in a range of about 40 to about 250 SUS and an aromatic content in the range of about 60 to about 85 weight percent of the total oil composition of which about 10 to about 20 weight percent of the total oil composition is chosen from the group consisting of benzothiophenes and dibenzothiophenes.

4,372,845

MULTIPLE HYDROCYCLONE SEPARATOR

Aurel J. Fecske, Huddinge, Sweden, assignor to Alfa-Laval AB, Tumba, Sweden

Filed May 28, 1980, Ser. No. 153,915

Claims priority, application Sweden, Jun. 1, 1979, 7904830

Int. Cl.³ B04C *5/28*

U.S. Cl. 209—211 **6 Claims**

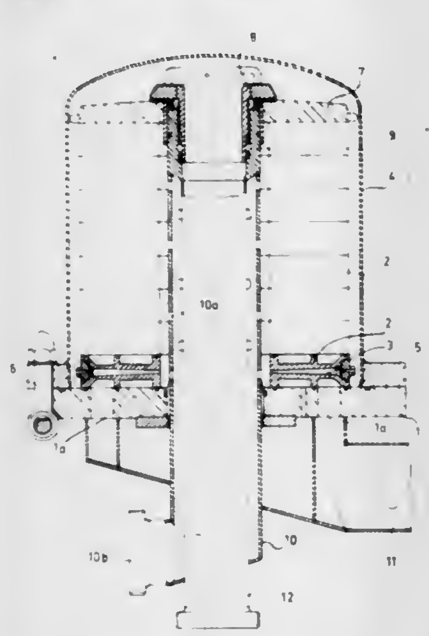

1. In a multiple hydrocyclone separator assembly, the combination of a housing having a generally vertical axis, a plurality of groups of cyclones mounted in the housing at different levels, inlet tube means connected directly to the bottom portion of the assembly for supplying a suspension to the cyclones, each cyclone extending radially from said axis and having at one end an outlet near said axis for discharging a first separated faction of the suspension and at the opposite end an outlet remote from said axis for discharging a second separated fraction of the suspension, and conduit means forming a tubular passage disposed centrally of the housing and extending vertically from said bottom portion of the assembly to a region in the top portion of the housing located above said cyclone groups, said central tubular passage forming an outlet path for said second fraction, the conduit means also forming an annular passage immediately surrounding said central passage and extending coaxially therewith, said annular passage forming an outlet path for said first fraction.

4,372,846

BLOOD PURIFICATION SYSTEM

Seiji Yamagami, Sakai; Hirohiko Nonaka, Oimachi; Tuneyoshi Shimonaru, Suita; Koichi Takashima, Kakogawa, and Yasuhiko Kato, Oimachi, all of Japan, assignors to Daicel Chemical Industries Ltd., Osaka, Japan

Filed Mar. 16, 1981, Ser. No. 244,319

Claims priority, application Japan, Mar. 22, 1980, 55/36751

Int. Cl.³ B01D *31/00*

U.S. Cl. 210—86 **8 Claims**

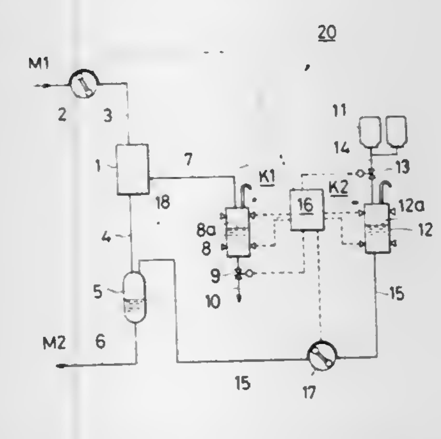

1. A system for purifying blood comprising filter means for purifying blood; filtrate metering means including a first small container, said first small container having an upper liquid level sensor and a lower liquid level sensor opposed to the side wall of the first small container, the first small container having an inlet channel connected to a filtrate outlet of the filter means and an outlet channel with a valve; blood flow adjusting means provided in an arterial channel for the filter means; a mixer provided in a venous channel of the filter means; a supply source for feeding a substitution fluid to purified blood; substitution fluid metering means including a second small container, said second small container having an upper liquid level sensor and a lower liquid level sensor opposed to the side wall of the second small container, the second small container having an inlet channel connected to the supply source and equipped with a valve and an outlet channel connected to the mixer; replenishment flow adjusting means provided in the outlet channel of the substitution fluid metering means; and control means electrically connected to the filtrate metering means, the substitution fluid metering means, the blood flow adjusting means and/or the replenishment flow adjusting means; the filtrate metering means being controllable to repeat the steps of filling the filtrate from the filter means into its container to a level above the position where the upper liquid level sensor detects the liquid level and thereafter discharging the filtrate from the container until the liquid level lowers to a level below the position where the lower liquid level sensor detects the liquid level, for the control means to calculate the volume of the filtrate discharged from the filter means based on the speed of rise of the liquid level between the upper and lower liquid level detecting positions, the substitution fluid metering means being controllable to repeat the steps of filling the substitution fluid into the second small container to a level above the position where the upper liquid level sensor detects the liquid level and thereafter running off the substitution fluid from the container until the liquid level descends to a level below the position where the lower liquid level sensor detects the liquid level, for the control means to calculate the volume of the substitution fluid supplied to the purified blood based on the speed of descent of the substitution fluid level, so that the blood is purified while one of the filtrate discharge volume and the substitution fluid supply volume is being controlled based on the other volume to maintain the two volumes in a ratio specified for the patient.

4,372,847

FUEL FILTER ASSEMBLY AND CARTRIDGE

Andrew D. Lewis, Livermore, Calif., assignor to Chicago Rawhide Manufacturing Company, Elgin, Ill.

Continuation of Ser. No. 161,863, Jun. 23, 1980, abandoned. This application Aug. 24, 1981, Ser. No. 295,546

Int. Cl.³ B01D *27/08*

U.S. Cl. 210—86 **13 Claims**

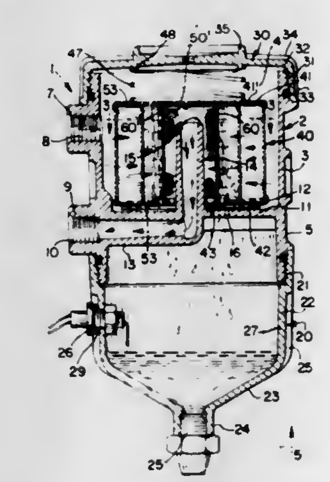

1. An assembly for removing contaminants from a fluid comprising

housing means forming a fluid receiving chamber,

said housing means having an inlet port for introducing a continuous fluid phase having particulate material and emulsified liquids to be removed to said fluid receiving chamber,

said housing means having an output port to direct the fluid to a utilization point,

cartridge means operatively positioned in said fluid receiving chamber and adapted to be selectively removed for replacement,

said cartridge means having at least two concentrically arranged annular sections to receive the fluid introduced through said inlet port in successive order and in a substantially radial inward direction,

the outer section of said annular sections including filtering means to filter the particulate material from said fluid introduced through said inlet port, said filtering means having a filter media disposed therein,

the inner section of said annular section including coalescing means to coalesce the emulsified liquids in said continuous fluid phase, said coalescing means having a coalescing material to cause said emulsified liquid to coalesce into droplets in the continuous fluid phase,

a separator assembly having an annular fine mesh screen, said screen being concentrically arranged within said coalescing means in spaced relationship thereto,

said separator preventing the passage of the droplets formed by said coalescing section and permitting the continuous fluid phase to pass therethrough,

said cartridge means being solely supported in substantially spaced relationship to said housing on an annular raised position creating sealed contact between the bottom of said cartridge means and said housing,

containment means coupled in fluid communication beneath said housing means to collect the coalesced liquid,

fluid passage means positioned within said separator and being in fluid communication with said outlet port to direct the continuous fluid phase passing through said separator to a utilization point, and

said fluid passage means includes a standpipe disposed within said separator assembly in concentric spaced relationship to said fine mesh screen.

4,372,848

OIL FILTER APPARATUS

Logan J. Manders, P.O. Box 284, Delmar, Del. 19940

Filed May 28, 1981, Ser. No. 268,524

Int. Cl.³ B01D *27/10*

U.S. Cl. 210—90 **11 Claims**

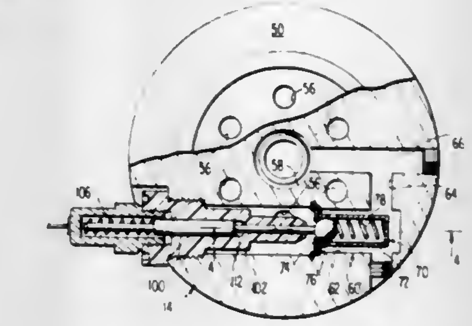

1. In an oil filter system, wherein system oil is pumped in a generally closed loop within a machine to be lubricated, an oil filter releasably mounted upon the machine said oil filter comprising a generally closed oil cannister having at least one oil inlet port fashioned through one end thereof and at least one oil outlet port fashioned through the same end thereof and an oil filter media mounted within the cannister such that system oil may be pumped from a first oil passage within the machine to be lubricated into the cannister via the at least one oil inlet port, through the oil filter media to filter the oil, out of the oil cannister and back into the machine via the at least one oil outlet port in the oil cannister and a second oil passage within the machine to be lubricated downstream of the first oil passage, the improvement comprising:

a disc element operable to be releasably mounted between the oil filter and the machine to be lubricated, said disc element having generally mutually parallel and opposing end surfaces and being operable to abut against and sealingly engage with compatible surfaces on the machine to be lubricated and the one end of the oil cannister respectively;

first disc passage means extending through said disc element from one of said opposing end surfaces to the other and in fluid communication at one end with said at least one oil inlet port into the oil cannister and in fluid communication at the other end with the oil passage within the machine to be lubricated;

second disc passage means extending through said disc element from one of said opposing end surfaces to the other and in fluid communication at one end with said at least one oil outlet port from the oil cannister and in fluid communication at the other end with the second oil passage downstream of the first oil passage, within the machine to be lubricated;

bypass passage means fashioned within said disc element and communicating said first disc passage means and said second disc passage means for permitting oil to bypass the oil filter element through the disc element;

a normally closed check valve positioned within said bypass passage means and having an upstream side in fluid communication with said first disc passage means and a downstream side in fluid communication with said second disc passage means, said check valve being operative to open in response to a predetermined pressure buildup within said first disc passage means;

means for detecting the opening of said check valve such as when a clogged filter element produces a predetermined pressure buildup upstream of said check valve;

warning signal means operably connected to said means for detecting the opening of said check valve; and

an electrical circuit including a transistor switch including a common ground transistor wherein the base of said tran-

sistor is connected to a ground potential through said check valve means.

4,372,849
HYDRAULIC PUMPING AND SWITCHING APPARATUS
Manfred Klauck, Lebach, Fed. Rep. of Germany, assignor to Flutec Fluidtechnische Gerate GmbH, Fed. Rep. of Germany
Filed Jul. 10, 1980, Ser. No. 167,355
Claims priority, application Fed. Rep. of Germany, Jul. 11, 1979, 2927971
Int. Cl.³ B01D *35/02*
U.S. Cl. 210—167 **8 Claims**

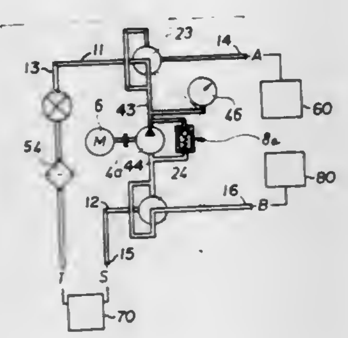

1. A hydraulic liquid pumping and switching apparatus for use with an operating liquid supply tank having two connections therewith and a clean liquid tank and a dirty liquid reservoir tank each having a connection therewith, the combination comprising:
a carrier piece; and
a motor, a pump, a filter and a switching device for the hydraulic liquid coupled to said carrier piece,
said switching device having means for selectively delivering hydraulic liquid to a first of the connections with the supply tank from the connection with the clean liquid tank across said filter, delivering hydraulic liquid from the second of the connections with the supply tank across said filter and back to the first of the connections with the supply tank, and delivering hydraulic liquid from the second of the connections with the supply tank to the connection with the dirty liquid reservoir tank without crossing the filter,
said means for selectively delivering comprising
a control housing,
a longitudinal blind bore extending in said control housing,
a pair of valves located in said blind bore,
means, coupled to said valves, for moving said valves to a plurality of positions,
a first set of transverse bores located in said control housing and providing liquid flow, respectively, between one of said valves and said pump, one of the connections with said supply tank and one of the connections with said dirty liquid reservoir tank, and
a second set of transverse bores located in said control housing and providing liquid flow, respectively, between the other of said valves and said pump, the other of the connections with said supply tank and the connection with said clean liquid tank.

4,372,850
REVERSE-PHASE THIN LAYER CHROMATOGRAPHIC PLATE
Tamotsu Okumura, Mino, and Tetsuro Kadono, Neyagawa, both of Japan, assignors to Shionogi & Co., Ltd., Osaka, Japan
Filed Apr. 9, 1981, Ser. No. 252,279
Claims priority, application Japan, Apr. 22, 1980, 55-53814
Int. Cl.³ B01D *15/08*
U.S. Cl. 210—198.3 **14 Claims**
1. A water-resistant thin layer chromatographic plate for reverse-phase thin layer chromatography, comprising: a base plate and a silica or alumina adsorbent wherein 10–40% of the hydroxyl groups of said adsorbent are tri-(lower alkyl)-silylated.

4,372,851
MULTI STAGE FLOCCULATION TREATMENT SYSTEM
Mikkel G. Mandt, Cedar Falls, Iowa, assignor to Clevepak Corporation, White Plains, N.Y.
Continuation of Ser. No. 109,136, Feb. 2, 1980, abandoned, which is a division of Ser. No. 868,801, Jan. 12, 1978, Pat. No. 4,206,052. This application Jul. 24, 1981, Ser. No. 286,712
The portion of the term of this patent subsequent to Apr. 26, 1994, has been disclaimed.
Int. Cl.³ C02F *1/52*
U.S. Cl. 210—199 **4 Claims**

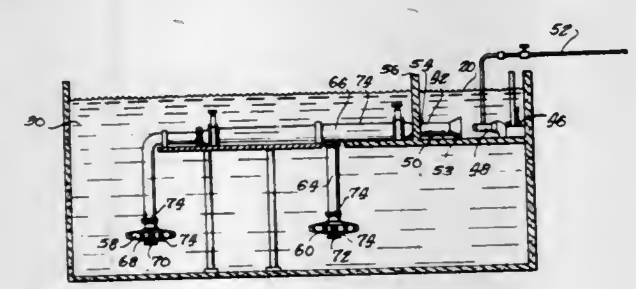

1. Multi-stage flocculation treatment apparatus including a first turbulent mixing zone adapted to thoroughly mix influent water to be treated with a flocculant chemical to form a mixed product stream, a second flocculation zone adapted to receive said mixed product stream in a manner to provide relatively low level mixing and to promote floc development, and partition means between said first and second zones;
said first turbulent mixing zone comprising
an induction zone adapted to contain influent water to be treated;
motive jet forming means adapted to receive a minor portion of said influent water under pressure and to discharge said water as a motive jet stream into said induction zone in a manner so as to induct a major portion of said influent water, together with said motive jet stream, into plug flow mixing means;
flocculant chemical introduction means adapted to introduce flocculant chemical into said motive stream at a point prior to, or adjacent to, its discharge from said motive jet forming means; and
plug flow mixing means adapted to receive and thoroughly mix said motive jet stream and inducted influent water to form a mixed product stream having residual energy from said motive jet stream;
said second flocculation zone comprising;
liquid retaining means adapted to retain mixed product for floc development; and
mixed product stream introduction means adapted to introduce said mixed product stream into said retaining means in a manner to utilize said residual energy to provide relatively low level mixing of mixed product within said retaining means; and
said partition means being adapted to maintain influent water to be treated in said first zone in isolation from said second zone, and further being provided with liquid conduit means adapted to permit flow of said mixed product stream from said first zone into said second zone.

4,372,852
MAGNETIC DEVICE FOR TREATING HYDROCARBON FUELS
Albert J. Kovacs, 1929 Fremont Ave., Apt. H, South Pasadena, Calif. 91030
Filed Nov. 17, 1980, Ser. No. 207,644
Int. Cl.³ B01D *35/06*
U.S. Cl. 210—222 **8 Claims**

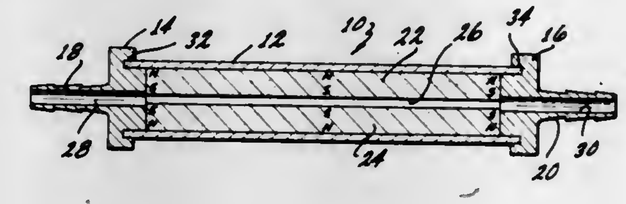

1. A magnetic device for treating hydrocarbon fuel, including
a hollow elongated casing of non-magnetic material,
the casing including a pair of end portions and with each end portion including a fitting for providing an inlet and outlet for the fuel,
a pair of elongated magnets and with each magnet magnetized to have one pole extending along one longitudinl face and the other pole extending along the opposite longitudinal face and with each longitudinal face having a particular width,
a pair of magnets located within the casing and retained in position by the inner walls of the casing and with faces of the magnets having like poles spaced from each other and substantially parallel to each other and with the distance between the spaced faces of the pair of magnets substantially smaller than the particular width of the spaced faces to form an elongated substantially rectangular cross-section passageway between the magnets for the fuel in communication with the inlet and outlet fittings and with the passageway being substantially free of any ferrous metal, and
the pair of magnets providing a substantially unipolar flux field on fuel flowing in the passageway between the magnets.

4,372,853
REMOVABLE, HERMETICALLY-SEALING, FILTER ATTACHMENT SYSTEM FOR HOSTILE ENVIRONMENTS
Glenn L. Mayfield, Richland, Wash., assignor to The United States of America as represented by the Department of Energy, Washington, D.C.
Filed Jun. 3, 1981, Ser. No. 269,459
Int. Cl.³ B01D *35/02*
U.S. Cl. 210—232 **15 Claims**
1. A removable filter attachment system, comprising:
(a) a filter medium having an end;
(b) an annular filter frame fixed to, and surrounding said filter medium, said filter frame having a first longitudinal axis and having a coaxially disposed, annular, first member surrounding said end;
(c) a reusable filter housing having an opening generally matching said end of said filter medium, having a second longitudinal axis, and having a coaxially disposed, annular, second member surrounding said opening, said first and second members together consisting of a rim and a matching, engageable groove;
(d) an environmentally resistant fusible material disposed in said groove, said fusible material having a melting point lower than that of said rim and lower than that of said groove, and said fusible material hermetically bondable, upon melting and resolidifying, with said rim and with said groove; and
(e) attached means operably associated with said rim and groove for electrically resistive heating said fusible material to its melting point without reaching the melting point

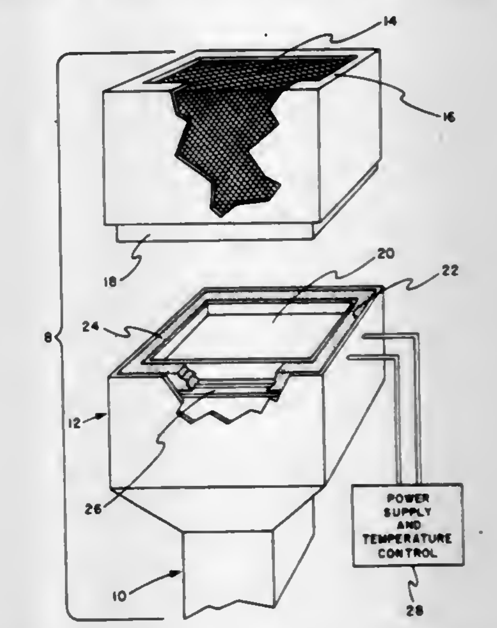

of said rim and without reaching the melting point of said groove.

4,372,854
DEVICE FOR REMOVING FLOATING LIQUID IMPURITIES, OIL, FROM A FLOWING WATER SURFACE
Pal Szereday, Budapest, Hungary, assignor to Novex Foreign Trade Co. Ltd. for Development and Commercialization of Inventions, Budapest, Hungary
PCT No. PCT/HU80/00007, § 371 Date Jul. 31, 1981, § 102(e) Date Jul. 31, 1981, PCT Pub. No. WO81/01720, PCT Pub. Date Jun. 25, 1981
PCT Filed Dec. 8, 1980, Ser. No. 290,806
Claims priority, application Hungary, Dec. 12, 1979, AI 291
Int. Cl.³ B01D *17/02*
U.S. Cl. 210—242.3 **3 Claims**

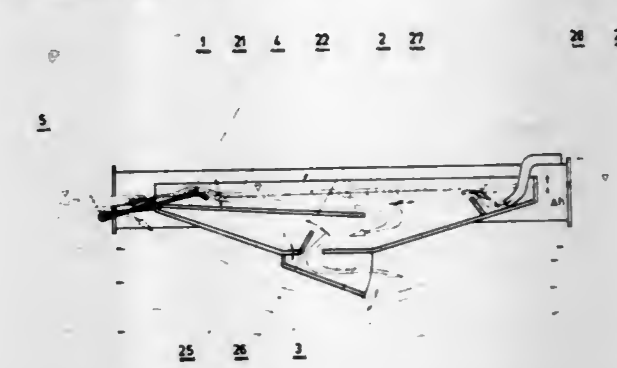

1. A device for removing floating liquid impurities, particularly oil, from a flowing or forced-flowing water surface, comprising: a structural unit partly submerged in water, and having wall elements surrounding a range of water level lowered in relation to said surface, a tank-like submersion body with a bottom of a submersion depth first increasing downstream and then gradually decreasing downstream from a front end provided with an adjustable spillway of vertically variable position as compared to said submersion body, connected to said front end, said submersion body having on its open front end facing the direction of water flow, a swirl restricting diffusion grid, running essentially parallel with the direction of water flow, position in or under the dividing level between the surface water layer to be separated, and an opening at the deepest point on the submersion body, said opening being of adjustable cross-section and located above the zone of greatest flowing speed and of smallest pressure, and a deflection hopper surrounding said opening and being adjustable for locally increasing the outside flowing speed.

4,372,855
FILTER DEVICE WITH AIR BLEED
Borje O. Rosaen, 4031 Thornoaks Dr., Ann Arbor, Mich. 48104, and Dale P. Fosdick, 7000 Austin Rd., Saline, Mich. 48176
Filed Apr. 29, 1981, Ser. No. 258,670
Int. Cl.^{3} B01D *29/10*
U.S. Cl. 210—316 9 Claims

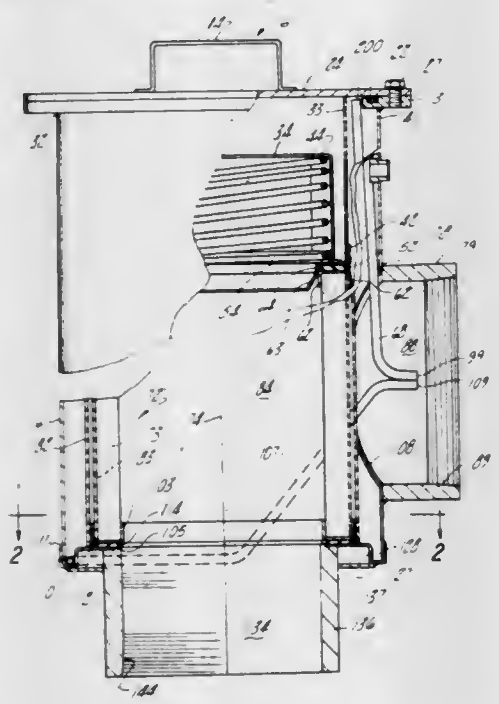

1. A fluid filtering device comprising:
a housing having an axis, said housing defining an interior chamber,
a fluid inlet port formed at one end of the housing and open to said chamber,
a fluid outlet port formed on the side of the housing and open to said chamber,
a filter element positioned within said chamber and fluidly between said fluid ports, said filter element dividing said interior chamber into an annular outlet chamber open to said outlet port and an inlet chamber open to said inlet port,
first air bleed means for evacuating air from said chamber and to said outlet port when the axis of said housing is substantially vertically oriented,
second air bleed means for evacuating air from said chamber and to said outlet port when the axis of said housing is substantially horizontally oriented, and
wherein said first and second air bleed means respectively comprise a first and second tube, said tubes being open at at least one end, said tubes being positioned in said outlet chamber and wherein the open end of each tube is positioned within the outlet port so that the open ends of said tubes face outwardly from said outlet port.

4,372,856
PROCESS AND SYSTEM FOR ANAEROBIC TREATMENT OF WASTE
Jon R. Morrison, Box 315, Rte. 1, Dewey, Ill. 61840
Filed Mar. 30, 1981, Ser. No. 249,265
Int. Cl.^{3} C02F *3/28*; B01D *21/06, 19/04*
U.S. Cl. 210—603 30 Claims

1. In an anaerobic digestive process, a method of purifying bio-gas comprising:
forming a slurry of waste and water;
introducing the slurry into a mix tank;
mixing while heating the slurry in the mix tank;
removing light and heavy nondigestible materials from the slurry;
collecting ammonia gas produced in the mixing process;
introducing the slurry into an anaerobic digest tank;
collecting bio-gas produced in the digestive process from the digest tank;
dissolving at least a part of the ammonia gas in a liquid contained in a scrub tank to prepare a scrubbing solution;

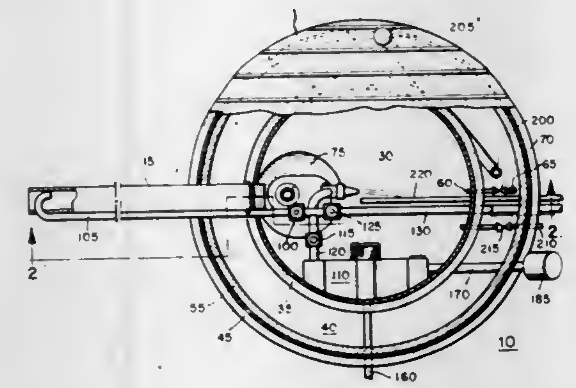

subsequently passing said bio-gas through said scrubbing solution in said scrub tank to remove carbon dioxide and hydrogen sulfide from said bio-gas; and
collecting said purified bio-gas.

4,372,857
LIQUID ADSORPTION PROCESS AND APPARATUS
William G. Matthews, Bridgewater, N.J.; Jean-Paul Sicard, Putnam Valley, and Richard A. Anderson, Katonah, both of N.Y., assignors to Union Carbide Corporation, Danbury, Conn.
Filed Mar. 5, 1981, Ser. No. 240,860
Int. Cl.^{3} B01D *15/00*
U.S. Cl. 210—673 15 Claims

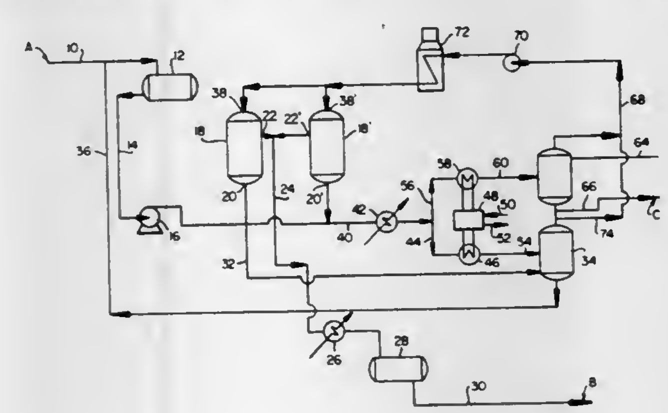

1. An adsorption process for separating an adsorbate comprising at least one more preferably adsorbable component from a feedstock liquid mixture containing a non-adsorbate comprising at least one less preferably adsorbable component from said feedstock, which comprises:
(i) providing in a first zone a first quantity of adsorbent material which preferentially adsorbs said adsorbate component of said mixture with respect to said non-adsorbate component;
(ii) providing in a second zone a second quantity of adsorbent material;
(iii) providing a relatively non-adsorbing, fluid permeable material in a third zone in contact with said first and second zones;
(iv) removing said adsorbate from said mixture by the steps of:
(a) flowing said feedstock mixture into said first zone;
(b) contacting said mixture with said first quantity of adsorbent material thereby preferentially adsorbing said adsorbate component of said mixture in said first quantity of adsorbent material, producing a non-adsorbate effluent essentially free of said adsorbate;
(c) discharging said non-adsorbate effluent through said third zone;

(v) regenerating the adsorbent materials
(a) substantially removing the non-adsorbed components of said mixture from said first and third zones;
(b) introducing a regenerating fluid, comprising a major proportion of a non-adsorbable gas and a minor proportion of a molecular species strongly adsorbable by said adsorbent material, into said second zone in a direction countercurrent to the direction of feedstock flow in step iv(a) thereby substantially removing said strongly adsorbable molecular species from said non-adsorbable gas into said second quantity of adsorbent material;
(c) passing the non-adsorbable gas from said second zone countercurrently through said third zone and said first zone thereby desorbing said adsorbate from said first zone of adsorbent material into the non-adsorbable gas; and
(d) discharging the non-adsorbable gas containing the desorbed adsorbate from said first zone.

4,372,858
METHOD OF REGENERATING ION EXCHANGERS
Günter Ritter, Melle, Fed. Rep. of Germany, assignor to Tetra Werke Dr. rer. nat. Ulrich Baensch Gesellschaft mit beschränkter Haftung, Melle, Fed. Rep. of Germany
Continuation of Ser. No. 180,704, Aug. 25, 1980, abandoned. This application Sep. 15, 1981, Ser. No. 302,593
Claims priority, application Fed. Rep. of Germany, Aug. 29, 1979, 2934863
Int. Cl.^{3} C02F *1/42*
U.S. Cl. 210—674 2 Claims

1. A method of regenerating an ion exchange resin used in the treatment of water while attaining a desired calcium to magnesium-ion ratio in the range of about 1.15 to 0.04 to 1 in the regenerated resin, the method comprising the steps of rinsing the loaded resin with a solution containing calcium and magnesium chelates of potassium salts of EDTA with the calcium and magnesium ions included in a selected mole ratio in the range of about 7.6 to 1 to about 0.2 to 1 whereby the calcium to magnesium ratio in the regenerated resin decreases as the amount of magnesium chelates increases.

4,372,859
METHOD OF REMOVING MINUSCULE SOLID PARTICLES FROM LIQUID AND SYSTEM THEREFOR
Yoshikazu Sugimoto; Kiyotaka Shirosaki; Masashi Kawaguchi, and Masaki Takeshima, all of Hitachi, Japan, assignors to Hitachi, Ltd. and Hitachi Kyowa Kogyo, Ltd., both of Tokyo, Japan
Filed Aug. 7, 1980, Ser. No. 176,201
Claims priority, application Japan, Aug. 10, 1979, 54-101252
Int. Cl.^{3} B01D *23/24*
U.S. Cl. 210—739 23 Claims

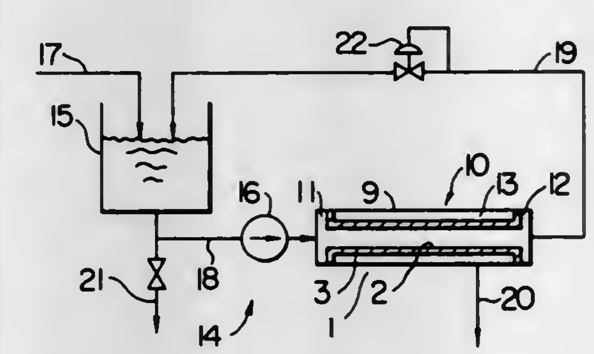

1. A method of removing minuscule solid particles from liquid comprising:
supplying a liquid to be processed containing minuscule solid particles to one end of at least one filter element open at opposite ends and formed with a multiplicity of tiny openings in a wall including a first surface and a second surface, to allow the liquid to flow along the first surface;
causing a portion of the liquid to flow through the tiny openings in the wall by reducing the pressure on the second surface of the wall of the filter element below the pressure on the first surface thereof, so that filtrate can be drawn off out of the second surface of the wall;
allowing the rest of the liquid to flow out of the filter element through the other end thereof; and
controlling the flow velocity F of the liquid flowing along the first surface and/or the flow velocity f of the filtrate flowing through the tiny openings in the wall toward the second surface in such a manner that the ratio F/f can be kept at a predetermined value.

4,372,860
METHOD AND AN APPARATUS FOR CLEANING WATER IN A SWIMMING POOL
Povl Kaas, Herning, Denmark, assignor to H. & P. Kaas System Teknik ApS, Herning, Denmark
Filed Feb. 24, 1981, Ser. No. 237,776
Int. Cl.^{3} C02F *1/32*
U.S. Cl. 210—748 11 Claims

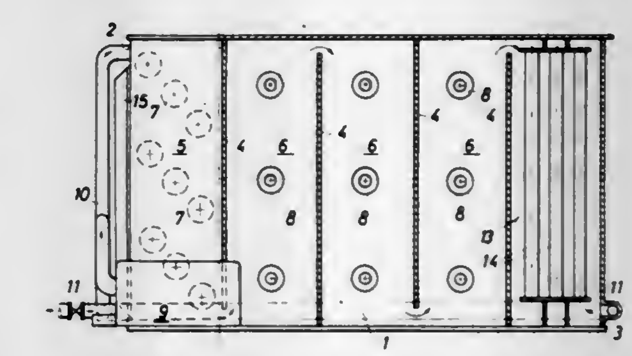

1. A method of cleaning chlorinated water in a swimming pool by circulating the water through a container, in which it is treated by ultraviolet radiation, characterized in that the water in the container is carried through a plurality of flow chambers connected in series in such a manner that in the first chamber the water is carried through a plurality of heating bodies located transverse to the flow, and in a plurality of succeeding flow chambers said water is treated by a plurality of ultraviolet radiation lamps with a predetermined radiation of light with the wave length $\lambda > 300$ nm.

4,372,861
GRAPHITE DISPERSION
Tai S. Chao, Olympia Fields; Aubrey C. Smith, Jr., Harvey, and Frederic D. Smies, Homewood, all of Ill., assignors to Atlantic Richfield Company, Philadelphia, Pa.
Filed May 4, 1981, Ser. No. 260,529
Int. Cl.^{3} C10M *1/20, 1/32*
U.S. Cl. 252—29 12 Claims

1. A method for improving the yield and stability of a graphite-in-oil dispersion comprising: grinding graphite powders to form graphite particles having an average diameter in the range of from about 2 microns to about 15 microns in the presence of an oxygen-containing atmosphere so that said graphite particles have an oxygen content in the range of about 1% to about 7% of total weight of the graphite particles including oxygen, and dispersing at least a portion of said graphite particles into an oil to form a graphite-in-oil dispersion wherein a dispersing amount is added during said dispersing of a dispersing agent selected from the group consisting of:
(i) a mono-succinimide of the following formula:

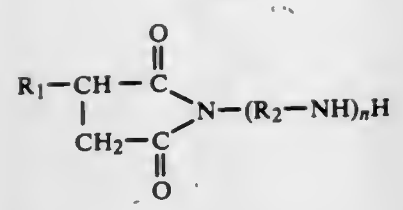

wherein:
n is in the range of about 0 to about 7;
R_1 is hydrocarbyl radical having a molecular weight in the range of from 400 to about 3000; and
R_2 is a hydrocarbyl radical having from about 2 to about 7 carbon atoms;
(ii) a bis-succinimide of the following formula:

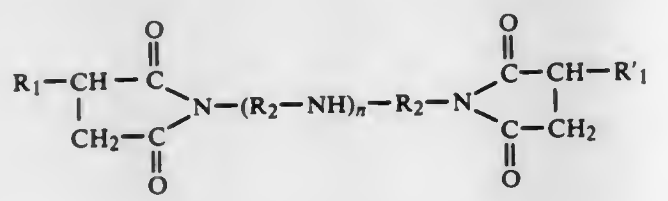

wherein:
n is in the range of about 0 to about 7;
R_1 and R_1' are independently selected hydrocarbyl radicals each having a molecular weight in the range of from about 400 to about 3000; and
R_2 is a hydrocarbyl radical having from about 2 to about 7 carbon atoms; and
(iii) a compound having the following formula:

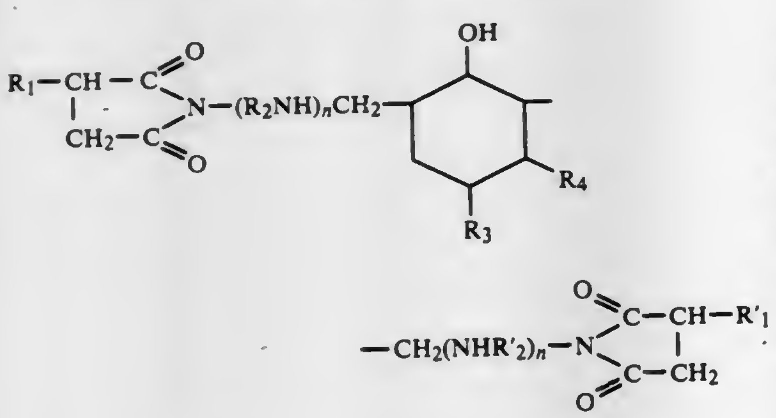

wherein:
n is in the range of from about 0 to about 7;
R_1 and R_1' are independently selected from the group of hydrocarbyl radicals having a molecular weight in the range of about 500 to about 5000;
R_2 and R_2' are independently selected hydrocarbyl radicals each containing from about 2 to about 7 carbon atoms; and
R_3 and R_4 are independently selected from the group consisting of hydrogen and a hydrocarbyl radical containing from about 1 to about 20 carbon atoms.

4,372,862
OIL-SOLUBLE METAL CONTAINING SULFONATED POLYMERS USEFUL AS OIL ADDITIVES
Harold N. Miller, Houston, Tex., assignor to Exxon Research & Engineering Co., Florham Park, N.J.
Filed Oct. 10, 1980, Ser. No. 195,847
Int. Cl.³ C10M *1/40;* **C10L** *1/24*
U.S. Cl. 252—33 **23 Claims**
1. A composition comprising
a major amount of a lubricating oil or a liquid petroleum fuel; and
a hydrocarbon soluble ethylene-containing ionic polymer useful as a V.I.-dispersant additive, having a number average molecular weight in the range of about 5000 to 1,000,000, substantially free of polar cosolvent, formed by sulfonating an aliphatic olefin polymer comprising about 30 to 84.5 mole % ethylene, about 15 to 69.5 mole % C_3 to C_{18} alpha olefin and about 0.5 to 20 mole % of C_5 to C_{14} diolefin, with a non-chlorine-containing sulfonating agent, to form sulfonic acid groups, said sulfonated polymer being at least partly neutralized with a metal compound wherein said metal is selected from the group consisting of multivalent metals,
wherein when said composition comprises a major amount of said lubricating oil, said composition contains 0.01 to 10 wt. % of said ionic polymer; and wherein when said composition comprises a major amount of said fuel, said composition contains 0.001 to 0.5 wt. % of said ionic polymer.

4,372,863
OIL COMPOSITIONS CONTAINING OIL-SOLUBLE, OXIDATIVELY AND MECHANICALLY DEGRADED ETHYLENE COPOLYMERS
Robert L. Elliott, Scotch Plains; Lawrence J. Engel, Green Brook, and J. Brooke Gardiner, Mountainside, all of N.J., assignors to Exxon Research & Engineering Co., Florham Park, N.J.
Division of Ser. No. 911,693, Jun. 1, 1978, abandoned, which is a continuation of Ser. No. 787,033, Apr. 13, 1977, abandoned. This application Oct. 2, 1979, Ser. No. 81,050
Int. Cl.³ C10M *1/32*
U.S. Cl. 252—51.5 A **6 Claims**
1. A lubricating oil composition comprising a major amount of lubricating oil and a viscosity index improving amount of an oil-soluble oxidatively and mechanically degraded ethylene copolymer having an ethylene content of from about 26–79 weight percent ethylene, from about 1.0–25 wt. % of a C_1–C_{21} alkyl norbornene and the balance being at least one C_3 to C_{18} alpha-olefin, said copolymer having a number average molecular weight (M_n) of at least 5,000; a molecular weight distribution as determined by the ratio of weight average molecular weight (M_w) to number average molecular weight (M_w/M_n) of less than 8; and, a thickening efficiency in the range of 1.0 to 3, when compared to polyisobutylene having a viscosity average molecular weight (M_v) of 20,000 and, an oxygen content of from about 0.005 to 6 wt. % based on the total weight of said copolymer.
4. A composition according to claim 1 wherein said copolymer is reacted with an amount of an amine compound selected from the group consisting of nitrogen compounds having the general formulae:

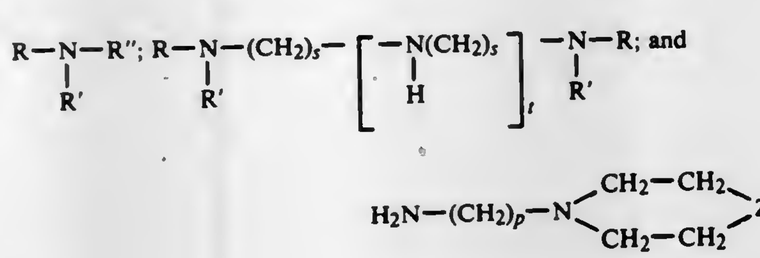

wherein R, R' and R" are independently selected from the group consisting of hydrogen; C_1 to C_{25} straight or branched chain alkyl radicals; C_1 to C_{12} alkoxy C_2 to C_6 alkylene radicals; C_2 to C_{12} hydroxy alkylene radicals; C_2 to C_{12} amino alkylene radicals; C_1 to C_{12} alkylamino C_2 to C_6 alkylene radicals; Z is O or N; G is from the group consisting of hydrogen and Ω-amino alkylene radicals of from 1 to 3 carbon atoms; s is a cardinal number of from 2 to 6; t is a cardinal number of from 0 to 10; and p is an integer of from 1 to 4 sufficient to provide a nitrogen content of said copolymer ranging from about 0.01 to 0.5 weight percent.

4,372,864
REAGENT FOR FROTH FLOTATION OF BITUMINOUS COAL
James R. McCarthy, 623 Nevin Ave., Sewickley, Pa. 15143
Filed Dec. 15, 1977, Ser. No. 860,899
Int. Cl.³ B03D *1/00*
U.S. Cl. 252—61 **4 Claims**
1. A bituminous coal floating reagent comprising:
a. liquid hydrocarbon having a paraffinic base for wetting bituminous coal in water,
b. a reducing material effective in an amount sufficient to establish a reducing environment around said bituminous coal for breaking any oxygen control on the surface thereof and to form hydrogen sulfide in acid water, the reducing material being phosphorous pentasulfide and
c. an activator material in an amount effective to provide a cation contained in the liquid hydrocarbon capable of establishing an electrostatic charge on said bituminous coal after any oxygen control on the surface has been broken.

4,372,865
CARBONATE/HYDROXIDE COPRECIPITATION PROCESS
Bu-Fan B. Yu, Butler, and Alex Goldman, Pittsburgh, both of Pa., assignors to Spang Industries, Inc., Butler, Pa.
Filed Sep. 26, 1980, Ser. No. 191,012
Int. Cl.³ C04B *35/38*
U.S. Cl. 252—62.62 **9 Claims**
1. Method for carbonate-hydroxide coprecipitation of materials for manufacture of magnetically soft ferrites and for controlling characteristics of such coprecipitated materials comprising
forming an aqueous metal ion solution of ferrous ions and divalent ions of at least one other metal in which the divalent metal ions of said at least one other metal are selected from the group consisting of Mn++, Ni++, Mg++, and Zn++,
providing a base solution of carbonates and hydroxides by combining in solution carbonate ion and hydroxide ion source materials selected from the group consisting of ammonium carbonate, ammonium bicarbonate, ammonium hydroxide, sodium carbonate, sodium hydroxide, potassium carbonate, and potassium hydroxide,
the base solution having a pH of about eleven,
combining such metal ion solution and such base carbonate and hydroxide ion solution to form a reaction liquor for precipitation of metal carbonates and metal hydroxides, the reaction liquor having a pH between about 7.5 and about 8.5, and
controllably limiting physical agitation applied in combining such metal ion and base solutions by limiting mixing times of such solutions between about five and about thirty seconds and controllably holding the resulting slurry of metal carbonate-hydroxide precipitate in mother liquor substantially free of applied physical agitation for a time sufficient to effect formation of spherical particles having a size between about one and about ten microns in diameter.

4,372,866
HEAT STORAGE MEDIUM OF NAOH-H_2O-TEO_2
Joern Ehlers, Uetersen, and Helmut Hankelt, Hamburg, both of Fed. Rep. of Germany, assignors to The British Petroleum Company Limited, London, England
Filed Jun. 3, 1981, Ser. No. 269,812
Claims priority, application Fed. Rep. of Germany, Jun. 3, 1980, 3020983; Japan, Jun. 3, 1980, 3020984
Int. Cl.³ C09K *3/18*
U.S. Cl. 252—70 **4 Claims**
1. A heat storage medium consisting of 70 to 74% by weight of sodium hydroxide, 30 to 26% by weight of water and 0.1 to 2.0% by weight of tellurium dioxide, expressed as a percentage

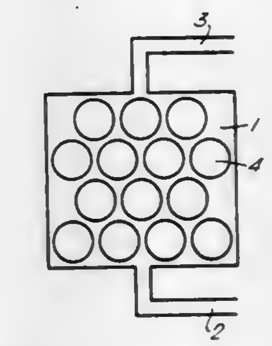

by weight of the combined weight of sodium hydroxide and water.

4,372,867
UPHOLSTERY CLEANING PAD AND METHOD OF MAKING THE SAME
Peter Taragos, 216 - 20th Ave., NE, Minneapolis, Minn. 55418
Filed May 11, 1981, Ser. No. 153,746
Int. Cl.³ C11D *17/00;* **B08B** *1/00*
U.S. Cl. 252—91 **2 Claims**

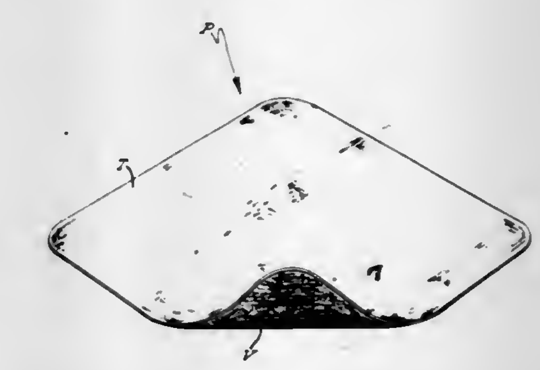

2. A multi-ply upholstery cleaning pad formed of a fabric having a terry cloth ply and a velour ply, said pad having been immersed in a collodial suspension containing predetermination amounts of sodium lauryl sulfate, sodium perborate, the suspension being maintained at room temperature during the time the fabric pad is immersed therein, the fabric pad being allowed to slowly partially dry to a damp condition and thereafter rapidly drying the pad to a dry condition, whereby the cleaning pad is permeated with a dried cleaning compounds.

4,372,868
PROCESS FOR THE PREPARATION OF A STABLE, READILY SOLUBLE GRANULATE WITH A CONTENT OF BLEACH ACTIVATORS
Herbert Saran; Martin Witthaus, both of Düsseldorf; Eduard Smulders, Hilden, and Karl Schwadtke, Leverkusen, all of Fed. Rep. of Germany, assignors to Henkel Kommanditgesellschaft auf Aktien, Düsseldorf-Holthausen, Fed. Rep. of Germany
Filed Mar. 20, 1981, Ser. No. 246,097
Claims priority, application Fed. Rep. of Germany, Mar. 28, 1980, 3011998
Int. Cl.³ C11D *3/30, 3/395, 11/00, 17/06*
U.S. Cl. 252—102 **30 Claims**
1. A process for preparing bleach activator granulates comprising from about 90 to 98 percent by weight of bleach activator and from about 10 to 2 percent by weight of granulating adjuvant, based on the weight of the anhydrous components, which consists essentially of the steps of:
(a) mixing for a time sufficient to form a homogeneous mixture powdered bleach activator which has a mean particle size of from about 0.01 to 0.8 mm with from about 50 to

100 percent by weight of the total granulating adjuvant to be used, which granulating adjuvant comprises a water-soluble cellulose ether, starch, or starch ether in the form of a free-flowing powder having a mean particle size of from about 0.01 to 0.8 mm;
(b) moistening the mixture from step (a) with water or an aqueous solution containing the remainder of the granulating adjuvant in a solution of from about 0.1 to 10 percent by weight, based on the weight of the total solution;
(c) granulating the moist mixture from step (b); and
(d) drying the moist granulate from step (c) at an elevated temperature not exceeding 100° C. until the moisture content is less than 2 percent by weight.

22. A bleach activator granulate prepared according to the process of claim 1.

23. A process of activating an aqueous solution of percompounds selected from the group consisting of hydrogen peroxide and water-soluble peroxyhydrates containing from 5 to 500 mg of active oxygen per liter of solution, which comprises incorporating into said solution a bleach activator granulate of claim 22.

4,372,869
DETERGENT COMPOSITIONS
Martin K. O. Lindemann, Bridgewater; Elvin R. Lukenbach, Somerset, and Robert J. Verdicchio, Succasunna, all of N.J., assignors to Johnson & Johnson Baby Products Company, New Brunswick, N.J.
Filed May 15, 1981, Ser. No. 263,954
Int. Cl.^{3} C11D *17/00*
U.S. Cl. 252—174.16 **7 Claims**

1. A detergent and cleansing composition wherein the active ingredient consists essentially of from about 1.0 to 20.0 % by weight of the total composition of a compound of the formula

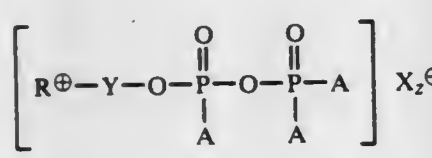
(I)

wherein
A is selected from —O, —OM and —O—Y—R with the proviso that at least one A is —O;
X is an anion;
z is an integer from 0 to 3;
R is an amidoamine moiety of the formula

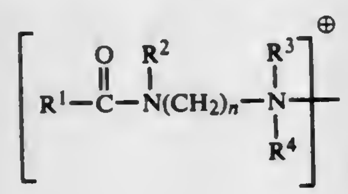

wherein:
R^1 is alkyl, alkenyl, alkoxy, or hydroxyalkyl of from 5 to 22 carbon atoms each, or aryl or alkaryl of up to 20 carbon atoms;
R^2 is hydrogen or alkyl, hydroxyalkyl or alkenyl of up to 6 carbon atoms each or cycloalkyl of up to 6 carbon atoms or polyoxyalkylene of up to 10 carbon atoms;
R^3 and R^4, which may be the same or different, are selected from alkyl, hydroxyalkyl, carboxyalkyl or up to 6 carbon atoms in each alkyl moiety, and polyoxyalkylene of up to 10 carbon atoms; in addition, R^3 and R^4 taken together with the nitrogen to which they are attached, may represent an N-heterocycle, in which the Y radical is bonded to a ring atom of said N-heterocycle other than the nitrogen of the R moiety;
n is an integer from 2 to 12;
Y is alkylene or alkylene interrupted by up to 3 oxygen atoms, of up to 12 carbon atoms, which alkylene chain may be substituted with lower alkyl, alkoxy, hydroxy or hydroxyalkyl, of not more than 10 carbon atoms each;
M is selected from the group of hydrogen, an organic radical selected from alkyl or hydroxyalkyl of up to 6 carbon atoms, polyhydroxyalkyl of up to 10 carbon atoms, cycloalkyl of up to 6 carbon atoms, aryl or arylalkyl of up to 10 carbon atoms, or a salt radical selected from alkali metals and alkaline earth metals.

4,372,870
METHOD AND COMPOSITION FOR TREATING AQUEOUS MEDIUMS
William R. Snyder, Warminster, Pa., and Diane Feuerstein, Old Greenwich, Conn., assignors to Betz Laboratories, Inc., Trevose, Pa.
Filed Jul. 24, 1981, Ser. No. 286,497
Int. Cl.^{3} C02F *5/14*
U.S. Cl. 252—180 **22 Claims**

1. Composition for treating an aqueous medium, said composition comprising an effective amount for the purpose of a water soluble polymer (I) comprising moieties (a) derived from an acrylic acid or water soluble salt thereof and moieties (b) of an hydroxylated lower alkyl acrylate, wherein the moieties of the polymer (I) have the following formula

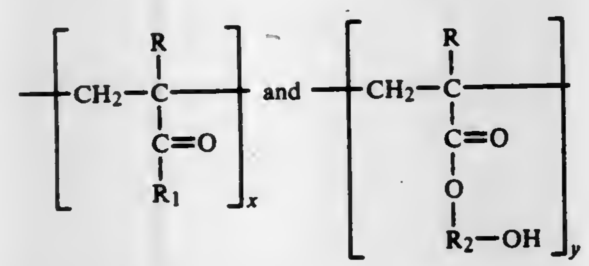

wherein R is hydrogen or a lower alkyl of from 1 to 3 carbon atoms; R_1 is OH, OM, or NH_2 where M is a water soluble cation; R_2 is a lower alkyl of from about 2–6 carbon atoms and the molar ratio of x to y is about 34:1 to 1:4, and an effective amount of a water soluble telomeric phosphinocarboxylic acid compound (II) of the formula

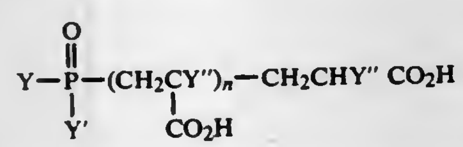

or salts thereof, wherein Y" is hydrogen or a methyl or ethyl residue; Y is hydrogen, a straight or branched alkyl residue having from 1–18 carbon atoms, a cycloalkyl residue having from 5–12 carbon atoms, an aryl residue, an aralkyl residue, a residue of the formula:

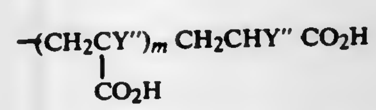

wherein Y" has its previous significance; and the sum of n and m is an integer of at most 100; or a residue -OX wherein X is hydrogen or a straight or branched alkyl residue having 1–4 carbon atoms and Y' is a residue -OX, wherein X has its previous significance and wherein the molar ratio of said polymer (I) to said phosphinocarboxylic acid compound (II) is about 10:1 to 1:10.

4,372,871
NEMATIC LIQUID CRYSTALS FOR DISPLAY DEVICES
Kazuhisa Toriyama; Tamihito Nakagomi, both of Mobara; Hisato Sato, Tokyo; Yutaka Fujita, Yokohama; Katsuhiko Morita, Urawa, and Yoshi Arai, Oyama, all of Japan, assignors to Dainippon Ink and Chemicals, Inc. and Hitachi Ltd., both of Tokyo, Japan
Division of Ser. No. 968,675, Dec. 12, 1978, abandoned. This application Nov. 5, 1980, Ser. No. 204,292
Claims priority, application Japan, Dec. 16, 1977, 52/150513
Int. Cl.^{3} C09K *3/34;* **G02F** *1/13*
U.S. Cl. 252—299.61 **12 Claims**

1. In a multiplexed twisted nematic liquid crystal display device, the improvement comprising as said nematic liquid crystalline composition a mixture of
A. at least one nematic liquid crystalline compound of the formula

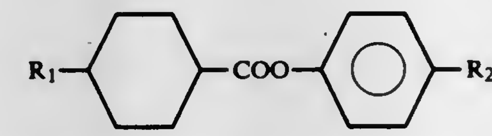

wherein R_1 represents n-C_mH_{2m+1}, R_2 represents n-C_qH_{2q+1}-O, and m and q each represent an integer of 1 to 10;

and at least one of the following components B, C and D:
B. at least one colorless, chemically stable nematic liquid crystalline compound having negative dielectric anisotropy of the general formula

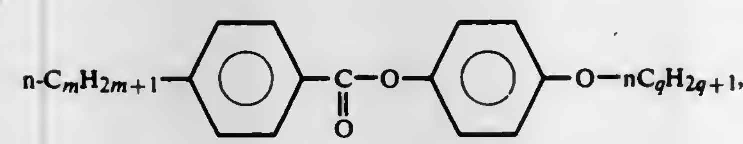

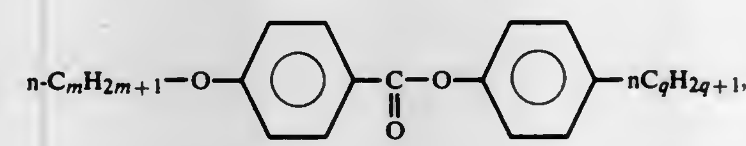

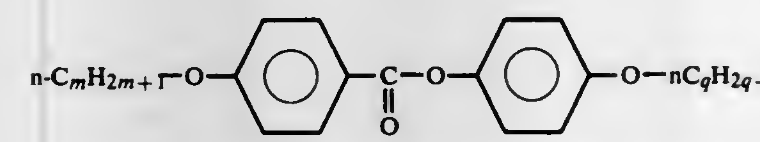

m and q each represent an integer of from 1 to 10, or a homolog thereof,
C. at least one colorless, chemically stable nematic liquid crystalline compound having large positive dielectric anisotropy selected from the group consisting of compounds of the general formulas

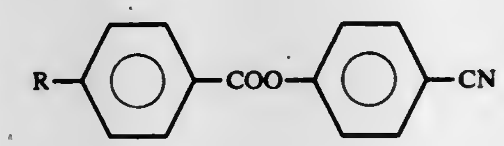

wherein R represents n-C_mH_{2m+1} or n-C_mH_{2m+1}-O, and m represents an integer of 1 to 10; compounds of the general formula

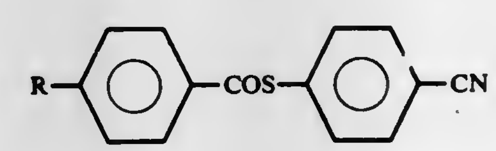

wherein R represents n-C_mH_{2m+1}, and m represents an integer of from 1 to 10, and compounds of the general formula

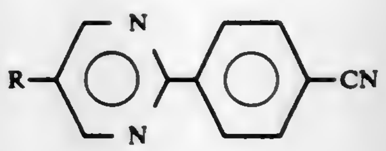

wherein R represents n-C_mH_{2m+1}, and m represents an integer of from 1 to 10, or homologs of said compounds; and
D. at least one colorless, chemically stable nematic liquid crystalline compound having small positive dielectric anisotropy selected from the group consisting of compounds of the general formulas

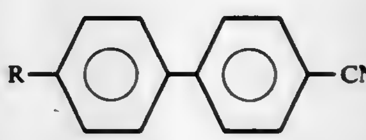

wherein R represents n-C_mH_{2m+1}, n-C_mH_{2m+1}-O, or

$n\text{-}C_mH_{2m+1}—\overset{O}{\overset{\|}{C}}—O$,

and m represents an integer of from 1 to 10, compounds of the general formula

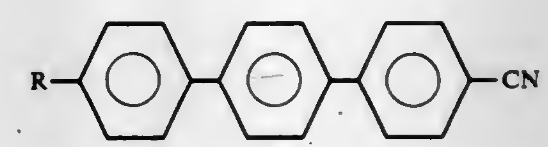

wherein R represents n-C_mH_{2m+1}, and m represents an integer of from 1 to 10, compounds of the general formula

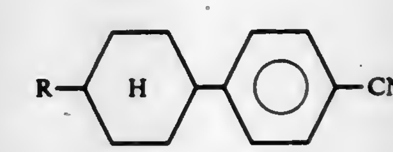

wherein R represents n-C_mH_{2m+1}, and m represents an integer of from 1 to 10, compounds of the general formula

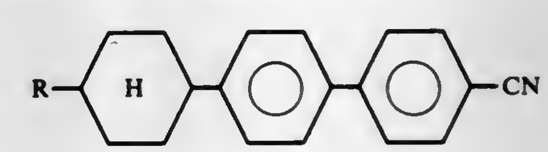

wherein R represents n-C_mH_{2m+1}, and m represents an integer from 1 to 8, compounds of the general formula

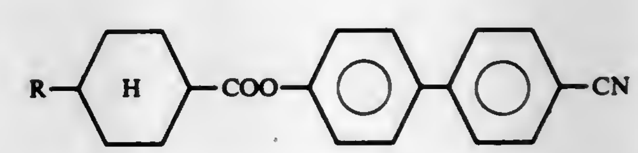

wherein R represents n-C_mH_{2m+1}, and m represents an integer of from 1 to 10, and compounds of the general formula

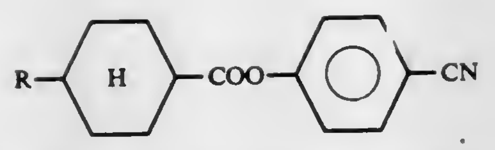

wherein R represents n-C_mH_{2m+1}, and m represents an integer of from 1 to 10,

or homologs of said compounds;

said mixtures comprising

(1) about 43.3% to about 60% by weight of A, about 21.7% to about 30% by weight of B, and about 10% to about 35% by weight of C,

(2) about 40% to about 90% by weight of A, 0% to about 30% by weight of B, and about 10% to about 40% by weight of D, or

(3) about 23.3% to about 49% by weight of A, 0% to about 19.5% by weight of B, about 10% to about 30% by weight of C and about 10% to about 60% by weight of D.

4,372,872

SULFUR SUSPENSIONS

Peter S. Backlund, Anaheim, Calif., assignor to Union Oil Company of California, Brea, Calif.

Filed Feb. 17, 1981, Ser. No. 234,465

Int. Cl.³ B01J *13/00*

U.S. Cl. 252—313 R **22 Claims**

1. A process for producing a suspension of sulfur particles which comprises the steps of (a) agitating an aqueous medium, contained within a vessel, with a high shear mixer; and (b) introducing sulfur into the agitated medium.

18. A suspension of sulfur particles in an aqueous medium prepared according to the process of claim 1.

4,372,873

VANADIUM-AMINE CORROSION INHIBITOR SYSTEM FOR SOUR GAS CONDITIONING SOLUTIONS

Edward C. Y. Nieh, Austin, Tex., assignor to Texaco Inc., White Plains, N.Y.

Filed Mar. 16, 1981, Ser. No. 244,446

Int. Cl.³ C09K *3/00*

U.S. Cl. 252—389 R **8 Claims**

1. A corrosion inhibited composition consisting essentially of

a. an aqueous alkanolamine solution in which the alkanolamine has the formula:

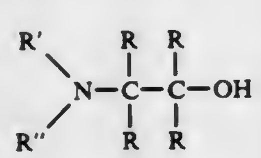

wherein R′ and R″ independently represent hydrogen or $—CR_2CR_2OH$ and wherein each R may be hydrogen or an alkyl radical of 1 or 2 carbon atoms, employed in CO_2 gas removal service,

b. an anion containing vanadium in the plus 4 or plus 5 valence state and having a concentration in the composition of at least 100 parts per million and

c. an amine co-inhibitor having a concentration in the composition of at least 0.4 weight percent and selected from the group consisting of N-aminoethylethanolamine, ethylenediamine, propylenediamine, piperazine, N-aminoethylpiperazine, methyliminobispropylamine and lower alkyl and N-hydroxyalkyl substituted derivatives thereof, where lower alkyl has one to four carbon atoms.

4,372,874

STABILIZATION OF HYDROLYSIS PRONE LABILE ORGANIC REAGENTS IN LIQUID MEDIA

Ivan E. Modrovich, 1043 Mesa Dr., Camarillo, Calif. 93010

Continuation-in-part of Ser. No. 722,565, Sep. 13, 1976, abandoned, Ser. No. 764,826, Feb. 2, 1977, Pat. No. 4,153,511, Ser. No. 775,833, Mar. 9, 1977, Pat. No. 4,310,624, and Ser. No. 919,159, Jun. 26, 1978, abandoned, which is a continuation-in-part of Ser. No. 775,833, , which is a continuation-in-part of Ser. No. 764,826, , which is a continuation of Ser. No. 667,857, Mar. 17, 1976, abandoned, and a continuation-in-part of Ser. No. 722,565, Sep. 13, 1976, abandoned. This application Nov. 13, 1980, Ser. No. 206,467

The portion of the term of this patent subsequent to May 8, 1996, has been disclaimed.

Int. Cl.³ C12N *9/00;* C09K *3/00;* G01N *33/48;* C12Q *1/00*

U.S. Cl. 436—176 **48 Claims**

1. A method for stabilizing a labile organic reagent which is unstable in aqueous media and stable in nonaqueous media, comprising in combination the steps of:

(a) dissolving at least one organic reagent selected from the group consisting of adenosine monophosphate, adenosine diphsophate, adenosine triphosphate, phosphoadenylic acid sulfate, adenosylmethionine, uridine diphosphate, cytidine diphosphate, coenzyme A, tetrahydrofolic acid, biotin, thiamine pyrophosphate, pryidoxal phosphate, nicotinamide mononucleotide, cell haemin, B_{12} coenzyme, NADP, NADPH, purine nucleotides, pyrimidine nucleotides, cholesterol, magnesium thymolphthalein monophosphate, dithioerythritol, dithiothreitol, N-acetyl cysteine, glutathione, mercaptoethanol, o-cresolphthalein complexone, N-acetyl cystine, gamma glutamyl-p-nitroanilide, bilirubin, paranitrophenyl phosphate, phenolphthalein monophosphate, glycerol phosphate, p-nitroanilide, p-nitrophenol, ascorbic acid, tetraphenylboron, phosphoenol pyruvate, B-NAD and hydrated $NADH_2$, in a water miscible organic solvent which is liquid at room temperature and which is nondegradatively reactive with such organic reagent to form a solution of such organic reagent in the organic solvent; and

(b) providing in contact with the solution at least one percent by weight of an inert, high surface area, particulate desiccant for entrapping water to provide a residual water content in the solution below about 0.5% by weight; and

(c) sealing the solution.

2. The method as recited in claim 1 further comprising the step of removing substantially all of the desiccant from the solution prior to sealing the solution.

24. The method as recited in claim 1 wherein the desiccant is not removed from the solution.

46. A product prepared by the method of claim 24 comprising the solution sealed with the desiccant.

4,372,875

METHOD FOR OBTAINING AND REUSING OF OXIDATION CATALYST IN THE WITTEN DMT PROCESS

Heinrich Bünger, Siegburg; Rudolf Cordes, and Gerhart Hoffmann, both of Niederkassel, all of Fed. Rep. of Germany, assignors to Dynamit Nobel Aktiengesellschaft, Troisdorf, Fed. Rep. of Germany

Continuation of Ser. No. 156,605, Jun. 5, 1980, abandoned. This application Dec. 1, 1981, Ser. No. 326,280

Claims priority, application Fed. Rep. of Germany, Jun. 12, 1979, 2923681

Int. Cl.³ B01J *31/40;* C07C *69/82*

U.S. Cl. 252—413 **15 Claims**

1. A process for obtaining and reusing a heavy metal oxidation catalyst in the production of dimethyl terephthalate by the extraction of high-boiling distillation residues, said residues being produced during the oxidation of mixtures which contain p-xylene and/or methyl p-toluate in the liquid phase with oxygen or an oxygen-containing gas at an elevated pressure and elevated temperature in the presence of the dissolved heavy metal oxidation catalyst, subsequent esterification of the oxidation product with methanol at elevated pressure and elevated temperature, and separation of the esterification product by distillation into a crude dimethyl terephthalate fraction, a fraction rich in methyl p-toluate, and a high-boiling distillation residue, with water or dilute aqueous solutions of low-molecular weight aliphatic monocarboxylic acids or alcohols and recycling of the extract which contains the heavy metal oxidation catalyst trimellitic acid and the monomethyl ester of trimellitic acid into the oxidation stage, optionally after concentration, characterized in that in the extract the quantitative ratio a/b of the concentration (a) in gram/liter of trimellitic acid plus the monomethyl ester of trimellitic acid to the concentration (b) in gram/liter of heavy metal oxidation catalyst is reduced to a value of no more than 1.8:1 and that in the oxidation stage the catalyst concentration c, expressed in p.p.m., is represented by the formula: $c=44\cdot(a/b)+d$, with 60 p.p.m.$\leq d \leq$300 p.p.m., and with the ratio of a/b having said value prior to the recycling of the extract.

4,372,876

ZEOLITE MOLECULAR SIEVE ADSORBENT FOR AN AQUEOUS SYSTEM

Santi Kulprathipanja, Hoffman Estates, and Richard W. Neuzil, Downers Grove, both of Ill., assignors to UOP Inc., Des Plaines, Ill.

Division of Ser. No. 217,946, Dec. 18, 1980, Pat. No. 4,333,769, which is a continuation-in-part of Ser. No. 146,533, May 2, 1980, Pat. No. 4,319,928. This application Mar. 1, 1982, Ser. No. 353,683

Int. Cl.³ B01J *20/18*

U.S. Cl. 252—430 **15 Claims**

1. An adsorbent comprising both a crystalline aluminosilicate and an inorganic matrix wherein said crystalline aluminosilicate is dispersed in said inorganic matrix, said adsorbent suitable for use in a process for the separation of a component from a feed mixture comprising an aqueous solution of a mixture of components by contacting said solution with said adsorbent, said adsorbent exhibiting an adsorptive selectivity towards said component, said adsorbent being coated with a cellulose ether to substantially reduce the disintegration of said adsorbent.

4,372,877

DI(ACYLPEROXY)-1,4-CYCLOHEXANE DIMETHANOL-BIS-CARBONATES

David Peterson, Hercules, Calif., assignor to U.S. Peroxygen Company, Richmond, Calif.

Filed Nov. 5, 1981, Ser. No. 318,308

Int. Cl.³ C07C *179/14*

U.S. Cl. 260—453 RZ **5 Claims**

1. Di(acylperoxy)-bis-carbonates of the formula:

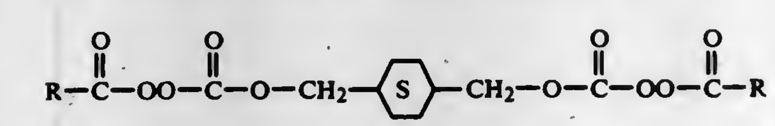

wherein each R has up to 20 carbon atoms and is alkyl or phenyl, wherein phenyl may contain alkyl, halo or alkoxy ring substituents.

4,372,878

PROCESS FOR THE PREPARATION OF AN ALUMINUM SILICATE CATALYST FOR CONVERTING METHANOL CONTAINING WATER AND/OR DIMETHYL ETHER CONTAINING WATER INTO LOWER OLEFINS

Friedrich Wunder, Flörsheim; Ernst I. Leupold, Neu-Anspach; Horst Hachenberg, Walluf; Hans-Joachim Schmidt, Königstein, and Klaus Unger, Seeheim-Jugenheim, all of Fed. Rep. of Germany, assignors to Hoechst Aktiengesellschaft, Frankfurt am Main, Fed. Rep. of Germany

Filed Mar. 2, 1981, Ser. No. 239,438

Claims priority, application Fed. Rep. of Germany, Mar. 4, 1980, 3008146

Int. Cl.³ B01J *29/06*

U.S. Cl. 252—455 Z **2 Claims**

1. A process for the preparation of a crystalline zeolite catalyst for converting methanol containing water and/or dimethyl ether containing water into lower olefins, which comprises silanizing a naturally occurring chabazite/erionite mixture and subsequently heating the product to 300° C. to 600° C. in the presence of oxygen or of gases containing oxygen.

4,372,879

LI-SPINEL CATALYST FOR NON-OXIDATIVE DEHYDROGENATION PROCESS

Gilbert R. Germaine, and Jean P. Darnanville, both of Grand Couronne, France, assignors to Shell Oil Company, Houston, Tex.

Filed Dec. 21, 1981, Ser. No. 333,007

Claims priority, application France, Dec. 29, 1980, 80 27673

Int. Cl.³ B01J *23/04, 23/22, 23/26, 23/78*

U.S. Cl. 252—470 **15 Claims**

1. A catalyst for the non-oxidative dehydrogenation at elevated temperatures in the presence of steam of hydrocarbons to the corresponding more-unsaturated hydrocarbons which comprises a composition having a spinel structure with lithium coordinated in the spinel structure, an alkali metal oxide not forming part of the spinel structure and a vanadium oxide not forming part of the spinel structure.

4,372,880

USE OF SUBSTITUTED 2-(1-METHYLBUTYL)-1,3-DIOXANES AS PERFUMING AGENTS

Horst Upadek, Erkrath, and Klaus Bruns, Krefeld-Traar, both of Fed. Rep. of Germany, assignors to Henkel Kommanditgesellschaft auf Aktien, Düsseldorf-Holthausen, Fed. Rep. of Germany

Filed Apr. 15, 1981, Ser. No. 254,516

Claims priority, application Fed. Rep. of Germany, Apr. 25, 1980, 3016007

Int. Cl.³ A61K *7/46*

U.S. Cl. 252—522 R **20 Claims**

1. A perfumery composition consisting essentially of from about 1 to 50 percent by weight of at least one substituted 2-(1-methylbutyl)-1,3-dioxane of the formula

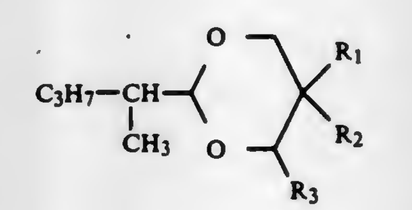

(I)

wherein R_1 is a hydrogen atom or a methyl or ethyl group; R_2 is a methyl, ethyl, n-propyl, isopropyl, n-butyl, or sec.-butyl group; and R_3 is a hydrogen atom or an n-propyl or isopropyl group, with the proviso that the sum of the carbon atoms of the radicals R_1, R_2, and R_3 is equal to or less than 6, as perfuming agent, and the remainder of customary constituents of perfumery compositions.

4,372,881

UNSATURATED ALICYCLIC COMPOUNDS, THEIR USE AS PERFUMING AND FLAVORING INGREDIENTS

Günther Ohloff, and Wolfgang K. Giersch, both of Bernex, Switzerland, assignors to Firmenich SA, Geneva, Switzerland

Filed Sep. 29, 1981, Ser. No. 306,827

Claims priority, application Switzerland, Oct. 16, 1980, 7729/80

Int. Cl.[3] C07C *45/66*; A61K *7/46*

U.S. Cl. 252—522 R 5 Claims

1. A compound of formula

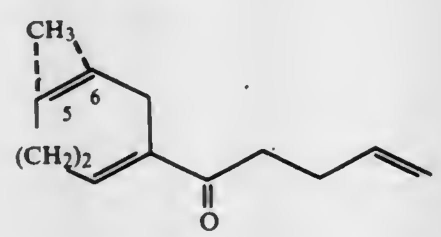

(I)

having a methyl radical bound to the carbon atom in position 5 or 6 of the ring.

4,372,882

DETERGENT COMPOSITION CONTAINING LOW LEVEL OF SUBSTITUTED POLYAMINES

Robertus J. C. Koster, Grimbergen; Volker Six, Strombeek-Bever, and Peter Hale, Brussels, all of Belgium, assignors to The Procter & Gamble Company, Cincinnati, Ohio

Filed Jun. 16, 1981, Ser. No. 274,128

Claims priority, application United Kingdom, Jun. 17, 1980, 8019680

Int. Cl.[3] C11D *3/30, 3/37, 11/03, 17/06*

U.S. Cl. 252—529 3 Claims

1. A method for preparing a granular detergent composition of enhanced soil release and cleaning properties, said composition comprising from about 2% to about 60% of a surface-active agent selected from the group consisting of anionic, nonionic, zwitterionic, and ampholytic detergents and mixtures thereof, and from 0.1% to 1.2% by weight of a polyamine having the formula

$$R-\overset{(R_1)_x}{\overset{|}{N}}-\left[(CH_2)_n-\overset{R_2}{\overset{|}{N}}\right]_m-(R_1)_z$$

wherein R is an alkyl or alkenyl group having 10 to 22 carbon atoms, the R_1's, which are identical or different, are ethylene oxide or propylene oxide, R_2 is hydrogen, C_1–C_4 alkyl or $(R_1)_y$, where x, y, and z are numbers such that the sum $(x+y+z)$ is in the range from 2 to about 25, n is a number from 1 to about 6, and m is a number from 1 to about 9, whereby a 1% aqueous solution of the composition has an alkaline pH (20° C.), said method comprising the steps of

(a) spray drying a slurry including the surface-active agent and not the polyamine to produce a base powder,

(b) spraying polyamine free of other detergent active ingredients onto a composition comprising the base powder.

2. A method as recited in claim 1, wherein the polyamine has the formula as set forth in claim 1 wherein R is hydrogenated C_{16-18} alkyl, R_1 is ethylene oxide, R_2 is ethylene oxide, n is 3, m is 1 or 2 and x, y, and z are each at least 1 and their sum is from 3 to 12, and is present in the composition in a level from 0.25% to 0.75%.

3. The product produced by the process of claim 2.

4,372,883

PROCESS FOR THE PRODUCTION OF VACCINE

Tyoku Matuhashi, Kawaguchi; Mitsuko Usui, Tokyo; Akio Yamamoto, Higashikurume; Masakazu Mitsuhashi, and Shunsaku Koyama, both of Okayama, all of Japan, assignors to Kabushiki Kaisha Hayashibara Seibutsu Kagaku Kenkyujo, Okayama, Japan

Filed Aug. 18, 1980, Ser. No. 178,904

Claims priority, application Japan, Sep. 5, 1979, 54-112848

Int. Cl.[3] A61K *39/385*; C07G *7/00*

U.S. Cl. 260—112 R 5 Claims

1. A process for the production of vaccine, consisting of the steps of:

covalently attaching a biologically toxic substance to a saccharide selected from the group consisting of pullulan, elsinan and partial hydrolysates of pullulan or elsinan having an average molecular weight of 500 to 1,000,000, to form a biologically toxic substance-saccharide conjugate in which the biologically toxic substance is detoxified; and

collecting the resultant conjugate.

4,372,884

PHARMACEUTICALLY ACTIVE PEPTIDES

Marvin R. Brown, San Diego; Jean E. F. Rivier, and Wylie W. Vale, Jr., both of La Jolla, all of Calif., assignors to The Salk Institute For Biological Studies, San Diego, Calif.

Continuation-in-part of Ser. No. 602,259, Aug. 6, 1975, abandoned. This application Apr. 8, 1976, Ser. No. 675,149

Int. Cl.[3] C07C *103/52*

U.S. Cl. 260—112.5 S 42 Claims

1. A pharmaceutically active compound, said compound being a peptide selected from the group consisting of

$$R_1\text{-}\overbrace{\text{Cys-Lys-}R_2\text{-Phe-Phe-D-Trp-Lys-Thr-Phe-Thr-Ser-Cys}}\text{-OH, and}$$

$$R_1\text{-Cys-Lys-}R_2\text{-Phe-Phe-D-Trp-Lys-Thr-Phe-Thr-Ser-Cys-OH,}$$

where R_1 is an acyl group derived from the group consisting of amino acids, dipeptides, tripeptides, pentapeptides, aliphatic, aromatic and cyclic organic acids having from 1 to 10 carbon atoms or hydrogen and R_2 is selected from Ala and Asn.

4,372,885

BISAZO DYES CONTAINING A 2-AMINO-SUBSTITUTED THIAZOLE RADICAL

Heinz Eilingsfeld, Frankenthal; Guenter Hansen; Guenther Seybold, both of Ludwigshafen, and Georg Zeidler, Dannstadt-Schauernheim, all of Fed. Rep. of Germany, assignors to BASF Aktiengesellschaft, Rheinland-Pfalz, Fed. Rep. of Germany

Filed Aug. 4, 1978, Ser. No. 931,248

Claims priority, application Fed. Rep. of Germany, Aug. 9, 1977, 2735751; Apr. 15, 1978, 2816505

Int. Cl.[3] C09B *31/14*; D06P *1/18, 3/36, 3/54*

U.S. Cl. 260—158 2 Claims

1. A compound of the formula:

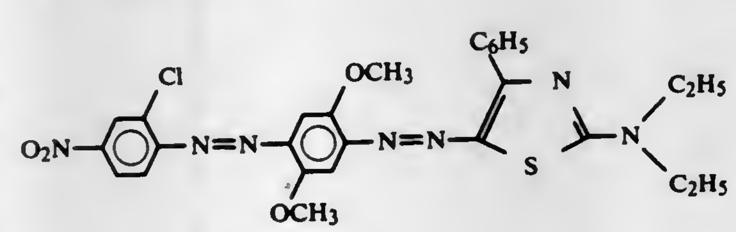

2. A compound of the formula:

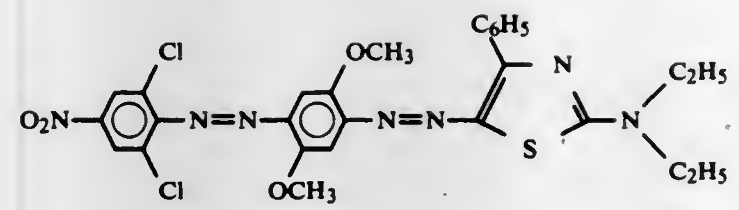

4,372,886

PROCESS FOR THE PRODUCTION OF CARBINOL BASES FROM INDOLINE COMPOUNDS

Rudolf Zink, Therwill, and Peter Loew, Münchenstein, both of Switzerland, assignors to Ciba-Geigy Corporation, Ardsley, N.Y.

Filed Jun. 1, 1981, Ser. No. 268,956

Claims priority, application Switzerland, Jun. 11, 1980, 4491/80

Int. Cl.[3] C09B *55/00*; C07D *211/72, 211/73*

U.S. Cl. 260—165 9 Claims

1. A process for the production of a carbinol base of the formula

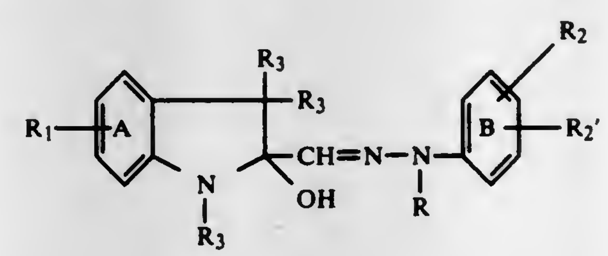

wherein

R is methyl or ethyl,

each R_3 independently is a C_1–C_4alkyl group,

R_1 is hydrogen or halogen,

R_2 is hydrogen, a C_1–C_4alkyl radical, a C_1–C_4alkoxy radical, a phenoxy radical, an azobenzene radical or a radical of the formula —O—$(CH_2)_n$—OR_4, wherein n is 1 or 2 and R_4 is a C_1–C_4alkyl radical, a phenyl radical, or, when n is 1, R_2 and R_2' are ortho to each other and together form a fused ring of formula —O—CH_2—OCH_2—, and otherwise R_2' is hydrogen

which process comprises alkylating 1 mole of a dye base of the formula

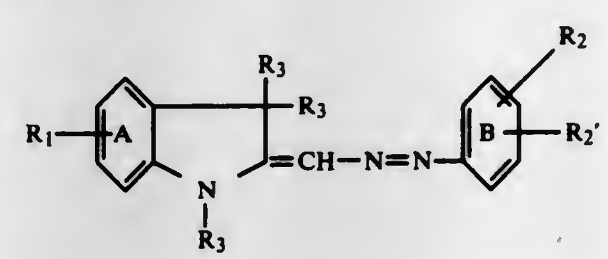

or an acid (HX) salt thereof

wherein X is any anion, in aqueous alkaline medium having a pH value of at least 10, with at least 2 moles of a compound that introduces the radical R.

4,372,887

IMINOPYRROLIDINYLINDOLES

Yao H. Wu, and Walter G. Lobeck, Jr., both of Evansville, Ind., assignors to Mead Johnson & Company, Evansville, Ind.

Division of Ser. No. 95,891, Nov. 19, 1979, Pat. No. 4,259,238, which is a division of Ser. No. 818,623, Jul. 25, 1977, Pat. No. 4,196,212, which is a division of Ser. No. 609,885, Sep. 2, 1975, Pat. No. 4,049,714, which is a division of Ser. No. 466,753, May 3, 1974, abandoned, which is a continuation-in-part of Ser. No. 255,701, May 22, 1972, Pat. No. 3,816,454, which is a continuation-in-part of Ser. No. 47,589, Jun. 18, 1970, abandoned. This application Nov. 24, 1980, Ser. No. 209,436

Claims priority, application Canada, Feb. 8, 1971, 104786; Apr. 11, 1973, 168449; Belgium, May 22, 1973, 131415; France, May 21, 1973, 73 188366; Fed. Rep. of Germany, May 21, 1973, 2325759; Japan, May 21, 1973, 48-55757; United Kingdom, May 22, 1973, 24380/73; Netherlands, May 22, 1973, 7126/73; United Kingdom, May 22, 1973, 16343/74

Int. Cl.[3] C07D *403/06*; A61K *31/40*

U.S. Cl. 548—468 6 Claims

1. A compound selected from the group consisting of iminopyrrolidinylindoles of Formula II

Formula II

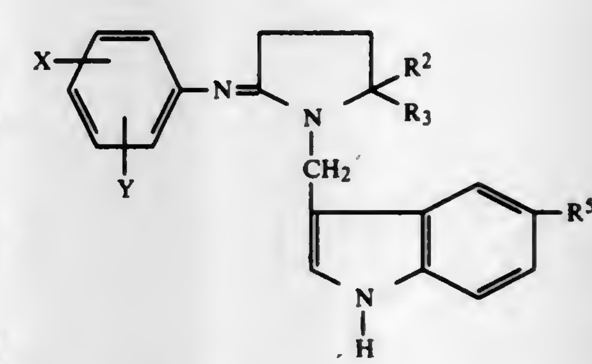

and pharmaceutically acceptable acid addition salts thereof wherein

X and Y are independently selected from the group consisting of hydrogen, halogen, trifluoromethyl, lower alkoxy of from 1 to 4 carbon atoms inclusive, lower alkyl of from 1 to 4 carbon atoms inclusive;

R^2 and R^3 are independently selected from the group consisting of hydrogen or lower alkyl of 1 to 4 carbon atoms inclusive; and

R^5 is hydrogen, halogen or lower alkoxy of from 1 to 4 carbon atoms inclusive.

4,372,888

NONDENATURING ZWITTERIONIC DETERGENTS

Leonard M. Hjelmeland, Bethesda, Md., assignor to The United States of America as represented by the Secretary of the Department of Health & Human Services, Washington, D.C.

Continuation-in-part of Ser. No. 181,465, Aug. 26, 1980, abandoned. This application Aug. 19, 1981, Ser. No. 294,203

Int. Cl.[3] C07J *9/00*

U.S. Cl. 260—397.1 6 Claims

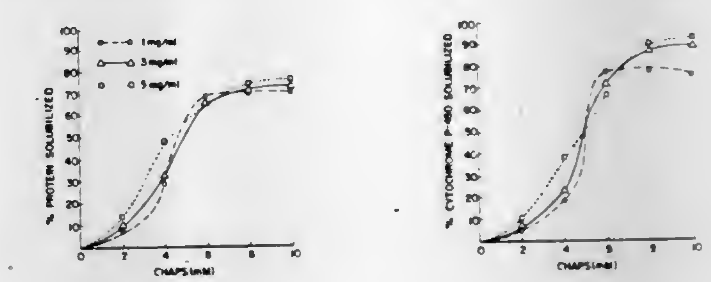

1. A nondenaturing zwitterionic detergent for protein consisting of an effective amount of 3-[(3-cholamidopropyl)dimethylammonio]-1-propanesulfonate in a water carrier.

6. A process for producing a nondenaturing zwitterionic detergent for protein derived from the reaction of an acid

selected from one member of a group of carboxylic acids consisting of cholic acid, deoxycholic acid, and dehydroabietic acid reacted with a polyethyleneamine selected from one member of the group consisting of

(1)
(2)
(3)
(4)

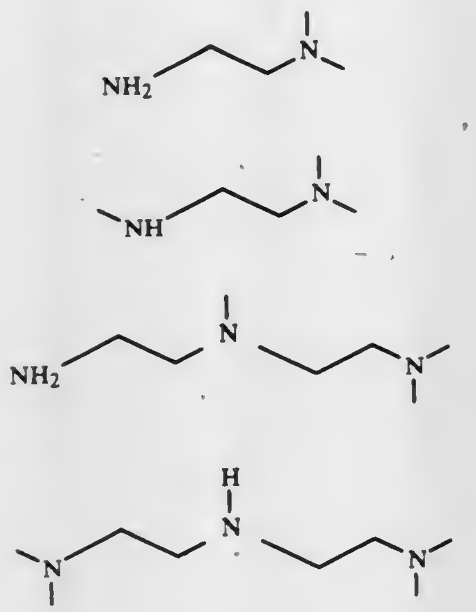

or reacted with a polypropyleneamine selected from one member of the group consisting of

(1)
(2)
(3)
(4)

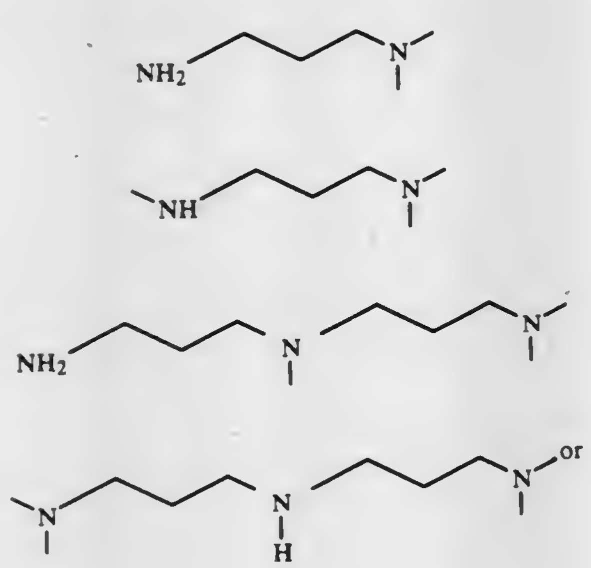

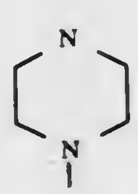

and reacted with an alkylating agent selected from one member of the group consisting of propanesultone, butanesultone, sodium 3-Cl,2-OH-propanesulfonate, sodium 2-Br-ethane sulfonate, and sodium chloroacetate wherein

(1) said carboxylic acid is reacted with an amine to form a triethylammonium salt in the solvent tetrahydrofuran;
(2) after the salt is completely dissolved, ethyl chloroformate is added and the flask is cooled to 0° C. and a precipitate forms which is triethylamine hydrochloride which is filtered away from the mixed anhydride;
(3) the product, mixed anhydride, reacts with a polyamine to form the polyamine derivative of a carboxylic acid amide as well as ethanol and carbon dioxide by products;
(4) the polyamine is reacted with an alkylating agent selected from one member of the group consisting of

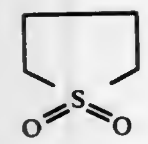
Propanesultone, (1)

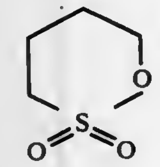
Butanesultone, (2)

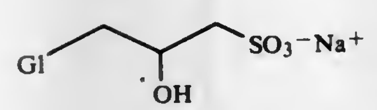
Sodium 3-Cl, 2-OH—, Propanesulfonate, (3)

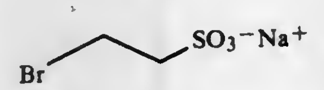
Sodium 2-Br Ethanesulfonate, or (4)


Sodium chloroacetate, (5)

to give the betaine.

4,372,889
PREPARATION OF CARBOXYLIC ACIDS
Nabil Rizkalla, River Vale, N.J., assignor to The Halcon SD Group, Inc., New York, N.Y.
Continuation-in-part of Ser. No. 219,786, Dec. 24, 1980, abandoned. This application May 28, 1981, Ser. No. 267,963
Int. Cl.³ C07C *51/14*
U.S. Cl. 260—413 **4 Claims**

1. A process for the preparation of a carboxylic acid which comprises reacting an olefin with carbon monoxide in the presence of water, in the presence of a molybdenum-nickel co-catalyst or a tungsten-nickel co-catalyst, in the presence of a halide and in the presence as a promoter of an organophosphorus compound or an organo-nitrogen compound wherein the phosphorus and nitrogen are trivalent.

4,372,890
PLATINUM COMPOUND
Chikao Yoshikumi, Kunitachi; Takayoshi Fujii, Tokyo; Kenichi Saito, Tokyo; Masahiko Fujii, Tokyo, and Koichi Niimura, Sayama, all of Japan, assignors to Kureha Kagaku Kogyo Kabushiki Kaisha, Tokyo, Japan
Filed May 21, 1981, Ser. No. 265,838
Claims priority, application Japan, Jun. 11, 1980, 55-78783
Int. Cl.³ C07F *15/00*
U.S. Cl. 260—429 R **6 Claims**

1. A platinum compound having a formula

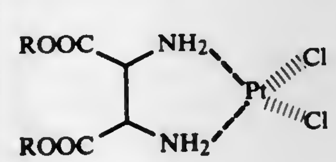

wherein R represents hydrogen atom, an alkali metal atom or a lower alkyl group.

4,372,891
METHOD OF RECOVERING PURE TOLUENE DIISOCYANATE FROM A POLYMERIC RESIDUE PRODUCT
Lloyd E. Hilbert, Kanawha Ter., St. Albans, W. Va. 25177, and Randall H. Samples, 1912 Springs Rd., Mt. Airy, N.C. 27030
Continuation of Ser. No. 74,934, Sep. 23, 1970, abandoned. This application Dec. 15, 1976, Ser. No. 750,901
Int. Cl.³ C07C *119/048*
U.S. Cl. 260—453 SP **8 Claims**

1. A method of recovering toluene diisocyanate from a residue product remaining after the original manufacturing process and resulting from the distillation of toluene diisocyanate down to levels of toluene diisocyanate where the residue in the original manufacturing process makes further evaporation impractical and containing residual toluene diisocyanate together with polymeric materials consisting essentially of the steps of: combining the residuel product with a solvent to dissolve the toluene diisocyanate while leaving the polymeric materials undissolved in suspension; said solvent consisting essentially of an aliphatic hydrocarbon in the molecular weight range between dodecane and hexane and a hydrocarbon from the group consisting of aromatic and chlorinated hydrocarbons having a boiling point approximating that of the said aliphatic hydrocarbon, the ratio of said aliphatic hydrocarbon to said aromatic hydrocarbons being in the range 90:10 and 10:90 and separating the dissolved toluene diisocyanate from the undissolved suspended polymeric materials by filtration.

4,372,892
PROCESS FOR THE PREPARATION OF 1-AMINOBENZENE-5-β-SULFATOETHYLSULFONE-2,4-DISULFONIC ACID, THE 5-VINYLSULFONE COMPOUND AND THE ALKALI SALTS THEREOF
Hermann Fuchs, Kelkheim; Gustav Kapaun, Neuenhain, and Fritz Meininger, Frankfurt am Main, all of Fed. Rep. of Germany, assignors to Hoechst Aktiengesellschaft, Frankfurt am Main, Fed. Rep. of Germany
Continuation of Ser. No. 127,790, Mar. 5, 1980, abandoned, which is a division of Ser. No. 703,530, Jul. 8, 1976, abandoned, which is a continuation-in-part of Ser. No. 514,921, Oct. 15, 1974, abandoned. This application Jun. 24, 1981, Ser. No. 276,807
Claims priority, application Fed. Rep. of Germany, Oct. 17, 1973, 2352058
Int. Cl.³ C07C *141/00, 143/58*
U.S. Cl. 260—458 C **2 Claims**

1. A process for preparing a compound of the formula

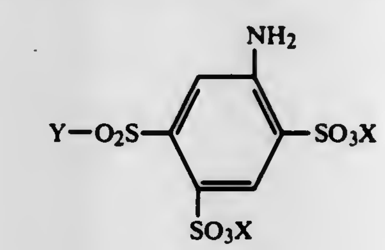

wherein Y is

$XO_3S—O—CH_2—CH_2—$

and X is hydrogen which comprises:

dissolving or suspending 1-aminobenzene-3-β-sulfatoethylsulfone or 1-aminobenzene-3-β-hydroxyethylsulfone in anhydrous sulfuric acid (monohydrate) at a temperature between about −15° C. and about +40° C. and subsequently adding to it a sulfuric acid/sulfur trioxide mixture having a mixture ratio of 30:70 to 90:10, in the temperature range indicated above, the amount of sulfur trioxide being such that the molar ratio of the starting aminobenzene compound to sulfur trioxide is about 1:2.5 to 1:6 where it contains the β-sulfatoethylsulfonyl group, or is about 1:3.5 to 1:7 where it contains the β-hydroxyethylsulfonyl group, and subsequently heating to a temperature of from about 100° to about 150° C.

4,372,893
METHOD FOR REDUCTION OF REDUCIBLE GROUPS
Heiner Eckert, Lerchenauerstr. 9, D-8000 München 40, Fed. Rep. of Germany
Filed Oct. 6, 1980, Ser. No. 194,333
Claims priority, application Fed. Rep. of Germany, Apr. 1, 1980, 3012674
Int. Cl.³ C07C *121/78, 85/11, 85/12*
U.S. Cl. 260—465 E **10 Claims**

1. Improved method for reduction of reducible groups containing C-atoms or N-atoms or a combination of these, which can be carried out selectively, preserving sensitive, reducible groupings, the improvement being that for optional selective reduction under normal pressure conditions of

(a) the NO_2, NO, or oximen group, there is used a metal macrocyclic in prereduced form, the metal macrocyclic being selected from the group consisting of:

(1) metallic phthalocyanine, especially of the general formula II

(II)

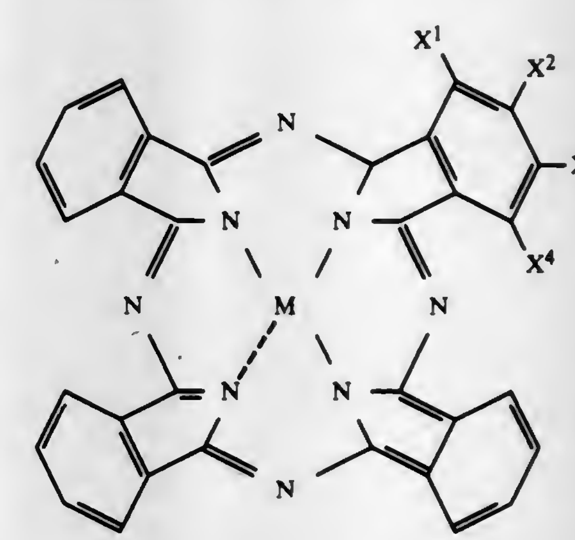

in which x^{1-4} represent H, halogens such as Cl, F, or cyano,

(2) a metalporphyrin of the general formula III

(III)

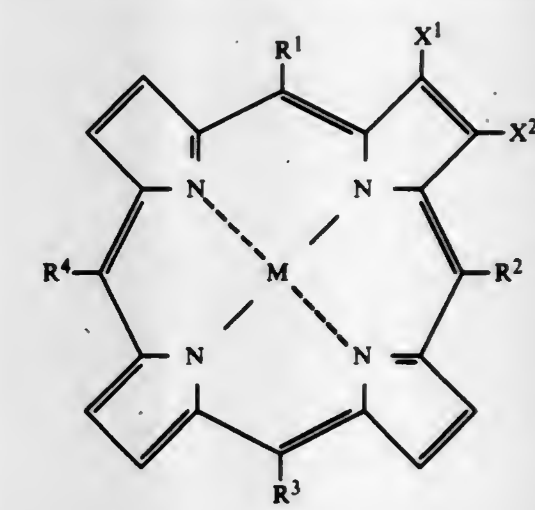

in which R^1 to R^4 represent H, phenyl or low alkyl and X^1, X^2 stand for H, halogens such as chlorine, bromine or cyano; and

(3) a mixed cycle of the general formula IV

(IV)

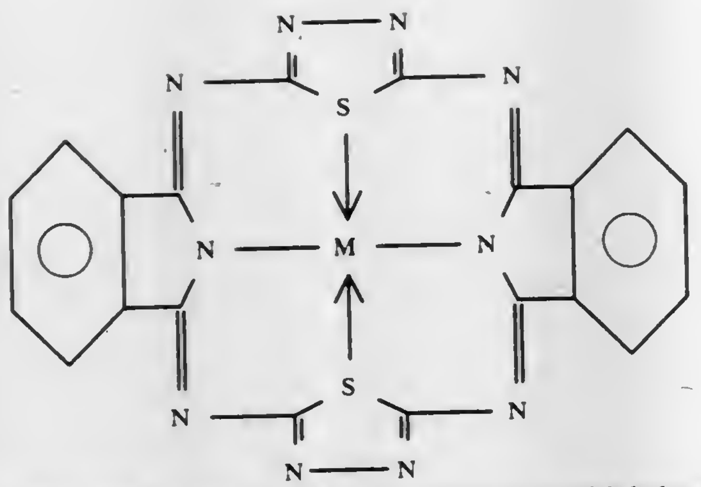

which can be substituted in the benzoid ring with halogens or cyano groups, the metal in the macrocyclic being Fe, Co, Ni, Mn, Ti, V or Cr, which may be in ion form, or

(b) the NO_2, NO, oxime groups and/or a double-bond, a combination of said metal macrocyclic is used with an additional reducing agent, said additional reducing agent being a sodium boranate, lithium alanate or a reaction product thereof with alcohol or hydrogen, when said metal macrocyclic is one of the formula II.

4,372,894
PHOSPHONOFORMIC ACID ESTERS

Ake J. E. Helgstrand; Karl N. Johannson, both of Enhörna; Alfons Misiorny, Bandhagen; Jan O. Noren, Grödinge, and Göran Stening, Söödertälje, all of Sweden, assignors to Astra Läkemedel Aktiebolag, Södertälje, Sweden

Continuation-in-part of Ser. No. 971,689, Dec. 2, 1979, abandoned. This application Nov. 13, 1979, Ser. No. 93,166
Claims priority, application United Kingdom, Dec. 22, 1977, 53580/77; Dec. 22, 1977, 53581/77; Dec. 22, 1977, 53582/77; Dec. 22, 1977, 53583/77; Jul. 3, 1978, 28548/78; Jul. 3, 1978, 28552/78; Jul. 3, 1978, 28553/78; Jul. 3, 1978, 28555/78
Int. Cl.[3] C07F *9/40;* A61K *31/66*
U.S. Cl. 260—941 18 Claims

1. A compound of the formula

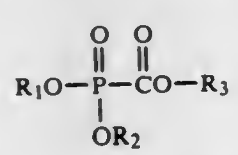

I

wherein one of R_1 and R_2 is H and the other of R_1 and R_2 is a phenyl group of the formula

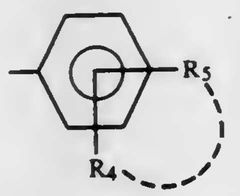

II

wherein R_4 and R_5 are the same or different and each is selected from the group consisting of hydrogen, halogen, alkyl having 1, 2, or 3 carbon atoms, alkoxy having 1, 2, or 3 carbon atoms, alkoxycarbonyl having 2–7 carbon atoms; and alkylcarbonyl groups having 2–7 carbon atoms; or R_4 and R_5 together form a straight saturated alkylene chain having 3 or 4 carbon atoms and being bound to adjacent positions, i.e. 2,3- or 3,4- in the phenyl ring and R_3 is H; and physiologically acceptable salts and optical isomers thereof.

2. A compound of the formula

(I)

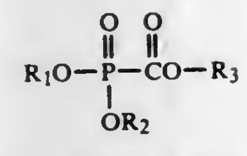

wherein one of R_1 and R_2 is H and the other of R_1 and R_2 is a phenyl group of the formula

(II)

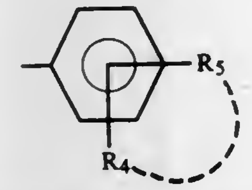

wherein R_3 is a phenyl group of formula II, wherein R_4 and R_5 are the same or different and each is selected from the group consisting of hydrogen, halogen, alkyl having 1, 2, or 3 carbon atoms, alkoxy having 1, 2, or 3 carbon atoms, alkoxycarbonyl having 2–7 carbon atoms; and alkylcarbonyl groups having 2–7 carbon atoms; or R_4 and R_5 together form a straight saturated alkylene chain having 3 or 4 carbon atoms and being bound to adjacent positions, i.e. 2,3− or 3,4− in the phenyl ring; and physiologically acceptable salts and optical isomers thereof.

4,372,895
DISC FOR AERATION OF SEWAGE

Edward P. Saffran, Waukesha, Wis., assignor to Envirex Inc., Waukesha, Wis.

Filed Apr. 28, 1980, Ser. No. 144,480
Int. Cl.[3] B01F *9/08;* C02F *3/18*
U.S. Cl. 261—92 6 Claims

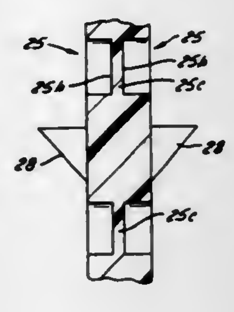

1. A rotatable disc for aerating and moving liquid such as sewage in a circular channel and having a hub for mounting on a drive shaft and flat parallel faces normal to the hub axis, said disc being of a diameter and constructed for rotation at speeds such that the air is carried as a gas to below the surface of the liquid, each face having a multiplicity of substantially round recesses of generally equal size, the depth of each recess being greater than one-half of and not greater than the diameter of the recess.

4,372,896
DEVICE ADAPTED TO CORRECT THE AIR-FUEL RATIO OF THE MIXTURE DELIVERED BY A CARBURETOR DURING THE PERIODS OF OPERATION AT LOW LOADS OF A MOTOR VEHICLE ENGINE

Francesco Bellicardi, and Renato Vitto, both of Bologna, Italy, assignors to Weber S.p.A., Bologna, Italy

Continuation of Ser. No. 156,803, Jun. 5, 1980, abandoned. This application Nov. 16, 1981, Ser. No. 321,407
Claims priority, application Italy, Jun. 8, 1979, 3432 A/79
Int. Cl.[3] F02M *7/24*
U.S. Cl. 261—121 B 8 Claims

1. A correction device for correcting the air-fuel ratio of the mixture delivered by a carburetor in particular in the periods of operation at low loads of the motor vehicle engine, comprising

a first channel formed in the body of the carburetor, which channel communicates, at one end, with a fuel delivering circuit and with the atmosphere, respectively, through two conduits having each a passage bore of pre-established cross-section, and at the other end, through a plurality of bores, with the intake conduit of the carburetor in a zone located near the rim of the throttle, characterized in that opening into the said first channel, in a position downstream of the outlet of said fuel delivering circuit, is a first end of a second channel formed in the body of the carburetor, the said second channel being provided with a bore of pre-established cross-section arranged to meter a flow of secondary air supplied to the said first

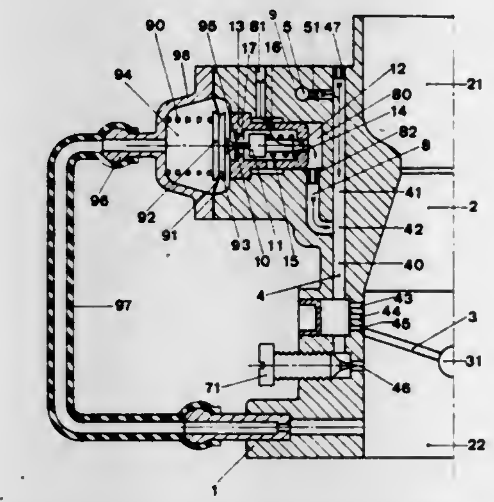

channel, at the other end of the said second channel, upstream of said bore therein of pre-established cross section, there being disposed a cavity formed in the body of the carburetor and closed by a cover fixed thereon, a device to close said second channel being disposed inside said cavity, said device comprising a bushing coaxial with said cavity and housed therein having a plurality of radial holes communicating with the atmosphere and an axial hole communicating with said second channel, a needle valve floating inside said bushing and adapted to close said axial hole against the action of a spring housed inside the bushing, and means to urge said needle valve in response to the variations of the vacuum in the said intake conduit downstream of the throttle valve of the carburetor.

4,372,897
DUAL SHEET CAPILLARY HEAT EXCHANGER

William G. Sanderson; Richard B. Sumner, and Loren G. Kragh, all of Tacoma, Wash., assignors to Tower Systems Inc., Tacoma, Wash.

Filed Apr. 16, 1981, Ser. No. 254,605
Int. Cl.[3] B01F *3/04*
U.S. Cl. 261—153 15 Claims

1. A heat exchanger comprising in combination:

at least one enclosure comprising two substantially parallel flexile and wettable sheet sidewalls sealed together along their vertical edges and open along their top and bottom edges and disposed sufficiently proximate to each other to create capillary attraction between the sheets when a liquid is introduced therebetween;

means suspending the enclosure;

a liquid carrying header disposed above the top edge opening in the enclosure and having means for dispensing liquid into the enclosure; and

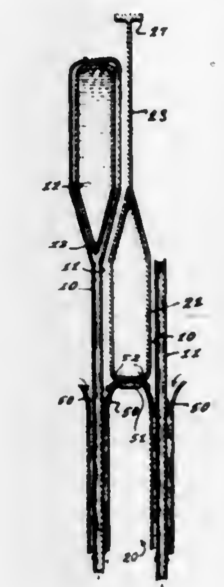

means passing a fluid across the outside surface of at least one of the sidewalls of the enclosure in heat exchange relation with the liquid within the enclosure.

4,372,898
PROCESS OF CROSSLINKING ELECTRICAL INSULATORS OF PLASTIC OR RUBBER

George Menges, Aachen-Laurensberg; Klaus Kircher, Aachen-Richterich, and Bernd Franzkoch, Aachen Stettiner, all of Fed. Rep. of Germany, assignors to Paul Troester Maschinenfabrik, Fed. Rep. of Germany

Continuation-in-part of Ser. No. 6,778, Jan. 26, 1979, abandoned. This application Jul. 25, 1980, Ser. No. 173,190
Claims priority, application Fed. Rep. of Germany, Jan. 26, 1978, 2803252
Int. Cl.[3] B29C *13/04*
U.S. Cl. 264—22 17 Claims

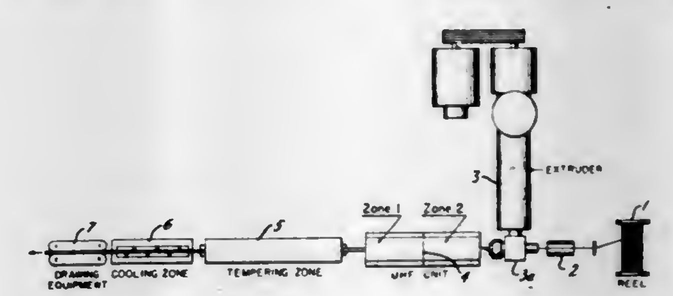

1. A process for making electrical insulators which comprises uniformly mixing an insulating and electrically inactive crosslinkable polymer material selected from the group consisting of plastic and synthetic rubber with a crosslinking agent which is excitable in an ultra-high frequency alternating current electromagnetic field to produce radicals for effecting crosslinking of said polymer material, and which by subjection to said field in the crosslinking process are decomposed or converted into a decomposition or reaction product which is not excitable by an alternating current electric field, forming said mixture into the form of the insulators to be produced, and thereafter subjecting said formed mixture to an ultra-high frequency alternating current electromagnetic field to activate said crosslinking agent to effect crosslinking of said polymer material and to decompose or convert said crosslinking agent to a decomposition or reaction product not excitable by an alternating current electric field, said crosslinking agent being selected from the group consisting of t-butylperbenzoate, t-butylperoxide-3,5,5 trimethylhexanoate, 2,5-di-benzoylperoxy-2,5 dimethylhexane, di-tributyl peroxyterephthalate, 1, 1-di-tributylperoxy-3,5,5-trimethyl cyclohexane, 2-methyl-2-cumylperoxy-5-ketotetrahydrofuran, 3-tributylperoxy-3-

phenylphthalide and 3-t-butylperoxy-3 (p-chlorphenyl) phthalide, said mixture being free of electrically active material which retains its electrical activity after subjection to said field.

4,372,899
METHOD OF MANUFACTURING PARTICLEBOARD AND THE LIKE
Dieter Wiemann, Barsinghausen; Günter Seeger, and Berndt Greten, both of Springe, all of Fed. Rep. of Germany, assignors to Bison-Werke Bahre & Greten GmbH & Co. KG, Fed. Rep. of Germany
Filed Mar. 25, 1981, Ser. No. 247,478
Claims priority, application Fed. Rep. of Germany, Apr. 1, 1980, 3012676; Apr. 1, 1980, 3012677; Apr. 1, 1980, 3012678; Apr. 1, 1980, 3012679
Int. Cl.³ B29J *5/00*
U.S. Cl. 264—25 **31 Claims**

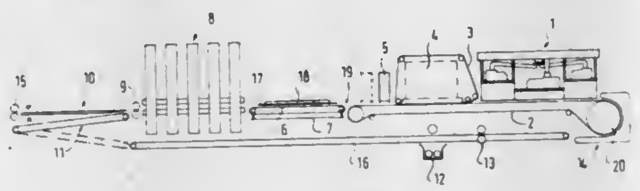

4. Apparatus for manufacturing sections of particleboard comprising a forming conveyor, which extends between a mat carrier feeding station having a direction changing drum for turning over the mat carriers and a mat carrier transfer station and is guided beneath a stationary scattering station for scattering a mat of particulate material onto mat carriers forwarded on said forming conveyor; means for continuously driving said forming conveyor; a cut-off saw associated with said forming conveyor for separating said mat into mat sections; a transport and storage unit for supplying the mat carriers, which are each laden with a respective mat section, to a manufacturing press; and also mat carrier return means for returning the mat carriers to the mat carrier feeding station; wherein the transport and storage unit for the laden mat carriers comprises an accelerating conveyor extending between said mat carrier transfer station and said manufacturing press, said manufacturing press consisting of a discontinuously working single storey press having its own transport device which clamps onto side edges of each mat carrier after an initial infeed movement of the mat carriers; a device for separating pressed boards and mat carriers; and a reversible guide conveyor provided at the outlet of the press for returning the mat carriers without turning them over; and wherein means for steplessly adjusting the overlap of sequentially following mat carriers is arranged between said mat carrier return means and said mat carrier feeding station.

4,372,900
METHOD OF FORMING REINFORCED FOAM STRUCTURE
Ralph G. Doerfling, Northville, Mich., assignor to Detroit Gasket & Mfg. Co., Detroit, Mich.
Filed Nov. 13, 1980, Ser. No. 206,496
Int. Cl.³ B29D *27/04*
U.S. Cl. 264—45.3 **1 Claim**

1. A method of forming a contoured fiberglass reinforced thermosetting foam laminate, comprising the steps of:
(a) laying a coherent mat of loosely woven glass fibers on a finish sheet wherein said finish sheet is a flexible woven sheet of absorbent fibers;
(b) spraying a liquid low density foamable thermosetting resin reaction mixture into said fiberglass mat, from opposite said mat, under sufficient pressure to fully penetrate said mat of glass fibers and wet said finish sheet, said finish sheet sufficiently pervious to adsorb said liquid resin;
(c) allowing said liquid thermosetting resin reaction mixture to foam and freely expand within said fiberglass mat for filling said mat and for temporarily bonding said finish sheet to said mat, and said thermosetting resin foam is an open cell relatively rigid polyurethane foam having a free blown density of less than about one pound per cubic foot; and
(d) immediately placing said thermosetting foam-fiberglass mat and finish sheet laminate in a contoured die, prior to the curing of said foam, and forming said laminate under

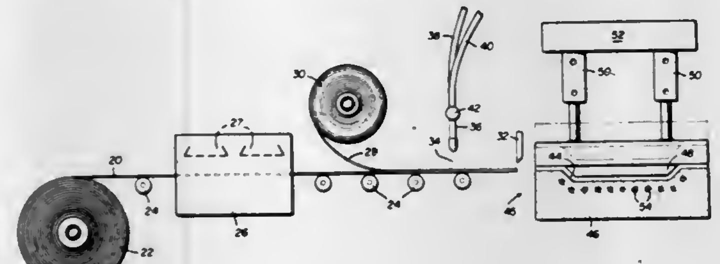

heat and pressure in said die into a permanently contoured shape and simultaneously permanently bonding said finish sheet to said contoured foam-fiberglass mat; and
(e) including heating said finish sheet prior to overlying said fiberglass mat on said finish sheet to prevent soaking of said finish sheet with said liquid thermosetting resin, thereby limiting blowing of said thermosetting resin foam through said finish sheet during foaming of said thermosetting resin reaction mixture.

4,372,901
PREFABRICATED PANEL CONSTRUCTION SYSTEM
Kwon S. Kim, Oklahoma City, Okla., assignor to Star Manufacturing Co., Oklahoma City, Okla.
Continuation of Ser. No. 40,971, May 21, 1979, abandoned, which is a division of Ser. No. 893,435, Apr. 4, 1978, Pat. No. 4,295,304. This application Feb. 3, 1981, Ser. No. 231,087
Int. Cl.³ B29D *27/04*
U.S. Cl. 264—46.5 **3 Claims**

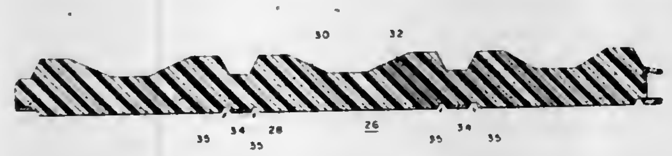

1. A method of making a prefabricated construction panel comprising the steps of:
(a) providing first and second sheets, at least one of said sheets having a plurality of elongated cavities formed by and between adjacent elongated corrugations formed in said one sheet, said cavities extending at least to one edge of said one sheet;
(b) arranging said first and second sheets in parallel spaced relation to each other;
(c) providing a plurality of elongated fastener receiving members, said fastener receiving members each comprising a continuous flat strip of metal having a length corresponding substantially to the length of said cavities and a width limited to that which will permit positioning said fastener receiving members in said cavities and against an inside surface of said one sheet;
(d) locating said fastener receiving members with respect to said one sheet by positioning one of fastener receiving members in selected ones of said cavities, respectively, against said inside surface for receiving, in use, screw threaded fastener members threaded into said panel in a selected position from the outside surface of said one sheet for securing said panel to a structural support; and
(e) securing said fastener receiving members within said cavities by filling the space between said sheets with an insulating material, said insulating material, upon filling said space, serving to hold said fastener receiving members in said cavities and against said inside surface.

4,372,902
PREPARATION OF DENSE CERAMICS
Ivor E. Denton, Wantage, and John W. Henney, Abingdon, both of England, assignors to United Kingdom Atomic Energy Authority, London, England
Continuation of Ser. No. 159,626, Jun. 16, 1980, abandoned. This application Jan. 4, 1982, Ser. No. 337,025
Claims priority, application Japan, Jun. 25, 1979, 54-22096
Int. Cl.³ C04B *35/56*
U.S. Cl. 264—65 **5 Claims**

1. In a method of preparing a dense silicon carbide body by forming into a green body a mixture comprising silicon carbide powder having a surface area in the range from 3 m^2/g to 14 m^2/g and additionally a boron containing material and a carbonaceous material, and sintering the green body to produce the dense silicon carbide body, the improvement wherein the sintering is carried out in a methane-containing atmosphere, methane constituting less than 30% by volume of said atmosphere.

4,372,903
PROCESS FOR CONTROLLING THE MOVEMENT OF PRESS COMPONENTS
Steven L. Affolder, Berne, Ind., assignor to CTS Corporation, Elkhart, Ind.
Division of Ser. No. 183,256, Sep. 2, 1980, Pat. No. 4,327,996. This application Sep. 21, 1981, Ser. No. 303,970
Int. Cl.³ B22F *3/02*
U.S. Cl. 264—109 **4 Claims**

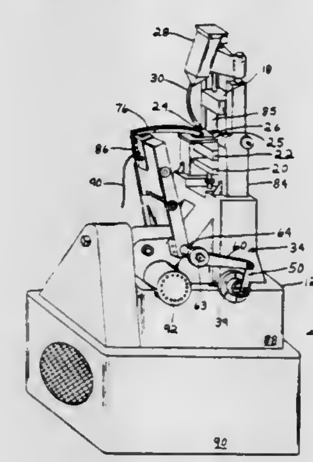

1. A method for producing briquettes comprising the steps of loading a die cavity with loose powders through a reciprocable shoe, compressing the loose powders within the die cavity, ejecting a formed briquette from the die cavity, and coordinating the movements of said die cavity with the reciprocable shoe movement by coupling said shoe through a bell crank, crank arm member and rocker arms to a power shaft for adjusting the phase of shoe movement, range of shoe movement, and speed of movement with the opening and closing movements of the die by controlling the center of rotation of the crank arm member relative to the axis of rotation of the power shaft and further controlling the angular position of the bell crank operatively disposed between said power shaft and said crank arm member.

4,372,904
METHOD FOR MAKING AN EAR PLUG
Dennis L. Gunn, P.O. Box 738, Atlanta, Tex. 75551
Continuation of Ser. No. 813,009, Jul. 7, 1977, abandoned. This application Mar. 27, 1981, Ser. No. 248,562
Int. Cl.³ B29C *5/00, 17/10;* **B29D** *3/00*
U.S. Cl. 264—134 **1 Claim**

1. A method for forming an earplug for reduction of noise when worn by a user which method comprises the steps of:
(a) first placing a fibrous pellet in the ear canal of a user past the second bend and thereafter forming a plastic impression of the ear adjacent to the pellet, and wherein some excess plastic impression is formed which excess is partly shaped by the external ear and which reaches the outer end of the ear canal;
(b) trimming the plastic impression to form a generally flat face thereon which trimming removes the external ear portion of the impression;
(c) coating the trimmed impression with an external wax coating by dipping, and dipping the impression in a soapy liquid parting agent and thereafter permitting the impression to dry at room temperature and thereby harden on the outer surface;
(d) glueing the trimmed impression along with a plurality of similarly obtained impressions to a flask plate at the flat face thereon;
(e) placing a dam means around the flask plate and pouring a liquid which cures into a stonelike material over the flask plate to a depth sufficient to submerge and fully surround the plastic impression;
(f) agitating the flask plate and liquid to cause air bubbles to rise to the top of the liquid;
(g) curing the liquid to form a stonelike solid member;
(h) removing the flask plate from the solid member and thereafter removing the plastic impressions to leave investment cavities therein and trimming said investment to remove any sharp corners formed therein;
(i) coating the solid member and walls defining said investment cavities formed therein with a liquid mold release material to enhance subsequent mold release and permitting the liquid to dry;
(j) placing a liquid material which is capable of curing into a solid resilient material in the cavities including the steps of:
(1) making a first pour of liquid material;
(2) pressure packing the first pour of liquid material;
(3) making a second pour of liquid material after the first while the first pour is still liquid;
(4) pressure packing the second pour of liquid material;
(5) repeating steps (1) to (4) until the investment cavities are filled with uncured liquid material free of voids and bubbles;
(k) pressure curing the uncured liquid material at a temperature elevated sufficiently to obtain curing thereof into a resilient material;
(l) reducing the temperature to a level permitting access to the cured resilient earplug material;
(m) breaking the solid member across the cavity to remove the cured earplug; and
(n) coding the cured earplug to facilitate the identification of

a left earplug from a right earplug using number or color coding.

4,372,905
METHOD OF FORMING A PIPE SOCKET
Nils-Erik Bohman, Forsheda, Sweden, assignor to Forsheda Gummifabrik AB, Forsheda, Sweden
Filed Dec. 30, 1980, Ser. No. 221,386
Claims priority, application Sweden, Jan. 14, 1980, 8000270
Int. Cl.^{3} B22D *11/126;* **B29C** *19/00*
U.S. Cl. 264—249 **4 Claims**

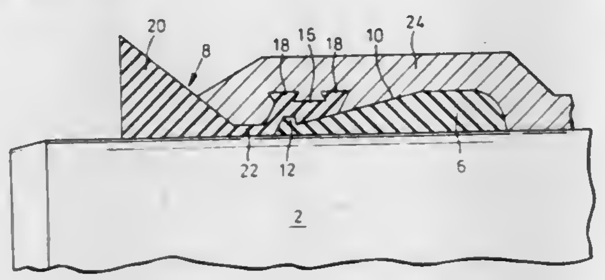

1. A method of forming a pipe socket having a sealing ring positioned at the inner surface of the wall of the pipe socket, said sealing ring having a fastening portion and a sealing portion connected therewith, the pipe wall being formed around a substantially cylindrical formed surface, characterized in that the sealing ring (**8**) is positioned around the form surface with the fastening portion (**16**) and the sealing portion (**20**) positioned axially adjacent each other, that the pipe wall (**24**) is formed around the form surface and the fastening portion of the sealing ring while leaving at least the main portion of the sealing portion outside the end of the pipe wall and that the sealing portion is folded against the inner side of the pipe wall after the pipe wall has been removed from the form surface with the fastening portion retained in the pipe wall.

4,372,906
METHOD AND APPARATUS FOR PRE-CASTING STEEL REINFORCED CONCRETE BOX-LIKE MODULES
Jaime L. del Valle, Rio Piedras, P.R., assignor to Master Modular Homes, Inc., Toa Baja, P.R.
Division of Ser. No. 942,377, Sep. 14, 1978, Pat. No. 4,272,050. This application Jan. 8, 1981, Ser. No. 223,434
Int. Cl.^{3} B28B *21/60;* **B29C** *7/00*
U.S. Cl. 264—256 **10 Claims**

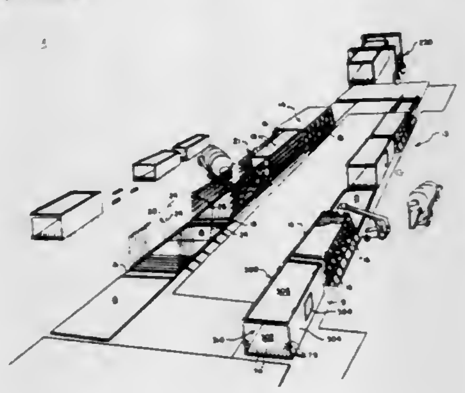

1. A method for forming, on a casting bed, a precast concrete box like building module of the type having a floor, a pair of spaced apart side walls extending up from said floor, and a roof extending between the upper ends of said side walls; said method comprising the steps of: (a) integrally casting simultaneously a concrete floor slab and the lower portions of the concrete side walls; (b) moving onto the floor slab after the concrete has at least partially cured a pair of interior forms each of which includes a vertical plate for defining the interior surface of one of said side walls and a horizontal plate at the upper end of the vertical plate for defining a portion only of the interior surface of said roof, each of said interior forms having been moved to bring its vertical plate into alignment with the interior surface of one of said lower portions of said side walls; (c) pouring the remainder of said concrete side walls and roof; (d) permitting the wall and roof concrete to cure sufficiently to render self-supporting a portion only of the roof concrete; (e) removing one of said interior forms to leave said portion only of the roof concrete unsupported; (f) shoring said unsupported portion of said roof concrete; and (g) then removing the other of said pair of interior forms from within said module, whereby said pair of interior forms has been removed from said module after a curing time less than the curing time required to render the entire roof self-supporting.

4,372,907
METHOD FOR MANUFACTURING PLASTIC ELECTRICAL INSULATORS
Georg Herold, Lichtenfels, and Hermann Kabs, Nuremberg, both of Fed. Rep. of Germany, assignors to Siemens Aktiengesellschaft, Munich, Fed. Rep. of Germany
Filed Jan. 19, 1981, Ser. No. 226,351
Claims priority, application Fed. Rep. of Germany, Jan. 29, 1980, 3003095
Int. Cl.^{3} B29D *31/00*
U.S. Cl. 264—265 **4 Claims**

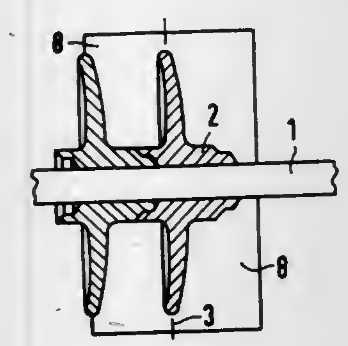

1. A method for manufacturing a plastic electrical insulator for use outdoors, the electrical insulator having a fiberglass-reinforced plastic core rod, and an insulator disc surrounding the plastic core rod, the insulator disc being formed of an electrically insulating plastic molding compound, the method comprising the step of:

molding the insulator disc in a mold having a mold separation plane, an outer edge of the disc being situated near the mold separation plane; and

surrounding the insulation core rod with A multiply divided tool and a glider tool to form at least one further insulator disc, said further insulator disc being molded so as to partially overlap the previously molded insulator disc.

4,372,908
MANUFACTURE OF ARTICLES BY DRAWING
Kjell M. Jakobsen, Skanör, and Claes T. Nilsson, Löddeköpinge, both of Sweden, assignors to PLM Aktiebolag, Malmo, Sweden
Filed May 30, 1980, Ser. No. 155,126
Claims priority, application Sweden, Jun. 11, 1979, 7905046
Int. Cl.^{3} B29C *17/03*
U.S. Cl. 264—292 **9 Claims**

1. A process for the manufacture of an article from polyethylene terepthalate or similar materials comprising providing a substantially flat blank of amorphous, polyethylene terephthalate having a crystallinity of less than 10%, clamping said blank between clamping devices to form at least one inner zone completely surrounded by a closed, band-like, clamped section of material, applying a press element against said inner zone over a region smaller than the total area of said inner zone, whereby a second closed, band-like zone is formed between said clamped band-like section and said inner zone to which the press element is applied, relatively displacing said press

element and said clamping devices with the thermoplastic material at a temperature below the glass transition temperature (Tg) while maintaining said press element in contact with said inner zone, the second band-like zone being substantially greater than the thickness of the blank whereby the material in said second band-like zone is freely stretched by drawing in a drawing region between the outer surface of the press element and the inner surface of the clamping devices without contact of the drawn material with the surfaces of the clamping devices, the material in said drawing region forming a transition zone at which flow takes place in the material reducing the original thickness of the blank by a factor of about 3 to effect crystallization thereof and monoaxial orientation whereby a drawn element comprising a body with a wall of monoaxially oriented crystallized material is formed which element further comprises an edge part, and elongating said body in the axial direction by a number of repeated drawing steps to impart reduced dimensions at right angles thereto, the thickness of the drawn material being substantially unchanged.

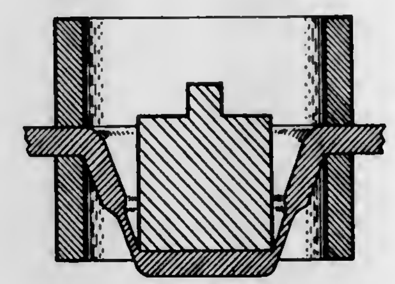

4,372,909
METHOD OF PRODUCING A BOTTLE OF SATURATED POLYESTER RESIN
Yataro Yoshino; Akiho Ota, and Hiroaki Sugiura, all of Tokyo, Japan, assignors to Yoshino Kogyosho Co., Ltd., Tokyo, Japan
Division of Ser. No. 82,698, Oct. 9, 1979. This application Mar. 19, 1981, Ser. No. 245,430
Int. Cl.^{3} B29C *17/07*
U.S. Cl. 264—521 **2 Claims**

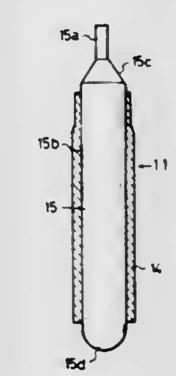

1. A method of producing a bottle of a saturated polyester resin by preparing a parison of a saturated polyester resin by an injection-molding process and by biaxially orienting said parison, comprising the steps of: molding said parison with both its ends open and having a mouth of relatively small diameter, a barrel of larger diameter and a tapered shoulder extending therebetween; heating only the mouth of said parison to an orientable temperature; orienting said mouth with a rod-shaped orienting jig which is extracted upward from the barrel to the mouth of said parison so that said mouth is oriented in the perpendicular direction to the axis of the parison, said rod-shaped orienting jig having a body, a shoulder formed on the upper end of the body and a head formed on the shoulder with a smaller diameter than that of the body; heating the barrel of said parison to a biaxially orientable temperature and blow-molding said parison in a mold.

4,372,910
METHOD FOR MOLDING HOLLOW PLASTIC ARTICLES
John F. Stroup, Cuyahoga Falls; Harold J. Robins, Cleveland, and Michael Teeple, Brunswick, all of Ohio, assignors to Van Dorn Company, Cleveland, Ohio
Filed Jun. 23, 1980, Ser. No. 162,179
Int. Cl.^{3} B29C *17/07*
U.S. Cl. 264—532 **23 Claims**

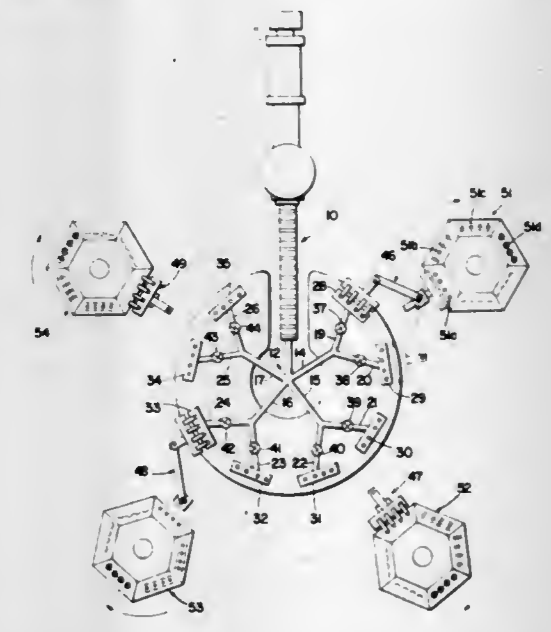

1. A method of making hollow plastic articles from a thermoplastic resin material which comprises the steps of:

extruding plasticized resin in a hot stream;

directing the stream of resin sequentially into a plurality of preform molds disposed in at least two sets of molds having two or more molds in each set;

forming a preform in each mold;

transferring the preforms sequentially from each mold of each set of two or more molds to a single blowing apparatus before the preforms cool substantially, there being a separate blowing apparatus for each set of molds; and

blowing the preforms into plastic articles, the time interval between the forming of the preform and the blowing of the preform being substantially the same for all preforms.

4,372,911
METHOD FOR FLATTENING THE CURVE OF EVOLUTION OF HEAT IN A FAST REACTOR CORE
Pierre C. Cachera, Saint-Germain en Laye, France, assignor to Electricite de France (Service National), Paris, France
Continuation-in-part of Ser. No. 843,652, Oct. 19, 1977, abandoned, which is a continuation-in-part of Ser. No. 656,603, Feb. 9, 1976, abandoned. This application May 21, 1980, Ser. No. 151,977
Claims priority, application France, Feb. 10, 1975, 75 04112
Int. Cl.^{3} G21C *3/16*
U.S. Cl. 376—349 **4 Claims**

1. A method for flattening the curve of evolution of heat of vertical fuel elements within the core of a liquid metal cooled fast neutron reactor having at least three core regions in which the density of neutron flux in the reactor conventionally decreases when going from the center of the core of the reactor toward its periphery in an axial direction and in a radial direction comprising the steps of forming said at least three core regions of hollow vertical fuel elements of constant enrichment and of the same outer diameter, of a material which is entirely in a solid state at the normal temperature of functioning of said reactor, forming each fuel element with an axial vertical canal

in the fissile part of the fuel element having a diameter in right section, disposing said elements in the core in such a way that the elements at the center of the core have a greater canal diameter than the elements disposed closer the radial periphery of the core, the diameter in right section of the axial canal of the fuel elements in each core region being different from the

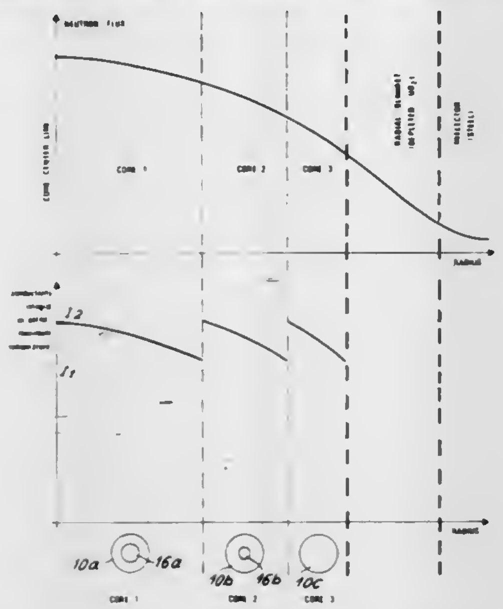

diameters at the same height in all other core regions with this reduction in diameter being proportional to the reduction in neutron flux density so as to maintain the integral of conductivity at a substantially constant value, and providing for the fuel elements disposed at the same radial distance from the center of the core the same diameter of axial canal.

4,372,912
METHOD OF CONTROLLING THE REACTIVITY OF A GAS-COOLED CORE REACTOR

Claus-Benedict von der Decken, Kohnscheid; Hans-Jürgen Hantke, Ketsch, and Walter Stürmer, Mannheim, all of Fed. Rep. of Germany, assignors to Kernforschungsanlage Jülich Gesellschaft mit beschränkter Haftung, Jülich, Fed. Rep. of Germany
Continuation of Ser. No. 934,373, Aug. 16, 1978, abandoned, which is a continuation-in-part of Ser. No. 732,455, Oct. 14, 1976, abandoned, which is a continuation of Ser. No. 471,967, May 21, 1974, abandoned. This application Jul. 8, 1980, Ser. No. 167,432
Int. Cl.³ G21C *1/22*
U.S. Cl. 376—381 1 Claim

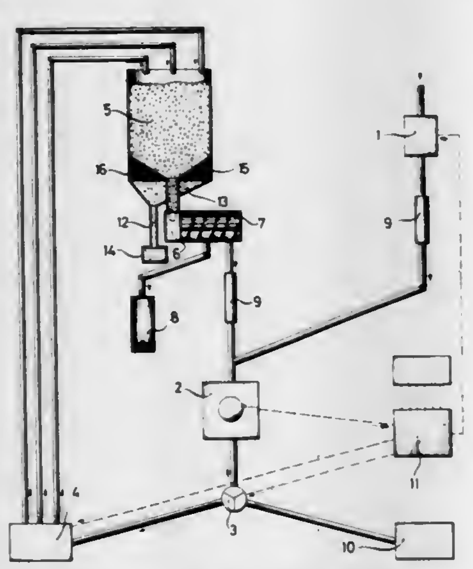

1. In a gas-cooled reactor of the pebble bed type:
pebble bed nuclear fuel comprised of numerous uniform spherical fuel units, each having a diameter of approximately six centimeters;
a container for containing the spherical fuel units in a three-dimensional pile, wherein the spherical fuel units define uniform spaces therebetween through which cooling gas circulates, the container having a ceiling reflector with opening means therethrough and a bottom having an opening means therethrough; and
a plurality of neutron-absorbing spheres of absorbing material for arresting nuclear reactions in the pile when the absorbing spheres are poured through the opening means in the top of the container and accumulate in the spaces between the fuel units; the absorbing spheres having a diameter no less than 0.93 centimeters and no greater than 2.50 centimeters.

4,372,913
POLYMERIZATION, AND CORROSION RESISTANCE, ENHANCEMENT BY ACID ADDITION SALTS OF METHACRYLIC ACID AND A 2-MONO (LOWER) ALKYLAMINOETHYL METHACRYLATE OR POLYMERS OF THESE SALTS

Max Klein, 257 Riveredge Rd., Tinton Falls, N.J. 07724
Continuation-in-part of Ser. No. 903,566, May 8, 1978, Pat. No. 4,212,782, which is a continuation of Ser. No. 674,990, Apr. 8, 1976, abandoned, which is a continuation-in-part of Ser. No. 413,043, Nov. 5, 1975, Pat. No. 3,950,398, which is a continuation-in-part of Ser. No. 15,935, Mar. 2, 1970, abandoned, which is a continuation-in-part of Ser. No. 488,756, Sep. 20, 1965, abandoned. This application Jul. 14, 1980, Ser. No. 168,015
Int. Cl.³ C23F *11/12, 11/14*
U.S. Cl. 422—16 6 Claims

1. A method for enhancing the corrosion resistance of iron or steel when contacted with water having a pH of about 2 to about 11, which method comprises dissolving in said water, in an amount effective for enhancing corrosion resistance, an agent selected from the group consisting of (a) an acid addition salt of methacrylic acid and a 2-mono(lower)alkylaminoethyl methacrylate said lower alkyl group being straight or branched chain, or cyclic, and having up to 6 carbons, the methacrylic acid and the 2-mono(lower)alkylaminoethyl methacrylate components being present in said salt in the ratio of from about 1 to about 1.5 moles of one per mole of the other and (b) a solid, free radical addition polymer of an acid addition salt of methacrylic acid and a 2-mono(lower)alkylaminoethyl methacrylate, said lower alkyl group being defined as above, wherein the methacrylic acid and the monoalkylaminoethyl methacrylate moieties are linked to one another by addition at the respectively original vinyl group of each of them and present in the ratio of about 1 mole to about 1.5 moles of one of them per mole of the other, and which polymer is insoluble in pentane at below its boiling point and in aqueous media manifests amphoteric activity.

4,372,914
BLOOD OXYGENATOR

Donald A. Raible, Santa Ana, Calif., assignor to Bentley Laboratories, Inc., Irvine, Calif.
Continuation of Ser. No. 689,971, May 26, 1976, Pat. No. 4,268,476, which is a continuation-in-part of Ser. No. 584,464, Jun. 6, 1975, abandoned. This application Apr. 27, 1981, Ser. No. 257,885
The portion of the term of this patent subsequent to May 19, 1998, has been disclaimed.
Int. Cl.³ A61M *1/03*
U.S. Cl. 422—46 3 Claims

1. A bubble-type blood oxygenator having therein a bubble column having a first end and a second end, said bubble column being provided with a plurality of segments in end-to-end relationship, at least one of said segments having a serpentine passageway formed therein to promote secondary flow of blood bubbles passing therethrough, said passageway being provided with a plurality of turns so that said blood bubbles are continuously rotated throughout their passage through said

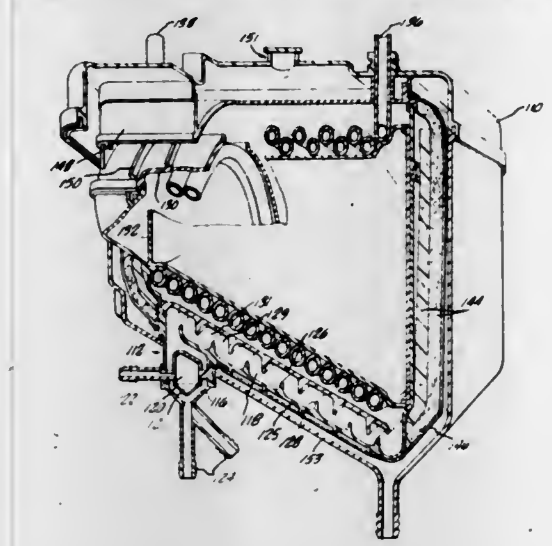

passageway, and a heat exchange conduit helically disposed in the bubble column of said oxygenator.

4,372,915
FLUORESCENT SULFUR DIOXIDE ANALYZER HAVING AN IMPROVED SULFUR DIOXIDE GENERATOR

Radhakrishna M. Neti, Brea, and Raymond E. Rocks, Anaheim, both of Calif., assignors to Beckman Instruments, Inc., Fullerton, Calif.
Filed Jun. 26, 1981, Ser. No. 277,458
Int. Cl.³ G01N *21/64;* B01J *7/00*
U.S. Cl. 422—91 9 Claims

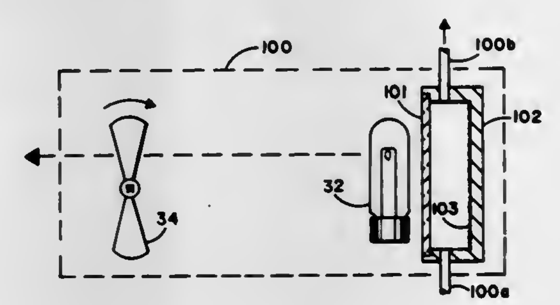

1. In a fluorescent sulfur dioxide analyzer of the type having a fluorescence chamber and a detector for measuring fluorescent emissions from sulfur dioxide molecules in the fluorescence chamber, the improvement comprising:
(a) a sulfur dioxide generator including:
(i) means defining an enclosure having an inlet for connection to a source of an oxygen containing gas and an outlet;
(ii) means defining a sulfur deposit within the enclosure;
(iii) source means for producing ultraviolet radiation, said source means being arranged to illuminate the sulfur deposit while the oxygen containing gas flows thereover at a selected range of wavelengths to generate sulfur dioxide without also generating substantial amounts of ozone; and
(b) means for connecting the sulfur dioxide generator in gas-supplying relationship to the fluorescence chamber.

4,372,916
ESTABLISHING AND ASCERTAINING DESIRED AIR REMOVAL IN STEAM STERILIZATION

Robert E. Chamberlain, Erie, and Thomas G. Cook, Fairview, both of Pa., assignors to American Sterilizer Company, Erie, Pa.
Division of Ser. No. 91,170, Nov. 6, 1979, Pat. No. 4,309,381. This application Jun. 30, 1981, Ser. No. 279,209
Int. Cl.³ A61L *2/06;* G05B *1/00*
U.S. Cl. 422—111 5 Claims

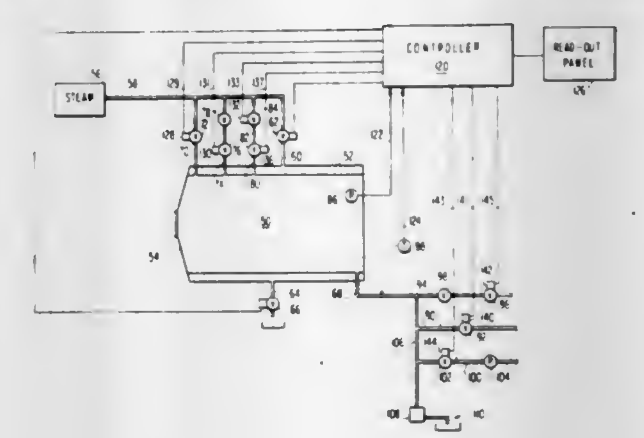

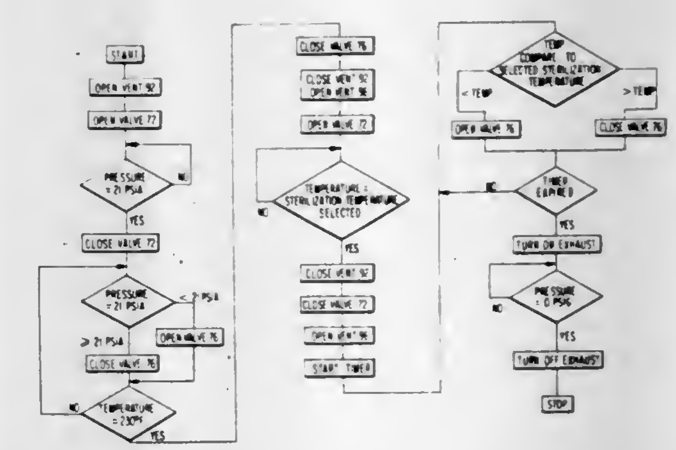

1. Apparatus for steam sterilization of goods utilizing steam flow through a chamber to facilitate removal of air during a load conditioning phase and providing for determination of effective air removal by correlating measured chamber conditions with steam-table established data for the dependent variables of pressure and temperature for saturated steam, comprising
a sterilizing chamber capable of operating at pressures above atmospheric,
steam inlet conduit means including automatically controllable valve means,
chamber atmosphere vent conduit means including automatically controllable vent valve means having a substantially wide open configuration and a substantially closed configuration,
chamber pressure sensing means,
chamber temperature sensing means,
means providing for use of predetermined steam-table values for the dependent variables of pressure and temperature for saturated steam,
controller means for controlling injection of steam into the chamber and venting of chamber atmosphere from the chamber to hold one of such variables substantially level while measuring the remaining of such variables,
such controller means being responsive to such chamber pressure sensing means, such chamber temperature sensing means and such means providing for use of predetermined steam-table values to ensure that substantially all air has been removed during the load conditioning phase,
such chamber venting being carried out with such vent valve means in such substantially wide open configuration

during air removal from the chamber followed by rapidly pressurizing the chamber,

such chamber vent valve means being in its substantially closed configuration for carrying out a sterilization exposure phase, with such sterilization phase being followed by an exhaust phase which returns chamber pressure to substantially atmospheric pressure level.

4,372,917

CONTACT LENS STERILIZING APPARATUS

Harold M. Miller, Whitinsville, Mass., assignor to American Optical Corporation, Southbridge, Mass.

Filed Nov. 5, 1981, Ser. No. 318,299

Int. Cl.³ A61L *3/00, 13/00*

U.S. Cl. 422—116 **6 Claims**

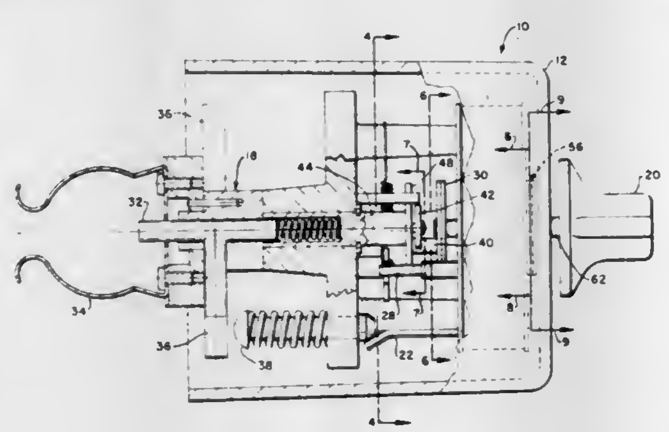

1. In container inverting apparatus having a timer operated trip lever associated with container supporting and inverting means and a timer escapement locking lever for controlling apparatus timing out, said container supporting and inverting means comprising:

an axially rotatable flipper mechanism;

spring means biasing said flipper mechanism in one axially rotatable direction to a stop position;

means for approximately 180° oppositely rotatably setting said flipper mechanism against the bias of said spring,

means for cocking said flipper mechanism at said approximately 180° setting, said timer trip lever being associated with said cocking means for releasing said flipper member at end of timing out of said timer and permitting spring initiated return rotation to said stop position;

a container receiving clip on said flipper mechanism including therewithin means for initiating timing out of said timer by reception of said container, said 180° return rotation of said flipper for container inversion being effected at end of said timing out.

4,372,918

FLOW THROUGH PRESSURE REACTION APPARATUS

Verle W. Woods; Jay A. Woods, and Dale G. Woods, all of P.O. Box 1016, Yakima, Wash. 98901

Continuation-in-part of Ser. No. 960,952, Nov. 15, 1978, abandoned. This application Oct. 6, 1980, Ser. No. 194,344

Int. Cl.³ B01J *19/00;* **E03B** *5/00;* **G05B** *9/05*

U.S. Cl. 422—129 **9 Claims**

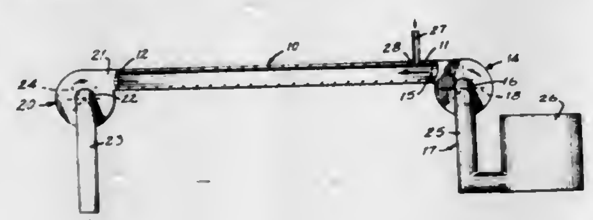

1. A flow-through pressure reaction apparatus, comprising:

an enclosed reaction chamber having first and second open ends;

a source of fluid;

first pump means having an inlet and a discharge;

fluid feed means operatively connected between the source of fluid and the inlet of said first pump means for directing a stream of fluid from said source to said first pump means in response to operation of said first pump means;

said first pump means having its discharge connected in closed fluid communication with said first open end of said reaction chamber for discharging the stream of fluid into said first open end at a first pressure head in response to operation of said first pump means;

second non-positive displacement pump means having an inlet and a discharge;

said second pump means having its discharge connected in closed fluid communication with said second open end of said reaction chamber for opposing movement of the stream of fluid within it by imparting to the fluid a second pressure head in response to operation of said second pump means, the value of said second pressure head being less than that of said first pressure head;

whereby simultaneous operation of said first and second pump means imparts flow to the stream of fluid from said first open end to said second open end of the reaction chamber due to the pressure head differential between said ends and such flow can be accommodated by passage of fluid through said second pump means.

4,372,919

VAPOR PHASE POLYMERIZATION APPARATUS FOR OLEFINS

Kunimichi Kubo, Tokyo; Mamoru Yoshikawa; Motokazu Watanabe, both of Kawasaki; Yasunosuke Miyazaki, Machida, and Mituji Miyoshi, Naka, all of Japan, assignors to Nippon Oil Company, Limited, Japan

Filed Mar. 10, 1981, Ser. No. 242,308

Claims priority, application Japan, Mar. 14, 1980, 55-31520; May 14, 1980, 55-62798

Int. Cl.³ B01J *12/02*

U.S. Cl. 422—137 **6 Claims**

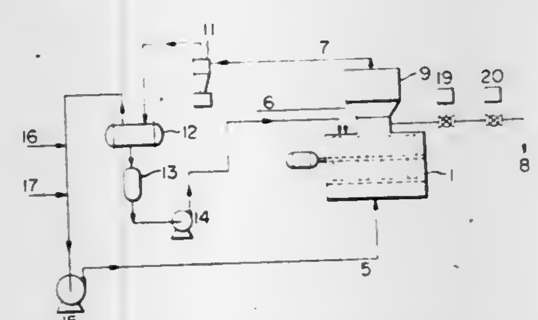

1. A vapor phase polymerization apparatus for olefins comprising a horizontal hollow cylindrical vessel having a lower curved surface formed by a perforated portion which is an arc of a circle defined by an angle of from 30 to 180 degrees from the center of said horizontal hollow cylindrical vessel, said perforated portion having a multiplicity of holes spaced at intervals in the range of from 0.5 to 50 mm; one or more agitator vanes mounted on a driving shaft, said driving shaft being centrally located in said vessel; an olefin feed chamber for feeding an olefin gas through said perforated portion, said olefin feed chamber being mounted so as to cover from below said perforated portion a gas flow velocity reducing chamber mounted at the top of said vessel; an unreacted olefin gas discharge port for discharging and recycling unreacted olefin gas through said olefin feed chamber; a polymerization catalyst inlet port; and a polymer outlet port, all said ports being provided in other portions than the curved perforated portion of said vessel.

4,372,920

AXIAL-RADIAL REACTOR FOR HETEROGENEOUS SYNTHESIS

Umberto Zardi, Lugano, Switzerland, assignor to Ammonia Casale S.A., Lugano, Switzerland, a part interest

Filed Jun. 24, 1980, Ser. No. 162,436

Claims priority, application Italy, Jul. 13, 1979, 24334 A/79; Jun. 11, 1980, 22701 A/80

Int. Cl.³ B01J *8/04;* **C01C** *1/04*

U.S. Cl. 422—148 **23 Claims**

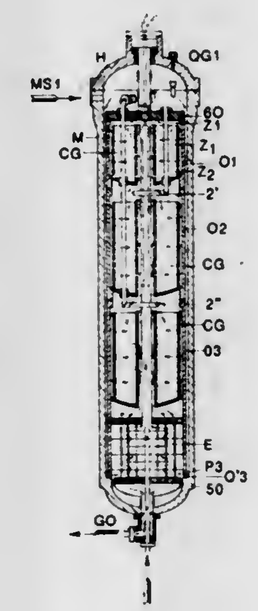

1. A reactor for heterogeneous catalytic reactions of gaseous reactants under pressure, comprising:

a container having an inlet for introduction of said gaseous reactants and an outlet for the efflux of products of said reactions;

a cartridge having a cylindrically shaped wall placed within said container and communicating with said inlet and said outlet;

at least two stationary-bed, catalyst-containing baskets supported within said cartridge, each of said baskets including an imperforate bottom section, a cylindrical outer perforated wall, a cylindrical inner concentric perforated wall and an annular opening defined by said inner and outer perforated walls in the upper end of each stationary-bed, catalyst-containing basket, said opening formed in a plane approximately perpendicular to the longitudinal axis of said inner and outer perforated walls, said bottom section and said inner and outer perforated walls cooperating with said cylindrically shaped cartridge wall to form a partially restrictive axial flow means, whereby a portion of said gaseous reactants enters or departs and passes through said annular opening in each of said stationary-bed, catalyst-containing baskets substantially in the axial direction and the remainder of said gaseous reactants enters and passes through the cylindrical outer perforated wall of each of said catalyst-containing baskets substantially in the radial direction.

4,372,921

STERILIZED STORAGE CONTAINER

Roger S. Sanderson, 24772 Santa Clara, Dana Point, Calif. 92629, and Robert C. Whelchel, 546 Tustin Ave., Newport Beach, Calif. 92660

Continuation of Ser. No. 115,678, Jan. 28, 1980, abandoned, and a continuation-in-part of Ser. No. 895,239, Apr. 10, 1978, Pat. No. 4,247,517, which is a continuation-in-part of Ser. No. 821,042, Aug. 1, 1977, Pat. No. 4,251,842, which is a continuation-in-part of Ser. No. 734,228, Oct. 20, 1976, abandoned, which is a continuation-in-part of Ser. No. 703,044, Jul. 6, 1976, Pat. No. 4,196,160, which is a continuation-in-part of Ser. No. 640,824, Dec. 15, 1975, abandoned. This application Dec. 8, 1981, Ser. No. 328,701

Int. Cl.³ A61L *2/06, 2/26;* **B65D** *51/16, 53/00*

U.S. Cl. 422—300 **9 Claims**

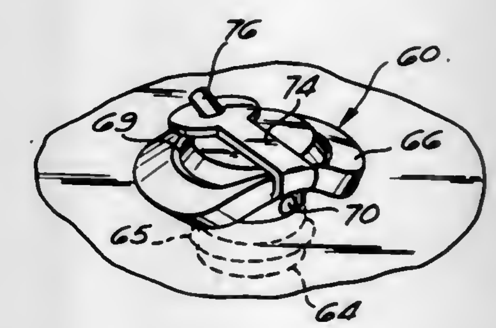

1. Apparatus for containing items while being sterilized and stored comprising:

means forming a container including means providing access to the container interior;

support means holding said access means open;

means attached to said support means forming an expandable chamber positioned so that expansion of said chamber will move said support means to release said access means and permit it to close; and

a relief valve in said container for relieving a vacuum within said container to permit the access means to be opened, said relief valve including a filter therein arranged so that any air entering the container through the relief valve must pass through said filter;

said relief valve comprises a resilient member having a tubular plug which is inserted into a hole in said container and includes an outer flange secured to said plug and sealed against the outer surface of said container, said tubular plug having a passage open at one end into the interior of said container and open at its other end through a port in the side wall of the said tubular plug adjacent said flange providing communication with the exterior of the chamber when the valve flange adjacent said port is partially pulled away from the container.

4,372,922

PROCESS FOR THE RECOVERY OF INDIUM

Paolo Fossi, 52, avenue de Cressac - La Commanderie des Templiers, 78310 Elancourt, France, and Emilio Sambarino, Viale Gramsci 194, 88074 Crotone (CZ), Italy

Continuation of Ser. No. 74,506, Sep. 11, 1979, abandoned. This application Aug. 10, 1981, Ser. No. 291,837

Claims priority, application France, Sep. 11, 1978, 78 26027

Int. Cl.³ C01G *15/00*

U.S. Cl. 423—112 **22 Claims**

1. Process for the selective recovery of indium from an aqueous sulfate solution of indium and other metals comprising at least zinc and iron, said indium being present in said aqueous sulfate solution as an impurity in a concentration of less than 1 gram per liter and in the III oxidation state, said aqueous sulfate solution having a hydrogen ion concentration between 0.01 and 5 N and a ferric iron concentration below 10 grams per liter, comprising the following successive stages:

(a) extracting said indium from said aqueous sulfate solution

by contacting said aqueous sulfate solution with a first stationary phase consisting of an inert substrate having a non-diluted diester of orthophosphoric acid as the active group bound thereto, whereby indium is extracted into said first stationary phase in proportionally greater quantities relative to the extraction of said other metals;

and

(b) eluting said indium from said first stationary phase by contacting said first phase with a second stripping phase comprising an acidic aqueous solution.

4,372,923

PURIFICATION OF SOLUTIONS OF GALLIUM VALUES BY LIQUID/LIQUID EXTRACTION

Jacques Helgorsky, Frepillon, and Alain Leveque, Paris, both of France, assignors to Rhone-Poulenc Industries, Paris, France

Filed Nov. 30, 1981, Ser. No. 326,178

Claims priority, application France, Dec. 5, 1980, 80 25831

Int. Cl.³ C01G *15/00*

U.S. Cl. 423—112 **13 Claims**

1. A process for the purification of an aqueous hydrochloric acid solution of gallium values by liquid/liquid extraction, comprising (i) liquid/liquid extracting an aqueous hydrochloric acid solution of gallium values with an organic phase which comprises a quaternary ammonium chloride extractant, (ii) separating the organic phase from the aqueous phase, (iii) selectively washing said organic phase by intimately contacting same with an aqueous solution of hydrochloric acid, whereby any remaining impurities are removed, (iv) next transferring the purified gallium values from said organic phase into an aqueous solution thereof, and (v) thence separating said organic phase from said resulting aqueous phase, whereby said aqueous phase comprises pure gallium chloride.

4,372,924

PURIFICATION OF ALKALI METAL HYDROXIDES

David L. Porter, Baton Rouge, La., assignor to The Dow Chemical Company, Midland, Mich.

Filed May 27, 1980, Ser. No. 153,351

Int. Cl.³ C01D *1/04*

U.S. Cl. 423—179 **17 Claims**

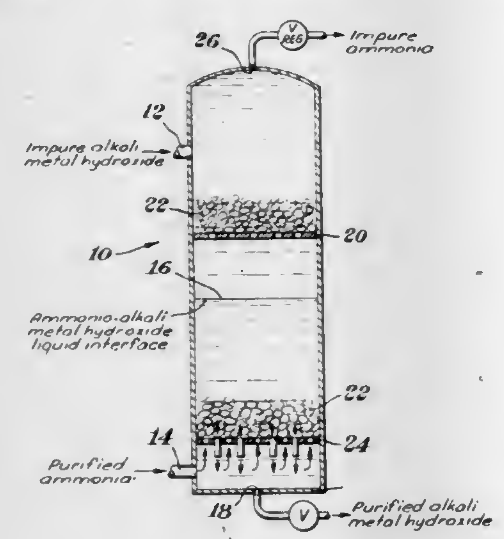

1. In a method to purify in liquid phases, an impure alkali metal hydroxide by countercurrently contacting an aqueous solution of the hydroxide with ammonia in a container having a first inlet for the impure hydroxide solution upwardly disposed from a second inlet for the ammonia, a first outlet for the purified hydroxide solution and a second outlet for the ammonia containing impurities extracted from the impure hydroxide solution, the improvement comprising

(a) feeding an aqueous solution containing from about 40 to about 60 weight percent alkali metal hydroxide and at least a sodium chloride impurity into the first inlet;

(b) feeding sufficient ammonia into the second inlet to provide an ammonia to alkali metal hydroxide volume ratio of about 0.6 to 1 to about 1 to 1;

(c) countercurrently flowing the hydroxide and ammonia through a bed of a substantially inert, insoluble particulate material in the container; and

(d) controlling the temperature of the purified hydroxide solution in the lower portion of the container within a range of about 155° to about 170° F.

4,372,925

PROCESS FOR THE REMOVAL OF ACID GASES FROM GAS MIXTURES CONTAINING METHANE

Roelof Cornelisse, Calgary, Canada, assignor to Shell Oil Company, Houston, Tex.

Filed Mar. 25, 1981, Ser. No. 247,496

Claims priority, application Netherlands, Mar. 31, 1980, 8001886

Int. Cl.³ B01D *53/34*

U.S. Cl. 423—226 **13 Claims**

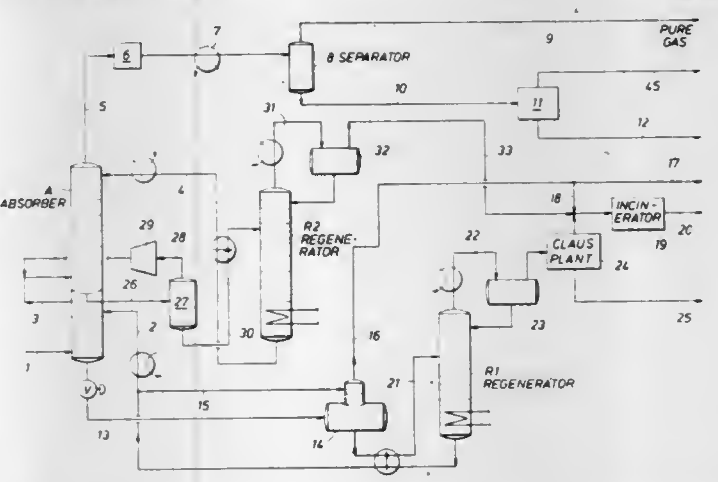

1. A process for the treatment of a gas stream containing methane, light hydrocarbons, H_2S, and CO_2 comprising

(a) contacting said gas stream at superatmospheric pressure in a first absorption zone with a first absorbent mixture which is selective for H_2S, said first absorbent mixture comprising from 5 percent to 35 percent by weight of water, from 15 to 50 percent by weight of physical absorbent, and from 10 to 60 percent by weight of chemical absorbent, said chemical absorbent comprising one or more tertiary amines, under conditions effective to absorb H_2S, and absorbing H_2S and producing a gaseous stream containing methane, light hydrocarbons and CO_2, and a loaded absorbent solution;

(b) passing the loaded absorbent solution to a first regeneration zone, regenerating the loaded absorbent solution and producing H_2S and first absorbent mixture, and returning regenerated first absorbent mixture to the first absorption zone;

(c) contacting the gaseous stream from the first absorption zone in a second absorption zone at superatmospheric pressure with a second absorbent mixture which is selective for CO_2 and H_2S, said second absorbent mixture comprising from 5 to 35 percent by weight of water, from 15 to 50 percent by weight of physical absorbent, and from 10 to 60 percent by weight of chemical absorbent, said chemical absorbent comprising one or more primary or secondary amines, under conditions effective to absorb CO_2 and any H_2S remaining in the gaseous stream, and absorbing CO_2 and H_2S remaining in the gaseous stream and obtaining a sweet gas stream containing methane and light hydrocarbons, and a loaded second absorbent solution;

(d) passing the loaded second absorbent solution to a second regeneration zone, regenerating the loaded second absorbent solution and producing a CO_2 stream and second absorbent mixture, and returning regenerated second absorbent mixture to the second absorption zone; and

(e) separating water and light hydrocarbons from the sweet gas stream.

4,372,926

PROCESS FOR DESULFURIZATION, DEDUSTING AND DISCHARGE OF HOT FLY ASH-CONTAINING FLUE GAS

Klaus E. Gude, Vedb k; Karsten S. Felsvang, Allerod, both of Denmark, and Everett L. Coe, Downey, Calif., assignors to A/S Niro Atomizer, Soborg, Denmark and Joy Manufacturing Company, Pittsburgh, Pa.

Filed Apr. 22, 1981, Ser. No. 256,533

Claims priority, application Denmark, Jun. 30, 1980, 2820/80

Int. Cl.³ B01J *8/00;* **C01B** *17/00*

U.S. Cl. 423—244 **8 Claims**

1. A process for desulfurization of hot, fly ash-containing flue gas produced in a boiler plant by means of a combined spray drying-absorption step and removal of the material produced by the spray drying-absorption and the fly ash in a baghouse filter plant, in which process a reheating of the gas treated by spray drying-absorption takes place by mixing the treated gas with a stream of hot flue gas diverted to by-pass the spray drying-absorption step, said process comprising the steps of

(i) providing a first and a second stream of hot flue gas;

(ii) using the first stream of flue gas for preheating a flow selected from the group consisting of combustion air and feed water for the boiler plant, thereby cooling said first stream;

(iii) spraying an aqueous suspension of basic material into said first stream, whereby the water of the suspension evaporates resulting in a further cooling of the first stream to a temperature lower than the temperature required, if the stream should without admixture or reheating be discharged into the atmosphere after subsequent purification, and whereby a substantial portion of sulfur dioxide of the first stream is absorbed from a powder which contains reaction products of the absorption and unreacted basic material;

(iv) separating a partial stream from said first stream and combining said partial stream with said second stream of hot flue gas;

(v) passing the combined partial stream and second stream through a part of a fabric filter of a baghouse plant;

(vi) passing the remainder of said first stream through the remainder of the fabric filter of the baghouse plant; and

(vii) downstream of the fabric filter mixing said combined stream and said remainder of the first stream to form a mixed stream, and discharging the mixed stream into the atmosphere.

4,372,927

SULFUR OXIDES REMOVAL

Glenn R. McCullough, Houston, Tex., assignor to Shell Oil Company, Houston, Tex.

Filed Aug. 17, 1981, Ser. No. 293,893

Int. Cl.³ B01J *8/00;* **C01B** *7/00;* **C01F** *1/00*

U.S. Cl. 423—244 **19 Claims**

1. A process for the removal of sulfur oxides from a gaseous stream containing oxygen and water vapor comprising contacting the gaseous stream in a contact zone with a particulate mixture of a reactive calcium-containing material and activated carbon, the ratio of reactive calcium-containing material to activated carbon, on a weight basis, being from 100:1 to 0.1:1.

4,372,928

METHOD OF SEPARATING ISOTOPES FROM A GAS MIXTURE

Jean Chatelet, Rambouillet; Michel Clerc, Limours; Andre Coste, Paris, and Paul Rigny, Sceaux, all of France, assignors to Commissariat a l'Energie Atomique, Paris, France

Continuation of Ser. No. 828,616, Aug. 23, 1977, abandoned. This application Dec. 20, 1979, Ser. No. 103,934

Claims priority, application France, Sep. 24, 1976, 76 28725

Int. Cl.³ B01D *59/00*

U.S. Cl. 423—249 **5 Claims**

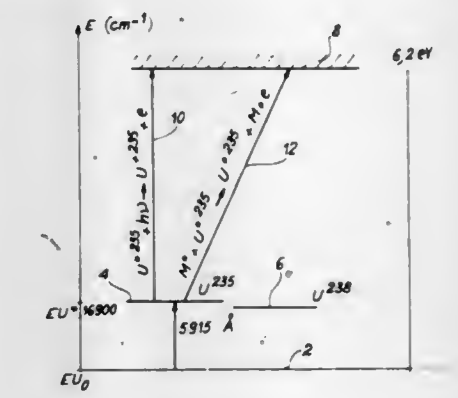

1. A method of separating isotopes from a gas mixture containing a number of isotopes of once ionized uranium, comprising the step of irradiating the mixture of once ionized uranium ions, with laser light made up of photons having an energy which resonates with an excitation level of a given isotope of the gas mixture, introducing simultaneously metastable atoms or molecules into the same mixture, the metastable atoms or molecules having an excitation energy which is less than the energy for a further ionization of the constituents of the mixture and greater than the energy gap between the energy for a further ionization of the given isotope excited by the laser light and the energy of the excitation level of the same isotope, the separation of the given isotope resulting from the further ionization of the excited isotope by metastable atoms or molecules, this further ionization being a Penning ionization.

4,372,929

ENERGY CONSERVATION AND POLLUTION ABATEMENT AT PHOSPHORUS FURNACES

James C. Barber, Florence, Ala., assignor to James C. Barber and Associates, Inc., Florence, Ala.

Filed Jan. 7, 1981, Ser. No. 223,122

Int. Cl.³ C01B *25/01*

U.S. Cl. 423—323 **13 Claims**

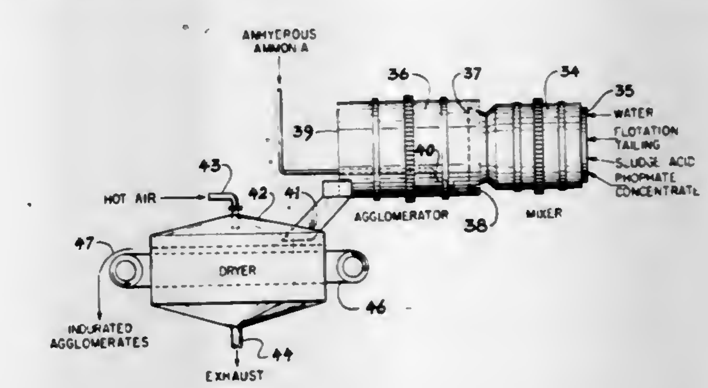

1. A process for smelting phosphate ore at phosphorus furnaces comprising the steps of:

(a) mixing minus ½-inch phosphate ore with a mineral acid, an alkaline fluid, and water;

(b) tumbling the mixture in a rotating cylinder to form agglomerates of the desired size;

(c) indurating the agglomerates in a hardening heat range;

(d) removing the minus 6-mesh fines from the agglomerates;

(e) recycling fines from step (d) to step (b);
(f) removing minus 6-mesh fines from reducing carbon;
(g) mixing the reducing carbon fines from step (f) with a mineral acid, an alkaline fluid, and water;
(h) tumbling mixture from step (g) in a horizontal rotating cylinder;
(i) indurating agglomerates from step (h) by heating in the temperature range of 200° to 280° F.;
(j) adjusting and maintaining the quantities of liquid phase in the steps of agglomerating reducing carbon fines and phosphate ore to prepare reducing carbon and phosphate ore agglomerates of the same average particle size and particle size distribution;
(k) preparing a proportioned charge mixture comprised of lump silica rock, onsize reducing carbon, agglomerated reducing carbon fines from step (i), and agglomerated phosphate ore from step (c);
(l) smelting the proportioned charge mixture from step (k) in a conventional electric phosphorus furnace to produce elemental phosphorus.

7. A process for smelting phosphate ore at phosphorus furnaces comprising the steps of:
(a) mixing minus $\frac{1}{4}$-inch phosphate ore with phosphoric acid in a rotating cylindrical mixer;
(b) discharging the mixture from step (a) into a rotating cylinder;
(c) adding ammonia to the rotating cylinder;
(d) tumbling said mixture to form agglomerates;
(e) indurating agglomerates from step (d) by heating
(f) preparing a proportioned furnace charge mixture comprised of agglomerated phosphate ore from step (e), reducing carbon, and flux;
(g) smelting the charge mixture from step (f) in a conventional phosphorus furnace;
(h) volatilizing ammonia from the phosphorus furnace;
(i) treating furnace gases in an electrostatic precipitator, adiabatic condenser, and gas exhauster as in a conventional condensing system;
(j) collecting water and condensed liquid phosphorus;
(k) neutralizing acidic particulates with volatilized ammonia;
(l) neutralizing acids in condenser water with volatilized ammonia.

4,372,930

ZEOLITE NU-3

Glyn D. Short, Yarm, and Thomas V. Whittam, Darlington, both of England, assignors to Imperial Chemical Industries Limited, London, England

Filed May 5, 1981, Ser. No. 260,839

Claims priority, application United Kingdom, May 13, 1980, 8015890

Int. Cl.³ C01B *33/20, 33/28*

U.S. Cl. 423—326 **17 Claims**

1. Zeolite Nu-3 having a molar composition expressed by the formula:

$$0.5 \text{ to } 1.5\ R_2O{:}Y_2O_3{:}\text{at least } 5\ XO_2{:}0 \text{ to } 400\ H_2O$$

wherein R is a monovalent cation or l/n of a cation of valency n where n is a whole number of 2 or more, X is silicon and/or germanium, Y is one or more of aluminium, iron or gallium and H_2O is water of hydration additional to water notionally present when R is H, and having an X-ray diffraction pattern substantially as shown in Table 1.

4,372,931

MICROCRYSTALLINE SYNTHETIC FAUJASITE

William J. Ambs, Swarthmore, Pa., assignor to Air Products and Chemicals, Inc., Allentown, Pa.

Continuation of Ser. No. 154,697, May 30, 1980, abandoned. This application Nov. 27, 1981, Ser. No. 325,457

Int. Cl.³ C01B *33/28*

U.S. Cl. 423—329 **11 Claims**

1. The method of obtaining synthetic faujasite in microcrystalline form which comprises mixing an aqueous alkali metal silicate solution with an aqueous alkali metal aluminate solution, at a temperature from below about 10° C. to short of freezing and in proportions of alkali metal silicate and alkali metal aluminate such as to furnish a SiO_2/Al_2O_3 mole ratio in the reaction mixture in the range of from 4 to 10 and to obtain a faujasite structure, adding an additive selected from the group consisting of solid mono- and disaccharides and mixtures thereof in an amount of 1.5 to 5% by weight of the total reaction mixture, initially aging the reaction mixture for 6 to 24 hours at 5° to 50° C. followed by subjecting the aged mixture to increased temperatures in the range of about 25° to 120° C. and above the initial aging temperatures for 2 to 24 hours; thereafter separating the formed microcrystals from the mother liquor.

4,372,932

PROCESS FOR REMOVING SO_x AND NO_x COMPOUNDS FROM GAS STREAMS

Robert H. Hass, Fullerton, Calif., assignor to Union Oil Company of California, Los Angeles, Calif.

Continuation-in-part of Ser. No. 907,189, May 18, 1978, Pat. No. 4,222,991. This application May 21, 1980, Ser. No. 151,783

The portion of the term of this patent subsequent to Sep. 16, 1997, has been disclaimed.

Int. Cl.³ B01D *53/36;* **C01B** *21/02*

U.S. Cl. 423—351 **46 Claims**

1. A process for treating a feed aqueous solution containing one or more nitrogen components selected from the group consisting of nitrite anions and nitrate anions, which process comprises (1) contacting, in the presence of formate ion, said feed aqueous solution with a water insoluble, solid substance containing a tertiary amine functional group under conditions, including an elevated temperature, such that a substantial proportion of said nitrogen components are converted to elemental nitrogen and (2) separating said nitrogen from a product aqueous solution of reduced dissolved nitrogen components content.

4,372,933

PRODUCTION OF ISOCYANIC ACID

Jai H. Kyung, Dublin, and Joseph G. Holehouse, Columbus, both of Ohio, assignors to Ashland Oil, Inc., Ashland, Ky.

Filed Apr. 29, 1982, Ser. No. 373,085

Int. Cl.³ C01C *3/00, 3/14*

U.S. Cl. 423—365 **7 Claims**

1. A process for preparing isocyanic acid which comprises reacting a mixture of nitric oxide, carbon monoxide and hydrogen at a temperature of from about 200° to 400° C. in the presence of iridium or rhodium metal catalyst supported on a particulate carrier selected from the group consisting of silica, γ-alumina, zirconium oxide and silicon carbide, said carrier further characterized in having a surface area, expressed as M^2/g, of not in excess of one, the contact time between said mixture and said catalyst being less than 1 second.

4,372,934

PRODUCTION OF ISOCYANIC ACID

Jai H. Kyung, Dublin, and Phyllis L. Brusky, Columbus, both of Ohio, assignors to Ashland Oil, Inc., Ashland, Ky.

Filed Jun. 7, 1982, Ser. No. 385,422

Int. Cl.³ C01C *3/00, 3/14*

U.S. Cl. 423—365 **8 Claims**

1. A process for preparing isocyanic acid which comprises reacting a mixture of nitric oxide, carbon monoxide and hydrogen at a temperature of from about 200° to 400° C. in the presence of a doped iridium or rhodium metal catalyst supported on a particulate carrier selected from the group consisting of silica, γ-alumina, zirconium oxide and silica carbide, said carrier further characterized in having a surface area, expressed as m^2/g, of not in excess of one, and wherein said dopant is selected from the group consisting of Ni, Zn, Cu, Co, Cr, Fe, Cd and Ag metal with the dopant metal present to the extent of 0.1–2 mol % based on said metal catalyst.

4,372,935

NO_x REMOVAL FROM NO_x/O_2 GASEOUS FEEDSTREAMS

Roger Botton, Lyons, and Dominique Cosserat, Saint Priest, both of France, assignors to Rhone-Poulenc Industries, Paris, France

Filed Jun. 30, 1981, Ser. No. 279,000

Claims priority, application France, Jul. 11, 1980, 80 15461

Int. Cl.³ C01B *21/40*

U.S. Cl. 423—393 **21 Claims**

1. In a process for the removal of nitric oxide, NO, and nitrogen peroxide, NO_2, from gaseous admixtures comprising the same, together with gaseous oxygen, by countercurrently oxidizing/absorbing said gaseous feedstream in aqueous solution, in a gas/liquid phase contactor, and wherein that section of said phase contactor the NO_x content in the gaseous feedstream is less than 6000 vpm, the improvement which comprises that the residence time in said less than 6000 vpm section of said phase contactor, is increased to a value such that the ratio K, of the liquid retention volume in cubic meters in said phase contactor to the rate of flow therein of said gaseous feedstream in Nm^3/hour, in excess of $5 \cdot 10^{-4}$ hour.

4,372,936

PROCESS FOR PRODUCING CARBON BLACK

Vitaly F. Surovikin, ulitsa Lermontova, 20, kv. 80; Alexandr R. Rogov, ulitsa Volochaevskaya, 15-e, kv. 24; Gennady V. Sazhin, ulitsa 50-letia Komsomola, 8, kv. 33, and Georgy L. Gorjunov, ulitsa Truda, 10, kv. 82, all of Omsk, U.S.S.R.

Filed Aug. 29, 1979, Ser. No. 70,791

Int. Cl.³ C01B *31/02;* **C09C** *1/48*

U.S. Cl. 423—450 **8 Claims**

1. A process for producing carbon black, comprising:
combusting a first fuel with air to form a high temperature stream of products of complete combustion of the fuel; .
introducing a hydrocarbon feedstock into said high temperature product stream, said temperature being sufficient to cause thermal decomposition of the hydrocarbon feedstock and the formation of a hot carbon black containing effluent;
recycling about 2 to 26 volume % of the hot carbon black containing effluent, without cooling, to the combustion step as a second fuel to completely replace the first fuel, wherein the the heat of the second fuel is utilized to decompose the hydrocarbon feedstock, and whereby the total yield of carbon black is increased;
introducing a cooling agent into the remaining carbon black effluent product stream, and recovering the carbon black product.

4,372,937

WASTE HEAT RECOVERY

Paul H. Johnson, Bartlesville, Okla., assignor to Phillips Petroleum Company, Bartlesville, Okla.

Division of Ser. No. 141,502, Apr. 18, 1980, Pat. No. 4,296,800. This application Aug. 11, 1981, Ser. No. 292,103

Int. Cl.³ C01B *31/02;* **C09C** *1/48*

U.S. Cl. 423—454 **6 Claims**

1. A process for producing carbon black by pyrolysis of a feed hydrocarbon wherein a gas stream containing carbon black is passed through a means defining a flow path of an indirect heat exchanger, said process comprising preventing the substantial build up of carbon black deposits or cleaning carbon black deposits or both from said means defining a flow path by
(a) providing a fixed bed of fluidizable particulate solids within said indirect heat exchanger,
(b) positioning a shell-tube heat exchange section having a plurality of tubes within said bed of solids in such a manner that said bed of solids extends from below the inlet, through, and above the outlet of the tubes with the heat exchange fluid passing through the shell side and with said gas stream containing carbon black passing through the tubes which contain said particulate solids whereby heat is transferred from the gas stream containing the carbon black to the fluidized particulate solids and by way of the tubes to the shell fluid, said tubes being so sized as to have a length to diameter ratio sufficient to allow both upwardly and downwardly movement of said particulate solids within said tubes,
(c) passing said gas containing carbon black through said bed of solids under conditions which cool said gas and fluidize said bed to maintain the inner peripheries of the tubes substantially freed from carbon black deposits to allow efficient heat exchange, and (d) withdrawing said cooled gas through a gas-solids separator positioned above said bed of solids within the cooling zone to prevent particulate solids from escaping with the cooled gas by recovering same and returning recovered entrained particulate solids to said fixed bed.

4,372,938

PRODUCING SULFUR TETRAFLUORIDE USING AMINE/HYDROGEN FLUORIDE COMPLEX

Yoshio Oda; Hiroshi Otouma, both of Yokohama; Keiichi Uchida, Kawasaki; Shinsuke Morikawa, Yokohama, and Masaaki Ikemura, Yokohama, all of Japan, assignors to Asahi Glass Company Ltd., Tokyo, Japan

Continuation-in-part of Ser. No. 196,655, Oct. 14, 1980, abandoned. This application Apr. 22, 1982, Ser. No. 370,670

Claims priority, application Japan, Oct. 12, 1979, 54-130833; Aug. 1, 1980, 55-105115; Aug. 12, 1980, 55-109808

Int. Cl.³ C01B *17/45;* **C10B** *17/00*

U.S. Cl. 423—469 **10 Claims**

1. A process for producing sulfur tetrafluoride which comprises reacting in the absence or presence of a solvent an amine/hydrogen fluoride complex having the formula:

$$Am.(HF)_n$$

wherein Am represents an amine selected from the group consisting of nitrogen-containing heterocyclic aromatic amines and derivatives thereof, and n represents 2–4, with sulfur dichloride, sulfur monochloride or a combination of chlorine and sulfur at a temperature of 0° to 60° C., the molar ratio of said amine/hydrogen fluoride complex to said sulfur dichloride, sulfur monochloride or sulfur being represented by the formula:

$$\frac{B}{n \times A} > 0.5$$

wherein n is as defined above, A represents moles of sulfur in said sulfur dichloride, sulfur monochloride or sulfur, and B represents moles of said amine/hydrogen fluoride complex.

4,372,939

PROCESS OF PRODUCING CHLORINE DIOXIDE

Siegfried Bielz, Frankfurt am Main; Paul Janisch, Steinau, and Karl Lohrberg, Heusenstamm, all of Fed. Rep. of Germany, assignors to Metallgesellschaft Aktiengesellschaft, Frankfurt am Main, Fed. Rep. of Germany

Continuation of Ser. No. 142,909, Apr. 23, 1980, abandoned. This application Jun. 12, 1981, Ser. No. 272,856

Claims priority, application Fed. Rep. of Germany, Apr. 27, 1979, 2917132

Int. Cl.³ C01B *11/02*

U.S. Cl. 423—478 **13 Claims**

1. In the continuous production of chlorine dioxide containing gases wherein an alkali metal chlorate solution is reacted

with hydrochloric acid in a reactor through which an air stream is passed countercurrent to the alkali metal chlorate solution, the chlorine dioxide is removed from said gases and virtually chlorine dioxide free gases are at least partially burned in the presence of hydrogen to form HCl and there are discharged from the reactor chlorine dioxide and alkali metal

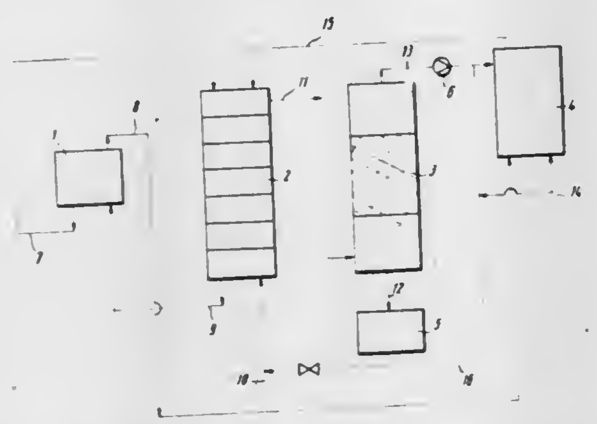

chloride solution, the improvement which comprises adding chlorine gas to the air stream in an amount of at least 18 volume percent, said amount of chlorine also being at least equal to that in which chlorine is discharged from the reactor in the form of chlorine dioxide, thereby permitting the overall efficiency of the process to be increased at a given content of chlorine dioxide in the gas discharged from the reactor.

4,372,940

PROCESS AND APPARATUS FOR TREATMENT OF THIOSULFATE CONTAINING LIQUORS

Bruce L. Brandenburg, Wausau, and Gerald L. Bauer, Rothschild, both of Wis., assignors to Sterling Drug Inc., New York, N.Y.

Filed Oct. 26, 1981, Ser. No. 314,860

Int. Cl.^{3} C01B *17/02*

U.S. Cl. 423—567 A **14 Claims**

1. A process for treating thiosulfate containing liquors by wet oxidation, comprising the steps of:

a. subjecting said thiosulfate containing liquors to a first wet oxidation step at a temperature sufficient to oxidize a portion of said thiosulfate to sulfuric acid and sulfate and to decompose remaining thiosulfate to sulfite and elemental sulfur;

b. concentrating and removing said elemental sulfur from the wet oxidized liquors of step (a); and

c. subjecting the wet oxidized liquors from step (b) to a second wet oxidation step at a temperature sufficient to achieve substantial destruction of sulfur, organic matter and other oxidizable substances in said liquors.

4,372,941

NOVEL RADIOASSAY PROCEDURE

James W. Ryan, 3420 Poinciana Ave., Dade County, Miami, Fla. 33133

Filed Sep. 5, 1980, Ser. No. 184,653

Int. Cl.^{3} A61K *43/00*

U.S. Cl. 424—1 **23 Claims**

1. A method for the detection of enzymic activity in biological material by an assay procedure comprising the steps of:

mixing a radiolabelled substrate for the enzyme with the biological material in a vial of no more than 20 ml. volume under conditions where the enzyme to be detected is catalytically active if present in the substrate,

incubating the biological material—substrate mixture in said vial to permit the enzyme if present to catalyze the hydrolysis of the substrate,

stopping the hydrolysis by adding to said vial an agent effective for that purpose,

mixing in said vial the incubated material containing the hydrolyzed substrate from the preceding step with at least one organic solvent for a radiolabelled hydrolysis remnant product of the substrate that does not dissolve the substrate which also contains a scintillant in sufficient quantity to permit measurement,

permitting the mixture in said vial to separate on its own, without centrifugation into an aqueous phase containing unreacted substrate and an organic phase containing radiolabelled remnant product, and

measuring the radioactivity of the radiolabelled remnant product in the organic phase.

4,372,942

CANDY BASE AND LIQUID CENTER HARD CANDY MADE THEREFROM

Paul A. Cimiluca, Succasunna, N.J., assignor to Beecham Inc., Clifton, N.J.

Filed Aug. 13, 1981, Ser. No. 292,482

Int. Cl.^{3} A23G *9/00;* **A61K** *27/00*

U.S. Cl. 424—16 **16 Claims**

1. A candy base which comprises, before cooking, from about 35 to about 60%, by weight, sucrose, from about 55 to about 35%, by weight, corn syrup and from about 1 to about 10% by weight of a fluidizing agent selected from the group consisting of mannitol and a mixture of mannitol and sorbitol having a weight ratio of mannitol to sorbitol of at least about 1:1.

4,372,943

NOVEL PESTICIDAL FORMULATION

Steven C. Papanu, and Ralston Curtis, both of Los Altos, Calif., assignors to Zoecon Corporation, Palo Alto, Calif.

Continuation-in-part of Ser. No. 228,419, Jan. 26, 1981, abandoned. This application Nov. 30, 1981, Ser. No. 325,955

Int. Cl.^{3} A61K *31/74;* **A01N** *25/22, 37/34*

U.S. Cl. 424—78 **10 Claims**

1. A stable pesticidal oil-in-water concentrate free from thickeners and consisting essentially of:

(a) 1 to 50% by weight of α-cyano-3-phenoxybenzyl 2-(2-chloro-4-trifluoromethylphenylamino)-3-methylbutanoate dispersed as particles having an average size less than 1 micron;

(b) 2 to 20% by weight of polyvinyl alcohol having a molecular weight of from 2,000 to 125,000 and having from 11 to 28% of its hydroxy groups present as the acetate ester;

(c) the balance being water; and

the emulsion being freeze-thaw stable, 50 degrees Centigrade storage stable and water dispersable.

4,372,944

COSMETIC CREAM FORMULATION

Anne M. Herrold, Brownsburg, Ind., assignor to Eli Lilly and Company, Indianapolis, Ind.

Filed Aug. 3, 1981, Ser. No. 289,653

Int. Cl.^{3} A61K *31/745, 47/00*

U.S. Cl. 424—83 **1 Claim**

1. A cosmetic cream formulation consisting essentially of, in percent by weight:

Ingredients	Percent
white beeswax	2.00
distilled lanolin alcohols	0.50
white petrolatum	2.00
triglyceryl diisostearate	5.50
squalane (2,6,10,15,19,23-hexamethyl-tetracosane)	5.00
light mineral oil	6.00
isopropyl myristate	5.00
polyethylene homopolymer (1500 m. wt., density 0.91 g/cc)	3.00
polydimethylcyclosiloxane	3.00
quaternary bentonite (Bentone. No. 38)	0.40

-continued

Ingredients	Percent
70% sorbitol solution	5.00
glyoxyldiureide	0.50
preservative	q.s.
deionized water	q.s. to 100%

4,372,945

ANTIGEN COMPOUNDS

Vilas V. Likhite, 317 Marlborough St., Boston, Mass. 02116

Continuation of Ser. No. 93,171, Nov. 13, 1979, Pat. No. 4,285,930, which is a continuation of Ser. No. 858,847, Nov. 7, 1977, abandoned. This application Aug. 3, 1981, Ser. No. 289,138

Int. Cl.^{3} A61K *39/10, 39/00*

U.S. Cl. 424—92 **4 Claims**

1. An antigen compound useful in the production of an antigen conjugate compound for producing relatively large titers of antibodies specific thereto, which compound comprises a killed strain of *B. pertussis* mutant strain NRRL B-11, 232 coupled to one reactive NCO site of a diisocyanate-coupling agent leaving the other reactive NCO site adapted to be coupled to another antigen.

4,372,946

CLAVULANIC ACID DERIVATIVES THEIR PREPARATION AND USE

Thomas T. Howarth, Reigate, and Eric Hunt, Betchworth, both of England, assignors to Beecham Group Limited, England

Division of Ser. No. 942,348, Sep. 14, 1978, Pat. No. 4,244,965. This application Jul. 9, 1980, Ser. No. 167,378

Int. Cl.^{3} A61K *35/00*

U.S. Cl. 424—114 **84 Claims**

43. A method of treating bacterial infections in humans and animals which comprises administering to a human or animal in need thereof a synergistically effective amount of a compound of the formula (I):

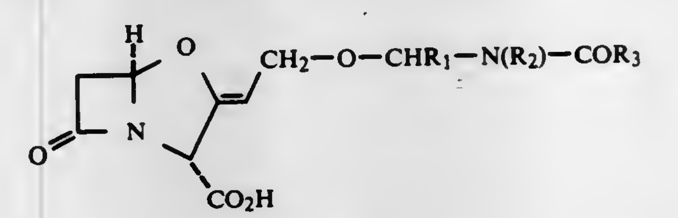

(I)

or a pharmaceutically acceptable salt or pharmaceutically acceptable ester thereof wherein R_3 is joined to R_1 to form a 4-, 5- or 6-membered ring or is joined to R_2 to form a 5- or 6-membered ring wherein R_1 is hydrogen or lower alkyl and R_2 and R_3 are hydrogen, lower alkyl or lower alkyl substituted by lower alkoxy, aryloxy, carboxylic acid or a pharmaceutically acceptable salt or lower alkyl or aralkyl ester thereof, or by amino or aryl with the proviso that when R_2 is hydrogen, R_1 is not hydrogen and R_1 and R_3 are not joined to form a group of the sub-formula (a):

wherein R_4 is hydrogen or NH.CO.R_5 wherein R_5 is lower alkyl, lower alkoxy, lower alkyl, aryl, aralkyl, aryloxyalkyl, lower alkoxy or aryloxy, and an antibacterially effective amount of amoxycillin or a pharmaceutically acceptable salt thereof, in combination with a pharmaceutically acceptable carrier.

4,372,947

ANTIBIOTIC SAFRAMYCIN S AND PROCESS FOR PRODUCING THE SAME

Tadashi Arai, 6-50-6, Nogata, Nakano-ku, Tokyo, Japan; Katsuhiro Takahashi, Tokyo, Japan; Kimiko Ishiguro, Kamagaya, Japan, and Koji Yokoyama, Chiba, Japan, assignors to Tadashi Arai, Tokyo, Japan

Filed Sep. 23, 1980, Ser. No. 189,756

Claims priority, application Japan, Mar. 26, 1980, 55-38403

Int. Cl.^{3} A61K *35/00;* **C07D** *521/00;* **C12P** *1/06*

U.S. Cl. 424—121 **2 Claims**

1. An antibiotic substance, saframycin S, having the following physico-chemical characteristics:

color and appearance:
dark yellow powder;
melting point:
107°–115° C.;
specific rotation:
$[\alpha]_D^{25} = +32.5$ (0.5 methanol);
elementary analysis:
C: 61.09%, H: 6.67%, N: 7.49%
C: 61.45%, H: 6.18%, N: 7.48%
molecular weight:
553;
empirical formula:
$C_{28}H_{30}N_3O_8^+.OH^-$
ultraviolet absorption spectrum as shown in FIG. 1:
UV λ_{max}^{MeOH} nm (log ε): 268 (4.21)
UV λ_{min}^{MeOH} nm (log ε): 234 (3.92);
infrared absorption spectrum as shown in FIG. 2:
IR $_{max}^{CHCl_3}$ cm^{-1}: 3400, 1720, 1680, 1650
NMR spectrum (C_6D_5N) as shown in FIG. 3:
δ: 1.88 (3H, s), 2.30 (3H, s),
2.48 (3H, s), 2.72 (3H, s),
3.82 (3H, s), 3.85 (3H, s),
5.46 (1H, s).

or a pharmaceutically acceptable acid addition salt thereof.

4,372,948

DERIVATIVE OF SACCHARIDE AND PHYSIOLOGICALLY ACTIVE AGENT CONTAINING THE SAME

Chikao Yoshikumi, Kunitachi; Fumio Hirose, Tokyo; Yoshio Ohmura, Funabashi; Takayoshi Fujii, Tokyo; Masanori Ikuzawa, Tachikawa; Kenichi Matsunaga, Tokyo; Takao Ando, Tokyo, and Minoru Ohhara, Tokyo, all of Japan, assignors to Kureha Kagaku Kogyo Kabushiki Kaisha, Tokyo, Japan

Filed Mar. 25, 1981, Ser. No. 247,521

Claims priority, application Japan, Apr. 11, 1980, 55-47654

Int. Cl.^{3} A61K *31/70;* **C08B** *37/00*

U.S. Cl. 424—180 **36 Claims**

1. Derivatives of a saccharide, represented by the general formula (I)

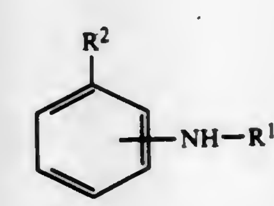

(I)

wherein R^1 represents a residual group formed by removing one hydroxyl group from the reducing end of a monosaccharide, disaccharide or trisaccharide; R^2 represents

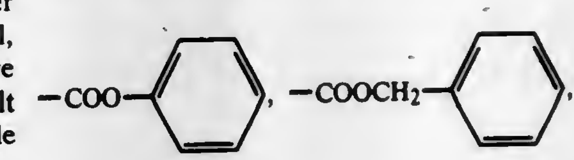

-continued

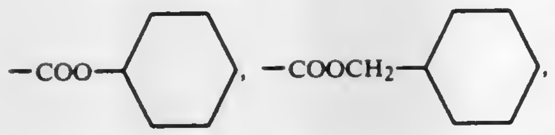

—$CONH_2$ or —CH_2COOR^3 and R^3 represents a hydrogen atom, an alkyl of one to four carbon atoms or an equivalent of pharmaceutically acceptable metal.

4,372,949

TREATMENT OF CANCER WITH CARCINOSTATIC AND IMMUNOSTIMULATING AGENT CONTAINING LYSOPHOSPHOLIPID AND PHOSPHOLIPID

Yutaka Kodama; Kaoru Oyama, both of Toyama; Ryusaku Shimizu, Nanao; Masao Nakabayashi, Namekawa; Yoshifumi Nakashima, Himi; Takashi Sano; Masaaki Shibata, both of Toyama, and Kiyoshi Goden, Takaoka, all of Japan, assignors to Toyama Chemical Co., Ltd., Tokyo, Japan

Filed Feb. 29, 1980, Ser. No. 125,800

Claims priority, application Japan, Mar. 5, 1979, 54/24600; Sep. 14, 1979, 54-117262

Int. Cl.[3] A61K *31/685, 45/05*

U.S. Cl. 424—199 9 Claims

1. A method for treating a host mammal having cancer, which comprises administering to said host mammal a therapeutically effective amount of a composition comprising a lysophospholipid and a phospholipid in an amount of 1 part by weight of lysophospholidpid to from 1.0–500 parts by weight of phospholipid.

2. The method according to claim 1, wherein the composition is in the form of lipid vesicles.

4,372,950

Patent Not Issued For This Number

4,372,951

VAGINAL DELIVERY FOR PHYSIOLOGIC FOLLICULAR-LUTEAL STEROID TREATMENT

Nichols Vorys, 1450 Hawthorne Ave., Columbus, Ohio 43203

Continuation-in-part of Ser. No. 83,636, Oct. 11, 1979, Pat. No. 4,291,028, which is a continuation of Ser. No. 865,851, Dec. 30, 1977, abandoned. This application Jul. 21, 1981, Ser. No. 285,590

Int. Cl.[3] A61K *31/56*

U.S. Cl. 424—239 15 Claims

1. A method of regulation of the menstrual cycle in which effective dosages of pharmacologically active steroid compositions selected from the group of estrogenic active steroids and progestational active steroids are administered in a temporal succession in a correspondence with a first follicular phase and a following luteal phase in an approximately 28 day menstrual cycle, in which, dosage of the follicular phase is dependent upon the presenting endogenous estrogen characteristic of the patient, and the luteal phase includes:

a vaginal delivery system which provides effective concurrent dosages of (1) a pharmacologically active steroid selected from the group of estrogen active steroids and (2) a pharmacologically active steroid selected from the group of progestational active steroids, administered together, for a finite period of time of approximately 14 days during the luteal phase of the drug administration cycle, whereby predictable physiologic levels of activity of each steroid administered are provided during the luteal phase of the drug administration cycle.

4,372,952

CEPHEM COMPOUNDS

Takao Takaya, Kawanishi; Hisashi Takasugi, Kohamanishi; Toshiyuki Chiba, Higashinari, and Kiyoshi Tsuji, Sumiyoshi, all of Japan, assignors to Fujisawa Pharmaceutical Co., Ltd., Osaka, Japan

Division of Ser. No. 59,893, Jul. 23, 1979, Pat. No. 4,284,631. This application Apr. 10, 1981, Ser. No. 253,026

Int. Cl.[3] C07D *501/22;* A61K *31/545*

U.S. Cl. 424—246 11 Claims

1. A compound of the formula:

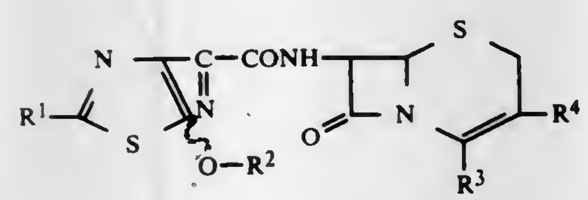

(I)

wherein

R^1 is amino or protected amino,

R^2 is lower alkyl of from one to six carbon atoms substituted with aryl hydrocarbon of from 6 to 10 carbon atoms or substituted aryl hydrocarbon with at least one halogen, hydroxy, amino (lower) alkyl, amido (lower) alkyl, or lower alkyl substituent,

R^3 is carboxy or protected carboxy, and

R^4 is hydrogen,

and its pharmaceutically acceptable salt.

4,372,953

TETRAZOLE DERIVATIVES, AND ANTI-ULCER COMPOSITION CONTAINING THE SAME

Minoru Uchida, Komatsujima; Takao Nishi, and Kazuyuki Nakagawa, both of Tokushima, all of Japan, assignors to Otsuka Pharmaceutical Company, Limited, Tokyo, Japan

Filed Feb. 27, 1981, Ser. No. 239,044

Claims priority, application Japan, Feb. 29, 1980, 55-25521; Mar. 1, 1980, 55-25707; Mar. 1, 1980, 55-25708; Mar. 3, 1980, 55-27084; Sep. 16, 1980, 55-128160; Sep. 30, 1980, 55-136902; Oct. 6, 1980, 55-140051

Int. Cl.[3] A61K *31/41, 31/44, 31/445, 31/505;* C07D *257/04, 401/12, 401/14, 401/06*

U.S. Cl. 424—248.5 24 Claims

1. A tetrazole derivative of the formula:

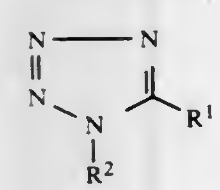

wherein R^1 is a lower alkyl, phenyl or a group of the formula: —$S(O)_l$—A—$(X)_m$—R^3, and R^2 is hydrogen, a lower alkyl, phenyl or a cycloalkyl when R^1 is the group —$S(O)_l$—A—$(X)_m$—R^3, or R^2 is a group of the formula: —B—CO—R^4 when R^1 is a lower alkyl or phenyl; in said formula —$S(O)_l$—A—$(X)_m$—R^3, X is —CO— or S—$(O)_n$—, l and n are each 0, 1 or 2, m is 0 or 1, A is an alkylene having 1 to 8 carbon atoms, and R^3 is a lower alkyl, a cycloalkyl, naphthyl, a group of the formula:

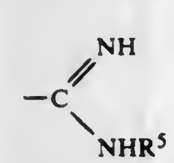

(R^5 is a lower alkyl), a phenyl(lower)alkyl which may have a halogen substituent on the phenyl ring, a pheny which may have 1 to 3 substituents selected from the group consisting of a halogen, a lower alkyl, a lower alkoxy, a lower alkanoylamino, hydroxy, carboxy and amino, a heterocyclic group-substituted lower alkyl which may have a substituent selected from a lower alkyl and amino wherein the heterocyclic group is selected from pyridyl, furyl, and thiazolyl, or a heterocyclic group containing 1 to 4 hetero atoms selected from nitrogen, oxygen and sulfur which may have 1 to 2 substituents selected from the group consisting of a lower alkyl, a halogen, carboxy, oxo, amino, a lower alkoxycarbonyl, a lower alkoxy, hydroxy, nitro, phenyl, a cycloalkyl and a lower alkylamino, wherein the heterocyclic group containing 1 to 4 hetero atoms is selected from thienyl, furyl, pyrrolyl, pyridyl, pyranyl, pyrimidyl, quinolyl, 1,2,3,4-tetrahydroquinolyl, imidazolyl, 1,3,4-thiadiazolyl, 1,3,4-oxadiazolyl, 1H-1,2,4-triazolyl, 4H-1,2,4-triazolyl, thiazolyl, 1,2,3,4-tetrazolyl, benzimidazolyl, quinazolyl, 2,4-dihydroquinazolyl, and 3H,4H-1,3,4-benzotriazepinyl, and when m is 0, R^3 may also be a group of the formula: —NR^6R^7 wherein R^6 is hydrogen, a lower alkyl or a phenyl llower)alkyl, and R^7 is hydrogen, a lower alkyl, a group —C-Z—NHR^8 (Z is sulfur or an imino which may be substituted with a lower alkyl, and R^8 is a lower alkyl or imino), a tetrazolyl which may have a lower alkyl substituent, or a group —CO—R^9, wherein R^9 is a lower alkyl, a phenyl which may have 1 to 3 lower alkoxy substituents, a cycloalkyl or a 5- or 6-membered unsaturated heterocyclic group containing one hetero atom selected from nitrogen and oxygen, which group is pyridyl, pyranyl, pyrrolyl or furyl, or the R^6 and R^7 may combine together with the nitrogen atom to which they are joined to form a group

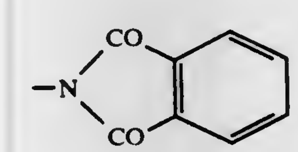

in said formula —B—CO—R^4, B is a lower alkylene, and R^4 is a group of the formula: —$NR^{10}R^{11}$ wherein R^{10} and R^{11} are the same or different and are each a lower alkyl (which may have a substituent selected from the group consisting of hydroxy, furyl, pyridyl, phenyl and a phenyl having 1 to 2 lower alkoxy substituents), a cycloalkyl (which may have a substituent selected from the group consisting of hydroxy or a lower alkoxy), a phenyl (which may have 1 to 2 substituents selected from the group consisting of a lower alkyl, a lower alkoxy, a halogen, nitro, carboxy and a lower alkylamino), or a thiazolyl, or the R^{10} and R^{11} may combine together with the nitrogen atoms to which they are joined with or without being intervened with nitrogen or oxygen to form a 5- or 6-membered saturated heterocyclic group selected from pyrrolidino, morpholino, 1-piperidyl and 1-piperazinyl which may have a lower alkyl substituent,

provided that when m is 0, R^3 is not substituted phenyl(lower)alkyl or unsubstituted phenyl,

and provided that when B is methylene or dimethylmethylene (—$C(CH_3)_2$—), R^4 excludes di-(lower)alkylamino and 1-piperidyl,

or a pharmaceutically acceptable salt thereof.

24. An anti-ulcer composition, which comprises as active ingredient an effective amount of a tetrazole derivative of the formula:

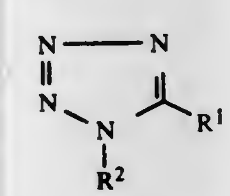

(1)

wherein R^1 is a lower alkyl, phenyl or a group of the formula: —$S(O)_l$—A—$(X)_m$—R^3, and R^2 is hydrogen, a lower alkyl, phenyl or a cycloalkyl when R^1 is the group —$S(O)_l$—A—$(X)_m$—R^3, or R^2 is a group of the formula: —B—CO—R^4 when R^1 is a lower alkyl or phenyl; in said formula —$S(O)_l$—A—$(X)_m$—R^3, X is —CO— or S—$(O)_n$—, l and n are each 0, 1 or 2, m is 0 or 1, A is an alkylene having 1 to 8 carbon atoms, and R^3 is a lower alkyl, a cycloalkyl, naphthyl, a group of the formula:

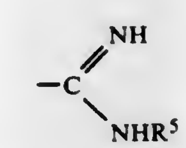

(R^5 is a lower alkyl), a phenyl(lower)alkyl which may have a halogen substituent on the phenyl ring, a phenyl which may have 1 to 3 substituents selected from the group consisting of a halogen, a lower alkyl, a lower alkoxy, a lower alkanoylamino, hydroxy, carboxy and amino, a heterocyclic group-substituted lower alkyl which may have a substituent selected from a lower alkyl and amino wherein the heterocyclic group is selected from pyridyl, furyl and thiazolyl, or a heterocyclic group containing 1 to 4 hetero atoms selected from nitrogen, oxygen and sulfur which may have 1 to 2 substituents selected from the group consisting of a lower alkyl, a halogen, carboxy, oxo, amino, a lower alkoxycarbonyl, a lower alkoxy, hydroxy, nitro, phenyl, a cycloalkyl and a lower alkylamino, wherein the heterocyclic group containing 1 to 4 hetero atoms is selected from thienyl, furyl, pyrrolyl, pyridyl, pyranyl, pyrimidyl, quinolyl, 1,2,3,4-tetrahydroquinolyl, imidazolyl, 1,3,4-thiadiazolyl, 1,3,4-oxadiazolyl, 1H-1,2,4-triazolyl, 4H-1,2,4-triazolyl, thiazolyl, 1,2,3,4-tetrazolyl, benzimidazolyl, quinazolyl, 2,4-dihydroquinazolyl, and 3H,4H-1,3,4-benzotriazepinyl, and when m is 0, R^3 may also be a group of the formula: —NR^6R^7 wherein R^6 is hydrogen, a lower alkyl or a phenyl(-lower)alkyl, and R^7 is hydrogen, a lower alkyl, a group —C-Z—NHR^8 (Z is sulfur or an imino which may be substituted with a lower alkyl, and R^8 is a lower alkyl or amino, a tetrazolyl which may have a lower alkyl substituent, or a group —CO—R^9, wherein R^9 is a lower alkyl, a phenyl which may have 1 to 3 lower alkoxy substituents, a cycloalkyl or a 5- or 6-membered unsaturated heterocyclic group containing one hetero atom selected from nitrogen and oxygen, said group being pyrrolidino, morpholino, 1-piperidinyl or 1-piperazinyl, or the R^6 and R^7 may combine together with the nitrogen atom to which they are joined to form a group

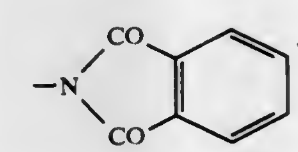

in said formula —B—CO—R^4, B is a lower alkylene, and R^4 is a group of the formula: —$NR^{10}R^{11}$ wherein R^{10} and R^{11} are the same or different and are each a lower alkyl (which may have a substituent selected from the group consisting of hydroxy, furyl, pyridyl, phenyl and a phenyl having 1 to 2 lower alkoxy substituents), a cycloalkyl (which may have a substituent selected from the group consisting of hydroxy or a lower alkoxy), a phenyl (which may have 1 to 2 substituents selected from the group consisting of a lower alkyl, a lower alkoxy, a halogen, nitro, carboxy and a lower alkylamino), or a thiazolyl, or the R^{10} and R^{11} may combine together with the nitrogen atom to which they are joined with or without being intervened with nitrogen or oxygen to form a 5- or 6-membered saturated heterocyclic group which may have a lower alkyl substituent, provided that when m is 0, R^3 is not unsubstituted phenyl(lower)alkyl or unsubstituted phenyl, and provided that when B is methylene or dimethylmethylene (—$C(CH_3)_2$—), R^4 excludes di-(lower)alkylamino and 1-piperidyl, or a pharmaceutically acceptable salt thereof in admixture with a carrier or diluent.

4,372,954

MOROXYDINE PHENOXYISOBUTYRATES AND METHOD OF USE

Pierre D. Moreau, 61 Grande Rue, Bessancourt, France (95550), and Nils A. Jonsson, Jungfrudansen 15, Solna S-171 56, Sweden

PCT No. PCT/FR81/00012, § 371 Date Oct. 1, 1981, § 102(e) Date Oct. 1, 1981, PCT Pub. No. WO81/02295, PCT Pub. Date Aug. 20, 1981

PCT Filed Feb. 5, 1981, Ser. No. 308,546

Claims priority, application France, Feb. 11, 1980, 80 02927; Jan. 14, 1981, 81 00522

Int. Cl.³ A61K *31/535;* C07D *295/14*

U.S. Cl. 424—248.53 4 Claims

1. Moroxydine phenoxyisobutyrates corresponding to the following general formula:

(I)

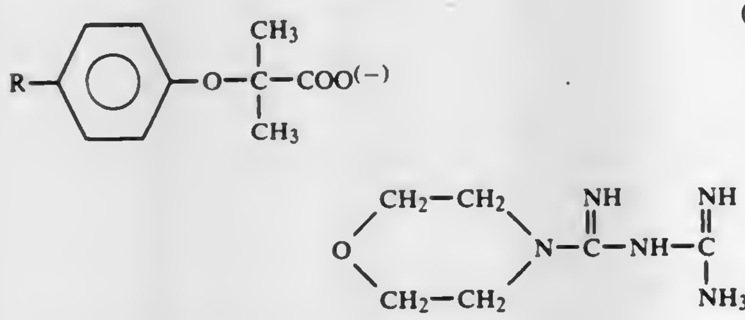

in which R represents a chlorine atom or a

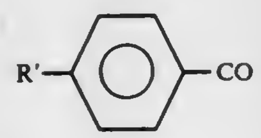

group, R′ being a chlorine atom.

4. Method of inhibiting platelet aggregation and lowering fibrinogen in mammals, comprising administering an efficient quantity of a moroxydine phenoxyisobutyrate according to claim 1, 2 or 3 to the animal.

4,372,955

ANTI-ARRYTHMIC SULPHONAMIDE COMPOSITIONS

Ljerka Jozic, Hanover, Fed. Rep. of Germany, assignor to Johann A. Wuelfing, Fed. Rep. of Germany

Division of Ser. No. 148,139, May 9, 1980, abandoned. This application Mar. 12, 1982, Ser. No. 357,468

Claims priority, application United Kingdom, May 16, 1979, 7917035

Int. Cl.³ A61K *31/495, 31/445, 31/40*

U.S. Cl. 424—250 3 Claims

1. An anti-arrythmic composition comprising a carrier and an anti-arrythmic amount of a compound of the formula (I):

$$R_2N{-}(CH_2)_n{-}NH{-}SO_2R^1 \qquad (I)$$

or a pharmaceutically acceptable salt or acid addition salt with a pharmaceutically acceptable acid, wherein NR_2 is 2,6- or 3,5-dimethylpiperidyl, pyrrolidyl, cis-2,4- or cis-2,5-dimethylpyrrolidyl, N-methylpiperazyl or 2-methylpiperidyl; n is 2 or 3; and R^1 is 1-naphthyl unsubstituted or substituted by methyl, methoxyl, methoxycarbonyl or ethoxycarbonyl or amino optionally substituted by one or two C_{1-6} alkyl groups.

4,372,956

5, 10-DIHYDROIMIDAZO[2,1-B]QUINAZOLINES AND PHARMACEUTICAL COMPOSITIONS CONTAINING THEM

Hans Ott, Pfeffingen, Switzerland, assignor to Sandoz Ltd., Basel, Switzerland

Filed Nov. 18, 1980, Ser. No. 207,903

Claims priority, application Switzerland, Nov. 24, 1979, 10453/79

Int. Cl.³ A61K *31/505;* C07D *487/04*

U.S. Cl. 424—251 25 Claims

1. A compound of formula I

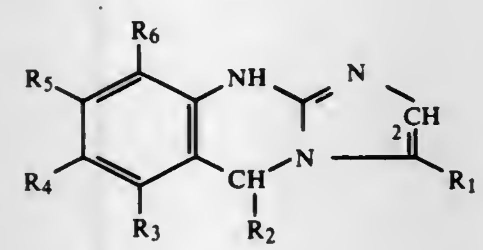

1

in which

R_1 is H, (C_{1-4})alkyl, phenyl or (C_{7-11}) phenylalkyl, the phenyl ring of the last two radicals being unsubstituted or mono- or independently di-substituted by (C_{1-4})alkyl or -alkoxy or by halogen,

R_2 is H, (C_{1-4})alkyl, phenyl or phenyl, mono- or independently di-substituted by (C_{1-4})alkyl or -alkoxy or by halogen and one of

R_3 to R_6 is H and the remaining radicals R_3 to R_6 independently are H, (C_{1-4})alkyl or -alkoxy, hydroxy, halogen and if desired any two adjacent remaining radicals R_3 to R_6 represent $—OCH_2O—$

with the proviso that at least one of the radicals R_1 to R_6 is other than H or pharmaceutically acceptable acid addition salt form.

3. A pharmaceutical composition useful in treating heart insufficiency, inducing a cardiotonic or vasodilating effect or inhibiting blood platelet aggregation which comprises a compound of claim 1 in association with a pharmaceutical carrier or diluent.

4. A method of treating heart insufficiency, including a cardiotonic or vasodilating effect or inhibiting blood platlet aggregation, which comprises administering a therapeutically effective amount of a compound of claim 1 to a subject in need of such treatment.

4,372,957

TREATMENT WITH DIALKOXY PYRIDOPYRIMIDINES

David S. Duch, Cary; Charles A. Nichol, Durham, and Carl W. Sigel, Raleigh, all of N.C., assignors to Burroughs Wellcome Co., Research Triangle Park, N.C.

Continuation of Ser. No. 159,243, Jun. 13, 1980, abandoned. This application Jan. 23, 1981, Ser. No. 228,164

Claims priority, application United Kingdom, Jun. 14, 1979, 7920703

Int. Cl.³ A61K *31/505*

U.S. Cl. 424—251 7 Claims

1. A method of treating psoriasis in a mammal suffering from psoriasis comprising the administration to said mammal of a non-toxic, effective antipsoriasis amount of a compound of formula (II):

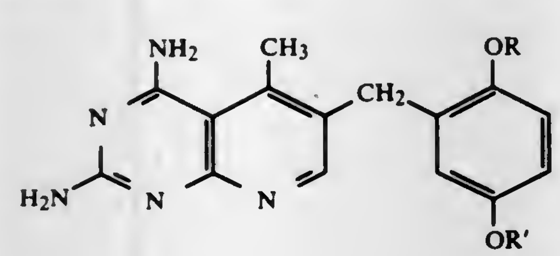

(II)

wherein R and R′ are lower $(C_1–C_6)$ alkyl, or a pharmaceutically acceptable acid addition salt thereof.

4,372,958

COMPOUND HAVING ANTITUSSIVE ACTIVITY

Vittorio Pestellini; Mario Ghelardoni, both of Florence; Danilo Giannotti, Lucca; Alberto Meli, and Carlo A. Maggi, both of Florence, all of Italy, assignors to A. Menarini S.A.S., Italy

Filed Jun. 10, 1981, Ser. No. 272,281

Claims priority, application Italy, Feb. 25, 1981, 9343 A/81

Int. Cl.³ A61K *31/52;* C07D *473/08*

U.S. Cl. 424—253 4 Claims

1. 3(4-phenyl-1-piperazinio-1-yl)-1,2-propanediol 3(theophyllin-7-yl)-1-propanesulphonate.

2. A drug having antitussive action which contains an antitussive effective amount of the compound 3 (4-phenyl-1-piperazinio-1-yl)-1,2-propanediol 3(theophyllin-7-yl)-1-propanesulphonate.

4,372,959

1-(5-OXOHEXYL)-3-ALKYL-7-(2-OXOPROPYL)XANTHINES

Joachim E. Goring, Gronau, Fed. Rep. of Germany, assignor to Beecham-Wulfing GmbH & Co. KG, Fed. Rep. of Germany

Filed Jun. 17, 1981, Ser. No. 274,524

Claims priority, application United Kingdom, Jun. 21, 1980, 8020418

Int. Cl.³ A61K *31/52;* C07D *473/04*

U.S. Cl. 424—253 6 Claims

1. A compound of the formula (I):

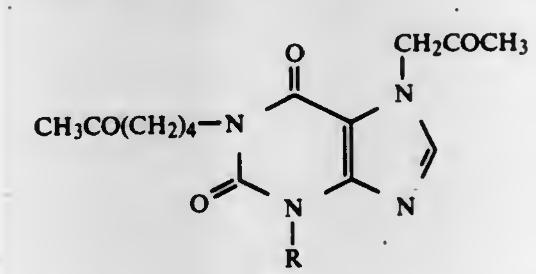

(I)

wherein R is alkyl of 1 to 4 carbon atoms.

5. A pharmaceutical composition for the treatment of peripheral vascular diseases in mammals, which comprises a therapeutically effective amount of a compound of claim 1 and a pharmaceutically acceptable carrier.

4,372,960

QUATERNARY DERIVATIVES OF N-(SUBSTITUTED-AMINOALKYL)-2-OXO-1-PYRROLIDINE-ACETAMIDES AS COGNITION ACTIVATORS

Yvon J. L'Italien, Plymouth, Mich., assignor to Warner-Lambert Company, Morris Plains, N.J.

Filed Dec. 12, 1980, Ser. No. 215,959

Int. Cl.³ A61K *31/40, 31/445;* C07D *207/27, 401/12*

U.S. Cl. 424—267 12 Claims

1. A compound having the structural formula:

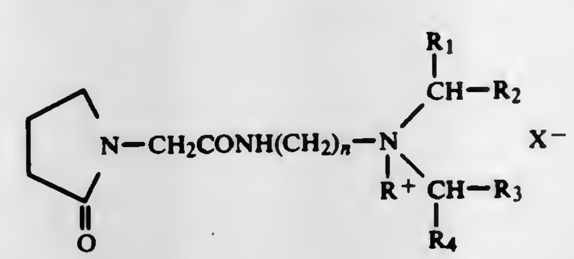

wherein R is alkyl of from 1 to 3 carbon atoms, R_1 and R_4 may be the same or different and are hydrogen or methyl; R_2 and R_3 may be the same or different and are hydrogen, alkyl of from 1 to 3 carbon atoms or when taken together can complete a pyrrolidine, piperidine, morpholine or piperazine ring; n is an integer of from 1 to 3; X^- is a pharmaceutically acceptable anion; with the proviso that when R is n-C_3H_7, n is 2 and X^- is I; then R_1–R_4 may not all be hydrogen.

4,372,961

DERIVATIVES OF RIFAMYCINS, THEIR PREPARATION AND PHARMACEUTICAL COMPOSITIONS THEREOF

Tiberio Bruzzese, Via Frua 21/6, Milan, Italy (20146), and Lorenzo Ferrari, Via Biella 8, Milan, Italy (20143)

Filed Jul. 17, 1981, Ser. No. 284,565

Claims priority, application United Kingdom, Jul. 18, 1980, 8023606

Int. Cl.³ A61K *31/445;* C07D *498/20*

U.S. Cl. 424—267 3 Claims

1. A compound of the formula:

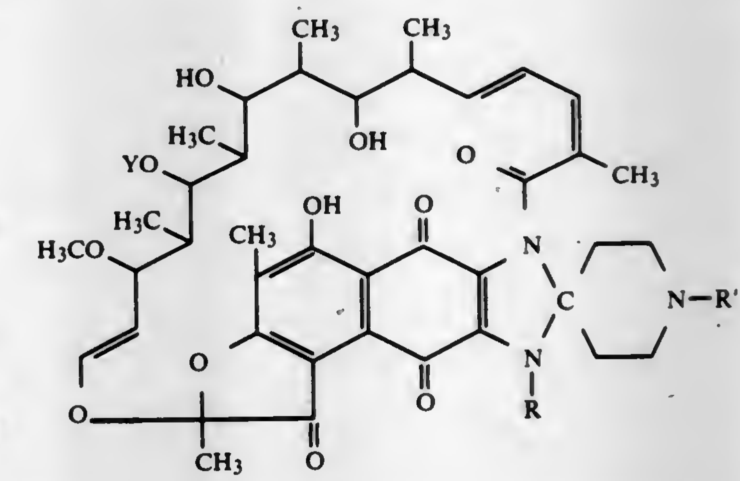

wherein Y is a hydrogen atom or an acetyl radical, R is a hydrogen atom, a straight-chained or branched, saturated or monoolefinically unsaturated aliphatic hydrocarbon radical, containing up to 5 carbon atoms, which can be substituted by hydroxyl or amino groups, a phenyl radical which can be substituted by hydroxyl, amino or by carboxyl groups, a benzyl or phenethyl radical or a cycloalkyl radical containing 3 to 6 carbon atoms and R′ is a hydrogen atom, a straight-chained or branched saturated or monoolefinically unsaturated aliphatic hydrocarbon radical, containing up to 8 carbon atoms, which can be substituted by hydroxyl or by amino groups, a cycloalkyl radical containing 3 to 6 carbon atoms or a benzyl or phenethyl radical; and the pharmacologically acceptable salts thereof.

3. Compositions with an antibiotic activity against gram-positive microorganisms comprising an antibiotically-effective amount of at least one compound of the general formula given in claim 1, in admixture with a solid or liquid pharmaceutical diluent or carrier.

4,372,962

CLAVULANIC ACID DERIVATIVES THEIR PREPARATION AND USE

John S. Davies, and Gerald Brooks, both of Reigate, England, assignors to Beecham Group Limited, England

Filed May 13, 1980, Ser. No. 149,322

Claims priority, application United Kingdom, May 17, 1979, 7917210

Int. Cl.³ C07D *498/04;* A61K *31/42*

U.S. Cl. 424—272 120 Claims

1. A compound of the formula (I):

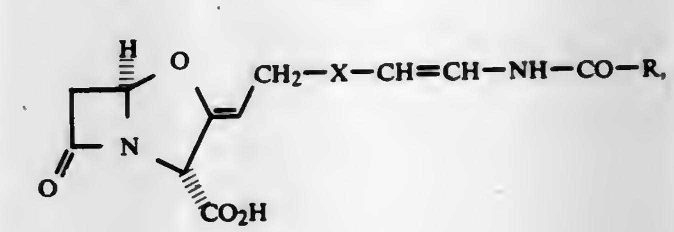

(I)

a pharmaceutically acceptable salt thereof,
the p-nitrobenzyl ester thereof or an ester thereof of the formula

$$—CO—O—CHR_1—O—CO—R_2 \qquad (a)$$

wherein R_1 is hydrogen, methyl or phenyl; R_2 is alkyl of 1 to 6 carbon atoms, phenyl, alkyl of 1 to 3 carbon atoms mono-substituted by phenyl, alkoxy of 1 to 6 carbon atoms, phenoxl or alkoxyl of 1 to 3 carbon atoms mono-substituted by phenyl; or R_1 and R_2 together with the —CH—O—CO— form a phthalidyl or 3,4-dimethoxyphthalidyl moiety,
wherein R is hydrogen or alkyl of 1 to 6 carbon atoms, and X is a sulphur atom, SO or SO_2.

7. A method of treating bacterial infections in mammals which comprises administering to a mammal in need thereof an antibacterially effective amount of a compound of the formula (I)

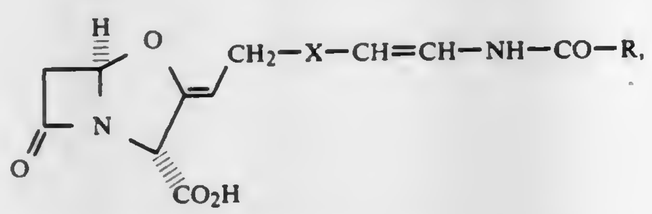
(I)

a pharmaceutically acceptable salt thereof,
the p-nitrobenzyl ester thereof or an ester thereof of the formula

$$—CO—O—CHR_1—O—CO—R_2 \qquad (a)$$

wherein R_1 is hydrogen, methyl or phenyl; R_2 is alkyl of 1 to 6 carbon atoms, phenyl, alkyl of 1 to 3 carbon atoms mono-substituted by phenyl, alkoxy of 1 to 6 carbon atoms, phenoxl or alkoxyl of 1 to 3 carbon atoms mono-substituted by phenyl; or R_1 and R_2 together with the —CH—O—CO— form a phthalidyl or 3, 4-dimethoxyphthalidyl moiety,
wherein R is hydrogen or alkyl of 1 to 6 carbon atoms and X is a sulphur atom, SO or SO_2; in combination with a pharmaceutically acceptable carrier.

4,372,963
OXAZOLYL, ISOXAZOLYL, TRIAZOLYL AND THIADIAZOLYL ALKYL BISAMIDINES

Graham J. Durant, Welwyn Garden, and Peter D. Miles, Hitchin, both of England, assignors to Smith Kline & French Laboratories Limited, Welwyn Garden, England

Division of Ser. No. 93,336, Nov. 13, 1979, Pat. No. 4,285,952, which is a division of Ser. No. 902,145, May 2, 1978, Pat. No. 4,212,875. This application Mar. 27, 1981, Ser. No. 248,386
Claims priority, application United Kingdom, May 5, 1977, 18881/77
Int. Cl.³ A61K *31/41, 31/42;* **C07D** *249/08, 261/08, 263/32, 285/10, 285/12*
U.S. Cl. 424—272 **11 Claims**

1. A compound of the structure

$$Het—(CH_2)_mZ(CH_2)_nNH\overset{X^1}{\overset{\|}{C}}NH(CH_2)_qNH\overset{X^2}{\overset{\|}{C}}NHR$$

in which
Het is a 5-membered fully unsaturated heterocycle containing at least one nitrogen atom, said heterocycle being oxazole, isoxazole, 1,2,4-triazole or 1,2,5-thiadiazole, and optionally substituted by lower alkyl, trifluoromethyl, hydroxymethyl, halogen or lower alkoxy, or 1,3,4-thiadiazole optionally substituted by lower alkyl, trifluoromethyl, hydroxymethyl, halogen, lower alkoxy or amino, said heterocycle being attached at a ring carbon;
Z is sulphur or methylene;
m is 0, 1 or 2, n is 2 or 3, and m+n is 3 or 4;
R is hydrogen or lower alkyl;
each of X^1 and X^2 is sulphur, a nitromethylene group $CHNO_2$, or an imino group NY, where Y is hydrogen, hydroxy, lower alkyl, cyano or carbamoyl $CONH_2$; and
q is from 2 to 12; in the form of the free base or its pharmaceutically-acceptable acid addition salts.

11. A method of blocking histamine H_2-receptors which comprises administering to an animal in need thereof an effective amount to block said receptors a compound of claim 1.

4,372,964
ANTIINFLAMMATORY 4,5-DIARYL-1H-IMIDAZOLE-2-METHANOLS

Joel G. Whitney, Kennett Square, Pa., assignor to E. I. Du Pont de Nemours and Company, Wilmington, Del.

Continuation-in-part of Ser. No. 199,731, Oct. 30, 1980, abandoned, which is a continuation-in-part of Ser. No. 181,991, Aug. 28, 1980, abandoned, which is a continuation-in-part of Ser. No. 109,923, Jan. 7, 1980, abandoned. This application Aug. 20, 1981, Ser. No. 294,747
Int. Cl.³ A61K *31/415;* **C07D** *233/64*
U.S. Cl. 424—273 R **36 Claims**

1. A compound of the formula

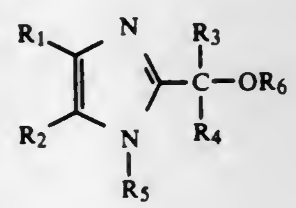

wherein
R_1 and R_2 independently are 3-pyridyl, 2-thienyl or

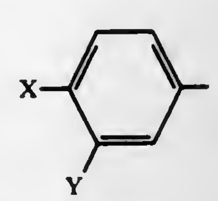

where
X is H, F, Cl, Br, C_1–C_2 alkyl, C_1–C_2 alkoxy, di(C_1–C_2 alkyl)amino or $CH_3S(O)_n$;
n=0, 1 or 2;
Y is H, F or Cl with the proviso that when Y is F or Cl, then X must be F or Cl;
R_3 and R_4 independently are H, C_1–C_3 alkyl, cyclopropyl, CF_3, CF_2H, CF_2Cl, CF_3CF_2 or $CF_3CF_2CF_2$;
with the proviso that no more than one of R_3 and R_4 can be H;
R_5=H or C_1–C_3 alkyl;
R_6=H; C_1–C_3 alkyl;

$$R_7\overset{}{\underset{\overset{\|}{O}}{C}}—;$$

or $—COOR_7$;
where
R_7 is C_1–C_2 alkyl; with the proviso that
R_5 and R_6 cannot both be C_1–C_3 alkyl; a pharmaceutically suitable acid addition salt where R_1 or R_2 is 3-pyridyl or where X is dialkylamino, or a pharmaceutically suitable metal salt thereof when at least one of R_5 and R_6 is H.

19. A method of treating inflammation in a mammal which comprises administering to the mammal an antiinflammatory amount of a compound of claim 1.

4,372,965
6-, 1- AND 2-SUBSTITUTED-THIO-1-CARBADETHIAPEN-2-EM-3-CARBOXYLIC ACID S-OXIDES

Burton G. Christensen, Scotch Plains, and David H. Shih, Manalapan, both of N.J., assignors to Merck & Co., Inc., Rahway, N.J.

Continuation-in-part of Ser. No. 84,932, Oct. 15, 1979, abandoned. This application Jan. 8, 1981, Ser. No. 223,505
Int. Cl.³ C09D *487/04;* **H61K** *31/40*
U.S. Cl. 424—274 **8 Claims**

1. A compound having the structure:

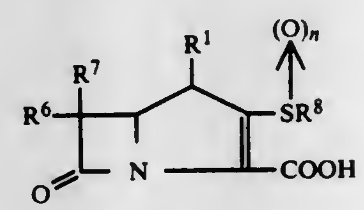

wherein: R^1, R^6, R^7 and R^8 are independently selected from the group consisting of hydrogen, (R^1 is not H) substituted and unsubstituted: alkyl, alkenyl, and alkynyl, having from 1–10 carbon atoms; cycloalkyl, cycloalkylalkyl, and alkylcycloalkyl, having 3–6 carbon atoms in the cycloalkyl ring and 1–6 carbon atoms in the alkyl moieties; phenyl; aralkyl, aralkenyl and aralkynyl wherein the aryl moiety is phenyl and the alkyl chain has 1–6 carbon atoms; wherein the substituents or substituents relative to the above-named radicals are selected from the group consisting of: amino, mono-, di-, and trialkylamino, hydroxyl, alkoxyl, sulfamoyl, amidino, guanidino, nitro, chloro, bromo, fluoro, cyano and carboxy; and wherein the alkyl moieties of the above-recited substituents have 1–6 carbon atoms; n is 1 or 2.

7. An antibiotic pharmaceutical composition comprising a therapeutically effective amount of a compound according to claim 1 and a pharmaceutical carrier therefor.

4,372,966
USE OF DIHYDRO-1H-PYRROLIZINE-3,5(2H,6H)-DIONE AS A COGNITION ACTIVATOR

Donald E. Butler, Ann Arbor, Mich., assignor to Warner-Lambert Company, Morris Plains, N.J.

Continuation of Ser. No. 186,945, Sep. 15, 1980. This application Aug. 7, 1981, Ser. No. 290,114
Int. Cl.³ A61K *31/40*
U.S. Cl. 424—274 **15 Claims**

10. A method of treating senility, of enhancing memory or of reversing amnesia caused by electroconvulsive shock in humans which comprises administering to said human an effective amount of dihydro-1H-pyrrolizine-3,5(2H,6H)-dione.

4,372,967
3H-DIHYDROFURANONE-2 DERIVATIVES AND PHARMACEUTICAL USE THEREOF

Michel Langlois, Buc; Alain P. Lacour, La Varenne; Bernard P. Bucher, Marnes la Coquette, and Gisele C. Mocquet, Paris, all of France, assignors to Delalande S.A., Courbevoie, France

Division of Ser. No. 144,075, Apr. 28, 1980, Pat. No. 4,346,102. This application Feb. 26, 1982, Ser. No. 352,911
Claims priority, application France, May 7, 1979, 79 11453; Apr. 4, 1980, 80 07659
Int. Cl.³ A61K *31/365;* **C07D** *307/32, 307/20*
U.S. Cl. 424—279 **9 Claims**

1. Compound having the formula

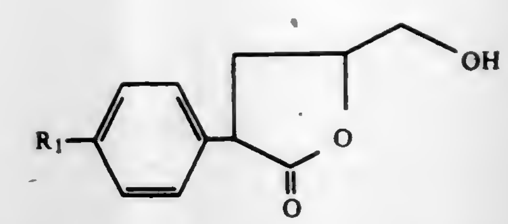

in which R_1 is selected from the group consisting of 3-methylbutoxy, cyclohexylmethoxy, metanitrobenzyloxy, metacyanobenzyloxy and 3-cyano-5-nitrobenzyloxy, mixtures of four diastereoisomers thereof, mixtures of two trans diastereoisomers thereof and mixtures of two cis diastereoisomers thereof.

4,372,968
GRANULES OF SODIUM ASCORBATE AND THE PRODUCTION THEREOF

Nobuyuki Kitamori, Suita; Keizi Hemmi, Osaka, and Masaya Maeno, Suita, all of Japan, assignors to Takeda Chemical Industries, Ltd., Osaka, Japan

Filed Oct. 29, 1980, Ser. No. 201,965
Int. Cl.³ A61K *31/365*
U.S. Cl. 424—280 **22 Claims**

1. Sodium L-ascorbate granules consisting substantially of sodium L-ascorbate and a binder, wherein the content of sodium L-ascorbate is from about 98.5 to 99.5 weight percent, on dry basis, of the granule and not less than about 80 weight percent of the granule having a particle size of 177 to 840μ which are produced by spraying sodium L-ascorbate powder having a particle size of not more than 250μ and not less than about 80 weight percent of said powder having a particle size of not more than 149μ, while allowing it to fluidize in a fluidized-bed granulator, with a solution containing a binder in an amount corresponding to about 0.5 to 1.5 weight percent of the total weight of finished product on a dry basis, and while maintaining the water content of the composition during the granulating process below about 7 weight percent throughout the entire process.

4,372,969
ADDITION SALTS OF SUBSTITUTED ARALKYLAMINES, THEIR METHOD OF PREPARATION AND THEIR USE AS PHARMACEUTICALS

Louis Lafon, Paris, France, assignor to Societe Anonyme Dite: Laboratoire L. Lafon, Maisons-Alfort, France

Continuation of Ser. No. 121,503, Feb. 14, 1980, abandoned, which is a continuation of Ser. No. 967,897, Dec. 11, 1978, abandoned. This application Feb. 19, 1981, Ser. No. 235,937
Claims priority, application United Kingdom, Dec. 13, 1977, 51836/77
Int. Cl.³ A61K *31/36;* **C07D** *317/44;* **C07C** *91/06;* **A61K** *31/135*
U.S. Cl. 424—282 **7 Claims**

1. An acid addition salt of substituted aralkylamine, for use in particular in therapy as antidepressant of the central nervous system, selected from the group consisting of
2-isopropylamino-1-phenyl-1-ethanol methanesulphonate,
2-tertiobutylamino-1-phenyl-1-ethanol hemifumarate,
2-tertiobutylamino-1-phenyl-1-ethanol methanesulphonate,
N-isopropyl-piperonylamine methanesulphonate, and
N-isopropyl-piperonylamine propionate.

7. A pharmaceutical composition for alleviating depression of the central nervous system comprising an antidepressant effective amount of a component of claim 1.

4,372,970

BENZOFURAN ACETIC ACID ESTERS AND THEIR ARTHROPOCIDAL COMPOSITIONS

Malcolm R. Hadler, Tarporley; David R. Woodward, Runcorn, and Andrew A. Godfrey, Acton Bridge, all of England, assignors to Shell Internationale Research Maatschappij B.V., Netherlands

PCT No. PCT/GB80/00198, § 371 Date Jul. 9, 1981, § 102(e) Date Jul. 9, 1981, PCT Pub. No. WO81/01408, PCT Pub. Date May 28, 1981

PCT Filed Nov. 14, 1980, Ser. No. 285,183

Claims priority, application United Kingdom, Nov. 15, 1979, 7939600

Int. Cl.[3] C07D *307/78;* A01N *43/08*

U.S. Cl. 424—282 **7 Claims**

1. A compound of the formula (I)

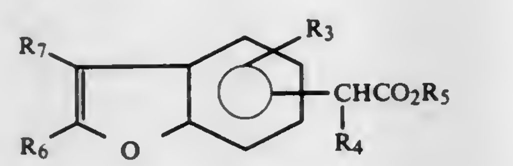

wherein R_6 and R_7 are each independently a hydrogen, or halogen atom, or a C_1 to C_4 alkyl, aralkyl, aryl, C_1 to C_4 alkoxy, or C_2 to C_4 alkenyl or trifluoromethyl group, or R_6 and R_7 may be together a methylenedioxy;

R_3 is a hydrogen, or halogen atom, or a C_1 to C_4 alkyl or C_1 to C_4 alkoxy group;

R_4 is a C_1 to C_4 alkyl, C_2 to C_4 alkenyl, C_2 to C_4 alkynyl, C_1 to C_4 alkoxy, cyano, halogen-substituted C_1 to C_4 alkyl, halogen-substituted C_2 to C_4 alkenyl group, or a C_3 to C_5 alicylic group; and

R_5 is a group of one of the following structural formulae:

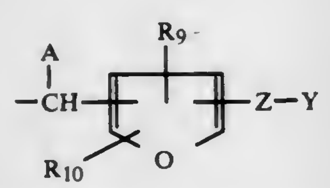

where A is a hydrogen atom, or a cyano group, or a —C≡CH group, or a

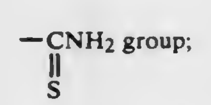

R_9 and R_{10} are each independently a hydrogen atom, or a C_1 to C_4 alkyl or C_2 to C_4 alkenyl group;

Z is an oxygen or a sulphur atom, or a $—CH_2—$ or —CO— group; and

Y is a hydrogen atom, or a C_1 to C_4 alkyl, C_2 to C_4 alkenyl, C_2 to C_4 alkynyl or an aryl or furyl group which is either unsubstituted, or is substituted by one or more C_1 to C_4 alkyl, C_2 to C_4 alkenyl or C_1 to C_4 alkoxy groups or halogen atoms;

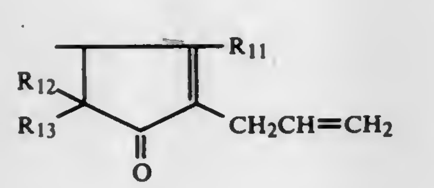

where:

R_{11} is a hydrogen atom, or a methyl group, and

R_{12} and R_{13} are each independently a hydrogen atom, or a C_1 to C_4 alkyl group;

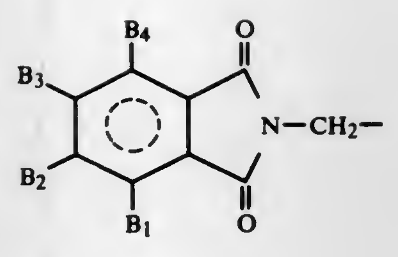

where:

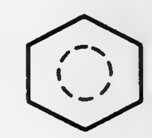

is a benzene ring, or a dihydro- or tetrahydro-benzene ring; and

B_1, B_2, B_3, B_4 are each independently a hydrogen, or halogen atom, or a methyl group;

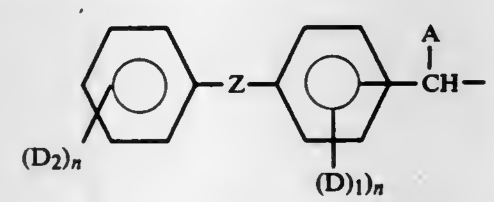

where: D_1 and D_2 are each independently a halogen atom or a methyl group;

each n is independently 0, 1 or 2; and A and Z are as defined above;

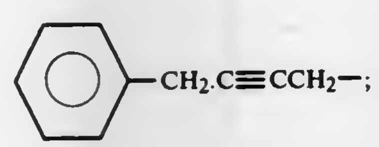

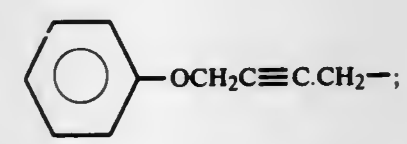

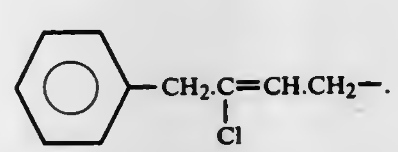

3. A composition comprising a compound as claimed in claim 1 in an arthropocidally effective amount or concentration in combination with a carrier or diluent.

4,372,971

HETEROCYCLIC PROSTAGLANDIN TYPE COMPOUNDS, MEDICAMENTS CONTAINING THEM AND PROCESSES FOR THE PREPARATION AND USE OF THESE HETEROCYCLIC COMPOUNDS AND MEDICAMENTS

Ulrich Seipp, Aachen; Werner Vollenberg, Stolberg; Bernd Mueller, and Gudrun Michel, both of Aachen, all of Fed. Rep. of Germany, assignors to Gruenenthal GmbH, Stolberg, Fed. Rep. of Germany

Filed Aug. 6, 1981, Ser. No. 290,573

Claims priority, application Fed. Rep. of Germany, Aug. 8, 1980, 3029984

Int. Cl.[3] A61K *31/557;* C07D *307/935;* A61K *31/34*

U.S. Cl. 424—285 **42 Claims**

1. A heterocyclic compound of the formula

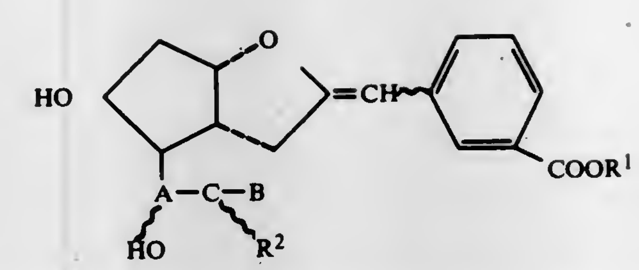

(I)

in which the phenyl radical with respect to the double bond has the E-, the EZ- or the Z-configuration and in which at the carbon atom 15 which carries the group R^2 there exists the RS- or S-configuration, wherein

R^1 represents hydrogen, an alkyl group containing 1 to 6 carbon atoms or a pharmaceutically acceptable cation,

R^2 represents hydrogen or a methyl group,

A represents $—CH_2—CH_2—$,(trans)—CH=CH— or —C≡C—, and

B represents an alkyl group containing 5 to 9 carbon atoms and having the structure

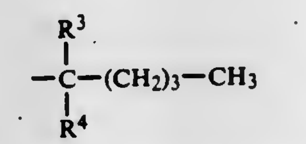

wherein R^3 and R^4 have the same or a different meaning and each represents hydrogen, methyl or ethyl, or B represents cyclohexyl or cyclohexyl substituted in position 4′ by a methyl or an ethyl group.

42. A method for simultaneously inhibiting blood platelet aggregation and lowering blood pressure, comprising the step of administering to a human patient an amount of a compound as defined by claim 1, which is sufficient to simultaneously inhibit blood platelet aggregation and lower the blood pressure.

4,372,972

N-SUBSTITUTED ALKYNYL ANILINES

Hak-Foon Chan, Doylestown, Pa., assignor to Rohm and Haas Company, Philadelphia, Pa.

Filed Sep. 14, 1979, Ser. No. 75,563

Int. Cl.[3] A01N *37/22;* C07C *103/737*

U.S. Cl. 424—304 **8 Claims**

1. A compound according to the formula

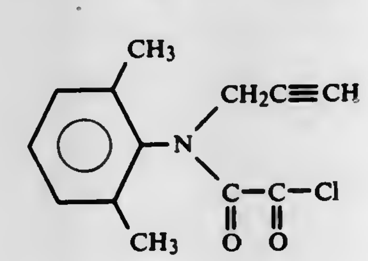

2. A compound having the formula

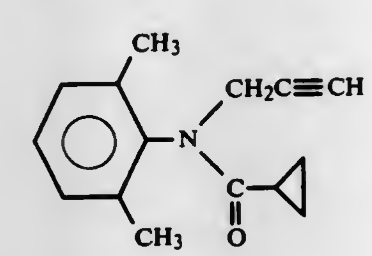

5. A method for controlling phytopathogenic fungi in agronomic crops which comprises applying to the plant, the plant seed, or the plant habitat, a fungicidally effective amount of a compound of the formula

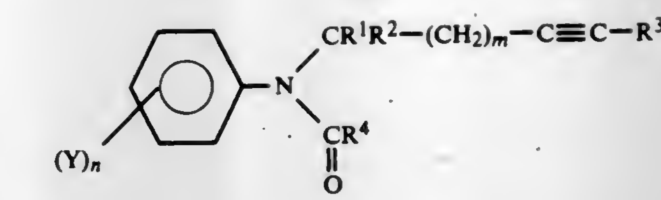

wherein R^1, R^2 and R^3 are independently hydrogen, $(C_1–C_4)$ alkyl, $(C_2–C_4)$alkenyl, $(C_2–C_4)$alkynyl, $(C_3–C_8)$cycloalkyl, $(C_5–C_8)$cycloalkenyl, halogen, cyano, carbo$(C_1–C_{1}$.0)alkoxy, or aryl or aryl$(C_1–C_4)$alkyl the aryl portion of which is optionally substituted;

R^4 is $(C_3–C_8)$ cycloalkyl, $(C_5–C_8)$cycloalkenyl, mono or di$(C_1–C_6)$alkylamino$(C_1–C_4)$alkyl, mono or di$(C_2–C_6)$alkenylamino$(C_1–C_4)$alkyl, mono or di$(C_2–C_6)$alkynylamino$(C_1–C_4)$alkyl, or halocarbonyl;

Y is halogen, $(C_1–C_4)$alkyl, $(C_1–C_4)$alkoxy, nitro, mono or di$(C_1–C_4)$alkylamino, trihalomethyl, cyano, phenyl, phenoxy, phenylthio, phenylsulfinyl, or phenylsulfonyl, the aryl portion of which is optionally substituted; and

m and n are independently zero or an integer from 1 to 3.

4,372,973

16-AMINO-POSTAGLANDIN DERIVATIVES, THEIR ACID ADDITION SALTS, AND A PROCESS FOR THE PREPARATION THEREOF

Gabor Ambrus; Eva Toth-Sarudy; György Cseh; Istvan Barta, and Gyula Horvath, all of Budapest, Hungary, assignors to Gyogyszerkutato Intezet, Budapest, Hungary

Continuation-in-part of Ser. No. 265,433, May 20, 1981, abandoned. This application Dec. 21, 1981, Ser. No. 332,840

Int. Cl.[3] A61K *31/557;* C07C *177/00*

U.S. Cl. 424—305 **7 Claims**

1. 16-Amino-prostaglandin derivatives of general formula I

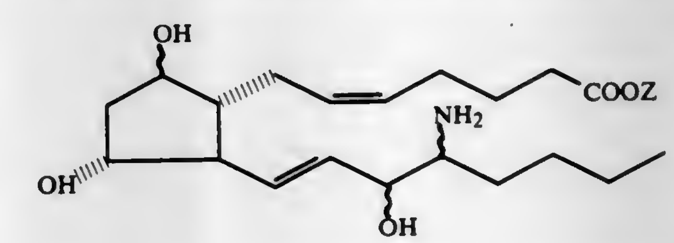

wherein C-15 and C-16 may have either S or R configuration, Z stands for a hydrogen atom or a lower alkyl group, and their acid addition salts.

4,372,974

ANTICONVULSIVE COMPOSITIONS AND METHOD OF TREATING CONVULSIVE DISORDERS

Irving Fish, Tenafly, N.J.; Stephen A. Schwartz, Bronx, and Stanley Samuels, White Plains, both of N.Y., assignors to New York University, New York, N.Y.

Continuation-in-part of Ser. No. 162,907, Jun. 25, 1980, Pat. No. 4,322,440. This application Jun. 2, 1981, Ser. No. 269,629

The portion of the term of this patent subsequent to Mar. 30, 1999, has been disclaimed.

Int. Cl.[3] A61K *31/195*

U.S. Cl. 424—319 **38 Claims**

1. A method for controlling seizures in a mammal in need of such treatment which comprises administering to said mammal prior to the onset of a seizure a composition comprising a solid oral dosage form, said oral dosage form containing a pharmaceutical formulation comprising an effective amount for controlling seizures of a member selected from the group consisting of compounds having the general formula

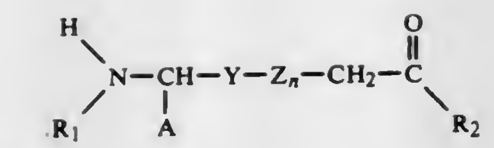

wherein
R_1 is H,

$CH_3C(=O)—$, $CH_3CH_2C(=O)—$ or $CH_3CH_2CH_2C(=O)—$

A is H, CH_3, $CH_3CH_2—$, HO-CH_2, HO-CH_2CH_2, $CH_3OCH_2—HS—CH_2—$, HS—$CH_2CH_2—$, $CH_3SCH_2—$,
Y is C=O, HC—OH or, CH—A,
Z is CH—A, O, S; and
R_2 is —OH,
n is 1, and Y is CH—A when n=0; and
A+Y+Z include no more than one Oxygen or Sulfur atom and acid addition salts of such compounds,
said formulation having a pH between about 1.8 and 6.0.

4,372,975
SUBSTITUTED 2-BENZOYL-4-CHLOROGLYCINANILIDE DERIVATIVES, A PROCESS FOR THEIR PRODUCTION, AND THEIR USE AS MEDICAMENTS
Gilbert Mouzin; Henri Cousse; Antoine Stenger, all of Castres, France, and Sylvano Casadio, Milan, Italy, assignors to Pierre Fabre SA, Paris, France
Continuation-in-part of Ser. No. 916,651, Jun. 19, 1978, abandoned. This application Oct. 27, 1980, Ser. No. 200,622
Claims priority, application France, Jun. 16, 1977, 77 18511
Int. Cl.³ A61K *31/165;* **C07C** *103/133*
U.S. Cl. 424—324 **17 Claims**

1. A compound of the formula

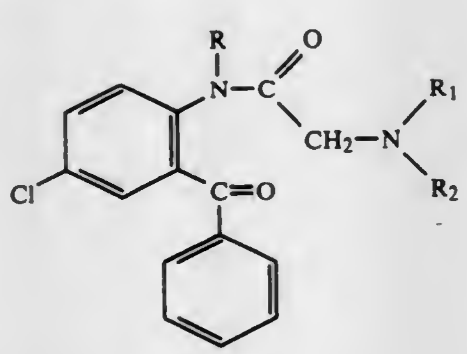

wherein R is methyl,
wherein R_1 is hydrogen, and
wherein R_2 is selected from the group consisting of allyl, diethylpropargyl, ethynylcyclohexyl, cyclopropyl and methylallyl,
or a therapeutically acceptable acid addition salt thereof.

4,372,976
NOVEL ARYL-ALIPHATIC KETONE AND ITS USE AS AN ANTIVIRAL AGENT
Guy D. Diana, Stephentown, N.Y., assignor to Sterling Drug Inc., New York, N.Y.
Filed Aug. 7, 1981, Ser. No. 291,015
Int. Cl.³ A61K *31/12;* **C07C** *49/252*
U.S. Cl. 424—331 **3 Claims**

1. tert-Butyl (3,4-dibenzyloxy)styryl ketone.
3. A process for combatting viruses which comprises contacting the locus of said viruses with an antivirally effective amount of tert-butyl (3,4-dibenzyloxy)styryl ketone.

4,372,977
POLYOXETHYLENE DERIVATIVES AS ANTIPRURITIC ECTOPARASITICIDE
Myron J. Lover, Mountainside; Arnold J. Singer, South Orange; Donald M. Lynch, Waldwick, and William E. Rhodes, III, Cranford, all of N.J., assignors to Block Drug Company, Inc., Jersey City, N.J.
Continuation of Ser. No. 802,012, May 31, 1977, abandoned. This application Jan. 17, 1979, Ser. No. 4,229
Int. Cl.³ A01N *31/02, 31/14, 37/02, 37/06*
U.S. Cl. 424—342 **8 Claims**

1. A method of controlling ectoparasites or their ova which comprises applying to a human or animal host in need of such control, an effective toxic amount of at least one derivative of polyoxyethylene having an HLB of about 2.5-13.5, said derivative being an alkyl ether thereof having 12-24 carbon atoms in the alkyl moiety.

4,372,978
ANTIBACTERIAL AGENT AND METHOD
John R. Gilbertson, Pittsburgh, and Richard J. Crout, Monroeville, both of Pa., assignors to University of Pittsburgh, Pittsburgh, Pa.
Division of Ser. No. 97,405, Nov. 26, 1979, which is a division of Ser. No. 6,347, Jan. 25, 1979, Pat. No. 4,209,533. This application Aug. 7, 1981, Ser. No. 291,026
Int. Cl.³ A61K *31/045, 7/16*
U.S. Cl. 424—343 **3 Claims**

1. A method of inhibiting growth of bacteria comprising exposing said bacteria to an effective concentration of a polyunsaturated long-chain alcohol selected from the group consisting of linolenyl alcohol and linoleyl alcohol,
selecting said bacteria from the group consisting of *Clostridium butyricum, Clostridium perfringens, Streptococcus mutans, Streptococcus mutans BHT and* Steptococcus sanguis, and
providing said alcohol in a food product.

4,372,979
REDUCTION OF CURD FINES IN CHEESE MANUFACTURE
George W. Reinbold, Wheat Ridge, and Malireddy S. Reddy, Thornton, both of Colo., assignors to Leprino Foods Company, Denver, Colo.
Continuation-in-part of Ser. No. 73,330, Sep. 7, 1979, abandoned. This application Feb. 23, 1981, Ser. No. 236,717
Int. Cl.³ A23C *19/02, 21/02;* **C12N** *1/20*
U.S. Cl. 426—36 **18 Claims**

1. The method of making cheese by using a starter culture medium which results in a curd-whey mixture substantially free from culture medium produced curd fines, said method comprising:
(a) forming an aqueous culture medium from protein-providing medium solids selected from the class consisting of (i) mixtures of whey solids and precipitated casein in the form of a water-dispersible casein salt or (ii) mixtures of whey solids and milk solids, or (iii) mixtures of whey solids, milk solids, and precipitated casein in the form of a water-dispersible casein salt, said whey solids consisting essentially of whey protein concentrate made from whey by ultrafiltration, said medium solids providing a weight ratio within the range from 0.4 to 5.0 parts of casein (casein basis) per part of total whey protein provided by said whey solids and said milk solids, the whey protein provided by said whey solids comprising at least 10% by weight of said medium solids;
(b) heating said culture medium at a pH of from 5.6 to 6.9 to a temperature of about 160° to about 195° F. for about 20 to about 90 minutes to cause the complexing of casein and whey protein without precipitating whey protein or coagulating the medium, said medium on completion of said heating being coagulable without containing added calcium or phosphate ions by addition of rennet at the rate of 3 ounces per 1000 pounds of medium with the medium at pH 6.2 and 92° F.;
(c) culturing harmless lactic acid-producing bacteria in the completed medium from step (b) to produce a bulk starter culture without coagulating said medium; and, thereafter,
(d) using said bulk starter culture as a bacterial inoculant for milk in the manufacture of cheese by adding said bulk starter culture to cheese milk and coagulating the milk with rennet, whereby complexed whey protein and casein of the bulk starter culture coagulates with the milk protein to produce a curd-whey mixture which is substantially free of curd fines from the starter medium.

4,372,980
METHOD OF OPERATING A PRESSURE FRYER
Clement J. Luebke, Beloit, Wis.; John A. Mitchell, and Lowell W. Daniels, both of Rockford, Ill., assignors to Alco Standard Corporation, Valley Forge, Pa.
Division of Ser. No. 68,108, Aug. 20, 1979, Pat. No. 4,296,310. This application Jun. 3, 1981, Ser. No. 269,550
Int. Cl.³ G01N *33/02, 33/28*
U.S. Cl. 426—231 **1 Claim**

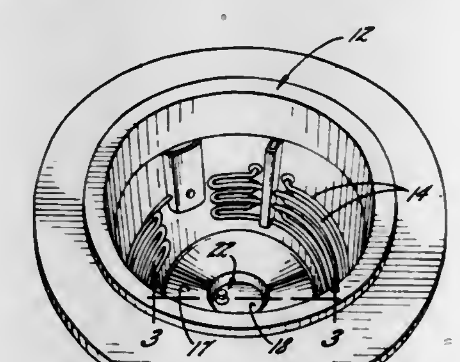

1. A method of operating a pressure fryer having a vessel holding a food product and a bath of cooking oil, means for heating said bath, a removable cover for establishing a pressure-tight condition in said vessel when said bath is heated means in the lower portion of said vessel for detecting the presence of water in the lower portion of said vessel and for producing an electrical signal when more than a predetermined quantity of water is present in said vessel, and means in said circuit for automatically disabling said heating means when said signal is produced, said method comprising the steps of, manually actuating a main control to activate said heating means, detecting the presence of water in the lower portion of said bath, producing a signal when the concentration of water in the lower portion of said bath exceeds a predetermined threshold, and utilizing said signal to de-activate said heating means independently of said main control and independently of any manual operation thereby to prevent operation of the heating means when the concentration of water in the lower portion of said bath is in excess of said predetermined threshold, whereby said concentration of water is prevented from flashing into steam which causes the hot cooking oil to gush rapidly out of the top of the vessel when the cover is removed.

4,372,981
METHOD OF SMOKING FOOD PRODUCTS
Leon D. Lieberman, 5269-3 Newcastle St., Encino, Calif. 91316
Filed Aug. 31, 1978, Ser. No. 938,406
Int. Cl.³ A23B *4/04*
U.S. Cl. 426—235 **6 Claims**

1. A method of smoking food products which comprises the steps of:
(a) placing a food product to be smoked in an enclosed space;
(b) electrically coupling said food product to a first terminal of a voltage source;
(c) locating the second terminal of said voltage source within said space whereby an electric field will be created within said space;
(d) introducing smoke into said space;
(e) applying a first voltage between said terminals, said second terminal being negative and said first terminal

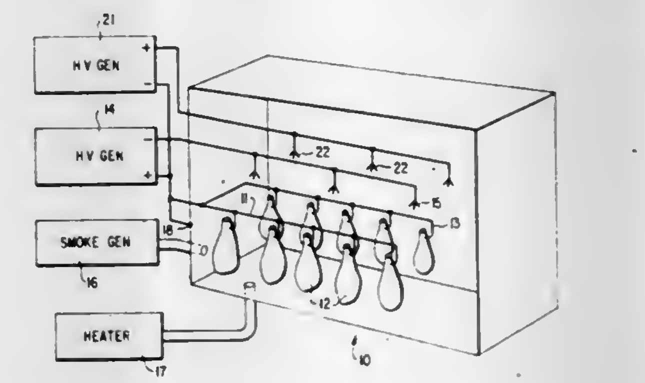

being positive, and maintaining said first voltage until substantially all of said smoke has been deposited;
(f) removing said first voltage and applying a second voltage between said terminals, said second terminal being positive and said first terminal being negative, and maintaining said second voltage for a period of time whereby the charge generated by said first voltage will be neutralized; and
(g) reapplying said first voltage between said terminals.

4,372,982
REFRIGERATED SHELF STABLE DOUGH
Michael J. Haasl, Minneapolis; Kenneth D. Snider, Le Sueur, and William L. Murphy, Golden Valley, all of Minn., assignors to The Pillsbury Company, Minneapolis, Minn.
Continuation of Ser. No. 117,312, Jan. 31, 1980, abandoned. This application Jun. 18, 1981, Ser. No. 275,008
Int. Cl.³ A21D *6/00, 10/02*
U.S. Cl. 426—549 **9 Claims**

1. A method of processing dough to improve baked flakiness, said method comprising:
mixing flour, shortening and water and thereby form a dough mass, said shortening being in an amount sufficient to provide flakiness in a cooked product made from said dough mass;
exposing said dough mass to a reduced pressure environment wherein the vacuum pressure is at least about 27.5 inches of mercury, said exposure is for a time of at least about ½ second with said time being that time period for which the vacuum pressure is at least equal to the specified vacuum pressure, during said exposing, said dough is allowed to volumetrically expand at least about 1.1 times its pre-exposure volume; and
releasing said vacuum prior to commencement of cooking.

4,372,983
METHOD OF MAKING CHEESE
Gretz L. Hazen, Fort Atkinson, Wis., assignor to Dec International, Inc., Madison, Wis.
Division of Ser. No. 159,235, Jun. 13, 1980, Pat. No. 4,308,791, which is a continuation of Ser. No. 20,803, Mar. 15, 1979, abandoned. This application Aug. 17, 1981, Ser. No. 293,360
Int. Cl.³ A23C *19/00*
U.S. Cl. 426—582 **3 Claims**

1. A method of cheese making, comprising the steps of positioning an agitating unit having a vertical drive shaft and reversible drive means operably connected to said shaft in a cheese finishing vat, said reversible drive means being operable to rotate said shaft in a stirring direction and an opposite un-

loading direction, mounting a stirring paddle on the agitating unit for floating vertical movement, positioning a curd engaging face of said stirring paddle in said stirring direction, mounting an unloading paddle on the agitating unit for floating vertical movement, positioning a curd engaging face of said unloading paddle in said unloading direction, introducing a quantity of cheese curd and whey into said vat, draining whey from the vat through a first outlet located in the bottom of the vat, rotating the drive means in said stirring direction to cause the

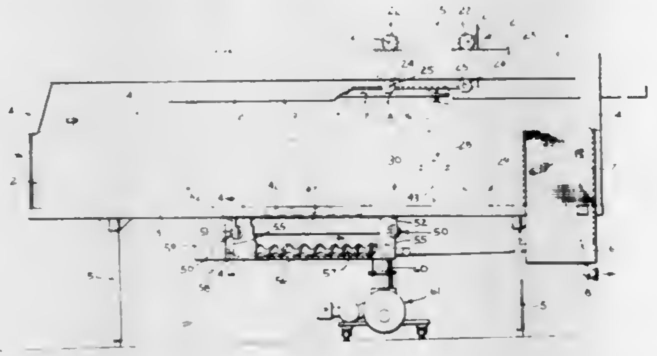

curd engaging face of said stirring paddle to lead in the direction of rotation and ride along the bottom of the vat and agitate the curd while freely trailing said unloading paddle through said curd, rotating the drive means in the unloading direction to cause the curd engaging face of the unloading paddle to lead in the direction of rotation and ride on the bottom of the vat to engage the curd and discharge the entire quantity of curd through a discharge opening, separate from said first outlet, in the bottom of the vat to the exterior while freely trailing said stirring paddle.

4,372,984

PROCESS FOR IMPROVING THE CONSISTENCY OF A RECONSTITUTED INSTANT PUREE

Heinz Bauer, Dinhard, Switzerland, assignor to Societe D'Assistance Technique Pour Produits Nestle S.A., Lausanne, Switzerland

Continuation of Ser. No. 2,853, Jan. 12, 1979, abandoned. This application May 10, 1982, Ser. No. 376,671

Claims priority, application Switzerland, Feb. 6, 1978, 1263/78

Int. Cl.[3] **A23L** *1/212*

U.S. Cl. 426—637 **11 Claims**

1. A process for treating a reconstitutable instant potato puree so as to improve its consistency upon reconstitution which consists of incorporating in the unreconstituted instant potato puree a material consisting of crude vegetable fibres in a quantity of from 1 to 5% by dry weight, based on the dry matter content of the puree.

8. A reconstitutable instant potato puree having improved consistency upon reconstitution which consists of (a) reconstitutable potato puree and (b) from 1 to 5% by dry weight of crude vegetable fibres, based on the dry matter content of the instant potato puree, added to the puree.

4,372,985

ION IMPLANTATION FOR HARD BUBBLE SUPPRESSION

Robert F. Bailey, Rossmoor, Calif., assignor to Rockwell International Corporation, El Segundo, Calif.

Filed Dec. 8, 1980, Ser. No. 213,976

Int. Cl.[3] **B05D** *3/06*

U.S. Cl. 427—38 **3 Claims**

1. A method for processing a magnetic bubble domain device comprising the steps of:

providing a non-magnetic substrate;

providing a thin layer of magnetic material capable of supporting magnetic bubble domains on a first major surface of said substrate;

directing a beam of ions consisting essentially of a non-gaseous element at said entire layer so that said ions are implanted at a depth in excess of 500 angstroms while minimizing the compressive stress in the implanted layer, and thereby minimizing the change in stress-induced anisot-

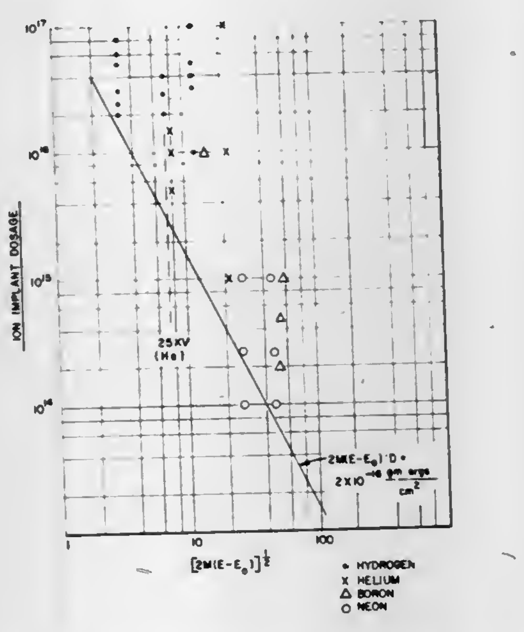

ropy of the ion-damaged implanted layer, said entire layer still being capable of supporting magnetic bubble domains while hard bubble domains are suppressed after ion implantation.

4,372,986

POLYVINYL ALCOHOL-CLAD SHAPED ARTICLE OF VINYL CHLORIDE RESIN

Kiyoshi Imada, Omiya; Susumu Ueno, Ibaraki; Yasuhide Nishina, Ibaraki, and Hirokazu Nomura, Ibaraki, all of Japan, assignors to Shin-Etsu Chemical Co. Ltd., Tokyo, Japan

Filed Jul. 1, 1980, Ser. No. 165,150

Claims priority, application Japan, Jul. 9, 1979, 54-86645

The portion of the term of this patent subsequent to Oct. 6, 1998, has been disclaimed.

Int. Cl.[3] **B05D** *3/06*

U.S. Cl. 427—40 **3 Claims**

1. A method for the preparation of a composite shaped article of a vinyl chloride-based resin clad with a coating layer of a polyvinyl alcohol provided on the surface of the shaped article without an intervening layer of an adhesive agent which comprises the steps of

(a) subjecting the surface of the shaped article of the vinyl chloride-based resin to exposure to an atmosphere of low temperature plasma of a gas having no polymerizability in plasma condition,

(b) coating the thus plasma-treated surface of the shaped article with an aqueous solution containing a polyvinyl alcohol dissolved therein, and

(c) drying the aqueous coating layer on the surface of the shaped article.

4,372,987

METHOD OF PRODUCING A MULTILAYER ANTI-REFLECTION COATING

Peter Ganner, Innsbruck, and Theodor Wallner, Volders, both of Austria, assignors to D. Swarovski & Co., Wattens, Austria

Filed Mar. 9, 1981, Ser. No. 241,732

Claims priority, application Fed. Rep. of Germany, Mar. 12, 1980, 3009533

Int. Cl.[3] **G02B** *1/10;* **B05D** *1/36*

U.S. Cl. 427—42 **6 Claims**

1. A method of producing a multilayer anti-reflection coating with an interference effect for optical purposes upon a substrate, of which at least one layer of the coating has a low refractive index, below $n=1.65$, and at least one other layer of

the coating has a medium refractive index, from $n=1.65$ to $n=1.80$, comprising producing the layer of medium refractive

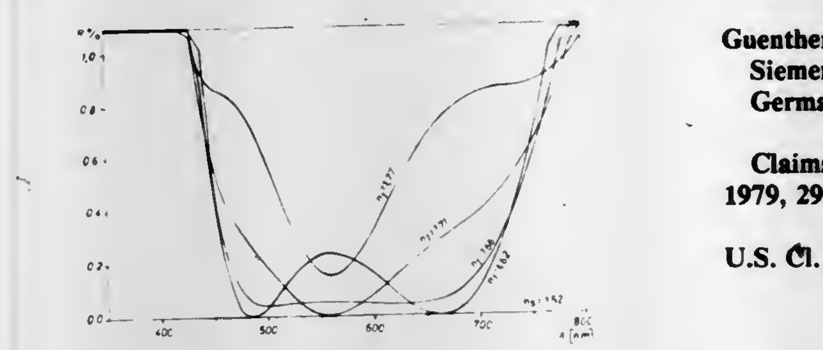

value in a vacuum in a reactive atmosphere by depositing upon said substrate a mixture of tantalic oxide and aluminum oxide which has been vaporized by means of an electron gun.

4,372,988

EXTENSION OF CABLE LIFE

George Bahder, Edison, N.J., assignor to Cable Technology Laboratories, Inc., New Brunswick, N.J.

Continuation of Ser. No. 5,321, Jan. 22, 1979, abandoned. This application Mar. 3, 1981, Ser. No. 239,220

Int. Cl.[3] **B05D** *5/00*

U.S. Cl. 427—52 **9 Claims**

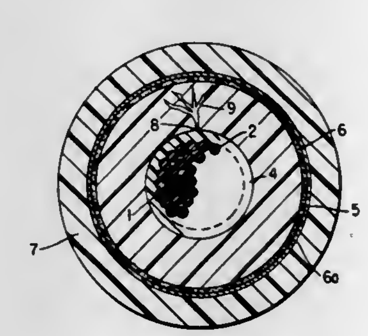

1. A method for the in situ repair of an underground high voltage electrical cable for extending the life thereof, said cable including a stranded conductor and a polyolefin insulation having at least one electrochemical tree formed therein, said method being effective to counterbalance the deleterious effect of said electrochemical trees on the electrical properties of said insulation while preventing the growth of said trees, said method comprising the steps of:

drying said cable; and

continuously introducing an electrochemical tree retardant liquid to said conductor so as to cause said liquid to diffuse along said conductor between the strands thereof and into said insulation layer so as to fill said trees;

said electrochemical tree retardant liquid being a liquid having the properties of resistivity in excess of 10^9 ohms per centimeter, a relative dielectric constant below 20, and sufficiently low molecular weight to permit ready penetration into polyolefin insulation, said molecular weight being sufficiently high to prevent rapid diffusion out of said insulation entirely.

2. The method of claim 1 wherein said drying step comprises heating the cable by passing an electrical current through the conductor of said cable.

4,372,989

PROCESS FOR PRODUCING COARSE-GRAIN CRYSTALLINE/MONO-CRYSTALLINE METAL AND ALLOY FILMS

Guenther Menzel, Munich, Fed. Rep. of Germany, assignor to Siemens Aktiengesellschaft, Berlin & Munich, Fed. Rep. of Germany

Filed Jun. 9, 1980, Ser. No. 157,826

Claims priority, application Fed. Rep. of Germany, Jun. 20, 1979, 2924920

Int. Cl.[3] **B05D** *3/06*

U.S. Cl. 427—53.1 **8 Claims**

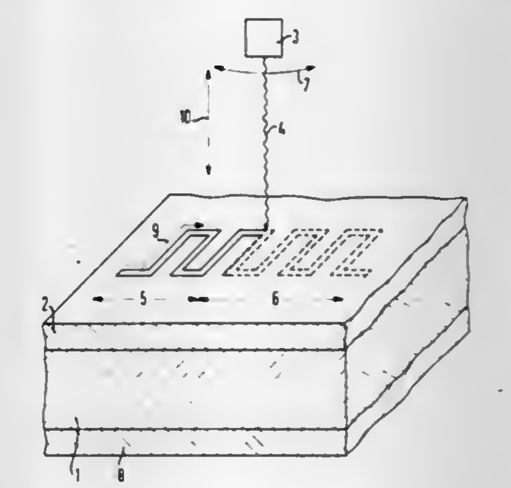

1. In a method of producing specifically shaped coarse-grained crystalline or monocrystalline surfaces or lines in metal or alloy films on substrates composed of a material selected from the group consisting of ceramic, glass and silicon through the conversion of an amorphous film deposited at a temperature ranging from about room temperature to about −160° C. on a surface of such substrate, the improvement comprising:

controllably guiding a focused energy beam over select areas of said amorphous metallic layer; and

substantially simultaneous maintaining said substrate and said deposited metallic layer at a relatively low temperature approximately equal to said deposition temperature of said metallic layer onto said substrate whereby crystallization seeds are locally and directly formed at the beam-irradiated areas and function as a starting point for a monocrystalline front which is guided into a desired direction to form specifically-shaped crystalline or monocrystalline surfaces or lines in the amorphous metallic films.

4,372,990

RETAINING WALL TECHNIQUE TO MAINTAIN PHYSICAL SHAPE OF MATERIAL DURING TRANSIENT RADIATION ANNEALING

Hon W. Lam, Dallas, Tex., assignor to Texas Instruments Incorporated, Dallas, Tex.

Filed Jun. 23, 1980, Ser. No. 161,712

Int. Cl.[3] **B05D** *3/06*

U.S. Cl. 427—53.1 **8 Claims**

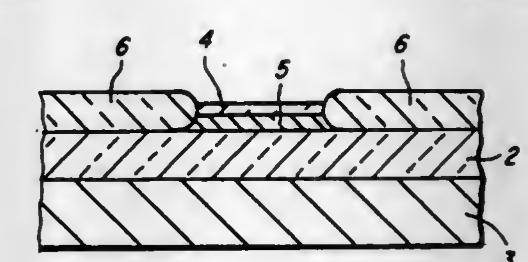

1. A method for preparing small islands of semiconductor material for device fabrication, comprising the steps of:

depositing a layer of polysilicon on a first insulating layer which is on a substrate;
masking areas of said polysilicon layer, to become islands, with a second insulating material;
subjecting the exposed surface of said polysilicon layer to an oxidation process;
removing said second insulator material from the upper surface of said silicon islands; and
subjecting said silicon islands to transient radiation annealing.

4,372,991

COMBINATION SCRATCH FILLER AND PRIMER IN AEROSOL FORM

Stanley E. Kendall, Wilmette, Ill., assignor to American Home Products Corporation, New York, N.Y.

Filed Aug. 10, 1981, Ser. No. 291,657

Int. Cl.^{3} C08L *1/08, 1/18;* **B32B** *35/00*

U.S. Cl. 427—140 **3 Claims**

1. A combination scratch filler and primer concentrated composition for dispensing in an aerosol dispensing system consisting essentially of:

	Percent By Weight
½ Sec. RSNC 20%	25.96
Coconut Oil Alkyd	17.10
Butyl Benzyl Phthalate	2.10
Cellosolve Acetate	3.89
Methyl Ethyl Ketone	12.67
Nitropropane	1.61
Organic Calcium Bentonite	0.78
Soya Lecithin	1.55
Zinc Stearate	0.78
Titanium Dioxide	9.72
Calcium Carbonate	9.72
Magnesium Silicate	9.72
Malic Acid	2.46
Lampblack Paste-NC	1.94
	100.00

4,372,992

POLYMER COATED CHAIN LINK FENCING

Clyde A. Long, Hyattsville, Md., assignor to Sonco Wholesale Fence Inc., Bladensburg, Md.

Division of Ser. No. 123,936, Feb. 25, 1980, Pat. No. 4,305,343. This application Jul. 8, 1981, Ser. No. 281,316

Int. Cl.^{3} B05D *1/22*

U.S. Cl. 427—185 **1 Claim**

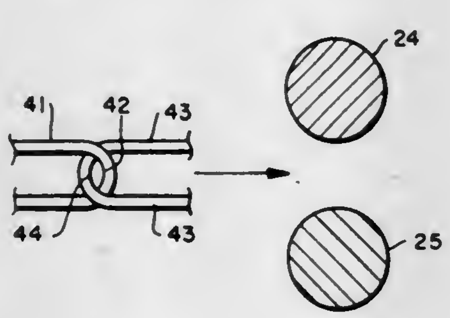

1. The method of applying a polymer coating to chain link fencing which comprises heating the chain link fencing, feeding the chain link fence into a fluidized bed dryer between sets of rollers where heated particles of the polymer adhere to the surface of the chain link fencing, the improvement comprising controlling the rate of feed of the chain link fencing to compress it, and separating the links going into said rollers whereby the polymer powder coats the portions of said links which are normally in contact.

4,372,993

METHOD FOR MAKING ENAMEL BEADS AND RESULTING PRODUCT

Michael J. Seidel, 242 NE. 169th, Portland, Oreg. 97230, and Kevin L. Dixon, Rte. 2, Box 1164K, Rosebury, Oreg. 97470

Filed Dec. 23, 1980, Ser. No. 219,525

Int. Cl.^{3} B05D *3/02, 3/08*

U.S. Cl. 427—193 **9 Claims**

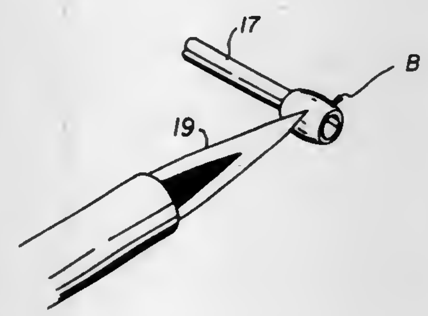

1. A method of making enamel beads comprising the steps of,
providing a tubular core member of metal,
heating said tubular core member to a glowing state,
coating the outer surface of said heated core member with an enamel flux plural times,
heating said flux coated tubular core member to a glowing state,
applying a particulate enamel material to the outer surface of said flux coated core member while in said heated state,
heating said particulate enamel material on said core member to a molten state to uniformly distribute said enamel material on said core member thereby forming a bead, and
cooling said enamel material following the formation of said bead.

4,372,994

SYNTHETIC PLASTICS COATING

Frederic D. Haig, 64 Trennerry Crescent, Abbortsford, Victoria, Australia

Filed Jan. 26, 1981, Ser. No. 228,477

Claims priority, application Australia, Jan. 24, 1980, PE2136

Int. Cl.^{3} B05D *1/24, 1/42*

U.S. Cl. 427—195 **12 Claims**

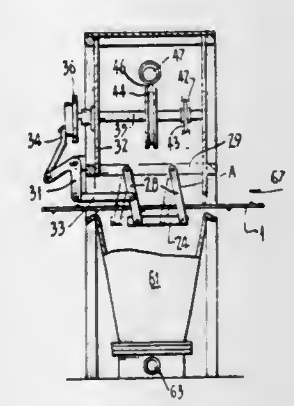

1. A method for coating a longitudinally extending member moving along a path with thermally responsive, synthetic plastics material comprising the steps of:
feeding the plastics material in particulate form onto a horizontal support to form a mound of material thereon;
pendulously swinging the support and mound formed thereon back and forth along the path of the member so that said support and mound have horizontal and vertical components of motion;
heating the longitudinally extending member; and
passing the longitudinally extending member through the pendulously swinging mound of plastics material to coat the member with the material.

4,372,995

PROCESS OF MAKING SURFACE ALLOYED PARTS

John J. Rausch, Rte. 2, Box 177, Antioch, Ill. 60002, and Ray J. Van Thyne, 1070 Valley Lake Dr., Inverness, Ill. 60067, assignors to John J. Rausch; Ray J. Van Thyne and Material Sciences Corporation, all of Mt. Prospect, Ill.

Filed Jun. 8, 1981, Ser. No. 271,128

Int. Cl.^{3} C23C *1/08, 1/10*

U.S. Cl. 427—300 **23 Claims**

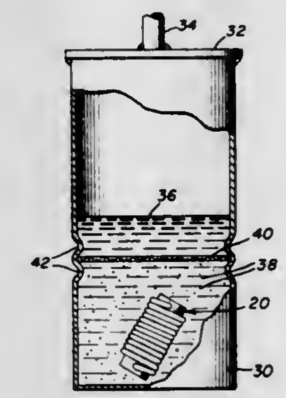

1. A process of diffusing at least one predetermined element into the surface of a ferrous-based part while minimizing bonding of the part to a member which is in contact with the part during the process, comprising constructing the member of a barrier material having a composition to substantially preclude diffusion therein of the predetermined element and being capable of withstanding a molten-lead alloy bath, contacting the part with a molten alloy bath consisting essentially of lead and at least the one predetermined element, thereby to diffuse the predetermined element into the part but substantially not into the member, and separating the part from the member.

4,372,996

METHOD FOR METALLIZING ALUMINUM PADS OF AN INTEGRATED CIRCUIT CHIP

Elis A. Guditz, and Robert L. Burke, both of Lexington, Mass., assignors to Massachusetts Institute of Technology, Cambridge, Mass.

Continuation of Ser. No. 854,101, Nov. 23, 1977, which is a continuation of Ser. No. 672,217, Mar. 31, 1976, which is a division of Ser. No. 446,865, Feb. 28, 1974, Pat. No. 3,965,277, which is a continuation-in-part of Ser. No. 251,754, May 9, 1972, abandoned. This application Sep. 7, 1979, Ser. No. 73,495

Int. Cl.^{3} C23C *3/00*

U.S. Cl. 427—328 **9 Claims**

1. An immersion zinc bath comprising,
a solution containing the following components in suitable concentration for providing a bath for electroless immersion zinc metallization of aluminum,
H_2O, $ZnSO_4$, HF, Citric acid, and NH_4OH for near-neutral pH.

4,372,997

HEAT- AND FLAME-RESISTANT SHEET MATERIAL

Gary D. Fritze, Hastings, and Joseph Graham, Oakdale, both of Minn., assignors to Minnesota Mining and Manufacturing Company, St. Paul, Minn.

Filed Apr. 9, 1982, Ser. No. 366,822

Int. Cl.^{3} B32B *11/02, 11/08*

U.S. Cl. 428—144 **14 Claims**

1. A fire- and heat-resistant sheet material comprising
at least two fibrous webs formed from a material that does not ignite or soften at temperatures lower than about 150° C.;
asphalt disposed between, impregnated in, and adhering the fibrous webs together;
inorganic filler particles dispersed in the asphalt in a volume ratio between about 1:10 and 1:1 particles to asphalt;

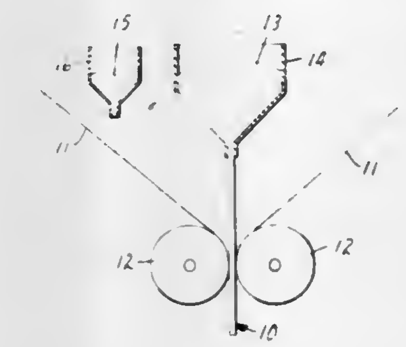

intumescable granules dispersed in the asphalt in an amount of at least about 5 volume-parts per 100 parts of asphalt; and
iron- and halogen-containing material dispersed in the asphalt and which catalyzes the charring of asphalt upon heating of the asphalt to 175° C. or more.

4,372,998

HEAT ADHESIVE TAPES FOR FINISHING HEMS OF TROUSERS, SKIRTS AND LIKE ARTICLES

Yukio Shimada, Toyonaka, Japan, assignor to Shimada Shoji Co., Ltd., Osaka, Japan

Filed Aug. 26, 1980, Ser. No. 181,547

Int. Cl.^{3} B32B *23/02*

U.S. Cl. 428—193 **22 Claims**

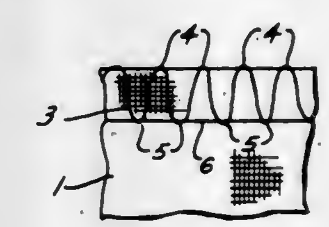

1. A heat adhesive tape for forming finished hems on fabric material such as trousers, skirts or the like by the application of heat, comprising a tape main body made of heat-resistant fabric, said tape main body having a heat adhesive thread of thermoplastic resin disposed in zigzag fashion, said tape main body having incorporated therein a thermoplastic resin fastening thread for fastening said heat adhesive thread to said tape main body, said fastening thread having a lower melting temperature than the melting temperature of said heat adhesive thread, said heat adhesive thread and said fastening thread being constructed and arranged such that upon application of heat thereto said fastening thread will melt first before said heat adhesive thread melts to thereby release the fastening of said heat adhesive thread to said tape main body by said fastening thread before said heat adhesive thread is subsequently melted by the continued application of said heat, said heat adhesive thread thereby melting and fusing to said fabric material to form a finished hem while substantially precluding shrinkage of said tape main body.

4,372,999

STRINGER TAPE FOR SLIDE FASTENERS

Masaharu Satoo, Kurobe, Japan, assignor to Yoshida Kogyo K.K., Tokyo, Japan

Filed Nov. 3, 1980, Ser. No. 203,327

Claims priority, application Japan, Nov. 2, 1979, 54-152837[U]

Int. Cl.³ A44B *19/34*

U.S. Cl. 428—193 **2 Claims**

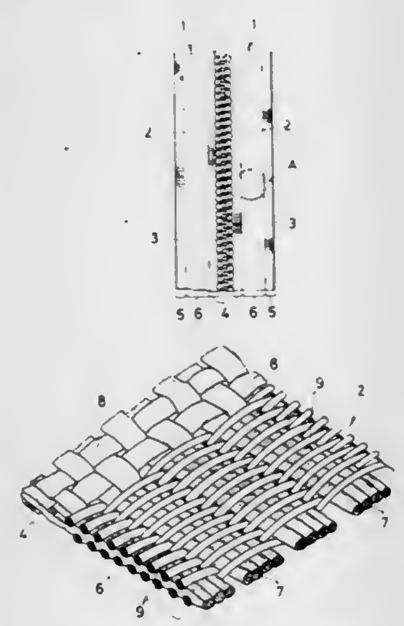

1. A stringer tape for slide fasteners, comprising: an elongate fabric woven of warp threads and sets of weft threads and including a pair of longitudinally extending, spaced first and second marginal portions and an intermediate portion extending between said first and second marginal portions, said warp threads in said intermediate portion including a plurality of thermoplastic filament yarns and being disposed against one another at their interlacings with said sets of weft threads, each said warp thread in said intermediate portion extending meanderlingly in a plane perpendicular to the general plane of said tape alternately over one of said sets of weft threads and under the next of said sets of weft threads, the topmost and undermost surfaces of said intermediate portion being defined dominantly by said thermoplastic filament yarns projecting beyond said weft threads at both said surfaces, said weft threads including a plurality of textured yarns for absorbing melted thermoplastic material, having been tensioned more highly than said warp threads in said intermediate portion while said fabric is being woven, and extending substantially straight.

4,373,000

SOFT, DRAPABLE, NONWOVEN INTERLINING FABRIC

Jürgen Knoke, Weinheim; Manfred Jöst, Hemsbach; Erich Fahrbach, and Bohuslav Tecl, both of Weinheim, all of Fed. Rep. of Germany, assignors to Firma Carl Freudenberg, Weinheim, Fed. Rep. of Germany

Filed Jul. 31, 1981, Ser. No. 289,068

Claims priority, application Fed. Rep. of Germany, Oct. 13, 1980, 3038664

Int. Cl.³ B32B *27/14*

U.S. Cl. 428—198 **8 Claims**

1. A nonwoven interlining fabric capable of being joined to a textile material by means of a thermally activatable adhesive on the surface of said fabric adapted to be in contact with said textile material, said fabric comprising at least two layers, each layer being comprised of staple or endless fibers in random and/or parallel arrangement and at least all less one of such layers containing thermal bonding fibers, said layers being bonded internally and to each other by means of said thermal bonding fibers to form a fabric having a facing surface adapted to be joined to said textile material, said facing surface being that of said layer having, relative to all other layers of said fabric, the lowest distribution of thermal bonding fibers, said surface having applied thereto a patterned arrangement of thermally activatable adhesive.

4,373,001

MOLDED TEXTILE AIR CONDITIONING AND HEAT DUCT

Gerald J. Smith, and Ronald W. Adams, both of Auburn, Me., assignors to Albany International Corp., Menands, N.Y.

Filed Apr. 5, 1982, Ser. No. 365,358

Int. Cl.³ B32B *7/02*

U.S. Cl. 428—212 **1 Claim**

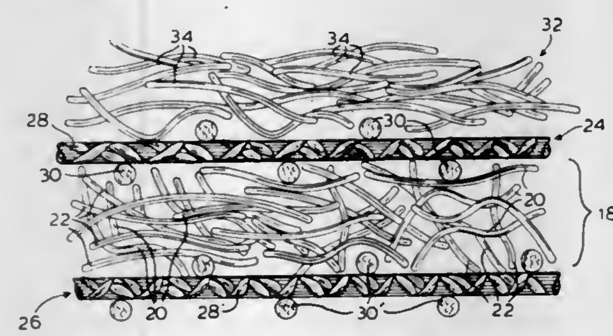

1. A gas-permeable, self-supporting, decorative, air conditioning and heater duct, which comprises;

a core of non-woven, synthetic textile first fibers characterized in part by a first temperature softening point, in admixture with heat softened and rehardened, synthetic, thermoplastic, textile second fibers, characterized in part by a second, lower, temperature softening point;

first and second outer layers which together sandwich the core, each of said outer layers being a fabric of heat-softened and rehardened interwoven or knitted textile yarns; and

a decorative layer of decorative non-woven staple textile fibers having a softening point temperature above the softening point temperature of the second fibers, adhered to the exposed surface of one of said first and second outer layers;

said core, first and second outer layers and decorative layer being interengaged with each other, said interengagement being of the character associated with needled fibrous fabrics;

said first fibers and said second fibers being interlocked with each other and the yarns of the first and second outer layers at points of contact by the heat softening and rehardening of the second fibers and the yarns.

4,373,002

LAMINATED MATERIAL

Peter Petersen-Hoj, Espergärde, Denmark, assignor to Tetra Pak Developpement SA, Pully-Lausanne, Switzerland

Filed Jul. 30, 1980, Ser. No. 173,649

Claims priority, application Switzerland, Jul. 30, 1979, 7027/79

Int. Cl.³ B32B *7/02;* **B28D** *7/02;* **B29C** *19/00;* **C09T** *7/02*

U.S. Cl. 428—213 **5 Claims**

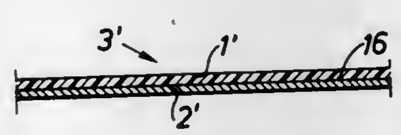

1. A heat-sealable laminated material with good tensile strength characteristics for packing purposes, said laminated material consisting of at least one layer of an orientation-stretched polyester material of predominantly crystalline molecular structure, and at least one layer of PETG material of predominantly amorphous molecular structure, said layers being joined by coextrusion and being stretched together after joining, said layer of PETG material of amorphous molecular structure being substantially thinner than the layer of polyester material of crystalline molecular structure and forming a heat-sealable layer.

2. The laminated material in accordance with claim 1, wherein the layer of polyester material of amorphous molecular structure constitutes 1–30% of the total thickness of the laminate.

4,373,003

HIGH TEMPERATURE SILICON CARBIDE IMPREGNATED INSULATING FABRICS

Calvin Schomburg, Houston, and Robert L. Dotts, Seabrook, both of Tex., assignors to The United States of America as represented by the Administrator of the National Aeronautics and Space Administration, Washington, D.C.

Filed Apr. 6, 1982, Ser. No. 365,950

Int. Cl.³ B32B *5/16*

U.S. Cl. 428—241 **10 Claims**

1. A high temperature insulating article comprising a fabric of closely woven heat resistant fibers having particles of silicon carbide dispersed at least partially throughout the fabric and bonded to the fibers with an emulsifiable polyethylene wax having free carboxyl groups and having a molecular weight of from about 1,500 to about 6,000 and an acid number of from about 2 to about 50.

4,373,004

LASER BEAM-RECORDING MEDIA AND METHOD FOR MANUFACTURING THE SAME

Yoshihiro Asano; Akira Morinaka, and Kei Murase, all of Mito, Japan, assignors to Nippon Telegraph & Telephone Public Corporation, Tokyo, Japan

Filed Jul. 30, 1980, Ser. No. 173,733

Claims priority, application Japan, Aug. 14, 1979, 54-103269; Oct. 29, 1979, 54-138761

Int. Cl.³ B32B *15/02, 17/10;* **G01D** *15/10;* **B05D** *3/06*

U.S. Cl. 428—328 **10 Claims**

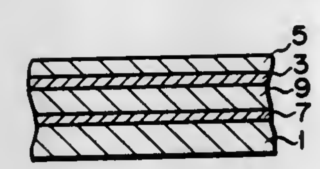

1. A laser beam-recording medium comprising a substrate and a plasma polymerized film containing metal particles homogeneously distributed throughout said film formed on said substrate, said plasma polymerized film being highly cross-linked, said metal particles being selected from the group consisting of Te, Bi, Ag, and In and alloys thereof, and said metal particles being in an amount of from 10 to 90 volume %.

8. A recording medium as recited in any one of claims 1, 2, 3, 4 or 5 wherein said substrate has on its upper surface, a light reflection film, a transparent layer to cause the reflection minimum to occur at the recording wavelength and said plasma polymerized film containing a metal is formed on the upper surface of said transparent layer.

4,373,005

INSULATION MATERIAL

John D. Goodwin, Vivian, La., assignor to Inventure, Inc., Shreveport, La.

Filed May 13, 1981, Ser. No. 263,169

Int. Cl.³ B32B *19/00;* **C04B** *43/00, 31/00*

U.S. Cl. 428—357 **7 Claims**

1. An insulation material, which comprises:

a quantity of inorganic non-flammable fibrous material consisting of loose fibers;

and 10–75% by weight of discrete expanded silicate particles substantially homogeneously dispersed among said loose fibers throughout said fibrous material to form a substantially homogenous mixture adapted for use as a loose fill insulation material.

5. A method of making an insulation material, which comprises the steps of:

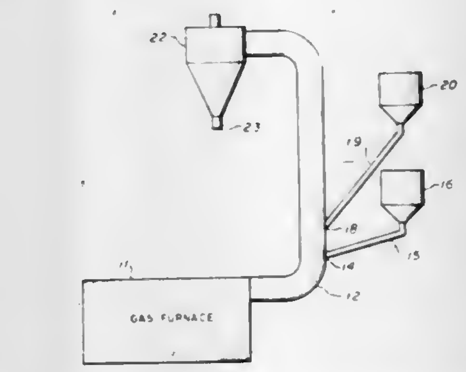

forming a substantially homogeneous mixture of a quantity of inorganic non-flammable fibrous material and a quantity of discrete unexpanded silicate particles;

and heating the mixture to a temperature sufficient to expand the silicate particles without melting said fibrous material.

4,373,006

SILICON CARBIDE COATED CARBON FIBERS AND COMPOSITES

Francis S. Galasso, Manchester, and Richard D. Veltri, East Hartford, both of Conn., assignors to United Technologies Corporation, Hartford, Conn.

Continuation of Ser. No. 65,296, Aug. 9, 1979, abandoned. This application Dec. 10, 1980, Ser. No. 215,203

Int. Cl.³ B32B *9/00;* **D02G** *3/00*

U.S. Cl. 428—368 **1 Claim**

1. An electrically nonconductive fiber which comprises: a carbon fiber having a thin adherent coating consisting of silicon carbide thereon, said silicon carbide coating having a thickness of from about 0.05 to about 1 micron, said silicon carbide coating comprising less than 50% of the cross section of the coated fiber, said silicon carbide layer having on its surface a layer of silicon dioxide for enhanced electrical resistance.

4,373,007

[NON-PHOTOINITIALIO] NON-PHOTOCATALYZED DIPENTAERYTHRITOL POLYACRYLATE BASED COATING COMPOSITIONS EXHIBITING HIGH ABRASION RESISTANCE

Raymond J. Russell, Lincoln Park, N.J., assignor to Panelgraphic Corporation, West Caldwell, N.J.

Filed Nov. 3, 1980, Ser. No. 203,276

The portion of the term of this patent subsequent to Dec. 29, 1998, has been disclaimed.

Int. Cl.³ B32B *27/38;* **B05D** *3/02;* **C08F** *2/50*

U.S. Cl. 428—412 **33 Claims**

1. A composition curable by actinic radiation to form an abrasion resistant product comprising a dipentaerythritol-based polyacrylate, a cellulose ester comprising the reaction product of cellulose with at least one organic carboxylic acid having from about 2 to about 4 carbon atoms or a vinyl chloride-vinyl acetate containing polymer, wherein said composition contains no photoinitiator.

9. A composition curable by actinic radiation to form an abrasion resistant product comprising dipentaerythritol pentaacrylate, a cellulose acetate butyrate containing on the average from about 15% to 50% butyryl groups, from about 1% to 30% acetyl groups and from about 1% to 5% hydroxyl groups or a partially hydrolyzed vinyl chloride-vinyl acetate copolymer containing from about 50% to 95% combined vinyl chloride monomer from about 2% to about 35% combined vinyl acetate monomer and from about 3% to about 15% combined vinyl alcohol monomer, wherein the weight ratio of said penta-

erythritol to said butyrate or copolymer is from about 6 to 1 to about 100 to 1, and wherein said composition contains no photoinitiator.

24. A method of providing an abrasion resistant coating on a substrate comprising:

(a) forming a composition curable by actinic radiation comprising a dipentaerythritol-based polyacrylate, a cellulose ester comprising the reaction product of cellulose with at least one organic carboxylic acid having from about 2 to about 4 carbon atoms or a vinyl chloride-vinyl acetate containing copolymer wherein said composition contains no photoinitiator;

(b) applying said composition to said substrate; and

(c) irradiating said composition with actinic radiation to effect curing thereof.

4,373,008

AMBIENT HYDROCURABLE COATING COMPOSITIONS

William D. Emmons, Huntingdon Valley, and Wayne E. Feely, Rydal, both of Pa., assignors to Rohm and Haas Company, Philadelphia, Pa.

Continuation-in-part of Ser. No. 116,734, Jan. 30, 1980, Pat. No. 4,299,867. This application Nov. 9, 1981, Ser. No. 319,752

Int. Cl.³ B05D *3/02*

U.S. Cl. 428—413 **9 Claims**

8. A method for producing a cured coating, impregnating, binding or adhesive film which comprises the steps of forming a liquid film-forming composition by mixing the components

(1) a soluble addition polymer containing a plurality of pendant groups containing a 2,2-dialkyl-oxazolidine or a 2,2-cycloalkyloxazolidine group and

(2) at least one polyester obtained by the reaction of a polyol having at least two hydroxyl groups with acryloxypropionic acid or derivative thereof,

the ratio of component (2) to component (1) being in the range of 0.2 to 3.5 equivalents of unsaturated acryloxy group in component (2) per equivalent of potential secondary amine nitrogen in component (1), applying the composition to at least one surface of a substrate to be coated at ambient conditions of temperatures and relative humidity to deposit a film coating the surface of, or impregnating any pores or interstitial openings extending into the substrate, and then curing the film by exposure to ambient conditions of temperature and relative humidity.

9. An article produced by the method according to claim 8.

4,373,009

METHOD OF FORMING A HYDROPHILIC COATING ON A SUBSTRATE

R. Alastair Winn, Santa Barbara, Calif., assignor to International Silicone Corporation, San Diego, Calif.

Filed May 18, 1981, Ser. No. 264,957

Int. Cl.³ A61M *25/00*

U.S. Cl. 428—424.2 **56 Claims**

1. The method of bonding a hydrophilic coating to the surface of a biomedical substrate comprising:

applying a coating from a solvent solution comprised of a polyisocyanate to the surface of said substrate to form a coupling coating with unreacted isocyanates;

applying a solvent solution comprised of a hydrophilic copolymer made from monomers of vinylpyrollidone and monomers containing active hydrogen which will react with isocyanate to form a covalent bond between said coupling coating and said hydrophilic copolymer;

evaporating the solvent and reacting said isocyanates.

4,373,010

NON-RESINOUS, UNCURED TIRE RETARDANT AND PRODUCTS PRODUCED THEREWITH

William J. Oberley, Monroeville, Pa., assignor to Koppers Company, Inc., Pittsburgh, Pa.

Filed Oct. 14, 1980, Ser. No. 196,540

Int. Cl.³ B32B *23/04, 29/00*

U.S. Cl. 428—532 **34 Claims**

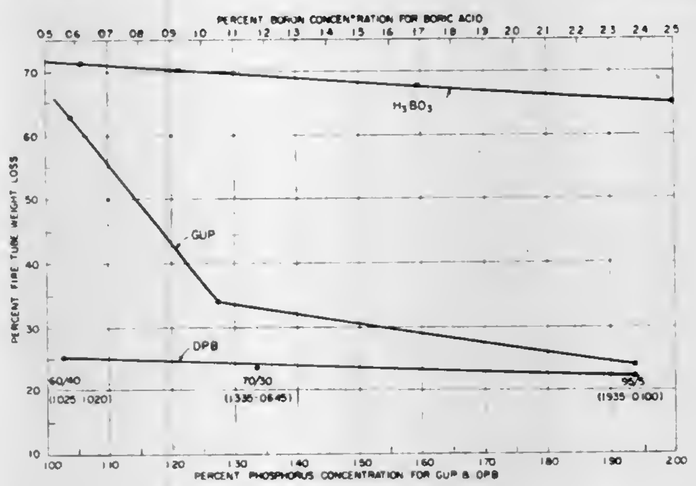

1. A synergistic fire retardant composition useful for treating cellulosic materials consisting essentially of the partial reaction product of dicyandiamide, phosphoric acid, boric acid and water wherein prior to reaction the mole ratio of dicyandiamide to phosphoric acid is from 1.0 to about 0.8–1.2 and the mole ratio of boric acid to combined dicyandiamide and phosphoric acid is from about 0.2–1.5 to 1.0.

19. A cellulosic material impregnated with a fire retardant amount of the synergistic fire retardant composition of claim 1.

4,373,011

BLENDS OF ALGIN, TAMARIND, AND A POLYCATIONIC ELECTROCONDUCTIVE POLYMER

Robert I. Yin, LaJolla, Calif., assignor to Merck & Co., Inc., Rahway, N.J.

Continuation-in-part of Ser. No. 169,578, Jul. 17, 1980, abandoned. This application May 29, 1981, Ser. No. 268,525

Int. Cl.³ B32B *21/04*

U.S. Cl. 428—537 **3 Claims**

1. An aqueous solution comprising 0.4% of a blend of tamarind kernal powder and sodium alginate (4:1 weight ratio) and 12% of a polycationic, electroconductive, linear chain, repeating ring polymer having quaternary ammonium salt groups on the backbone said polymer being a homopolymeric molecular chain of repeating units of a formula selected from the group consisting of:

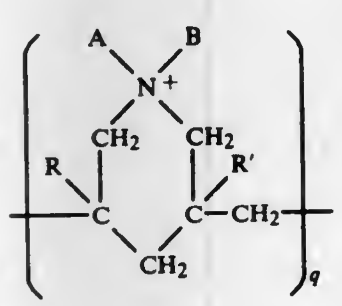

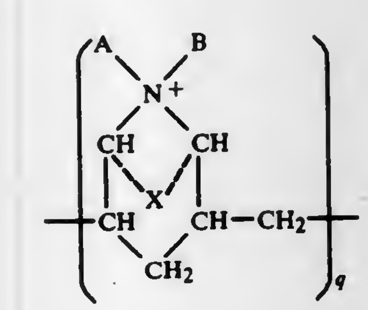

-continued

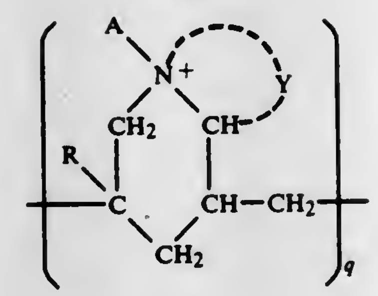

and

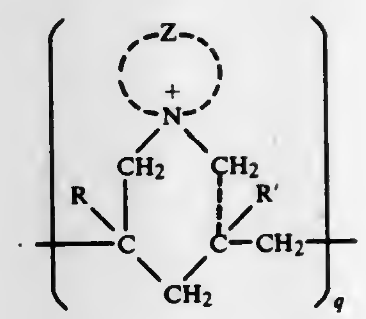

said polymer having an intrinsic viscosity in 0.1 N potassium chloride of at least between about 0.5 and 2.0, and wherein

A and B independently represent a member selected from the class consisting of alkyl and phenyl radicals on which any substituents are selected from the group consisting of hydroxy, amido, carboloweralkoxy, loweralkoxy, phenoxy, naphthoxy, cyano, thioloweralkoxy, thiophenoxy, loweralkoyl, 5- and 6-membered cycloalkyl, tri-(loweralkyl)ammoniumloweralkyl, with, on the alkyl groupings only, a nitro group, and, on the phenyl radicals only, a halogen atom; and, taken together, A and B represents a member selected from the group consisting of

—CH_2—CH_2—,
—CH(CH_3)—CH(CH_3)—CH=CH—CH=CH—, —CH=CH—CH=N—

and

—CH=CH—N=CH—

R and R' independently represent a member selected from the class consisting of hydrogen, chloro, bromo, loweralkyl, and phenyl radicals;

X represents a divalent radical of the formula

$$—CH_2—(O)_n—(CH_2)_m—$$

Y represents a divalent radical of the formula

$$—(CH_2)_p—(O)_n—CH_2—$$

Z represents a divalent radical of the formula

$$—(CH_2)_p—(O)_n—(CH_2)_2—$$

and

n is one of the numbers 0 and 1;

m is one of the numbers 1 and 2;

p is one of the numbers 2 and 3 and the symbol Q is an integer representing the number of units in the molecular chain.

4,373,012

CASINGS AND PRESSED PARTS UTILIZED FOR THE EXTRUSION OF ARTICLES, PARTICULARLY PIPES, AND MANUFACTURING PROCESS OF SUCH CASINGS AND PRESSED PARTS

Christer Aslund; Hans Eriksson, and Claes Tornberg, all of Torshälla, Sweden, assignors to Granges Nyby AB, Nybybruk, Sweden

PCT No. PCT/EP79/00084, § 371 Date Jun. 26, 1980, § 102(e) Date Jun. 26, 1980, PCT Pub. No. WO80/00084, PCT Pub. Date May 1, 1980

PCT Filed Oct. 26, 1979, Ser. No. 195,610

Claims priority, application Fed. Rep. of Germany, Oct. 26, 1978, 2846658; Oct. 26, 1978, 2846659

Int. Cl.³ B22F *3/00*

U.S. Cl. 428—558 **21 Claims**

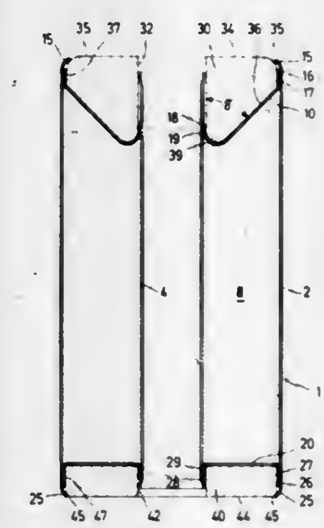

1. A capsule having an annular transverse cross section for isostatically producing a pressing for use in the extrusion of dense metallic tubes, said capsule comprising a tubular thin-walled sheet metal container to be filled with a powder and having plug-like inserts for closing each of its opposite ends, wherein at least the insert at the front end of the capsule is formed of ductile material, has a generally annular shape with a central bore, is provided with a substantially flat end face at the front end of the capsule, and has an external diameter which decreases rearwardly from a point of maximum external diameter to a wall defining said central bore, and wherein at least the outer wall of the thin-walled sheet metal container has substantially the same strength properties in the axial direction along its entire circumference.

4,373,013

ELECTROCONDUCTIVE POWDER AND PROCESS FOR PRODUCTION THEREOF

Motohiko Yoshizumi, Urawa, Japan, assignor to Mitsubishi Kinzoku Kabushiki Kaisha, Tokyo, Japan

Filed Sep. 12, 1980, Ser. No. 186,555

Claims priority, application Japan, Sep. 14, 1979, 54-117342; Feb. 13, 1980, 55-16217; Jun. 23, 1980, 55-84997

Int. Cl.³ B22F *37/00*

U.S. Cl. 428—570 **6 Claims**

1. Electroconductive powder consisting essentially of titanium oxide particles and a coating layer of a mixture of antimony oxide and tin oxide provided on the surfaces of the titanium oxide particles, wherein said titanium oxide particles

have a rutile crystalline structure, a purity of at least 98 percent, and a specific surface area of 1 to 20 meter^2/gram, and

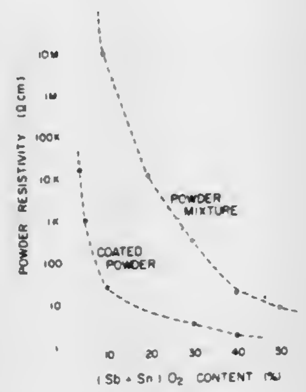

said coating layer has a thickness of 0.001 to 0.07 μm and contains 0.1 to 30 percent by weight of antimony.

4,373,014
PROCESS USING NOBLE METAL-CHROMIUM ALLOY CATALYSTS IN AN ELECTROCHEMICAL CELL

Douglas A. Landsman, West Hartford, and Francis J. Luczak, Galstonbury, both of Conn., assignors to United Technologies Corporation, Hartford, Conn.
Division of Ser. No. 160,517, Jun. 18, 1980, Pat. No. 4,316,944. This application Jun. 29, 1981, Ser. No. 278,249
Int. Cl.^{3} H01M *8/00*
U.S. Cl. 429—13 3 Claims

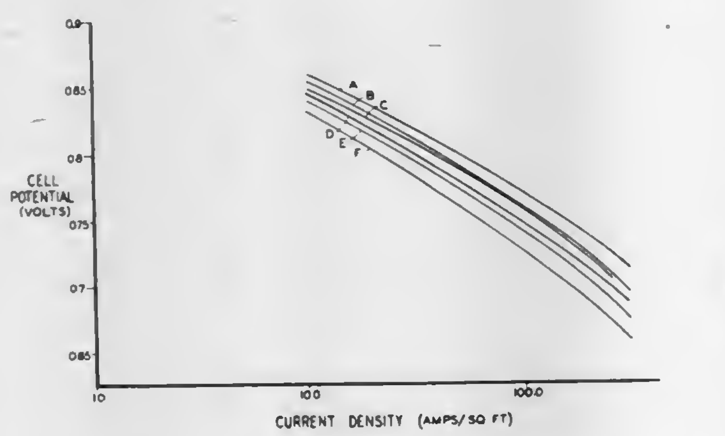

1. A process in an electrochemical cell involving catalytically reducing oxygen, the step of catalytically reducing oxygen using a catalyst comprising a platinum-chromium alloy, said alloy having a catalytic activity for the reduction of oxygen at least twice that of the platinum in unalloyed form wherein the surface area of the platinum in the alloy is at least 30 m^2/g.

4,373,015
ELECTRIC STORAGE BATTERIES

Kenneth Peters, Worsley, and Barry Culpin, Bolton, both of England, assignors to Chloride Group Limited, London, England
PCT No. PCT/GB80/00081, § 371 Date Jan. 9, 1981, § 102(e) Date Jan. 9, 1981, PCT Pub. No. WO80/02471, PCT Pub. Date Nov. 13, 1980
PCT Filed Apr. 25, 1980, Ser. No. 229,565
Claims priority, application United Kingdom, May 9, 1979, 7916119
Int. Cl.^{3} H01M *10/06*
U.S. Cl. 429—57 9 Claims

1. A recombinant lead acid electric storage battery in which the positive and negative plates in each cell are separated by separators of electrolyte and gas permeable compressible fibrous separator material comprising organic polymeric fibers having diameters ranging from 0.01 μm or less up to 10 μm with an average diameter of less than 10 μm, the weight to fiber density ratio being at least 20, said separator being compressed between said plates and the separator material having a wicking height of at least 5 cms and an electrolyte absorption ratio of at least 100 percent, wherein the electrolyte volume (E) in the battery is at least 0.8(X+Y), where X is the total pore volume of the separators in the dry state and Y is the total pore volume of the positive and negative active materials in the dry fully charged state and wherein the battery at least when fully charged has substantially no free unabsorbed electrolyte whereby substantial oxygen gas recombination occurs in the battery at charging rates not in excess of C/20.

4,373,016
PROCESS OF TRANSFERRING MONOCOMPONENT DEVELOPING POWDER WITH A VOLATILE, DIELECTRIC LIQUID

Donald H. M. Kings, St. Nicolas D'Aliermont; Jean-Claude Marckmann, Arques la Bataille, and Pham K. Quang, Dieppe, all of France, assignors to Rhone-Poulenc Systemes, Paris, France
Filed May 12, 1981, Ser. No. 262,827
Claims priority, application France, May 12, 1980, 80 10611
Int. Cl.^{3} G03G *13/16*
U.S. Cl. 430—126 19 Claims

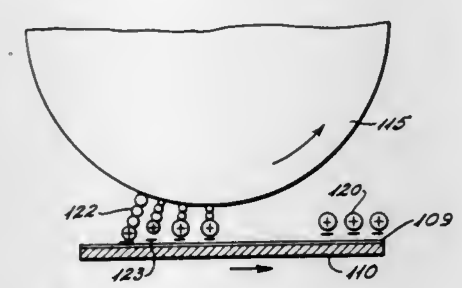

1. A process of electrographic reproduction comprising the steps of:

(a) Forming an image of electrostatic charges on a temporary support,
(b) Developing the image with a dry, conductive monocomponent developing powder in which a charge of either polarity is induced by the image of electrostatic charges to form a powder image, and
(c) Transferring the powder image to an arbitrary support having deposited thereon a volatile dielectric liquid having a volume resistivity of greater than $10^3\Omega cm^2/cm$, said volatile dielectric liquid not capable of readily dissolving the resins in the developing powder, the arbitrary support or the temporary support.

4,373,017
PHOTOSENSITIVE COMPOUND AND PHOTOSENSITIVE MATERIAL CONTAINING IT

Toyoaki Masukawa, Hino; Wataru Ishikawa, Hachioji; Kenichiro Okaniwa, and Kiyoshi Yamashita, both of Hino, all of Japan, assignors to Konishiroku Photo Industry Co., Ltd., Japan
Filed Mar. 5, 1981, Ser. No. 240,912
Claims priority, application Japan, Mar. 5, 1980, 55-28530; Sep. 5, 1980, 55-123325
Int. Cl.^{3} G03C *1/68, 1/52*
U.S. Cl. 430—270 14 Claims

1. A photosensitive material having a photosensitive layer provided on a support which photosensitive layer comprises a photosensitive compound which forms a color dye directly under irradiation of ultraviolet rays, said compound being represented by the formula [i]:

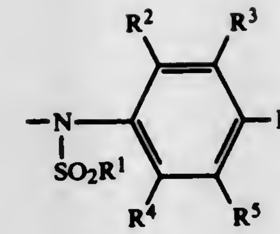

[i]

wherein [COUP] represent a 4-equivalent yellow, magenta or cyan coupler from which a hydrogen is removed at a coupling position thereof, B is a hydroxy group or

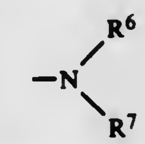

wherein R^6 and R^7 are individually an alkyl group or they may form a 1-piperidino, 1-piperazino, 1-pyrolidino or 4-morpholino group together with each other,

R^1 is an alkyl, aryl, alkylamino or arylamino group, and R^2, R^3, R^4 and R^5 individually are a hydrogen or halogen atom or aliphatic or aromatic group, or R^2 and R^3 may be fused to form a naphthalene ring.

8. A photosensitive presensitized printing plate having a photosensitive resin layer provided on a support which contains a photosensitive compound which forms a color dye directly under irradiation of ultraviolet rays, said compound being represented by the formula [i]:

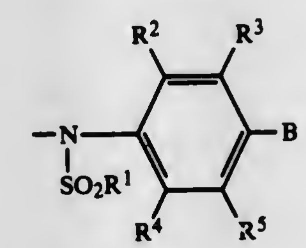

[i]

wherein [COUP] represent a 4-equivalent yellow, magenta or cyan coupler from which a hydrogen is removed at a coupling position thereof, B is a hydroxy group or

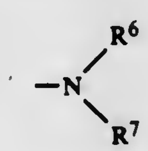

wherein R^6 and R^7 are individually an alkyl group or they may form a 1-piperidino, 1-piperazino, 1-pyrolidino or 4-morpholino group together with each other,

R^1 is an alkyl, aryl, alkylamino or arylamino group, R^2, R^3, R^4 and R^5 individually are a hydrogen or halogen atom or aliphatic or aromatic group.

4,373,018
MULTIPLE EXPOSURE MICROLITHOGRAPHY PATTERNING METHOD

Elsa Reichmanis, Piscataway; Bernard J. Roman, Summit; King L. Tai, Berkeley Heights, and Cletus W. Wilkins, Jr., Plainfield, all of N.J., assignors to Bell Telephone Laboratories, Incorporated, Murray Hill, N.J.
Filed Jun. 5, 1981, Ser. No. 270,792
Int. Cl.^{3} G03C *5/00, 1/76*
U.S. Cl. 430—312 6 Claims

1. Method for making an article, said method comprising patterning a surface by alteration of at least one selected portion of said surface, patterning comprising

depositing on said surface a first layer which consists essentially of an organic radiation-sensitive material,
depositing on said first layer a second layer which consists essentially of silver-sensitized germanium-selenium,
exposing at least one area of said second layer to first actinic radiation so as to define a pattern in said second layer,
developing said pattern in said second layer by removal either of said area of said second layer or of a domain of said second layer which is complementary to said area of said second layer so as to expose at least one region of said first layer,
exposing at least said region of said first layer to second actinic radiation so as to replicate said pattern in said first layer,
developing said pattern in said second layer by removal of said area or domain of said first layer so as to expose said selected portion of said surface, and
altering said selected portion of said surface by exposure to a fabrication agent.

4,373,019
THICK FILM FINE PATTERN FORMING METHOD

Yutaka Watanabe, Machida, and Hisayasu Matsuo, Yokohama, both of Japan, assignors to Fujitsu Limited, Kawasaki, Japan
PCT No. PCT/JP79/00228, § 371 Date Apr. 31, 1980, § 102(e) Date Apr. 9, 1980, PCT Pub. No. WO80/00520, PCT Pub. Date Mar. 20, 1980
PCT Filed Aug. 28, 1979, Ser. No. 201,023
Claims priority, application Japan, Aug. 31, 1978, 53-106665
Int. Cl.^{3} H05K *3/02*
U.S. Cl. 430—317 3 Claims

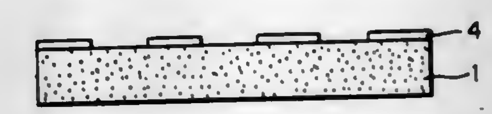

1. A method of forming a thick film fine pattern on a substrate, comprising the steps of:

coating the surface of the substrate with a thermoplastic resin bonding layer;
coating said bonding layer with a thick film circuit forming paste including an organic solvent;
drying the paste;
coating the dried paste with water soluble photoresist;
exposing a pattern onto the photo-resist;
developing the photo-resist to expose portions of the paste;
eliminating the exposed paste; and
baking the substrate.

4,373,020
DECOLORIZABLE IMAGING SYSTEM

John M. Winslow, South Saint Paul, Minn., assignor to Minnesota Mining and Manufacturing Company, St. Paul, Minn.
Continuation-in-part of Ser. No. 199,426, Oct. 22, 1980, Pat. No. 4,336,323, which is a continuation-in-part of Ser. No. 101,144, Dec. 7, 1979, abandoned. This application Jun. 10, 1981, Ser. No. 272,357
The portion of the term of this patent subsequent to Jun. 22, 1999, has been disclaimed.
Int. Cl.^{3} G03C *1/72*
U.S. Cl. 430—339 12 Claims

1. An imageable layer comprising a polymeric binder, and within said binder (1) a dye, (2) an acid, and (3) a nitrate salt, said dye being present in said binder in sufficient concentration to provide an optical density of at least 0.1 in the visible region of the electromagnetic spectrum or to absorb at least 20% of incident radiation in a 50 nm range within the infrared or ultraviolet wavelengths of the electromagnetic spectrum, said nitrate ion being present in a ratio of at least 0.1 moles/mole of dye, said nitrate salt in said binder being capable of liberating a sufficient quantity of an oxidizing agent selected from the

class consisting of HNO_3, NO, NO_2, and N_2O_4 when heated to 200° C. for 60 seconds to oxidize said dye to a different color or colorless state, and the acid is present as from 0.01 to 50 times the molar amount of nitrate.

4,373,021
INDOLIZINONE DYES AND COMPOSITIONS, ELEMENTS AND METHODS USING SAME
George L. Fletcher, Pittsford, and Donald H. Wadsworth, Rochester, both of N.Y., assignors to Eastman Kodak Company, Rochester, N.Y.
Filed Jun. 29, 1981, Ser. No. 278,023
Int. Cl.³ G03C *5/24*
U.S. Cl. 430—374 7 Claims

1. An imaging element reactable with pyridine to form a dye image, said element comprising:

a support having thereon a composition comprising a photodecomposable mixture of a cyclopropenone having the structure

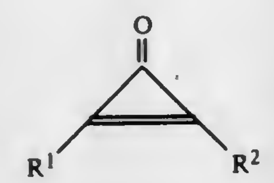

and either

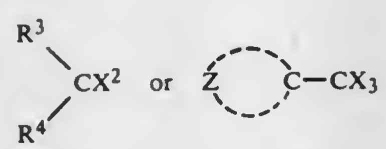

2a 2b

wherein

R^1 and R^2 are individually alkyl of 1 to 5 carbon atoms, aryl of 6 to 10 carbon atoms, or a heterocyclic group of from 5 to 6 nuclear atoms selected from the group consisting of carbon, oxygen, and sulfur;

R^3 is selected from the group consisting of aryl of 6 to 10 nuclear carbon atoms and bearing a bathochromic substituent; nitro; carbonyl; amide; sulfonyl; and cyano;

R^4 is hydrogen, alkyl of 1 to 5 carbon atoms halogen, or one of the group of R^3;

X is halogen; and,

Z represents the non-metallic atoms necessary to complete one, two or three fused rings of 5 to 14 nuclear atoms selected from the group consisting of carbon and nitrogen.

4,373,022
METHOD AND APPARATUS FOR PRODUCING A HIGH SPEED HIGH RESOLUTION RADIATION SENSITIVE ARTICLE AND A HIGH SPEED HIGH RESOLUTION RADIATION SENSITIVE ARTICLE
Arnold Hoffman, 6 Hagra St., Rehovot, Israel, and Shmuel Engelstein, Rehovot, Israel, assignors to Arnold Hoffman, Rehovot, Israel
Filed Dec. 27, 1979, Ser. No. 107,559
Claims priority, application Israel, Dec. 28, 1978, 56324
Int. Cl.³ G03C *1/76, 3/00*
U.S. Cl. 430—434 13 Claims

1. A method for producing a high resolution high speed photographic black and white image comprising the steps of:

preparing radiation sensitive material having relatively large and relatively small grains of silver halide;

arranging the silver halide grains so as to permit the large and small grains to be developed under independent development conditions;

exposing the radiation sensitive material; and

chemically developing the large grains with one chemical developer and independently developing the small grains with another chemical developer, so as to develop both the large and small grains.

5. In a photographic negative film comprising at least one transparent impermeable support and a coating of silver halide particles on said at least one support, the improvement wherein two populations of said silver halide particles are provided, one said population comprising relatively small grains on one side of said support and another said population comprising relatively large grains on the other side of said support, the difference in the sizes of said relatively small and large grains being at least 10%, and the photographic speeds of said small and large grains differing from one another by not more than three stops;

said two populations of silver halide particles being located on said at least one support for simultaneous exposure; and

said film including said impermeable support to inhibit diffusion of chemical developers therethrough, and comprising means to provide fully independent chemical development for each of said two populations of silver halide particles wherein said two populations are separated from one another by said support so as to prevent chemical developer for one said population from contacting the other said population, whereby superimposed negative images are provided.

4,373,023
PROCESS FOR NEUTRALIZING HEPARIN
Robert S. Langer, Cambridge; Robert Linhardt, Somerville; Charles L. Cooney, Brookline; Parrish M. Galliher, West Newton; Margaret M. Flanagan, Somerset, all of Mass., and Michael D. Klein, Ann Arbor, Mich., assignors to Massachusetts Institute of Technology, Cambridge, Mass.
Filed Oct. 14, 1980, Ser. No. 196,720
Int. Cl.³ A01N *1/02;* A61K *35/14*
U.S. Cl. 435—2 5 Claims

1. In the process for treating the blood of a patient extracorporeally wherein heparin is introduced into the blood to substantially prevent blood coagulation, the improvement which comprises passing said treated blood containing heparin into contact with an immobilized heparinase, said heparinase being derived from *Flavobacterium heparinum,* in order to deactivate said heparin prior to reintroducing said treated blood into the patient.

4,373,024
APPARATUS USEFUL FOR FOAM BREAKING
Harold R. Hunt, Bartlesville, Okla., assignor to Phillips Petroleum Company, Bartlesville, Okla.
Filed Dec. 2, 1980, Ser. No. 212,187
Int. Cl.³ B01D *19/02*
U.S. Cl. 435—41 10 Claims

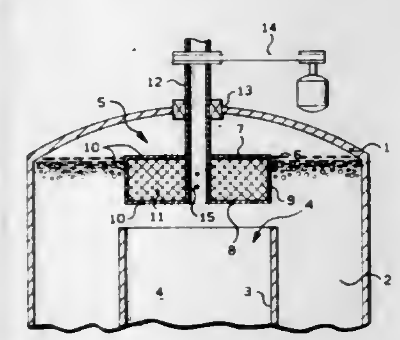

8. In a fermentation process comprising

(a) subjecting a mixture comprising a nutrient medium and a microorganism to fermentation conditions,

(b) generating a foam comprising a liquid phase of nutrient and microorganism cells and a gaseous phase,

(c) passing said foam to a foam breaking operation thus separating said foam into said liquid phase and said gas phase by passing the foam into contact with rapidly rotating surfaces, the improvement comprising

using as said surfaces, paths defining surfaces formed in a foam breaking body by a multitude of packing material elements that are in contact with each other and that are shaped and arranged such as to form a large number of fluid paths between an outer and an inner surface of said body, said paths having an average diameter in the range of 0.04 to 1 inch,

generating a pressure gradient between said outer and said inner surfaces of said body thus forcing said foam to move into contact with the outer surface of said rotating body and into said paths,

withdrawing said gas phase from the inner surface of said body.

4,373,025
PROCESS FOR THE ISOMERIZATION OF GLUCOSE
Richard W. Neuzil, Downers Grove, and James W. Priegnitz, Elgin, both of Ill., assignors to UOP Inc., Des Plaines, Ill.
Continuation-in-part of Ser. No. 973,298, Dec. 26, 1978, abandoned, which is a continuation-in-part of Ser. No. 690,769, May 27, 1976, abandoned. This application Nov. 3, 1980, Ser. No. 203,786
Int. Cl.³ C12P *19/24*
U.S. Cl. 435—94 7 Claims

1. A process for the isomerization of glucose into fructose and recovery of said fructose which comprises first contacting an aqueous glucose solution with a glucose isomerase in an isomerization zone having an isomerization effluent stream to isomerize at least a portion of said glucose into fructose and to form said isomerization zone effluent stream comprising glucose and an increased quantity of fructose and then:

(a) contacting said isomerization effluent stream in a separation zone maintained at a temperature in the range of from 20° C. to 200° C. and a pressure in the range of from atmospheric to 500 psig with an adsorbent consisting essentially of an X zeolite containing potassium cations at exchangeable cationic sites to selectively adsorb said glucose;

(b) removing from said adsobent a raffinate stream selectively rich in fructose;

(c) contacting said adsorbent at a temperature and pressure within said ranges of step (a) with a desorbent material to desorb said adsorbed glucose from said adsorbent and thereby form a glucose extract stream; and,

(d) removing from said adsorbent an extract stream selectively rich in glucose.

4,373,026
MICROBIAL POLYAMIDE OXIDASE PC-3 AND PROCESS FOR PREPARATION THEREOF
Hideaki Yamada; Yoshiki Tani, and Kimiyasu Isobe, all of Kyoto, Japan, assignors to Amano Pharmaceutical Co., Ltd., Nagoya, Japan
Filed Dec. 12, 1980, Ser. No. 216,302
Claims priority, application Japan, Dec. 24, 1979, 54-166953
Int. Cl.³ C12R *1/82;* C12N *9/06;* C12P *21/00*
U.S. Cl. 435—191 5 Claims

1. Microbial polyamine oxidase PC-3 having the following physicochemical properties:

(1) Reactivity:
it reacts with spermidine to form 1 mol of putrescine, 1 mol of 3-aminopropionaldehyde and 1 mol of hydrogen peroxide from 1 mol of spermidine and it reacts with spermine to form 1 mol of putrescine, 2 mol of 3-aminopropionaldehyde and 2 mols of hydrogen peroxide from 1 mol of spermine;

(2) Substrate specificity:
it reacts with spermidine and spermine, but it does not react with other amines;

(3) Optimum pH value:
the optimum pH for reaction with spermidine is about 5.0 and the optimum pH for reaction with spermine is about 9.5;

(4) pH Stability:
when it is treated at 30° C. for 10 minutes, the residual ratio of the activity with either spermidine or spermine as the substrate at a pH from 3.0 to 5.0 is higher than 85%;

(5) Optimum temperature:
when spermidine is a substrate, the optimum temperature is about 25° C. at a pH of 6.5 and when spermine is a substrate, the optimum temperature is about 35° C. at a pH of 6.5 and is about 40° C. at a pH of 7.0;

(6) Temperature stability:
in the case where spermine is a substrate, when it is treated at 35° C. for 10 minutes at a pH of 4.0, the residual ratio of the activity is higher than 95%, and if it is treated at 20° C. for 10 minutes at a pH of 7.0, the residual ratio of the activity is higher than 85%;

(7) Absorption spectrum and coenzyme:
from the fact that maximum absorptions are observed at 375 nm and 450 nm in the absorption spectrum, it is confirmed that the oxidase is a flavin protein, and FAD is present as a coenzyme in an amount of 2 molecules per molecule of the oxidase;

(8) Influences of inhibitors and metal ions:
in the case where spermine is a substrate, the activity is inhibited by PCMB, monoiodoacetic acid, a silver ion and a mercury ion, and in the case where spermidine is a substrate, the activity is inhibited by a silver ion and an aluminum ion;

(9) Isoelectric point:
the isoelectric point is 5.4 to 5.6;

(10) Molecular weight:
the molecular weight is 160,000 as determined according to the gel filtration method using Sephadex G-200;

(11) Molecular weight of Subunit:
the molecular weight of the subunit is 80,000 as determined according to the SDS disc electrophoresis method; and

(12) Crystal form:
it takes the form of a needle crystal.

2. A process for the preparation of microbial polyamine oxidase having the following physicochemical properties:

(1) Reactivity:
it reacts with spermidine to form 1 mol of putrescine, 1 mol of 3-aminopropionaldehyde and 1 mol of hydrogen peroxide from 1 mol of spermidine and it reacts with spermine to form 1 mol of putrescine, 2 mol of 30 aminopropionaldehyde and 2 mols of hydrogen peroxide from 1 mol of spermine;

(2) Substrate specificity:
it reacts with spermidine and spermine, but it does not react with other amines;

(3) Optimum pH value:
the optimum pH for reaction with spermidine is about 5.0 and the optimum pH for reaction with spermine is about 9.5;

(4) pH Stability:
when it is treated at 30° C. for 10 minutes, the residual ratio of the activity with either spermidine or spermine as the substrate at a pH from 3.0 to 5.0 is higher than 85%;

(5) Optimum temperature:
when spermidine is a substrate, the optimum temperature is about 25° C. at a pH of 6.5 and when spermine is a substrate, the optimum temperature is about 35° C. at a pH of 6.5 and is about 40° C. at a pH of 7.0;

(6) Temperature stability:
in the case where spermine is a substrate, when it is treated at 35° C. for 10 minutes at a pH of 4.0, the residual ratio of the activity is higher than 95%, and if it is treated at 20° C. for 10 minutes at a pH of 7.0, the residual ratio of the activity is higher than 85%;

(7) Absorption spectrum and coenzyme:
from the fact that maximum absorptions are observed at 375 nm and 450 nm in the absorption spectrum, it is confirmed that the oxidase is a flavin protein, and FAD is present as a coenzyme in an amount of 2 molecules per molecule of the oxidase;

(8) Influence of inhibitors and metal ions:
in the case where spermine is a substrate, the activity is inhibited by PCMB, monoiodoacetic acid, a silver ion and a mercury ion, and in the case where spermidine is a substrate, the activity is inhibited by a silver ion and aluminum ion;
(9) Isoelectric point:
the isoelectric point is 5.4 to 5.6;
(10) Molecular weight:
the molecular weight is 160,000 as determined according to the gel filtration method using Sephadex G-200;
(11) Molecular weight of Subunit:
the molecular weight of the subunit is 80,000 as determined according to the SDS disc electrophoresis method; and
(12) Crystal form:
it takes the form of a needle crystal, which comprises, culturing a strain of the genus penicillium producing said oxidase in a nutrient culture medium containing spermidine or spermine under conditions sufficient to accumulate said oxidase and recovering the oxidase.

4,373,027

MICROPARTICLES, PREPARATION THEREOF AND APPLICATIONS THEREOF IN BIOLOGY, PARTICULARLY IN THE CULTURE OF HUMAN DIPLOID CELLS

Armand Berneman, 11, Rue de Crussol, 75011 Paris; Alain David, Rue de Rollet-Cuise la Motte, 60350 Berneuil sur Aisne; Florian Horaud, 2, rue Albert de Mun, 92190 Meudon, and Emile Segard, Village du Parc Rimbertlieu-Villers sur Coudun, 60150 Thourotte, all of France

Filed Dec. 5, 1980, Ser. No. 213,314

Claims priority, application France, Dec. 5, 1979, 79 29910

Int. Cl.^{3} C12N *5/00, 5/02;* **C12M** *3/00, 3/04*

U.S. Cl. 435—240 **48 Claims**

1. Microparticles comprising particles or beads whose surface at least is formed from a reticulated protein, chosen from protein capable of forming a visco-elastic mass which after reticulation has a fibrous-type structure in a mesh network configuration.

4,373,028

CULTURE OF NOCARDIA ATCC 31309

Eiji Higashide, Takarazuka; Seiichi Tanida, Kyoto; Masayuki Muroi, Suita, and Mitsuko Asai, Takatsuki, all of Japan, assignors to Takeda Chemical Industries, Ltd., Japan

Division of Ser. No. 930,317, Aug. 2, 1978, Pat. No. 4,298,600. This application Jul. 14, 1981, Ser. No. 283,544

Claims priority, application Japan, Aug. 4, 1977, 52-93875

Int. Cl.^{3} C12N *1/20*

U.S. Cl. 435—253 **1 Claim**

1. A biologically pure culture of the microorganism belonging to the genus Nocardia having the characteristics identifiable with those of ATCC-31309, said culture being capable of producing in a culture medium containing assimilable carbon and digestible nitrogen sources, a recoverable amount of Antibiotic C-14482 A_1.

4,373,029

DEVICE FOR CULTIVATION OF MATRIX-BOUND BIOLOGIC CELL SYSTEMS

Stephan Nees, Waldwiesenstrasse 30b, 8000 Munich 70, Fed. Rep. of Germany

Filed Aug. 21, 1980, Ser. No. 180,035

Claims priority, application Fed. Rep. of Germany, Aug. 24, 1979, 2934328

Int. Cl.^{3} C12M *3/02, 3/00;* **B01F** *11/00, 9/00*

U.S. Cl. 435—286 **13 Claims**

1. Apparatus for the cultivation of matrix-bound biologic cell systems on microcarrier particulates suspended in a nutrient medium comprising
a housing member having a longitudinal axis,
a culture vessel for containing said culture bearing microcarrier particulates in a nutrient medium removably insertable into said housing,
means for pivotally displacing said housing member and contained culture vessel through predetermined arcs in the vertical plane on either side of a reference base wherein said longitudinal axis of said housing member is disposed horizontal to ground,

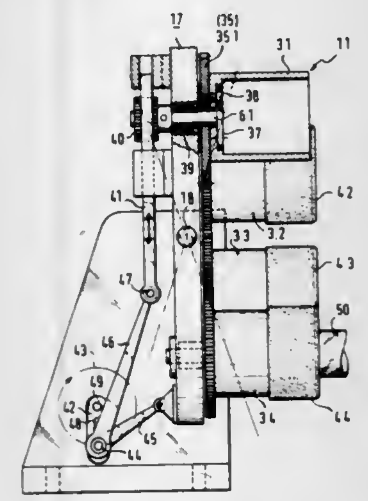

means for rotatably displacing said housing member and contained culture vessel through a predetermined arc about said longitudinal axis in alternating clockwise and counterclockwise directions simultaneous with said pivotal displacement thereof.

4,373,030

POLYCRYSTALLINE TRANSLUCENT ALUMINA SINTERED BODY, A METHOD FOR PRODUCING THE SAME AND A HIGH PRESSURE VAPOR DISCHARGE LAMP OBTAINED BY USING SAID SINTERED BODY

Masayuki Kaneno, Tokoname, and Takehiro Kajihara, Komaki, both of Japan, assignors to NGK Insulators, Ltd., Nagoya, Japan

Filed May 5, 1981, Ser. No. 260,758

Claims priority, application Japan, May 15, 1980, 55/63312

Int. Cl.^{3} H01J *17/16;* **C04B** *35/10, 35/50*

U.S. Cl. 501—152 **2 Claims**

1. A polycrystalline translucent alumina sintered body in which the content of MgO is 0.001–0.04% by weight, the content of each of La_2O_3 and Y_2O_3 is 0.001–0.01% by weight, a weight ratio of $MgO/La_2O_3+Y_2O_3$ is 0.5-2, and an in-line transmission is more than 40%.

4,373,031

SYNTHESIS OF ANION EXCHANGE POLYMERS EMPLOYING DITERTIARY AMINES

Warren A. Waite, Burlington, Mass., assignor to Ionics, Incorporated, Watertown, Mass.

Filed Sep. 25, 1980, Ser. No. 190,787

Int. Cl.^{3} B01J *41/04*

U.S. Cl. 521—32 **9 Claims**

1. An ion-exchange, cross-linked, polymeric structure comprised essentially of a plurality of recurring units of the formula:

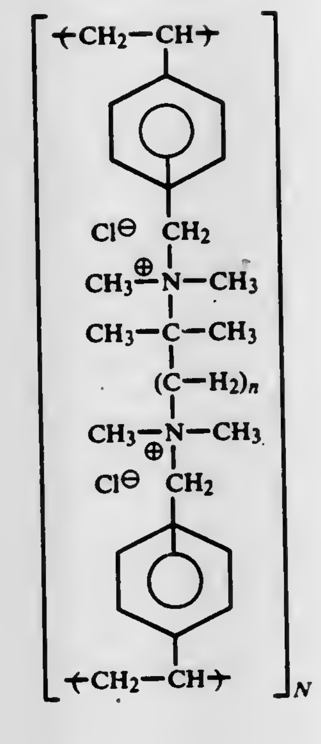

wherein n is 1.

4,373,032

METAL SALTS OF POLYACETYLENIC COMPOUNDS AND USES THEREOF AS ION EXCHANGE AND THERMOCHROMIC POLYMERS

Anthony F. Preziosi, Ledgewood; Gordhanbhai N. Patel, Morris Plains; Robert G. Denkewalter, Westfield, and Ray H. Baughman, Morris Plains, all of N.J., assignors to Allied Corporation, Morris Township, Morris County, N.J.

Filed Jun. 16, 1980, Ser. No. 159,741

Int. Cl.^{3} C08F *38/02;* **B01J** *39/20;* **C08F** *2/46*

U.S. Cl. 521—38 **12 Claims**

1. A polymeric compound prepared by the 1,4 addition of a diacetylenic monomer of the formula $[R(C\equiv C)_a(CH_2)_b(C\equiv C)_{b-1}]_2$ wherein a is 1 or 2 and b is 0 when a is 1; b is 0, 1, or 2 when a is 2 and (b−1) is taken as zero whenever b is zero; wherein R is selected from the group consisting of (I): $-(CH_2)_nO(C{=}O)NHCH_2CO_2M$, n being an integer from 1 to 10 and M representing an alkali metal or hydrogen; and (II): $-(CH_2)_{n'}CO_2M'$, n' being an integer from 0 to 9 and M' being an alkali metal with the proviso that when a is 1, n' is an integer from 0 to 4.

4,373,033

BLENDED PLASTOMERIC AND ELASTOMERIC RUBBER LATEX SPONGE

Ramesh K. Gupta, Toronto, Canada, assignor to Clarex Manufacturing Limited, Weston, Canada

Continuation of Ser. No. 171,910, Jul. 21, 1980, abandoned, which is a continuation of Ser. No. 935,231, Aug. 21, 1978, abandoned. This application Aug. 3, 1981, Ser. No. 289,214

Claims priority, application Canada, Apr. 11, 1978, 300917

Int. Cl.^{3} C08V *9/30*

U.S. Cl. 521—70 **10 Claims**

1. A frothed sponge rubber having a density between 2 and 20 pounds per cubic foot of blended natural and synthetic elastomeric latices and synthetic plastomeric latex characterised in containing more than 5 parts by weight styrene on a dry solids weight basis and in exhibiting high compressive deflection of more than about 1 psi and low compressive set of less than about 20% which comprises, by weight:
about 90–50 parts of base elastomeric latex solids selected from the group consisting of (1) homopolymers of butadiene; (2) homopolymers of isoprene; (3) copolymers of butadiene and styrene having less styrene content than butadiene content; (4) copolymers of butadiene and acrylonitrile; (5) copolymers of isoprene and styrene; (6) copolymers of butadiene, styrene and an unsaturated carboxylic acid; (7) homopolymers of chloroprene; and (8) natural rubber;
about 5–25 parts of augmenting plastomeric latex solids, selected from the group consisting of styrene-butadiene copolymers having a styrene content of at least 70% by weight, acrylic latices and vinyl latices, and exhibiting stiffening as defined under ASTM D 833-65T;
and about 5–25 parts of augmenting elastomeric latex solids, the augmenting elastomeric solids being chemically different from the base elastomeric latex solids and being elastomers within the definition of ASTM D 833-65T when cured, at least one of said base elastomeric latex solids and said augmenting elastomeric latex solids containing natural rubber latex,
wherein said frothed sponge rubber is produced by a no-gel method.

4,373,034

MODIFICATION OF POLYOLS WITH EPOXY RESINS FOR USE IN FLEXIBLE POLYURETHANE FOAMS

George P. Speranza; Michael Cuscurida, and Robert L. Zimmerman, all of Austin, Tex., assignors to Texaco Inc., White Plains, N.Y.

Division of Ser. No. 183,543, Sep. 2, 1980, Pat. No. 4,316,991. This application Jul. 27, 1981, Ser. No. 286,786

Int. Cl.^{3} C08G *18/14, 18/48*

U.S. Cl. 521—177 **12 Claims**

1. A method for producing a flexible polyrethane foam which comprises:
(a) making a modified polyol by reacting an initiator having an active hydrogen functionality of from 3 to 4, one or more alkylene oxides and an epoxy resin in such a manner that the epoxy resin is added internally along the length of the polyol chain, and
(b) reacting said modified polyol with an organic polyisocyanate and one or more suitable foam catalysts in the presence of a blowing agent.

4,373,035

ISOTONIC MONOMER FORMULATIONS

Rafael L. Bowen, Gaithersburg, Md., assignor to American Dental Association Health Foundation, Washington, D.C.

Filed Jun. 1, 1981, Ser. No. 269,067

Int. Cl.^{3} C08L *33/14*

U.S. Cl. 523—113 **20 Claims**

1. A composition of matter comprising a solution, substantially isotonic with normal physiological saline solution, of water in water-stable ethylenically unsaturated monomers.

4,373,036

DENTURE FIXATIVE COMPOSITION

Tiang-Shing Chang, Westfield; Lucy J. Zientek, Bayonne; Arthur Viningauz, Irvington, and Marcy L. Scheps, Perth Amboy, all of N.J., assignors to Block Drug Company, Inc., Jersey City, N.J.

Filed Dec. 21, 1981, Ser. No. 332,890

Int. Cl.^{3} C09J *3/04*

U.S. Cl. 523—120 **16 Claims**

1. A denture fixative composition comprising a dentally acceptable excipient and an effective fixative amount of a fixative mixture comprising hydroxypropylcellulose and (a) polyacrylic acid partially neutralized by at least one dentally acceptable monovalent cation such that about 20–90% of the initial carboxy groups have been neutralized and 0–80% of the initial carboxy groups have been crosslinked by at least one dentally acceptable agent selected from the group consisting of divalent cations and polyhydroxy compounds, wherein a 1% aqueous solution of said polyacrylic acid has a pH of at least about 4.5, or a precursor combination of polyacrylic acid, neutralizing agent and crosslinking agent adapted to form said

polyacrylic acid in an aqueous environment; (b) partially neutralized lower alkyl vinyl ether-maleic acid or anhydride copolymer, which has been partially neutralized by at least one dentally acceptable monovalent cation and 0–50% of the initial carboxy groups have been crosslinked by at least one dentally acceptable agent selected from the group consisting of divalent cations and polyhydroxy compounds such that up to about 90% of the total number of initial carboxyl groups have been neutralized or crosslinked, wherein a 1% aqueous solution of said neutralized copolymer has a pH of at least about 4.5, or a precursor combination of said copolymer, neutralizing agent and crosslinking agent adapted to form said partially neutralized copolymer in aqueous environment; (c) polyethylene oxide; or (d) a combination of (c) with (a) or (b).

4,373,037

ASBESTOS-FREE FRICTION MATERIAL INCORPORATING ATTAPULGITE CLAY

Frank J. Washabaugh, Titusville, N.J., assignor to Engelhard Corporation, Edison, N.J.

Filed May 29, 1981, Ser. No. 268,510

Int. Cl.³ C08L *61/00*

U.S. Cl. 523—155 **9 Claims**

1. A friction material composition suitable for molded friction pads comprising a thermosetting binder, a non-asbestos fibrous material, particles of heat-treated palygorskite clay, said clay having a volatile matter content below about 5% on a free-moisture-free basis and a carbonate content of not more than about 5% CO_2 by weight on a free-moisture-free basis, and additional conventional fillers and additives, said composition being substantially free from asbestos and said palygorskite clay being present in amount sufficient to provide acceptable wear and high temperature friction properties.

4,373,038

ASBESTOS-FREE FRICTION MATERIAL

Klaus Moraw, Duisburg, and Hans-Günther Paul, both of Duisberg, Fed. Rep. of Germany, assignors to Rutgerswerke Aktiengesellschaft, Frankfurt am Main, Fed. Rep. of Germany

Filed Oct. 1, 1981, Ser. No. 307,628

Claims priority, application Fed. Rep. of Germany, Oct. 16, 1980, 3039089; Oct. 21, 1980, 3039607

Int. Cl.³ C08L *9/06, 61/06, 63/00*

U.S. Cl. 523—156 **9 Claims**

1. An asbestos-free friction material comprising 5 to 25% by weight of a hardenable binder or binder mixture, 1 to 70% by weight of a reinforcing fibrous material and conventional additives, the said reinforcing material consisting essentially of 2.5 to 12% by weight of aramide fibers, 6 to 25% by weight of mineral fibers and 16 to 36% by weight of steel fibers and optionally 5 to 20% by weight of powdered mica.

4,373,039

ELASTOMER COATED FILLERS AND COMPOSITES THEREOF COMPRISING AT LEAST 60% BY WT. OF A HYDRATED FILLER AND AN ELASTOMER CONTAINING AN ACID SUBSTITUENT

William A. Mueller, Glendale; John D. Ingham, La Crescenta, and William W. Reilly, Altadena, all of Calif., assignors to The United States of America as represented by the Administrator of the National Aeronautics and Space Administration, Washington, D.C.

Filed Jun. 11, 1980, Ser. No. 158,530

Int. Cl.³ C08K *5/17;* **C08L** *29/04, 31/02*

U.S. Cl. 523—205 **9 Claims**

1. A fire retardant composite comprising:

matrix resin containing a dispersion of:

at least 60% by weight of basic, hydrated, particulate, mineral filler capable of evolving water at a temperature above 200° C. having an immobilized and insoluble coating of 1 to 20% by weight based on the filler of an elastomer compatible with the matrix resin having a lower modulus than the matrix resin and the elastomer contains acidic groups ionically cross-linking with the basic filler particles to attach the elastomer coating to the surface of the filler particles.

9. A fire retardant composite comprising:

matrix resin consisting essentially of ethylene-acrylic acid copolymer containing 1 to 10% by weight vinyl acetate and said matrix resin containing a dispersion of:

at least 60% by weight of particulate, mineral, hydrated filler capable of evolving water at a temperature above 200° C. having a coating of 1 to 20% by weight of an elastomer containing an acidic substituent compatible with the matrix resin.

4,373,040

EPOXY MOLDING COMPOUND

Richard B. Allen, Dalton, Mass., assignor to General Electric Company, Pittsfield, Mass.

Filed Jun. 5, 1981, Ser. No. 270,914

Int. Cl.³ C08L *63/00*

U.S. Cl. 523—466 **7 Claims**

1. A molding compound comprising:

(a) from about 5 to 90% by weight of curable epoxy resin;

(b) from about 0.01 to 10% by weight of an aromatic onium salt of the formula:

$[R_aX]_b{}^{+}[C]^{-b}$

wherein each R is a monovalent organic aromatic radical; X is selected from the group consisting of sulfur and iodine; C is a lewis acid polymerization catalyst precursor; a equals the absolute value of the valence number of (X minus 1); and b equals the absolute value of the valence number of C;

(c) from about 0.01 to 10% by weight of peroxide compound effective to activate said catalyst; and

(d) from about 10 to 95% by weight of filler, based on the total weight of the composition.

4,373,041

RUBBER COMPOSITIONS CONTAINING SILICA AND TACKIFIER RESINS

Jerold D. Wood, and Carl J. Stacy, both of Bartlesville, Okla., assignors to Phillips Petroleum Company, Bartlesville, Okla.

Filed Oct. 29, 1981, Ser. No. 316,163

Int. Cl.³ C08L *93/00, 47/00*

U.S. Cl. 524—77 **22 Claims**

1. A silica-containing vulcanizable composition comprising

(a) a vulcanizable natural or synthetic rubber,

(b) a siliceous filler in an amount ranging from about 5 to about 150 parts by weight per hundred parts by weight of rubber (phr), and

(c) at least one tackifying resin selected from rosin esters, hydrogenated rosin esters, and terpene resins in a minor but effective amount sufficient to increase the bonding of said siliceous filler to said rubber and improve the physical properties of the resulting rubber product; including tensile, hysteresis, and the like.

4,373,042

N,N-DI-(HYDROXY-PHENYL) DERIVATIVES OF PIPERAZINE AND USE THEREOF AS STABILIZERS FOR POLYMERS

Francesco Gratani, Sesto San Giovanni; Giuseppe Nelli, Milan; Piero Di Battista, San Donato Milanese, and Osvaldo Cicchetti, Milan, all of Italy, assignors to Montedison S.p.A., Milan, Italy

Filed May 9, 1980, Ser. No. 148,389

Claims priority, application Italy, May 10, 1979, 22515 A/79

Int. Cl.³ C07D *241/04;* **C08K** *5/34*

U.S. Cl. 524—100 **12 Claims**

1. A composition comprising a thermo-plastic synthetic

polymer, stabilized to oxidation, to heat and to sunlight, said composition containing incorporated therein, in an amount sufficient to prevent any degradation of the polymer, a N,N'-di-(hydroxy-phenyl) derivative of piperazine having the following formula (I):

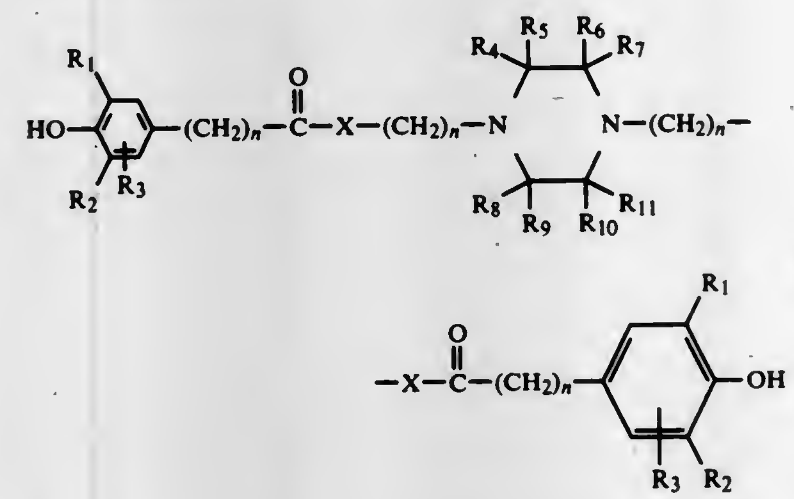

in which:

R_1 and R_2, which may be the same or different, are each hydrogen, an alkyl radical having 1 to 8 carbon atoms, an aralkyl radical having 7 to 9 carbon atoms or a cyclo-alkyl radical having 5 to 8 carbon atoms;

R_3 is hydrogen or an alkyl radical having 1 to 8 carbon atoms;

R_4, R_5, R_6, R_7, R_8, R_9, R_{10} and R_{11}, which may be the same or different are each hydrogen or an alkyl radical having 1 to 6 carbon atoms, at least two thereof being different from hydrogen, or R_4 and R_5, R_6 and R_7, R_8 and R_9, R_{10} and R_{11} together can form a cycloalkyl radical having 5 to 8 carbon atoms;

n is an integer from 1 to 12; and

X is oxygen.

4,373,043

COLOR DEEPENING AGENT

Kazuhisa Yagi, Wakayama; Sho Suzuki, Funabashi, and Norihiko Nakashima, Wakayama, all of Japan, assignors to Kao Soap Co., Ltd., Tokyo, Japan

Filed Jul. 22, 1981, Ser. No. 285,697

Claims priority, application Japan, Feb. 13, 1981, 56/20325

Int. Cl.³ C08K *5/54, 5/53, 5/42, 5/09*

U.S. Cl. 524—130 **23 Claims**

1. A color deepening agent comprising (a) an aqueous resin composition obtained by radical emulsion polymerization of a monomer having a polymerizable unsaturated bond, in the presence of an anionic or a cationic polyurethane emulsion in which the polyurethane contains thermosetting reactive groups capable of forming a cross-linked structure under heating, the refractive index of a dry, heat-treated film of said aqueous resin composition being lower than 1.50, and (b) at least one material selected from the group consisting of polysiloxanes, silane coupling agents, silica, silylating agents, fluorine resins and surface active agents containing a perfluoroalkyl group.

4,373,044

FLAME-PROOFED PLASTICS MOULDING COMPOUNDS

Lothar Buxbaum, Lindenfels, and Franz Breitenfellner, Bensheim, both of Fed. Rep. of Germany, assignors to Ciba-Geigy Corporation, Ardsley, N.Y.

Filed Nov. 19, 1980, Ser. No. 208,365

Claims priority, application Switzerland, Nov. 28, 1979, 10579/79

Int. Cl.³ C08K *3/22, 3/34, 5/52, 5/53*

U.S. Cl. 524—132 **6 Claims**

1. A thermoplastic polyester moulding compound, which has been flameproofed with one or more organic chlorine- or bromine-containing compounds, which comprises

(a) a thermoplastic polyester, and

(b) from 0.1 to 10%, by weight based on said moulding compound, of one or more aerosols selected from the group consisting of the highly dispersed silicates, highly dispersed alumina, and highly dispersed titanium dioxide incorporated in (a), and wherein the aerosol has an internal surface area of at least 50 m^2/g.

4,373,045

POLYPHENYLENE ETHER MOLDING COMPOSITIONS THAT INCLUDE AN ALKENYL AROMATIC RESIN, AN ETHYLENE PROPYLENE RUBBER AND A TRIARYL PHOSPHATE

Glenn D. Cooper, Delmar, and Gim F. Lee, Jr., Albany, both of N.Y., assignors to General Electric Company, Pittsfield, Mass.

Filed Apr. 15, 1980, Ser. No. 140,579

Int. Cl.³ C08K *5/52;* **C08L** *71/04*

U.S. Cl. 524—141 **19 Claims**

1. A thermoplastic molding composition which consists essentially of:

(a) a polyphenylene ether resin;

(b) an ethylene propylene rubber; and

(c) a component selected from the group consisting of:

(i) a triaryl phosphate;

(ii) an EPDM modified alkenyl aromatic resin; and

(iii) a combination of (i) and (ii).

4,373,046

FLAME-RETARDANT AND RADIATION-RESISTANT POLYMER COMPOSITION AND A RESIN MOLDED PRODUCT PREPARED THEREFROM

Miyuki Hagiwara, Maebashi, and Yousuke Morita, Takasaki, both of Japan, assignors to Japan Atomic Energy Research Institute, Tokyo, Japan

Filed Feb. 10, 1981, Ser. No. 233,134

Claims priority, application Japan, Mar. 3, 1980, 55-26383

Int. Cl.³ C08K *5/03;* **C08L** *57/08*

U.S. Cl. 524—285 **19 Claims**

1. A flame-retardant and radiation-resistant polymer composition comprising a polymer and a halogenated acenaphthylene condensate having a structural unit of the formula (I) or (II):

(I)

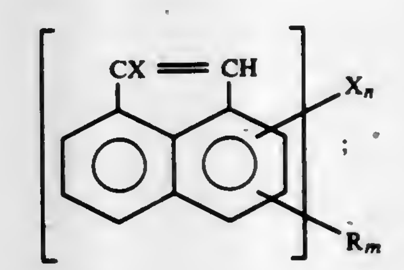

(II)

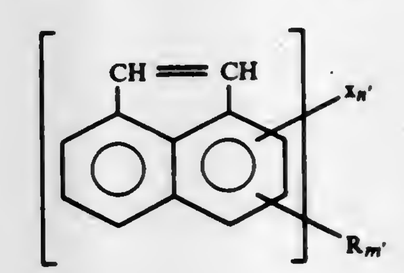

wherein X is chlorine or bromine, n and n' are each an integer of 2 to 6, R is a substituent selected from the group consisting of alkyl, alkoxy and alkylester of 1–4 carbons; m and m' are each an integer of 0 to 4, n (or n')+m (or m')≦6, and when m or m' is 2 or more, each R may be the same or different.

4,373,047
FLAME RETARDANT THERMOPLASTIC COMPOSITIONS WITH REDUCED BLOOM
Stuart C. Cohen, and Ronald L. Dieck, both of Evansville, Ind., assignors to General Electric Company, Pittsfield, Mass.
Continuation of Ser. No. 11,680, Feb. 12, 1979, abandoned. This application Nov. 26, 1980, Ser. No. 210,866
Int. Cl.³ C08L *23/06*
U.S. Cl. 524—371 **12 Claims**

1. In a flame retardant thermoplastic composition consisting essentially of:
(a) a normally flammable high molecular weight polyester;
(b) a flame retardant amount of decabromodiphenylether; and
(c) an effective amount of an organic or in-organic flame retardant synergist compound,

the improvement which consists of including, as component (d), an effective amount of an olefin polymer, an olefin copolymer or a mixture thereof whereby a composition is obtained from which the decabromodiphenyl ether flame retardant shows a reduced tendency to bloom or plate out after molding and thermally aging the molded articles.

4,373,048
HIGH VOLTAGE FLAME RETARDANT EPOM INSULATING COMPOSITIONS
Paul C. Schubert, and Anil C. Thakrar, both of Camp Hill, Pa., assignors to AMP Incorporated, Harrisburg, Pa.
Continuation-in-part of Ser. No. 142,277, Apr. 21, 1980, abandoned. This application Jul. 27, 1981, Ser. No. 286,806
Int. Cl.³ C08K *5/06, 3/38, 3/22*
U.S. Cl. 524—371 **24 Claims**

1. An ethylene propylene diene terpolymer composition suitable for use as an insulator in high voltage electrical connector applications, said composition comprising an ethylene propylene diene terpolymer, reinforcement fillers, a curing agent and a synergistic mixture of fire retardant agents and flow improvers comprising at least (1) a brominated organic flame retardant, (2) a hydrated alumina flame retardant, (3) an antimony oxide synergist, and (4) a flow improver, which synergistic mixture increases the flow of the composition during molding, increases internal lubrication, and provides better release and non-sticking characteristics,
said composition being characterized by good flame retardancy, tensile strength, elongation and Shore "A" Hardness with good flow during molding.

4,373,049
FLAME-RETARDANT POLYAMIDE COMPOSITIONS
Paul N. Richardson, Wilmington, Del., assignor to E. I. Du Pont de Nemours and Company, Wilmington, Del.
Filed Nov. 5, 1981, Ser. No. 318,349
Int. Cl.³ C08K *5/06*
U.S. Cl. 524—375 **6 Claims**

1. A reinforced, flame-retardant composition consisting of
(a) about 37–80 weight percent of composition of a polyamide of film-forming molecular weight selected from nylon 66 or nylon 66/6 copolymer;
(b) about 22–34 weight percent of composition of a brominated polystyrene having an average molecular weight of at least about 30,000 and containing about 55–70% bromine by weight;
(c) about 5–10 weight percent antimony oxide;
(d) about 1–3 weight percent of composition of a non-ionic surfactant using the formula

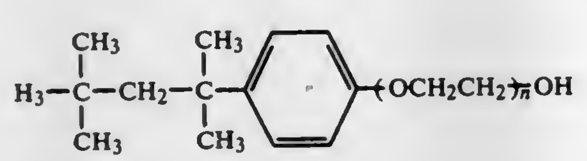

wherein n is a cardinal number of from 10–40, or

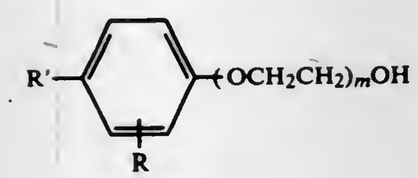

wherein m is a cardinal number of from 8–15 and R' is alkyl of 9–12 carbon atoms, and R is C_9H_{19}— or H—
the percent amounts of components (a) through (d) totaling 100%.

4,373,050
PROCESS AND COMPOSITION FOR COATING METALS
Lester Steinbrecher, Southampton, and Wilbur S. Hall, Plymouth Meeting, both of Pa., assignors to Amchem Products, Inc., Ambler, Pa.
Continuation of Ser. No. 904,019, May 8, 1978, abandoned, which is a division of Ser. No. 499,039, Aug. 20, 1974, Pat. No. 4,104,424, which is a continuation-in-part of Ser. No. 113,685, Feb. 8, 1971, abandoned, which is a division of Ser. No. 791,801, Jan. 16, 1969, Pat. No. 3,585,084, which is a continuation-in-part of Ser. No. 554,336, Jun. 1, 1966, abandoned. This application Jun. 9, 1980, Ser. No. 157,526
The portion of the term of this patent subsequent to Jun. 15, 1988, has been disclaimed.
Int. Cl.³ C08L *9/04, 9/08, 27/06, 75/04*
U.S. Cl. 524—405 **22 Claims**

1. An acidic aqueous coating composition having a pH of about 1.6 to about 3.8 for use in coating a ferriferous surface comprising an acidic aqueous solution of at least about 0.01 oxidizing equivalent/liter of an oxidizing agent which contains oxygen and which has a positive reduction potential greater than that of hydrogen, and about 5 to about 550 g/l of solid particles of a coating-forming polymeric resinous material dispersed throughout the composition, said composition being effective to chemically attack, in the absence of an external electrical potential, a ferriferous surface immersed therein to dissolve therefrom metal in an amount of at least about 25 to about 60 mg/sq. ft. within the first minute of immersion to release ions of said metal and sufficient to cause said resinous material to deposit on said ferriferous surface in the form of an initially adherent coating which increases in weight or thickness the longer the time said surface is immersed in said composition.

4,373,051
POLYVINYL CHLORIDE CONTAINING VINYL ACETATE-ETHYLENE COPOLYMER AS IMPACT STRENGTH MODIFIER
Leroy J. Memering, Cincinnati, Ohio, assignor to National Distillers & Chemical Corp., New York, N.Y.
Filed Jan. 27, 1981, Ser. No. 228,830
Int. Cl.³ C08K *3/18*
U.S. Cl. 524—427 **10 Claims**

1. A blend of (a) polyvinyl chloride and (b) a vinyl acetate-ethylene copolymer which has been pre-blended with an inert inorganic filler having an average particle size within the range of from about 0.01 microns to about 3 microns, in an amount such that said blend contains from about 1 to about 10 parts by weight of vinyl acetate-ethylene copolymer per 100 parts by weight of polyvinyl chloride and the weight ratio of said vinyl acetate-ethylene copolymer to filler is from about 1:0.5 to about 1:10, said vinyl acetate-ethylene copolymer having a ratio of from about 60:40 to about 25:75 of ethylene to vinyl acetate, whereby said blend has significantly increased impact strength.

4,373,052
POLYPHENYLENE ETHER COMPOSITIONS
Visvaldis Abolins, and Bruce A. Luxon, both of Delmar, N.Y., assignors to General Electric Company, Pittsfield, Mass.
Filed Sep. 23, 1981, Ser. No. 304,947
Int. Cl.³ C08K *3/34*
U.S. Cl. 524—451 **13 Claims**

1. A thermoplastic resin composition which comprises an intimate admixture of polyphenylene ether resin with an amount of talc filler effective to provide an UL arc tracking rate of less than 1 inch/minute.

4,373,053
COLOR DEEPENING AGENT
Toshio Sato, Wakayama; Sho Suzuki, and Hidemasa Ohmura, both of Funabashi, all of Japan, assignors to Kao Soap Co., Ltd., Tokyo, Japan
Filed Jul. 21, 1981, Ser. No. 285,703
Claims priority, application Japan, Jul. 29, 1980, 55/103904
Int. Cl.³ C08K *5/16*
U.S. Cl. 524—457 **13 Claims**

1. A color deepening agent comprising an aqueous resin composition obtained by radical emulsion polymerization of a monomer having a polymerizable unsaturated bond, in the presence of an anionic or a cationic polyurethane emulsion in which the polyurethane contains thermosetting reactive groups capable of forming a cross-linked structure under heating, the refractive index of a dry, heat-treated film of said aqueous resin composition being lower than 1.50.

4,373,054
DISPERSION PROCESS AND PRODUCT
David V. Gibson, 29 Sutherland Rd., Armadale, Victoria, 3143; Garry M. McKay, 1399 Dandenong Rd., Chadstone, Victoria, 3148, and John E. Swalwell, 9 Amelia Crescent, East Doncaster, Victoria, 3109, all of Australia
Filed Jul. 6, 1981, Ser. No. 280,314
Claims priority, application Australia, Jul. 3, 1980, PE4360; Jun. 16, 1981, PE9302
Int. Cl.³ C08L *61/20*
U.S. Cl. 524—460 **15 Claims**

1. A process of preparing an aqueous dispersion of particles of film-forming polymer suitable for use in a cathodic electrodeposition process, the said process consisting of the following steps in combination:
(1) Pre-formed polymer or polymer plasticiser dissolved in polymerisable α, β-ethylenically unsaturated monomer which has a maximum solubility in water of 10% by weight at 25° C. is stably dispersed in water in the presence of surface active agent; and
(2) unsaturated monomer in the dispersion is polymerised to form a particulate dispersion of film-forming polymer wherein the particles comprise blends of pre-formed polymer or polymer plasticizer and polymer formed in situ from the unsaturated monomer;

characterised in that the stable dispersion in water prior to the initiation of polymerisation has a pH of less than 10 but when subjected to the pH stability test described hereinunder becomes unstable at a pH of 10–11 and the surface active agent is a cationic surface active agent which has a hydrophilic-lipophilic balance (H.L.B. value) of at least 8.

2. A process of preparing an aqueous dispersion according to claim 1, characterised in that when five drops of the dispersion taken prior to the initiation of polymerisation are added to 10 g of de-ionised water, treated with 10^{-2} M potassium hydroxide solution to give a pH of 10–11 and allowed to stand for 10 hr at 25° C., a visible settling of polymer with the formation of a clear upper layer takes place in the sample under test.

4,373,055
IMPACT RESISTANT POLYPHENYLENE ETHER RESIN COMPOSITIONS CONTAINING RADIAL TELEBLOCK COPOLYMERS
William R. Haaf, Voorhesville; Arthur Katchman, Delmar, and Gim F. Lee, Jr., Albany, all of N.Y., assignors to General Electric Company, Pittsfield, Mass.
Continuation of Ser. No. 21,951, Mar. 19, 1979, abandoned, which is a continuation of Ser. No. 794,255, May 5, 1977, abandoned, which is a continuation of Ser. No. 671,344, Mar. 29, 1976, abandoned. This application Jul. 25, 1980, Ser. No. 172,265
Int. Cl.³ C08L *53/00*
U.S. Cl. 524—505 **13 Claims**

1. A thermoplastic molding composition which comprises an intimate admixture of:
(i) from about 10 to about 65 percent by weight of a polyphenylene ether resin;
(ii) from about 90 to about 35 percent weight of a styrene resin, and
(iii) from about 5 to about 25 percent by weight of a radial teleblock copolymer comprising a vinyl aromatic compound, a conjugated diene, and a coupling agent.

4,373,056
AQUEOUS ARTIFICIAL RESIN DISPERSIONS FREE OF EMULSIFYING AGENTS
Siegmund Besecke, Darmstadt; Herbert Fink, Bickenbach; Norbert Sutterlin, Ober-Ramstadt; Gerhard Markert, Ober-Ramstadt-Eiche; Gunter Schroder, Ober-Ramstadt, and Willi Tilch, Reinheim, all of Fed. Rep. of Germany, assignors to Rohm GmbH Chemische Fabrik, Darmstadt, Fed. Rep. of Germany
Filed Aug. 24, 1981, Ser. No. 295,544
Claims priority, application Fed. Rep. of Germany, Sep. 19, 1980, 3035375
Int. Cl.³ C08L *41/00*
U.S. Cl. 524—547 **12 Claims**

1. An aqueous artificial resin dispersion, comprising:
an aqueous phase free of low molecular weight, ionic emulsifying agents, and
a water-insoluble disperses phase formed from particles containing a copolymer comprising
(a) in substantial part a water-insoluble or slightly soluble first monomer selected from the group consisting of alkyl esters of acrylic or methacrylic acid, vinyl esters, and α-alkenylbenzenes and
(b) from 0.05 to 5% by weight based on said copolymer of a polymerizable emulsifying agent of the formula

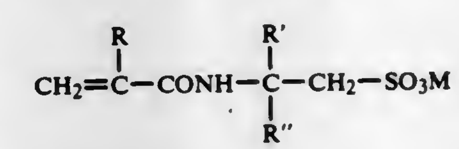

wherein R represents hydrogen or methyl,
R' represents hydrogen or an alkyl radical with 1 to 12 C-atoms,
R" represents an alkyl radical with 7 to 20 C-atoms, and
M represents a proton, an alkali metal ion, or an ammonium ion.

4,373,057
PROCESS FOR MAKING CURABLE ADHESIVE POLYURETHANE PRODUCTS
James A. Hammond, Redlands, Calif., assignor to Colamco, Inc., Columbus, Ohio
Filed Sep. 14, 1981, Ser. No. 301,838
Int. Cl.³ C07C *79/46;* **C08G** *18/08;* **C08K** *5/09*
U.S. Cl. 524—700 **20 Claims**

1. A polyurethane product, characterized by a natural ab-

sence of polymerization catalyst residue, produced by a one step process consisting essentially of:

(1) the reaction of
  (a) isocyanate compound selected from the class consisting of aliphatic, aromatic and cycloaliphatic isocyanates having at least two isocyanate groups; and
  (b) diol/polyol compounds having at least two sterically unhindered hydroxyl groups;
  (c) said reactants 1*a* and 1*b* being simultaneously present in a stoichiometric excess of said isocyanate groups of about 1–25%;

(2) in the absence of polymerization catalyst;

(3)
  (a) said reactants being initially intermingled in the ambient room temperature range of about 65°–86° F.; and
  (b) reacted with intermingling in the absence of externally added heat, for the time needed to obtain a product characterized as homogeneous, non-separating viscous liquid ranging to semiliquid, with adhesive properties.

4,373,058

POLYMER CONCRETE COMPRISING FURFURYL ALCOHOL RESIN

Lowell C. Horton, Pensacola Beach, Fla., assignor to Joe G. Hosner, Pensacola, Fla.

Filed Mar. 17, 1981, Ser. No. 244,811
Int. Cl.[3] C08L 95/00; C08K 3/36, 3/34
U.S. Cl. 524—705 10 Claims

1. A polymer concrete composition comprising by weight about 40% to about 70% coarse mineral aggregate ranging in size from about 1½ inches to about 0.187 inch, about 20% to 55% fine mineral aggregate ranging from about 0.187 inch to about 0.0059 inch; about 2% to about 15% silica flour; about 8% to about 12% furfuryl alcohol monomer polymerized in situ by the addition of an acid catalyst contained in amounts of about 8% to about 12% by weight of said monomer, said mineral aggregates having a pH less than about 7.0, and the moisture content of the mineral aggregates being less than about 1% by weight.

4,373,059

PRE-CONDENSED, THERMOSETTING AQUEOUS VARNISH COATING AGENT AND ITS UTILIZATION FOR CATHODIC DEPOSITION UPON ELECTRICALLY CONDUCTING SURFACES

Hans-Peter Patzschke, and Armin Göbel, both of Wuppertal, Fed. Rep. of Germany, assignors to Herberts Gesellschaft mit Beschrankter Haftung, Wuppertal, Fed. Rep. of Germany

Filed Sep. 2, 1980, Ser. No. 183,040
Claims priority, application Fed. Rep. of Germany, Sep. 8, 1979, 2936356
Int. Cl.[3] C08L 63/02, 77/06, 67/02
U.S. Cl. 524—761 17 Claims

1. A binding agent which is water-dilutable upon protonization with acids, for a pre-condensed, thermosetting aqueous lacquer coating material, said binding agent comprising:

(a) a water-dilutable pre-condensation product having a mean molecular weight (Mn) of about 800 to 15,000 obtainable by heating a first component including a quantity of 55% to 95% by weight, based on the total quantity of the binding agent of an organic synthetic-resin binder containing amino groups and having an amine number of about 30 to 150, and a second component including a quantity of 5% to 45% by weight of a cross-linking agent containing terminal carboxyl groups, the latter being esterified with mono-alcohols in such proportion as will cause the pre-condensate to have an ester number of at least about 30, the ester groups being largely stable in a neutral aqueous medium yet being reactive towards primary and/or secondary amino groups of the synthetic-resin binder in a basic medium at temperatures above about 140° C. to cross link the binding agent by amidation,

(b) said first and second components being heated to temperatures of between 50° and 200° C. for such length of time that, after protonization with acid and dilution with water for the purpose of preparing a lacquer, it shows no precipitation phenomena.

4,373,060

SILICONE COATING FOR UNPRIMED PLASTIC SUBSTRATE AND COATED ARTICLES

Ta-Yen Ching, Schenectady, N.Y., assignor to General Electric Company, Waterford, N.Y.

Filed May 30, 1980, Ser. No. 154,623
Int. Cl.[3] C08K 3/20; C08L 83/06
U.S. Cl. 524—767 12 Claims

1. A method for making an improved coating composition which comprises making an aqueous cohydrolyzate adapted for adhesion to a plastic substrate without a primer which comprises cohydrolyzing at a temperature of at least 10° C. for a period of at least 2 hours and at a pH of 6.6 to 7.8 or 3.8 to 5.7 prior to addition of an ultraviolet light absorber,

(A) a dispersion of colloidal silica in an aqueous-organic solvent solution of a silanol of the formula $RSi(OH)_3$, at least 50 weight percent of the silanol being $CH_3Si(OH)_3$, wherein said organic solvent comprises an aliphatic alcohol; and

(B) a stabilizing amount effective to prevent discoloration of the substrate and promote primerless adhesion to said substrate of an alkoxysilane functionalized aromatic ultraviolet absorbing compound selected from the class consisting of

(i)

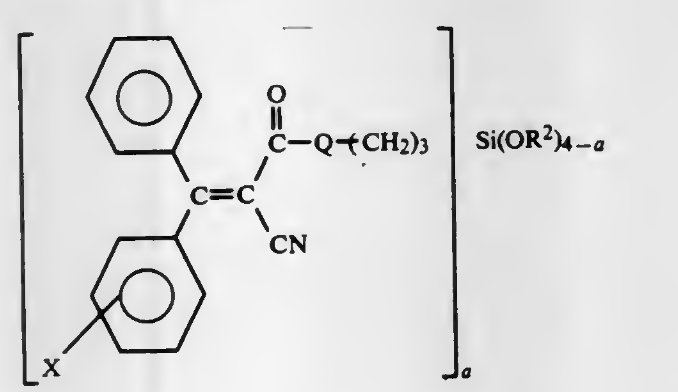

(ii)

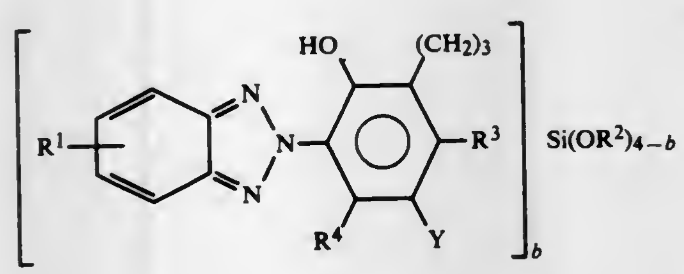

(iii)

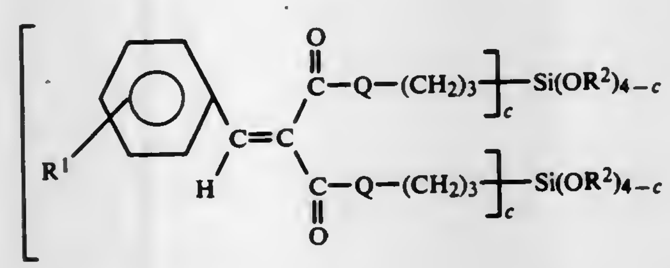

and mixtures thereof, (iv)

where (A) contains 10 to 40% solids consisting essentially of 10 to 70 weight percent of colloidal silica and 30 to 90 weight percent of the partial condensate, R is selected from the group consisting of $C_{(1-3)}$ alkyl radicals and $C_{(6-13)}$ aryl radicals, R^1 is selected from the class consisting of hydrogen, C_1–C_8 alkoxy, carboxy, halogen, hydroxy, amino, carbethoxy and —Q—$CH_2)_3Si(OR^2)$, X is R^1 or

$$-\overset{O}{\overset{\|}{C}}-Q-(CH_2)_3Si(OR^2)_3,$$

is —NH— or —O—, R^2 is C_1–C_8 alkyl, R^3 is a member selected from the class consisting of hydrogen, halogen, hydroxy, C_1–C_8 alkyl and C_1–C_8 alkoxy, R^4 is a member selected from hydrogen, C_1–C_8 alkyl, C_1–C_8 alkoxy and halogen, Y is R^4 or —$(CH_2)_3Si(OR^2)_3$, and a, b, and c are integers equal to 1 to 3 inclusive.

5. A coating composition adapted for use as a top coat for thermoplastic substrates, without the need to use a primer layer whereby there are produced composites having at least one coated abrasion resistant and UV stabilized surface, said coating composition comprising by weight

(C) 55 to 90% of a solvent consisting essentially of water and a $C_{(1-8)}$ alkanol and

(D) 10 to 45% of a cohydrolyzate which comprises organopolysiloxane and having from about 25–50 mole percent of SiO_2 units chemically combined with from about 40–75 mole percent of $RSiO_{1.5}$ units and from about 0 to 10 mole percent of $(R)_2(SiO)$ units and from about 0.5 to 5 mole percent of $(Z)_dSiO_{(4-d)/2}$ or $(Z')=SiO_{1.5}$, where the total chemically combined units are 100 mole percent, where d is an integer having a value of 1–3 inclusive and Z is a memer selected from the class consisting of

(i)

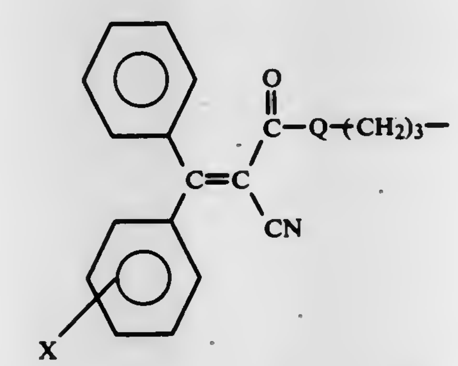

(ii)

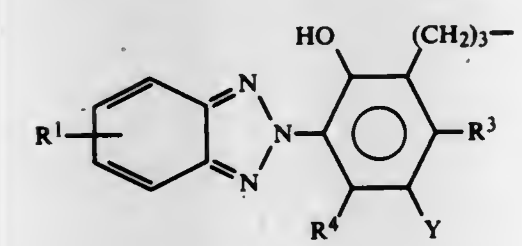

(iii)

Z' is

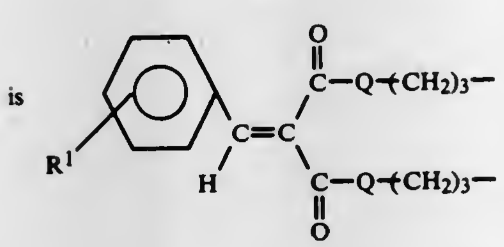

where R^1 is selected from the class consisting of hydrogen, C_1–C_8 alkoxy, carboxy, halogen, hydroxy, amino, carbethoxy and —Q—$CH_2)_3Si(OR^2)_3$, X is R^1 or

$$-\overset{O}{\overset{\|}{C}}-Q-(CH_2)_3Si(OR^2)_3$$

Q is —NH— or —O—, R^2 is C_1–C_8 alkyl, R^3 is a member selected from the class consisting of hydrogen, halogen, hydroxy, C_1–C_8 alkyl and C_1–C_8 alkoxy, R^4 is a member selected from hydrogen, C_1–C_8 alkyl, C_1–C_8 alkoxy and halogen, and Y is R^4 or —$CH_2)_3Si(OR^2)_3$.

4,373,061

SILICONE COATING FOR UNPRIMED PLASTIC SUBSTRATE AND COATED ARTICLES

Ta-Yen Ching, Schenectady, N.Y., assignor to General Electric Company, Waterford, N.Y.

Filed May 30, 1980, Ser. No. 154,624
Int. Cl.[3] C08K 3/20; C08L 83/06
U.S. Cl. 524—767 11 Claims

1. A method for making an improved coating composition which comprises making an aqueous cohydrolyzate adapted for adhesion to a plastic substrate without a primer which comprises cohydrolyzing at a temperature of at least 10° C. for a period of at least 2 hours and at a pH of 6.6 to 7.8 or 3.8 to 5.7 prior to addition of an ultraviolet light absorber,

(A) a dispersion of colloidal silica in an aqueous-organic solvent solution of a silanol of the formula $RSi(OH)_3$, at least 50 weight percent of the silanol being $CH_3Si(OH)_3$, wherein said organic solvent comprises an aliphatic alcohol; and

(B) a stabilizing amount effective to prevent discoloration of the substrate and promote primerless adhesion to said substrate of an alkoxysilane functionalized aromatic ultraviolet absorbing compound of the formula

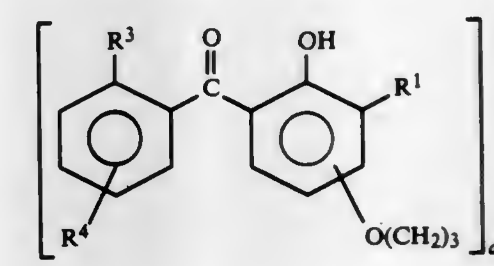

where (A) contains 10 to 40% solids consisting essentially of 10 to 70 weight percent of colloidal silica and 30 to 90 weight percent of the partial condensate, R is selected from the group consisting of $C_{(1-3)}$ alkyl radicals and $C_{(6-13)}$ aryl radical, wherein R^1 is hydrogen, C_1–C_8 alkyl or halogen, R^3 and R^4 are hydrogen, C_1–C_8 alkoxy, carboxy, halogen, hydroxy, amino, carbethoxy, or —Q—$(CH_2)_3Si(OR^2)_3$, Q is —NH— or —O—, R^2 is C_1–C_8 alkyl, and a is an integer equal to 1–3 inclusive.

5. A coating composition adapted for use as a top coat for thermoplastic substrates without the need to use a primer layer whereby there are produced composites having at least one coated abrasion resistant and UV stabilized surface, said coating composition comprising by weight

(C) 55 to 90% of a solvent consisting essentially of water and a $C_{(1-8)}$ alkanol and

(D) 10 to 45% of a cohydrolyzate which comprises organopolysiloxane and having from about 25–50 mole percent of SiO_2 units chemically combined with from about 40–75 mole percent of $RSiO_{1.5}$ units and from about 0 to 10 mole percent of $(R)_2(SiO)$ units and from about 0.5 to 5 mole percent of $(Z)_dSiO_{(4-d)}$, where the total chemically combined units are 100^2 mole percent, where d is an integer having a value of 1–3 inclusive and Z is of the formula

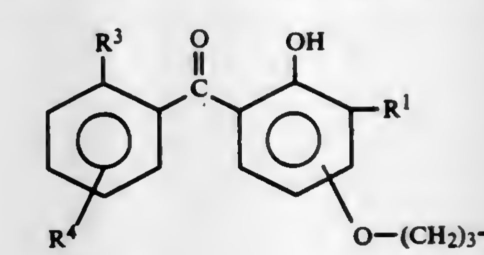

wherein R^1 is hydrogen, C_1–C_8 alkyl or halogen, R^3 and R^4 are hydrogen, C_1–C_8 alkoxy, carboxy, halogen, hydroxy, amino, carbethoxy or —Q—$(CH_2)_3Si(OR^2)_3$, Q is —NH— or —O— and R^2 is C_1–C_8 alkyl.

4,373,062

PHENOL-RESORCINOL-FORMALDEHYDE RESIN

Gordon E. Brown, 1960 W. 25th, Eugene, Oreg. 97405
Filed Apr. 20, 1981, Ser. No. 255,545
Int. Cl.³ C08L *61/14*

U.S. Cl. 524—841 **9 Claims**

1. The process of preparing an aqueous syrup containing reacted phenol and formaldehyde, and capable of reacting further to provide a hard solid, which process comprises:

reacting an aqueous mixture of phenol and formaldehyde containing a mol ratio of formaldehyde to phenol between 1.7 and 2.8 at a pH of 5.8 to 8.5 for a time-temperature period causing a phenol-formaldehyde polymer to be formed as signified by the appearance of a hydrophobe point upon dilution with water;

adjusting the total formaldehyde to phenol mol ratio to a ratio within the range of 2.1 and 2.8 to 1 if the total ratio is not already within said range and adding alkali metal hydroxide to provide a total mol ratio of alkali metal hydroxide to phenol between 0.10 and 0.38 to 1 and reacting the resulting mixture for a time-temperature period producing a maximum amount of combined formaldehyde to provide an aqueous syrup product which is heat curable to a hard solid.

4,373,063

ELASTOMERIC COMPOSITION

Hajime Sakano, Hirakata; Fumio Nakai, Kurita, and Yukio Tomari, Toyonaka, all of Japan, assignors to Sumitomo Naugatuck Co. Ltd., Osaka, Japan
Filed Apr. 24, 1981, Ser. No. 256,875
Claims priority, application Japan, Apr. 28, 1980, 55-56452; Jun. 20, 1980, 55-84137
Int. Cl.³ C08L *51/06, 53/00, 75/04, 67/00*

U.S. Cl. 525—64 **16 Claims**

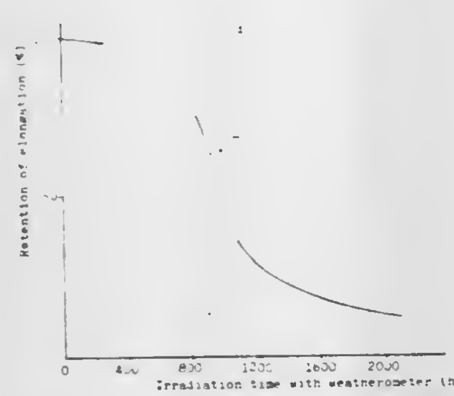

1. An elastomeric composition comprising

(A) a graft polymer of a rubbery copolymer consisting predominantly of ethylene-propylene with at least two groups of the monomers selected from at least one aromatic vinyl compound, at least one ethylenically unsaturated nitrile and at least one methacrylic acid ester, and

(B) a polymer selected from a thermoplastic polyurethane, an aromatic vinyl-conjugated diene block copolymer, a polyester elastomer and an olefinic elastomer, which is a partially crosslinked mixture of an ethylene-propylene rubber and an α-olefinic polymer selected from the group consisting of a polypropylene and an ethylene-propylene block copolymer, said graft polymer (A) and polymer (B) being incorporated in the ratio of 10:90 to 90:10 by weight.

4,373,064

POLYPHENYLENE ETHER COMPOSITIONS

James G. Bennett, Jr., Menands, and Gim F. Lee, Jr., Albany, both of N.Y., assignors to General Electric Company, Pittsfield, Mass.
Continuation of Ser. No. 846,544, Oct. 28, 1977, abandoned, which is a continuation of Ser. No. 725,740, Sep. 23, 1976, abandoned, which is a continuation of Ser. No. 283,093, Aug. 23, 1972, abandoned. This application Mar. 23, 1981, Ser. No. 246,383
Int. Cl.³ C08L *71/04, 51/04*

U.S. Cl. 525—68 **7 Claims**

1. A high impact strength thermoplastic composition comprising:

(a) from about 20 to about 80 percent by weight of a polyphenylene ether resin; and

(b) from about 80 to about 20 percent by weight of a rubber modified polystyrene resin, said rubber modified polystyrene comprising a polystyrene matrix in which there is uniformly dispersed a discontinuous phase comprising particles of a styrene homopolymer englobulated in a diene rubber membrane, said particles having an average size ranging from about 0.1 to about 0.7 microns, the membrane thickness being not in excess of about ⅕th the average particle diameter, the diene rubber content being from about 1 to about 10% by weight of the rubber modified polystyrene.

4,373,065

OPTICALLY ISOTROPIC DEVICES

William M. Prest, Jr., Rochester, N.Y., assignor to Xerox Corporation, Stamford, Conn.
Filed Feb. 17, 1981, Ser. No. 235,311
Int. Cl.³ C08L *25/06;* **G02B** *3/00*

U.S. Cl. 525—132 **5 Claims**

1. An optical recording member for optically recording and retrieving of information thereon, said member having at least one optically isotropic layer made of an optically isotropic polymeric material which is a blend of at least two polymers, said two polymers being completely miscible at least over a range of relative proportions, said two polymers having opposite anisotropies, and the optically isotropic polymeric material having substantially zero birefringence which is not substantially changed by processing of said material into said layer.

4,373,066

POLYMER COMPOSITIONS

Khalid A. Karim; Pallavoor R. Lakshmanan, and James H. Rea, all of Houston, Tex., assignors to Gulf Oil Corporation, Pittsburgh, Pa.
Filed Jan. 12, 1981, Ser. No. 224,707
Int. Cl.³ C09J *3/00, 3/14;* **C08L** *23/08*

U.S. Cl. 525—133 **7 Claims**

1. A compatible blend of polymers consisting essentially of:

(a) A low density ethylene polymer,

(b) An ethylene copolymer,

(c) An ionomer resin, and

(d) A tackifying resin;

said low density ethylene polymer having a density of less than about 0.945 and a normal load melt index of about 0.5–20; said ethylene copolymer having polymerized therein about 70 to 90 weight % of ethylene and the balance an alkyl ester of acrylic or methacrylic acid or vinyl acetate; said two ethylene polymers being present in proportions such that the alkyl ester or vinyl acetate moiety of the ethylene copolymer constitutes about 4–12 weight % of the total weight of the two ethylene polymers; said ionomer resin being a metal salt of an ethylene-acid copolymer which is a copolymer of ethylene and acrylic or methacrylic acid having an acid content of about 1–10 mol % and having a high load melt index of at least about 1.0 and a normal load melt index of up to about 50; said tackifying resin being selected from the group consisting of:

(1) Aromatic hydrocarbon resins having a Ring and Ball softening temperature of about 40°–160° C.,

(ii) Terpene-phenolic resins having a Ring and Ball softening point of about 80°–135° C.

said composition containing 100 parts by weight of the two ethylene polymers and about 15–200 parts by weight of the ionomer resin and tackifying resin.

4,373,067

MOLDED ARTICLES OF IMPROVED IMPACT RESISTANCE AND COMPOSITIONS THEREFOR

Ronald L. Dieck, Sunnyvale, Calif., and Robert J. Kostelnik, Glenalden, Pa., assignors to General Electric Company, Pittsfield, Mass.
Filed Aug. 4, 1981, Ser. No. 289,966
Int. Cl.³ C08L *67/00, 69/00*

U.S. Cl. 525—146 **20 Claims**

1. A thermoplastic molding composition comprising:

(i) a poly(butylene terephthalate) resin as the principal resinous component therein, and

(ii) a minor amount of at least one rubbery vinyl polymer consisting essentially of a member selected from the group consisting of cis-polybutadiene, poly(butadiene-acrylonitrile), and poly(isoprene-isobutylene) as agent improving the resistance of articles molded from said composition to fracture under impact.

8. A composition according to claim 1 containing a minor but effective amount of an aromatic polycarbonate as supplementary impact resistance-improving agent.

4,373,068

THERMALLY REVERSIBLE COPOLYMERS AND PROCESS FOR THE PREPARATION THEREOF

Binnur Gunesin, Uniontown; Gary R. Hamed, Akron; Jung W. Kang, Clinton, and Donald N. Schulz, Hartville, all of Ohio, assignors to The Firestone Tire & Rubber Company, Akron, Ohio
Division of Ser. No. 132,737, Mar. 24, 1980, Pat. No. 4,307,210. This application Sep. 18, 1981, Ser. No. 303,219
Int. Cl.³ C08L *33/24*

U.S. Cl. 525—218 **6 Claims**

1. A process for improving the green strength of styrenebutadiene rubber comprising the steps of:

charging a reaction vessel with water, an emulsifier, an initiator and an N-(alkoxymethyl)acrylamide monomer;

purging said vessel with an inert gas;

charging a conjugated diene monomer and an activator to said reaction vessel;

polymerizing said monomers to form a copolymer latex;

coagulating said latex with an aqueous metal salt to form a thermally reversible copolymer; and

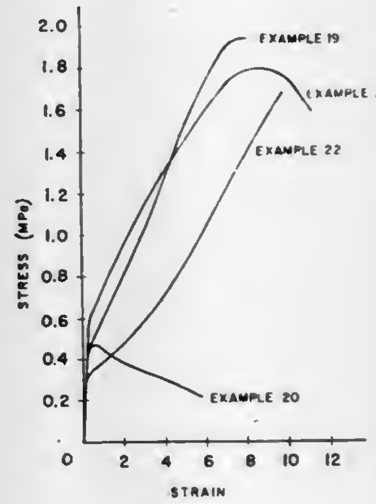

compounding said thermally reversible copolymer with said styrene-butadiene rubber.

4,373,069

ELASTOMER COMPOSITIONS

Robert Bond, Staffordshire, and Robert J. Blythe, Birmingham, both of England, assignors to Dunlop Limited, London, England
Continuation of Ser. No. 937,194, Aug. 28, 1978, abandoned. This application Aug. 28, 1979, Ser. No. 70,406
Claims priority, application United Kingdom, Sep. 9, 1977, 37823/77
Int. Cl.³ C08L *7/00, 9/00, 9/06*

U.S. Cl. 525—237 **1 Claim**

1. A tire having the combined properties of good grip on a wet road surface and low frictional resistance to rolling on the road, the tread of said tire comprising a material obtained by vulcanizing an elastomer blend comprising:

(a) as a major component a polymer selected from the group consisting of natural rubber, synthetic polyisoprene, rubbery styrene-butadiene copolymer and mixtures thereof having a glass transition temperature at most equal to −50° C.; and

(b) as a minor component at least one resinous styrene-butadiene copolymer having a glass transition temperature above 15° C.; said blend being substantially free of polybutadiene and said minor component being present in an amount up to 45% of the total weight of the major and minor components, which amount is effective to product said combined properties, and wherein said resinous styrene-butadiene copolymer has a styrene content in the range from 80–90% by weight.

4,373,070

SEQUESTERING AGENTS

Gerard Soula, Meyzieu, France, assignor to Rhone-Poulenc Industries, Paris, France
Filed Aug. 25, 1981, Ser. No. 296,212
Claims priority, application France, Aug. 27, 1980, 80 18562
Int. Cl.³ C08L *65/00*

U.S. Cl. 525—332.2 **36 Claims**

1. A composition of matter comprising a cross-linked organic polymeric substrate, said substrate having covalently coupled thereto a plurality of functional groups, the free valence of which having the structural formula:

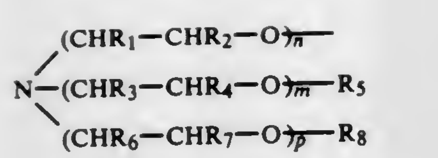

(I)

wherein R_1, R_2, R_3, R_4, R_6 and R_7, which are identical or different, each represents a hydrogen atom or an alkyl radical having 1 to 4 carbon atoms, R_5 and R_8, which are also identical or different, each represents a hydrogen atom, an alkyl or cycloalkyl radical having 1 to 12 carbon atoms, a phenyl radical, a $—C_qH_{2q}—\phi$ or $C_qH_{2+1}—\phi—$ radical, and further wherein q ranges from 1 to about 12, and n, m and p, which are also identical or different, range from 1 to 10, and ϕ is phenyl.

4,373,071

SOLID-PHASE SYNTHESIS OF POLYNUCLEOTIDES

Keiichi Itakura, Arcadia, Calif., assignor to City of Hope Research Institute, Duarte, Calif.

Filed Apr. 30, 1981, Ser. No. 258,925

Int. Cl.³ C08F *8/40*

U.S. Cl. 525—375 44 Claims

1. In a method of creating polynucleotides, the following steps:

treating a resin with potassium phthalimide to obtain a phthalimidomethyl-resin,

converting the phthalimidomethyl-resin into an amino resin with hydrazine, and

combining the amino-resin with an activated ester of a nucleoside to obtain an amino-bonded dimethoxytrityl resin.

4,373,072

SELF-CROSS-LINKING, THERMOSETTING, AQUEOUS LACQUER COATING MATERIAL, AND ITS UTILIZATION FOR THE CATHODIC DEPOSITION UPON ELECTRICALLY CONDUCTING SURFACES

Hans-Peter Patzschke, and Armin Göbel, both of Wuppertal, Fed. Rep. of Germany, assignors to Herberts Gesellschaft mit beschränkter Haftung, Wuppertal, Fed. Rep. of Germany

Filed Sep. 2, 1980, Ser. No. 183,041

Claims priority, application Fed. Rep. of Germany, Sep. 8, 1979, 2936411

Int. Cl.³ C08L *67/04*

U.S. Cl. 525—438 15 Claims

1. A self-cross linking binding agent rendered water-dilutable by protonization with acids for a self-cross-linking, thermosetting aqueous lacquer coating medium, comprising

(a) a synthetic resin with a mean molecular weight (M_n) of about 500 to 15,000 containing amino groups as well as carboxyl groups some of which are esterified with monoalcohols containing from 1 to 6 carbon atoms,

(b) said resin having an amine number of about 20 to 180 and an ester number of between 20 and 350,

(c) the ester group being substantially stable in a neutral aqueous medium,

(d) said ester groups being reactive with the primary and/or secondary amino groups of the synthetic resin in a basic medium at temperatures above about 140° C.

4,373,073

PROCESS FOR THE PREPARATION OF GLYCIDYL ETHERS OF MONOHYDRIC OR POLYHYDRIC PHENOLS, THE GLYCIDYL ETHERS AND USE THEREOF

Bernhard Wojtech, Bad Soden am Taunus; Hans-Joachim Kiessling; Wilhelm Becker, both of Hamburg, and Kurt Hermann, Idstein, all of Fed. Rep. of Germany, assignors to Hoechst Aktiengesellschaft, Frankfurt am Main, Fed. Rep. of Germany

Filed Nov. 24, 1980, Ser. No. 209,586

Claims priority, application Fed. Rep. of Germany, Nov. 24, 1979, 2947469

Int. Cl.³ C08G *59/06, 59/08*

U.S. Cl. 525—507 10 Claims

1. A process for the preparation of glycidyl ethers of phenols which comprises the steps of reacting (A) a monohydric or polyhydric phenol with an epihalohydrin in the presence of a conventional condensation catalyst to form a halohydrin ether and (B) adding thereto aqueous alkali and one of the components.

(a) a catalyst derived from at least one onium compound the substituents of which consists of hydrocarbon radicals selected from the group consisting of

(1) quarternary ammonium compounds with at least one aliphatic C_4-C_{22} hydrocarbon radical, and,

(2) tertiary sulphonium compounds; and

(b) compounds which will form in the reaction mixture in situ before the addition of the alkali, such an onium compound which is derived from the hylohydrin ethers and a corresponding substance selected from the group consisting of tertiary amines, teritary phosphines and thioethers and subjecting this mixture in the presence of an inert solvent or excess unreacted epihalohydrin to dehydrohalogenation of said halohydrin ether, the onium compound having a monovalent anion.

4,373,074

ACETYLENE-CONJUGATED DIENE POLYMERIZATION

Junji Furukawa, Kyoto; Nobuo Furuno, Neyagawa; Akira Matsumura, Neyagawa, and Teruaki Kuwajima, Neyagawa, all of Japan, assignors to Nippon Paint Co., Ltd., Japan

Filed Jun. 3, 1981, Ser. No. 270,121

Claims priority, application Japan, Jun. 3, 1980, 55-75227; Jun. 3, 1980, 55-75228; Jun. 3, 1980, 55-75229; Jun. 3, 1980, 55-75230

Int. Cl.³ C08F *4/70*

U.S. Cl. 526—92 7 Claims

1. A process for preparing copolymers of acetylene and conjugated diene compounds by copolymerization of acetylene with at least one conjugated diene compound in the presence of a catalyst composition in a reactor, wherein the catalyst composition comprises a dialkyl aluminum halide, an organic nickel compound and an active hydrogen compound selected from the group consisting of water, organic acids and alcohols, of which the molar concentrations have the following relationships:

$[Al]=2[Ni]+[H]$

$[Al]/[Ni]>4$

wherein [Al], [Ni] and [H] represent respectively the molar concentrations of the dialkyl aluminum halide, of the organic nickel compound and of the active hydrogen compound.

4,373,075

FROZEN EMULSION INITIATION OF POLYOL (ALLYL CARBONATE)

Richard A. Schwarz, Akron, Ohio, assignor to PPG Industries, Inc., Pittsburgh, Pa.

Filed Dec. 14, 1981, Ser. No. 330,424

Int. Cl.³ C08L *45/00*

U.S. Cl. 526—230.5 24 Claims

1. In a method of polymerizing a water insoluble polyol (allyl carbonate) by contacting the polyol(allyl carbonate) with a water insoluble initiator, the improvement comprising:

(1) forming a composition comprising:

a. the water insoluble polyol (allyl carbonate), and

b. an emulsion of the water insoluble initiator, an emulsifier, and water;

(2) adding a coagulant to the composition whereby to form an aqueous phase coagulum comprising coagulant and water, and an organic liquid phase comprising polyol (allyl carbonate) and initiator;

(3) separating the coagulum from the organic liquid phase; and

(4) thereafter forming a polymerizate of polyol(allyl carbonate).

4,373,076

TERPOLYMER WITH A HIGH REFRACTIVE INDEX

Niro Tarumi, Akishima; Mitsuo Sugimura, Fussa; Shigeo Komiya, Akishima, and Makoto Tsuchiya, Tokyo, all of Japan, assignors to Hoya Lens Corporation, Tokyo, Japan

Filed Oct. 26, 1981, Ser. No. 315,127

Int. Cl.³ C08F *26/06*

U.S. Cl. 526—261 1 Claim

1. A high refractive lens formed of a terpolymer produced by polymerizing a mixture comprising by weight 40 to 80% of diethylene glycol bisallyl carbonate, 10 to 30% of triallylisocyanurate and 10 to 30% of benzyl methacrylate.

4,373,077

ANAEROBICALLY CURING COMPOSITIONS

Charles W. Boeder, St. Paul, Minn., assignor to Minnesota Mining and Manufacturing Company, Saint Paul, Minn.

Continuation-in-part of Ser. No. 203,684, Nov. 3, 1980, abandoned. This application Aug. 3, 1981, Ser. No. 289,781

Int. Cl.³ C08F *20/10*

U.S. Cl. 526—309 14 Claims

1. An anaerobically-curing composition free of peroxy intiators and inorganic salt initiators, said composition comprising:

(A) 100 parts by weight of a polymerizable monomer having at least one α,β-unsaturated carboxyl functionality per molecule of monomer;

(B) as a first initiator component, about 0.1 to 20 parts by weight of a compound selected from the group consisting of organic sulfimides and perfluoroalkyl sulfonanilides;

(C) as a second initiator component, about 0.05 to 20 parts by weight of a secondary or tertiary aromatic amine; and

(D) as a polymerization inhibitor, about 0.01 to 3 parts by weight of a diaryl N-nitrosamine.

4,373,078

PROCESS FOR THE MANUFACTURE OF HARDENABLE COPOLYMERS AND THE USE THEREOF

Jürgen Ritz, Mainz; Hannes Fischer, Taunusstein, and Helmut Plum, Übach-Palenberg, all of Fed. Rep. of Germany, assignors to Hoechst Aktiengesellschaft, Frankfurt am Main, Fed. Rep. of Germany

Filed Aug. 19, 1981, Ser. No. 294,383

Claims priority, application Fed. Rep. of Germany, Aug. 22, 1980, 3031655

Int. Cl.³ C08F *20/26*

U.S. Cl. 526—317 10 Claims

1. A process for the manufacture of hardenable copolymers which comprises reacting at least one olefinically unsaturated dicarboxylic acid or an anhydride thereof with a polyhydric alcohol and a monoepoxide compound in at least one step, to yield an olefinically unsaturated diester containing OH groups and copolymerising this diester with a combination of (a) at least one copolymerisable monomer which contains no free COOH groups and (b) at least one copolymerisable monomer containing free COOH groups.

4,373,079

LAYERED OR AMORPHOUS CYCLIC ORGANOMETALLIC INORGANIC POLYMERS

Victor E. Parziale, Irvine; Martin B. Dines, Santa Ana, and Peter M. DiGiacomo, Mission Viejo, all of Calif., assignors to Occidental Research Corporation, Irvine, Calif.

Continuation-in-part of Ser. No. 945,971, Sep. 26, 1978, Pat. No. 4,232,146, and Ser. No. 60,077, Jul. 24, 1979. This application Sep. 25, 1979, Ser. No. 78,636

The portion of the term of this patent subsequent to Nov. 4, 1997, has been disclaimed.

Int. Cl.³ C08G *67/00, 79/04, 79/00*

U.S. Cl. 528—9 25 Claims

1. A solid inorganic polymeric compound having basic structural units of the formula:

$$M(O_3ZO_xR)_n$$

in which M is one or more tetravalent metals, Z is a pentavalent atom selected from the group consisting of phosphorus, arsenic, antimony, vanadium, niobium, tantalum and mixture thereof, R is an organo group selected from alicyclic, heterocyclic or aromatic groups, x is 0 or 1, and n is 2, provided that n is 1 when R is terminated with a tri- or tetra-oxy pentavalent atom.

4,373,080

POLYISOCYANATES, PREPARATION AND USE THEREOF

Wolfgang Reichmann, Duesseldorf; Klaus König, and Manfred Schönfelder, both of Leverkusen, all of Fed. Rep. of Germany, assignors to Bayer Aktiengesellschaft, Leverkusen, Fed. Rep. of Germany

Filed Dec. 19, 1979, Ser. No. 105,356

Claims priority, application Fed. Rep. of Germany, Dec. 30, 1978, 2856864

Int. Cl.³ C08G *18/78;* C07C *127/24*

U.S. Cl. 528—45 4 Claims

1. A polyisocyanate corresponding to the formula:

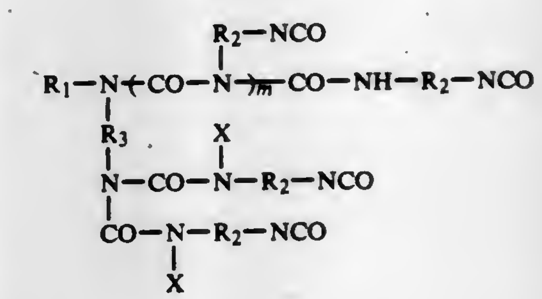

wherein

R_1 represents an aliphatic hydrocarbon radical selected from the group consisting of methyl, ethyl and propyl;

R_2 represents hexamethylene;

R_3 represents propylene;

X represents a radcial corresponding to the formula:

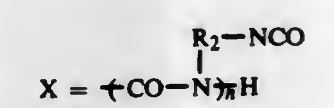

and m and n are each 0 or a number from 0 to 2.

4. In a process for producing polyurethane by reacting a

polyisocyanate with active hydrogen containing materials, the improvement wherein said polyisocyanate is the polyisocyanate of claim 1, optionally blocked with blocking agents.

4,373,081

COATING COMPOSITIONS AND PROCESS FOR THE PRODUCTION OF POLYURETHANE COATINGS

Klaus Nachtkamp, Cologne; Manfred Bock; Gerhard Mennicken, both of Leverkusen, and Josef Pedain, Cologne, all of Fed. Rep. of Germany, assignors to Bayer Aktiengesellschaft, Leverkusen, Fed. Rep. of Germany

Filed Nov. 27, 1981, Ser. No. 325,242

Claims priority, application Fed. Rep. of Germany, Dec. 10, 1980, 3046409

Int. Cl.³ C08G *18/80;* **B22B** *27/40*

U.S. Cl. 528—45 **5 Claims**

1. A thermally cross-linkable coating composition which is liquid and stable in storage at room temperature and which contains combinations of dialkyl-malonate-blocked polyisocyanates and organic polyhydroxyl compounds as binder and, optionally, auxiliaries and additives, characterized in that said binder comprises

(a) a polyisocyanate component containing dialkyl-malonate-blocked isocyanate groups and a content of blocked isocyanate groups, expressed as NCO, based on the weight of the polyisocyanate component excluding the weight of the blocking agent, of from about 3 to 33.6% by weight comprising

(aa) at least one dialkyl-malonate-blocked, optionally alkyl-substituted diisocyanato-diphenyl methane and-/or

(ab) at least one dialkyl-malonate-blocked NCO-prepolymer based on excess quantities of optionally alkyl-substituted diisocyanato-diphenyl methane and organic compounds containing at least two hydroxyl groups and

(b) a polyol component having an average hydroxyl functionality of greater than 2 and a content of alcoholic hydroxyl groups of from about 1.5 to 8% by weight, comprising at least one polyester polyol, in quantities corresponding to an equivalent ratio of blocked isocyanate groups to hydroxyl groups of from about 0.6:1 to 2:1.

4,373,082

CURATIVE FOR A TWO COMPONENT ISOCYANATE ADHESIVE AND SAID ADHESIVE

Michael E. Kimball, Ashland, and Marvin T. Randleman, New London, both of Ohio, assignors to The Goodyear Tire & Rubber Company, Akron, Ohio

Filed Nov. 16, 1981, Ser. No. 321,660

Int. Cl.³ C08G *18/32*

U.S. Cl. 528—60 **7 Claims**

1. A curative component for a two component isocyanate adhesive composed of a mixture of 1 to 10 equivalents of at least one polyol of 400 to about 6000 molecular weight and 1×10^{-3} to 1 equivalents of polyamine, said mixture having been reacted with at least 1×10^{-2} to no more than 2 equivalents of an organic polyisocyanate at a temperature of 32° to 82° C. to form insoluble micelles, said micelles being capable of disappearing not to reappear upon heating above 90° C.

7. A polyurethane adhesive composed of 1 to 4 parts of a prepolymer component and 1 part of a curative formed by a mixture of 1 to 10 equivalents of at least one polyol of about 400 to about 6000 molecular weight and 1×10^{-3} to 1 equivalent of diamine with at least part of said polyol and diamine being reacted with an organic diisocyanate to form micelles which exhibited very strong urea peaks and weak urethane peaks upon examination with NMR.

4,373,083

PROCESS OF MAKING URETHANE RHEOLOGY MODIFIERS

Jerome A. Seiner, Pittsburgh, and Karl F. Schimmel, Verona, both of Pa., assignors to PPG Industries, Inc., Pittsburgh, Pa.

Filed Dec. 29, 1980, Ser. No. 220,886

Int. Cl.³ C08G *18/12, 18/48*

U.S. Cl. 528—67 **15 Claims**

1. A process for making a urethane rheology modifier characterized in having a branched structure and hydrophobic tails, comprising the steps of:

(1) reacting in an organic solvent

(a) for each 8 moles of a polyalkylene oxide having a molecular weight of from about 2,000 to about 20,000;

(b) about 0.1 moles to about 3 moles of a polyfunctional material, wherein said material has at least 3 active hydrogens capable of reacting with isocyanate or is a polyisocyanate having at least 3 isocyanate groups;

(c) about 4 moles to about 15 moles of a diisocyanate;

(d) less than about 3 moles water; and

(e) an amount of additional diisocyanate to compensate for any water present,

wherein the organic solvent is selected from the group consisting of 1-methyl-2-pyrrolidinone, dimethyl formamide, dimethyl acetamide, gamma butyrolactone, dioxane, dimethyl and diethyl ethers of ethylene glycol and diethylene glycol, acetonitrile, and mixtures thereof; and

(2) end-capping the reaction product of step (1) with a monofunctional active hydrogen-containing compound or monoisocyanate so as to cap substantially all free isocyanate or hydroxyl groups.

4,373,084

SULFUR-MODIFIED POLYPROPYLENE ETHER GLYCOLS, A METHOD FOR PREPARING THEM, AND POLYURETHANES PREPARED THEREFROM

Ivan M. Robinson, Wilmington, Del., assignor to E. I. Du Pont de Nemours and Company, Wilmington, Del.

Filed Jul. 7, 1981, Ser. No. 281,199

Int. Cl.³ C08G *18/52;* **C09K** *3/00*

U.S. Cl. 528—79 **10 Claims**

1. Polypropylene ether glycol modified so that it contains in its chain 1–25%, by weight, of moieties represented by the structure

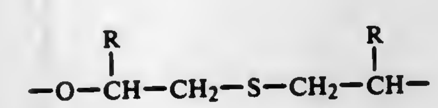

where R is hydrogen, an alkyl radical of 1–3 carbon atoms or phenyl, and the oxygen atom is linked to a hydrogen atom or a carbon atom.

9. A polyurethane which is the reaction product of

(a) the polypropylene ether glycol of claim 1, 2, 3 or 4;

(b) an organic polyisocyanate; and

(c) a chain extender.

4,373,085

POLYESTERAMIDE ADHESIVES

Manfred Bolze, Bergkamen-Oberaden, and Manfred Drawert, Froendenberg, both of Fed. Rep. of Germany, assignors to Schering Aktiengesellschaft, Berlin and Bergkamen, Fed. Rep. of Germany

Filed Aug. 24, 1981, Ser. No. 295,660

Claims priority, application Fed. Rep. of Germany, Sep. 3, 1980, 3033132

Int. Cl.³ C08G *69/44*

U.S. Cl. 528—291 **6 Claims**

1. A polyesteramide prepared by the condensation of

(A) a dimerized fatty acid having 16–44 carbon atoms,

(B) a sole diamine of the formula

$H_2N—R—NH_2$

wherein R is aliphatic hydrocarbon having 2–36 carbon atoms, and

(C) diglycolamine of formula H_2N-CH_2CH_2-O-CH_2-CH_2-OH.

4,373,086

CURABLE RESIN COMPOSITION FROM CYANATE ESTER AND ACRYLIC ESTER

Nobuyuki Ikeguchi, Tokyo, Japan, assignor to Mitsubishi Gas Chemical Company, Inc., Tokyo, Japan

Filed Feb. 3, 1981, Ser. No. 231,428

Claims priority, application Japan, Feb. 6, 1980, 55/13202

Int. Cl.³ C08G *73/12, 83/00*

U.S. Cl. 528—322 **10 Claims**

1. A curable resin composition comprising:

(a) at least one cyanate ester compound selected from the group consisting of:

(1) a polyfunctional aromatic cyanate ester monomer having the formula:

$$R\!\leftarrow\!O-C\equiv N)_m$$

wherein m is 2 to 5 and R is an aromatic organic group, the cyanate groups being bonded to an aromatic ring of said aromatic organic group,

(2) a homoprepolymer of one or more cyanate esters of (1), and

(3) a copolymer of (1) and an amine; and

(b) at least one compound having two or more acrylic ester groups selected from the group consisting of:

(i) compounds represented by the formula

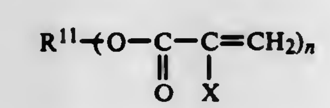

wherein R^{11} is aliphatic hydrocarbon having 1–15 carbon atoms, or hydroxy or halogen-substituted hydrocarbon having 1–15 carbon atoms, X is hydrogen or methyl, and n is an integer and is 2, 3, 4, 5 or 6, and the valency of R^{11} is the same as n;

(ii) compounds represented by the formula

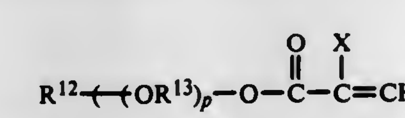

wherein R^{12} is aliphatic hydrocarbon or hydroxy or halogen-substituted hydrocarbon, R^{13} is alkylene or hydroxy or halogen-substituted alkylene, R^{12}, R^{13}, p and k are selected so that (the number of carbon atoms of R^{12})+(the number of carbon atoms of R^{13})×(p)×(k) is 15 or less, X is as defined above and the valency of R^{12} is the same as k, and k is 2, 3, 4, 5 or 6;

(iii) compounds represented by the formula

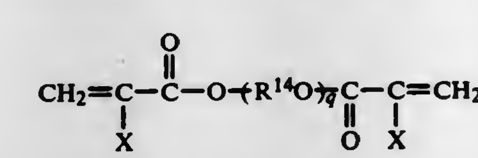

wherein R^{14} is alkylene, or hydroxy or halogen-substituted alkylene, R^{14} and q are selected so that (the number of carbon atoms of R^{14})×(q) is 15 or less, X is as defined above;

(iv) compounds represented by the formula

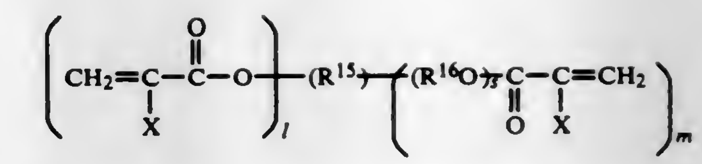

wherein R^{15} is aliphatic hydrocarbon or hydroxy or halogen-substituted hydrocarbon, R^{16} is alkylene or hydroxy or halogen-substituted alkylene, $l+m$ is 2, 3, 4, 5 or 6, (the number of carbon atoms of R^{15})+(the number of carbon atoms of R^{16})×(s)×(m) is 15 or less, X is as defined above, and the valency of R^{15} is the same as $l+m$;

(v) compounds represented by the formula

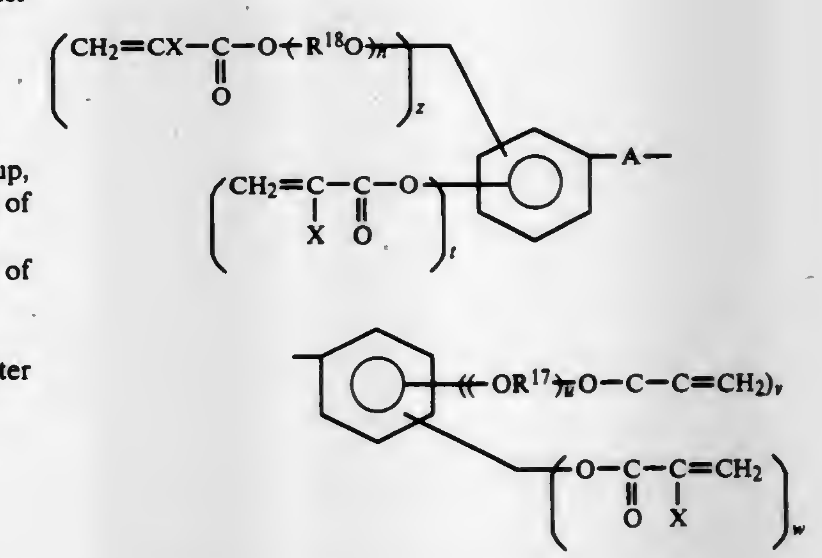

wherein R^{17} and R^{18} are the same or different, and independently alkylene having 2–3 carbon atoms, or hydroxy or halogen-substituted alkylene having 2–3 carbon atoms, A is —O—, —CH_2—, —C_2H_4—, or —C_3H_6—, t and w are independently 0 or 1, v and z are independently 1 or 2, and u and h are independently 0 or integer 1–7, and X is as defined above,

(vi) compounds represented by the formula

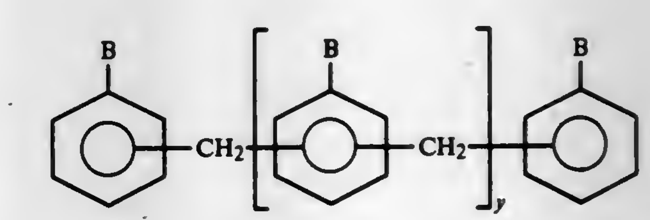

wherein y is 1, 2, or 3 and at least two of B groups on the benzene rings are

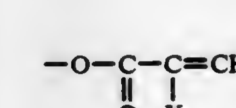

wherein X is as defined above and the remainder of B groups are hydroxy;

(vii) compounds represented by the formula

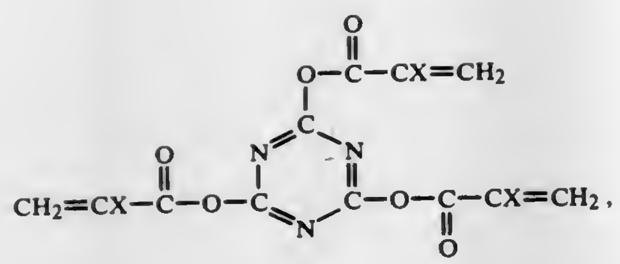

wherein X is as defined above, and mixtures thereof; said composition including a mixture of components (a) and (b), a preliminary reaction product of components (a) and (b), or the combination of said mixture and said preliminary reaction product.

4,373,087

O-TOLIDINE SULFONE BASED COPOLYAMIDE FIBER

Takaho Kaneda, Chiba; Seiji Ishikawa, Ichihara; Hiroshi Daimon, Ichihara; Toshio Katsura, Ichihara; Tadahiro Hondo, Ichihara, and Masahiro Ueda, Ichihara, all of Japan, assignors to UBE Industries Ltd., Yamaguchi, Japan

Continuation-in-part of Ser. No. 973,636, Dec. 27, 1978, abandoned. This application Mar. 13, 1981, Ser. No. 243,423

Claims priority, application Japan, Jan. 6, 1978, 53-282

Int. Cl.³ C08G *69/32*

U.S. Cl. 528—337 **5 Claims**

1. A fiber composed of a high-molecular-weight copolyamide consisting essentially of units (A) represented by the following formulae:

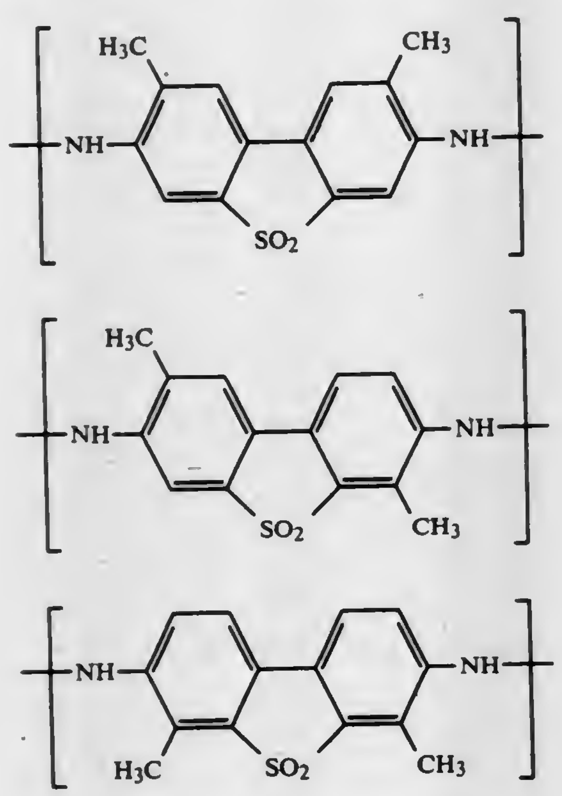

units (B) represented by the following formula:

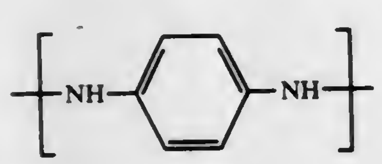

and units (C) represented by the following formula:

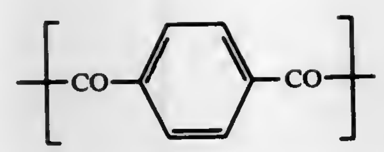

in which units (A), (B) and (C) are present in such amounts that the sum of amounts of units (A) and (B) is substantially equimolar to the amount of the units (C) and the molar ratio of the units (A) to the units (B) is in the range of from 10/90 to 50/50.

4,373,088

TRANSPARENT POLYAMIDES FROM BRANCHED CHAIN DIAMINE AND CYCLOALIPHATIC DIAMINE

Josef Disteldorf, Am Sengenhoff 2a; Werner Hübel, Am Birnenbruch 34, both of 4690 Herne 1; Siegfried Brandt, Grabenstrasse 8, and Hans-Jürgen Haage, Gauss-strasse 13, both of 4690 Herne 2, all of Fed. Rep. of Germany

Filed May 9, 1980, Ser. No. 147,960

Claims priority, application Fed. Rep. of Germany, May 26, 1979, 2921495

Int. Cl.³ C08G *69/26*

U.S. Cl. 528—338 **6 Claims**

1. A solid transparent polyamide consisting of repeating structural units of the formula

—HN—R—NH—OC—R'—CO—,

in which R' is the hydrocarbon radical of terephthalic acid and R is 60–95 mole percent of a divalent hydrocarbon radical of the compounds (a), 5-methylnonamethylene, (b) 2,4-dimethyloctamethylene, and (c) 2,4,6-trimethylheptamethylene, wherein the mole ratio a:b:c is between 1:0:0 and 0.50:0.45:0.05, and 40–5 mole percent of a divalent hydrocarbon radical of the formula

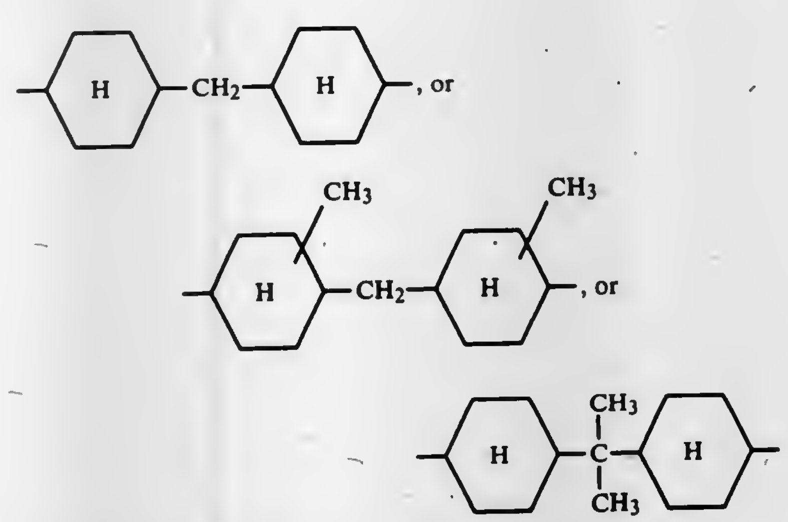

wherein the polyamide has a glass transition temperature of 125° to 180° C.

4,373,089

PHENANTHRENE BASED POLYIMIDE RESIN

Joseph G. Robinson, Winchcombe, and David I. Barnes, Cheltenham, both of England, assignors to Coal Industry (Patents) Limited, London, England

Filed Mar. 3, 1981, Ser. No. 240,007

Claims priority, application United Kingdom, Mar. 19, 1980, 8009255

Int. Cl.³ C08G *73/10*

U.S. Cl. 528—353 **8 Claims**

1. A method of producing a polyimide resin comprising reacting a phenanthrene anhydride prepared by (1) converting a phenanthrene to its 9, 10 diol derivative; (2) reacting said derivative with formaldehyde or a formaldehyde donor in the presence of an acid catalyst to give a reaction product having substantially only methylene bridges between adjacent phenanthrene moieties; (3) oxidizing said reaction product to break the 9, 10 bond in the phenanthrene moieties to give a polycarboxylated product and (4) dehydrating said polycarboxylated product to produce its anhydride derivative; with an aromatic diamine to form the polyimide resin.

4,373,090

ARYLENE SULFIDE POLYMER PREPARATION

James T. Edmonds, Jr., Bartlesville, Okla., assignor to Phillips Petroleum Company, Bartlesville, Okla.

Filed Feb. 16, 1982, Ser. No. 349,275

Int. Cl.³ C08G *75/14*

U.S. Cl. 528—387 **4 Claims**

1. A method for producing polymers comprising:

(a) contacting at polymerization conditions an anhydrous reaction mixture comprising:

(1) at least one polyhalo-substituted aromatic compound,

(2) at least one organic amide,

(3) at least one alkali metal hydroxide, and

(4) H_2S, and

(b) maintaining said reaction mixture at polymerization conditions for a time sufficient to produce polymer.

4,373,091

ARYLENE SULFIDE POLYMER PURIFICATION

James T. Edmonds, Jr., Bartlesville, Okla., assignor to Phillips Petroleum Company, Bartlesville, Okla.

Filed Nov. 7, 1980, Ser. No. 205,052

Int. Cl.³ C08F *6/24*

U.S. Cl. 528—481 **16 Claims**

1. A process for the reduction of ash-forming impurities contained in arylene sulfide polymers and/or stabilize the melt flow of at least partially cured arylene sulfide polymers which polymers have been purified to substantially remove contaminants such as metal halides, organic solvents, metal sulfides, and other impurities present in the crude reaction product which comprises contacting an aqueous slurry consisting essentially of particulate purified arylene sulfide polymer containing ash-forming impurities and/or at least partially cured purified arylene sulfide polymer and water with an oxygen-containing gas and at least one water soluble chemical treating agent selected from sodium hydroxide and sodium carbonate at an elevated temperature not exceeding about 25° F. below the melting point of the polymer for a period of time sufficient to reduce the ash content and stabilize the melt flow of the polymer.

6. A process for the reduction of ash-forming impurities contained in arylene sulfide polymers and/or stabilize the melt flow of at least partially cured arylene sulfide polymers which polymers have been purified to substantially remove contaminants such as metal halides, organic solvents, metal sulfides, and other impurities present in the crude reaction product which comprises contacting an aqueous slurry consisting essentially of particulate purified arylene sulfide polymer containing ash-forming impurities and water in the absence of added oxygen-containing gas with at least one water soluble chemical treating agent selected from

(a) alkaline earth metal carboxylates

(b) organic acids and

(c) inorganic basic compounds selected from hydroxides and carbonates of the alkali and alkaline earth metals, at an elevated temperature not exceeding about 25° F. below the melting point of the polymer for a period of time sufficient to reduce the ash content and stabilize the melt flow of the polymer.

4,373,092

METHOD OF PROCESS CONTROL FOR THERMOSETTING RESINS HAVING ADDITION-TYPE REACTIONS

Andrew Zsolnay, Manhattan Beach, Calif., assignor to Lockheed Corporation, Burbank, Calif.

Filed Dec. 29, 1980, Ser. No. 220,370

Int. Cl.³ C08F *6/00*

U.S. Cl. 528—481 **7 Claims**

1. The method of curing a thermosetting polymeric material which undergoes an addition-type reaction during curing, comprising the steps of:

(a) determining from a first sample of said material the optimum time for applying pressure to said material;

(b) determining that frequency of an alternating current signal applied to a second sample of said material which causes a characteristic value of dissipation to occur at said optimum time;

(c) applying heat to a third sample of said material to initiate curing thereof;

(d) applying an alternating current signal having said determined frequency to said third sample to generate a dissipation curve, as said curing progresses, having said characteristic value at said optimum time;

(e) generating a pressure application control signal when said characteristic value is reached; and

(f) applying pressure to said third sample of said material in response to said control signal.

4,373,093

RECOVERY OF CHLORINATED POLY(VINYL CHLORIDE)

Alan J. Olson, Westlake, and Robert G. Vielhaber, Doylestown, both of Ohio, assignors to The B. F. Goodrich Company, Akron, Ohio

Filed Dec. 24, 1980, Ser. No. 219,650

Int. Cl.³ C08F *6/00*

U.S. Cl. 528—491 **10 Claims**

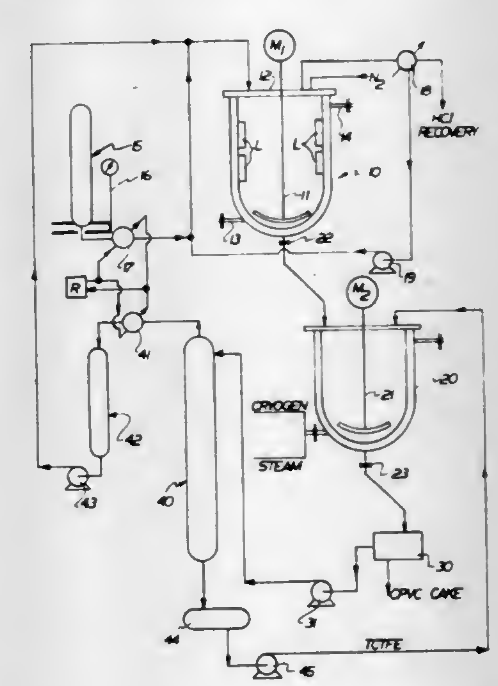

1. A process for recovering chlorinated poly(vinyl chloride) from a syrup of said chlorinated poly(vinyl chloride) dissolved in liquid chlorine, said process comprising,

(a) adding said syrup to a halogenated lower alkane in which said liquid chlorine is substantially completely soluble,

(b) precipitating said chlorinated poly(vinyl chloride) as discrete solid particles, and,

(c) recovering said solid particles.

4,373,094

ANTHRACYCLINE DERIVATIVES

Toshikazu Oki, Yokohama; Yasue Matsuzawa, Fujisawa; Tomoyuki Ishikura, Chigasaki; Tomio Takeuchi, and Hamao Umezawa, both of Tokyo, all of Japan, assignors to Sanraku-Ocean Co., Ltd., Tokyo, Japan

Filed Jul. 29, 1981, Ser. No. 288,072

Claims priority, application Japan, Aug. 1, 1980, 55-106522

Int. Cl.³ A61K *31/71;* **C07H** *15/24*

U.S. Cl. 536—6.4 **5 Claims**

1. Anthracycline derivatives and acid addition salts thereof having the general formula:

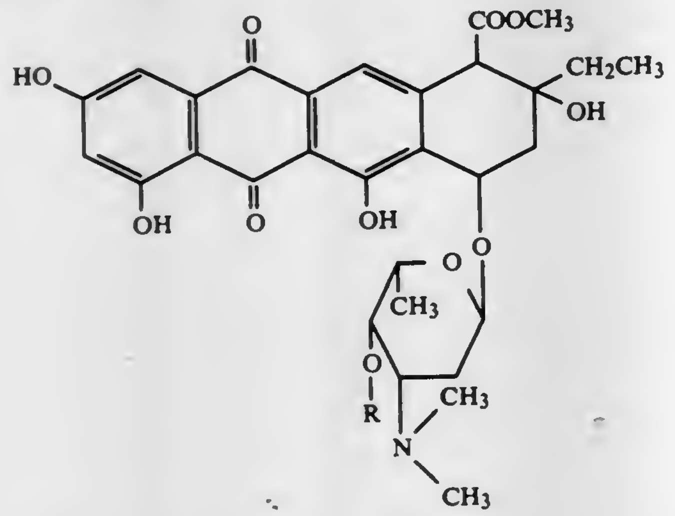

(I)

wherein R represents a hydrogen atom, or a sugar chain moiety of the formula:

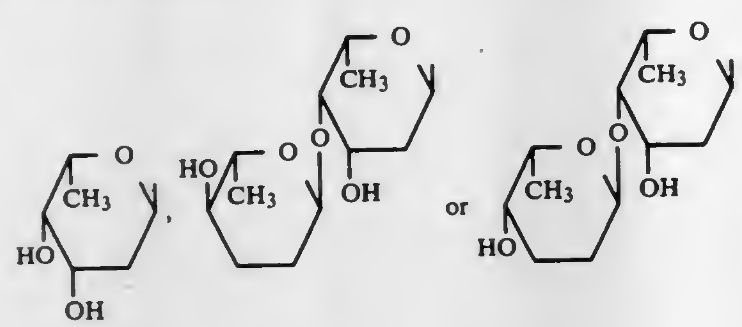

and hydroxyl; R' is a member of the group consisting of hydrogen, and C_2–C_{18} hydrocarbon carbonyl; Y is a member of the group consisting of oxo, and hydroxyl and solid and the dotted lines combined represent optionally a single or a double bond, and X is a monovalent organic radical bonded by a carbon atom to the macrolide ring, said X being a member selected from the group consisting of —CH_2OR', —CH_2OH, —CHO, —CH_2NH_2, —CH_2NHR'', —$CH_2NR''R'''$, CH_2OCOR'', —CH_2NHCOR'' and —CH_2O-glycosyl, excluding mycinosyl and 3''-desmethylmycinosyl wherein R'' and R''' independently are members of the group consisting of C_1–C_8 alkyl, C_7–C_{18} aralkyl and C_3–C_7 heterocycle wherein the hetero atom is sulfur, nitrogen or oxygen.

4,373,095

MACROLIDE ANTIBACTERIAL AR-5 COMPONENTS

Ashit K. Ganguly, Upper Montclair; Olga Sarre, Verona, and Yi-Tsung Liu, Parsippany, all of N.J., assignors to Schering Corporation, Kenilworth, N.J.

Continuation-in-part of Ser. No. 106,184, Dec. 21, 1979, abandoned. This application Mar. 17, 1981, Ser. No. 244,541

Int. Cl.³ C07H *17/06*

U.S. Cl. 536—7.1 **22 Claims**

1. A compound of the formula:

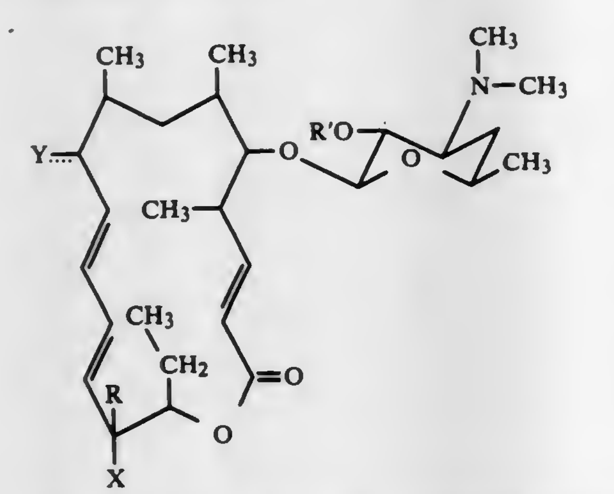

wherein R is a member of the group consisting of hydrogen

4,373,096

CROSSLINKED CHITIN DERIVATIVES

Junichi Koshugi, Tokyo, Japan, assignor to Kureha Kagaku Kogyo Kabushiki Kaisha, Tokyo, Japan

Filed Mar. 24, 1980, Ser. No. 132,787

Claims priority, application Japan, Apr. 6, 1979, 54/41812

Int. Cl.³ C08B *37/08*

U.S. Cl. 536—20 **3 Claims**

1. A crosslinked derivative of chitin prepared by the process comprising (a) crosslinking natural chitin or regenerated chitin with a crosslinking agent selected from the group consisting of compounds represented by the formula,

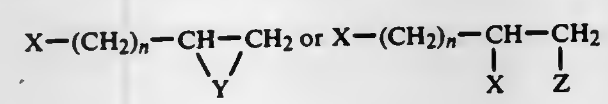

wherein X is an atom of chlorine of bromine; Y is an atom of oxygen or sulfur; Z is a hydroxyl- or thiol group and n is an integer of 1, 2 or 3, (b) carboxylating the thus crosslinked chitin or crosslinked regenerated chitin with an etherifying agent selected from halogenocarboxylic acids represented by the formula, X—$(CH_2)_n$—COOH, wherein X is an atom of chlorine or bromine and n is an integer of 1, 2 or 3 and (c) deacetylating the thus carboxylated crosslinked chitin with an aqueous 4 to 15 N alkali solution at a temperature of 65° to 150° C. for 0.1 to 48 hours to obtain said crosslinked derivative of chitin of a degree of crosslinking of 0.01 to 0.3, a degree of carboxyalkylation of 0.1 to 0.9 and a degree of de-acetylation of 0.1 to 1.0 per N-acetylglucosamine unit.

4,373,097

PROCESS FOR PREPARING ADENOSINE DERIVATIVES OF ANTI-INFLAMMATORY AND ANALGESIC ACTIVITY

Giorgio Stramentinoli, and Federico Gennari, both of Milan, Italy, assignors to BIORESEARCH S.r.l., Milan, Italy

Filed Apr. 27, 1981, Ser. No. 257,969

Int. Cl.³ C07H *19/16*

U.S. Cl. 536—26 **3 Claims**

1. A process for preparing 5'-deoxy-5'-methylthioadenosine, wherein S-adenosyl-methionine, in concentrated aqueous solution, is hydrolysed by heating under reflux, and the 5'-deoxy-5'-methylthioadenosine formed is separated by cooling after neutralising the reaction mixture.

4,373,098

PROCESS FOR CONVERTING CELLULOSE DIRECTLY INTO ALKALI CELLULOSE

Gedeon I. Deak, Wilmington, Del., assignor to E. I. Du Pont de Nemours and Company, Wilmington, Del.

Filed Aug. 20, 1981, Ser. No. 294,790

Int. Cl.³ C08B *1/08*

U.S. Cl. 536—101 **4 Claims**

1. A process for converting cellulose into alkali cellulose which comprises combining:

(a) particles of cellulose with the largest 1% of the particles

having a minimum size Y of less than 600 microns and the bulk density X of the particles being greater than 0.2 g/cm^3 such that the relationship between X and Y is defined by the equation $Y-760X \leqq 50$; and

(b) 125 g to 240 g of 20–40% aqueous NaOH for each 100 g of cellulose for at least 4 minutes at 15°–60° C.

4,373,099

CONTINUOUS PROCESS FOR PREPARATION OF A THINNED CATIONIC STARCH PASTE

E. Daniel Hubbard, West Liberty, and Richard D. Harvey, Muscatine, both of Iowa, assignors to Grain Processing Corporation, Muscatine, Iowa

Filed Oct. 7, 1981, Ser. No. 309,268

Int. Cl.³ C08B *31/00, 31/18*

U.S. Cl. 536—105 **24 Claims**

1. A process for preparing thinned starch pastes which comprises substantially simultaneously reacting starch and caustic with a water soluble oxidant and a cationic monomeric halogenated alkyl or alkenyl amine.

4,373,100

METHYL-QUINOXALINE-1,4-DIOXIDE DERIVATIVES

Pal Benkö; Daniel Bozsing; Janos Gundel, and Karoly Magyar, all of Budapest, Hungary, assignors to Egyt Gyogyszervegyeszeti Gyar, Budapest, Hungary

Filed Jun. 2, 1981, Ser. No. 269,720

Claims priority, application Hungary, Jun. 3, 1980, 1386

Int. Cl.³ C09B *23/00, 25/00*

U.S. Cl. 542—439 **11 Claims**

1. A compound of the formula (*Ia*)

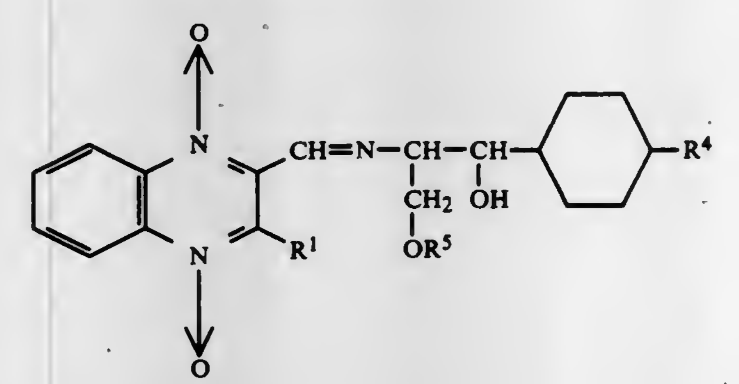

wherein

R^1 is hydrogen or lower alkyl;

R^4 is nitro, amino, trifluoromethyl, lower alkyl or lower alkoxy; and

R^5 is hydrogen or lower alkylcarbonyl; or a pharmaceutically acceptable acid accition salt thereof.

4,373,101

QUINOXALINE-2-YL ETHENYL KETONES

Pal Benkö; Daniel Bozsing; Janos Gundel, and Karoly Magyar, all of Budapest, Hungary, assignors to Egyt Gyogyszervegyeszeti Gyar, Budapest, Hungary

Filed Jun. 2, 1981, Ser. No. 269,721

Claims priority, application Hungary, Jun. 3, 1980, 1385/80

Int. Cl.³ C09B *55/00*

U.S. Cl. 542—440 **8 Claims**

1. A compound of the formula (I)

(I)

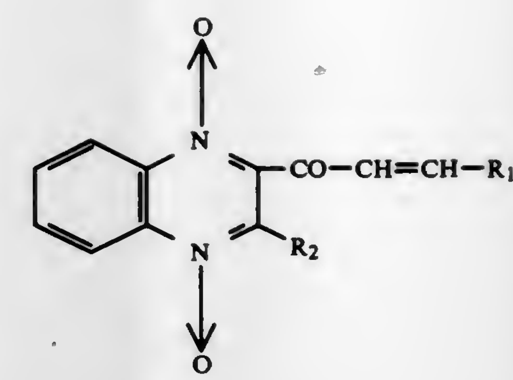

wherein

R_1 is phenyl, alpha-naphthyl or beta-naphthyl, each of which is unsubstituted or substituted by halogen, hydroxy, C_1 to C_4 alkyl or C_1 to C_4 alkoxy, or R_1 is 6-benzo[1,3]dioxanyl, quinoxaline-2-yl-1,4-dioxide, or 3-pyridyl, each of which is unsubstituted or substituted by one or two C_1 to C_4 alkyl groups; and

R_2 is hydrogen or C_1 to C_4 alkyl.

4,373,102

ISOINDOLINE DYES, THEIR PREPARATION AND USE

Peter Neumann, Wiesloch; Wolfgang Elser, Wachenheim; Gustav Bock, Neustadt, and Wolf-Dieter Kermer, Fussgoenheim, all of Fed. Rep. of Germany, assignors to BASF Aktiengesellschaft, Rheinland-Pfalz, Fed. Rep. of Germany

Filed Mar. 7, 1980, Ser. No. 128,156

Claims priority, application Fed. Rep. of Germany, Mar. 29, 1979, 2912428

Int. Cl.³ C07D *209/44, 401/10, 403/10, 413/10*

U.S. Cl. 544—143 **21 Claims**

1. A dye of the formula

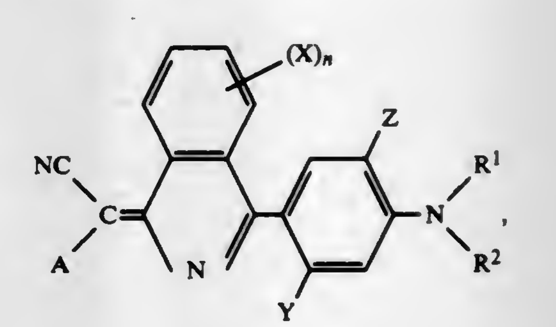

wherein

A is cyano, carbo-C_1–C_4-alkoxy, acetyl, benzoyl, 4-nitrophenyl, 4-cyanophenyl, carbamyl, N-C_1–C_4-alkylcarbamyl, where alkyl is unsubstituted or substituted by C_1–C_4-alkoxy, or N-phenylcarbamyl, where phenyl is unsubstituted or substituted by C_1–C_4-alkyl or C_1–C_4-alkoxy,

X is hydrogen, chlorine, C_1–C_4-alkyl or C_1–C_4-alkoxy, and if n is 2 the substituents may be identical or different,

n is 1 or 2,

R^1 is hydrogen, methyl, ethyl or 2-hydroxyethyl and

R^2 is phenyl which is unsubstituted or substituted by C_1–C_4-alkyl or C_1–C_4-alkoxy, or is cyclohexyl, or

R^1 is hydrogen and

R^2 is C_1–C_4-alkyl or

R^1 and R^2 are C_1–C_6-alkyl; C_1–C_4-alkyl substituted by chlorine, cyano, hydroxyl, C_1–C_4-alkoxy, phenoxy, C_2–C_5-alkanoyloxy (which may or may not be substituted by C_1–C_4-alkoxy or phenoxy) or carbo-C_1–C_4-alkoxy; allyl; or phenyl-C_1–C_4-alkyl or

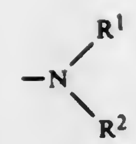

is a saturated heterocyclic five-membered or six-membered ring which may additionally contain an oxygen or a further nitrogen as a ring member,

Y is hydrogen, hydroxyl, methyl or ethyl;

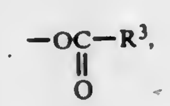

where R^3 is linear or branched C_1-C_{12}-alkyl or phenyl which is unsubstituted or substituted by C_1-C_4-alkyl or C_1-C_4-alkoxy;

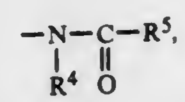

where R^4 is hydrogen or C_1-C_4-alkyl and R^5 is hydrogen, linear or branched C_1-C_{12}-alkyl, trifluoromethyl, chloromethyl, C_1-C_4-alkoxymethyl or phenoxymethyl (where phenoxy may or may not be substituted by one or two chlorine, methoxy, nitro or C_1-C_4-alkyl, and, in the case of two substituents, the substituents may be identical or different); phenylthiomethyl, where phenyl is unsubstituted or substituted by C_1-C_4-alkyl; benzyl; phenylethyl; C_3-C_7-cycloalkyl; phenyl which is unsubstituted or substituted by C_1-C_{12}-alkyl, C_1-C_{12}-alkoxy or nitro; H_5C_6—CH=CH—; —CH_2—PO(OR^6)$_2$, where R^6 is C_1-C_4-alkyl, or

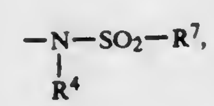

where R^4 has the above meanings and R^7 is C_1-C_{12}-alkyl, phenyl or C_1-C_{12}-alkylphenyl, or

Y is N-C_1-C_4-alkylamino, when R^1 and R^2 are C_1-C_4-alkyl or

Y is N,N-di-C_1-C_4-alkylamino, N-pyrrolidinyl, N-piperidinyl or N-morpholinyl when

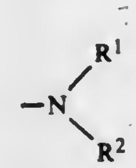

is N,N-di-C_1-C_4-alkylamino, N-pyrrolidinyl, N-piperidinyl or N-morpholinyl, and

Z is hydrogen or, when R^1 and R^2 are C_1-C_4-alkyl or allyl and Y is

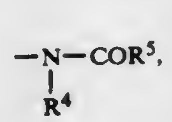

Z is hydrogen, methoxy or ethoxy.

4,373,103

DIBROMONEOPENTYL PHOSPHATE MELAMINE SALT FLAME RETARDANT

Alfred K. Jung, Ridgewood; Joseph Silberberg, Brooklyn, and Edward D. Weil, Hastings-on-Hudson, all of N.Y., assignors to Stauffer Chemical Company, Westport, Conn.

Filed May 5, 1980, Ser. No. 146,583

Int. Cl.³ C07D *251/70;* **C07F** *9/65, 9/09*

U.S. Cl. 544—195 **4 Claims**

1. Dibromoneopentyl phosphate melamine salt represented by the formula:

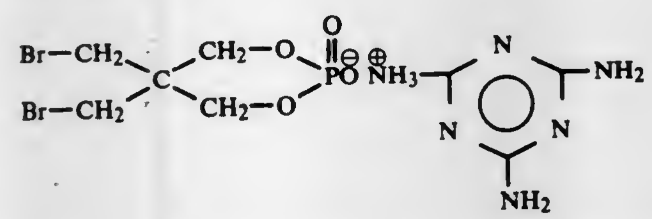

said salt being a solid having a decomposition point of about 300° C.

4,373,104

SULFUR-CONTAINING ISOQUINOLINE DERIVATIVES, PROCESS FOR THE PREPARATION THEREOF AND PHARMACEUTICAL COMPOSITIONS CONTAINING THEM

Kalman Takacs; Maria H. Papp; Gabor Kovacs; Ilona K. Ajzert; Antal Simay; Peter L. Nagy; Marian E. Puskas; Gyula Sebestyen; Istvan Stadler, and Zoltan Sümeghy, all of Budapest, Hungary, assignors to Chinoin Gyogyszer es Vegyeszeti Termekek Gyara, Budapest, Hungary

Filed Jul. 1, 1980, Ser. No. 164,939

Claims priority, application Hungary, Feb. 7, 1979, CI 1944

Int. Cl.³ C07D *217/14;* **A61K** *31/47*

U.S. Cl. 546—145 **28 Claims**

1. A compound of the formula (I)

(I)

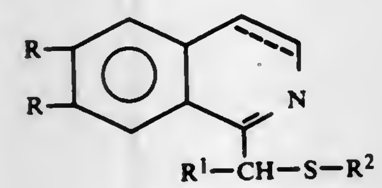

wherein

R is hydrogen, hydroxyl or C_1 to C_4 alkoxy;

R^1 is hydrogen, C_1 to C_4 alkyl, phenyl-C_1 to C_4 alkyl, phenyl, halo-phenyl or C_1 to C_4 alkoxy-phenyl;

R^2 is allyl, phenyl, halo-phenyl, C_1 to C_4 alkoxy-phenyl, carboxy-phenyl, or a group of the formula (A):

(A)

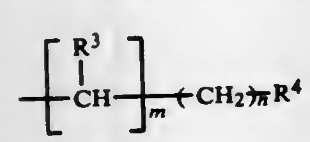

wherein

R^3 is hydrogen, C_1 to C_4 straight or branched chain alkyl, or phenyl;

m and n are each 0, 1 or 2 and m+n is at least 1; and

R^4 is hydrogen, phenyl, hydroxyl, acetoxy, carboxyl, C_1 to C_6 alkoxycarbonyl, carbamoyl, carbazoyl, or dialkylamino having 1 to 6 carbon atoms in each alkyl moiety; and

the dotted line stands for a further carbon-carbon bond or a hydrogen atoms in each of the 3- and 4-positions of the ring, or a pharmaceutically effective salt thereof.

4,373,105

M-ANILIDE-URETHANES

Wolfgang Rohr, Mannheim; Ulrich Schirmer, Heidelberg, and Bruno Wuerzer, Otterstadt, all of Fed. Rep. of Germany, assignors to BASF Aktiengesellschaft, Fed. Rep. of Germany

Continuation of Ser. No. 86,134, Oct. 18, 1979, abandoned. This application Mar. 11, 1981, Ser. No. 242,558

Claims priority, application Fed. Rep. of Germany, Oct. 26, 1978, 2846625

Int. Cl.³ C07C *155/08, 155/02, 155/03, 125/065*

U.S. Cl. 560—27 **3 Claims**

1. An m-anilide-urethane of the formula

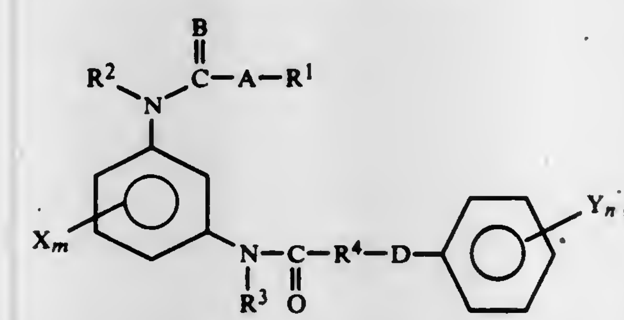

where A and B are identical or different and each denotes oxygen or sulfur, and D is oxygen R^1 denotes unsubstituted alkyl; alkyl substituted by halogen, alkoxy, alkoxycarbonyl or cyano; unsubstituted or halogen-substituted alkenyl; unsubstituted or halogen- or alkoxy-substituted alkynyl; or R^1 denotes unsubstituted or alkyl-substituted cycloalkyl or aryl, R^2 and R^3 are identical or different and each denotes hydrogen, alkyl, alkoxyalkyl or haloalkyl, R^4 denotes alkylene of 1 to 6 carbon atoms which is unsubstituted or substituted by alkyl, alkoxyalkyl or haloalkyl, X denotes hydrogen, alkyl, haloalkyl, alkoxy, halogen, nitro or amino, Y denotes hydrogen, alkyl, haloalkyl, alkoxyalkyl, cycloalkyl, aralkyl, halogen, or alkenyl chain fused with the benzene ring to give a bromo-substituted or unsubstituted naphthyl ring, Y further denotes alkoxy, haloalkoxy, alkylthio, nitro, aryl, thiocyanato, cyano,

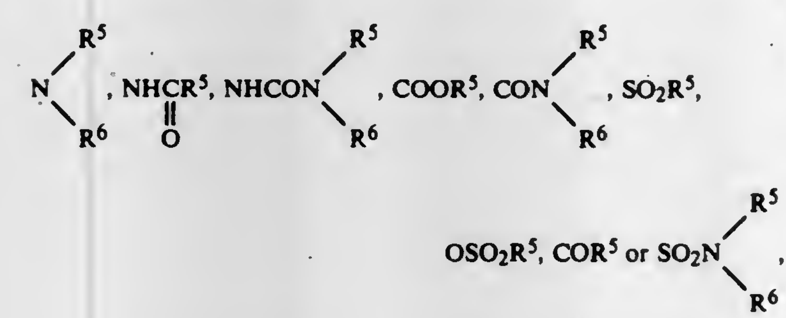

R^5 and R^6 being identical or different and each denoting hydrogen or having the meanings given for R^1, m denotes one of the integers 1, 2, 3 and 4, and n denotes one of the integers 1, 2, 3, 4 and 5.

4,373,106

SULFAMOYL-SUBSTITUTED PHENETHYLAMINE DERIVATIVES AND PROCESS OF PRODUCING THEM

Kazuo Imai, Omiya; Kunihiro Niigata, Ageo; Takashi Fujikura, Urawa; Shinichi Hashimoto, Matsudo, and Toichi Takenaka, Tokyo, all of Japan, assignors to Yamanouchi Pharmaceutical Co., Ltd., Tokyo, Japan

Filed Feb. 4, 1981, Ser. No. 231,421

Claims priority, application Japan, Feb. 8, 1980, 55-14382

Int. Cl.³ C07C *143/80*

U.S. Cl. 564—85 **13 Claims**

1. A process for producing sulfamoyl-substituted phenethylamine derivatives represented by the formula

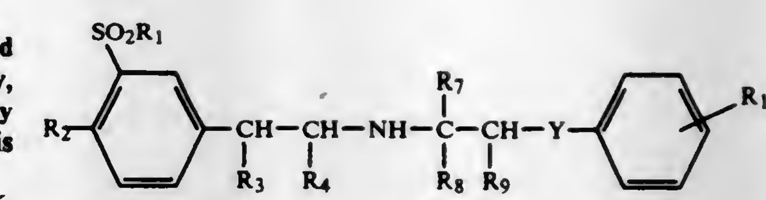

wherein R_1 represents an amino group or a mono- or di-lower alkylamino group; R_2 represents a hydroxyl group, a lower alkyl group, or a lower alkoxy group; R_3 represents a hydrogen atom, a halogen atom, a lower alkyl group, a lower alkoxy group, a phenylthio group, or a phenylsulfinyl group; R_4, R_7, R_8 and R_9 each represent a hydrogen atom or a lower alkyl group; R_{10} represents a hydrogen atom, a lower alkyl group, or a lower alkoxy group and Y represents an oxygen atom or a methylene group; said Y is an oxygen atom when R_2 is a hydroxyl group or the salts thereof which comprises condensing a compound represented by the formula

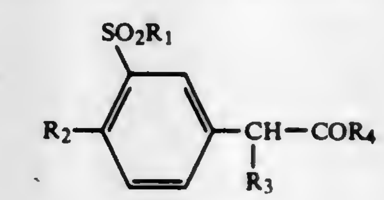

wherein R_1, R_2, R_3 and R_4 have the same significance as in the above formula

and a compound represented by the formula

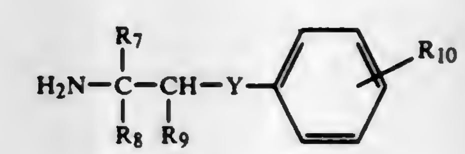

wherein R_7, R_8, R_9, R_{10} and Y have the same significance as in the above formula

and then reducing the condensation product.

2. A process for producing sulfamoyl-substituted phenethylamine derivatives represented by the formula

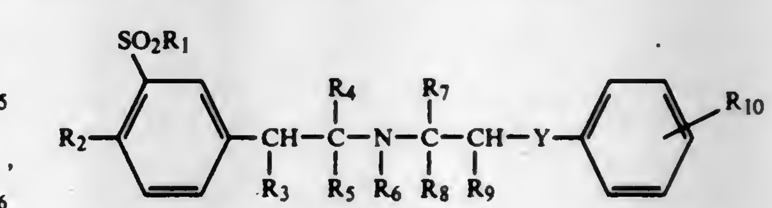

wherein R_1 represents an amino group or a mono- or di-lower alkylamino group; R_2 represents a hydroxyl group, a lower alkyl group or a lower alkoxy group; R_3 represents a chlorine or bromine atom; R_4, R_5, R_6, R_7, R_8 and R_9 each represent a hydrogen atom or a lower alkyl group; R_{10} represents a hydrogen atom, a lower alkyl group, or a lower alkoxy group; and Y represents an oxygen atom or a methylene group; said Y being an oxygen atom when R_2 is a hydroxyl group, or the salts thereof which comprises reacting a compound represented by the formula

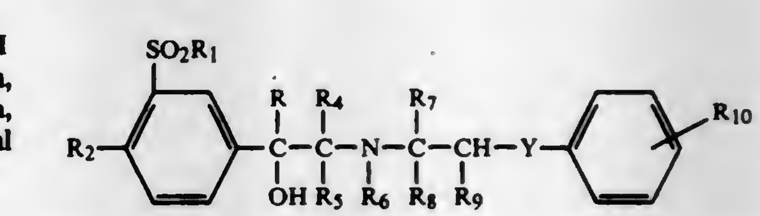

wherein R represents a hydrogen atom or a lower alkyl group and R_1, R_2, R_4, R_5, R_6, R_7, R_8, R_9, R_{10} and Y have the same significance as in the above formula with a chlorinating or brominating agent.

3. A process for producing sulfamoyl-substituted phenethylamine derivatives represented by the formula

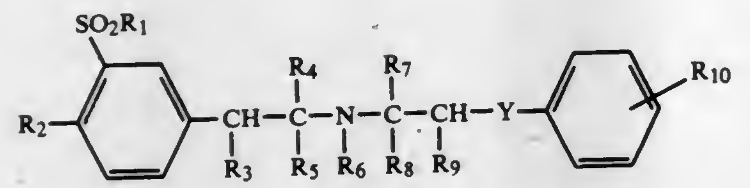

wherein R_1 represents an amino group or a mono- or di-lower alkylamino group; R_2 represents a hydroxy group, a lower alkyl group or a lower alkoxy group; R_3 represents a hydrogen atom or a lower alkyl group; R_4, R_5, R_6, R_7, R_8 and R_9 each represent a hydrogen atom or a lower alkyl group; R_{10} represents a hydrogen atom, a lower alkyl group, or a lower alkoxy group; and Y represents an oxygen atom or a methylene group; said Y being an oxygen atom when R_2 is a hydroxyl group, or the salts thereof which comprises reacting a compound represented by the formula

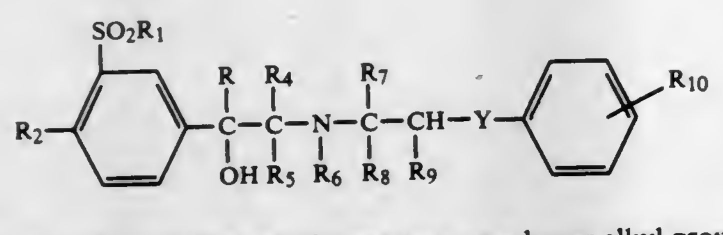

wherein R represents a hydrogen atom or a lower alkyl group and R_1, R_2, R_4, R_5, R_6, R_7, R_8, R_9, R_{10} and Y have the same significance as in the above formula with a halogenating agent and reducing the halogenated product.

10. The process for producing sulfamoyl-substituted phenethylamine derivatives represented by the formula

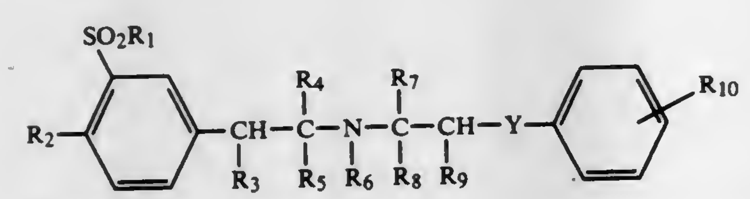

wherein R_1 represents an amino group or a mono- or di-lower alkylamino group; R_2 represents a hydroxyl group, a lower alkyl group or a lower alkoxy group; R_3 represents phenylsulfinyl; R_4, R_5, R_6, R_7, R_8 and R_9 each represent a hydrogen atom or a lower alkyl group; R_{10} represents a hydrogen atom, a lower alkyl group, or a lower alkoxy group; and Y represents an oxygen atom or a methylene group; said Y being an oxygen atom when R_2 is a hydroxyl group, or the salts thereof which comprises reacting a compound represented by the formula

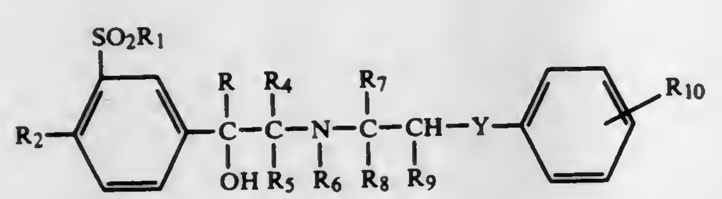

wherein R represents a hydrogen atom or a lower alkyl group and R_1, R_2, R_4, R_5, R_6, R_7, R_8, R_9, R_{10} and Y have the same significance as in the above formula with a halogenating agent to form a halogenated product, reacting said halogenated product with an alkaline material, reacting the product thus obtained with thiophenol, and oxidizing the resulting product.

4,373,107
PROCESS FOR PREPARING N-ALKYL-ALKYLENE-DIAMINES
Susumu Tahara; Keigo Nishihira; Takashi Miyatake; Hiroyuki Sawada, all of Ube, and Junichiro Kita, Ichihara, all of Japan, assignors to Ube Industries, Ltd., Ube, Japan
Filed Jul. 22, 1981, Ser. No. 286,030
Claims priority, application Japan, Aug. 13, 1980, 55/111590
Int. Cl.[3] C07C *85/08*
U.S. Cl. 564—473 **13 Claims**

1. In the process for preparing an N-alkyl-alkylene-diamine by contacting an alkylene diamine with an aliphatic aldehyde in a reaction solvent in the presence of hydrogen under pressure and a platinum group metal, the improvement which comprises gradually adding the aliphatic aldehyde to the alkylene diamine in the absence of an alkalene substance other than said diamine.

4,373,108
BRIDGED TRICYCLIC ALCOHOL, PROCESS FOR PREPARING SAME AND PERFUMERY USE THEREOF
Kenneth K. Light, North Ogden, Utah; Joseph A. McGhie, Montclair, N.J.; Futoshi Fujioka, Wanamassa, N.J., and Takao Yoshida, West Long Branch, N.J., assignors to International Flavors & Fragrances, Inc., New York, N.Y.
Continuation-in-part of Ser. No. 206,649, Nov. 13, 1980. This application Jul. 29, 1981, Ser. No. 287,939
Int. Cl.[3] C07C *35/22*
U.S. Cl. 568—817 **3 Claims**

N M R SPECTRUM FOR FRACTION 4 OF EXAMPLE I

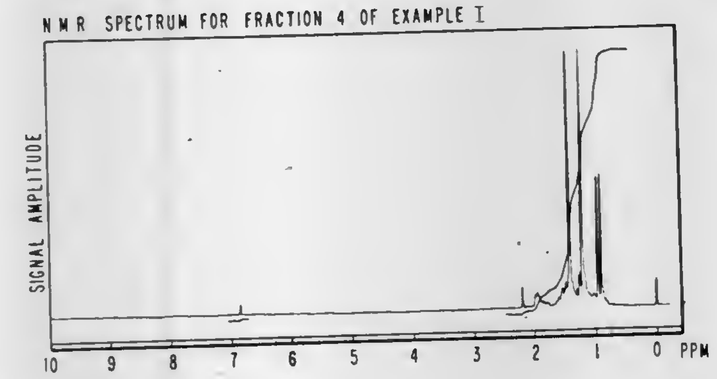

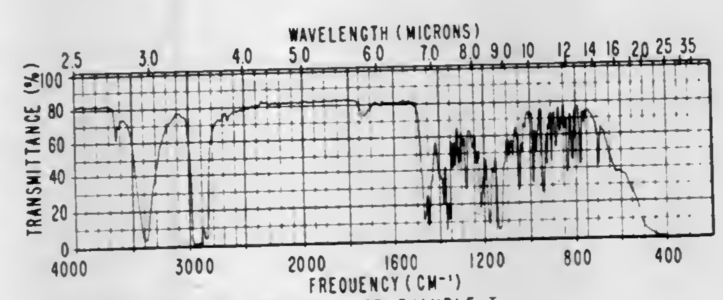

I R SPECTRUM FOR FRACTION 4 OF EXAMPLE I

1. The tricyclic compound defined according to the structure:

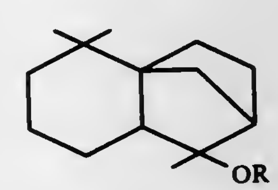

wherein "R" is hydrogen or lithium.

4,373,109
BIFUNCTIONAL ACID-BASE CATALYZED CONVERSION OF HETERO-SUBSTITUTED METHANES INTO OLEFINS
George A. Olah, 2252 Gloaming Way, Beverly Hills, Calif. 90210
Filed Aug. 5, 1981, Ser. No. 290,292
Int. Cl.[3] C07C *1/00*
U.S. Cl. 585—640 **17 Claims**

1. A process for the conversion of heterosubstituted methanes at a temperature of about 250° to 400° C. over a heterogeneous supported bifunctional acid-base catalyst comprising a halide, oxyhalide, oxide, sulfide or oxysulfide of a transition metal of Groups IV, V, VI, VIII of the Periodic Table supported on an acidic chalcogenide to produce a hydrocarbon mixture of predominantly lower C_2 to C_5 olefins.

4,373,110
HF ALKYLATION PROCESS AND APPARATUS
Thomas Hutson, Jr., Bartlesville, Okla., assignor to Phillips Petroleum Company, Bartlesville, Okla.
Filed Jan. 21, 1981, Ser. No. 226,589
Int. Cl.[3] C07C *2/56, 2/58, 2/62*
U.S. Cl. 585—719 **30 Claims**

1. A process comprising:

(a) providing a reaction mixture comprising hydrogen fluoride, isoparaffin, and the reaction products of isoparaffin and olefin in the presence of hydrogen fluoride;

(b) separating the reaction mixture into a first phase containing hydrocarbon as its major component and a second phase containing hydrogen fluoride as its major component and polymeric material as a minor component;

(c) withdrawing from the first phase a first stream containing hydrocarbon as its major component;

(d) withdrawing from the second phase a second stream containing hydrogen fluoride as its major component and polymeric material as a minor component;

(e) fractionating directly at least a portion of the second stream to form a third stream containing polymeric material as its major component;

(f) combining at least a portion of the third stream with at least a portion of the first stream, wherein the first stream is withdrawn from a first phase which was separated from the same or a different reaction mixture as the second phase; and

(g) separating from the combined at least a portion of the first stream and the at least a portion of the third stream a fourth stream containing the reaction products of isoparaffin and olefin as its major component.

4,373,111
SERVICE POLES

John L. Myers, Parkersburg; Richard D. Benscoter, Vienna, both of W. Va.; Bruce B. Chambers, Belpre, and Ralph E. Dyar, Marietta, both of Ohio, assignors to Butler Manufacturing Company, Kansas City, Mo.

Filed Apr. 21, 1980, Ser. No. 141,963
Int. Cl.^{3} H02G *3/04*

U.S. Cl. 174—48 **3 Claims**

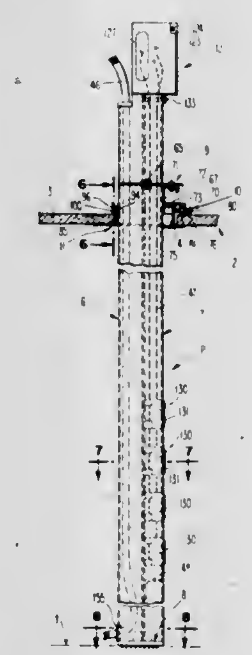

1. A service pole for supplying power and/or telephone outlets in a room of a building structure, the pole being adapted to extend between the floor and the ceiling of a room and the ceiling being the suspended type having means for supporting ceiling panels, the pole comprising:

an elongated, extruded aluminum frame formed with a pair of back-to-back channels, each channel having a base and a pair of spaced-apart parallel side walls extending away from the base and forming an opening, the respective openings facing outwardly in opposite directions and the base of each channel being common to one another;

in each channel, the inside of each side wall having an inner slot located adjacent the base to provide for flexing of the side wall, an outer slot located closely adjacent the outer end of the wall for use in mounting a cover for the channel and an intermediate slot being inboard of the second slot being for use mounting a receptacle retainer, the respective inner, outer and intermediate slots facing one another;

a pair of covers respectively removably mounted on said side walls and extending across the openings of said channels to close off the same and each said opening providing access to its channel with the cover removed and the channels and covers forming elongated compartments for carrying electrical conductors; and

each cover being removably mounted on the outer ends of the side walls by a pair of fingers disposed on the inside of the cover adjacent opposite edges and respectively engaged with the inside of said side walls and with said outer slots, the transverse dimension between the fingers being greater than the distance between the side wall whereby the side walls are outwardly flexed and provide inwardly directed force on the fingers for holding the cover in place.

4,373,112
CABLE HOLDER

Akira Mizuno, Fujisawa, Japan, assignor to Nikko Kogyo Kabushiki Kaisha, Tokyo, Japan

Filed Feb. 13, 1981, Ser. No. 235,161
Int. Cl.^{3} H02G *3/18*

U.S. Cl. 174—65 R **3 Claims**

1. A cable holder comprising a mounting body provided with a hollow cylinder, an insertable member having a flange on one end which can be slid into the cylinder through the cable-receiving end of the cylinder up to the point of said flange, and a clamper for clamping the part of the mounting body through which the insertable member is to be slid, said insertable member and the inner surface of said cylinder being made of an electrically insulating, resilient plastic material, wherein the part of the cylinder through which the insertable

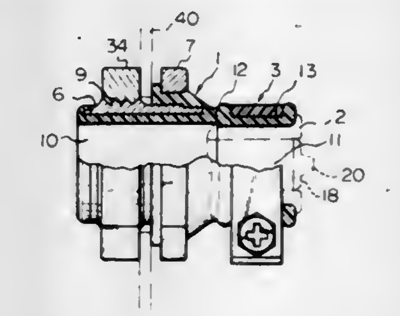

member is to be slid has an inside diameter smaller than that of the other part of the cylinder, forming a step on the boundary of the two parts of the cylinder, the other end of the insertable member being provided with a ring and inwardly adjacent annular groove, the diameter of said ring being slightly larger than the outer diameter of the insertable member and being equal to the inside diameter of the larger part of the cylinder.

4,373,113
HIGH-VOLTAGE POLYMERIC INSULATOR WITH SHEATH OF ELASTIC AND RIGID SEGMENTS AND METHOD OF MAKING SAME

Jerzy Winkler, and Jerzy Stankiewicz, both of Wroclaw, Poland, assignors to Instytut Elektrotechniki Oddzial Technologii i Materialoznawstwa Elektrotechnicznego, Wroclaw, Poland

Filed Sep. 11, 1980, Ser. No. 186,296
Claims priority, application Poland, Sep. 15, 1979, 218354
Int. Cl.^{3} H01B *17/02, 19/00*

U.S. Cl. 174—179 **5 Claims**

1. A high-voltage outdoor polymeric insulator comprising:

(a) a prefabricated rod of alkaline-free continuous glass filaments impregnated with epoxy resin, the ends of the rod being pressed into end fittings;

(b) at least two spacing sleeves made of elastic material and having a bead at each end of each spacing sleeve;

(c) an externally profiled sleeve made of rigid material and positioned between each two of said spacing sleeves so as to form alternating elastic and rigid segments of insulating sheath around said rod and to partly cover both spacing sleeves; wherein at least the bead at the end of each spacing sleeve is covered by the adjacent profiled sleeve, said bead interlocking with said profiled sleeve so as to preclude slippage of said profiled sleeve relative to said spacing sleeve; and wherein the bead at the end of a spacing sleeve adjacent to an end fitting interlocks with said end fitting.

5. A method of making a high-voltage outdoor polymeric

insulator having a sheath mounted onto a prefabricated glass-fiber rod comprising the steps of:

(a) first, surface-treating said rod with a silane adhesive agent;

(b) second, casting silicone rubber spacing sleeves with beads at the ends of said spacing sleeves, directly onto the rod at selected intervals by pressure-injection; and

(c) third, casting profiled sleeves in the spaces between said spacing sleeves so as to cover said beads and interlock therewith, said casting being carried out in a split mold by injection, wherein the material of said profiled sleeves is a cast epoxy composition consisting of cycloaliphatic epoxy resin, anhydride hardener, and an inorganic filler.

4,373,114

METHOD AND MEANS OF READING PUNCHED DATA TAPE

Wayne R. Herbst, Northbrook, Ill., assignor to Teletype Corporation, Skokie, Ill.

Filed Aug. 6, 1979, Ser. No. 64,257

Int. Cl.³ G06K *7/10;* G08C *9/06*

U.S. Cl. 178—17 D **3 Claims**

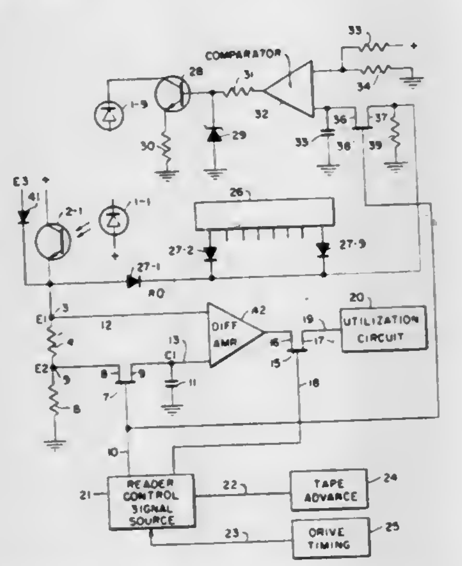

1. An arrangement for reading data stored in punched data tape which has a plurality of data positions along the length of the tape and webs of unpunched areas joining the successive data positions comprising: means for defining a reading position, means for periodically advancing the tape such that the data locations of the tape are brought into registration with said reading position; a source of light arranged to impinge upon the portion of said tape in said reading position, a light sensor assembly at said reading position to receive from said source light which passes through said tape, and means for generating output signals defining the presence and absence of holes at the data locations of said tape;

CHARACTERIZED IN THAT:

said means for generating output signals comprises: a voltage divider for generating first and second voltage signals each proportional to the amount of light impinging upon a corresponding light sensor, said second potential being less than said first potential; means for generating a Sample Hold signal when a data location of the punched data tape is in said reading position and a Go signal when a web portion of the tape is in said reading position, means for storing an analogue voltage signal, a first connecting means responsive to said Sample Hold signal for connecting the second voltage signal of said voltage divider to said storing means; a differential amplifier for generating an output signal at an output terminal thereof in accordance with the magnitudes of voltages applied to first and second input terminals thereof; means connecting the first voltage signal of said voltage divider to the first input terminal of said differential amplifier; and means connecting said storing means to the second input terminal of said differential amplifier; a utilization circuit for utilizing information obtained from said punched data tape, and a second connecting means responsive to said Go signal for connecting the output of said differential amplifier to the said utilization circuit when the input to the first input terminal of said differential amplifier is a first voltage signal corresponding to the opacity of the web immediately following a data location and the input to the second terminal of said differential amplifier is a second voltage signal from said storage means.

4,373,115

PREDICTIVE DISTORTION REDUCTION IN AM STEREO TRANSMITTERS

Leonard R. Kahn, 137 E. 36th St., New York, N.Y. 10016

Filed Aug. 18, 1980, Ser. No. 179,327

Int. Cl.³ H04H *5/00*

U.S. Cl. 179—1 GS **13 Claims**

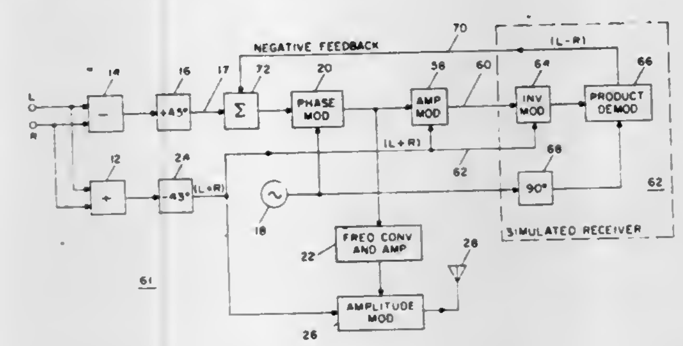

1. In apparatus for generating a composite AM stereo radio broadcast signal comprising a main carrier signal amplitude modulated with stereo sum information and angle modulated with stereo difference information, the improvement comprising:

means, including a simulated stereo receiver, for developing at the output of said simulated receiver a signal representing a prediction of the distortion which may arise from the transmission and reception of said composite signal and the demodulation of the angle-modulation component thereof;

and means for directly combining said predictive signal with a supplied stereo difference information bearing signal, to produce a modified stereo difference information bearing signal, for use in angle modulating a secondary carrier which is related to said main carrier, thereby to reduce said distortion.

4,373,116

VOICE TRIP INFORMATION SYSTEM FOR AN AUTOMOTIVE VEHICLE

Michiro Shimizu, Yokohama, and Masakazu Tsunoda, Fujisawa, both of Japan, assignors to Nissan Motor Company, Limited, Kanagawa, Japan

Filed Oct. 3, 1980, Ser. No. 193,815

Claims priority, application Japan, Oct. 4, 1979, 54-127353

Int. Cl.³ G10L *1/00*

U.S. Cl. 179—1 SM **7 Claims**

1. A voice trip information system for an automotive vehicle provided with an engine, which comprises:

(a) an ignition switch for outputting an ignition-on signal S_{ig} when turned on and an ignition off-signal when turned off;

(b) a speed sensor for detecting vehicle speed and for outputting a vehicle speed signal S_V;

(c) a fuel sensor for detecting an amount of fuel and for outputting a fuel amount signal S_f;

(d) a clock oscillator for outputting a clock signal S_i;

(e) an interface including interconnected waveform shapers, dividers, A-D converters, a multiplexer and latch circuits, said interface being connected to said ignition switch, said speed sensor, said fuel sensor, and said clock oscillator for waveform shaping the vehicle speed signal S_V to a rectangular pulse signal, dividing the shaped vehicle speed signal S_V into one pulse per predetermined distance to obtain a distance signal, converting the fuel amount signal S_f into a frequency signal corresponding thereto, and sequentially transferring the signals input thereto in a time-shared sequence;

(f) a voice synthesizing system including:

(1) a voice synthesizer;

(2) a memory unit connected to said voice synthesizer for temporarily storing voices synthesized thereby; and

(3) a control unit connected to said interface, said voice synthesizer and said memory unit, said control unit formed by a microcomputer having a central processing unit, a read only memory for storing programs and fixed data, and a random access memory;

(g) said control unit including means for outputting

first command signals, in response to the ignition-on signal S_{ig}, to said interface to read the vehicle speed signal S_V, the fuel amount signal S_f and the clock signal S_i, for storing of these signals as initial basic data,

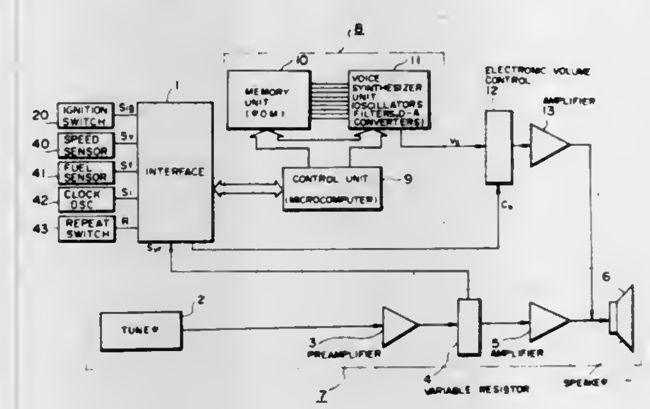

second command signals, in response to the ignition-off signal, to said interface to read the current vehicle speed signal S_V, the current fuel amount signal S_f and the current clock signal S_i, for calculating travel time based on the initial and current clock signals S_i; travel distance based on the distance signal obtained from the vehicle speed signals S_V; fuel consumed based on the initial and current fuel amount signals S_f, and fuel consumption rate based on the calculated travel distance and fuel consumed; and

third command signals to said voice synthesizer to determine a plurality of voice messages in accordance with the obtained travel time, travel distance, fuel consumed and fuel consumption rate and to output each of determined voice form messages after having temporarily stored each in said memory unit,

whereby travel time, travel distance, fuel consumed and fuel consumption rate are indicated, in voice form, when said ignition switch is turned off.

4,373,117

DC TO DC CONVERTER FOR LINE POWERED MODEM

O. Leon Pierce, Huntsville, Ala., assignor to Universal Data Systems, Inc., Huntsville, Ala.

Filed Nov. 3, 1980, Ser. No. 203,109

Int. Cl.³ H04M *19/00*

U.S. Cl. 179—2 DP **10 Claims**

1. A telephone line powered modem comprising:

a transmitter operative in response to data from a source to provide modulated data signals to the telephone line;

a receiver operative to provide data signals derived from signals received on the telephone line;

a power source operative in response to telephone line power to provide operating power for the transmitter and receiver while maintaining the current drawn from the telephone line and the voltage drop across the telephone line within specified limits;

an output interface coupled to the receiver and operative to provide output signals compatible with utilization equipment coupled to the modem output; and

converter means including a source of unbalanced square wave signals energizing the converter operative to pro-

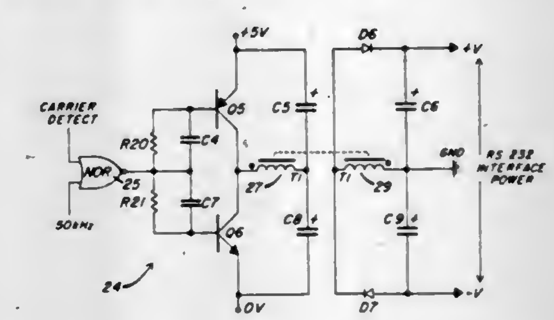

vide predetermined unbalanced output voltages for operation of the output interface.

4,373,118

BATTERY FEED CIRCUIT

Richard James Cubbison, Jr., Littleton, Colo., assignor to Bell Telephone Laboratories, Incorporated, Murray Hill, N.J.

Filed Jun. 8, 1981, Ser. No. 271,604

Int. Cl.³ H04M *19/00*

U.S. Cl. 179—77 **9 Claims**

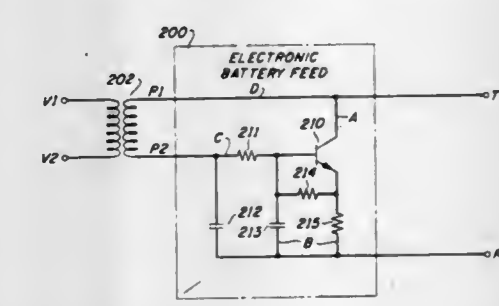

1. An electronic battery feed circuit (**200**) for interfacing one winding of a voice transformer (**202**) having first (P1) and second (P2) terminals with first (T) and second (R) leads respectively of a communication pair, comprising:

dc blocking means (**212**) connected between said second terminal (P2) of said voice transformer (**202**) and said second lead (R) of said communication pair for providing a low ac impedance and high dc impedance path therebetween;

connecting means (D) for directly connecting said first terminal (P1) of said voice transformer (**202**) to said first lead (T) of said communication pair;

current sink means (**210, 211, 213–215**) having input (A) and output (B) terminals connected respectively to said first (T) and said second (R) leads of said communication pair, and having a control terminal (C) wherein said current sink means (**210, 211, 213–215**) is responsive to the application of a bias current to said control terminal (C) for providing a low dc impedance, high ac impedance path between said input (A) and said output (B) terminals; and

wherein said control terminal (C) is directly connected to said second terminal (P2) of said voice transformer (**202**) for obtaining said bias current from said voice transformer (**202**).

4,373,119

ADJUSTABLE TRANSDUCER

Alvin Feder, Lauderhill, Fla., assignor to Motorola, Inc., Schaumburg, Ill.

Filed Dec. 5, 1980, Ser. No. 213,425

Int. Cl.³ H04R *17/00*

U.S. Cl. 179—110 A **6 Claims**

1. An adjustable transducer apparatus comprising:

a saucer-shaped housing with two inner concentric ridges;

a planar cover plate, the outer rim of which rests on the outer ridge of the two concentric ridges;

a metal plate;
a transducer element fixedly mounted on the center of the metal plate, the rim of said metal plate resting on the inner ridge of the two concentric ridges;
an "O" ring disposed in the housing between the planar cover plate and the metal plate and opposite the inner ridge for holding the metal plate against the housing; and

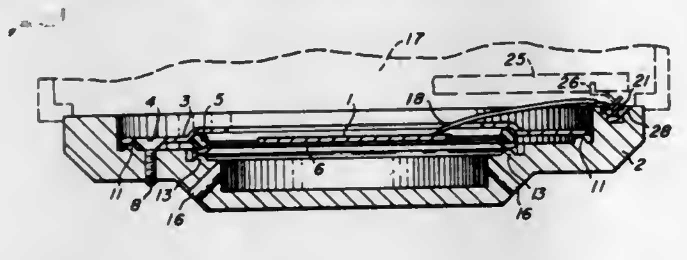

a plurality of screws for adjustably fastening the planar cover plate against the housing at intermediate points between the outer and inner ridges so that the planar cover plate is pivoted about the outer ridge to produce compression on the "O" ring and said "O" ring transmitting pressure to the metal plate of the transducer, wherein the alertness of the transducer is obtained by adjusting the screws.

4,373,120
LINE TEST TERMINATION DEVICE
Gerald F. McDonald, Babylon, N.Y., assignor to TII Industries Inc., Copiague, N.Y.
Filed Jan. 13, 1981, Ser. No. 224,680
Int. Cl.³ H04M *1/24*
U.S. Cl. 179—175 **9 Claims**

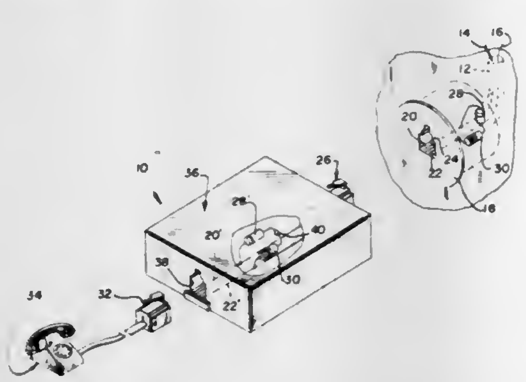

1. A line test termination device for providing a characteristic signature to the telephone central office when a continuity test is made on a subscriber line having a pair of electrically conductive paths comprising:
(a) a resistor;
(b) a diode connected in series with said resistor from one of said electrically conductive paths to the other of said electrically conductive paths; and
(c) a housing adapted to receive a telephone instrument plug therein and continue the electrically conductive paths to said telephone instrument, said resistor and said diode being disposed in said housing.

4,373,121
MAINTENANCE TERMINATION DEVICE
Eugene F. Sartori, Madison, and Francis J. Uhrhane, Cedar Knolls, both of N.J., assignors to Bell Telephone Laboratories, Incorporated, Murray Hill, N.J.
Filed Jun. 15, 1981, Ser. No. 273,975
Int. Cl.³ H04B *3/46*
U.S. Cl. 179—175.3 F **9 Claims**

1. A fault locating circuit (22) in a subscriber loop comprising a plurality of conductors (11,13) connecting a central office (12) with terminal equipment (16) for determining whether said fault is located on the central office side or the terminal equipment side of said locating circuit, said locating circuit comprising
a plurality of voltage sensitive devices (30,40), each of said voltage sensitive devices being connected in series with one of said loop conductors between said central office and said terminal equipment, and

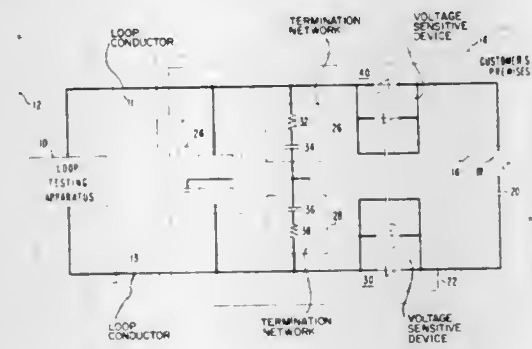

a termination network comprising a plurality of substantially identical impedance termination networks (26,28), each of said impedance termination networks being connected permanently between different ones of said subscriber loop conductors (11,13) and ground on the central office side of said plurality of voltage sensitive devices.

4,373,122
CAPACITANCE SWITCH
Norman J. Frame, Whitefish Bay, Wis., assignor to W. H. Brady Co., Milwaukee, Wis.
Continuation-in-part of Ser. No. 237,098, Feb. 23, 1981, abandoned, which is a continuation-in-part of Ser. No. 228,118, Jan. 26, 1981. This application Oct. 16, 1981, Ser. No. 311,915
The portion of the term of this patent subsequent to Jan. 4, 2000, has been disclaimed.
Int. Cl.³ H01H *9/00, 13/02*
U.S. Cl. 200—159 B **5 Claims**

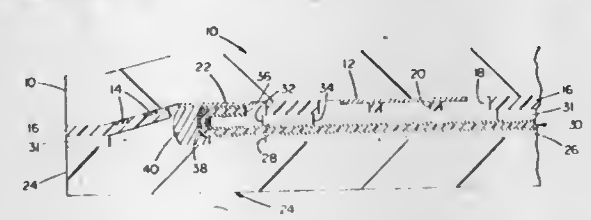

1. A membrane capacitance switch wherein switch activation produces a change in capacitance detectable by external circuitry, comprising:
a substrate sheet,
a flexible sheet extending over said substrate sheet,
a conductive contact carried by one of said substrate sheet and said flexible sheet,
a capacitance element located between said substrate sheet and said flexible sheet and aligned with said contact,
said capacitance element comprising
an inner insulating layer and
first and second outer conductive portions on opposite surfaces of said inner insulating layer,
said capacitance element forming a first capacitor,
spacing means for spacing said capacitance element from said contact so as to provide an insulating zone between said contact and said first conductive portion,
said contact, insulating zone, and first conductive portion being adapted to form a second capacitor electrically in series with said first capacitor,
said flexible sheet, spacing means, contact, and first conductive portion all being adapted and located to cause the spacing between said contact and first conductive portion to vary when said flexible sheet is flexed during switch activation and to thereby cause the net capacitance of said first and second capacitors to change to an extent detachable by external circuitry,
said spacing means including a spacer layer occupying the space between said flexible layer and said capacitance element, and
said capacitance spacing element being bent around said spacer in a fold portion at an end thereof.

4,373,123
STUDDED MOUNTING STRUCTURE FOR SWITCH
Syng N. Kim, Hoffman Estates, Ill., assignor to Wico Corporation, Niles, Ill.
Filed Apr. 12, 1982, Ser. No. 367,290
Int. Cl.³ H01H *1/26, 13/52*
U.S. Cl. 200—159 A **7 Claims**

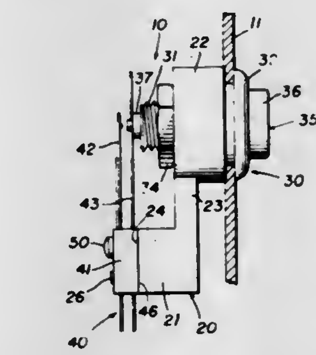

1. The combination comprising mounting structure including a block of unitary one-piece construction having a neck with a mounting collar at the distal end thereof and a block surface and a block bore extending into said block surface and a stud protruding from said block surface, the axes of said block bore and said stud being substantially parallel; a leaf spring switch having a body and first and second elongated leaf springs carried thereby, said body having a body surface and a pair of substantially parallel body bores spaced apart a distance equal to the distance between said stud and said block bore, said surfaces being in juxtaposition, with said stud extending into one of said body bores; and a threaded fastener extending through the other of said body bores into said block bore.

4,373,124
CAPACITANCE SWITCH
Norman J. Frame, Whitefish Bay, Wis., assignor to W. H. Brady Co., Milwaukee, Wis.
Continuation of Ser. No. 237,098, Feb. 23, 1981, abandoned, which is a continuation-in-part of Ser. No. 228,118, Jan. 26, 1981. This application May 11, 1982, Ser. No. 377,264
The portion of the term of this patent subsequent to Jan. 4, 2000, has been disclaimed.
Int. Cl.³ H01H *9/00, 13/02*
U.S. Cl. 200—159 B **3 Claims**

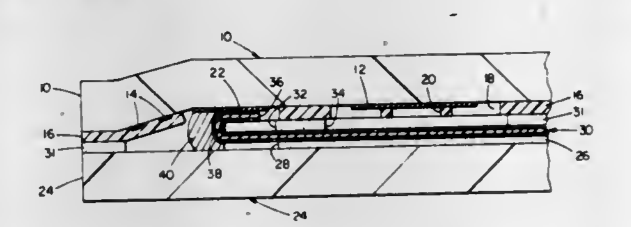

1. A capacitance switch wherein switch activation produces a change in capacitance detectable by external circuitry, comprising:
a substrate,
a movable layer extending over said substrate,
a plurality of conductive contacts carried by one of said substrate and said movable layer, said contacts defining a plurality of switch zones,
a capacitance element located between said substrate and said movable layer and extending through said plurality of switch zones,
said capacitance element comprising
an inner insulating layer and
first and second outer conductive portions on opposite surfaces of said inner insulating layer,
said capacitance element forming a first capacitor,
spacing means for spacing said capacitance element from each said contact so as to provide insulating zones between each said contact and said first conductive portion,
said contacts, insulating zones, and first conductive portion being adapted to form a plurality of second capacitors each electrically in series with said first capacitor,
said movable layer, spacing means, contacts, and first conductive portion all being adapted and located to cause the spacing between a selected said contact and first conductive portion to vary when said movable layer is moved during switch activation and to thereby cause the net capacitance of said first capacitor and the selected second capacitor to change to an extent detectable by external circuitry, and
said spacing means including one or more spacing elements occupying the space between said movable layer and said capacitance element.

4,373,125
APPARATUS FOR WELDING PIPES
Gasparas Kazlauskas, North Hollywood, Calif., assignor to Astro-Arc Company, Sun Valley, Calif.
Filed Jul. 22, 1977, Ser. No. 817,999
Int. Cl.² B23K *37/02*
U.S. Cl. 219—60 A **6 Claims**

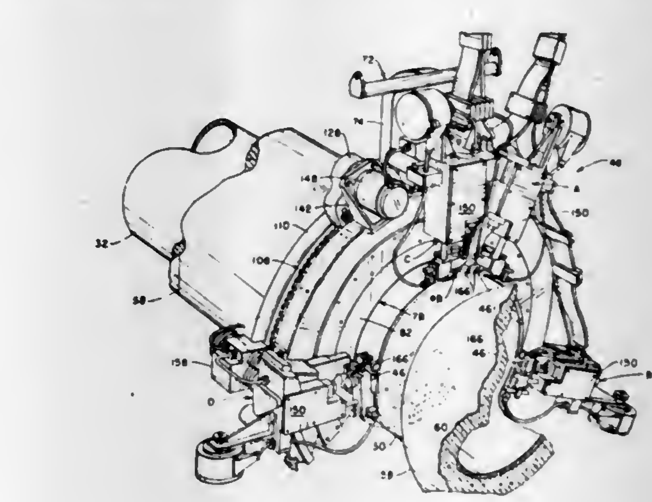

1. An automatic pipe welder comprising:
guide means adapted to be fixedly secured to a pipe assembly;
a carriage assembly connected to said guide means, said carriage assembly including a first carriage and a second carriage located in a spaced apart arrangement, both said first carriage and said second carriage being movable in respect to said guide means;
motor means interconnecting said guide means and said carriage assembly for moving said first and said second carriages, a driving means connected to said guide means and located between said first carriage and said second carriage, said motor means connected with said driving means;
welding torch means connected to said carriage assembly, said welding torch means including a first torch assembly and a second torch assembly, said first torch assembly being connected to said first carriage, said second torch assembly being connected to said second carriage, said

first torch assembly being movable in a one hundred and eighty degree arc with said second torch assembly being movable in a separate one hundred and eighty degree arc and both said arcs being in the same plance thereby forming a continuous circle; upright post means located between said first carriage and said second carriage, said driving means comprising a driving chain attached to said upright post means.

4,373,126

PROCESS FOR ELIMINATING ERRORS IN PREPOSITIONING PIECES TO BE MANUFACTURED BY ELECTRO-EROSION

Franz Schilling, Saint Remy les Chevreuse, France, assignor to Sfena, Velizy Villacoublay, France

Filed Jan. 3, 1980, Ser. No. 110,111

Claims priority, application France, Jan. 11, 1979, 79 00601

Int. Cl.³ B23P *1/08*

U.S. Cl. 219—69 M **6 Claims**

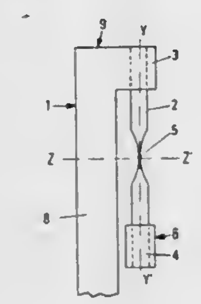

1. A process for forming an integral hinge in the form of a flexible suspension blade in a rod by electro-erosion machining, said rod attached at one end thereof to a frame having three plane surfaces disposed at right angles to one another, comprising the steps of positioning curved electro-erosion electrodes accurately by means of coordinates formed with respect to said plane surfaces and,

repeatedly eroding the rod alternately on two opposite sides symmetrically disposed about the axis of the rod so that the rod becomes progressively narrowed at this point in the form of two opposing inwardly curved indentations until the required thickness of the hinge is obtained wherein said integral hinge is formed at a portion along the length of the rod.

4,373,127

EDM ELECTRODES

Thomas E. Haskett, Oakdale, and Joseph J. Schmitt, White Bear Lake, both of Minn., assignors to Minnesota Mining and Manufacturing Company, St. Paul, Minn.

Filed Feb. 6, 1980, Ser. No. 119,164

Int. Cl.³ B23P *1/08, 1/04*

U.S. Cl. 219—69 E **19 Claims**

1. A shaped, electrical discharge machining electrode, consisting essentially of:

(1) a monolithic skeleton consisting essentially of (a) granules of carbon and (b) granules of a refractory material selected from the group consisting of tungsten, molybdenum, carbides of these two metals and stoichiometric and hyperstoichiometric carbides of the other elements of groups IVB, VB, and VIB of the Periodic Table of the Elements, the majority of said carbon granules being greater than about one micrometer in mean diameter, said refractory material being wettable by molten copper or silver, said carbon granules and said refractory granules being interconnected at their contiguous points of contact; and

(2) a continuous phase consisting essentially of copper, silver, or alloys containing copper or silver, and occupying the connected porosity in said skeleton;

wherein the volume percent of said carbon, said refractory, and said continuous phase are on or within the boundaries DEFG of FIG. 7, and the fraction expressed by the formula

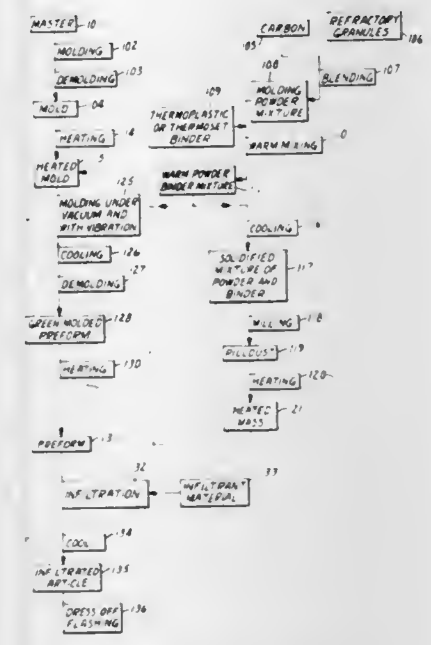

$$\frac{(\text{volume \% C})\ (\text{surface area C})}{(\text{volume \% } R)\ (\text{surface area } R)}$$

wherein C is said carbon, R is said refractory, the volume percent terms are the fraction of said electrode occupied by C or R, and the surface area terms are the surface areas in m^2/g of said carbon or refractory granules measured before said carbon or refractory granules are used in making said electrode, is less than about 75, said electrode thereby being a monolithic structure consisting essentially of two intermeshed matrices, being substantially free of voids, and being substantially free of materials which are soluble in said continuous phase and reactive with carbon.

4,373,128

METHOD OF ELECTROSLAG SURFACING OF COMPONENTS HAVING A CYLINDRICAL SURFACE

Yoshihiko Asai; Masao Hori, both of Kitakyushu, and Naoki Tokumitsu, Kawasaki, all of Japan, assignors to Nippon Steel Corporation, Tokyo, Japan

Filed Dec. 29, 1980, Ser. No. 220,725

Claims priority, application Japan, Dec. 29, 1979, 54-172596; Aug. 12, 1980, 55-109873

Int. Cl.³ B23K *9/04, 25/00*

U.S. Cl. 219—73.11 **11 Claims**

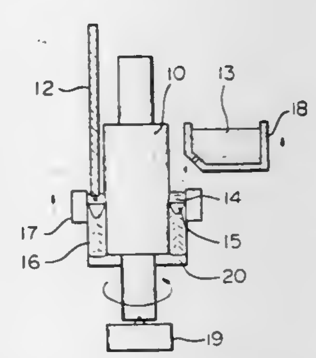

1. A method of surfacing a metal component having a cylindrical surface by an electroslag surfacing method, comprising:

placing the component in a vertical position;

placing a mold member around the lower end of the component with the inner surface of the mold spaced a distance from the cylindrical surface of the component to define a gap equal to the thickness of the surfacing;

forming a molten metal pool having a metal composition of the metal to be applied to the component between the mold member and the cylindrical surface with a slag layer over the upper surface of the pool;

inserting a plurality of consumable electrodes each having a composition corresponding to the metal to be applied to the component and each of which is in the form of a bar having a large cross-section into the molten metal pool and spaced between the mold member and the cylindrical surface and at intervals in the circumferential direction of the mold;

supplying a multi-phase alternating current power to said electrodes and said component;

while thus supplying power, raising the mold, the molten metal pool and the electrodes vertically and parallel to the cylindrical surface and at the time rotating the component around the vertical cylindrical axis thereof; and

continuously adding molten metal having a composition corresponding to the metal to be applied to the component to the surface of the slag layer on the molten metal pool.

4,373,129

APPARATUS FOR ASSEMBLING AND WELDING VENTED CELL COVERS

Raymond K. Sugalski; Kenneth C. Leduc, both of Gainesville, and Jesse L. Morris, Archer, all of Fla., assignors to General Electric Company, Gainesville, Fla.

Continuation of Ser. No. 921,208, Jul. 3, 1978. This application Jul. 30, 1980, Ser. No. 173,868

Int. Cl.³ B23K *11/32;* **B23P** *21/00*

U.S. Cl. 219—79 **5 Claims**

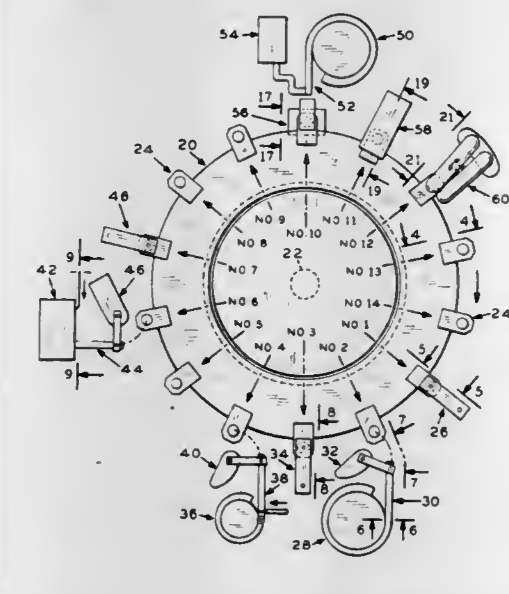

1. An apparatus for assembling and welding into a composite unit the component parts of a vented cover for electrochemical cells, said apparatus including a carousel, receptacles fixed on said carousel, and stations around said carousel; means at respective ones of said stations for feeding to said receptacles the component parts of a cover to be assembled, one of said stations including means for forming a spring coil from wire fed to said station; said coil forming means comprising;

a coiling post;

means for retracting said coiling post upon the conclusion of a winding of a spring coil;

a chute disposed beneath said post and extending upwardly toward the site of said spring coil for contacting a base of said coil upon a retracting of said post, said coil dropping into said chute upon said retraction of said post;

said chute being curved for reorienting said coil from a horizontal orientation to a vertical orientation upon a feeding of said coil to said receptacle; and wherein

said apparatus further comprises a vacuum operated nozzle having an interior surface configured for mating with said spring coil, said coil being lifted from a receptacle and depositioned within a cover member by activation and release of vacuum; and means at a following station for welding the assembled component cover parts.

4,373,130

CONCEALED ELECTRIC HEATING ELEMENT ARRANGEMENT FOR VEHICLE WINDSHIELDS

Gottfried Krasborn, Aachen; Paul Roentgen, Rott-Roetgen; Wilhelm Meier, Kohlscheid, and Josef Erdweg, Aachen, all of Fed. Rep. of Germany, assignors to Saint-Gobain Vitrage, France

Filed Jan. 21, 1980, Ser. No. 114,079

Claims priority, application Fed. Rep. of Germany, Jan. 24, 1979, 2902748

Int. Cl.³ H05B *3/26;* **A47L** *1/16*

U.S. Cl. 219—203 **14 Claims**

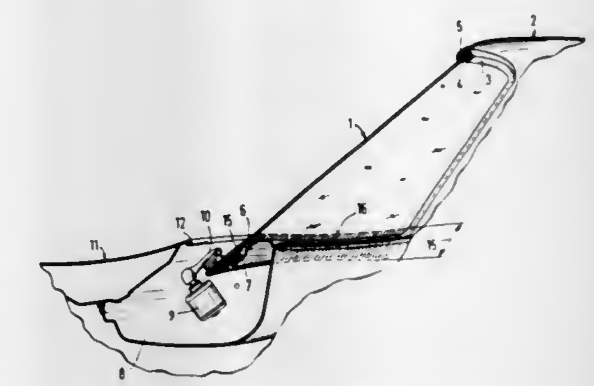

1. A windshield for motor vehicles characterized by a transparent panel defining a vehicle windshield having an upper region normally within the driver's field of vision and a lower region normally not within the driver's field of vision, an electric resistance heating means for heating said lower region, said heating means carried by said windshield only on said lower region, and a continuous layer of material opaque to ambient light and of a size at least coextensive with the area of said heating means within said lower region, said continuous layer also carried by said windshield in position so that said heating means is not visible from the front of said windshield, and said material being formed of a heat radiation absorbing substance.

4,373,131

APPARATUS FOR FLASH FUSING TUNER IMAGES

Wei C. Lu, Rochester, N.Y., assignor to Eastman Kodak Company, Rochester, N.Y.

Division of Ser. No. 189,492, Sep. 22, 1980, Pat. No. 4,341,854. This application Mar. 4, 1982, Ser. No. 354,877

Int. Cl.³ H05B *1/02*

U.S. Cl. 219—216 **3 Claims**

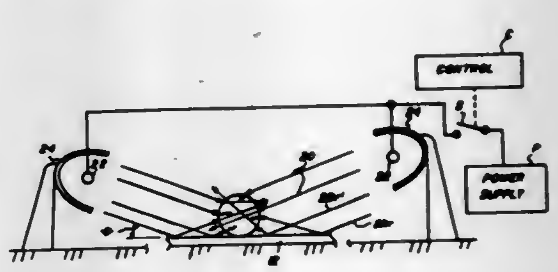

1. Apparatus for fusing dry resinous marking particles on the surface of an energy reflective receiver member, said apparatus comprising:

means for producing radiant energy capable of at least partially melting said dry resinous marking particles;

means for supporting said radiant energy producing means with respect to said receiver member so that the radiant energy striking the marking particles and the receiver member from opposite sides is directed toward the surface

of said receiver member along a path having a major low-angle component relative to the receiver member; and
means for activating said radiant energy producing means to sufficiently irradiate a substantial portion of the surface area of the marking particles with radiant energy which has not been reflected by the receiver member and with radiant energy which has been reflected by the receiver member to fuse the marking particles to each other and to the surface of the receiver member.

4,373,132
EXTERNAL/INTERNAL HEATER FOR MOLDING OF PLASTICS
Haig Vartanian, 817 Ashbourne Rd., Cheltenham, Pa. 19012
Filed Aug. 5, 1981, Ser. No. 290,140
Int. Cl.³ F27B *14/00;* **B29F** *1/03*
U.S. Cl. 219—421 **6 Claims**

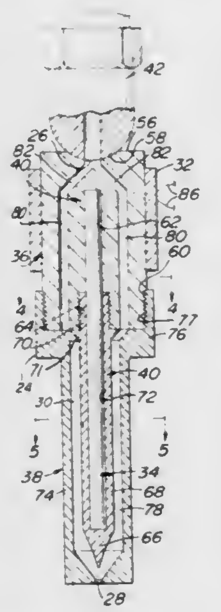

1. A readily assemblable and disassemblable injection molding nozzle for carrying a viscous material to a mold and comprising a body, resistance heating means and elongated heat pipe means, said body having a longitudinal central axis and comprising a cylindrical shank member, a cylindrical bushing member and a cylindrical probe member, said shank member having an upper end including a central inlet located on said axis, said bushing member having a lower end including a central outlet located on said axis, said shank member being formed of a good thermally conductive material and having an outer sidewall surface, first passageway means in fluid communication with said inlet and disposed uniformly radially about said axis and second passageway means extending generally parallel to said axis and disposed at equadistantly spaced locations thereabout, said bushing member having a hollow interior portion and being releasably secured to said shank member, said probe member being connected to said shank member and having an elongated end portion disposed within the hollow interior of said bushing member to define an annular passageway therebetween, said annular passageway extending about said axis and being in fluid communication with said second passageway means and said outlet, said elongated heat pipe means being disposed along said axis and extending through said shank member and said probe member from a first point immediately adjacent said inlet to a second point immediately adjacent said outlet, with said first and second passageway means and said annular passageway means disposed uniformly about said heat pipe along its entire length, said resistance heating means comprising a band disposed about and secured to the outer sidewall surface of said shank member so that heat is conducted from said resistance heating means through said shank member to said heat pipe and therealong, whereupon when a viscous material is introduced into said inlet it flows for uniform distribution about said elongated heat pipe for heating thereby until said material exits said nozzle through said outlet.

4,373,133
METHOD FOR PRODUCING A BILL, APPARATUS FOR COLLECTING ITEMS, AND A SELF-SERVICE SHOP
Nicholas Clyne, 152 Queen's Park Rd.; Philip L. Sturgeon, 58, Southdown Ave., and Lawrence H. Wright, 144 Tivoli Crescent North, all of Brighton, Sussex, England
Filed Dec. 30, 1980, Ser. No. 221,309
Claims priority, application United Kingdom, Jan. 3, 1980, 8000222
Int. Cl.³ G06F *15/84;* **G06K** *19/06*
U.S. Cl. 235—383 **5 Claims**

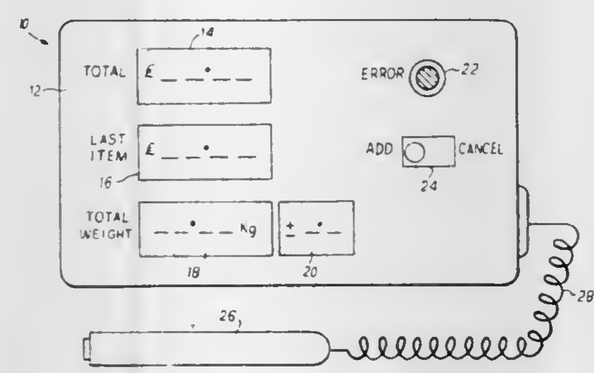

1. A self-service shop comprising
(a) a plurality of storage locations for items to be bought by customers,
(b) a plurality of movable receptacles for use by customers to form a collection of items to be bought by selection from said storage locations,
(c) a plurality of movable electronic recording units associated with said movable receptables, each said unit comprising (i) a memory store programmed, arranged and adapted to record at least data identifying the items selected by a customer for inclusion in said collection (ii) means for inputting to said recording unit information identifying the selected items, (iii) price summing means for summing, on the basis of the said information input into said electronic recording unit, the price of each selected item so as to provide an aggregate price indication for the collection and (iv) means for visually displaying said aggregate price indication to the customer while the collection is being formed,
(d) weight summing means for summing the gross weight of each selected item recorded in a said memory store to provide an aggregate gross weight indication for the collection, and
(e) at least one check-out station including means for weighing the collection of items made by a customer to provide a measured gross wieght indication for the collection, which can then be compared with the summed aggregate gross weight.

4,373,134
MAGNETIC CARD VOTE CASTING SYSTEM
Phillip F. Grace, 8701 Belleville Rd., Van Buren, Mich. 48111, and Howard A. Estes, Jr., 2523 Meade Ct., Ann Arbor, Mich. 48105
Filed May 6, 1981, Ser. No. 260,893
Int. Cl.³ G06K *3/00;* **G07C** *13/00*
U.S. Cl. 235—386 **4 Claims**

1. Voting apparatus, comprising:
a portable voter's registration card having magnetic means thereon and magnetically encoded voter identification on said magnetic means;
a recording machine having means for selectively magnetically recording a voter's selections on said magnetic means;

a vote-casting machine having a memory including means for receiving and supporting the card in a reading position and means for reading the vote selections into said memory;
said vote-casting apparatus having memory means having

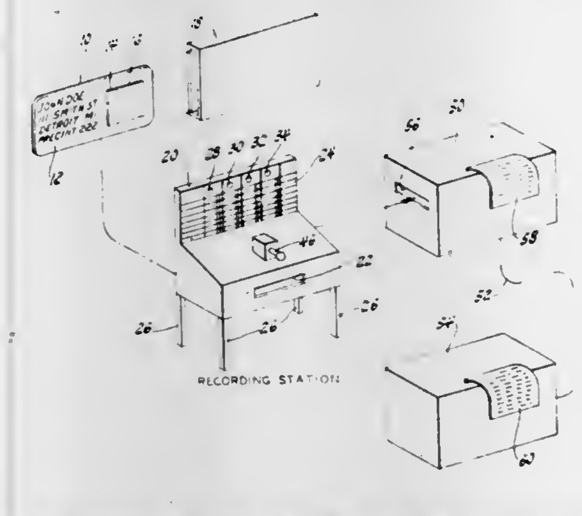

stored therein a vote identification record for comparing information on the card and for rejecting the card if the identification record does not match with the identification information; and
means for producing a hard copy output compilation of the selections read by the vote-casting apparatus.

4,373,135
PITCH MATCHING DETECTING AND COUNTING SYSTEM
William L. Mohan; Samuel P. Willits, both of Barrington, and Thomas E. Kleeman, Elgin, all of Ill., assignors to Spartanics, Ltd., Rolling Meadows, Ill.
Filed Dec. 31, 1979, Ser. No. 108,548
Int. Cl.³ G06M *9/00*
U.S. Cl. 377—8 **34 Claims**

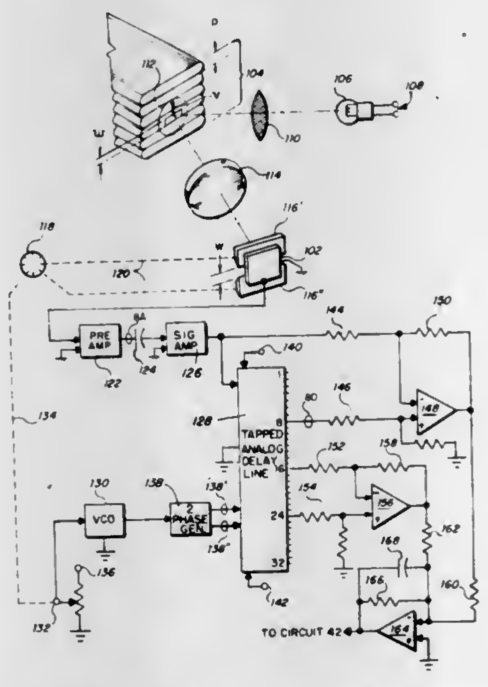

1. Improved apparatus for counting the quantity of a plurality of similar objects stacked adjacent one another comprising
sensor means having an effective width less than the thickness of each of said similar objects, frame means supporting said sensor means for enabling relative movement at velocity v between said sensor means and said similar objects to thereby generate sensor output signals indicative of said quantity,
reference voltage source means having a variable output voltage,
adjustable clock means connected at its input to said reference voltage source means and responsive to the voltage thereof to generate clock pulses at its output whose frequency is a fixed multiple of sensor output counting data frequency,
discrete time processor means coupled at its input to the output of said sensor means and to said clock means and adapted to generate one or more synthesized output signals that are sequentially time delayed with respect to each other in accord with said clock pulses and proportional to said sensor output signals,
means for summing said synthesized output signals to provide summed outputs that are the equivalent to the outputs of one or more pitch-matched sensor means, and
signal processing and counting means connected to said summing means and responsive to the summed outputs therefrom to count said quantity of stacked objects.

4,373,136
FIRE AND EXPLOSION DETECTION
David N. Ball, Slough, England, assignor to Graviner Limited, High Wycombe, England
Filed Jul. 7, 1980, Ser. No. 166,559
Claims priority, application United Kingdom, Jan. 17, 1980, 8001655
Int. Cl.³ G01J *1/00*
U.S. Cl. 250—339 **9 Claims**

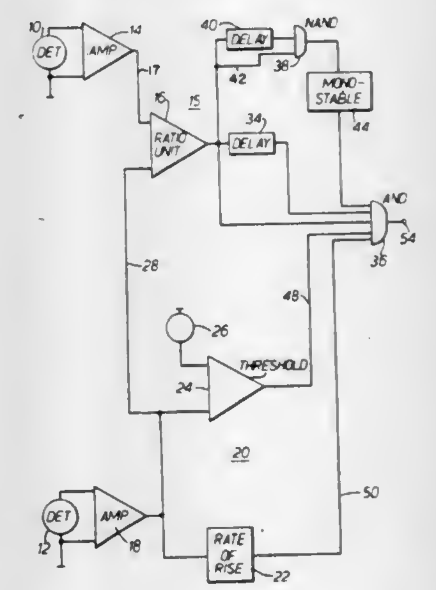

6. A fire and explosion detection system for discriminating between radiation produced by a hydrocarbon fire or explosion and radiation produced by a metal fire, comprising
two radiation detecting means,
means operatively associated with the two radiation detecting means to constrain them to be respectively responsive to the intensity of radiation in different and spaced apart narrow wavelength bands whereby the radiation detecting means produce respective electrical outputs in dependence on the radiation received,
means responsive to at least one said electrical output to produce a first signal when at least one of the two parameters consisting of the intensity of the radiation received by the corresponding detecting means and the rate of rise of the intensity of the radiation received by the corresponding detecting means exceeds a predetermined value,
ratio means responsive to the two electrical outputs to measure the ratio of the intensities of the radiation respectively received by the two detecting means,
one said wavelength band including a wavelength at which there is a characteristic emission line of a hydrocarbon flame and low emission of radiation by a metal fire and the other said band including a wavelength at which there is a peak emission in the radiation of a metal fire and low emission of radiation by a hydrocarbon flame, whereby to maximise the difference between the said ratio as measured in the presence of a hydrocarbon fire and the said

ratio as measured in the presence of a metal fire, the ratio means being responsive to the said ratio to produce a second signal when the ratio indicates that the source of radiation is a metal fire, and

output means connected to receive the first and second signals and operative to produce a fire and explosion indicating output only when the first signal exists in the absence of the second signal.

4,373,137
RADIATION DETECTION AND RECEIVING IN NONDISPERSIVE INFRARED GAS ANALYZER
Walter Fabinski, Kriftel; Udo Deptolla, Ober-Olm, and Margareta Ascherfeld, Oberursel, all of Fed. Rep. of Germany, assignors to Hartmann & Braun Aktiengesellschaft, Frankfurt am Main, Fed. Rep. of Germany
Filed Jun. 13, 1980, Ser. No. 159,115
Claims priority, application Fed. Rep. of Germany, Jun. 20, 1979, 2924843
Int. Cl.³ G01J *1/00*
U.S. Cl. 250—343 **3 Claims**

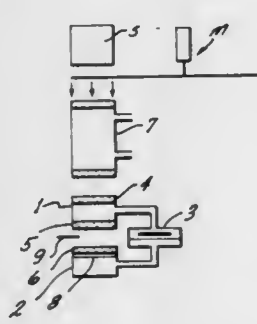

1. In a nondispersive infrared gas analyzer having at least one path for a periodically interrupted beam of infrared radiation traversing a chamber for sample gas which contains a particular component to be detected as well as an interfering component, the analyzer further including a differential pressure-measuring chamber with capacitive pickup, one of the electrodes of the pickup being a flexible membrane partitioning the differential pressure-measuring chamber, the improvement comprising in combination:

a front detection chamber and a rear detection chamber disposed in said path downstream from said sample gas chamber and being serially traversed by radiation, the front chamber and rear chamber being connected to the differential measuring-chamber at opposite sides of the membrane, the front and rear chambers being filled with said particular component, one of the front and rear chambers containing a thin, nonfrequency-selective, absorbing element having a small heat capacity and intercepting a small portion of the radiation reaching the particular chamber in which it is contained.

4,373,138
HYBRID UNLATCHING FLIP-FLOP LOGIC ELEMENT
Theodore A. Fulton, Warren Township, Somerset County, and Arthur F. Hebard, Bernardsville, both of N.J., assignors to Bell Telephone Laboratories, Incorporated, Murray Hill, N.J.
Continuation of Ser. No. 974,376, Dec. 29, 1978, abandoned. This application Feb. 6, 1981, Ser. No. 232,011
Int. Cl.³ H03K *3/38*
U.S. Cl. 307—277 **17 Claims**

1. A superconductive circuit comprising

first and second Josephson junction latching gates (J_1, J_2) each having V=0 and V≠0 states, a critical current which when exceeded causes the gate to switch from its V=0 to its V≠0 state, and a drop-back level below which the gate switches from its V≠0 to its V=0 state,

electrode means (N_1, N_2) for applying DC bias current (I_b) to said gates,

control means (I_{c1}, I_{c2}) for selectively switching said gates from their V=0 to their V≠0 states,

one of said gates being initially set to its V=0 state and the other to its V≠0 state, CHARACTERIZED IN THAT said circuit is rendered unlatching by

a passive network (1, 3, 4, 5) coupling said gates to one

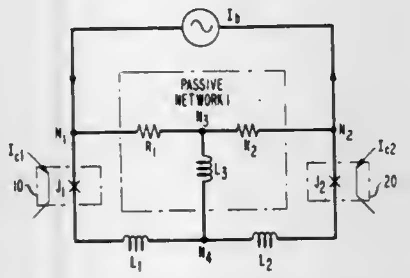

another and responsive to the switching of states of said one gate from its V=0 to its V≠0 state for applying a transient current to said other gate in a direction opposite to the direction said bias current flows therein and effective to reduce current in said other gate below the drop-back level thereof, thereby automatically resetting said other gate from its V≠0 to its V=0 state.

4,373,139
DETECTORS
Graham E. Beesley, Basingstoke, England, assignor to Motorola, Inc., Schaumburg, Ill.
Filed Mar. 17, 1980, Ser. No. 130,931
Claims priority, application United Kingdom, Apr. 30, 1979, 7914883
Int. Cl.³ G01R *19/02, 19/22, 23/09*
U.S. Cl. 307—350 **2 Claims**

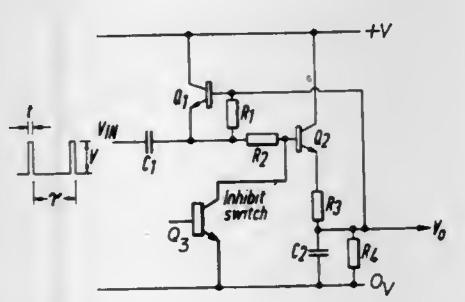

1. An averaging detector for detecting RF signals with noise pulses comprising:

input means;

output means;

a first transistor;

a first resistor coupled between the emitter and base of the first transistor;

a second transistor;

a first capacitor for applying the RF signals with noise to the emitter of said first transistor and the base of said second transistor;

a first reference potential line coupled to the collector of said first and said second transistors;

the output means being coupled to the base of said first transistor;

a second resistor coupled between the emitter of said second transistor and said output means;

a second reference potential line;

a second capacitor and a third resistor connected in parallel and interposed between said second reference potential line and said output means, wherein all of the aforementioned resistors, capacitors and transistors are so chosen that, upon application of a voltage greater than the threshold of said first transistor, successive positive and negative-going cycles in the RF signal alternately reverse bias and forward bias said first and second transistors to

achieve a balance between the half cycle charging of the second capacitor through said second resistor and the continuous discharge of the second capacitor through said third resistor to provide a DC output voltage proportional to the average level of the waveform envelope of the RF signals at said input means.

4,373,140
PEAK DETECTOR
Sze L. Chin, Lake Ronkonkoma, N.Y., assignor to Grumman Aerospace Corporation, Bethpage, N.Y.
Continuation-in-part of Ser. No. 2,086, Jan. 9, 1979, abandoned. This application Nov. 12, 1980, Ser. No. 205,907
Int. Cl.³ G01R *19/04*
U.S. Cl. 307—351 **34 Claims**

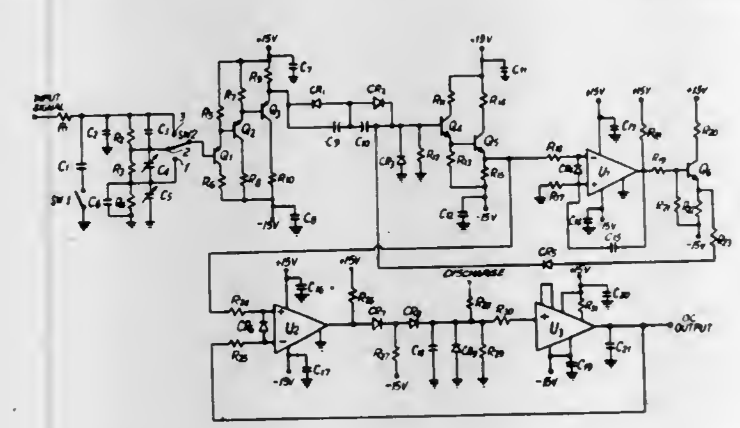

1. Apparatus for providing a direct current output voltage proportional to the peak to peak amplitude of an input signal comprising:

(a) signal processing means adapted to receive said input signal;

(b) direct current restoring means operatively connected to said signal processing means;

(c) peak detecting means responsive to said direct current restoring means; and

(d) first feedback means connected between the output of said direct current restoring means and the input to said direct current restoring means.

4,373,141
FAST UPDATING PEAK DETECTOR CIRCUIT
David E. Sanders, St. Petersburg, Fla., assignor to E-Systems, Inc., Dallas, Tex.
Filed Jan. 22, 1981, Ser. No. 227,254
Int. Cl.³ H03K *5/153;* **G11C** *27/02;* **G01R** *19/04*
U.S. Cl. 307—351 **13 Claims**

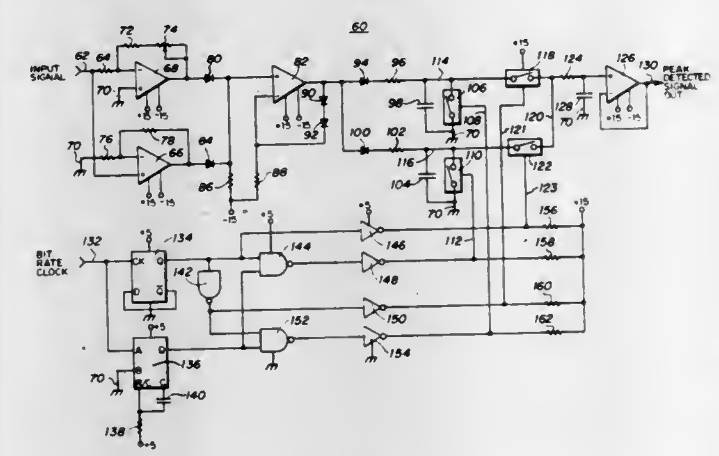

1. A peak detector circuit, comprising:

means for rectifying an input signal to produce a rectified signal;

first means connected to receive said rectified signal for detecting and holding the peak amplitude of said rectified signal to produce a first peak signal;

second means connected to receive said rectified signal concurrently with said first means for detecting and holding the peak amplitude of said rectified signal to produce a second peak signal;

means for alternately connecting said first and second peak signals to an output terminal; and

means for alternately resetting said first and second peak signals to a preset level wherein each of said peak signals is reset when the other of said peak signals is connected to said output terminal.

4,373,142
THERMIONIC ENERGY CONVERTERS
James F. Morris, Fairview Park, Ohio, assignor to The United States of America as represented by the Administrator of the National Aeronautics and Space Administration, Washington, D.C.
Filed Feb. 19, 1981, Ser. No. 235,797
Int. Cl.³ H01J *45/00*
U.S. Cl. 310—306 **10 Claims**

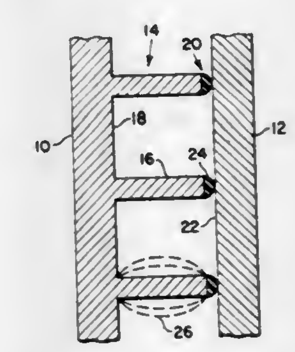

1. In a cesium thermionic energy converter of the type comprising a diode having a pair of spaced electrodes with an interelectrode gap therebetween containing cesium wherein one of said electrodes is an emitter having a first elevated temperature and the other is a collector having a second elevated temperature lower than said first temperature, the improvement comprising

a plurality of minidiodes comprising protrusions of electrode material extending from the surface of one of said electrodes, said minidiodes being distributed in the interelectrode gap with the outermost ends thereof being adjacent to the other of said electrodes so that said minidiodes are in thermal communication with both said electrodes whereby the end of each minidiode adjacent to said collector is raised to said second temperature thereby readily adsorbing cesium and developing a low work function and the end of each minidiode adjacent to said emitter is raised to said first temperature thereby adsorbing less cesium and developing a high work function, and

means for electrically insulating said minidiodes from one of said electrodes whereby shorted-diode discharges are generated along said minidiodes to effectively ionize the cesium without electrically shorting said emitter to said collector.

4,373,143
PARAMETRIC DUAL MODE TRANSDUCER
Jan F. Lindberg, Norwich, Conn., assignor to The United States of America as represented by the Secretary of the Navy, Washington, D.C.
Filed Oct. 3, 1980, Ser. No. 193,684
Int. Cl.³ H04B *13/00*
U.S. Cl. 310—334 **8 Claims**

1. A parametric dual mode transducer comprising:

first transducer means for converting an applied signal of a predetermined frequency; and

second transducer means for converting two applied signals having a difference frequency substantially the same as

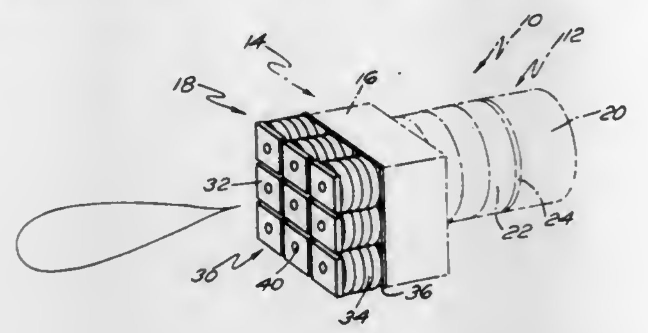

said predetermined frequency, said second transducer means being nodally mounted to said first transducer means.

4,373,144

CATHODE ARRANGEMENT FOR AN X-RAY TUBE

Kurt Franke, Erlangen, Fed. Rep. of Germany, assignor to Siemens Aktiengesellschaft, Berlin & Munich, Fed. Rep. of Germany

Filed Dec. 17, 1980, Ser. No. 217,216

Claims priority, application Fed. Rep. of Germany, Jan. 14, 1980, 3001141

Int. Cl.³ H01J *1/20, 35/00*

U.S. Cl. 313—338 **2 Claims**

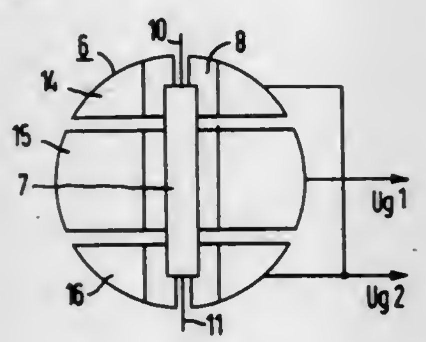

1. A cathode arrangement for an x-ray tube comprising a cathode cup for electron focusing having a groove-like cavity and having a heater coil extending in a longitudinal direction in said cavity, said cathode cup (6) being subdivided approximately perpendicularly to the longitudinal direction of the heater coil (7) to define several parts (**14**, **15**, **16**) which are insulated from one another, and means for applying separate control potentials (Ug1, Ug2) to said parts (**15**; **14**, **16**).

4,373,145

THIN FILM ELECTROLUMINESCENT DEVICE

Shaun L. McCarthy, Ann Arbor, and John J. Lambe, Birmingham, both of Mich., assignors to Ford Motor Company, Dearborn, Mich.

Division of Ser. No. 49,855, Jun. 18, 1979, abandoned. This application Mar. 12, 1981, Ser. No. 242,966

Int. Cl.³ H01J *1/63, 1/70*

U.S. Cl. 313—503 **3 Claims**

1. An electroluminescent device which emits visible radiation in response to an applied voltage comprising:
a support substrate having a first surface;
a base conductor film of doped aluminum overlaying said substrate surface;
an electroluminescent barrier layer of impurity doped aluminum oxide overlaying said base conductor film;
a semi-transparent electrically resistive layer overlaying said barrier layer;
a relatively transparent counterelectrode overlaying said resistive layer, wherein said device emits visible radiation when said voltage is applied between said base conductor and said counterelectrode, and further wherein said barrier layer of aluminum oxide contains ions of said impurity;
said device being formed by a method including the following steps:
depositing aluminum alloyed, to a minor extent, with an impurity selected from the group consisting of manganese, praseodymium, neodymium, europium, terbium, dysprosium, holmium and erbium to form said base conductor film;

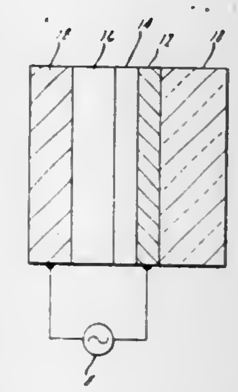

oxidizing said conductor film to form a nonporous layer doped with said impurity and defining said barrier layer;
depositing a layer of electrically resistive material selected from the group consisting of manganese oxide, molybdenum oxide, cerium fluoride, tungsten oxide, and magnesium fluoride on said nonporous barrier layer;
and depositing a semi-transparent metal film on said resistive layer to define said counterelectrode.

4,373,146

METHOD AND CIRCUIT FOR OPERATING DISCHARGE LAMP

Robert P. Bonazoli, Hamilton, and Fredrick W. Paget, Rockport, both of Mass., assignors to GTE Products Corporation, Stamford, Conn.

Filed Oct. 20, 1980, Ser. No. 198,321

Int. Cl.³ H05B *41/24*

U.S. Cl. 315—209 R **15 Claims**

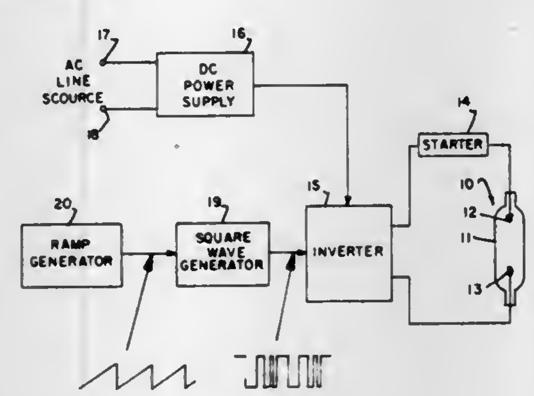

1. A method of operating a high intensity discharge lamp having a pair of electrodes hermetically sealed within an arc tube, the method comprises frequency modulating a carrier waveform in the Kilohertz range to provide an AC output having a continuously varying frequency, and applying said AC output across the electrodes of said lamp to thereby operate said lamp in a manner which minimizes or avoids acoustic resonance effects within said arc tube.

4,373,147

TORQUE COMPENSATED ELECTRIC MOTOR

William L. Carlson, Jr., St. Cloud, Minn., assignor to General Signal Corporation, Stamford, Conn.

Filed Jul. 23, 1981, Ser. No. 286,297

Int. Cl.³ H02P *5/52*

U.S. Cl. 318—48 **14 Claims**

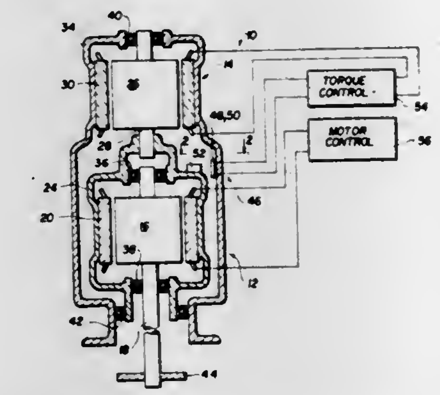

1. A torque compensated electric motor comprising:
a housing;
an output shaft extending from said housing;
a first rotor mounted to said output shaft in said housing;
a first stator rotatably mounted in said housing concentric to said first rotor;
a second rotor mounted in said housing to said first stator for rotation therewith;
a second stator mounted in said housing concentric to said second rotor;
means for measuring the reaction torque experienced by said first stator; and
control means for providing a control signal to said second stator as a function of said measured torque to produce a counter-torque in said second rotor to balance the reaction torque experienced by said first stator.

4,373,148

ROTATING ELECTRIC MACHINE HAVING A TOROIDAL WOUND MOTOR WINDING

Kenneth H. Gutz, Clearwater, Fla., assignor to The United States of America as represented by the Secretary of the Navy, Washington, D.C.

Filed Feb. 17, 1981, Ser. No. 235,287

Int. Cl.³ H02P *7/06*

U.S. Cl. 318—254 **10 Claims**

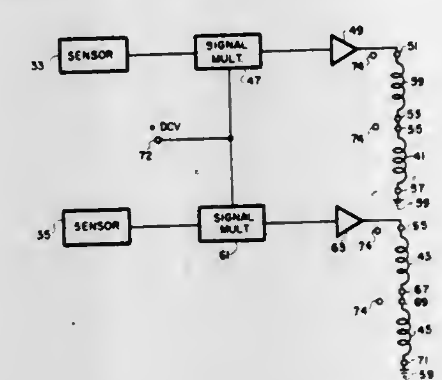

1. A rotating electric machine comprising, in combination:
a metallic housing having a pair of apertures;
a toroidal winding assembly coaxially mounted within said housing, said toroidal winding assembly having a cylindrical shaped ring, and first, second, third, and fourth coils, each coil of which is wound in a toroidal helix configuration around said cylindrical shaped ring, and each coil of which has first and second terminals with the second terminal of said first coil connected to the first terminal of said third coil, and the second terminal of said second coil connected to the first terminal of said fourth coil;
a rotor coaxially rotatable within said toroidal winding assembly and having on the periphery thereof a magnetic assembly, said magnetic assembly having alternately a plurality of north pole magnets and a plurality of south pole magnets generating a magnetic field having a predetermined magnetic flux density, said rotor having a nonmagnetized gap between each alternate north pole and south pole magnet and defining a gap between said rotor and said toroidal winding assembly;
first detecting means, mounted upon said housing and having an output, for sensing the flux density of the magnetic field generated by said magnetic assembly and for providing a first analog signal proportional to the flux density of the magnetic field sensed thereby;
second detecting means having an output, mounted upon said housing, and positioned upon said housing such that when said first detecting means is positioned adjacent one of said nonmagnetic gaps, said second detecting means will be positioned at the center of the adjacent north or south pole of said magnetic assembly, said second detecting means for sensing the flux density of the magnetic field generated by said magnetic assembly, and for providing a second analog signal proportional to the flux density of the magnetic field sensed thereby; and
circuit means having a first terminal connected to the output of said first detecting means, a second terminal connected to the output of said second detecting means, a third terminal connected to the first terminal of said first coil, a fourth terminal connected to the first terminal of said second coil, and a ground terminal connected to the second terminal of said third coil and the second terminal of said fourth coil providing a first winding excitation signal in response to said first analog signal, and a second winding excitation signal in response to said second analog signal, said first winding excitation signal to effect the excitation of the first and third coils of said toroidal winding assembly, and said second winding excitation signal to effect the excitation of the second and fourth coils of said toroidal winding assembly so as to cause the rotation of said rotor in a predetermined direction at a constant speed.

4,373,149

PULSE-CONTROLLED ELECTRIC WINDOW RAISER

Jean-Claude Coste, Marly-le-Roi, France, assignor to Regie National des Usines Renault, Boulogne-Billancourt, France

Filed Sep. 9, 1980, Ser. No. 185,555

Claims priority, application France, Sep. 13, 1979, 79 22863

Int. Cl.³ H02P *1/18, 3/08*

U.S. Cl. 318—281 **5 Claims**

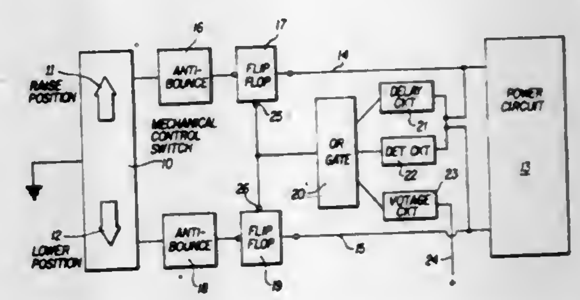

1. An electric pulse-controlled unit for controlling movement of an automotive window provided for use in a vehicle having at least one lockable door with at least one window, comprising:
a motor for raising and lowering said at least one window;
power circuit means for activating said motor; including
motor control means for providing one of a cut-off position and first and second active positions with said motor being activated for respectively raising and lowering said

window when one of said first and second active positions is provided;

a mechanical control switch enabling selection of one of the first and second active positions in order to operate the motor in a selected direction;

raising and lowering flip-flops having priority reset, preselection input and set-to-one inputs and being connected between the output of said mechanical control switch and the input of said power circuit means;

a control pulse resetting system coupled to the priority reset input of said flip-flops, comprising,

a first delay circuit controlled by the reverse outputs of said flip-flops;

a double control detection circuit controlled by the non-reverse outputs of said flip-flops;

a voltage loading detection circuit, and

an OR-gate having inputs coupled to outputs of said delay circuit, said double control detection circuit and said voltage loading detection circuit, as well as an output coupled to the priority reset inputs of said flip-flops;

wherein said mechanical control switch produces a pulse output upon a first selection of one of said first and second active positions to initiate respective raising or lowering of said window.

4,373,150

MOTOR CONTROL SYSTEM

Allen M. Ritter, Rocky Mount, Va., assignor to General Electric Company, Salem, Va.

Continuation of Ser. No. 104,018, Dec. 17, 1979, abandoned. This application Oct. 8, 1981, Ser. No. 309,731

Int. Cl.³ H02P *5/16*

U.S. Cl. 318—336 **14 Claims**

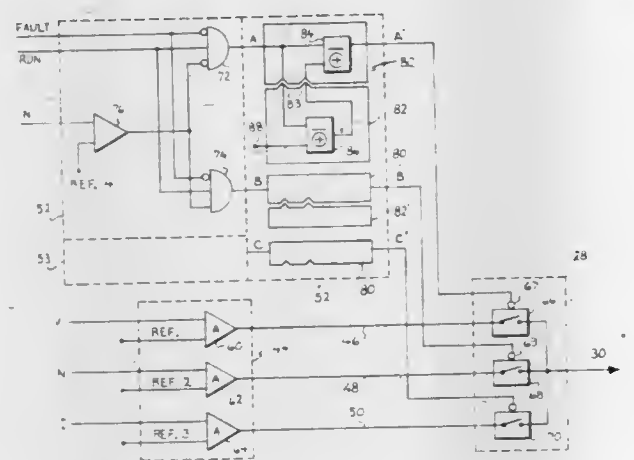

1. A motor control system of the type in which a plurality of feedback control loops, respectively representing different individual types of motor operating parameters, are sequentially utilized to control motor operation in accordance with desired types of motor operation comprising:

(a) sequencing means responsive to external inputs denoting the desired types of motor operation for sequentially selecting which of said plurality of said feedback control loops is operative in accordance with a predetermined logic sequence pattern; and,

(b) modifying means selectively connectable to said sequencing means for modifying said predetermined logic sequence pattern to a modified logic sequence pattern whereby in the effective absence of said modifying means said sequencing means operates in said predetermined logic sequence pattern and in the effective presence of said modifying means said sequencing means operates in said modified logic sequence pattern.

4,373,151

STOCHASTIC DEMODULATOR FOR PHASE JUMP-MODULATED SIGNALS, OPERATING IN TIME DIVIDED UP OVER SEVERAL CHANNELS

Jean-Pierre Houdard; Jean-Jacques Julie, and Bernard G. Leoni, all of Colombes, France, assignors to Le Materiel Telephonique Thomson-CSF, Colombes, France

Filed Apr. 8, 1980, Ser. No. 138,285

Claims priority, application France, Apr. 11, 1979, 79 09147

Int. Cl.³ H04L *27/22*

U.S. Cl. 329—104 **10 Claims**

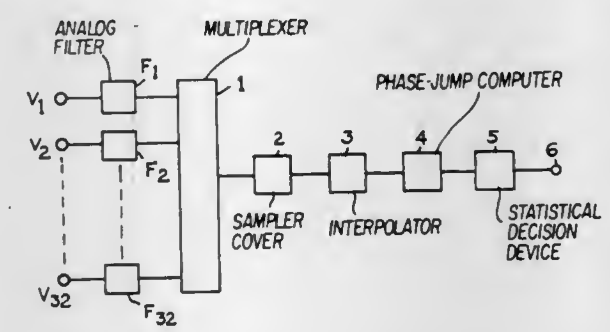

1. A demodulation process for phase jump-modulated signals, in particular for the processing in time divided up over a plurality of transmission channels, comprising the steps of:

sampling and coding said signals on reception;

interpolating said sampled and coded signals in such a way as to obtain a whole number n of samples for each information symbol;

comparing with a fixed reference signal the phase deviation of each sample obtained after interpolation is calculated, wherein the thus calculated phase deviation of each sample is compared with the phase deviation calculated in the same way for the sample preceding the sample under consideration by n units;

code converting the result of the said comparison by comparing with a phase jump value having different comparison results, but which are in a same range of values;

starting a counter when the results of said comparison cross a threshold with said threshold corresponding to a given number of samples taken from a series of successive samples and all belonging to the same range of values; and

validating the result of said comparison when said counter reaches a given state to thereby output a demodulated signal.

4,373,152

BINARY TO ONE OUT OF FOUR CONVERTER

Herbert K. Jacobsthal, Scottsdale, Ariz., assignor to Honeywell Information Systems Inc., Phoenix, Ariz.

Filed Dec. 22, 1980, Ser. No. 219,407

Int. Cl.³ H03K *13/24*

U.S. Cl. 340—347 DD **7 Claims**

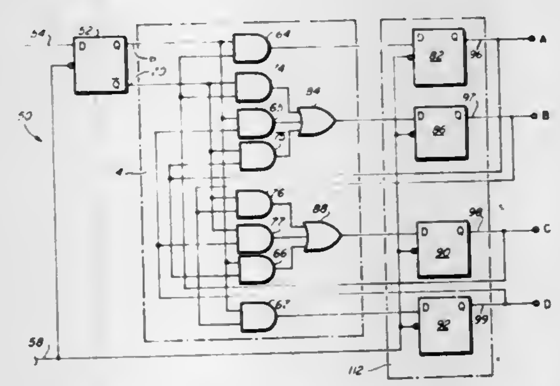

1. An apparatus for encoding a binary information stream having a first and second binary level arranged in a predetermined order, a first binary bit within said binary information stream having said first level and a second bit of information within said binary information stream having said second binary level, comprising:

a logic input network connected to receive said binary information stream and to identify a current binary bit level;

a logic output network coupled to said input network to actuate one of four output terminals in response thereto as determined by said predetermined level order, said four output terminals being arranged in a series as a first, second, third and fourth output terminals said output logic network actuating said first and fourth output terminals after said third and second output terminals respectively, are actuated if said first binary bit is received by said input logic network, said output logic network actuating said second and third output terminals after said fourth and first output terminals respectively, are actuated and if said first binary bit is received by said input logic network, said output logic network actuating said second output terminal after said first and third outputs are actuated if said second binary bit is received by said input logic network, and said output logic network actuating said third output terminal after said second and fourth output terminals are actuated if said second binary bit is received by said input logic network.

4,373,153

STOP INDICATOR ARRANGEMENT FOR AN AUTOMOTIVE VEHICLE

Isao Sano, Tokyo, and Hiroshi Kanamori, Yokohama, both of Japan, assignors to Nissan Motor Co., Ltd., Yokohama, Japan

Filed Jun. 22, 1981, Ser. No. 275,823

Claims priority, application Japan, Aug. 12, 1980, 55-111385

Int. Cl.³ B60Q *1/00;* **B62D** *25/00*

U.S. Cl. 340—87 **10 Claims**

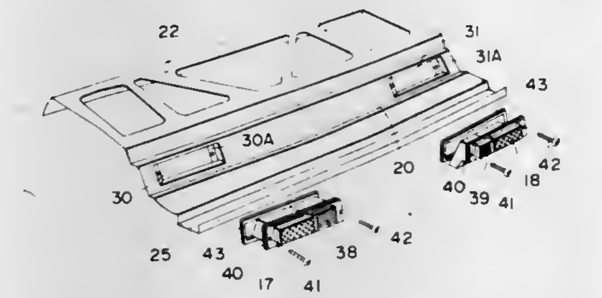

1. A stop indicator arrangement for an automotive vehicle having a rear window, a boot lid lower than the rear window in the closed position, and a brake system, the arrangement comprising:

(a) a laterally extending panel provided between the lower end of the rear window and the front end of the boot lid, the panel having an aperture therein and sloping downwardly in the direction from the front to the rear with respect to the vehicle;

(b) means for emitting light when energized;

(c) means for energizing the light-emitting means when the brake system is applied;

(d) a casing housing the light-emitting means and extending through said panel aperture;

(e) means for attaching the light-emitting means to the casing;

(f) a ventilating grille unit being contiguously combined with the casing and extending through the aperture of the panel;

(g) a flange formed around the combination of the casing and the grille unit; and

(h) means for attaching the flange to the panel to mount the combination of the casing and the grille unit.

4,373,154

DATA ENCODING AND/OR DECODING

Michael J. Balme, Southampton, and David T. Edwards, Lymington, both of England, assignors to Racal Recorders Ltd., Bracknell, England

Filed May 15, 1981, Ser. No. 263,904

Claims priority, application United Kingdom, May 16, 1980, 8016313; Dec. 4, 1980, 8038980

Int. Cl.³ H03K *13/24*

U.S. Cl. 340—347 DD **27 Claims**

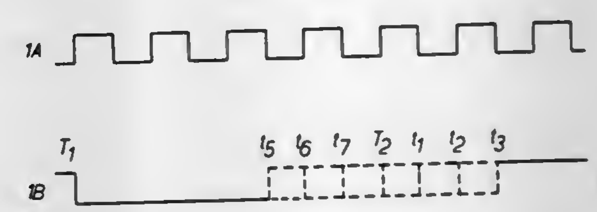

1. A system for encoding the value of units of data, comprising

means connected to receive each data unit and producing an electrical signal in response thereto, each electrical signal being of opposite polarity to the preceding one and being defined by oppositely directed signal transitions,

means connected to receive and sense the value of each data unit in turn and operative to control the time spacing between the transition to a respective electrical signal and the immediately preceding transition in dependence on the value of the data unit, one of the possible values of the data unit corresponding to a predetermined datum time spacing and the or each other possible value of the data unit having a respective pair of possible time spacings, one greater than, and one less than, the length of the datum time spacing, and

selecting means connected to receive and sense the values of the data units and operative in response to a data unit having the or each said other possible value to compare the two possible corresponding time spacings with signals representing the cumulative effect of the transitions on the mean long term time spacing and on the mean long term DC content of the output waveform produced by the electrical signals, so as to select that one of the two possible time spacings which constrains those mean values within predetermined limits.

4,373,155

BRAKE FLUID LEVEL INDICATOR

Frank P. Dola, Port Richey, Fla., assignor to AMP Incorporated, Harrisburg, Pa.

Filed Nov. 12, 1981, Ser. No. 320,646

Int. Cl.³ G08B *21/00;* **H01H** *3/16*

U.S. Cl. 340—623 **5 Claims**

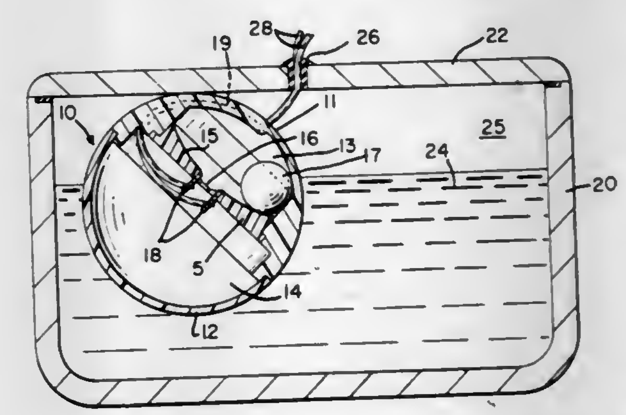

1. A fluid level indicator of the type comprising a fluid reservoir having a reservoir cover thereon and a float contained in said reservoir, said float being lighter than an equal

volume of the fluid whose level is to be indicated, said indicator being characterized in that

said indicator further has means for suspending said float from the reservoir cover, said suspending means limiting the downward travel of said float when the fluid level drops, said suspending means defining the apex of the float at the point of attachment thereto, said float being top-heavy toward said apex whereby said apex tends to submerge when the float is floating,

said float has an upper chamber and a lower chamber therein, said chambers being separated by an intermediate piece having a concave surface facing said upper chamber, said concave surface having a pair of metal contacts embedded in the center thereof flushly with said surface, said surface having a depression therein between said contacts, said contacts communicating with said lower chamber and having wires attached thereat, said wires being connected to warning means remote from said reservoir,

said upper chamber having a metal ball therein, whereby,

said float hangs upright on said suspending means and said metal ball rests in said depression and bridges said contacts when said fluid level is low, thereby activating said remote warning means, and said float tends to roll over so that said ball rolls out of said depression when said fluid level is high.

4,373,156

APPARATUS AND METHOD FOR PRODUCING RAPID, HIGH RESOLUTION HARD COLOR COPIES FROM COMPUTER-BASED GRAPHICS AND DIGITAL IMAGE PROCESSING SYSTEMS

Robert B. Pfannkuch, Northfield, Ill., and Fred W. Grab, Mission Viejo, Calif., assignors to Bell & Howell Company, Chicago, Ill.

Filed Apr. 11, 1980, Ser. No. 139,941

Int. Cl.³ G09G *1/28*

U.S. Cl. 340—703 **16 Claims**

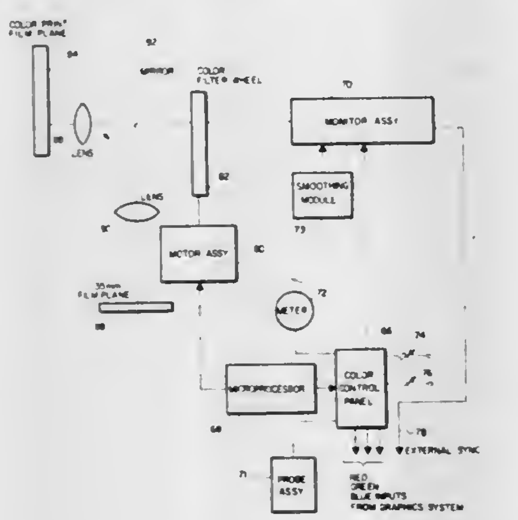

1. A versatile, rapid and high resolution hard copy system for producing color copies from computer-based graphics and image processing, said system comprising:

(1) a computer-controlled color video signal graphics system comprising

(a) a CPU and a program memory electronically coupled to said CPU;

(b) a character generator means for producing electronically generated digital character and/or graphics data in response to commands from said CPU;

(c) input/output means for entering program and control data to said CPU; and

(d) a color video signal generating means for transforming said digital data from said character generator means into a plurality of separate color video signals; and

(2) a color camera system comprising

(a) a video imaging device for transforming said separate color video signals into video images;

(b) a system controller;

(c) a color control means electronically interconnected between said video imaging device and said system controller, said color control means being coupled to said separate color video signals output from said color video signal generating means, and said color control means being controlled by the system controller such that said plurality of separate color video signals are sequentially switched through to said video imaging device;

(d) a color film medium optically exposed in a synchronous manner to the sequence of video images being generated on said video imaging device; and

(e) color separation means placed in the optical path between said color film medium and said video imaging device, said color separation means being electronically connected to said system controller and controlled thereby so as to permit separate synchronous exposure of said color film medium to each video image corresponding to a separate color signal switched through to said video imaging device.

4,373,157

SYSTEM FOR OPERATING A DISPLAY PANEL

George E. Holz, North Plainfield, and Okan K. Tezucar, Scotch Plains, both of N.J., assignors to Burroughs Corporation, Detroit, Mich.

Filed Apr. 29, 1981, Ser. No. 258,875

Int. Cl.³ H01J *17/48;* **G02F** *1/01*

U.S. Cl. 340—805 **8 Claims**

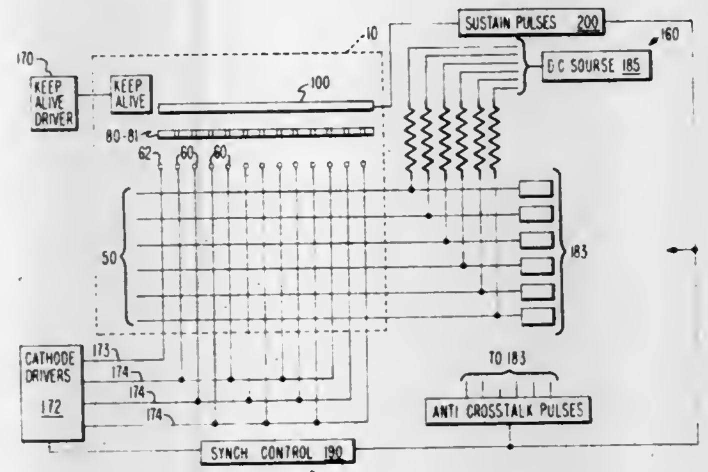

1. A display panel and operating system therefor comprising

a gas-filled display panel including a matrix of D.C. scanning cells arrayed in columns and having scan electrode means for turning on all of the cells of each column sequentially and for selectively turning off one or more scan cells in each column as the column is turned on; and a matrix of display cells adjacent to said matrix of scanning cells, with each scanning cell communicating with a display cell through a small aperture in an electrode plate, and having display electrode means for operation to sustain display glow after glow has been transferred thereto from a scanning cell,

a source of sustaining signals coupled to said display electrode means,

a source of display signals coupled to said scanning electrode means and operable to turn off selected scanning cells in each column of scanning cells as each such column is energized whereby glow is transferred from said selected scanning cells to the associated display cells, and

a source of anti-crosstalk pulses coupled to said scan electrode means for application thereto at the same time that display signals are coupled thereto.

4,373,158

DEVICE FOR ALTERING ENCODED DATA

Leslie M. Orloff, 6 Roughriders Ct., Huntington, N.Y. 11743

Filed Jul. 30, 1980, Ser. No. 173,821

Int. Cl.³ H04Q *9/00;* **G06K** *7/06, 19/06*

U.S. Cl. 340—825.3 **4 Claims**

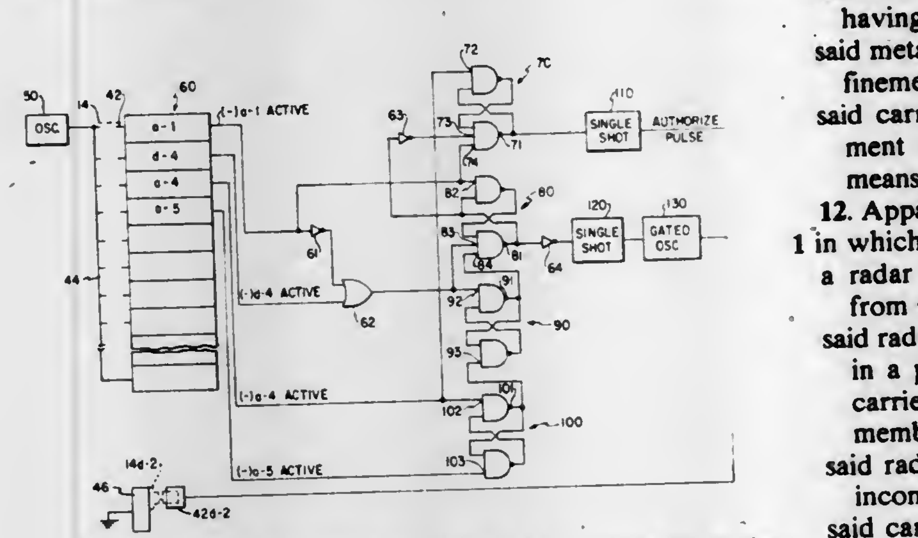

1. Apparatus for altering and reading a record card of the type having a surface containing a plurality of electrically conductive bits arranged thereon in a predetermined pattern, at least one of said bits, at a predetermined location, being a debit bit adapted to be melted or burned away, said apparatus comprising:

a housing having a compartment adapted to accept the record card;

a source of an electrical debiting signal of predetermined power and duration;

means for detecting the insertion of said card into a predetermined position in said compartment;

means responsive to said detecting means for activating said debit signal source;

means for coupling said signal to at least one of said debit bits;

means for detecting whether the electrical continuity of said debit bit has been broken;

means responsive to said continuity detecting means for disabling said activating means;

means responsive to said activating means and to said continuity detecting means for generating an authorize pulse; and

means independent of said activating means for reading said electrically conductive bits.

4,373,159

HEAT AND DETECTION RESISTANT IDENTIFICATION APPARATUS

Alvan W. Leavitt, West Mifflin, and Alice E. Primm, Pleasant Hills, both of Pa., assignors to Claim Guard Associates, Pittsburgh, Pa.

Filed Jun. 30, 1980, Ser. No. 164,360

Int. Cl.³ G01S *13/78;* **B65D** *85/00*

U.S. Cl. 343—6.5 R **39 Claims**

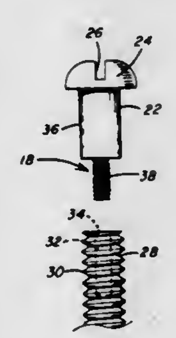

1. Apparatus for identifying a structure comprising, identification means containing preselected information associated with a structure for selectively identifying the structure,

a carrier member,

means associated with said carrier member for removably supporting said identification means on said carrier member,

said identification means includes an elongated metal strip having a preselected length and thickness,

said metal strip being flexible to facilitate insertion and confinement thereof within said carrier, and

said carrier member being adapted for releasable engagement with said structure to conceal said identification means from visual detection on the structure.

12. Apparatus for identifying a structure as set forth in claim 1 in which said identification means includes,

a radar transponder for transmitting a preselected signal from said carrier member,

said radar transponder being secured to said carrier member in a position to transmit a preselected signal from said carrier member for identifying the location of said carrier member,

said radar transponder having an antenna for receiving an incoming signal,

said carrier having an opening therein forming an internal recess for receiving said radar transponder,

said antenna projecting out of said recess to receive an incoming signal,

transmitter means associated with said radar transponder for generating a coded incoming signal to actuate said radar transponder, and

said radar transponder being operable upon actuation to transmit a preselected coded signal from said carrier back to said transmitter means to indicate the location of said carrier.

4,373,160

ANTENNA ARRANGEMENTS

David Cooper, Chelmsford, England, assignor to Marconi Company Limited, Chelmsford, England

Filed Aug. 8, 1980, Ser. No. 178,542

Claims priority, application United Kingdom, Aug. 10, 1979, 7928011

Int. Cl.³ H04B *7/00*

U.S. Cl. 343—100 SA **8 Claims**

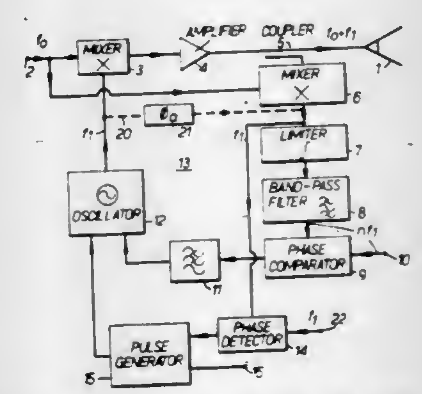

1. An antenna arrangement having at least one antenna channel which comprises means for feeding a carrier signal via an amplifier to an antenna element, and a phase-locked loop which, in addition to said amplifier, includes: a controllable oscillator for generating an output signal having a predetermined intermediate frequency and a phase which is adjustable in dependence on a control signal; a mixer for mixing said output signal of said oscillator with a high frequency signal to form said carrier signal which is fed to said amplifier; a further mixer for mixing the output signal of said amplifier with said high frequency signal to reproduce said intermediate frequency; and phase comparison means for comparing the phase of the signal produced by said further mixer with a signal having a reference phase, with the result of said comparison being supplied to said oscillator as said control signal to control

the phase of said intermediate frequency signal so that the phase of the carrier signal at the antenna bears a required relationship with said reference phase and is adjustable independently of variations in the frequency of said carrier signal.

4,373,161
DOPPLER RADAR MOUNTING STRUCTURE FOR MOTOR VEHICLES
Akira Matsumura, Yokosuka, Japan, assignor to Hitachi, Ltd. and Nissan Motor Co., Ltd., both of Tokyo, Japan
Filed Aug. 21, 1980, Ser. No. 179,982
Claims priority, application Japan, Aug. 25, 1979, 54-107695
Int. Cl.³ H01Q *1/32*
U.S. Cl. 343—717 **8 Claims**

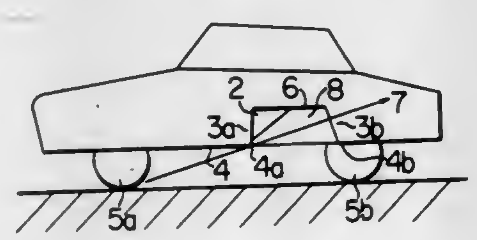

1. A mounting structure of a Doppler radar speed sensor for an automobile, said Doppler radar speed sensor having an antenna section having an antenna mouth and a sensor section, being housed in a casing and attached to a bottom surface of a floor of said automobile for detecting the speed of said automobile, said mounting structure comprising:
a chamber formed in said floor forward of rear wheels of the automobile and rearward of front wheels of the automobile, which is recessed upward from the floor and open downward relative to a road surface for accommodating said casing of said sensor, and having a front side wall substantially perpendicular to a longitudinal axis of said automobile, a front edge defined as a line of intersection between a plane parallel to said floor and the lowermost end of said front side wall, and a top wall; and
means for mounting said casing of said Doppler radar speed sensor completely within a forward upper corner of said chamber defined by said top wall, said front side wall and a plane containing said front edge and a tangential line drawn from said front edge to an outer diameter of a wheel located ahead of said chamber, the mouth of said antenna being directed toward the road surface and the rear end of said automobile, and wherein said radar casing is in the form of a triangular prism,
whereby said Doppler radar speed sensor is protected from attacks by pebbles and splashes produced by said front wheels.

4,373,162
LOW FREQUENCY ELECTRONICALLY STEERABLE CYLINDRICAL SLOT ARRAY RADAR ANTENNA
Ralph W. Peterson, Minneapolis, Minn., assignor to Control Data Corporation, Minneapolis, Minn.
Continuation of Ser. No. 129,146, Mar. 10, 1980, abandoned. This application Oct. 28, 1981, Ser. No. 315,837
Int. Cl.³ H01Q *13/10*
U.S. Cl. 343—771 **2 Claims**

1. A radar antenna for frequencies in the 30 to 60 MHz range consisting of an array of "O" slot radar antennas wherein at least two "O" slot radar antennas, each antenna having a pair of parallel longitudinal portions and a pair of parallel transverse portions connected in the shape of a rectangle, are positioned on a conductive cylinder having a circumference not greater than 100 inches and each "O" slot antenna occupies less than one-third of the circumference of the cylinder and each of said antennas has a pair of connection points to a transmission line on one of said portions of said slot antenna transverse to the axis of the cylinder and wherein said connection point pairs for said slot antenna are in transverse portions approximately one-quarter wave length apart from one another and wherein each of said slot antennas has a total antenna length of approximately one wave length and wherein said slot antennas have the centers thereof approximately one-half wave length apart for the frequency of design and in which the continuous slot

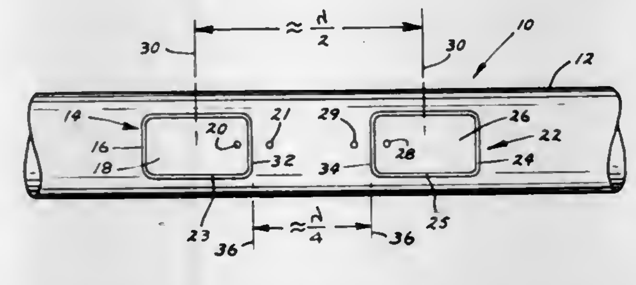

element defining the "O" shape of each antenna is a continuous physical and electrical interruption on the order of a very small fraction of a wave length in width and which forms a center conductive element which is the center of the "O" shape electrically isolated from said cylinder and to which one of said pair of connection points to a transmission line is fixed.

4,373,163
LOOP ANTENNA FOR SECURITY SYSTEMS
Jan Vandebult, Topsfield, Mass., assignor to I.D. Engineering, Inc., Ipswich, Mass.
Filed Jul. 14, 1980, Ser. No. 168,484
Int. Cl.³ H01Q *7/04;* G08B *13/24*
U.S. Cl. 343—842 **4 Claims**

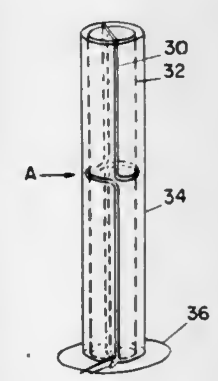

1. A loop antenna for propogating or receiving electromagnetic radiation but not electrostatic radiation in conjunction with a security system for identifying the presence or absence of at least one resonant tag circuit in the presence of said antenna, said security system including at least one transmitter and at least one receiver, said antenna defined as a twisted loop antenna comprising:
a conductor formed in at least one twisted loop wherein a portion of a single loop is twisted at least 180° to form at least two adjacent, separate lobes of the same loop such that with a given current flow in said loop, said current circles in opposite directions in said adjacent lobes, said twisted loop having a perimeter and a common side between adjacent lobes;
electrostatic shielding surrounding said perimeter of said twisted loop and surrounding said common side, a first insulative gap formed in said shielding surrounding said perimeter, and a second insulative gap formed in said shielding surrounding said common side, wherein said conductor and said shielding comprise a coaxial cable; and
further comprising a cylindrical form around which said coaxial cable is wrapped to form said twisted loop in the form of a figure "8" with a cross-over between adjacent loops traveling circumferentially around said cylindrical form to produce said common side, and said shielding of said cable at said cross-over being isolated against electrical contact to form said second gap.

4,373,164
DROPLET CHARGE CONDITION DETECTION IN AN INK JET SYSTEM PRINTER OF THE CHARGE AMPLITUDE CONTROLLING TYPE
Mikio Osaki, Kashihara, and Sumio Kita, Nara, both of Japan, assignors to Sharp Kabushiki Kaisha, Osaka, Japan
Filed Apr. 29, 1981, Ser. No. 258,636
Claims priority, application Japan, Apr. 30, 1980, 55-59153
Int. Cl.³ G01D *18/00*
U.S. Cl. 346—75 **9 Claims**

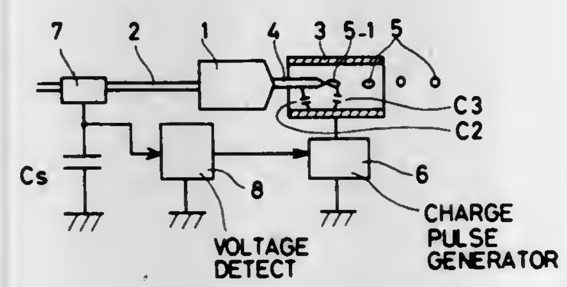

1. A charge condition detection system in an ink jet system printer of the charge amplitude controlling type which comprises an ink droplet issuance means for emitting ink droplets at a given frequency and charging tunnel means for charging said ink droplets in accordance with print information or by a phase detection search pulse, said charge condition detection system comprising:
detection electrode means disposed in an ink liquid supply system near said ink droplet issuance means and contacting an ink liquid to be supplied to said ink droplet issuance means;
capacitor means connected to said detection electrode means for accumulating charges corresponding to charges carried by said ink droplets charged by said charging tunnel means; and
voltage detection means for detecting a voltage appearing across said capacitor means as a function of charges accumulated thereby.

4,373,165
VERY HIGH DENSITY PUNCH-THROUGH READ-ONLY-MEMORY
Al F. Tasch, Jr., Richardson, Tex., assignor to Texas Instruments Incorporated, Dallas, Tex.
Continuation of Ser. No. 92,241, Nov. 7, 1979, abandoned. This application Sep. 14, 1981, Ser. No. 301,504
Int. Cl.³ H01L *29/90, 27/10;* G11C *17/06, 11/36*
U.S. Cl. 357—13 **7 Claims**

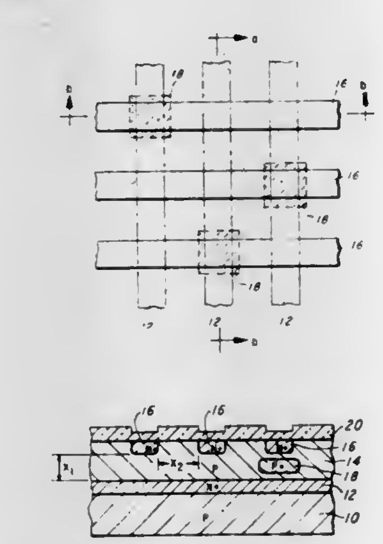

1. A semiconductor device comprising:
a body of monocrystalline semiconductor of one conductivity type having a plurality of parallel, elongated, surface regions of opposite conductivity type;
a plurality of elongated, subsurface parallel regions of opposite conductivity type, perpendicular to said surface plurality and spaced therefrom to form a criss-cross pattern; and
a subsurface plurality of regions of said one conductivity type located between selected crossing points of said pattern, said respective subsurface regions each being more heavily doped than said body of monocrystalline semiconductor.

4,373,166
SCHOTTKY BARRIER DIODE WITH CONTROLLED CHARACTERISTICS
D. L. Bergeron, Winooski; Daniel J. Fleming, South Burlington, both of Vt., and Geoffrey B. Stephens, Cary, N.C., assignors to IBM Corporation, Armonk, N.Y.
Continuation of Ser. No. 971,166, Dec. 20, 1978, abandoned. This application Dec. 19, 1980, Ser. No. 218,156
Int. Cl.³ H01L *29/48, 29/64, 29/56*
U.S. Cl. 357—15 **7 Claims**

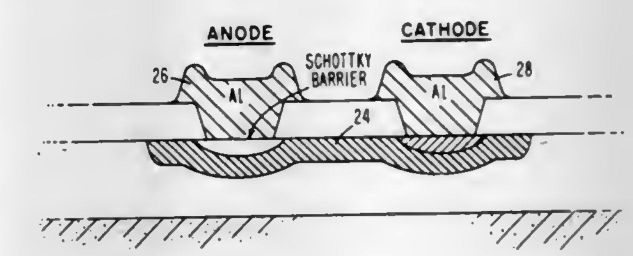

7. A self-isolated Schottky Barrier Zener diode with controlled characteristics, comprising:
a semiconductor substrate of a first conductivity type and first concentration;
a Schottky Barrier contact formed in said first opening forming a rectifying junction with said semiconductor substrate in said central region;
a second opening through said insulating layer over said outside region of said substrate;
an ohmic contact formed in said second opening, making electrical contact with said ion-implanted layer in said outside region;
whereby a self-isolated Schottky Barrier Zener diode is formed with controlled characteristics and a lower series resistance connection is made to said Schottky Barrier Zener diode.

4,373,167
SOLID STATE IMAGE SENSOR WITH OVERFLOW PROTECTION AND HIGH RESOLUTION
Tetsuo Yamada, Yokohama, Japan, assignor to Tokyo Shibaura Denki Kabushiki Kaisha, Kawasaki, Japan
Continuation of Ser. No. 2,001, Jan. 9, 1979, abandoned. This application Oct. 9, 1980, Ser. No. 195,614
Claims priority, application Japan, Jan. 13, 1978, 53-1971
Int. Cl.³ H01L *29/78, 27/14, 31/00*
U.S. Cl. 357—24 **3 Claims**

1. A solid state image sensor comprising:
(a) a first conductivity type semiconductor substrate having first and second main surfaces;
(b) a second conductivity type semiconductor layer on the first main surface of the semiconductor substrate, which forms a first P-N junction therebetween wherein the first conductivity type semiconductor substrate and the second conductivity type semiconductor layer each extend over an area including at least the entire area of said image sensor;
(c) a first conductivity type region within the second con-

ductivity type semiconductor layer, which forms a second P-N junction therebetween and serves as a photoelectric conversion element formed of a photodiode in conjunction with the second conductivity type semiconductor layer;

(d) means for reading out signal carriers generated in the photoelectric conversion element including a gate electrode, a transfer electrode and a channel region, said channel region being formed within the second conductivity type semiconductor layer and beneath the gate electrode, wherein signal carriers are transferred from said photoelectric conversion element of the first conductivity region into the channel region under control of said gate electrode and said transfer electrode;

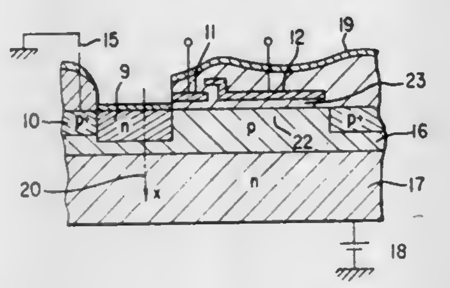

(e) biasing means for supplying a reverse bias voltage to the first P-N junction, which causes the second conductivity type semiconductor layer to be kept in the punch-through condition, said biasing means being connected to the second main surface of the semiconductor substrate;

(f) wherein the first conductivity type region is surrounded by a channel stop region;

said substrate having a first drain region beneath the photoelectric conversion element for preventing a blooming phenomenon and the excess signal carriers generated at the second P-N junction flowing into the substrate, and a second drain region beneath the means for reading out signal carriers for trapping unwanted carriers generated at the substrate due to long wave length light.

4,373,168

DIGITAL TIME-BASE CORRECTOR HAVING A WIDE CORRECTION RANGE

Mineo Mizukami, and Tatsuo Konishi, both of Tokyo, Japan, assignors to Nippon Electric Co., Ltd., Tokyo, Japan

Filed Mar. 28, 1980, Ser. No. 135,084

Claims priority, application Japan, Mar. 30, 1979, 54-39133; Mar. 30, 1979, 54-39135; Mar. 30, 1979, 54-39136

Int. Cl.³ H04N *9/46, 5/76*

U.S. Cl. 358—19 **9 Claims**

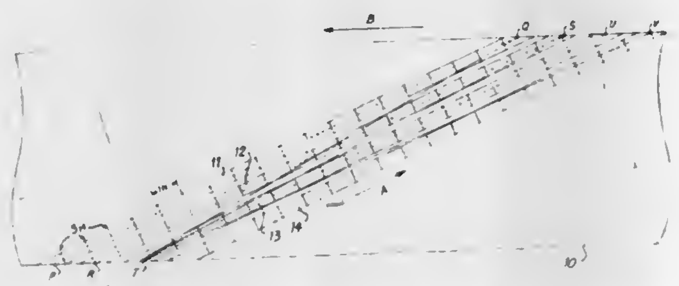

1. A time-base corrector for correcting the time-base error contained in a television video signal comprising:

(a) means for generating a first clock pulse in synchronism with said television video signal;

(b) means responsive to said first clock pulse for converting said television video signal to a digital video signal;

(c) digital memory means for storing said digital video signal;

(d) means responsive to said first clock pulse, a first horizontal sync signal and a first vertical sync signal contained in said television video signal for generating write-in address data designating an address at which said digital video signal is to be written into said digital memory;

(e) means for generating a second clock pulse in synchronism with a reference signal;

(f) means responsive to a second horizontal sync signal and a second vertical sync signal contained in said reference signal and said second clock pulse for generating read-out address data designating an address at which the stored digital video signal is read out from said digital memory; and

(g) means responsive to said second clock pulse for converting the read-out digital video signal to an analog signal; wherein said first clock pulse generating means comprises:

(i) delay means for delaying the leading edge of said first horizontal sync signal to generate a delayed leading edge signal;

(ii) means for generating a first gate pulse of a predetermined pulse width in response to said delayed leading edge signal;

(iii) means for gating said first horizontal sync signal with said first gate pulse to extract a trailing edge signal from said first horizontal sync signal;

(iv) means for controlling the delay time of said delay means in response to the time interval between said delayed leading edge signal and said trailing edge signal;

(v) means for generating a second gate pulse in response to said trailing edge signal; and

(vi) means for gating said television video signal with said second gate pulse to extract a color burst signal; said first color pulse being produced from said color burst signal.

4,373,169

MULTI-WINDOW VISUAL DISPLAY SYSTEM FOR FLIGHT SIMULATORS

John E. Burkam, Media, Pa., assignor to The Boeing Company, Seattle, Wash.

Filed Oct. 30, 1979, Ser. No. 89,694

Int. Cl.³ H04N *7/18*

U.S. Cl. 358—104 **19 Claims**

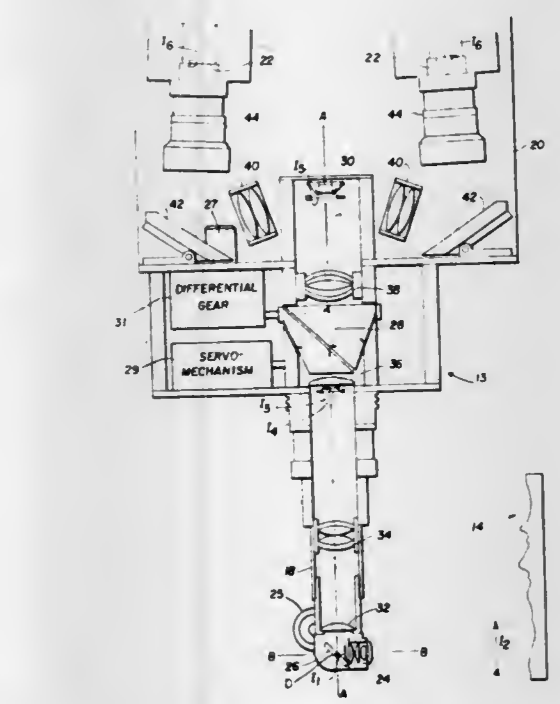

1. In a vehicle movement simulator which includes a vehicle operator station having vehicle controls, a visual display apparatus for generating a plurality of images to provide an operator with a view of an environment through which his simulated vehicle appears to be moving, said visual display apparatus comprising:

a plurality of television monitors at said station for presenting said plurality of images;

a terrain model;

a probe, carrying a like plurality of television cameras, connected respectively to said television monitors, said probe and said terrain model being movable in translation relative to one another, said probe also carrying optical means for viewing and supplying said images of said terrain model to said television cameras;

computer means, connected to said vehicle controls, for generating position signals proportional to the location of the simulated vehicle relative to the environment through which it appears to be moving, said computer means also generating pitch, roll, and yaw signals proportional to the rotation of the simulated vehicle about pitch, roll, and yaw axes of the vehicle, respectively; and

positioning means, connected to receive said position signals generated by said computer means, for moving said probe relative to said terrain model;

said optical means including

a tube, having a first end and a second end defining an axis of said tube;

a single wide-angle objective lens means, which is pivotally connected to the second end of said tube and which includes an optical axis intersecting said tube axis, for transmitting a wide-angle image of said terrain model toward said tube axis;

a mirror means pivotally connected to the second end of said tube, for reflecting said wide-angle image along said tube axis toward the first end of said tube;

reflecting means, arranged around said tube axis at the first end of said tube, for reflecting a different portion of said wide-angle image to each television camera;

mirror rotating means, actuated by said wide-angle objective lens means, for rotating said mirror means as said wide-angle objective lens means is rotated so as to reflect the center of the wide-angle image along said tube axis:

yaw means, connected to receive said yaw signal generated by said computer means, for rotating said images of said terrain model about said yaw axis;

roll means, connected to receive said roll signal generated by said computer means, for rotating said images of said terrain model about said roll axis; and

pitch means connected to receive said pitch signal generated by said computer means, for rotating said wide-angle objective lens means proportional to the pitch signal, to thus rotate the images of said terrain model about said pitch axis.

4,373,170

PLAYBACK MODE SWITCHING CIRCUIT FOR TAPE RECORDER

Yoshimitsu Sunaga, and Satoru Honda, both of Saitama, Japan, assignors to Pioneer Electronic Corporation, Tokyo, Japan

Filed Jul. 16, 1980, Ser. No. 169,254

Claims priority, application Japan, Jul. 16, 1979, 54-90047; Jul. 16, 1979, 54-90048

Int. Cl.³ G11B *17/00, 15/48, 15/18*

U.S. Cl. 360—71 **6 Claims**

1. A playback mode switching circuit for a tape recorder, comprising:

a first flip-flop circuit coupled to be set by operation of a forward switch and reset by operation of a reverse switch, to provide two outputs for selectively determining a direction of rotation of a capstan;

gate means receiving said two outputs to provide a forward operation signal and a reverse operation signal; and

a second flip-flop circuit coupled to be set by operation of either one of said forward switch and said reverse switch and coupled to be reset by a fast forward switch, a rewind switch or a stop switch,

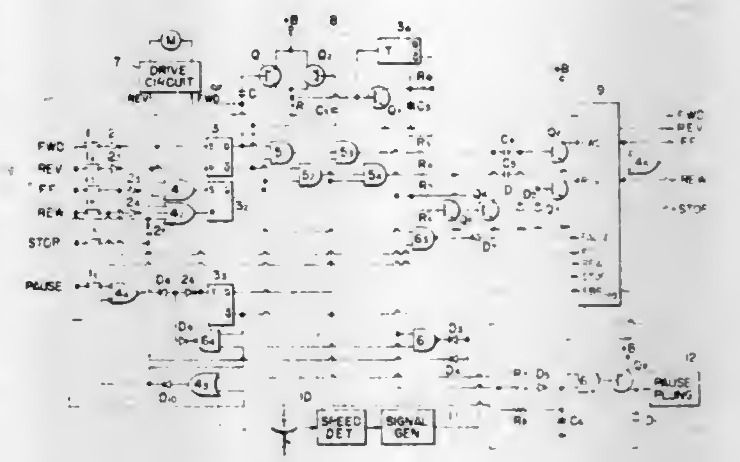

said gate means being opened when said second flip-flop circuit is set and closed when said fast-forward switch, said rewind switch or said stop switch is operated.

4,373,171

METHOD FOR DECREASING THE STOP DISTANCE IN MOVING TAPE DEVICES

Robert Dengler, Tuerkenfeld, and Franz J. Meyer, Emmering, both of Fed. Rep. of Germany, assignors to Siemens Aktiengesellschaft, Berlin & Munich, Fed. Rep. of Germany

Division of Ser. No. 72,979, Sep. 6, 1979. This application Aug. 14, 1980, Ser. No. 177,968

Claims priority, application Fed. Rep. of Germany, Sep. 21, 1978, 2841106

Int. Cl.³ G11B *15/18, 15/48*

U.S. Cl. 360—71 **6 Claims**

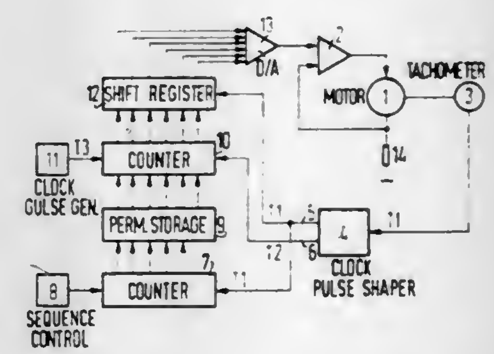

1. A method for shortening the stop distance of a magnetic recording tape normally moving at a nominal velocity in a tape recording and reading device in which an amplifier-controlled motor is drivingly connected to a capstan for moving said tape, and in which a tachometer is connected to said motor and provides a digital pulse sequence which is proportional to the velocity of said motor, and in which newly written information is subjected to a read-after-write check, said method comprising the steps of

weakly retarding movement of said tape by slowly decelerating said motor during the duration of said read-after-write check until the velocity of said tape is 0.7 times said nominal velocity;

rapidly retarding movement of said tape immediately after said read-after-write check by rapidly decelerating said motor; and

continuing said rapid deceleration until said tape is stopped.

4,373,172
TAPE RECORDER
Kazuyasu Motoyama, and Toshihiro Nakao, both of Hachioji, Japan, assignors to Olympus Optical Co., Ltd., Tokyo, Japan
Filed Jun. 5, 1980, Ser. No. 156,816
Claims priority, application Japan, Jun. 13, 1979, 54-74490
Int. Cl.^{3} G11B *21/12, 15/04, 5/54, 15/26*
U.S. Cl. 360—105 **12 Claims**

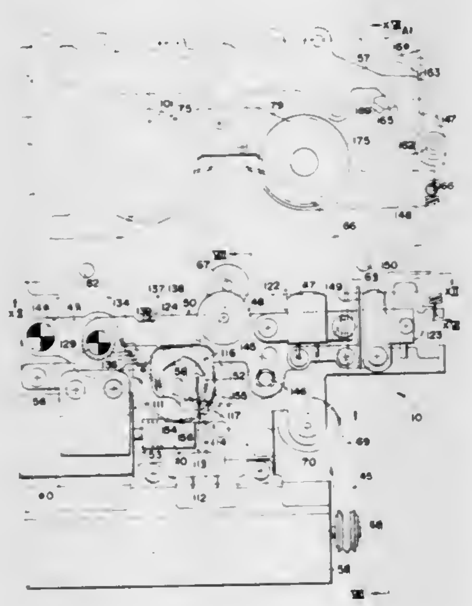

1. A tape recorder having a magnetic tape transport including a tape driving motor, the tape recorder further comprising:
a control motor disposed separately of the tape driving motor and controlled by the control switch;
a cam shaft to which the driving force of the control motor is transmitted;
a control switch having a movable element;
head support means for supporting a magnetic head and a pinch roller, said head support means being movable between a first position in which the magnetic head is in contact with a magnetic tape loaded in the tape recorder and the tape is clamped between the pinch roller and the capstan shaft and a second position in which the magnetic head is not in contact with the tape and the tape is not clamped between the pinch roller and the capstan shaft;
biasing means coupled to the head support means for biasing the head support means toward said first position thereof;
a press cam which is fixedly secured to the cam shaft and toward which the head support means is biased by the biasing force of the biasing means, the press cam being arranged to move the head support means against the force of said biasing means;
a control cam fixedly secured to the cam shaft and arranged to move the movable element of the control switch;
said movable element of the control switch being arranged to press against the control cam such that rotation of the cam shaft simultaneously rotates the press cam and control cam to thereby respectively move the movable element to change over the control switch and move the head support means against the biasing force of the biasing means by the unitary rotation of the control cam and press cam with the cam shaft.

4,373,173
MULTI-ELEMENT HEAD ASSEMBLY
Neil L. Robinson, and Ralph D. Silkensen, both of Tucson, Ariz., assignors to International Business Machines Corporation, Armonk, N.Y.
Filed Mar. 19, 1981, Ser. No. 245,562
Int. Cl.^{3} G11B *5/20, 5/22, 5/42*
U.S. Cl. 360—121 **6 Claims**

1. A multi-element magnetic head assembly comprising:
joined ferrite sandwich assemblies defining a multiplicity of separate transducing elements of uniform size and spacing, said sandwich assemblies comprising projections and cooperating slots for forming an interlocked head assembly;
thin film means forming multi-turn conductive coils for

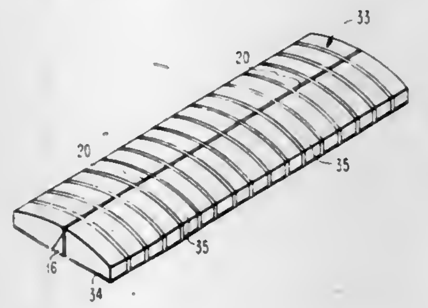

coupling respectively to said separate transducing elements, said thin film means being disposed on a bottom surface of said head assembly; and
an insulator material disposed over said conductive coils.

4,373,174
METHOD FOR PROTECTIVE MAGNETIZATION OF VESSELS
Nils B. Akesson, Nytorpsgatan 7, S-216 11 Malmö, Sweden
PCT No. PCT/SE79/00069, § 371 Date Nov. 25, 1980, § 102(e) Date Nov. 25, 1980, PCT Pub. No. WO80/02017, PCT Pub. Date Oct. 2, 1980
PCT Filed Mar. 28, 1979, Ser. No. 227,881
Int. Cl.^{3} B63G *9/06*
U.S. Cl. 361—149 **6 Claims**

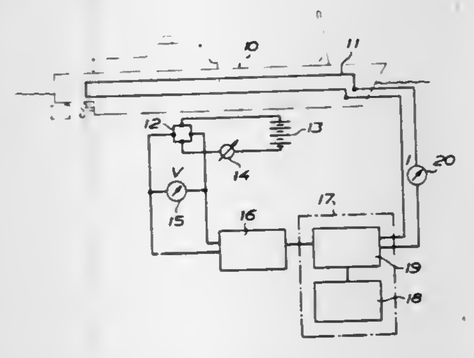

1. A method for the protective magnetization of a vessel having a magnetic loop comprising:
detecting the actual field strength of the magnetic field surrounding the vessel, as a function of the heading and longitudinal and transverse inclinations of the vessel, with a Hall generator, and
controlling the current through said magnetic loop so that the absolute value of the magnitude of the current increases faster than does the output of the Hall generator, to a maximum value.

4,373,175
APPARATUS TO DISSIPATE STATIC ELECTRICITY
C. Fred Mykkanen, Fridley, Minn., assignor to Honeywell Inc., Minneapolis, Minn.
Filed Mar. 17, 1981, Ser. No. 244,617
Int. Cl.^{3} H05F *3/02;* **A61N** *1/14*
U.S. Cl. 361—220 **18 Claims**

1. In safety apparatus connectible between a human and an electrically conductive terminal, the combination comprising
(a) an electrical part connectible to said terminal,
(b) a first electrical cable having one end adapted for electrical connection to said human,
(c) means interconnecting the opposite end of the cable and said part, said means including releasably interconnected plug and socket elements and an elongated flexible connection located between said elements and said part, said

elements being releasable in response to tension exertion transmitted between said cable and said flexible connection,

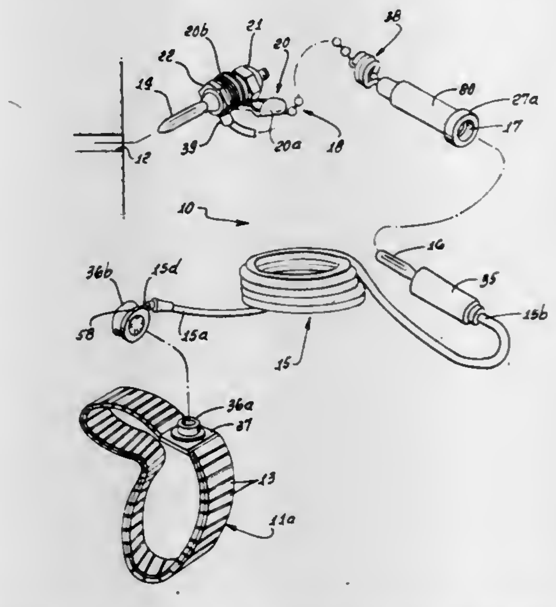

(d) and a second electrical cable coiled about said flexible connection and connected between one of said elements and said part to transmit electrical current therebetween, and to be free of tension when the flexible connection is tensioned.

4,373,176
ELECTROLYTIC CAPACITOR FOR AT LEAST 200 V SERVICE
Manuel Finkelstein, North Adams; Sidney D. Ross, and Franz S. Dunkl, both of Williamstown, all of Mass., assignors to Sprague Electric Company, North Adams, Mass.
Filed Sep. 30, 1981, Ser. No. 306,992
Int. Cl.^{3} H01G *9/02*
U.S. Cl. 361—433 **8 Claims**

1. An aluminum electrolytic capacitor comprising two contiguously wound aluminum foil electrodes with interleaved spacers, one of said foils bearing a barrier layer dielectric oxide on its surface, and an electrolyte in contact therewith, said electrolyte comprising as solute a tertiary amine or dipropylamine mono salt of dodecanedioic acid dissolved in a solvent mixture consisting of ethylene glycol, N-methyl-2-pyrrolidinone, and water and exhibiting a resistivity at 25° C. lower than said electrolyte absent either ethylene glycol or N-methyl-2-pyrolidinone and providing a capacitor that operates at 130° C. and at least 200 V.

4,373,177
HIGH TEMPERATURE ELECTROLYTIC CAPACITOR
Manuel Finkelstein, North Adams; Franz S. Dunkl, and Sidney D. Ross, both of Williamstown, all of Mass., assignors to Sprague Electric Company, North Adams, Mass.
Filed Sep. 30, 1981, Ser. No. 306,994
Int. Cl.^{3} H01G *9/02*
U.S. Cl. 361—433 A **4 Claims**

1. A high-temperature aluminum electrolytic capacitor comprising two aluminum electrode foils, with one of said foils bearing a barrier layer dielectric oxide, interleaved spacers wound throughout the length of said foils in contact with an electrolyte consisting essentially of ethylene glycol as solvent, water, a phosphate ion source, and as solute mono(di-n-propylammonium) adipate or mono(diisopropylammonium) adipate, thereby providing a capacitor capable of operating at 200 VDC or higher and at 130° C., said electrolyte having a room-temperature resistivity of at least 700 Ω-cm.

4,373,178
METHODS AND APPARATUS FOR CONTROLLING REFLECTED LIGHT
John E. Gulliksen, Shrewsbury, Mass., assignor to Koehler Manufacturing Company, Marlborough, Mass.
Filed Nov. 3, 1980, Ser. No. 203,273
Int. Cl.^{3} F21V *7/00*
U.S. Cl. 362—280 **19 Claims**

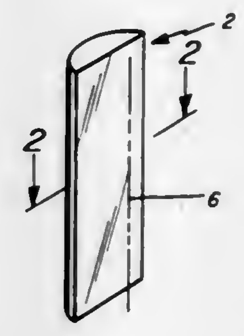

1. A method of producing a predetermined flood distribution of light from a luminaire body, said luminaire body including a paraboloidal reflecting surface and an actual light source located at the focal point of the reflecting surface, in which the actual light source is converted by clear refraction into a multiplicity of apparent light sources lying in a predetermined locus of such apparent light sources, the light radiating from the said apparent light sources impinging upon the reflecting surface at angles of incidence such that reflection from the reflecting surface provides a diverging light beam of predetermined character.

4,373,179
DYNAMIC ADDRESS TRANSLATION SYSTEM
Yutaka Katsumata, Inagi, Japan, assignor to Fujitsu Limited, Kawasaki, Japan
Filed Jun. 26, 1978, Ser. No. 919,173
Int. Cl.^{3} G06F *3/00*
U.S. Cl. 364—200 **4 Claims**

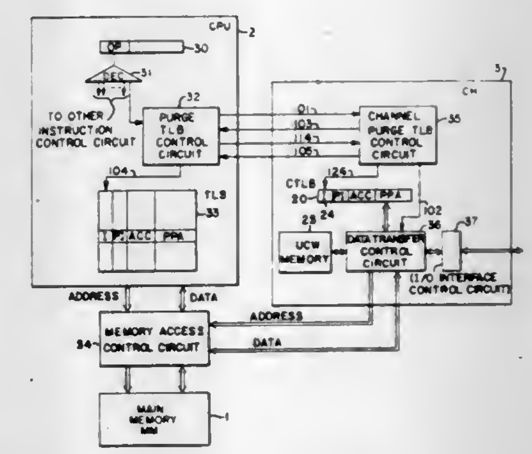

1. A data processing system comprising:
a main memory for storing an address translation table;
a central processing unit operatively connected to said main memory;
a plurality of channels or sub-system adapters operatively connected to said main memory and said central processing unit, each of said plurality of channels or sub-system adapters including main memory accessing means for accessing said main memory and for providing a physical page address to the respective channel or sub-system adapter by utilizing said main memory and said central processing unit to translate a logical page address to the physical page address, each said main memory accessing means comprising:
a register having areas for storing a copy of at least one entry

within said address translation table in said main memory and a validity bit indicative of the validity of said copy, said copy including the physical page address;

storage register means for storing the logical page address and an address in the page, said storage register means including a counter for indicating respective addresses in the page corresponding to said at least one entry within said address translation table by incrementing said address in the page;

first means, operatively connected to said register and said counter, for accessing said main memory in accordance with a physical address comprising said copy, including the physical page address, and one of said respective addresses in the page; and

second means, operatively connected to said central processing unit, for altering the state of said storage area containing said validity bit when said central processing unit has issued an instruction for updating said at least one entry within said address translation table or an instruction indicating alteration of said at least one entry, so that said validity bit is indicative of an invalid entry copy.

4,373,180

MICROPROGRAMMED CONTROL SYSTEM CAPABLE OF PIPELINING EVEN WHEN EXECUTING A CONDITIONAL BRANCH INSTRUCTION

James P. Linde, Lafayette Hill, Pa., assignor to Sperry Corporation, New York, N.Y.

Filed Jul. 9, 1980, Ser. No. 167,072

Int. Cl.³ G06F *9/28, 9/38*

U.S. Cl. 364—200 **2 Claims**

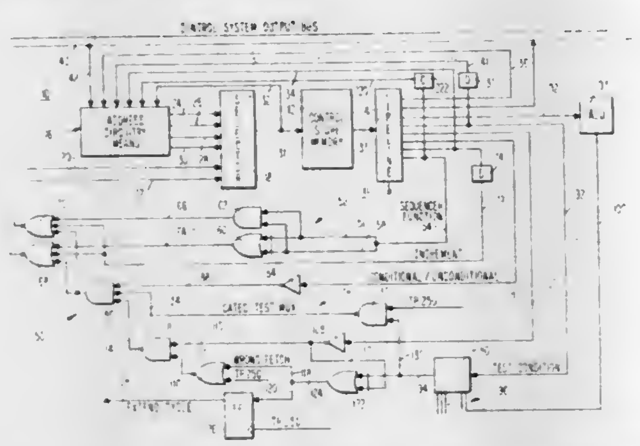

1. A microprogrammed control system which is capable of simultaneously fetching and executing microinstructions during a cycle time of the control system, comprising:

a control store memory (COS) which stores at least one microprogram having at least one conditional address microinstruction and at least second and third microinstructions, said at least one conditional address microinstruction having a programmable test condition field and a programmable anticipated condition field;

a pipeline register means connected to said control store memory for receiving a microinstruction therefrom and formed to store a microinstruction to be executed;

address circuitry means connected to said pipeline register and said COS for forming an ordinary address of a microinstruction in said microprogram which is one greater than the address of said microinstruction stored in said pipeline register means, and for forming at least one conditional address of a microinstruction in said microprogram which is different from said ordinary address;

test circuitry means connected to said pipeline register means for testing one of a plurality of conditions present in said microprogram control system when said at least one conditional address microinstruction is stored in said pipeline register means, said test circuitry means operating in response to bit signals transmitted from said programmable test condition field;

selection circuitry means connected to said pipeline register means, said address circuitry means and said control store memory for selecting one of said addresses from said address circuitry means and for transmitting said address to said control store memory before said test circuitry means has completed said testing, whereby the result of testing by said test circuitry means is anticipated, said selection circuitry means operating in response to at least one bit signal transmitted from said programmable anticipated condition field when said at least one conditional address microinstruction is present in said pipeline register means;

said selection circuitry means further comprises correction circuitry connected to said test circuitry means for changing said selection of said address when the actual result of said testing by said test circuitry means is different from said anticipated result;

said conditional address microinstruction comprises a sequencer function field wherein said address circuitry means forms a plurality of conditional addresses of a plurality of microinstructions stored in said microprogram;

a selector in said selection circuitry connected to said address circuitry means and said control store memory, said selector responsive to selector control signals to transmit said selected one of said addresses to said control store memory;

gating circuitry connected to said selector;

sequencer circuitry connected between said pipeline register means and said gating circuitry for generating selector control signals to select said conditional address from said address circuitry means in response to bit signals transmitted from said sequencer function field; and

anticipated condition circuitry connected between said pipeline register means and said gating circuitry for gating said selector control signals from said sequencer circuitry through said gating circuitry to said selector when said anticipated result calls for said conditional address, and for transmitting selector control signals to said selector to select and transmit said ordinary address in said address circuitry means to said control store memory when said anticipated result calls for an ordinary address.

4,373,181

DYNAMIC DEVICE ADDRESS ASSIGNMENT MECHANISM FOR A DATA PROCESSING SYSTEM

Douglas R. Chisholm, 1531 Ilene Ct., Delray Beach, Fla. 33444, and Hobart L. Kurtz, Jr., 425 N.W. 11th St., Boca Raton, Fla. 33432

Filed Jul. 30, 1980, Ser. No. 173,586

Int. Cl.³ G06F *9/30*

U.S. Cl. 364—200 **6 Claims**

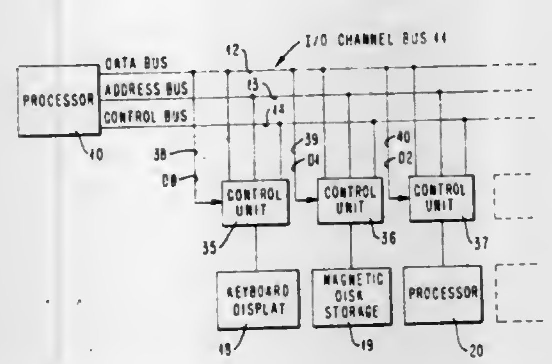

6. In a data processing system having a processor, a processor I/O bus, a plurality of peripheral devices and a plurality of control units for coupling the peripheral devices to the processor I/O bus, wherein each peripheral device is identified by means of a different device address assigned thereto, a dynamic device address assignment apparatus comprising:

a first device address register located in a first control unit for holding the device address assigned to its peripheral device;

a second device address register located in a second control unit for holding the device address assigned to its peripheral device;

circuitry responsive to the appearance of a unique I/O command on the I/O bus and to the activation of a first unique set of the data lines of the I/O bus by the processor for loading into the first device address register a first address supplied to the I/O bus by the processor for enabling such address to become the assigned device address;

and circuitry responsive to the appearance of the unique I/O command on the I/O bus and to the activation of a second and different unique set of the data lines of the I/O bus by the processor for loading into the second device address register a second address supplied to the I/O bus by the processor for enabling such address to become the assigned device address.

4,373,182

INDIRECT ADDRESS COMPUTATION CIRCUIT

Gary E. Schultz, San Juan Capistrano, Calif., and Albert J. Weldner, Tempe, Ariz., assignors to Sperry Corporation, New York, N.Y.

Filed Aug. 19, 1980, Ser. No. 179,514

Int. Cl.³ G06F *9/36*

U.S. Cl. 364—200 **15 Claims**

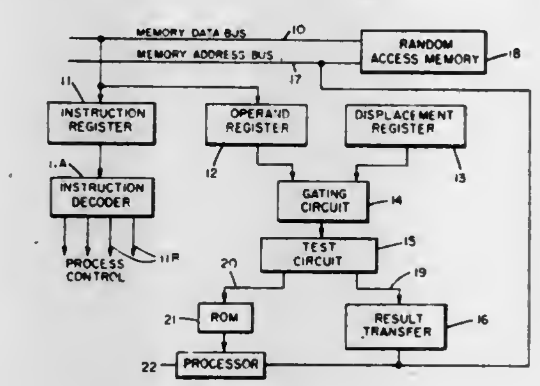

1. A data processing system comprising:

first address means for storing a first address signal component;

second address means for storing a second address signal component;

calculation means having a first input connected to said first address means and a second input connected to said second address means,

said calculation means operative to produce output signals based upon the value of the data supplied to said first and second inputs;

test means connected to receive said output signals from said calculation means, said test means operative to generate first and second enabling signals dependent upon the status of said output signals;

transfer means connected to receive a first output signal from said calculation means and responsive to said first enabling signal from said test means for transferring said first output signal through said transfer means directly; and

processing means connected to receive a second output signal from said calculation means and responsive to said second enabling signal for further processing the data on said first and said second inputs of said calculation means, and producing a further output signal as the result of the further processing.

4,373,183

BUS INTERFACE UNITS SHARING A COMMON BUS USING DISTRIBUTED CONTROL FOR ALLOCATION OF THE BUS

Rodney J. Means, Tucson, Ariz.; Galen P. Plunkett, Jr., Burke; Charles A. Dennis, Warrenton, both of Va., and John L. Moon, Washington, D.C., assignors to IBM Corporation, Armonk, N.Y.

Filed Aug. 20, 1980, Ser. No. 179,904

Int. Cl.³ G06F *3/04;* **H04Q** *9/00*

U.S. Cl. 364—200 **18 Claims**

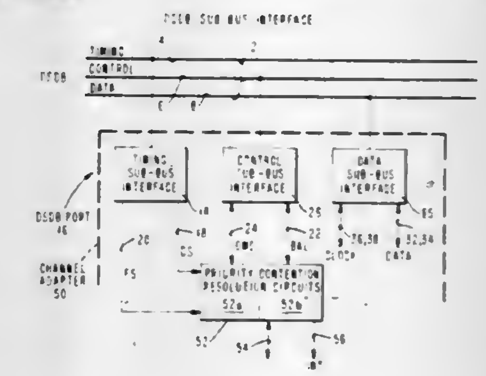

1. In a distributed data processing system including a plurality of bus interface units interconnected by a clock line which defines a periodic message frame, a serial bus allocation line and a data bus, an apparatus for the distributed allocation of the data bus to pending messages to be transmitted thereover in a time division multiple access mode, comprising:

a priority contention resolution circuit in a first bus interface unit having a talk address, including a transmission means having an output connected to said allocation line, said transmission means having an output for sequentially transmitting during a first message frame, a priority value and said talk address thereover in the form of a multibit binary number with the high order bit of said priority value first, in a synchronous manner with transmissions of respective priority values and talk addresses by other bus interface units contending for use of said data bus;

a monitoring means in said circuit having an input connected to said allocation line, for cyclically monitoring each sequential binary bit state of said allocation line and comparing it with a corresponding bit value of said priority value and talk address of said first bus interface unit;

an inhibiting means in said circuit having an input connected to said monitoring means and an output connected to said transmission means, for inhibiting the transmission of a corresponding bit of said priority value and talk address, if its value is less than the value of said binary bit state of said allocation line;

said circuit transmitting an allocation message including a listen address during said first message frame over said allocation line to a second bus interface unit connected thereto having said listen address when said priority value and talk address is greater than said respective priority values and talk addresses of said other interface bus units, said allocation message identifying a data message to be sent by said first bus interface unit over said data bus to said second bus interface unit in the next message frame.

4,373,184

VERTICAL FLIGHT PATH STEERING SYSTEM FOR AIRCRAFT

Antonius A. Lambregts, Renton, Wash., assignor to The Boeing Company, Seattle, Wash.

Filed Dec. 26, 1979, Ser. No. 107,464

Int. Cl.³ G06F *15/50;* **G06G** *7/78;* **G05D** *1/08*

U.S. Cl. 364—434 **10 Claims**

1. An aircraft control and display system providing computer augmented manual steering capability comprising:

control reference means for receiving and processing a

signal representative of the pilot's steering input to develop a control reference signal which is proportional to the time integral of said pilot's steering input;

aircraft sensing means for sensing and supplying a signal representative of the controlled state of the aircraft;

control command means for processing said control refer-

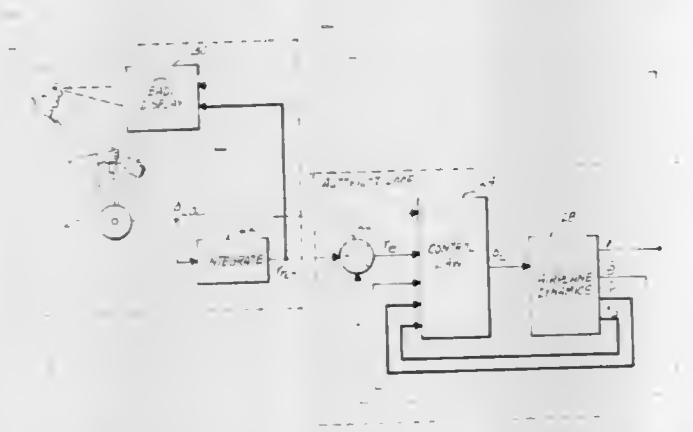

ence signal and said signal representative of the controlled state of the aircraft to produce a control surface command that automatically controls the craft's dynamics to smoothly bring the controlled state to track the control reference value; and

display means for displaying said control reference value and said controlled state of said craft to the pilot.

4,373,185

TRACKING IN A DISTRIBUTION SYSTEM

David A. Mills, Plano, and Norris G. Turner, Dallas, both of Tex., assignors to E-Systems, Inc., Dallas, Tex.

Filed Nov. 13, 1980, Ser. No. 206,670

Int. Cl.³ B65H *43/00*

U.S. Cl. 364—478 **17 Claims**

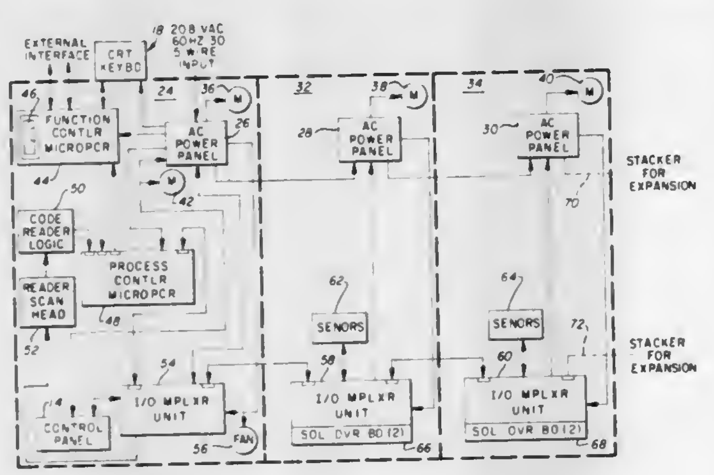

1. A method of tracking an item identified by a location code to one of a plurality of diverter stations in a distribution system, comprising the steps of:

injecting items in sequence into the distribution system, each item identified by a location code,

generating an injection signal in response to each item injected into the distribution system indicating that a location code is to be tracked,

advancing the location code for each item through a series of storage locations representing an image of the distribution system to track the movement of each item, each storage location representing an increment of distance in the distribution system, one or more of the storage locations having an identifying code identifying one of the plurality of diverter stations, and

generating a tracking signal to a diverter station associated with a location code.

4,373,186

MATRIX METHOD AND APPARATUS FOR ENGINE ANALYSIS

John P. Marshall, Plainwell, and Dennis A. Ruffer, Kalamazoo, both of Mich., assignors to Allen Group Inc., Kalamazoo, Mich.

Filed Aug. 14, 1980, Ser. No. 177,846

Int. Cl.³ G06F *15/50;* G01M *15/00*

U.S. Cl. 364—551 **8 Claims**

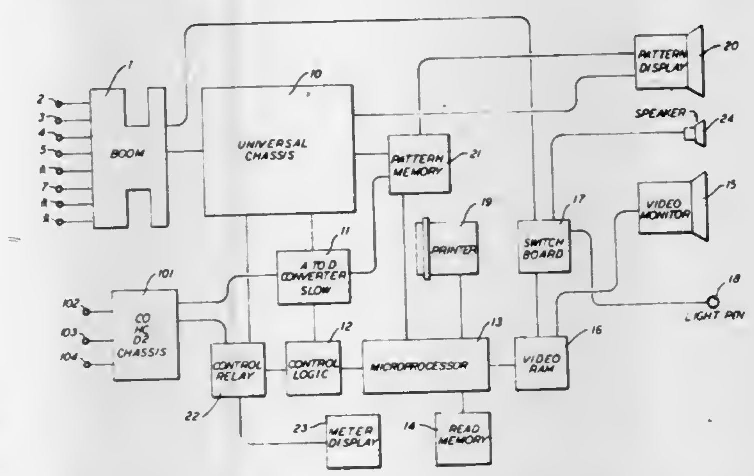

1. In an apparatus for diagnosing at least one selected system of an internal combustion engine which includes means for receiving digital electrical measurement signals corresponding to measured values of a plurality of engine operating parameters associated with the engine system, means for storing digital electrical signals for the programmed diagnosis of the at least one selected system of the internal combustion engine and means for processing the digital electrical measurement signals in accordance with the programmed diagnosis, the improvement comprising;

the means for processing in cooperation with said means for storing making at least one yes/no comparison of a plurality of selected digital electrical measurement signals with respective predetermined values stored in the means for storing and providing the result of each such comparison as a digital result signal, selecting and evaluating digital result signals indicative of the yes/no comparison results in accordance with a predetermined AND diagnostic equation stored in the means for storing, and generating a signal related to the state of the at least one engine system being diagnosed based upon one or more AND correspondences only, of the digital result signals selected according to the predetermined diagnostic equation.

4,373,187

CORRECTIVE FEEDBACK TECHNIQUE FOR CONTROLLING AIR-FUEL RATIO FOR AN INTERNAL COMBUSTION ENGINE

Toshio Ishii; Yasunori Mouri; Osamu Abe, all of Katsuta, and Taiji Hasegawa, Nakaminato, all of Japan, assignors to Hitachi, Ltd., Tokyo, Japan

Filed Jul. 17, 1980, Ser. No. 169,753

Claims priority, application Japan, Jul. 20, 1979, 54-91536

Int. Cl.³ F02B *1/06;* F02M *7/16*

U.S. Cl. 364—431.06 **26 Claims**

1. In an engine fuel control method for an engine having a combustion chamber for the combustion of fuel supplied thereto; an output shaft rotated by mechanical energy converted from thermal energy generated in said combustion chamber; a first sensor for sensing an operating condition of the engine; a second sensor for sensing a condition of exhaust gas produced by the combustion of the fuel in said combustion chamber; arithmetic means for determining a control amount of fuel based on the outputs of said first and said sensors; a drive circuit for producing a control signal in response to the output of said arithmetic means; and fuel supply means for

supplying fuel in accordance with the output of said drive circuit;

said method comprising:

a first step for detecting the outputs of said first and second sensors;

a second step for determining a first value indicative of such amount of fuel supplied that assures a predetermined air to fuel ratio in said combustion chamber, based on the output of said first sensor;

a third step for correcting the amount of fuel supplied such that an air to fuel ratio close to said predetermined air to fuel ratio is established in said combustion chamber, based on the output of said second sensor; and

a fourth step for applying data representing the corrected amount of fuel from said arithmetic means to said drive circuit;

an improvement wherein said third step includes:

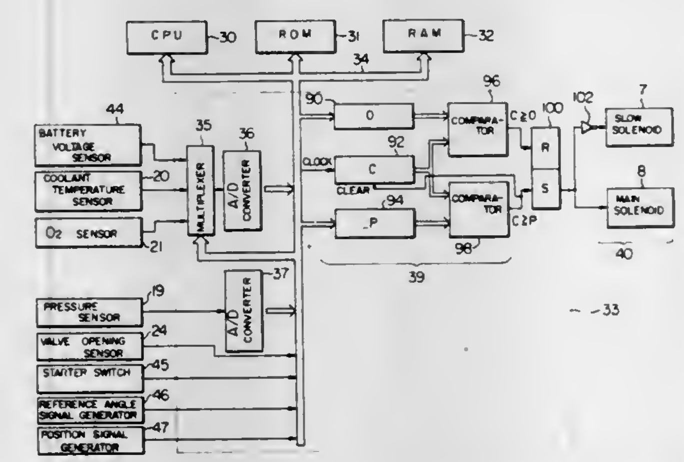

a fifth step for increasing or decreasing the data value indicative of the amount of fuel supplied before a change of the operation condition of the engine, based on the output of said second sensor;

a sixth step for determining the difference between the second value determined in said second step based on the output of said first sensor before said change of the operation condition of the engine and the first value determined in said second step based on the output of said first sensor after said change of the operating condition of the engine; and

a seventh step for increasing and decreasing the data value determined in said fifth step by the value determined in said sixth step;

the data value determined in said seventh step being applied to said drive circuit in said fourth step as a data value after said change of the operation condition of the engine.

4,373,188

CIGARETTE WEIGHT MONITORING SYSTEM

John G. Dowding; Peter R. Turner, both of London, and Robert J. Hudson, Pootings, Nr. Edenbridge, all of England, assignors to Molins Limited, London, England

Filed Oct. 9, 1979, Ser. No. 82,902

Claims priority, application United Kingdom, Oct. 7, 1978, 39720/78

Int. Cl.³ G06G *7/48;* G01B *13/02*

U.S. Cl. 364—552 **8 Claims**

1. Apparatus for providing a graphic display of the distribution of weights of cigarettes produced by a continuous rod cigarette making machine, about a desired mean valve, comprising analog-to-digital converter means for converting a series of analog weight signals for successive cigarettes or cigarette lengths to digital signals; a memory including a plurality of storage locations; means for allocating a binary bit corresponding to each weight signal, to a memory location in accordance with the digitized value of said signal; means for periodically scanning the memory to determine the number of bits assigned to each location; and means for successively

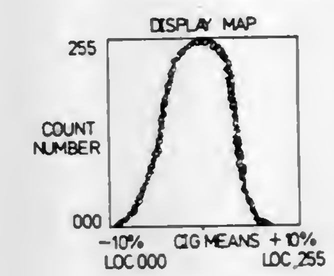

supplying signals representing each location and the number of bits assigned to it, to a graphic display device.

4,373,189

SIGNAL CONVERSION DEVICE

Charles M. Weant, 1806 Old Annapolis Blvd., Annapolis, Md. 21401

Filed Aug. 28, 1980, Ser. No. 182,290

Int. Cl.³ G06J *1/00*

U.S. Cl. 364—602 **4 Claims**

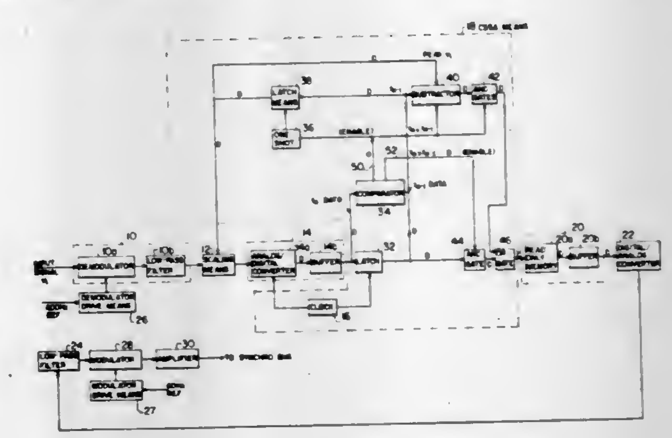

1. A signal conversion circuit for converting a periodic, analog, electrical input signal into an output signal differing from the input signal in amplitude and/or frequency and/or phase comprising:

scaling means for changing the amplitude of the input signal so that the peak thereof equals a preselected value;

A/D converter means operatively connected to said scaling means for sampling the amplitude of the input signal and changing the sampled values to an equivalent set of digital words, each digital word corresponding to the value of its associated sample;

a comparison, subtraction and scale adjustment (CSSA) means operatively connected to said A/D converter means and to said scaling means for receiving the output of said A/D converter means and storing it until the next output thereof is received, and for comparing each present output sample (t_n) of said A/D converter means with its prior output sample (t_{n-1}) once each cycle of the input signal V_i of said signal conversion circuit, the present and prior output samples being used to correct the scaling of said scaling means;

ROM means operatively connected to said CSSA means so as to receive the output of said A/D converter means, in the form of output digital words, for storing at each digital word address thereof another digital word in accordance with pre-programmed values corresponding to the values of a desired output signal; and

D/A converter means operatively connected to said ROM means for converting the output digital words thereof into corresponding analog values.

4,373,190
EFFICIENT, PRECOMPRESSION, BANDWIDTH-TOLERANT, DIGITAL PULSE EXPANDER-COMPRESSOR
Bernard L. Lewis, Oxon Hill, and Frank F. Kretschmer, Laurel, both of Md., assignors to The United States of America as represented by the Secretary of the Navy, Washington, D.C.
Filed Jan. 22, 1981, Ser. No. 227,323
Int. Cl.[3] G01S *13/28*
U.S. Cl. 364—715 **8 Claims**

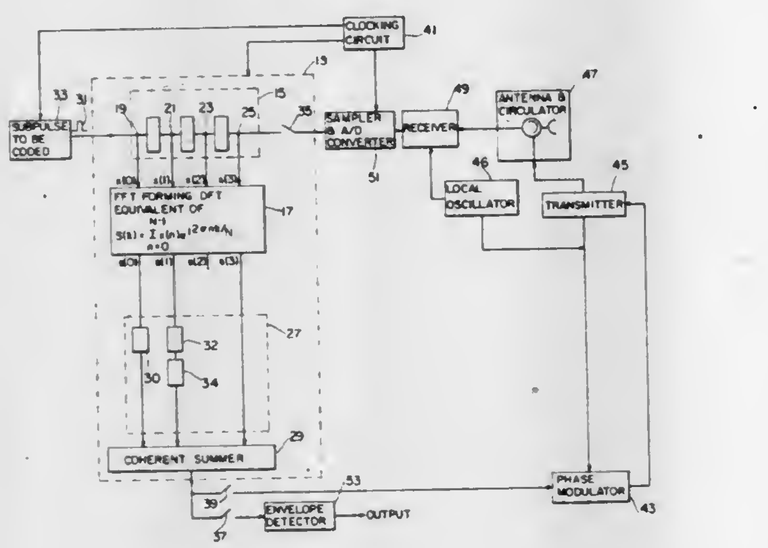

1. An efficient, pre-compression, bandwidth-tolerant, digital pulse expander-compressor comprising:
transform means having N output terminals and responsive to an applied subpulse for successively generating N replicas x(n) of the subpulse, where n=0, 1, 2,–, N−1 and N is an integer, in a time which is N times the length of the subpulse, and for weighting the replicas x(n) in accordance with the formula

$$s(k) = \sum_{n=0}^{N-1} x(n)e^{-j2\pi nk/N}$$

where k=0, 1, 2,–, N−1, to provide N weighted subpulses s(k), each at a respective one of the N output terminals, whenever one of the N replicas x(n) is generated; and
delay-summation means connected to the transform means for delaying each of the N weighted supulses s(k) corresponding to any replica of the applied subpulse by a time which is

$$N\left(k + \frac{N}{2} - 1\right)$$

the length of the applied subpulse for 0≦k≦N/2−1, and by a time which is

$$N\left(k - \frac{N}{2} - 1\right)$$

the length of the applied subpulse for N/2+1≦k≦N−1, and for separately summing the real and imaginary parts of the delayed subpulses.

4,373,191
ABSOLUTE MAGNITUDE DIFFERENCE FUNCTION GENERATOR FOR AN LPC SYSTEM
Bruce A. Fette, Mesa; Bruce D. Harte, Scottsdale, and Bill E. Tennyson, Paradise Valley, all of Ariz., assignors to Motorola Inc., Schaumburg, Ill.
Filed Nov. 10, 1980, Ser. No. 205,537
Int. Cl.[3] G06F *15/31;* G10L *1/00*
U.S. Cl. 364—724 **12 Claims**

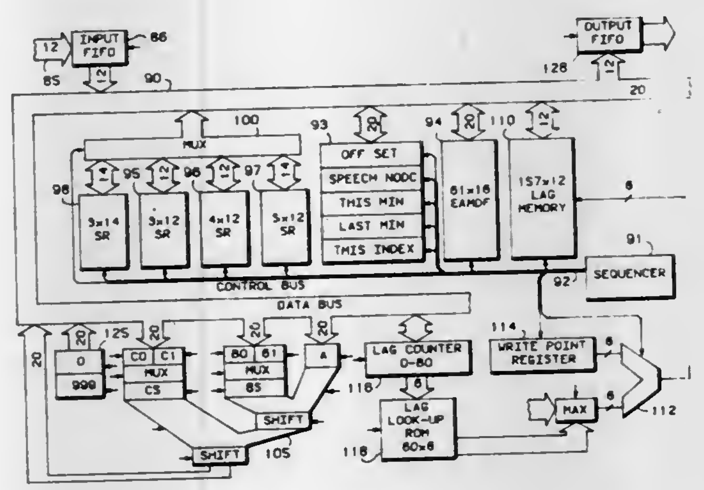

1. A high speed digital low pass filter comprising:
(a) a semiconductor chip;
(b) a data bus formed on said chip;
(c) a plurality of memory elements formed on said chip with each memory element of the plurality having a plurality of delay stages different than the plurality of delay stages for each of the other memory elements, and each of said plurality of memory elements having an input and an output operatively coupled to said bus;
(d) a plurality of storage devices formed on said chip and equal to the number of memory elements in said plurality of memory elements and each device being associated with a different one of said plurality of memory elements, each storage device having an input and an output operatively coupled to said bus;
(e) an arithmetic logic unit formed on said chip and having first, second and third inputs operatively coupled to said data bus, said logic unit further having an output for supplying signals equal to A±B±C, where A is a signal applied to the first input, B is a signal applied to the second input, and C is a signal applied to the third input; and
(f) system control means formed at least partially on said chip for first connecting data words to be filtered to the first input of said logic unit and to the input of one of said plurality of memory elements by way of said data bus, connecting the output of the one of said plurality of memory elements to the second input of said logic unit by way of said data bus, and connecting the output of the associated one of said plurality of storage devices to the third input of said logic unit by way of said data bus, and second connecting the output of said logic unit to the input of the associated one of said plurality of storage devices, to the first input of said logic unit and to the input of a second one of said plurality of memory elements by way of said data bus, connecting the output of the second one of said plurality of memory elements to the second input of said logic unit by way of said data bus, and connecting the output of the storage device associated with the second memory element to the third input of said logic unit by way of said data bus, a low pass filtered data word being available at the output of the logic unit.

4,373,192
DISPLAY DEVICE OF AN ELECTRONIC LANGUAGE INTERPRETER
Shigenobu Yanagiuchi, Tenri, and Ikuo Kanou, Yamatokoriyama, both of Japan, assignors to Sharp Kabushiki Kaisha, Osaka, Japan
Filed Aug. 25, 1980, Ser. No. 180,871
Claims priority, application Japan, Aug. 27, 1979, 54-109572; Aug. 29, 1979, 54-110800
Int. Cl.[3] G06G *15/38;* G08B *5/22*
U.S. Cl. 364—900 **8 Claims**

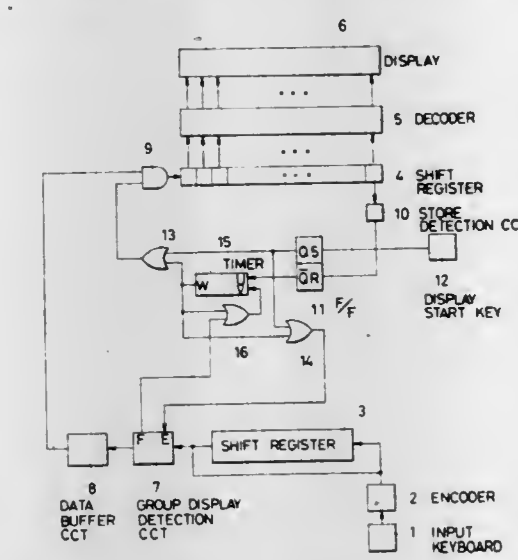

1. An electronic dictionary and language interpreter device wherein a first word represented in a first language is entered to obtain a second word or words represented in a second language equivalent to the first word, comprising:
input means for entering the first word;
memory means for storing a plurality of words of the second language inclusive of the second word or words and at least a mark for separating said second words or groups of said second words;
access means responsive to entry of the first word by said input means for addressing said memory means for retrieving the second word or words;
display means comprising means for displaying a predetermined number of characters and responsive to said access means for displaying the second word or words;
means associated with said display means for shifting the second word or words displayed thereon when the data length of the second word or words exceeds said predetermined number of characters;
means for detecting that said mark is displayed in a selected portion within the display means; and
means responsive to said detecting means for replacing all characters indicated on said display with a new display of up to said predetermined number of characters.

4,373,193
LOGIC STATE ANALYZER
George A. Haag, Colorado Springs; O. Douglas Fogg, Loveland; Gordon A. Greenley; Steve A. Shepard, both of Colorado Springs, all of Colo., and F. Duncan Terry, Meridan, Id., assignors to Hewlett-Packard Company, Palo Alto, Calif.
Continuation of Ser. No. 75,787, Sep. 17, 1979, abandoned, which is a continuation of Ser. No. 828,138, Aug. 29, 1977, abandoned. This application Nov. 25, 1980, Ser. No. 210,462
Int. Cl.[3] G06F *3/05, 3/153*
U.S. Cl. 364—900 **7 Claims**

1. Apparatus for selecting, storing and displaying a qualified subset of the states occurring in a collection of digital signals, the apparatus comprising:
control means for designating from among the collection of digital signals a qualification state and a trigger state;
input means coupled to receive the collection of digital signals for performing signal conditioning thereon according to preselected thresholds to produce a collection of conditioned signals;
qualification state detection means coupled to the collection of conditioned signals and to the control means for producing a qualifier signal upon the occurrence of the designated qualification state in the collection of conditioned signals;
trigger state detection means coupled to the collection of conditioned signals and to the control means for producing a trigger signal upon the occurrence of the designated trigger state in the collection of conditioned signals;

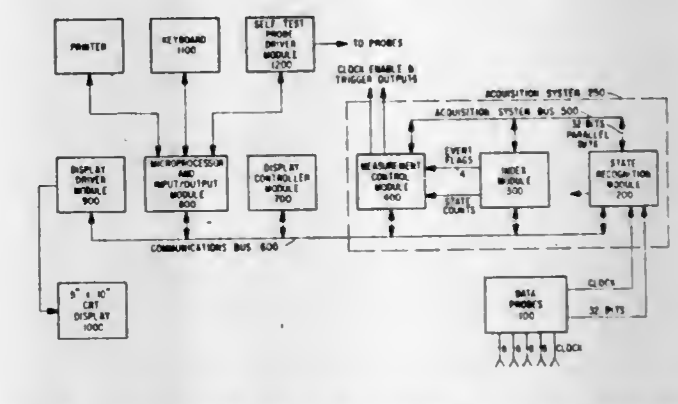

storage means coupled to the collection of conditioned signals, the qualifier signal and to the trigger signal for storing those states in the collection of conditioned signals producing the qualifier signal, until a preselected number of such storage operations occur subsequent to the occurrence of the trigger signal; and
display means coupled to the storage means for displaying the states stored therein.

4,373,194
FULL PAGE REPRESENTATION THROUGH DYNAMIC MODE SWITCHING
Kent R. Demke, Austin, and Jerold D. Dwire, Round Rock, both of Tex., assignors to International Business Machines Corporation, Armonk, N.Y.
Filed Dec. 30, 1980, Ser. No. 221,671
Int. Cl.[3] G06F *3/14*
U.S. Cl. 364—900 **10 Claims**

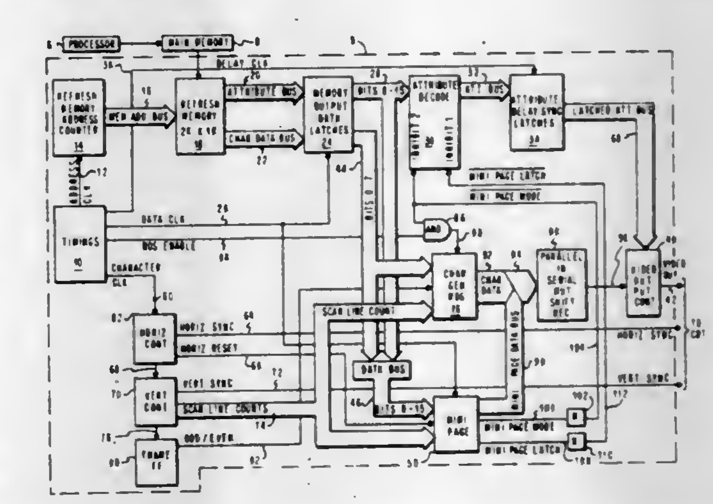

1. In a system including display screen means, memory means, printer means, and means for displaying a miniature representation of a full page of text being developed for output by said printer means,
the method of dynamically switching from displaying full size data representations to miniature data comprising the steps of:
(1) determining the width in spaces and the height in lines, of the miniature page;
(2) calculating the number of available spaces remaining after the miniature page width is determined;
(3) loading the portion of memory means associated with

said display means with full size character data for up to the number of spaces determined in the previous step, said full size character data being in the form of an attribute word and a character word;

(4) loading a predetermined attribute word, immediately after said full size character data, said predetermined attribute word being accessible by means for switching said display means into means for displaying a miniature page representation;

(5) loading in said memory means one more full size character word followed by miniature page data in all the memory locations for the remainder of the available spaces of said miniature page data being loaded in both attribute and character words.

4,373,195

SEMICONDUCTOR INTEGRATED CIRCUIT DEVICE

Kazuhiro Toyoda, Yokohama; Chikai Ono, Kawasaki, and Toshio Hayashi, Iruma, all of Japan, assignors to Fujitsu Limited, Kawasaki, Japan

Filed Oct. 24, 1980, Ser. No. 200,217

Claims priority, application Japan, Oct. 30, 1979, 54-140087

Int. Cl.³ G11C *11/40*

U.S. Cl. 365—154 **11 Claims**

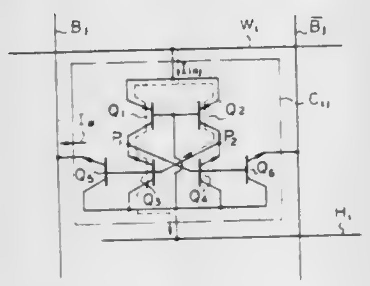

1. A semiconductor integrated circuit device comprising:

a plurality of word lines;

a plurality of word drivers, each said word driver being connected to one of said word lines;

a plurality of hold lines;

a plurality of pairs of bit lines;

a plurality of bit drivers, each said bit driver being connected to one of said pairs of bit lines;

a plurality of memory cells of integrated injection logic, each said memory cell being operatively connected to one of said plurality of word lines, to one of said plurality of hold lines and to one of said plurality of pairs of bit lines; and

a bit line clamp circuit operatively connected between said pairs of bit lines and a reference power supply, said clamp circuit comprising at least one dummy cell, any fluctuation of characteristics induced in each said dummy cell by manufacturing processes correspond to those of each said memory cell, so that a reference voltage of said reference power supply minus a voltage drop due to said bit line clamp circuit is applied to said plurality of pairs of bit lines.

4,373,196

DECODER CIRCUIT

Hideaki Isogai, Higashikurume, and Miki Tanaka, Kawasaki, both of Japan, assignors to Fujitsu Limited, Kawasaki, Japan

Filed Dec. 29, 1980, Ser. No. 220,970

Claims priority, application Japan, Dec. 27, 1979, 54-169186

Int. Cl.³ G11C *7/00*

U.S. Cl. 365—189 **6 Claims**

1. A decoder circuit comprising:

a plurality of outputs select lines, each having active and non-active states;

a differential amplifier circuit for receiving at least one line selection signal to be decoded and for generating an output signal in response to said line selection signal;

switching circuits operatively connected to said differential amplifier circuit, for providing a switching signal to activate selected lines of said output select lines according to the output signal supplied from said differential amplifier circuit; and

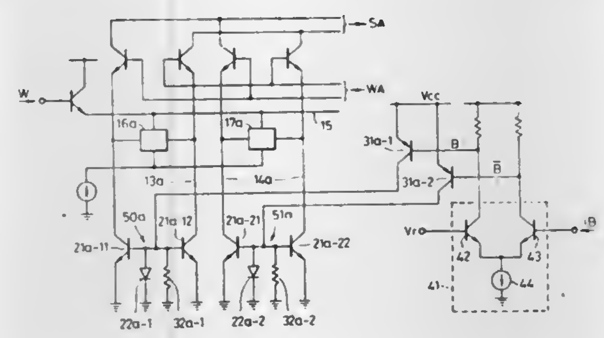

constant current supplying circuits correspondingly connected to said switching circuits and to said output select lines, for supplying constant current to the selected output select lines according to the switching signal supplied from said switching circuits, said switching circuits being connected in parallel with respect to said constant current supplying circuits.

4,373,197

EXPLORATION SYSTEM FOR ENHANCING THE LIKELIHOOD OF PREDICTING LITHOLOGY OF EARTH FORMATIONS ASSOCIATED WITH DEPOSITS OF ORE, MARKER ROCK AND/OR ECONOMIC MINERALS

Gary S. Gassaway, San Rafael; William R. Scott, El Cerrito, and Richard J. Runge, Anaheim, all of Calif., assignors to Chevron Research Company, San Francisco, Calif.

Continuation of Ser. No. 971,627, Dec. 20, 1978, abandoned. This application Aug. 8, 1980, Ser. No. 176,605

Int. Cl.³ G01V *1/30*

U.S. Cl. 367—36 **12 Claims**

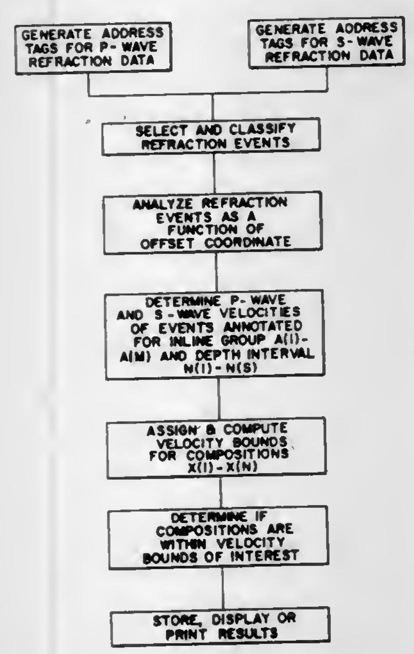

1. Method of accurately determining lithology of an earth formation to identify ore, marker rocks, economic minerals or the like, using a refraction exploration field system including a series of detectors, positioned along a line or survey at inline positions $X_1, X_2, \ldots X_n$ and at least one seismic source located adjacent to said detectors for producing a seismic wave for travel through said formation:

(a) generating a seismic wave at a first sourcepoint location adjacent said series of detectors;

(b) after said wave undergoes refraction, detecting arrival of a refracted wave at said series of detectors at said inline offset positions, to obtain a first set of traces associated with said offset positions $X_1, X_2, \ldots X_n$;

(c) repeating steps (a) and (b) by generating a second wave at a second sourcepoint adjacent to inline position X_n of said detector positions, and detecting said refracted wave to obtain a second set of traces;

(d) advancing said series of detectors a selected number of inline positions or fractions thereof and repeating steps (a), (b) and (c) above to obtain additional sets of traces, but in which said additional sets of traces are associated with more than two inline positions overlapping common inline positions of said first and second sets of traces;

(e) distinguishing arrival times of shear waves from compressional waves so as to indicate true compressional and shear wave velocities associated with a series of depth intervals within said earth formation;

(f) after computing compressional and shear wave velocity values for a plurality of mineral compositions of variable size, comparing such computed values with said indicated true compressional and shear wave velocities of step (e) whereby the lithology of said earth formation can be accurately predicted.

4,373,198

UPDATING AND ALERTING METHOD AND APPARATUS ASSOCIATED WITH A MICROCOMPUTER SYSTEM FOR AUTOMATICALLY INDICATING AND RECORDING PARAMETERS THAT SPATIALLY DEFINE LOCATIONS OF SEISMIC EXPLORATION SPREAD AND SOURCE ARRAYS

H. T. Carruth, Jr., Anaheim, Calif., assignor to Chevron Research Company, San Francisco, Calif.

Filed Jul. 16, 1980, Ser. No. 169,334

Int. Cl.³ G01V *1/20, 1/28;* **G08C** *25/00*

U.S. Cl. 367—37 **8 Claims**

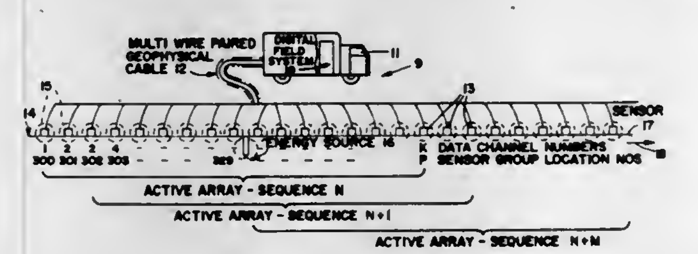

1. Method of selectively providing an alarm-generating digital code so as to alert an operator that a next-in-time array positions of a source-detector array associated with a recording truck are the last approved array locations, using a microcomputer system that includes an MPU, memory means and a series of display, switching and alarm means interconnected via a system bus, comprising:

(a) storing as data bits, information as to the maximum number of detectors or detector groups accommodated by a fixed roll switch matrix size associated with said array;

(b) at the end of each seismic data collection cycle, determining a difference value between (a) and the total number of detectors or detector groups that will have been employed at the end of the next-in-time collection cycle, and using said difference value to conditionally generate said alarm-generating digital code so as to alert said operator when the next-in-time positions are the last approved array locations for said source-detector array.

4,373,199

APPARATUS FOR ELECTROMAGNETICALLY IMPARTING STYLUS FORCE FOR SOUND REPRODUCING DEVICE COMPRISING AN INHIBIT CIRCUIT FOR SHOCK NOISE OF REPRODUCING STYLUS

Katsumi Watanabe, Kawasaki, Japan, assignor to Ozen Corporation, Tokyo, Japan

Filed Apr. 10, 1981, Ser. No. 252,952

Claims priority, application Japan, Apr. 15, 1980, 55/49404; Jun. 17, 1980, 55/82003

Int. Cl.³ G11B *1/00, 25/04*

U.S. Cl. 369—31 **5 Claims**

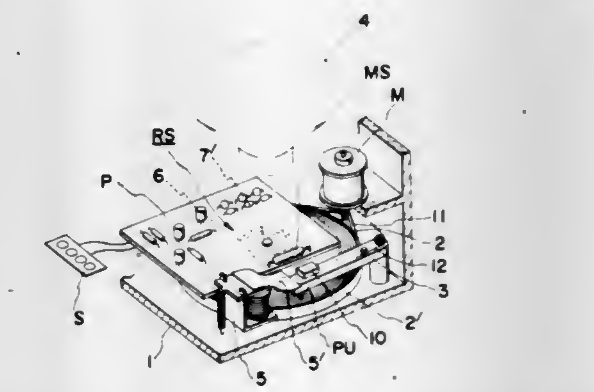

1. An apparatus for electromagnetically imparting stylus force for a sound reproducing device having a recorded disc rotatably supported on a chassis, an electric motor for driving said disc, a tone arm biased both in the direction away from said disc and in the direction toward a starting position of reproduction, said apparatus comprising:

electromagnetic actuator means having an armature for urging said tone arm toward the recorded surface of said disc when said actuator is energized;

rotary switch means disposed between said chassis and said recorded disc and including a rotary contact and a plurality of fixed contacts, said rotary switch means being arranged such that said rotary contact rotates with the rotation of said recorded disc so as to be in contact sequencially with said fixed contacts, said fixed contacts and a position toward which a pickup of said tone arm is lowered being arranged in a predetermined positional relationship so that said pickup may engage the reproduction start point of a specified one of recorded grooves provided circumferentially on said recorded disc;

an electric power source;

a motor circuit connected across said power source and including a motor and a first transistor connected in series with said motor;

an actuator transistor circuit means connected in series with said electromagnetic actuator means, the series connection between said actuator transistor circuit means and said electromagnetic actuator means being connected across said power source; a series circuit consisting of start switching means, a normally open magnetic sensitive read switch and a capacitor, said series circuit being connected across said power source;

a base of said first transistor being connected to said power source through said start switching means;

a base of said actuator transistor circuit means being connected to said rotary contact of said rotary switch means;

a second transistor arranged for self holding, a base of said second transistor being connected to the connection between said electromagnetic actuator means and a collector of said actuator transistor circuit means, an emitter of said second transistor being connected to said series circuit, a collector of said second transistor being connected to the connection between said rotary contact and said actuator transistor circuit means;

magnet means provided on said tone arm; and

said reed switch being disposed at an end position of the sound reproduction of said recorded disc,

4,373,200
TURNTABLE MOUNTINGS FOR RECORD PLAYERS
Peter B. Dunlop, Troon, Scotland, assignor to Aristoscot Designs Limited, Troon, Scotland
Filed Jan. 15, 1980, Ser. No. 112,295
Claims priority, application United Kingdom, Jan. 18, 1979, 7901804; Jun. 7, 1979, 7919861
Int. Cl.³ G11B *19/20*
U.S. Cl. 369—263 **7 Claims**

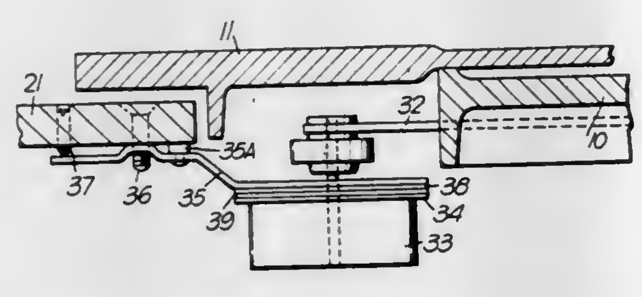

1. Phonographic apparatus comprising a carcass, a rotatable platter having a rotational axis, a motor drivingly coupled to the platter, a pickup arm assembly having a mounting point, and a platform mounting the platter, the platform being resiliently mounted in the carcass; in which said platform extends along a line between the rotational axis of the platter and the mounting point of the pickup assembly, and the pickup assembly is mounted on one end of said platform; where the motor is mounted to the carcass by adjustable mounting means which are adjustable to position the motor in both height and attitude with respect to the platter and where said mounting means comprises a bracket which carries said motor at one end and which is secured at its other end to the underface of a closure plate detachably secured to the top of the carcass, the bracket being secured to the closure plate by means of two bolts, said mounting means further including a set-screw positioned to one side of the bolts and passing through the closure plate into engagement with the bracket, and a resilient stud positioned to the other side of the bolts and located between the bracket and the closure plate, said bolts and set-screw being adjustable to set said motor at the correct height and attitude in relation to said platform.

4,373,201
FAIL SAFE DIGITAL TIMER
John E. Bohan, Jr., Minneapolis, Minn., assignor to Honeywell Inc., Minneapolis, Minn.
Filed Nov. 28, 1980, Ser. No. 210,967
Int. Cl.³ G06F *11/16*
U.S. Cl. 371—68 **10 Claims**

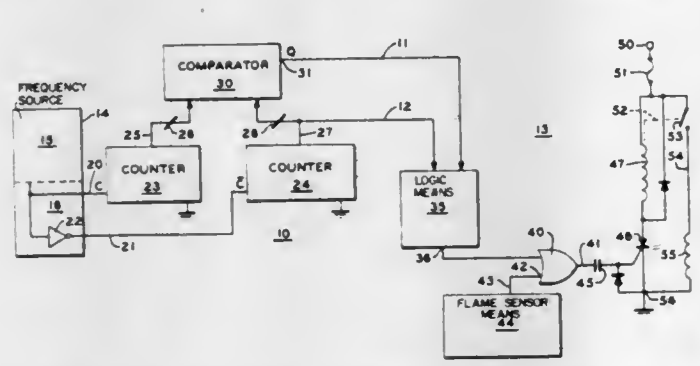

1. A fail safe digital timer, including: clock means having output means providing clock pulses and complimentary clock pulses; first counter means connected to said clock output means to receive said clock pulses with said first counter means having output means to provide first counter codes; second counter means connected to said clock output means to receive said complimentary clock pulses with said second counter means having output means to provide second counter codes; comparator means connected to the output means of said counter means to compare said first and said second counter codes; said comparator means having a repetitive output signal upon both said counter means successfully counting the clock pulses and the complimentary clock pulses; said repetitive output signal ceasing upon the failure of the proper outputs being present from said clock means, said counter means, and said comparator means; and load means connected to said repetitive output signal and the counter codes from said second counting means; said load means being responsive to the presence or absence of said repetitive output signal from said comparator means along with the counter codes from said second counter means.

4,373,202
RF EXCITED WAVEGUIDE GAS LASER
Katherine D. Laakmann, and Peter Laakmann, both of Laguna Niguel, Calif., assignors to Waiwel, Inc.
Filed Sep. 24, 1979, Ser. No. 78,343
Int. Cl.³ H01S *3/05*
U.S. Cl. 372—64 **14 Claims**

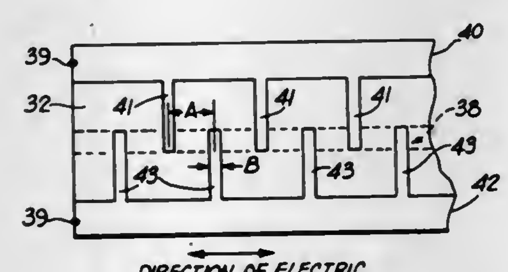

1. In an rf excited waveguide laser of the type having means defining an elongated chamber of a specified length and of cross-sectional dimensions suitable for guiding laser light and for generating therein a laser-exciting discharge and an active laser gas disposed in said chamber, said laser gas having a laser transition capable of providing stimulated emission of quanta of light energy at a desired wavelength, wherein the improvement comprises:

means for establishing an alternating electric field in said chamber along a direction parallel to the length thereof to establish the laser-exciting discharge in said laser gas, said means for establishing an alternating electric field including first and second pluralities of electrically conductive elements disposed interdigitally and transverse to the length of said chamber along at least a first elongated wall thereof.

4,373,203
CIRCUIT ARRANGEMENT AND METHOD FOR ASSESSING COMMUNICATION ACTIVITY ON A PARTICULAR RADIO COMMUNICATION CHANNEL
Stephen L. Rhodes, Reading, England, assignor to Racal Communications Equipment Limited, Bracknell, England
Filed Sep. 22, 1980, Ser. No. 189,146
Claims priority, application United Kingdom, Sep. 28, 1979, 7933705
Int. Cl.³ H04B *1/10*
U.S. Cl. 375—10 **7 Claims**

1. A circuit arrangement responsive to an alternating input signal for assessing the level of the signal within a predetermined passband, comprising

a passband filter tuned to the predetermined passband,

means for switching the input signal into the filter at a time t_1,

means for providing a time delay of a predetermined length beginning at t_1,

means for selectively sampling the level of the output signal of the filter, said sampling means being coupled to time delay means so as to be operative at at least one predetermined instant in time which is after the end of said time delay and which is selected such that the magnitude of the

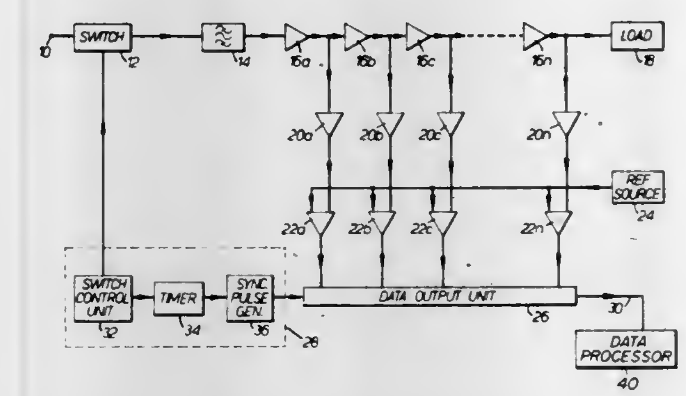

envelope of the transient signals due to frequencies present in the output signal of the filter but outside the passband is temporarily at a minimum, and

means for assessing the level of the output of the filter at the or each said time instant thereby to assess the level of the signal within the predetermined passband while avoiding interference from signals outside the passband.

4,373,204
PHASE LOCKED LOOP TIMING RECOVERY CIRCUIT
Grant P. Brooks, Randolph, N.J., assignor to Bell Telephone Laboratories, Incorporated, Murray Hill, N.J.
Filed Feb. 2, 1981, Ser. No. 230,760
Int. Cl.³ H04L *7/08*
U.S. Cl. 375—120 **4 Claims**

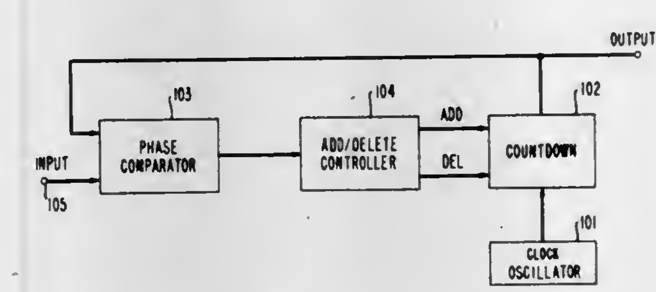

1. A timing wave recovery circuit comprising:

means for generating phase shiftable timing wave signals,

means for developing analog phase error signals whose amplitudes define magnitudes of phase differences between the timing wave signals and input signals,

timing means arranged to pass from an initial condition to an operated condition after an interval of time in response to a persistance of the phase error signals,

means responsive to the operated condition of the timing means for repeatedly shifting the phase of the timing wave signals, and

means responsive to discontinuance of the phase error signals for resetting the timing means without delay to the initial condition.

4,373,205
RADIO SUBSCRIBER SYSTEM WITH EFFICIENT USE OF RADIO FREQUENCY CARRIER WAVES
Yasuhiro Mizota, Tokyo, Japan, assignor to Nippon Electric Co., Ltd., Tokyo, Japan
Filed Jun. 9, 1980, Ser. No. 157,797
Claims priority, application Japan, Jun. 12, 1979, 54-74107
Int. Cl.³ H04B *1/40*
U.S. Cl. 455—86 **2 Claims**

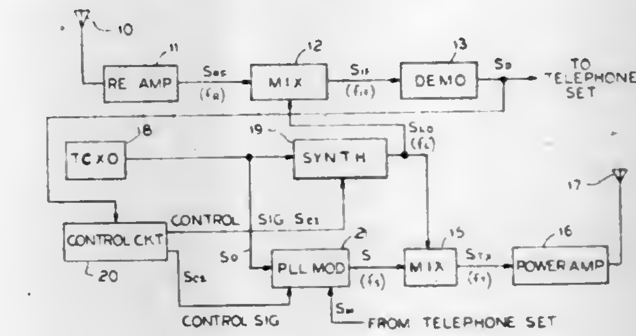

1. A channel-switching system comprising:

a plurality of channels, each of which transmits and receives over individually associated a transmission and reception carrier waves with a frequency interval between said transmission and reception carrier waves, at least one of said frequency intervals on one of said channels being different from the other frequency intervals on other of said channels;

means for receiving the plurality of reception carrier waves;

means for transmitting the plurality of transmission carrier waves;

first mixer means coupled to said receiving means for frequency-mixing the output of said receiving means with an oscillation signal;

means coupled to said first mixer means for demodulating the output of said first mixer means;

means for generating a reference frequency signal;

modulation means responsive to a first control signal for converting said reference frequency signal into one of a plurality of carrier waves respectively corresponding to said plurality of transmission carrier waves and for modulating the converted signal with a signal which is to be transmitted;

second mixer means coupled to said modulation means for frequency-mixing the output of said modulation means and said local oscillation signal and for supplying the frequency-mixed signal to said transmitting means as one of said plurality of transmission carrier waves;

frequency-synthesizing means responsive to a second control signal for frequency-synthesizing said reference frequency signal to provide said local oscillation signal and for supplying it to said first and second mixer means;

means responsive to the output of said demodulation means for detecting a signal designating a channel number; and

means responsive to the detected signal for supplying said first and second control signals to said modulation means and said frequency-synthesizer means, respectively.

4,373,206
TRANSMITTER CONTROL SYSTEM
Yoshiharu Suzuki, and Tomokazu Kai, both of Toyko, Japan, assignors to Nippon Electric Co., Inc., Tokyo, Japan
Filed Dec. 24, 1980, Ser. No. 220,132
Claims priority, application Japan, Dec. 28, 1979, 54-170433
Int. Cl.³ H04B *1/02, 3/60*
U.S. Cl. 455—103 **5 Claims**

1. In a multi-channel mobile radio transmitter, a transmitter control system comprising:

transmitter means for transmitting one of multiple channel frequencies;

output power control means for controlling the transmitter means so as to reduce the transmitter output;
channel switching means for selecting one of the multiple channel frequencies to be transmitted from the transmitter means; and

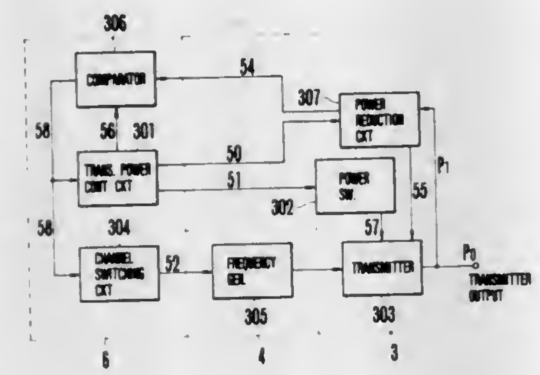

comparator means for comparing a transmitter activation signal with a signal from the transmitter output so that a comparison signal produced upon occurrence of failure of the transmitter means drives the channel switching means and the output power control means to select another channel and to reduce the transmitter output, respectively.

4,373,207

SPACE DIVERSITY SIGNAL COMBINER

Rudolf P. Hecken, Andover, Mass., assignor to Bell Telephone Laboratories, Incorporated, Murray Hill, N.J.

Filed Dec. 17, 1980, Ser. No. 217,567

Int. Cl.³ H04B *7/08*

U.S. Cl. 455—139 **3 Claims**

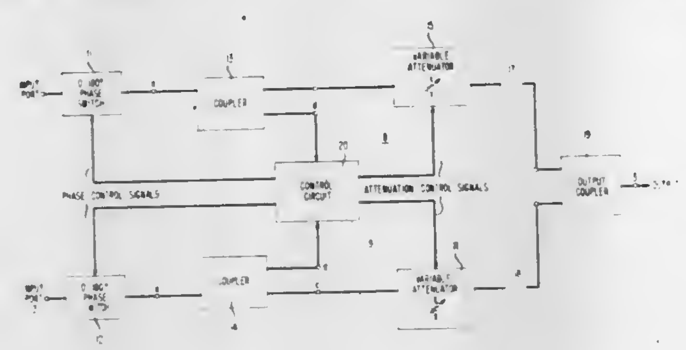

1. A signal combiner **10** for combining two signals (A, $Be^{j\phi}$) whose magnitudes (A, B), and relative phase (ϕ) are variable, comprising;
first and second signal path **(8, 9)**;
control means **(13, 14, 20)** for sensing the magnitudes (A, B) and the relative phase (ϕ) between the signals in said paths and for generating attenuation control signals in response thereto;
attenuator means **(15, 16)** responsive to said attenuation control signals for causing the attenuation in the signal path handling the smaller of said two signals to vary as a function of said relative phase;
and means **(19)** for combining the signals in said signal paths **(8, 9)** in a common output **(3)**.

4,373,208

CIRCUIT ARRANGEMENT FOR TUNING INTO ONE OF A NUMBER OF RADIOELECTRIC SIGNALS

Pietro Belisomi, Pinerolo, Italy, assignor to Indesit Industria Elettrodomestici Italiana S.p.A., Italy

Filed Dec. 19, 1978, Ser. No. 971,073

Claims priority, application Italy, Dec. 30, 1977, 69950 A/77

Int. Cl.³ H03J *5/00*

U.S. Cl. 455—186 **28 Claims**

1. A circuit arrangement for tuning to one of a number of radioelectric signals receivable on a signal receiver set comprising:
a controllable oscillator exhibiting a variable output frequency signal depending upon a binary number N;
frequency divider means for receiving said output signal from said controllable oscillator and a sequence of coded signals representing said binary number N and producing a first output signal whose frequency depends upon said binary number N;
means for producing a reference signal having a predetermined frequency in the form of a second output signal;
comparator means for comparing said first and second output signals and producing a third signal for required tuning, said third signal being applied to said controllable oscillator for varying the output frequency thereof as a function of the binary number N;
memory means having a plurality of storage locations for storing data relative to signals tuned in digital form;
means for selectively generating coded input data; and

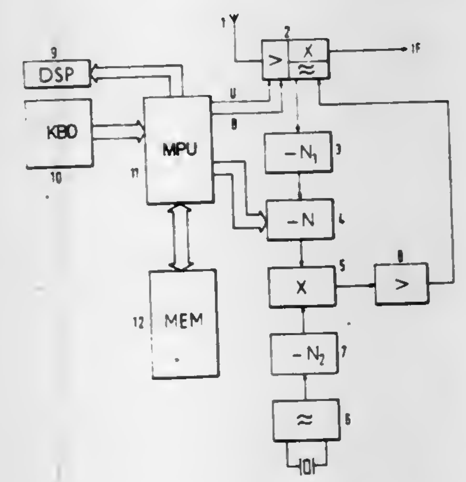

processor means responsive to said coded input data for supplying a sequence of coded signals representing said binary member N to said frequency divider means, said processor means being selectively responsive to said coded input data to sequentially scan said storage locations of said memory means in automatic or manual, step-by-step modes and to supply said sequence of coded signals representing said binary number N both in direct response to said coded input data and in response to data provided by said memory means, said processor means being set in response to coded input data taking the form of a first coded input signal to generate a particular sequence of N numbers corresponding to the total number of receivable radioelectric signals according to a pre-established transmission standard and responsive to coded input data taking the form of a second coded input signal to advance the number N within said particular sequence by one increment.

4,373,209

METHOD AND CIRCUITRY FOR CONTROLLING THE INTERMEDIATE FREQUENCY OF AN FM RECEIVER TO LESSEN PHASE DISTORTION

Ryoichi Kaneda, Tokyo, Japan, assignor to Trio Kabushiki Kaisha, Tokyo, Japan

Filed Feb. 17, 1981, Ser. No. 234,960

Claims priority, application Japan, Mar. 10, 1980, 55-29878

Int. Cl.³ H04B *1/26*

U.S. Cl. 455—203 **8 Claims**

1. Circuitry for controlling the intermediate frequency signal occurring at an intermediate frequency amplification stage of an FM receiver having FM signals applied thereto comprising
modulating means for frequency modulating the intermediate frequency signal with a modulating signal of predetermined frequency where said modulating means includes a voltage controlled oscillator, the output of which is mixed with the FM signals applied to the receiver and a sine wave generator, the output of which FM modulates the voltage controlled oscillator;
detecting means for detecting the absolute amount of distortion incurred by said modulating signal of predetermined frequency at the intermediate frequency amplification stage of the FM receiver; and
control means for changing the intermediate frequency by incremental amounts to control the intermediate frequency so that the distortion at the intermediate frequency amplification stage is minimized in accordance with any increase or decrease in the distortion detected by said detecting means where said control means includes means

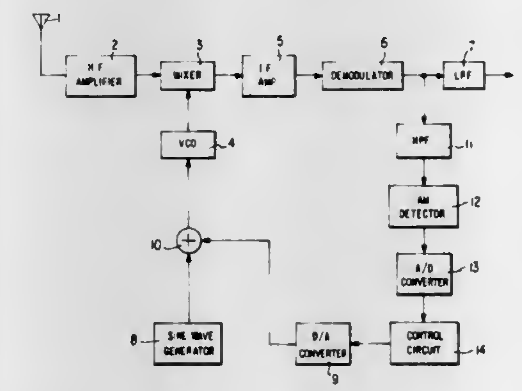

for generating a DC signal which is added to the output of the sine wave generator where the DC signal determines the central frequency of the voltage controlled oscillator; means for establishing an initial value of said DC voltage and the value of an incremental voltage; means for successively adding or subtracting said incremental voltage from the initial DC voltage to obtain an incremented DC voltage; comparison means for comparing the incremented DC voltage before and after each increment thereof; and means responsive to the comparison means for continuing the incrementing of the DC voltage until the distortion at the intermediate frequency amplification stage is minimized.

4,373,210

SPACE DIVERSITY COMBINER

Peter D. Karabinis, Atkinson, N.H., and Hotze Miedema, Boxford, Mass., assignors to Bell Telephone Laboratories, Incorporated, Murray Hill, N.J.

Filed Mar. 27, 1981, Ser. No. 248,356

Int. Cl.³ H04B *1/06*

U.S. Cl. 455—273 **2 Claims**

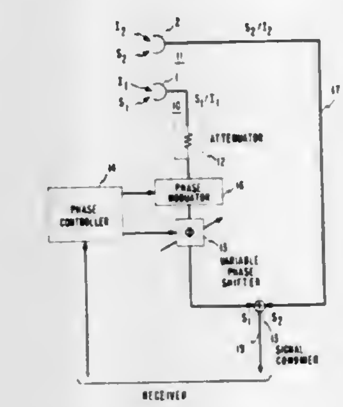

1. A space diversity combiner comprising:
first and second antenna circuits **(10, 11)**;
means **(15)** for combining the signals (S_1 and S_2) in said circuits in a common output circuit **(19)**;
and attenuating means **(12)** disposed in the antenna circuit **(10)** having the smaller signal-to-interference ratio (S_1/I_1);
said attenuator being adjusted to reduce the contribution of the signal (S_1) in the antenna circuit **(10)** having the smaller signal-to-interference ratio such that the attenuated signal power S_1' at the input of said combining means **(15)** is given by

$$S_1'/S_2=(S_1/I_1)/S_2/I_2$$

where
S_1/I_1 and S_2/I_2 are the signal-to-interference power ratios for the two antennas; and

$$S_1/I_1<S_2/I_2.$$

DESIGNS

FEBRUARY 8, 1983

267,830
DRESS FOR THE INFIRM
Arnette R. Arnseth, Four Maida Ct., Red Bank, N.J. 07701, and Theresa A. Celendano, Four Knollwood Rd., Holmdel, N.J. 07733
Filed Feb. 19, 1980, Ser. No. 122,749
Term of patent 14 years
Int. Cl. D2—*02*

U.S. Cl. D2—82

267,831
HEAD CAP FOR HOLDING ELECTRICAL PROBES AND MEDICAL DISPENSERS
Edward Sucato, 3015 E. Thomas Rd., Ste. 18, Phoenix, Ariz. 85016
Filed May 8, 1980, Ser. No. 148,031
Term of patent 14 years
Int. Cl. D02—*03*

U.S. Cl. D2—230

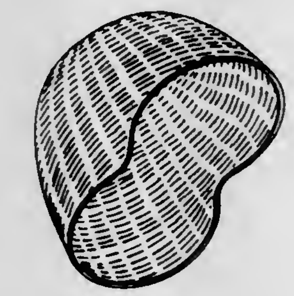

267,832
DISPOSABLE BOOT
James B. Pask, 2812 Bree Hill Rd., Oakton, Va. 22124
Filed Nov. 8, 1979, Ser. No. 92,278
Term of patent 14 years
Int. Cl. D2—*04*

U.S. Cl. D2—271

267,833
COMBINED CLASP AND TOGGLE FOR NECKTIE OR THE LIKE
Arne E. E. Anderson, 3101 NW. 75th St., Seattle, Wash. 98117
Filed Sep. 15, 1980, Ser. No. 187,179
Term of patent 14 years
Int. Cl. D2—*07*

U.S. Cl. D2—407

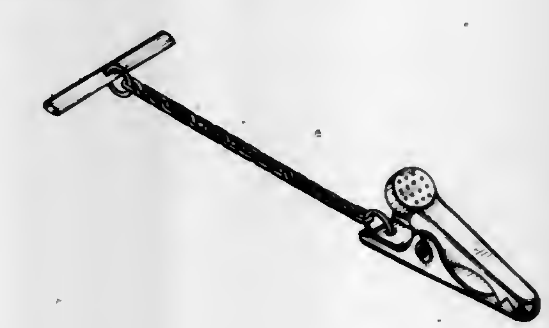

267,834
DOCTOR'S ATTACHE CASE
Siang Y. Tow, 30 Dickens St., Penang, Malaysia
Filed Sep. 19, 1980, Ser. No. 188,693
Claims priority, application United Kingdom, Mar. 20, 1980, 994146
Term of patent 14 years
Int. Cl. D3—*01*
U.S. Cl. D3—74

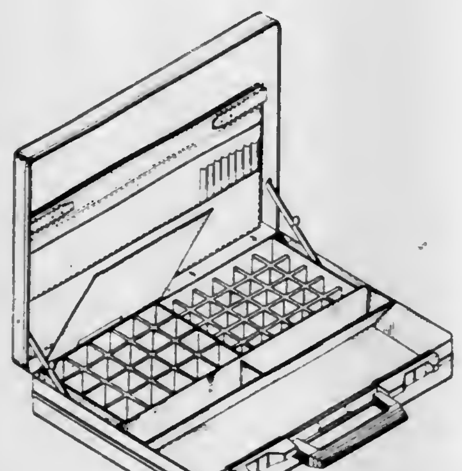

267,835
LUGGAGE
Ted Stark, Montclair, N.J., assignor to M/M Verdi International, Inc., Jersey City, N.J.
Filed Apr. 7, 1982, Ser. No. 366,402
Term of patent 14 years
Int. Cl. D3—*01*
U.S. Cl. D3—71

267,836
BOX FOR FILE CARDS
Henri Benichou, Paris, France, assignor to Galerie Shirvane, Paris, France
Filed Aug. 28, 1980, Ser. No. 182,318
Claims priority, application France, Mar. 4, 1980, 80 0668
Term of patent 14 years
Int. Cl. D3—*02*
U.S. Cl. D3—78

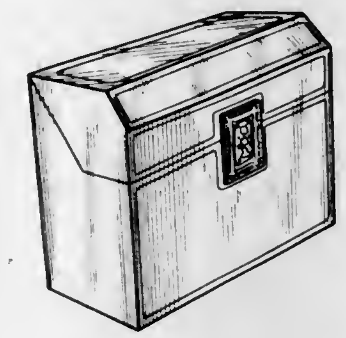

267,837
HELIODON
Joseph C. Migani, 8200 Knollwood Cir., Charlotte, N.C. 28213, and Charles C. Benton, Atlanta, Ga., assignors to Joseph C. Migani, Charlotte, N.C.
Filed Jun. 13, 1980, Ser. No. 159,068
Term of patent 14 years
Int. Cl. D6—*99*
U.S. Cl. D6—27

267,838
CHAIR
Randall P. Buhk, Wyoming; Kenneth W. Hozeski, Grandville, and Alex Karrip, Grand Rapids, all of Mich., assignors to Steelcase Inc., Grand Rapids, Mich.
Filed Nov. 5, 1979, Ser. No. 91,694
Term of patent 14 years
Int. Cl. D6—*01*
U.S. Cl. D6—31

267,839
BED HEADBOARD OR SIMILAR ARTICLE
Sidney A. Lenger, Jr., Jamestown, N.C., assignor to The Singer Company, Stamford, Conn.
Filed Sep. 12, 1980, Ser. No. 186,775
Term of patent 14 years
Int. Cl. D6—*01*
U.S. Cl. D6—80

267,840
TOWEL RACK
Piet Cohen, Amsterdam, Netherlands, assignor to Materias Plasticas, Limitada, Leiria, Portugal
Filed Nov. 4, 1980, Ser. No. 204,031
Claims priority, application Portugal, May 9, 1980, 15.094
Term of patent 14 years
Int. Cl. D23—*02*
U.S. Cl. D6—99

267,841
COMBINED SUPPORT FOR BEVERAGE COOLER AND DRINKING GLASSES
Dennis R. Leslie, 9722 Rose Dr., Taylor, Mich. 48180
Filed Aug. 6, 1980, Ser. No. 175,609
Term of patent 14 years
Int. Cl. D6—*04*; D12—*16*
U.S. Cl. D6—130

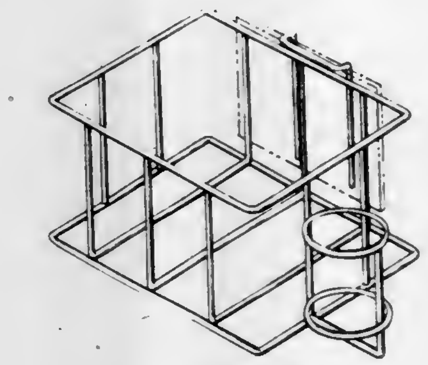

267,842
STORAGE UNIT
Anthony J. Brescia, Liverpool, and Spencer Rhoads, Baldwinsville, both of N.Y., assignors to Syroco, Inc., Syracuse, N.Y.
Filed Apr. 1, 1981, Ser. No. 249,852
Term of patent 14 years
Int. Cl. D6—*04*
U.S. Cl. D6—131

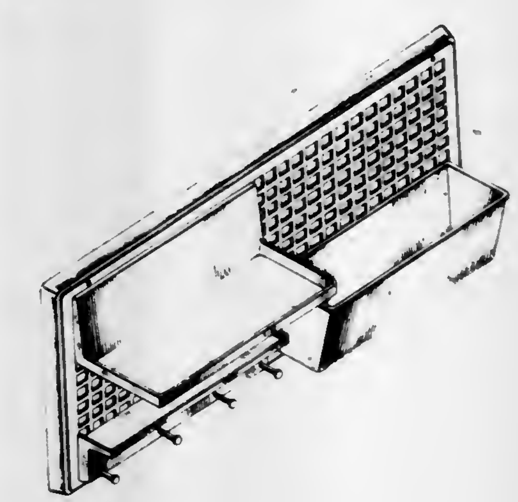

267,843
RACK FOR APPLIANCES OR THE LIKE
Darrell W. Sundberg, 2110 Hamline North, Roseville, Minn. 55113
Filed Jul. 20, 1979, Ser. No. 59,481
Term of patent 14 years
Int. Cl. D6—*04*
U.S. Cl. D6—132

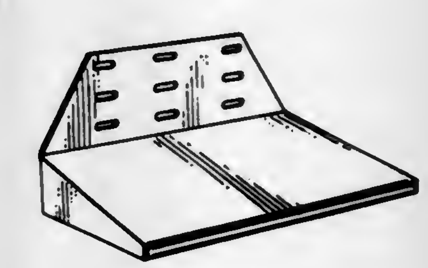

267,844
SHELF
Piet Cohen, Amsterdam, Netherlands, assignor to Materias Plasticas, Limitada, Leiria, Portugal
Filed Nov. 4, 1980, Ser. No. 204,026
Claims priority, application Portugal, May 9, 1980, 15.092
Term of patent 14 years
Int. Cl. D6—*04*
U.S. Cl. D6—136

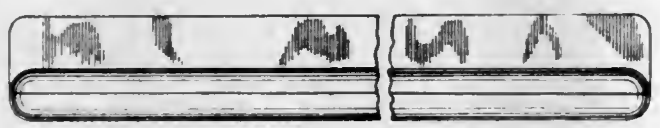

267,845
DRESSER OR SIMILAR ARTICLE
Sidney A. Lenger, Jr., Jamestown, N.C., assignor to The Singer Company, Stamford, Conn.
Filed Sep. 12, 1980, Ser. No. 186,816
Term of patent 14 years
Int. Cl. D06—*04*
U.S. Cl. D6—154

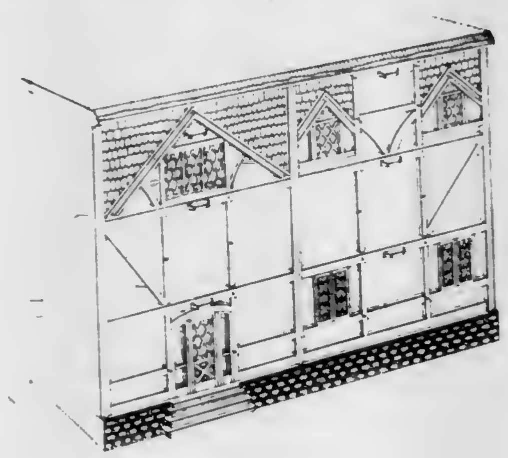

267,846
DESK OR SIMILAR ARTICLE
Warren Platner, Guilford, Conn., assignor to Litton Business Systems, Inc., Burlington, Iowa
Division of Ser. No. 914,285, Jun. 9, 1978. This application Jan. 9, 1981, Ser. No. 223,753
Term of patent 14 years
Int. Cl. D6—*04*
U.S. Cl. D6—161

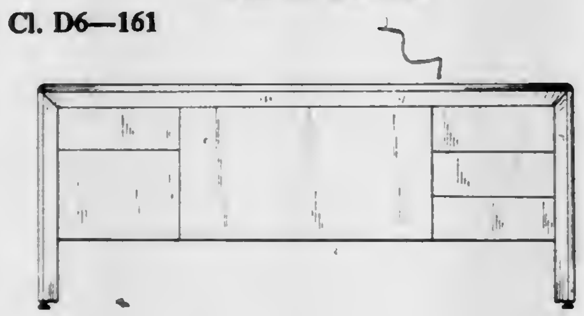

267,847
COMBINED SPICE RACK AND STORAGE UNIT
Fred T. Pielert, 4804 Washburn Ave. South, Minneapolis, Minn. 55410
Filed Nov. 13, 1980, Ser. No. 206,457
Term of patent 14 years
Int. Cl. D06—*04*
U.S. Cl. D6—188

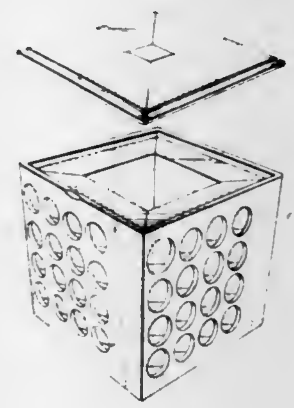

267,848
COMBINED SERVING TRAY AND CONDIMENT DISHES
Jeanette M. Dowling, 11521 Torrey Rd., Fenton, Mich. 48430
Filed Feb. 1, 1980, Ser. No. 117,431
Term of patent 14 years
Int. Cl. D07—*06, 99*
U.S. Cl. D7—3

267,849
EMBOSSED BEVERAGE OR PACKAGING CUP
Van D. Groenewold; Hubert E. Christian, and James P. Schwartz, all of Phoenix, Ariz., assignors to Dart Industries Inc., Los Angeles, Calif.
Filed Jan. 7, 1980, Ser. No. 110,023
Term of patent 14 years
Int. Cl. D07—*01;* D09—*03*
U.S. Cl. D7—6

267,850
EMBOSSED BEVERAGE OR PACKAGING CUP
Van D. Groenewold; Hubert E. Christian, and James P. Schwartz, all of Phoenix, Ariz., assignors to Dart Industries Inc., Los Angeles, Calif.
Filed Jan. 7, 1980, Ser. No. 110,054
Term of patent 14 years
Int. Cl. D07—*01*
U.S. Cl. D7—6

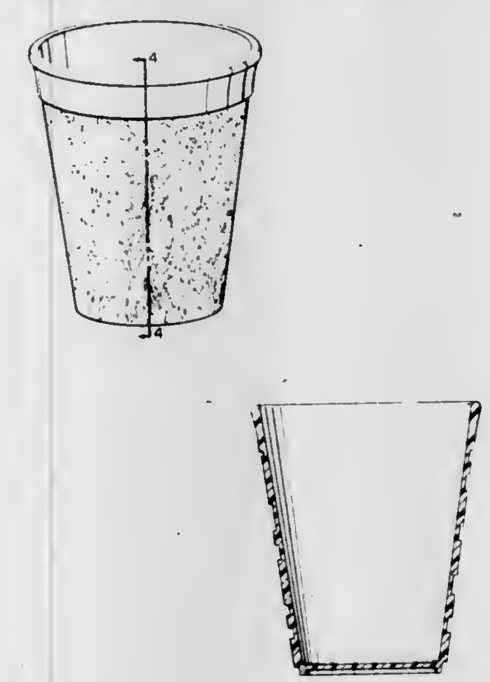

267,851
COMBINATION MICROWAVE AND CONVECTION OVEN
Melvin H. Boldt, Glenview; James P. Stevens, Oak Park, and Chester J. Wojtowicz, Prospect Heights, all of Ill., assignors to Amana Refrigeration, Inc., Amana, Iowa
Filed Oct. 14, 1980, Ser. No. 196,678
Term of patent 14 years
Int. Cl. D7—*02*
U.S. Cl. D7—351

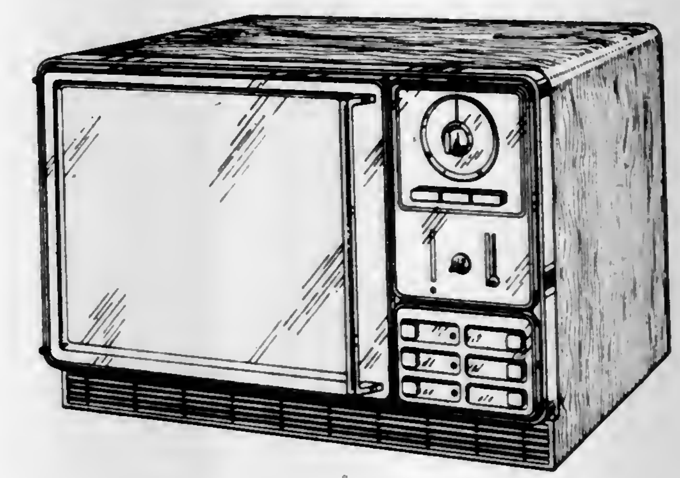

267,852
KNIFE OR SIMILAR ARTICLE
Bert England, Los Angeles, Calif., assignor to Towle Manufacturing Company, Boston, Mass.
Division of Ser. No. 33,572, Apr. 27, 1979, abandoned. This application Jun. 26, 1981, Ser. No. 278,372
Term of patent 14 years
Int. Cl. D07—*03*
U.S. Cl. D7—137

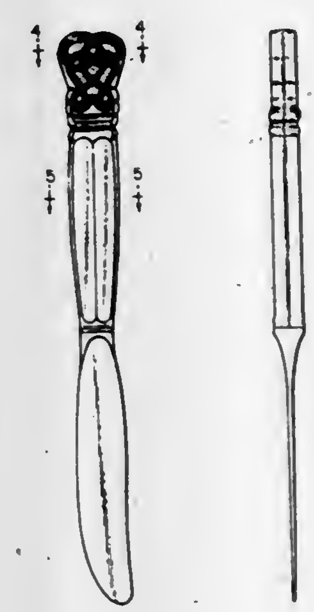

267,853
GLASS CUTTER
Toshimitsu Arai, 2-3, 1-cho, Koryohigashi-machi, Sakai-shi, Osaka-fu, Japan
Filed Dec. 12, 1980, Ser. No. 215,930
Term of patent 14 years
Int. Cl. D8—*03*
U.S. Cl. D8—51

267,854
FLASK OR SIMILAR ARTICLE
Frank H. Witt, Jr., Trumbull, Conn., assignor to Rosalie S. Levine, Trumbell; Mildred J. Bisacca, Fairfield and GRRN Company, Easton, all of, Conn., a part interest
Filed Oct. 15, 1980, Ser. No. 197,334
Term of patent 14 years
Int. Cl. D9—*01*
U.S. Cl. D9—307

267,855
PRESSURIZED CONTAINER PISTON
Floyd R. French, St. Louis, Mo., assignor to Clayton Corporation, St. Louis, Mo.
Filed Apr. 28, 1980, Ser. No. 144,762
Term of patent 14 years
Int. Cl. D9—*07*
U.S. Cl. D9—434

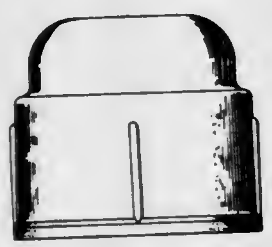

267,856
BEVERAGE DISPENSING CONTAINER
Jack R. Smith, Rte. #1, Box 172, Mineral Point, Mo. 63660
Filed May 1, 1980, Ser. No. 145,676
Term of patent 14 years
Int. Cl. D9—*01*
U.S. Cl. D9—337

267,857
DISPLAY HOLDER
Barbara Astor, Pelham Manor, and Terry E. Snyder, New York, both of N.Y., assignors to Revlon, Inc., New York, N.Y.
Division of Ser. No. 19,444, Mar. 12, 1979. This application Jun. 23, 1981, Ser. No. 276,598
Term of patent 14 years
Int. Cl. D9—*03*
U.S. Cl. D9—345

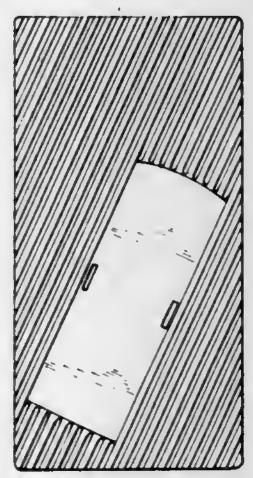

267,858
BOTTLE
Marian Spates, 2969 Lawton Pl., St. Louis, Mo. 63103
Filed Nov. 19, 1980, Ser. No. 208,242
Term of patent 14 years
Int. Cl. D9—*01*
U.S. Cl. D9—373

267,859
RING WITH WATCH
Harumichi Kabaya, Tokyo, Japan, assignor to Citizen Watch Company, Limited, Tokyo, Japan
Filed Dec. 5, 1980, Ser. No. 213,508
Claims priority, application Japan, Jul. 21, 1980, 55-29416
Term of patent 14 years
Int. Cl. D10—*02*; D11—*01*
U.S. Cl. D10—31

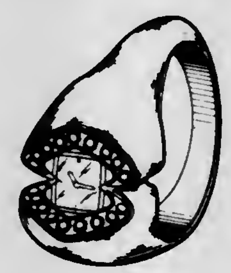

267,860
WRIST WATCH
Harumichi Kabaya, Tokyo, Japan, assignor to Citizen Watch Company Limited, Tokyo, Japan
Filed Dec. 5, 1980, Ser. No. 213,510
Claims priority, application Japan, Jul. 21, 1980, 55-29415
Term of patent 14 years
Int. Cl. D10—*02*
U.S. Cl. D10—32

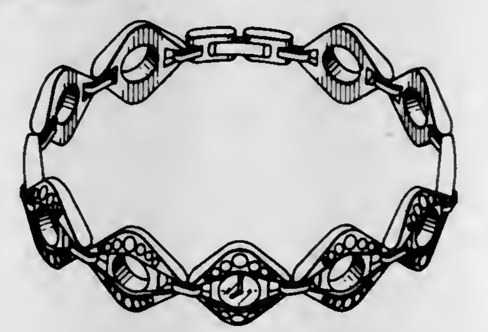

267,861
WRISTWATCH
Eiichi Ohsawa, Tokyo, Japan, assignor to Kabushiki Kaisha Daini Seikosha, Tokyo, Japan
Filed Dec. 12, 1980, Ser. No. 216,017
Claims priority, application Japan, Jun. 20, 1980, 55-24638
Term of patent 14 years
Int. Cl. D10—*02*
U.S. Cl. D10—39

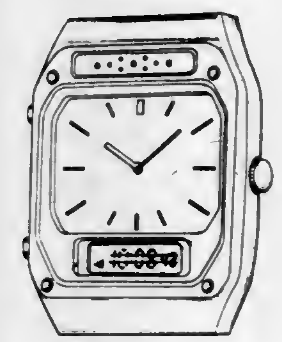

267,862
MOTOR TRICYCLE
Kazutaka Kimura, Kokubunji, and Mituru Yamamoto, Fujimi, both of Japan, assignors to Honda Giken Kogyo Kabushiki Kaisha, Tokyo, Japan
Filed Jul. 27, 1981, Ser. No. 286,837
Claims priority, application Japan, Jan. 26, 1981, 56-2505
Term of patent 14 years
Int. Cl. D12—*11*
U.S. Cl. D12—110

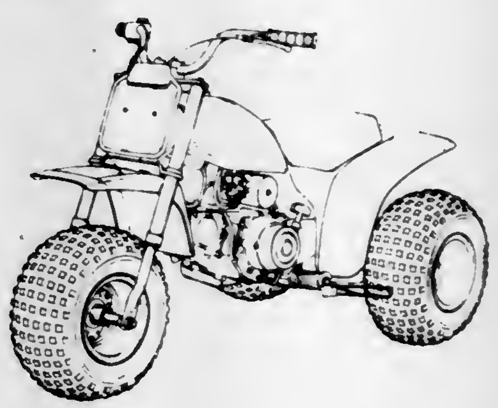

267,863
BABY STROLLER
Shinroku Nakao, Yokohama, and Kouichi Kobayashi, Tokyo, both of Japan, assignors to Combi Co., Ltd., Tokyo, Japan
Filed Apr. 14, 1981, Ser. No. 254,333
Claims priority, application Japan, Nov. 13, 1980, 55-47523
Term of patent 14 years
Int. Cl. D12—*12*
U.S. Cl. D12—129

267,864
MUDGUARD FOR A VEHICLE, OR SIMILAR ARTICLE
Toshiyuki Watanabe, 1-2-21 Motomiya, Tsurumi-Ku, Yokohama, Japan
Filed Jul. 14, 1980, Ser. No. 168,618
Term of patent 14 years
Int. Cl. D12—*16*
U.S. Cl. D12—185

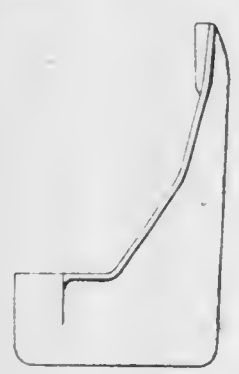

267,865
AUTOMOTIVE SPLASH GUARD
Jules P. Gross, Toronto, Canada, assignor to Pathfinder Auto Lamp Company, Niles, Ill. and National Rubber Company, Ltd., Toronto, Canada
Filed Jan. 26, 1981, Ser. No. 228,151
Term of patent 14 years
Int. Cl. D12—*16*
U.S. Cl. D12—185

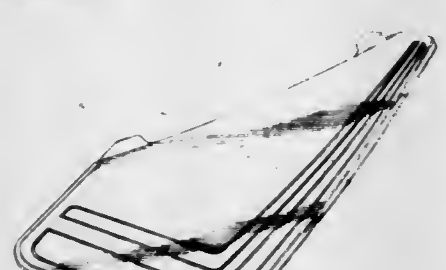

267,866
BOAT
Vaughan V. Parsons, 25640 Via Crotalo, Carmel, Calif. 93921
Filed May 23, 1980, Ser. No. 152,793
Term of patent 14 years
Int. Cl. D12—*06*
U.S. Cl. D12—311

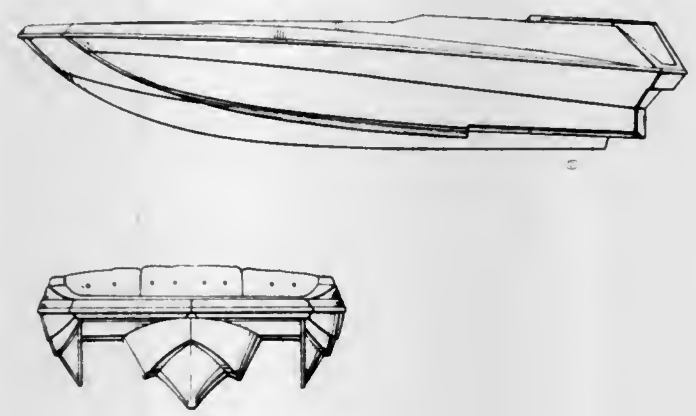

267,867
SAILING RIG
Floyd Marsden, Garden City, Ga., assignor to Barbara B. Marsden, Garden City, Ga.
Filed Feb. 27, 1980, Ser. No. 125,228
Term of patent 14 years
Int. Cl. D12—*06*
U.S. Cl. D12—317

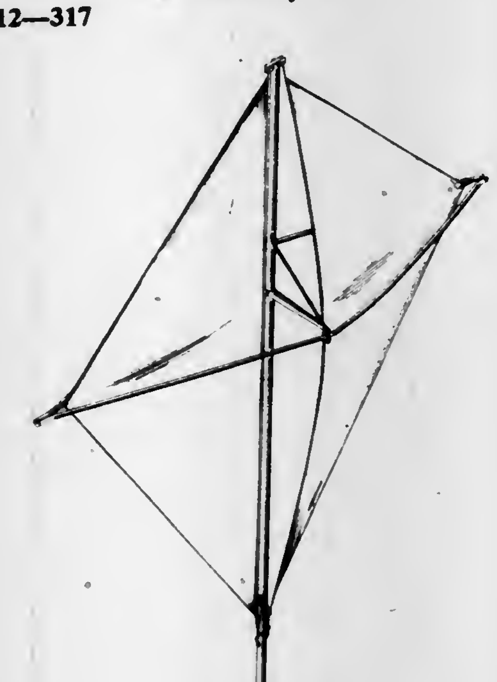

267,868
AGRICULTURAL SPRAY AIRPLANE
Weldon D. Wilson, Ada County, Id., assignor to Eagle Aircraft Company, Boise, Id.
Filed Jul. 2, 1979, Ser. No. 54,142
Term of patent 14 years
Int. Cl. D12—*07*
U.S. Cl. D12—331

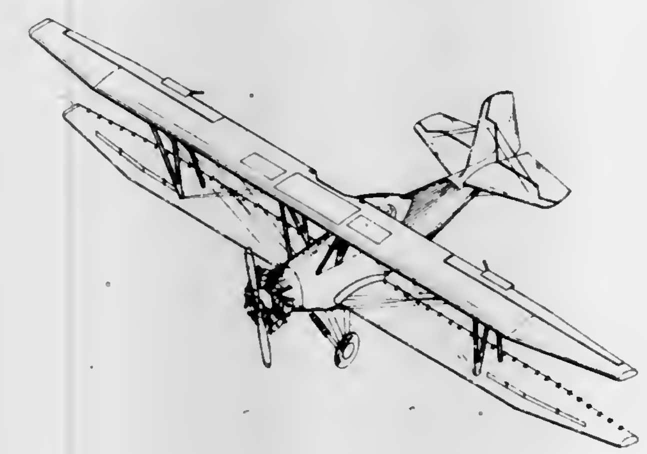

267,869
HOUSING FOR ELECTRIC MOTOR
Henry G. Lenz, and Earl K. Stewart, both of Schenectady, N.Y., assignors to General Electric Co., Schenectady, N.Y.
Filed Jun. 9, 1980, Ser. No. 157,577
Term of patent 14 years
Int. Cl. D13—*01*
U.S. Cl. D13—1

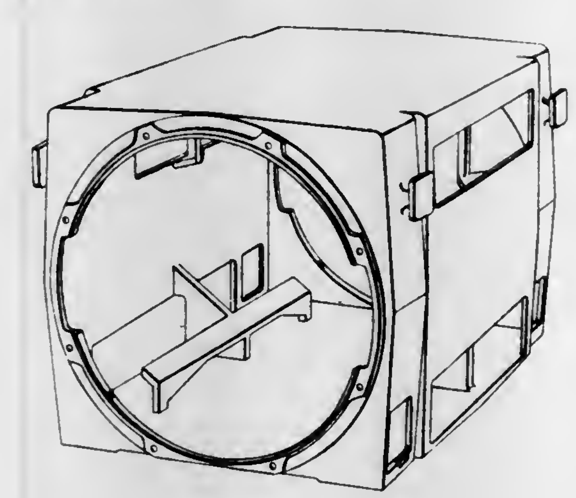

267,870
CONTROL PANEL FOR ELEVATOR SYSTEMS
Ernest M. Bevilaqua, Wilton; Allan L. McCroskery, Weston, both of Conn., and Theodore N. Knerr, New York, N.Y., assignors to Otis Elevator Company, Farmington, Conn.
Filed Feb. 2, 1981, Ser. No. 230,840
Term of patent 14 years
Int. Cl. D10—*06*; D13—*03*
U.S. Cl. D13—35

267,871
FOOT OPERATED LIGHTING CONTROL
James H. Fackert, 9556 Firwood, South Lyon, Mich. 48178
Filed Jan. 5, 1981, Ser. No. 222,909
Term of patent 14 years
Int. Cl. D13—*03*
U.S. Cl. D13—36

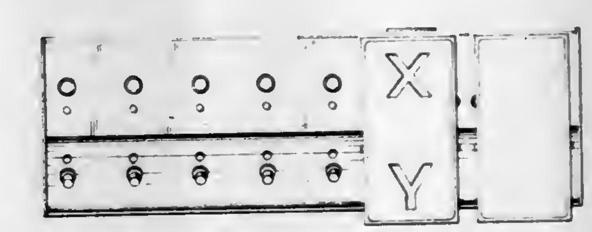

267,872
CAR TELEPHONE SET
Hisao Fukushima, and Junji Hirooka, both of Tokyo, Japan, assignors to Oki Electric Industry Co., Ltd., Tokyo, Japan
Filed Jul. 14, 1980, Ser. No. 168,001
Claims priority, application Japan, Jan. 21, 1980, 55-1065
Term of patent 14 years
Int. Cl. D14—*03*
U.S. Cl. D14—53

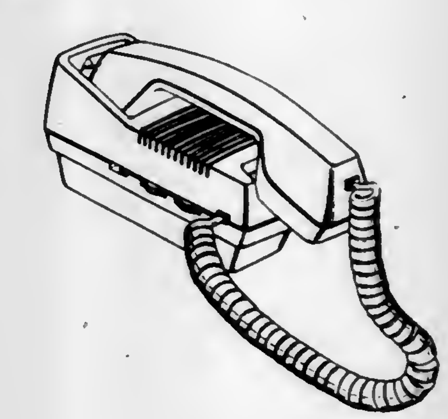

267,873
BASE FOR A TELEPHONE SET
Wilbert C. Brown, Fairfield, and Philip B. Saba, Trumbull, both of Conn., assignors to TIE/Communications, Inc., Shelton, Conn.
Filed Oct. 29, 1979, Ser. No. 88,980
Term of patent 14 years
Int. Cl. D14—*03*
U.S. Cl. D14—60

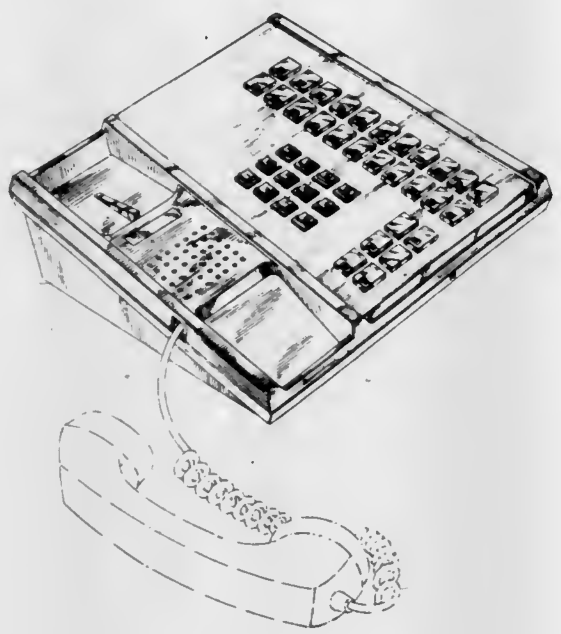

267,874
CLOCK RADIO RECEIVER
Henderikus P. Schouten, Valkenswaard, Netherlands, assignor to U.S. Philips Corporation, New York, N.Y.
Filed Jul. 25, 1980, Ser. No. 172,318
Claims priority, application United Kingdom, Feb. 1, 1980, 993427
Term of patent 14 years
Int. Cl. D14—*03;* D10—*01*
U.S. Cl. D14—73

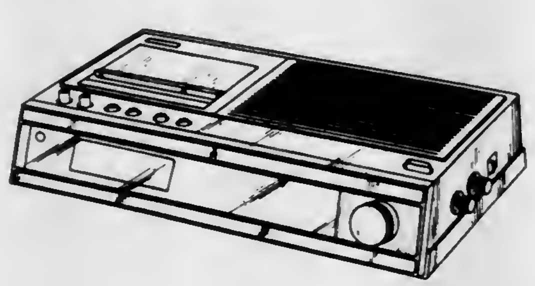

267,875
PROJECTION TELEVISION UNIT
Bernard Mitchell, Upper Saddle River, N.J., and John F. Price, Peabody, Mass., assignors to Kloss Video Corporation, Cambridge, Mass.
Filed Feb. 13, 1981, Ser. No. 234,319
Term of patent 14 years
Int. Cl. D14—*03*
U.S. Cl. D14—79

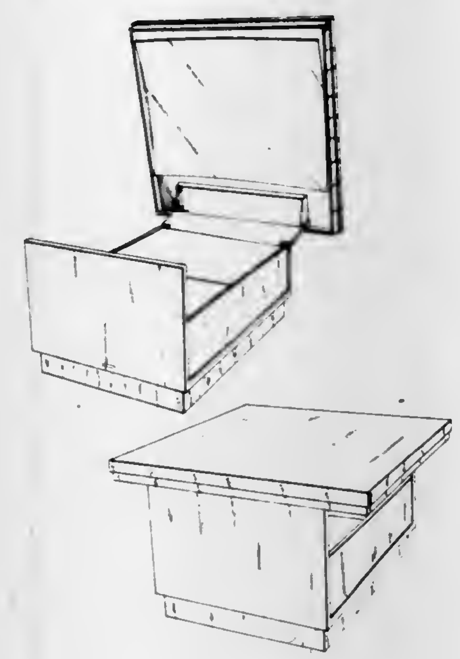

267,876
TELEVISION STATIC ELECTRICITY GROUNDING ROD
John K. Malmin, Carthage, Tex., assignor to Walter Parker, Carthage, Tex., a part interest
Filed Jun. 25, 1980, Ser. No. 162,773
Term of patent 14 years
Int. Cl. D14—*99*
U.S. Cl. D14—90

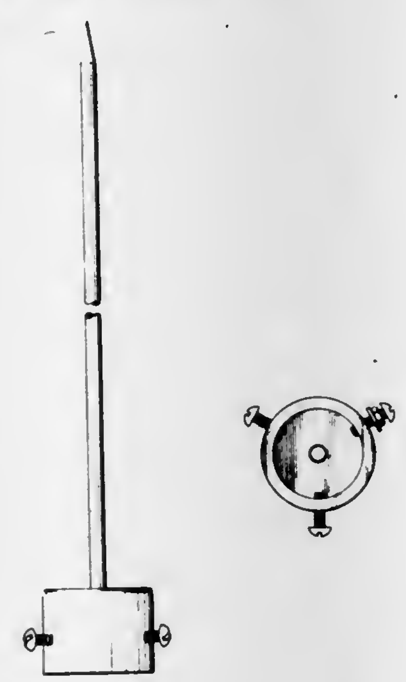

267,877
FACSIMILIE TRANSCEIVER
Jens Reese, Munich, Fed. Rep. of Germany, assignor to Siemens Aktiengesellschaft, Berlin & Munich, Fed. Rep. of Germany
Filed Jun. 11, 1980, Ser. No. 158,626
Term of patent 14 years
Int. Cl. D14—*01*
U.S. Cl. D14—94

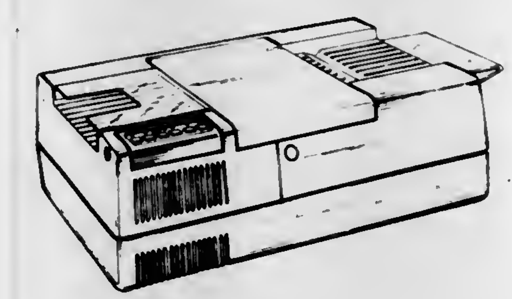

267,878
FACSIMILE TRANSCEIVER
Hideyuki Hosogai, Ueda; Akira Chiku, Komoro, and Toshihiro Kumano, Tobu, all of Japan, assignors to MatsushitaGraphic Communication System, Tokyo, Japan
Filed Jun. 25, 1980, Ser. No. 163,232
Claims priority, application Japan, Dec. 28, 1979, 54-55535
Term of patent 14 years
Int. Cl. D14—*03*
U.S. Cl. D14—94

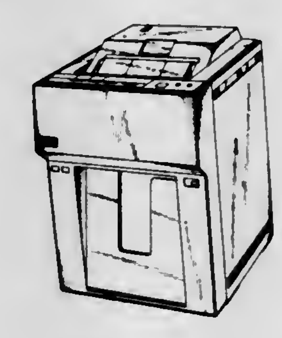

267,879
COMPUTER KEYBOARD OR SIMILAR ARTICLE
Leroy B. Keely, Sunnyvale; Michael J. Nuttall, and William G. Moggridge, both of Palo Alto, all of Calif., assignors to Convergent Technologies, Inc., Santa Clara, Calif.
Filed Oct. 20, 1980, Ser. No. 198,765
Term of patent 14 years
Int. Cl. D14—*02*
U.S. Cl. D14—100

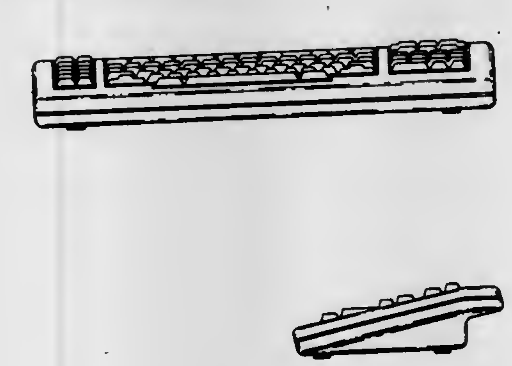

267,880
DISPLAY TERMINAL OR SIMILAR ARTICLE
Eric J. Marshall, 5 Carlton Gardens, London SW1, England
Filed Feb. 25, 1980, Ser. No. 124,648
Claims priority, application United Kingdom, Aug. 28, 1979, 991322
Term of patent 14 years
Int. Cl. D14—*02*
U.S. Cl. D14—113

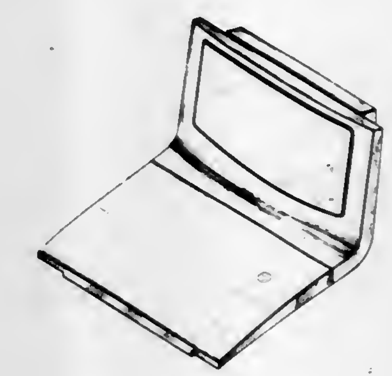

267,881
SEWING MACHINE
Wayne A. Current, Holmdel, N.J., assignor to The Singer Company, Stamford, Conn.
Filed Aug. 11, 1980, Ser. No. 176,828
Term of patent 14 years
Int. Cl. D15—*06*
U.S. Cl. D15—68

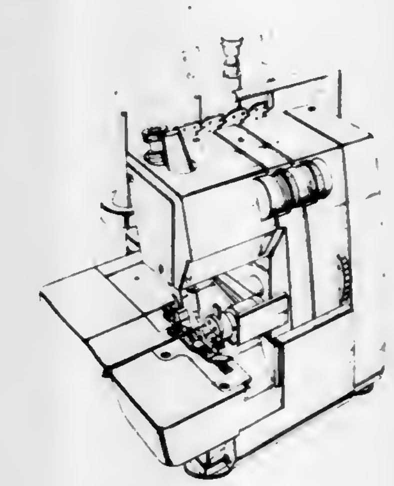

267,882
COMBINED TANKS AND SUPPORTING STRUCTURE FOR WATERBLAST APPARATUS
Frank N. Winter, 23588 Connecticut St., Hayward, Calif. 94545
Filed Aug. 11, 1980, Ser. No. 176,715
Term of patent 14 years
Int. Cl. D15—*09*
U.S. Cl. D15—126

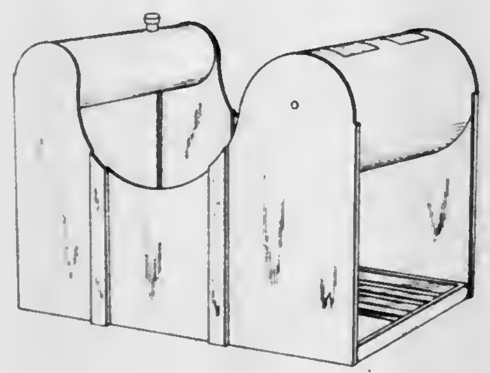

267,883
INDUSTRIAL ROBOT
Kenneth J. Susnjara, Santa Claus, Ind., assignor to Thermwood Corporation, Dale, Ind.
Filed Sep. 12, 1980, Ser. No. 186,638
Term of patent 14 years
Int. Cl. D15—*99*
U.S. Cl. D15—199

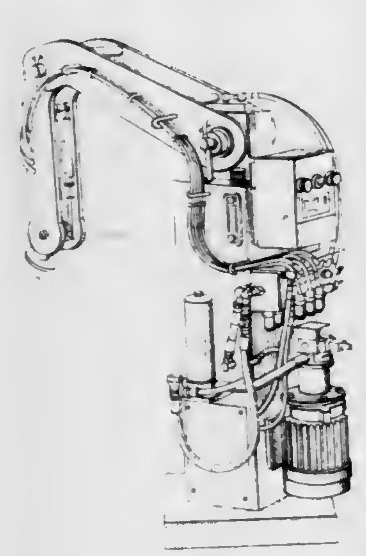

267,884
MIRROR REFLEX CAMERA
Hans-Kurt Uellenberg, Edingen, and Heinrich Janke, Braunfels, both of Fed. Rep. of Germany, assignors to Ernst Leitz Wetzlar GmbH, Wetzlar, Fed. Rep. of Germany
Filed Jun. 3, 1980, Ser. No. 156,171
Term of patent 14 years
Int. Cl. D16—*01*
U.S. Cl. D16—8

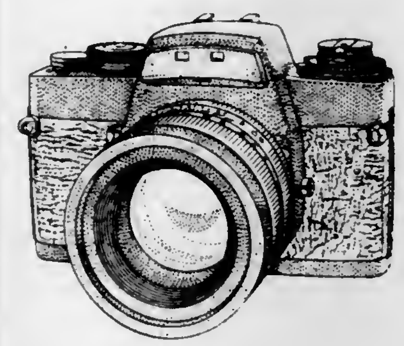

267,885
MUSIC BOX
Chong T. Ahn, 923 Fulton Ave., San Leandro, Calif. 94577
Filed Aug. 13, 1981, Ser. No. 292,707
Term of patent 14 years
Int. Cl. D17—*05*
U.S. Cl. D17—24

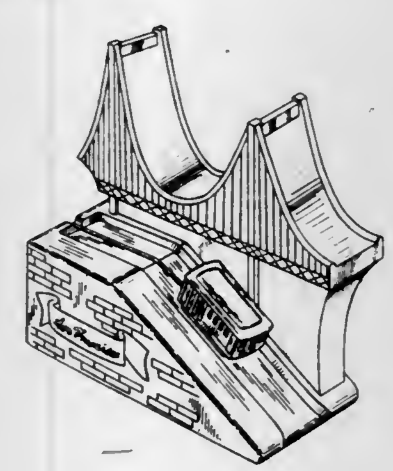

267,886
FIBER TIPPED PEN
Sauro Albertini, 6780 Airolo, Switzerland
Filed Jul. 25, 1980, Ser. No. 172,642
Claims priority, application Switzerland, Jan. 25, 1980, 110936
Term of patent 14 years
Int. Cl. D19—*06*
U.S. Cl. D19—43

267,887
PEN
Herbert Rigoni, Niedereschacher Strasse 153, 7732 Fischbach, Fed. Rep. of Germany
Filed Aug. 28, 1980, Ser. No. 182,320
Claims priority, application Fed. Rep. of Germany, Mar. 4, 1980, MR 1118
Term of patent 14 years
Int. Cl. D19—*06*
U.S. Cl. D19—49

267,888
DECAL OR SIMILAR ARTICLE FOR A VEHICLE BODY
Eunice C. Williams, 1116 Washington, Oak Park, Ill. 60302
Filed Feb. 27, 1981, Ser. No. 237,425
Term of patent 14 years
Int. Cl. D19—*08*; D20—*99*
U.S. Cl. D20—11

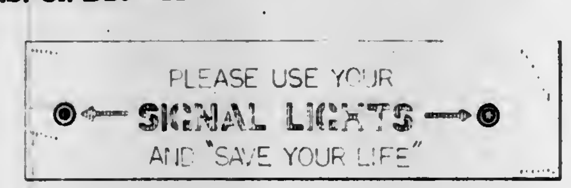

267,889
HANGING SIGN BOARD
Alfred P. Samuels, Jr., 2211 Forister Ct., Norman, Okla. 73069
Filed Dec. 1, 1980, Ser. No. 211,559
Term of patent 14 years
Int. Cl. D20—*03*
U.S. Cl. D20—41

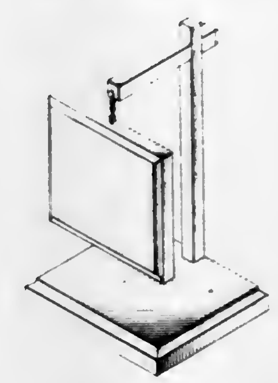

267,890
POST SUPPORTED SIGN BOARD
Alfred P. Samuels, Jr., 2211 Forister Ct. E., Norman, Okla. 73069
Filed Dec. 1, 1980, Ser. No. 211,861
Term of patent 14 years
Int. Cl. D20—*03*
U.S. Cl. D20—41

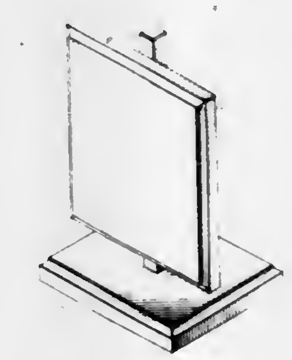

267,891
BASKETBALL SHOOTING TOY
Ellis R. Hailey, 3614 Johnston Way, Louisville, Ky. 40220
Filed Jan. 16, 1980, Ser. No. 112,516
The portion of the term of this patent subsequent to Oct. 30, 1993, has been disclaimed.
Term of patent 14 years
Int. Cl. D21—*01*
U.S. Cl. D21—2

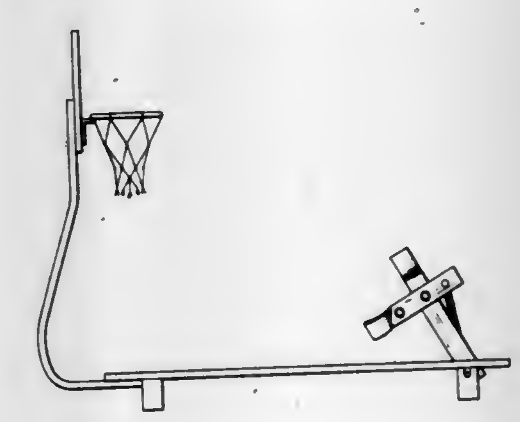

267,892
BOARD FOR PLAYING GAMES
Ulf M. Hanses, Trädgardsgatan 2, S-781 31 Borlänge, and Kerstin M. Hagland, Herrhagsrägen 525, S-791 75 Falun, both of Sweden
Filed Dec. 15, 1980, Ser. No. 216,179
Claims priority, application Sweden, Jun. 13, 1980, 80-1214
Term of patent 14 years
Int. Cl. D21—*01*
U.S. Cl. D21—16

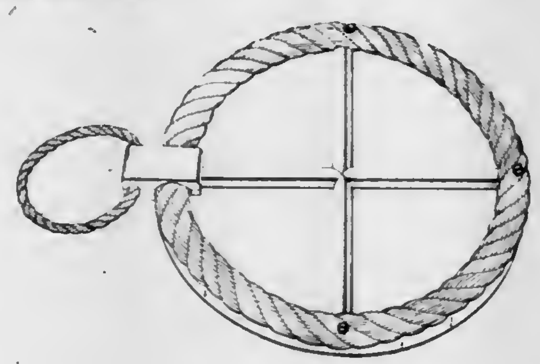

267,893
GAME BOARD
Sharon E. Zeldin, 38506 Calle De La Siesta, Murrieta Hot Springs, Calif. 92362
Filed Dec. 5, 1980, Ser. No. 213,556
Term of patent 14 years
Int. Cl. D21—*01*
U.S. Cl. D21—33

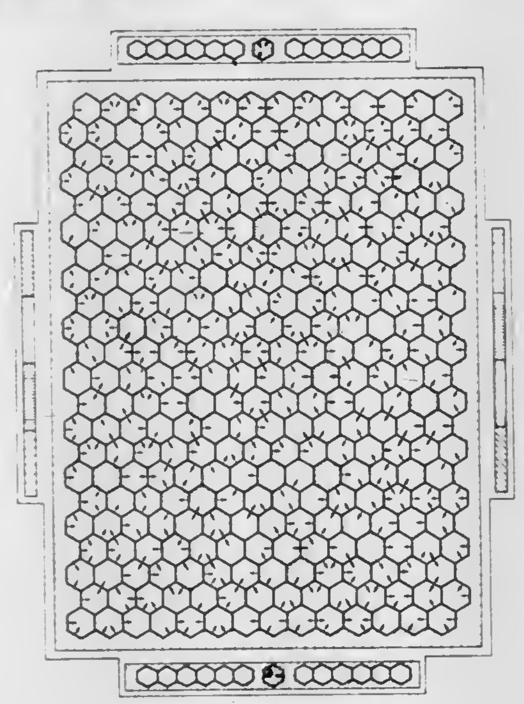

267,894
KINETIC SCULPTURE
Hidetoshi Matsui, 6, Imazunaka 3-chome, Tsurumi-ku, Osaka 538, Japan
Filed Apr. 11, 1979, Ser. No. 29,691
Term of patent 14 years
Int. Cl. D11—*02*
U.S. Cl. D21—102

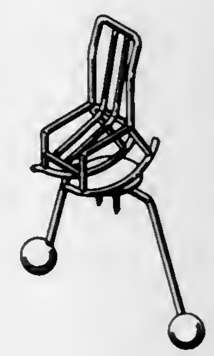

267,895
PUZZLE
Patrick Petrie, 12210 Malone St., Los Angeles, Calif. 90066
Filed Apr. 10, 1980, Ser. No. 138,841
Term of patent 14 years
Int. Cl. D21—*01*
U.S. Cl. D21—105

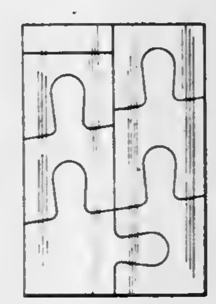

267,896
WHEELED TOY FIGURE
Michael W. Nuttall, South Padadena, Calif., and Yuichi Takahashi, Tokyo, Japan, assignors to Tomy Kogyo Co., Inc., Tokyo, Japan
Filed Apr. 25, 1980, Ser. No. 143,722
Claims priority, application Japan, Oct. 25, 1979, 54-44899
Term of patent 14 years
Int. Cl. D21—*01*
U.S. Cl. D21—161

267,897
FORCED AIR WASTE OIL INCINERATOR
Robert V. Albertson, 2100 Shadywood Rd., Wayzata, Minn. 55391
Filed Oct. 14, 1980, Ser. No. 196,940
Term of patent 14 years
Int. Cl. D23—*03*
U.S. Cl. D23—92

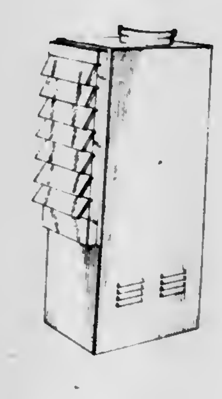

267,898
FACIAL SAUNA
Paul D. Burian, Elmsford, N.Y., and Meyrick K. Rogers, Lancaster, Pa., assignors to Clairol Incorporated, New York, N.Y.
Filed Feb. 19, 1980, Ser. No. 122,634
Term of patent 14 years
Int. Cl. D23—*04*
U.S. Cl. D23—148

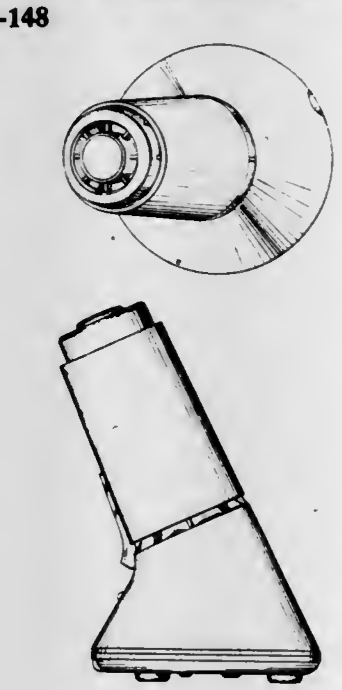

267,899
ELECTRONIC STROBOSCOPIC LIGHT
Henry H. Kolm, Wayland, and Eric A. Kolm, Brookline, both of Mass., assignors to Flik, Inc., Cambridge, Mass.
Filed Jun. 20, 1980, Ser. No. 161,275
Term of patent 14 years
Int. Cl. D10—*06*; D26—*02*
U.S. Cl. D26—40

267,900
LIGHTING FIXTURE
Motoko Ishii, Tokyo, Japan, assignor to Motoko Ishii Lighting Design Incorporated, Tokyo, Japan
Filed Aug. 6, 1979, Ser. No. 64,473
Term of patent 14 years
Int. Cl. D26—*05*
U.S. Cl. D26—83

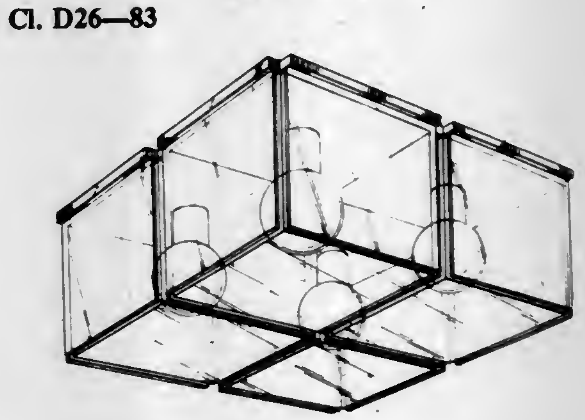

267,901
LIQUID ASHTRAY
Forrest C. Johnstonbaugh, Box 133 AA, R.D., Petersburg, Pa. 16669
Filed Oct. 1, 1980, Ser. No. 192,930
Term of patent 14 years
Int. Cl. D27—*03*
U.S. Cl. D27—08

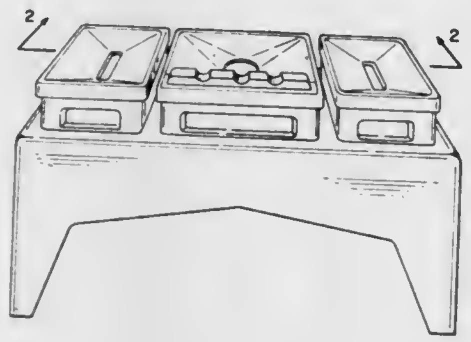

267,902
HAIR STYLING UNIT CONTAINER
Edward H. Meisner, Wyckoff, N.J., and John R. Forsberg, Arlington Heights, Ill., assignors to Helene Curtis Industries, Inc., Chicago, Ill.
Filed Oct. 9, 1980, Ser. No. 195,655
Term of patent 14 years
Int. Cl. D28—*03*
U.S. Cl. D28—11

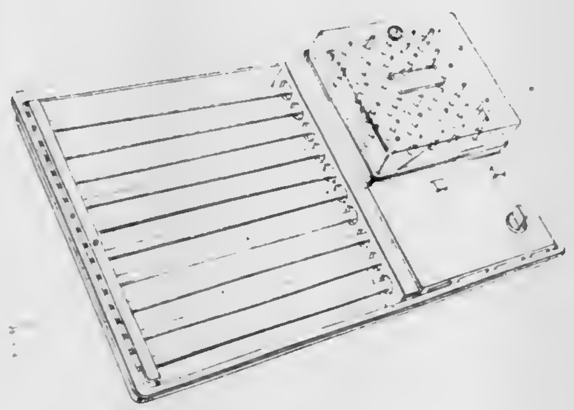

267,903
POCKET CARRYING CASE
Bennett L. Heck, 7920 Courtland, Elmwood Park, Ill. 60635
Continuation of Ser. No. 945,570, Sep. 25, 1978, abandoned. This application Dec. 24, 1980, Ser. No. 220,115
Term of patent 14 years
Int. Cl. D28—*03*
U.S. Cl. D28—79

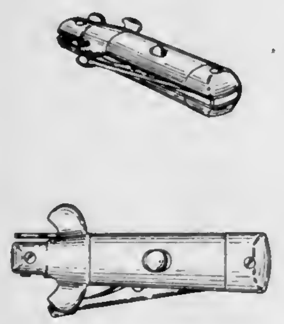

267,904
ANIMAL SHELTER
Lance T. Hampel, Germantown, and Roger R. Sacia, West Bend, both of Wis., assignors to L. T. Hampel Corp., Germantown, Wis.
Filed Nov. 24, 1980, Ser. No. 209,953
Term of patent 14 years
Int. Cl. D30—*02*
U.S. Cl. D30—1

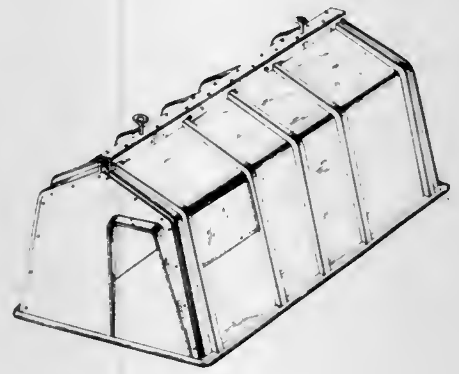

267,905
ANIMAL SHELTER
Alfred H. Keith, Minneapolis, Minn., assignor to Dairy Farm Leasing Company, Minneapolis, Minn.
Filed Mar. 27, 1981, Ser. No. 248,220
Term of patent 14 years
Int. Cl. D30—*02*
U.S. Cl. D30—1

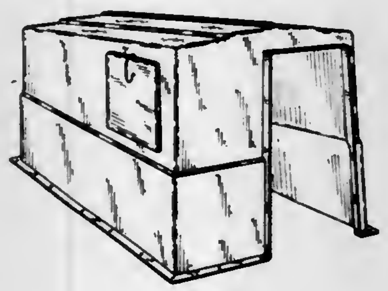

267,906
ELECTRIFIED VACUUM HOSE FOR A WET/DRY VACCUM CLEANER
Carl Parise, and Rainer R. Schulz, both of Reno, Nev., assignors to Parise & Sons, Inc., Sparks, Nev.
Filed Oct. 8, 1980, Ser. No. 195,270
Term of patent 14 years
Int. Cl. D15—*05*
U.S. Cl. D32—31

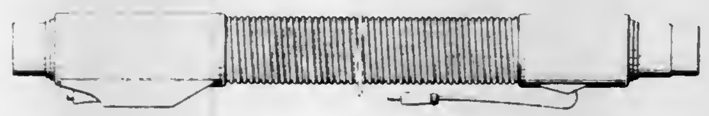

267,907
EMBOSSED PAPER TOWELING
Galyn A. Schulz, Appleton, Wis., assignor to American Can Company, Greenwich, Conn.
Filed Feb. 6, 1981, Ser. No. 232,216
Term of patent 14 years
Int. Cl. D5—*06*
U.S. Cl. D59—2 B

LIST OF PATENTEES

TO WHOM

PATENTS WERE ISSUED ON THE 8TH DAY OF FEBRUARY, 1983

NOTE.—Arranged in accordance with the first significant character or word of the name (in accordance with city and telephone directory practice).

A. Menarini S.A.S.: *See—*
  Pestellini, Vittorio; Ghelardoni, Mario; Giannotti, Danilo; Meli, Alberto; and Maggi, Carlo A., 4,372,958, Cl. 424-253.000.
A. Michael S.A.: *See—*
  Uebelhart, Walter; Gilomen, Beat; and Parel, Claude, 4,372,108, Cl. 57-358.000.
A.P.V. Company Limited, The: *See—*
  Bond, Michael P., 4,372,375, Cl. 165-70.000.
A/S Niro Atomizer: *See—*
  Gude, Klaus E.; Felsvang, Karsten S.; and Coe, Everett L., 4,372,926, Cl. 423-244.000.
AAR Corp.: *See—*
  Naffa, Faisal A., 4,372,715, Cl. 410-79.000.
Aaroe, Kenneth T. Humbucking electromagnetic pickup for stringed musical instruments. 4,372,186, Cl. 84-1.150.
AB Laboratories, a limited partnership: *See—*
  Berg, Arne L., 4,372,187, Cl. 84-1.160.
AB Myometricon: *See—*
  Akerlund, Mats, 4,372,302, Cl. 128-130.000.
Abbott Laboratories: *See—*
  Genese, Joseph N.; and Muetterties, Andrew J., 4,372,306, Cl. 128-214.00G.
Abe, Masaharu: *See—*
  Oizumi, Masayuki; Uekita, Masakazu; Goto, Masana; Azumi, Ichiro; Uozumi, Shoji; Abe, Masaharu; Fushiki, Yasuo; Isshiki, Minoru; and Kawasaki, Kunio, 4,372,800, Cl. 156-307.300.
Abe, Osamu: *See—*
  Ishii, Toshio; Mouri, Yasunori; Abe, Osamu; and Hasegawa, Taiji, 4,373,187, Cl. 364-431.060.
Abolins, Visvaldis; and Luxon, Bruce A., to General Electric Company. Polyphenylene ether compositions. 4,373,052, Cl. 524-451.000.
Aboussafy, John: *See—*
  Kulhanek, Emanuel; and Aboussafy, John, 4,372,379, Cl. 166-68.500.
Abrahamsson, Kjell E.: *See—*
  Samuelson, Hans O.; and Abrahamsson, Kjell E., 4,372,811, Cl. 162-38.000.
ACF Industries, Incorporated: *See—*
  Behle, Gunter R., 4,372,025, Cl. 29-407.000.
Achelpohl, Fritz; and Feldkamper, Richard, to Windmoller & Holscher. Apparatus for deflecting flat workpieces through 180° with simultaneous rotation through 90°. 4,372,436, Cl. 198-377.000.
Ackerman, Allen D.; Perkey, Conrad G.; Martin, Robert A.; and Justusson, William M., to Ford Motor Company. Thin-walled exhaust gas manifold casting. 4,372,112, Cl. 60-323.000.
Ackley, Charles E., Jr.: *See—*
  Ackley, Charles E., Sr.; and Ackley, Charles E., Jr., 4,372,437, Cl. 198-380.000.
Ackley, Charles E., Sr.; and Ackley, Charles E., Jr., to R. W. Hartnett Company. Gauging assembly for capsule orienting and turning apparatus. 4,372,437, Cl. 198-380.000.
Acme Engineering & Manufacturing Corporation: *See—*
  Augsburger, Norman D., 4,372,197, Cl. 98-118.000.
Adamik, Jaroslav F., to MCF Footwear Corporation. Construction of tongue for shoe or the like article. 4,372,060, Cl. 36-54.000.
Adams, Graham L., to Lucas Industries Limited. Fuel pumping apparatus. 4,372,267, Cl. 123-366.000.
Adams, Jerry W., to JEB Energy Industries, Inc. Fuel vaporizer. 4,372,280, Cl. 123-557.000.
Adams, Richard R.; MacConochie, Ian O.; and Poole, Bordie D., Jr., to United States of America, National Aeronautics and Space Administration. Miniature spectrally selective dosimeter. 4,372,680, Cl. 356-51.000.
Adams, Ronald W.: *See—*
  Smith, Gerald J.; and Adams, Ronald W., 4,373,001, Cl. 428-212.000.
Adickes, Henning, to Deere & Company. Tractor. 4,372,577, Cl. 280-780.000.
Admore, Inc.: *See—*
  Hanlon, Albert W., 4,372,086, Cl. 52-36.000.
Advance Metalworking Co., The: *See—*
  Verschage, Richard, 4,372,572, Cl. 280-423.00B.
Advanced Energy Systems, Inc.: *See—*
  Anderson, David H.; and Lucas, Eugene F., 4,372,414, Cl. 180-165.000.
Affolder, Steven L., to CTS Corporation. Process for controlling the movement of press components. 4,372,903, Cl. 264-109.000.
Ahlberg, Lloyd A.: *See—*
  Tittmann, Bernhard R.; Ahlberg, Lloyd A.; and Elsley, Richard K., 4,372,163, Cl. 73-602.000.
Ahn, Byung K., to Koppers Company, Inc. Process for preparing arsenic acid. 4,372,828, Cl. 204-103.000.
Ahn, Min H. Tool. 4,372,362, Cl. 145-63.000.
Air Preheater Company, Inc., The: *See—*
  Baker, Roderick J., 4,372,371, Cl. 165-9.000.
  Stockman, Richard F., 4,372,370, Cl. 165-8.000.
Air Products and Chemicals, Inc.: *See—*
  Ambs, William J., 4,372,931, Cl. 423-329.000.
  Klee, David J.; Lovette, Norris G., Jr.; Ruprecht, David R.; Boyle, John F.; and Mullane, John C., Jr., 4,372,130, Cl. 62-330.000.
  Miller, Gerald D., 4,372,447, Cl. 206-812.000.
  Newton, Charles L.; and Fuini, Dennis L., 4,372,124, Cl. 60-648.000.
  Theobald, Alan, 4,372,764, Cl. 62-13.000.
Aisin Seiki Kabushiki Kaisha: *See—*
  Kobayashi, Hideyuki, 4,372,117, Cl. 60-562.000.
Ajeman, Matthew L.: *See—*
  Dufresne, Raymond A., 4,372,636, Cl. 339-237.000.
Ajzert, Ilona K.: *See—*
  Takacs, Kalman; Papp, Maria H.; Kovacs, Gabor; Ajzert, Ilona K.; Simay, Antal; Nagy, Peter L.; Puskas, Marian E.; Sebestyen, Gyula; Stadler, Istvan; and Sumeghy, Zoltan, 4,373,104, Cl. 546-145.000.
Akerlund, Mats, to AB Myometricon. Instrument for retrieval of retracted threads of intrauterine contraceptive devices. 4,372,302, Cl. 128-130.000.
Akesson, Knut V. Energy saving building and method of making same. 4,372,089, Cl. 52-404.000.
Akesson, Nils B. Method for protective magnetization of vessels. 4,373,174, Cl. 361-149.000.
Akiyama, Yoshinori: *See—*
  Kitakami, Toshiyuki; and Akiyama, Yoshinori, 4,372,613, Cl. 297-481.000.
Aktiebolaget Bofors: *See—*
  Johansson, Lennart, 4,372,019, Cl. 29-1.230.
Aktiengesellschaft Adolph Saurer: *See—*
  Hutter, Wilhelm, 4,372,346, Cl. 139-353.000.
Albany International Corp.: *See—*
  Smith, Gerald J.; and Adams, Ronald W., 4,373,001, Cl. 428-212.000.
Alberta Energy Company Ltd.: *See—*
  Cymbalisty, Lubomyr M.; Maskwa, Alvin J.; Trevoy, Lloyd W.; and Wojno, Jan, 4,372,174, Cl. 73-863.110.
Alco Standard Corporation: *See—*
  Luebke, Clement J.; Mitchell, John A.; and Daniels, Lowell W., 4,372,980, Cl. 426-231.000.
Alcorn, Candace J. Counter dispenser for cones. 4,372,465, Cl. 221-131.000.
Alexy, Fred H., to AMG Industries, Inc. Thermal insulation end panel mounting bracket assembly for paper machine dryer cylinder. 4,372,055, Cl. 34-110.000.
Alfa-Laval AB: *See—*
  Fecske, Aurel J., 4,372,845, Cl. 209-211.000.
Allardt, Clark E.: *See—*
  Hagelberg, Allen C.; Allardt, Clark E.; Lobitz, Walter A.; Thornburg, Robert O.; Zimmerman, George F.; Letterman, Gary L.; and Helbron, John W., 4,372,239, Cl. 114-20.00A.
Allegri, Theodore H., Sr. Magnetically driven pulverizer. 4,372,394, Cl. 169-30.000.
Allen Group Inc.: *See—*
  Marshall, John P.; and Ruffer, Dennis A., 4,373,186, Cl. 364-551.000.
Allen, Richard B., to General Electric Company. Epoxy molding compound. 4,373,040, Cl. 523-466.000.
Allen, Terry S.; and Jacobson, Peter E., to Sperry Corporation. High current transfer roll ring assembly. 4,372,633, Cl. 339-5.00M.
Allied Corporation: *See—*
  Preziosi, Anthony F.; Patel, Gordhanbhai N.; Denkewalter, Robert G.; and Baughman, Ray H., 4,373,032, Cl. 521-38.000.
Allis-Chalmers Corporation: *See—*
  Hess, Paul D., 4,372,784, Cl. 106-100.000.
Allsop, Inc.: *See—*
  Biasini, Americole R., 4,372,518, Cl. 248-441.00R.
Alperstein, Martin: *See—*
  Virk, Kashmir S.; and Alperstein, Martin, 4,372,111, Cl. 60-274.000.
Aluminum Pechiney: *See—*
  Bocourt, Francois; and Fetaud, Henri, 4,372,541, Cl. 266-220.000.
Amano Pharmaceutical Co., Ltd.: *See—*
  Yamada, Hideaki; Tani, Yoshiki; and Isobe, Kimiyasu, 4,373,026, Cl. 435-191.000.
AMBAC Industries, Incorporated: *See—*
  McMillen, Bobby E., 4,372,035, Cl. 29-596.000.
Ambrose, Frank. Sole body for shoes with upwardly deformable arch-supporting segment. 4,372,059, Cl. 36-32.00R.

Ambrus, Gabor; Toth-Sarudy, Eva; Cseh, Gyorgy; Barta, Istvan; and Horvath, Gyula, to Gyogyszerkutato Intezet. 16-Amino-postaglandin derivatives, their acid addition salts, and a process for the preparation thereof. 4,372,973, Cl. 424-305.000.
Ambs, William J., to Air Products and Chemicals, Inc. Microcrystalline synthetic faujasite. 4,372,931, Cl. 423-329.000.
Amchem Products, Inc.: *See*—
Steinbrecher, Lester; and Hall, Wilbur S., 4,373,050, Cl. 524-405.000.
American Can Company: *See*—
Dassler, Karl O.; and Langseder, Neal E., 4,372,462, Cl. 220-269.000.
Herdzina, Frank J.; Kossmann, Hans; and Lemke, Harold C., 4,372,720, Cl. 413-56.000.
American Dental Association Health Foundation: *See*—
Bowen, Rafael L., 4,373,035, Cl. 523-113.000.
American Hoechst Corporation: *See*—
Horner, Ellwood J., 4,372,677, Cl. 355-41.000.
American Home Products Corporation: *See*—
Kendall, Stanley E., 4,372,991, Cl. 427-140.000.
American Hospital Supply Corporation: *See*—
Grossmann, Frederic; and Sims, Larry A., 4,372,303, Cl. 128-132.00D.
Lane, Ernest, 4,372,743, Cl. 8-94.110.
American Optical Corporation: *See*—
Miller, Harold M., 4,372,917, Cl. 422-116.000.
American Sterilizer Company: *See*—
Chamberlain, Robert E.; and Cook, Thomas G., 4,372,916, Cl. 422-111.000.
Ames, Robert K., to Reflux Limited. In situ separation of bitumen from bitumen-bearing deposits. 4,372,383, Cl. 166-266.000.
AMG Industries, Inc.: *See*—
Alexy, Fred H., 4,372,055, Cl. 34-110.000.
Ammonia Casale S.A.: *See*—
Zardi, Umberto, 4,372,920, Cl. 422-148.000.
AMP Incorporated: *See*—
Dola, Frank P., 4,373,155, Cl. 340-623.000.
Lane, David; Woodward, Mervin; and Kilpatrick, Jerry B., 4,372,637, Cl. 339-244.00R.
Ritchie, Leon T.; Snyder, Clair W., Jr.; Toeppen, Thurston H.; and Woratyla, John A., 4,372,634, Cl. 339-17.00C.
Schubert, Paul C.; and Thakrar, Anil C., 4,373,048, Cl. 524-371.000.
Amrhein, Alan G.: *See*—
Krumwiede, John F.; and Amrhein, Alan G., 4,372,770, Cl. 65-27.000.
Andersen, Alan J.: *See*—
Bascom, Hollis H.; Matweyou, Stephen; Andersen, Alan J.; and Greci, John J., 4,372,801, Cl. 156-434.000.
Anderson, David H.; and Lucas, Eugene F., to Advanced Energy Systems, Inc. Fuel-efficient energy storage automotive drive system. 4,372,414, Cl. 180-165.000.
Anderson Engineers, Inc.: *See*—
Anderson, Harry E.; and Heasley, Raymond E., 4,372,020, Cl. 29-81.00H.
Anderson, Harry E.; and Heasley, Raymond E., to Anderson Engineers, Inc. Slag removal apparatus. 4,372,020, Cl. 29-81.00H.
Anderson, Richard A.: *See*—
Matthews, William G.; Sicard, Jean-Paul; and Anderson, Richard A., 4,372,857, Cl. 210-673.000.
Anderson, Robert J.; and Hall, Glenn E., to Andersons, The. Dryer for particulate material. 4,372,053, Cl. 34-11.000.
Anderson, Stephen J., to Merrill Manufacturing Company. Yard hydrant. 4,372,339, Cl. 137-288.000.
Andersons, The: *See*—
Anderson, Robert J.; and Hall, Glenn E., 4,372,053, Cl. 34-11.000.
Ando, Takao: *See*—
Yoshikumi, Chikao; Hirose, Fumio; Ohmura, Yoshio; Fujii, Takayoshi; Ikuzawa, Masanori; Matsunaga, Kenichi; Ando, Takao; and Ohhara, Minoru, 4,372,948, Cl. 424-180.000.
Andrepont, John S., to Chicago Bridge & Iron Company. Apparatus and method for concentrating a liquid mixture by freezing the solvent. 4,372,766, Cl. 62-532.000.
Andresen, Herman J. Liquid cable. 4,372,118, Cl. 60-583.000.
Angelo Guala S.p.A.: *See*—
Guala, Piergiacomo, 4,372,456, Cl. 215-252.000.
Antonius, John I. Therapeutic game. 4,372,560, Cl. 273-408.000.
Apollo Hair Systems, Inc.: *See*—
Nelson, Charles W., 4,372,330, Cl. 132-53.000.
Applied Magnetics-Magnetic Head Division Corporation: *See*—
Martin, Richard T., 4,372,248, Cl. 118-720.000.
Arai, Kazuo: *See*—
Shimamoto, Takeshi; Arai, Kazuo; and Kobayashi, Kazutsugu, 4,372,558, Cl. 273-238.000.
Arai, Tadashi; Takahashi, Katsuhiro; Ishiguro, Kimiko; and Yokoyama, Koji, to Arai, Tadashi. Antibiotic saframycin S and process for producing the same. 4,372,947, Cl. 424-121.000.
Arai, Yoshi: *See*—
Toriyama, Kazuhisa; Nakagomi, Tamihito; Sato, Hisato; Fujita, Yutaka; Morita, Katsuhiko; and Arai, Yoshi, 4,372,871, Cl. 252-299.610.
Aranyos, Nereo. Flexible band clamp. 4,372,011, Cl. 24-20.0TT.
Aristoscot Designs Limited: *See*—
Dunlop, Peter B., 4,373,200, Cl. 369-263.000.
Armijo, Joseph S.; and Coffin, Louis F., Jr., to General Electric Company. Nuclear fuel element. 4,372,817, Cl. 376-417.000.
Arrabit, Pierre. Animal trap. 4,372,074, Cl. 43-69.000.
Arthur Schmid AG: *See*—
Principe, Viktor, 4,372,235, Cl. 112-273.000.
Artos Engineering Company: *See*—
Winkelman, John H., 4,372,041, Cl. 29-747.000.
Asahi Glass Company Ltd.: *See*—
Oda, Yoshio; Otouma, Hiroshi; Uchida, Keiichi; Morikawa, Shinsuke; and Ikemura, Masaaki, 4,372,938, Cl. 423-469.000.
Asahi Kogaku Kogyo Kabushiki Kaisha: *See*—
Oshima, Fumio, 4,372,663, Cl. 354-286.000.
Asai, Mitsuko: *See*—
Higashide, Eiji; Tanida, Seiichi; Muroi, Masayuki; and Asai, Mitsuko, 4,373,028, Cl. 435-253.000.
Asai, Yoshihiko; Hori, Masao; and Tokumitsu, Naoki, to Nippon Steel Corporation. Method of electroslag surfacing of components having a cylindrical surface. 4,373,128, Cl. 219-73.110.
Asami, Takayoshi: *See*—
Tamura, Shoichi; Asami, Takayoshi; and Sonoi, Hidekazu, 4,372,765, Cl. 62-29.000.
Asano, Yoshihiro; Morinaka, Akira; and Murase, Kei, to Nippon Telegraph & Telephone Public Corporation. Laser beam-recording media and method for manufacturing the same. 4,373,004, Cl. 428-328.000.
Aschauer, George R., to Twin Disc, Incorporated. Interleaved friction plate clutch having means to prevent plate wobble. 4,372,434, Cl. 192-85.0AA.
Ascherfeld, Margareta: *See*—
Fabinski, Walter; Deptolla, Udo; and Ascherfeld, Margareta, 4,373,137, Cl. 250-343.000.
Ashland Oil, Inc.: *See*—
Kyung, Jai H.; and Holehouse, Joseph G., 4,372,933, Cl. 423-365.000.
Kyung, Jai H.; and Brusky, Phyllis L., 4,372,934, Cl. 423-365.000.
Aslund, Christer; Eriksson, Hans; and Tornberg, Claes, to Granges Nyby AB. Casings and pressed parts utilized for the extrusion of articles, particularly pipes, and manufacturing process of such casings and pressed parts. 4,373,012, Cl. 428-558.000.
Astra Lakemedel Aktiebolag: *See*—
Helgstrand, Ake J. E.; Johannson, Karl N.; Misiorny, Alfons; Noren, Jan O.; and Stening, Goran, 4,372,894, Cl. 260-941.000.
Astro-Arc Company: *See*—
Kazlauskas, Gasparas, 4,373,125, Cl. 219-60.00A.
Atari, Inc.: *See*—
Lee, Hugh, 4,372,007, Cl. 16-260.000.
Ateliers des Charmilles S.A.: *See*—
Lee, Marlow, 4,372,374, Cl. 165-70.000.
Atkinson, Francis S. Articulated erosion control system. 4,372,705, Cl. 405-19.000.
Atlantic Pipe Corporation: *See*—
Brown, William L.; and Toffolon, Roger L., 4,372,091, Cl. 52-593.000.
Atlantic Richfield Company: *See*—
Chao, Tai S.; Smith, Aubrey C., Jr.; and Smies, Frederic D., 4,372,861, Cl. 252-29.000.
Atlas Copco Aktiebolag: *See*—
Hansson, Gunnar C., 4,372,534, Cl. 254-269.000.
Atwood Vacuum Machine Co.: *See*—
Marx, Thomas O., 4,372,429, Cl. 188-322.120.
Augsburger, Norman D., to Acme Engineering & Manufacturing Corporation. Cold weather inlet for ventilating systems. 4,372,197, Cl. 98-118.000.
Aurich, Horst; Bochmann, Brigitta; Grosse, Klaus; Kohler, Eberhard; Nestler, Michael; Ochsenfarth, Hans-Christian; and Seyfarth, Gerhard, to VEB Kombinat Textima. Device for separating flexible planar material. 4,372,548, Cl. 271-18.300.
Austin, Kenneth L. Thermal-gravity engine. 4,372,123, Cl. 60-639.000.
Automotive Products Limited: *See*—
Farrant, David J. R., 4,372,621, Cl. 308-2.00R.
Avakian, Emik A.; and Avakian, Souren, to Centaur Sciences, Inc. Flow control system and restrictor for use therein. 4,372,304, Cl. 128-214.00E.
Avakian, Souren: *See*—
Avakian, Emik A.; and Avakian, Souren, 4,372,304, Cl. 128-214.00E.
Avery International Corp.: *See*—
Sallenbach, M. Douglas, 4,372,681, Cl. 356-72.000.
Axelson, Simon E.: *See*—
Gillbrand, Per S.; Axelson, Simon E.; and Jiewertz, Sten R., 4,372,119, Cl. 60-600.000.
Azar, Jack C.; Henry, Arnold W.; and Ferguson, Robert M., to Xerox Corporation. Externally heated fusing member for electrostatographic copiers. 4,372,246, Cl. 118-60.000.
Azumi, Ichiro: *See*—
Oizumi, Masayuki; Uekita, Masakazu; Goto, Masana; Azumi, Ichiro; Uozumi, Shoji; Abe, Masaharu; Fushiki, Yasuo; Isshiki, Minoru; and Kawasaki, Kunio, 4,372,800, Cl. 156-307.300.
B.A.T. Cigaretten-Fabriken GmbH: *See*—
Kausch, Erwin; and Todter, Folkhard, 4,372,328, Cl. 131-332.000.
B. F. Goodrich Company, The: *See*—
Olson, Alan J.; and Vielhaber, Robert G., 4,373,093, Cl. 528-491.000.
Babcock, David H., to International Business Machines Corporation. Ribbon drive arrangement for a printer. 4,372,697, Cl. 400-232.000.
Bachinger, Peter. Process and apparatus for preparing fabric patterns. 4,372,499, Cl. 242-50.000.
Backlund, Peter S., to Union Oil Company of California. Sulfur suspensions. 4,372,872, Cl. 252-313.00R.

Bagby, John F., to Spin Physics, Inc. Method of manufacturing a single-track video ferrite record/reproduce head. 4,372,036, Cl. 29-603.000.
Bahder, George, to Cable Technology Laboratories, Inc. Extension of cable life. 4,372,988, Cl. 427-52.000.
Bailey, Curtis R., to Machine Products Corporation. Coil guide member for coil insertion tool. 4,372,039, Cl. 29-734.000.
Bailey, Robert F., to Rockwell International Corporation. Ion implantation for hard bubble suppression. 4,372,985, Cl. 427-38.000.
Baker, Arthur L. Wood burning stove. 4,372,286, Cl. 126-77.000.
Baker CAC, Inc.: *See*—
Goans, Kip B., 4,372,333, Cl. 137-1.000.
Baker Instruments Corp.: *See*—
Parker, Bernard, 4,372,175, Cl. 73-864.170.
Baker International Corporation: *See*—
Baker, John R., 4,372,393, Cl. 166-382.000.
Beimgraben, Herbert W., 4,372,400, Cl. 175-107.000.
Baker, John R., to Baker International Corporation. Casing bore receptacle. 4,372,393, Cl. 166-382.000.
Baker Manufacturing Company: *See*—
Lien, Neil C., 4,372,565, Cl. 277-236.000.
Baker, Roderick J., to Air Preheater Company, Inc., The. Trunnion air seal. 4,372,371, Cl. 165-9.000.
Baker, Wayne. Engine fluid heater. 4,372,260, Cl. 123-142.50E.
Balbuena, Dora O. Combined book, flannelboard and hand puppet. 4,372,077, Cl. 46-116.000.
Balda-Werke Photographische Gerate und Kunststoff GmbH & Co., KG: *See*—
Lange, Karl-Heinz, 4,372,661, Cl. 354-204.000.
Baldanello, Umberto; and Zottino, Giuseppe. Roller blinds. 4,372,367, Cl. 160-310.000.
Balfanz, Fredrick J., to C-R-O, Inc. Metal cutting machine with cut piece pickup and transport magnets. 4,372,538, Cl. 266-69.000.
Balka, William J., Jr. Ball serving apparatus having independently operating horizontal and vertical firing barrel oscillating means. 4,372,283, Cl. 124-56.000.
Ball, David N., to Graviner Limited. Fire and explosion detection. 4,373,136, Cl. 250-339.000.
Balme, Michael J.; and Edwards, David T., to Racal Recorders Ltd. Data encoding and/or decoding. 4,373,154, Cl. 340-347.0DD.
Bandag Incorporated: *See*—
Dugger, Doyle L., 4,372,366, Cl. 157-13.000.
Barber, James C., to James C. Barber and Associates, Inc. Energy conservation and pollution abatement at phosphorus furnaces. 4,372,929, Cl. 423-323.000.
Barmag Barmer Maschinenfabrik AG: *See*—
Oberstrass, Detlev, 4,372,106, Cl. 57-334.000.
Barnes, David I.: *See*—
Robinson, Joseph G.; and Barnes, David I., 4,373,089, Cl. 528-353.000.
Barnes Engineering Company: *See*—
Buckley, Robert E., 4,372,691, Cl. 374-44.000.
Barnett, Lawrence; Cordoba, Julio; and Nuzzo, Benjamin. Vehicular anti-theft locking system. 4,372,419, Cl. 180-289.000.
Barnhouse, Richard A.: *See*—
Le Grand, Alexander J.; and Barnhouse, Richard A., 4,372,444, Cl. 206-505.000.
Barns, Robert L.; Chandross, Edwin A.; Flamm, Daniel L.; Manzione, Louis T.; and Thompson, Larry F., to Bell Telephone Laboratories, Incorporated. Purification process for compounds useful in optical fiber manufacture. 4,372,834, Cl. 204-157.10R.
Barrington, Burchus Q.; Clayton, Wilbur P.; and Jackson, Gerald D., to Halliburton Company. Screw operated emergency relief and safety valve. 4,372,391, Cl. 166-373.000.
Barrington, Burchus Q.; and Clayton, Wilbur P., to Halliburton Company. Full opening emergency relief and safety valve. 4,372,392, Cl. 166-373.000.
Barta, Istvan: *See*—
Ambrus, Gabor; Toth-Sarudy, Eva; Cseh, Gyorgy; Barta, Istvan; and Horvath, Gyula, 4,372,973, Cl. 424-305.000.
Bartholomew, Bruce J., to General Dynamics Corporation/Convair Div. Holographic apparatus to measure the surface figure of a nonlinear axicon and other optical elements. 4,372,684, Cl. 356-348.000.
Bascom, Hollis H.; Matweyou, Stephen; Andersen, Alan J.; and Greci, John J., to Orcon Corporation. Fill strand transfer apparatus for making non woven fabrics. 4,372,801, Cl. 156-434.000.
BASF Aktiengesellschaft: *See*—
Eilingsfeld, Heinz; Hansen, Guenter; Seybold, Guenther; and Zeidler, Georg, 4,372,885, Cl. 260-158.000.
Neumann, Peter; Elser, Wolfgang; Bock, Gustav; and Kermer, Wolf-Dieter, 4,373,102, Cl. 544-143.000.
Rohr, Wolfgang; Schirmer, Ulrich; and Wuerzer, Bruno, 4,373,105, Cl. 560-27.000.
Basic Line, Inc.: *See*—
Licari, Vito; and Licari, Yaffa, 4,372,450, Cl. 211-87.000.
Basile, Rocco F.; Blum, Kenneth P.; and Cole, John M., to Thomas & Betts Corporation. Optical fiber cleaver with puller. 4,372,048, Cl. 30-124.000.
Bassist, Rudolph G. Apparatus for feeding filling threads to a wrap knitting machine. 4,372,132, Cl. 66-84.00A.
Bauer, Gerald L.: *See*—
Brandenburg, Bruce L.; and Bauer, Gerald L., 4,372,940, Cl. 423-567.00A.
Bauer, Heinz, to Societe D'Assistance Technique Pour Produits Nestle S.A. Process for improving the consistency of a reconstituted instant puree. 4,372,984, Cl. 426-637.000.
Baugh, John L.; Montgomery, James W.; and Roach, Malcolm B., to Hughes Tool Company. Well valve. 4,372,390, Cl. 166-373.000.
Baughman, Ray H.: *See*—
Preziosi, Anthony F.; Patel, Gordhanbhai N.; Denkewalter, Robert G.; and Baughman, Ray H., 4,373,032, Cl. 521-38.000.
Baum, Gunter. Device for vacuum sealing of preserving jars. 4,372,096, Cl. 53-88.000.
Baumann, Jack, to Look International Enterprises, Inc. Method of installing a scalp anchor for a hairpiece. 4,372,317, Cl. 128-330.000.
Baxter, Richard V., Jr.: *See*—
Pomerantz, Daniel I.; and Baxter, Richard V., Jr., 4,372,054, Cl. 34-44.000.
Baxter Travenol Laboratories, Inc.: *See*—
Miller, Robert A.; Larson, Kenneth W.; and Schopen, Joseph L., 4,372,100, Cl. 53-428.000.
Bayer Aktiengesellschaft: *See*—
Hildebrand, Dietrich; and Haas, Franz, 4,372,744, Cl. 8-400.000.
Nachtkamp, Klaus; Bock, Manfred; Mennicken, Gerhard; and Pedain, Josef, 4,373,081, Cl. 528-45.000.
Reichmann, Wolfgang; Konig, Klaus; and Schonfelder, Manfred, 4,373,080, Cl. 528-45.000.
BDM Corporation, The: *See*—
Powers, Jerrold V., Jr., 4,372,378, Cl. 166-57.000.
Bearden, Roby; and Stuntz, Gordon F., to Exxon Research and Engineering Co. Process for reducing coke formation in heavy feed catalytic cracking. 4,372,840, Cl. 208-113.000.
Bearden, Roby: *See*—
Stuntz, Gordon F.; and Bearden, Roby, 4,372,841, Cl. 208-113.000.
Beck, Harald. Modular interlocking block construction toy. 4,372,076, Cl. 46-20.000.
Becker, Wilhelm: *See*—
Wojtech, Bernhard; Kiessling, Hans-Joachim; Becker, Wilhelm; and Hermann, Kurt, 4,373,073, Cl. 525-507.000.
Beckman Instruments, Inc.: *See*—
Neti, Radhakrishna M.; and Rocks, Raymond E., 4,372,915, Cl. 422-91.000.
Stephens, Donald E.; and Ehret, Robert J., 4,372,150, Cl. 73-40.50R.
Sternberg, James C., 4,372,683, Cl. 356-338.000.
Wright, Herschel E., 4,372,483, Cl. 494-16.000.
Beecham Group Limited: *See*—
Davies, John S.; and Brooks, Gerald, 4,372,962, Cl. 424-272.000.
Howarth, Thomas T.; and Hunt, Eric, 4,372,946, Cl. 424-114.000.
Beecham Inc.: *See*—
Cimiluca, Paul A., 4,372,942, Cl. 424-16.000.
Beecham-Wulfing GmbH & Co. KG: *See*—
Goring, Joachim E., 4,372,959, Cl. 424-253.000.
Beeman, Archie W. Eccentric rotary bit. 4,372,403, Cl. 175-343.000.
Beese, Miki E. Locking device. 4,372,592, Cl. 292-288.000.
Beesley, Graham E., to Motorola, Inc. Detectors. 4,373,139, Cl. 307-350.000.
Behle, Gunter R., to ACF Industries, Incorporated. Light source to locate nozzle in tank. 4,372,025, Cl. 29-407.000.
Behringwerke Aktiengesellschaft: *See*—
Habenstein, Klaus, 4,372,746, Cl. 436-66.000.
Beimgraben, Herbert W., to Baker International Corporation. Apparatus for applying pressure to fluid seals. 4,372,400, Cl. 175-107.000.
Belisomi, Pietro, to Indesit Industria Elettrodomestici Italiana S.p.A. Circuit arrangement for tuning into one of a number of radioelectric signals. 4,373,208, Cl. 455-186.000.
Bell & Howell Company: *See*—
Pfannkuch, Robert B.; and Grab, Fred W., 4,373,156, Cl. 340-703.000.
Bell, Robert L.: *See*—
Fisher, Alfred J., III; and Bell, Robert L., 4,372,610, Cl. 297-367.000.
Bell Telephone Laboratories, Incorporated: *See*—
Barns, Robert L.; Chandross, Edwin A.; Flamm, Daniel L.; Manzione, Louis T.; and Thompson, Larry F., 4,372,834, Cl. 204-157.10R.
Brooks, Grant P., 4,373,204, Cl. 375-120.000.
Cubbison, Richard James, Jr., 4,373,118, Cl. 179-77.000.
Fulton, Theodore A.; and Hebard, Arthur F., 4,373,138, Cl. 307-277.000.
Gibson, David W.; Hale, Albert L.; Pope, Daniel L.; Rutledge, Donald R.; and Wells, Kirk P., 4,372,535, Cl. 254-319.000.
Hecken, Rudolf P., 4,373,207, Cl. 455-139.000.
Johnson, Leo F.; and Van Uitert, LeGrand G., 4,372,641, Cl. 350-96.120.
Karabinis, Peter D.; and Miedema, Hotze, 4,373,210, Cl. 455-273.000.
Knowles, Susan F., 4,372,511, Cl. 248-68.00R.
Law, Henry H., 4,372,830, Cl. 204-110.000.
Liu, Pao-Lo P.; and Marcatili, Enrique A., 4,372,643, Cl. 350-96.140.
Miller, Stewart E., 4,372,645, Cl. 350-96.300.
Reichmanis, Elsa; Roman, Bernard J.; Tai, King L.; and Wilkins, Cletus W., Jr., 4,373,018, Cl. 430-312.000.
Sartori, Eugene F.; and Uhrhane, Francis J., 4,373,121, Cl. 179-175.30F.
Bellicardi, Francesco; and Vitto, Renato, to Weber S.p.A. Device adapted to correct the air-fuel ratio of the mixture delivered by a carburetor during the periods of operation at low loads of a motor vehicle engine. 4,372,896, Cl. 261-121.00B.

Beloit Corporation: *See—*
Powell, John E.; and Powell, Andrian J. C., 4,372,712, Cl. 406-153.000.
Benaquista, Florence. Treads. 4,372,056, Cl. 36-7.700.
Bender, Reinhold: *See—*
Lisfeld, Robert; and Bender, Reinhold, 4,372,650, Cl. 350-252.000.
Bendix Corporation, The: *See—*
Elpern, David G.; and Casey, Gary L., 4,372,271, Cl. 123-445.000.
Harper, Peter W., 4,372,273, Cl. 123-490.000.
Walter, Richard P.; and Taplin, Lael B., 4,372,272, Cl. 123-467.000.
Benenate, Louis; and Spector, George. Power lawn mower with dumping receptacle. 4,372,064, Cl. 37-117.500.
Benko, Pal; Bozsing, Daniel; Gundel, Janos; and Magyar, Karoly, to Egyt Gyogyszervegyeszeti Gyar. Methyl-quinoxaline-1,4-dioxide derivatives. 4,373,100, Cl. 542-439.000.
Benko, Pal; Bozsing, Daniel; Gundel, Janos; and Magyar, Karoly, to Egyt Gyogyszervegyeszeti Gyar. Quinoxaline-2-yl ethenyl ketones. 4,373,101, Cl. 542-440.000.
Bennett, Benjamin R.; McBee, Leroy D.; and Horak, Richard F., to Moore & Hanks Co. Fail-safe refrigeration for continuous process. 4,372,129, Cl. 62-175.000.
Bennett, James G., Jr.; and Lee, Gim F., Jr., to General Electric Company. Polyphenylene ether compositions. 4,373,064, Cl. 525-68.000.
Benscoter, Richard D.: *See—*
Myers, John L.; Benscoter, Richard D.; Chambers, Bruce B.; and Dyar, Ralph E., 4,373,111, Cl. 174-48.000.
Benson, Clark K.: *See—*
Caridis, Andrew A.; Benson, Clark K.; and Caridis, Anthony A., 4,372,200, Cl. 99-404.000.
Benson, Ronald K. Mailbox marking attachment. 4,372,481, Cl. 232-34.000.
Bentley Laboratories, Inc.: *See—*
Raible, Donald A., 4,372,914, Cl. 422-46.000.
Berdinner, Edward J., Jr., to International Business Machines Corporation. Shock absorbing carriage drive coupling for copier/duplicators. 4,372,671, Cl. 355-8.000.
Berend, Francis T., to Societe Anonyme Parinter. Gloves and a method of making thereof. 4,371,988, Cl. 2-167.000.
Berg, Arne L., to AB Laboratories, a limited partnership. Novel guitar-like electronic musical instrument. 4,372,187, Cl. 84-1.160.
Bergeron, D. L.; Fleming, Daniel J.; and Stephens, Geoffrey B., to International Business Machines Corporation. Schottky Barrier diode with controlled characteristics. 4,373,166, Cl. 357-15.000.
Berman, Herbert L.; and Sprout, James C., to Linear Corporation. Thermal radiation measuring arrangement. 4,372,690, Cl. 374-29.000.
Bernardin, Leo J.: *See—*
Fendler, Eleanor J.; and Bernardin, Leo J., 4,372,312, Cl. 128-290.00R.
Berneman, Armand; David, Alain; Horaud, Florian; and Segard, Emile. Microparticles, preparation thereof and applications thereof in biology, particularly in the culture of human diploid cells. 4,373,027, Cl. 435-240.000.
Bernhardsson, Ake A.; and Svensson, Kent A., to Saab-Scania Aktiebolag. Arrangement for switching a carburetor in internal combustion engines. 4,372,276, Cl. 123-525.000.
Besecke, Siegmund; Fink, Herbert; Sutterlin, Norbert; Markert, Gerhard; Schroder, Gunter; and Tilch, Willi, to Rohm GmbH Chemische Fabrik. Aqueous artificial resin dispersions free of emulsifying agents. 4,373,056, Cl. 524-547.000.
Betush, Frank A., to Progressive Machine Products, Inc. Pinch valve syringe. 4,372,307, Cl. 128-224.000.
Betz Laboratories, Inc.: *See—*
Snyder, William R.; and Feuerstein, Diane, 4,372,870, Cl. 252-180.000.
Bianchi, Valerio: *See—*
Latsch, Reinhard; and Bianchi, Valerio, 4,372,270, Cl. 123-440.000.
Biasini, Americole R., to Allsop, Inc. Music stand extender. 4,372,518, Cl. 248-441.00R.
Bic Corporation: *See—*
Dallaire, Michel J., 4,372,470, Cl. 224-324.000.
BICC Limited: *See—*
Dey, Philip; Gaylard, Bernard; and Taylor, David A., 4,372,792, Cl. 156-48.000.
Bielz, Siegfried; Janisch, Paul; and Lohrberg, Karl, to Metallgesellschaft Aktiengesellschaft. Process of producing chlorine dioxide. 4,372,939, Cl. 423-478.000.
Big Inch Marine Systems, Inc.: *See—*
Miller, Jack E., 4,372,584, Cl. 285-18.000.
Bills, Joseph W., Jr.: *See—*
Fredrickson, Ronald G.; and Bills, Joseph W., Jr., 4,372,727, Cl. 414-537.000.
BIORESEARCH S.r.l.: *See—*
Stramentinoli, Giorgio; and Gennari, Federico, 4,373,097, Cl. 536-26.000.
Bison-Werke Bahre & Greten GmbH & Co. KG: *See—*
Wiemann, Dieter; Seeger, Gunter; and Greten, Berndt, 4,372,899, Cl. 264-25.000.
Black, John W.; and Slager, Ralph E., to Pemco-Kalamazoo, Inc. Collet lock for a mold assembly. 4,372,738, Cl. 425-451.900.
Black, Philip W., to International Standard Electric Corporation. Optical fibres. 4,372,648, Cl. 350-96.330.
Blake, Joseph W., III; and Kaufman, Jack W. Surgical device. 4,372,316, Cl. 128-325.000.
Block Drug Company, Inc.: *See—*
Chang, Tiang-Shing; Zientek, Lucy J.; Viningauz, Arthur; and Scheps, Marcy L., 4,373,036, Cl. 523-120.000.
Lover, Myron J.; Singer, Arnold J.; Lynch, Donald M.; and Rhodes, William E., III, 4,372,977, Cl. 424-342.000.
Blout, Bennett O., to Evans Products Company. Freight bracing bulkhead trolley and latching system. 4,372,716, Cl. 410-134.000.
Blum, Kenneth P.: *See—*
Basile, Rocco F.; Blum, Kenneth P.; and Cole, John M., 4,372,048, Cl. 30-124.000.
Blumenshine, Richard A., to Lely Independence Mfg., Inc. Sprayer boom structure. 4,372,492, Cl. 239-168.000.
Blythe, Robert J.: *See—*
Bond, Robert; and Blythe, Robert J., 4,373,069, Cl. 525-237.000.
Bo, Ermano; and Mathia, Tadeusz G. Method and apparatus for treating eutectic and eutectoid compositions. 4,372,781, Cl. 75-65.0ZM.
Boberg, Nils G. E.: *See—*
Larsson, Lars-Ake L.; Gullberg, Claes-Ake; Stenberg, Kaj; and Boberg, Nils G. E., 4,372,484, Cl. 494-14.000.
Bobst, Robert W.; Garner, Billy J.; and Jacob, Frederick W., to Union Carbide Corporation. Degassing process for removing unpolymerized monomers from olefin polymers. 4,372,758, Cl. 55-48.000.
Bochmann, Brigitta: *See—*
Aurich, Horst; Bochmann, Brigitta; Grosse, Klaus; Kohler, Eberhard; Nestler, Michael; Ochsenfarth, Hans-Christian; and Seyfarth, Gerhard, 4,372,548, Cl. 271-18.300.
Bock, Gustav: *See—*
Neumann, Peter; Elser, Wolfgang; Bock, Gustav; and Kermer, Wolf-Dieter, 4,373,102, Cl. 544-143.000.
Bock, Manfred: *See—*
Nachtkamp, Klaus; Bock, Manfred; Mennicken, Gerhard; and Pedain, Josef, 4,373,081, Cl. 528-45.000.
Bocourt, Francois; and Fetaud, Henri, to Aluminum Pechiney. Apparatus for treating a bath of liquid metal by injecting gas. 4,372,541, Cl. 266-220.000.
Boeder, Charles W., to Minnesota Mining and Manufacturing Company. Anaerobically curing compositions. 4,373,077, Cl. 526-309.000.
Boeing Company, The: *See—*
Burkam, John E., 4,373,169, Cl. 358-104.000.
Desjardins, Rene A., 4,372,431, Cl. 188-380.000.
Lambregts, Antonius A., 4,373,184, Cl. 364-434.000.
Pinson, George T.; and Hunter, Alex B., 4,372,216, Cl. 102-489.000.
Rhoton, William A., 4,372,015, Cl. 24-221.00R.
Ringis, Gerald A., 4,372,440, Cl. 198-728.000.
Syberg, Jan, 4,372,505, Cl. 244-53.00B.
Bohan, John E., Jr., to Honeywell Inc. Fail safe digital timer. 4,373,201, Cl. 371-68.000.
Bohman, Nils-Erik, to Forsheda Gummifabrik AB. Method of forming a pipe socket. 4,372,905, Cl. 264-249.000.
Bohr, Mark T., to Intel Corporation. Process for forming contact openings through oxide layers. 4,372,034, Cl. 29-577.00C.
Boisset, Bernard, to Societe Industrielle Bertrand Faure. Vehicle seats comprising a shell-shaped frame. 4,372,609, Cl. 297-362.000.
Bollinger, Parker A., Jr., to Siemens-Allis, Inc. Gear motor torque reaction absorber. 4,372,180, Cl. 74-606.00R.
Bolze, Manfred; and Drawert, Manfred, to Schering Aktiengesellschaft. Polyesteramide adhesives. 4,373,085, Cl. 528-291.000.
Bomback, John L., to Ford Motor Company. Method of determining vehicle misfueling. 4,372,748, Cl. 436-73.000.
Bonazoli, Robert P.; and Paget, Fredrick W., to GTE Products Corporation. Method and circuit for operating discharge lamp. 4,373,146, Cl. 315-209.00R.
Bond, Michael P., to A.P.V. Company Limited, The. Heat exchanger. 4,372,375, Cl. 165-70.000.
Bond, Robert; and Blythe, Robert J., to Dunlop Limited. Elastomer compositions. 4,373,069, Cl. 525-237.000.
Boon, John R.: *See—*
de Buda, Eric G.; Boon, John R.; and Dolbey, Michael P., 4,372,161, Cl. 73-432.00R.
Boorman, Roy S.: *See—*
Salter, Robert S.; Boorman, Roy S.; and Gilders, Ross D., 4,372,782, Cl. 75-118.00R.
Boretsky, Boris M.: *See—*
Sokolov, Sergei S.; Komovsky, Vadim R.; Vlasov, Leonid I.; Boretsky, Boris M.; and Shiryaev, Grigory V., 4,372,121, Cl. 60-606.000.
Borugian, Dennis A., to Eaton Corporation. Drum brake and retaining spring. 4,372,430, Cl. 188-329.000.
Boschetti, Giovanni. Process for simple, rapid and economical transformation of a window with a wooden or metal frame or a single pane frame into a window with a plurality of insulating panes. 4,372,094, Cl. 52-741.000.
Botton, Roger; and Cosserat, Dominique, to Rhone-Poulenc Industries. NO_x Removal from NO_x/O_2 gaseous feedstreams. 4,372,935, Cl. 423-393.000.
Bourlier, Claude: *See—*
Tissot, Alain; and Bourlier, Claude, 4,372,225, Cl. 109-19.000.
Bovio, Michele; and Demonte, Filippo, to Ing. C. Olivetti & Co., S.p.A. Electronic pocket calculator. 4,372,694, Cl. 400-88.000.
Bowen, Rafael L., to American Dental Association Health Foundation. Isotonic monomer formulations. 4,373,035, Cl. 523-113.000.
Bower, Arnold B., Jr.; and Dillon, Robert E., to General Electric Company. Resin capsule and method for grouting anchor elements in holes of various lengths. 4,372,708, Cl. 405-261.000.
Boyle, John F.: *See—*
Klee, David J.; Lovette, Norris G., Jr.; Ruprecht, David R.; Boyle, John F.; and Mullane, John C., Jr., 4,372,130, Cl. 62-330.000.

Bozsing, Daniel: *See—*
Benko, Pal; Bozsing, Daniel; Gundel, Janos; and Magyar, Karoly, 4,373,100, Cl. 542-439.000.
Benko, Pal; Bozsing, Daniel; Gundel, Janos; and Magyar, Karoly, 4,373,101, Cl. 542-440.000.
Bradbury, Bernard G., to Rexnord Inc. Positively driven steering member for conveying apparatus. 4,372,435, Cl. 198-356.000.
Bradley, Irving; and Vodicka, Vincent, to General Electric Company. Plastic PAR lamp construction. 4,372,794, Cl. 156-73.100.
Brandell, John T., to Halliburton Company. Downhole tool with ratchet. 4,372,387, Cl. 166-334.000.
Brandenburg, Bruce L.; and Bauer, Gerald L., to Sterling Drug Inc. Process and apparatus for treatment of thiosulfate containing liquors. 4,372,940, Cl. 423-567.00A.
Brandt Industries, Inc.: *See—*
Brandt, Robert O., Jr., 4,372,171, Cl. 73-861.660.
Brandt, Robert O., Jr., to Brandt Industries, Inc. Nozzle pitot averaging primary. 4,372,171, Cl. 73-861.660.
Brandt, Siegfried: *See—*
Disteldorf, Josef; Hubel, Werner; Brandt, Siegfried; and Haage, Hans-Jurgen, 4,373,088, Cl. 528-338.000.
Branscum, Tony E., to Gott Corporation. Container holder. 4,372,453, Cl. 215-13.00R.
Brasa, Umberto. Doctor-blade support means for silk screen printing machine. 4,372,203, Cl. 101-124.000.
Brasfield, Bernard M., to Surgikos, Inc. Latex glove. 4,371,987, Cl. 2-162.000.
Braun, Gert, to Halbach & Braun. Chain having longitudinal stiffness used with hauling and cutting equipment. 4,372,619, Cl. 299-43.000.
Breazeale, Benjamin T., II: *See—*
Miller, John P. K., IV; and Breazeale, Benjamin T., II, 4,372,018, Cl. 27-35.000.
Breitenfellner, Franz: *See—*
Buxbaum, Lothar; and Breitenfellner, Franz, 4,373,044, Cl. 524-132.000.
Bresson, Clarence R.; and Parlman, Robert M., to Phillips Petroleum Company. Aromatic and benzothiophene extender oil composition for ore floatation. 4,372,844, Cl. 209-166.000.
Briggs & Stratton Corporation: *See—*
Mitchell, Robert K.; and Catterson, Robert K., 4,372,433, Cl. 192-18.00R.
British Petroleum Company Limited, The: *See—*
Ehlers, Joern; and Haukelt, Helmut, 4,372,866, Cl. 252-70.000.
Brochman, Wilfred R.; Hannula, Rodney R.; and Jorgensen, Bradley H., to Minnesota Mining and Manufacturing Company. Oil-resistant closure system. 4,372,460, Cl. 220-258.000.
Brooks, Gerald: *See—*
Davies, John S.; and Brooks, Gerald, 4,372,962, Cl. 424-272.000.
Brooks, Grant P., to Bell Telephone Laboratories, Incorporated. Phase locked loop timing recovery circuit. 4,373,204, Cl. 375-120.000.
Brown, Alphonso W., Jr. Compress roller curler. 4,372,329, Cl. 132-40.000.
Brown, Alton F.: *See—*
Marton, Renata; and Brown, Alton F., 4,372,495, Cl. 241-28.000.
Brown, Christopher R.; and Olsen, Everett O., to Foxboro Company, The. Industrial process control instrument employing a resonant sensor. 4,372,164, Cl. 73-704.000.
Brown, Gordon E. Phenol-resorcinol-formaldehyde resin. 4,373,062, Cl. 524-841.000.
Brown, Leo F.; and Myerly, R. S., to Wear-Ever Aluminum, Inc. Rotary skewer cooker. 4,372,199, Cl. 99-341.000.
Brown, Marvin R.; Rivier, Jean E. F.; and Vale, Wylie W., Jr., to Salk Institute For Biological Studies, The. Pharmaceutically active peptides. 4,372,884, Cl. 260-112.50S.
Brown, Mitchell P.: *See—*
Cane, Albert; and Brown, Mitchell P., 4,372,741, Cl. 425-556.000.
Brown, William L.; and Toffolon, Roger L., to Atlantic Pipe Corporation; and Toffolon, Roger L. Precast concrete structural unit and composite wall structure. 4,372,091, Cl. 52-593.000.
Browning Engineering Corporation: *See—*
Browning, James A., 4,372,732, Cl. 416-14.000.
Browning, James A., to Browning Engineering Corporation. Control mechanism for a windmill. 4,372,732, Cl. 416-14.000.
Bruns, Klaus: *See—*
Upadek, Horst; and Bruns, Klaus, 4,372,880, Cl. 252-522.00R.
Brunsch, Klaus; Herkert, Claus-Michael; and Thomamueller, Dieter, to Messerschmitt-Boelkow-Blohm Gesellschaft mit beschraenkter Haftung. Method for the manufacture of a coupling or clutch element. 4,372,795, Cl. 156-155.000.
Brunson, Welton K.: *See—*
Hubbard, Vance M.; and Brunson, Welton K., 4,372,301, Cl. 128-94.000.
Brusky, Phyllis L.: *See—*
Kyung, Jai H.; and Brusky, Phyllis L., 4,372,934, Cl. 423-365.000.
Bruzzese, Tiberio; and Ferrari, Lorenzo. Derivatives of rifamycins, their preparation and pharmaceutical compositions thereof. 4,372,961, Cl. 424-267.000.
Bryhn, Odd R.: *See—*
Reed, Marion G.; Loken, Tor; and Bryhn, Odd R., 4,372,786, Cl. 106-900.000.
Bubelis, Juozas: *See—*
Landa, Vaclav; Vitek, Jaromir; Nejedly, Pavel; Holpuch, Vladimir; Bubelis, Juozas; and Stepanovicius, Atanas-Nemezyus, 4,372,826, Cl. 204-43.00T.
Bucher, Bernard P.: *See—*
Langlois, Michel; Lacour, Alain P.; Bucher, Bernard P.; and Mocquet, Gisele C., 4,372,967, Cl. 424-279.000.
Buckley, Robert E., to Barnes Engineering Company. Method and apparatus for determining the thermal resistance of a structure such as a wall ceiling or the like. 4,372,691, Cl. 374-44.000.
Budd Company, The: *See—*
Mekosh, George, Jr., 4,372,620, Cl. 303-99.000.
Skypala, Louis M., 4,372,510, Cl. 248-58.000.
Buffalo Color Corporation: *See—*
Marton, Renata; and Brown, Alton F., 4,372,495, Cl. 241-28.000.
Bunger, Heinrich; Cordes, Rudolf; and Hoffmann, Gerhart, to Dynamit Nobel Aktiengesellschaft. Method for obtaining and reusing of oxidation catalyst in the Witten DMT process. 4,372,875, Cl. 252-413.000.
Burger, Jurgen: *See—*
Kasparek, Alois; and Burger, Jurgen, 4,372,710, Cl. 406-28.000.
Burger King Corporation: *See—*
Moore, Albert R., 4,372,354, Cl. 141-361.000.
Burkam, John E., to Boeing Company, The. Multi-window visual display system for flight simulators. 4,373,169, Cl. 358-104.000.
Burke, Robert L.: *See—*
Guditz, Elis A.; and Burke, Robert L., 4,372,996, Cl. 427-328.000.
Burnham, Francis L., to Orangeburg Technologies, Inc. Generating system utilizing multiple-stage small temperature differential heat-powered pumps. 4,372,114, Cl. 60-325.000.
Burns, Bruce P.: *See—*
Kirkendall, Richard D.; Drysdale, William H.; Kokinakis, Louise D.; and Burns, Bruce P., 4,372,217, Cl. 102-521.000.
Burroughs Corporation: *See—*
Holz, George E.; and Tezucar, Okan K., 4,373,157, Cl. 340-805.000.
Burroughs Wellcome Co.: *See—*
Duch, David S.; Nichol, Charles A.; and Sigel, Carl W., 4,372,957, Cl. 424-251.000.
Buschbom, Floyd E.; Henke, Donald L.; and Hansen, Glen D., to Veda, Inc. Tilt control. 4,372,729, Cl. 414-700.000.
Bush, John R., to Research-Cottrell, Incorporated. Pollution control by spray dryer and electron beam treatment. 4,372,832, Cl. 204-157.10R.
Butler, Donald E., to Warner-Lambert Company. Use of dihydro-1H-pyrrolizine-3,5(2H,6H)-dione as a cognition activator. 4,372,966, Cl. 424-274.000.
Butler, James W.; Colvin, Alex D.; and Schuetzle, Dennis, to Ford Motor Company. Methods of monitoring a combustion system. 4,372,155, Cl. 73-114.000.
Butler Manufacturing Company: *See—*
Myers, John L.; Benscoter, Richard D.; Chambers, Bruce B.; and Dyar, Ralph E., 4,373,111, Cl. 174-48.000.
Buxbaum, Lothar; and Breitenfellner, Franz, to Ciba-Geigy Corporation. Flame-proofed plastics moulding compounds. 4,373,044, Cl. 524-132.000.
Byrum, Lyle M.: *See—*
Cronk, David; and Byrum, Lyle M., 4,372,506, Cl. 244-100.00R.
Bystedt, Hjalmar S. I., to Sunds Defibrator AB. Method and device for manufacturing mechanical pulp. 4,372,810, Cl. 162-23.000.
C-R-O, Inc.: *See—*
Balfanz, Fredrick J., 4,372,538, Cl. 266-69.000.
Cable Technology Laboratories, Inc.: *See—*
Bahder, George, 4,372,988, Cl. 427-52.000.
Caccioli, Anthony: *See—*
LaViolette, Paul A.; Caccioli, Anthony; Garcia, Alexander; Hotchkiss, Earl H.; and Marchitto, Alfred J., Jr., 4,372,016, Cl. 24-241.0PS.
Cachera, Pierre C., to Electricite de France (Service National). Method for flattening the curve of evolution of heat in a fast reactor core. 4,372,911, Cl. 376-349.000.
Calabrese, Richard A., to Pitney Bowes Inc. Cold pressure fusing apparatus. 4,372,247, Cl. 118-116.000.
Callahan, Ronald J.: *See—*
Strauss, Harry W.; Callahan, Ronald J.; and Froelich, Jerry W., 4,372,294, Cl. 128-1.100.
Callaway, Milton A., to Simmons U.S.A. Corporation. Hybrid flotation mattress having protecting, water proof liner. 4,371,998, Cl. 5-451.000.
Calnan, Thomas P. Support coupling for outdoor electrical junction box. 4,372,513, Cl. 248-146.000.
Cameron, Russell J., to Ross Operating Valve Company. Emergency brake for presses. 4,372,202, Cl. 100-53.000.
Camp, Douglas M.: *See—*
Stratta, Peter J.; Stratta, John G.; and Camp, Douglas M., 4,372,006, Cl. 16-105.000.
Campbell, James H., to Spare Trunk Corporation. Luggage and accessory trailer. 4,372,568, Cl. 280-63.000.
Canada-Cities Service, Ltd.: *See—*
Cymbalisty, Lubomyr M.; Maskwa, Alvin J.; Trevoy, Lloyd W.; and Wojno, Jan, 4,372,174, Cl. 73-863.110.
Cane, Albert; and Brown, Mitchell P., to Discovision Associates. Hot sprue valve assembly for an injection molding machine. 4,372,741, Cl. 425-556.000.
Canon Kabushiki Kaisha: *See—*
Matsumura, Isao; Ishikawa, Yasuyuki; Maruyama, Shigeo; Hirano, Reiji; and Kohayakawa, Yoshimi, 4,372,655, Cl. 351-206.000.
Shimizu, Masami, 4,372,664, Cl. 354-288.000.
Tomosada, Masahiro; Kimura, Yoshimasa; and Sakamaki, Hisashi, 4,372,673, Cl. 355-14.00R.
Carbonisation Entreprise et Ceramique (C.E.C.): *See—*
Naturel, Christian; and Minot, Etienne, 4,372,494, Cl. 239-553.300.

Caridis, Andrew A.; Benson, Clark K.; and Caridis, Anthony A., to Heat and Control, Inc. Direct fired fryer with wiper means. 4,372,200, Cl. 99-404.000.
Caridis, Anthony A.: *See—*
  Caridis, Andrew A.; Benson, Clark K.; and Caridis, Anthony A., 4,372,200, Cl. 99-404.000.
Carl Freudenberg, Firma: *See—*
  Knoke, Jurgen; Jost, Manfred; Fahrbach, Erich; and Tecl, Bohuslav, 4,373,000, Cl. 428-198.000.
Carlmark, Rolf. Hang stand for unloading of backbone discs. 4,372,552, Cl. 272-112.000.
Carlson, Franklin J. Protective skirt assembly for a container. 4,372,458, Cl. 220-71.000.
Carlson, Linda A.: *See—*
  Morgan, Steven R.; and Carlson, Linda A., 4,372,561, Cl. 273-411.000.
Carlson, William L., Jr., to General Signal Corporation. Torque compensated electric motor. 4,373,147, Cl. 318-48.000.
Carpenter, Vance J.; and Smith, Abbott, to Xerox Corporation. Precession scanning system. 4,372,670, Cl. 355-8.000.
Carruth, H. T., Jr., to Chevron Research Company. Updating and alerting method and apparatus associated with a microcomputer system for automatically indicating and recording parameters that spatially define locations of seismic exploration spread and source arrays. 4,373,198, Cl. 367-37.000.
Carter, Ernest E., Jr., to Halliburton Company. Inflatable packer with liquid resin anchored reinforcing sheath. 4,372,562, Cl. 277-34.000.
Caruthers, John E.; Jay, Robert L.; Riffel, Ronald E.; and Rothrock, Mark D., to General Motors Corporation. Aerodynamic data collection procedure. 4,372,157, Cl. 73-147.000.
Casadio, Sylvano: *See—*
  Mouzin, Gilbert; Cousse, Henri; Stenger, Antoine; and Casadio, Sylvano, 4,372,975, Cl. 424-324.000.
Casey, Gary L.: *See—*
  Elpern, David G.; and Casey, Gary L., 4,372,271, Cl. 123-445.000.
Castoe, John H. Valve adjustment apparatus. 4,372,023, Cl. 29-256.000.
Caterpillar Tractor Co.: *See—*
  Hall, Lowell R., 4,372,193, Cl. 91-420.000.
  Meismer, Richard A., 4,372,156, Cl. 73-119.00R.
Cattelani, Claude. Manual additive lamphouse for aerial images of caption stands and optical printers. 4,372,667, Cl. 355-1.000.
Catterson, Robert K.: *See—*
  Mitchell, Robert K.; and Catterson, Robert K., 4,372,433, Cl. 192-18.00R.
Ceco Corporation, The: *See—*
  Puckett, Hubert L., 4,372,022, Cl. 29-243.580.
Centaur Sciences, Inc.: *See—*
  Avakian, Emik A.; and Avakian, Souren, 4,372,304, Cl. 128-214.00E.
Cervantes, Victoria. Hairdresser chair. 4,372,605, Cl. 297-192.000.
Chamberlain, Robert E.; and Cook, Thomas G., to American Sterilizer Company. Establishing and ascertaining desired air removal in steam sterilization. 4,372,916, Cl. 422-111.000.
Chambers, Bruce B.: *See—*
  Myers, John L.; Benscoter, Richard D.; Chambers, Bruce B.; and Dyar, Ralph E., 4,373,111, Cl. 174-48.000.
Champion International Corporation: *See—*
  Thompson, Kenneth P., 4,372,737, Cl. 425-393.000.
Champlin, Charles L.; Misura, John T.; and Reiser, Carl J., to Packaging Corporation of America. Air filter assembly. 4,372,763, Cl. 55-501.000.
Chan, Hak-Foon, to Rohm and Haas Company. N-Substituted alkynyl anilines. 4,372,972, Cl. 424-304.000.
Chandross, Edwin A.: *See—*
  Barns, Robert L.; Chandross, Edwin A.; Flamm, Daniel L.; Manzione, Louis T.; and Thompson, Larry F., 4,372,834, Cl. 204-157.10R.
Chang, Richard S.: *See—*
  Minkoff, Michael D.; and Chang, Richard S., 4,372,556, Cl. 273-85.00G.
Chang, Tiang-Shing; Zientek, Lucy J.; Viningauz, Arthur; and Scheps, Marcy L., to Block Drug Company, Inc. Denture fixative composition. 4,373,036, Cl. 523-120.000.
Chao, Tai S.; Smith, Aubrey C., Jr.; and Smies, Frederic D., to Atlantic Richfield Company. Graphite dispersion. 4,372,861, Cl. 252-29.000.
Chapman, Wilson M.; and Jensen, Norman L., Jr., to Occidental Engineering Corporation. Coal-oil mixture apparatus. 4,372,751, Cl. 44-2.000.
Chatelet, Jean; Clerc, Michel; Coste, Andre; and Rigny, Paul, to Commissariat a l'Energie Atomique. Method of separating isotopes from a gas mixture. 4,372,928, Cl. 423-249.000.
Chatten, Victor H. Liquid operated clock. 4,372,688, Cl. 368-65.000.
Chatterjea, Probir K., to International Harvester Co. Clutch-clutch-brake steering mechanism for tractors. 4,372,408, Cl. 180-6.200.
Cheek, Alton E. Recirculating bearing antifriction system for well strings. 4,372,622, Cl. 308-4.00A.
Cheng, Dah Y.: *See—*
  United States of America, National Aeronautics and Space Administration; and Cheng, Dah Y., 4,372,110, Cl. 60-262.000.
Chevron Research Company: *See—*
  Carruth, H. T., Jr., 4,373,198, Cl. 367-37.000.
  Gassaway, Gary S.; Scott, William R.; and Runge, Richard J., 4,373,197, Cl. 367-36.000.
  Reed, Marion G.; Loken, Tor; and Bryhn, Odd R., 4,372,786, Cl. 106-900.000.
Chia, E. Henry, to Soutwire Company. Copper slag trap. 4,372,542, Cl. 266-229.000.
Chiao, Samuel Y., to NCR Corporation. Method of making coplanar MOS IC structures. 4,372,033, Cl. 29-571.000.
Chiba, Toshiyuki: *See—*
  Takaya, Takao; Takasugi, Hisashi; Chiba, Toshiyuki; and Tsuji, Kiyoshi, 4,372,952, Cl. 424-246.000.
Chicago Bridge & Iron Company: *See—*
  Andrepont, John S., 4,372,766, Cl. 62-532.000.
  Rothrock, Elmer W., 4,372,340, Cl. 137-576.000.
  Stafford, Donald C., 4,372,344, Cl. 137-615.000.
Chicago Rawhide Manufacturing Company: *See—*
  Lewis, Andrew D., 4,372,847, Cl. 210-86.000.
Children's Hospital Medical Center: *See—*
  Gabbay, Kenneth; and Gallop, Paul M., 4,372,747, Cl. 436-67.000.
Chin, Sze L., to Grumman Aerospace Corporation. Peak detector. 4,373,140, Cl. 307-351.000.
Ching, Ta-Yen, to General Electric Company. Silicone coating for unprimed plastic substrate and coated articles. 4,373,060, Cl. 524-767.000.
Ching, Ta-Yen, to General Electric Company. Silicone coating for unprimed plastic substrate and coated articles. 4,373,061, Cl. 524-767.000.
Chinoin Gyogyszer es Vegyeszeti Termekek Gyara: *See—*
  Takacs, Kalman; Papp, Maria H.; Kovacs, Gabor; Ajzert, Ilona K.; Simay, Antal; Nagy, Peter L.; Puskas, Marian E.; Sebestyen, Gyula; Stadler, Istvan; and Sumeghy, Zoltan, 4,373,104, Cl. 546-145.000.
Chisholm, Douglas R.; and Kurtz, Hobart L., Jr. Dynamic device address assignment mechanism for a data processing system. 4,373,181, Cl. 364-200.000.
Chisholm, William M., to Western Electric Company, Inc. Method of and apparatus for straightening terminal pins. 4,372,044, Cl. 29-845.000.
Chloride Group Limited: *See—*
  Peters, Kenneth; and Culpin, Barry, 4,373,015, Cl. 429-57.000.
Chousa, Hirotaka: *See—*
  Ichinomiya, Tsutomu; Hosoe, Mamoru; Nagayama, Masayoshi; Chousa, Hirotaka; and Kimura, Rokusaburo, 4,372,319, Cl. 128-421.000.
Christensen, Burton G.; and Shih, David H., to Merck & Co., Inc. 6-, 1-And 2-substituted-thio-1-carbadethiapen-2-em-3-carboxylic acid S-oxides. 4,372,965, Cl. 424-274.000.
Chrysler Corporation: *See—*
  Sarto, Jorma O., 4,372,261, Cl. 123-142.50E.
Chung, Rack H.; and Kray, William D., to General Electric Co. Silane-functionalized ultraviolet screen precursors. 4,372,835, Cl. 204-159.130.
Church, Peter K.; and Phillips, Alan G., to El-Chem Corporation. Rechargeable electrical storage battery with zinc anode and aqueous alkaline electrolyte. 4,372,823, Cl. 204-2.100.
Cianci, James P.: *See—*
  Villari, Frank K.; and Cianci, James P., 4,372,313, Cl. 128-295.000.
Ciba-Geigy AG: *See—*
  Ikin, John B.; and Neale, Denis M., deceased, 4,372,678, Cl. 355-37.000.
Ciba-Geigy Corporation: *See—*
  Buxbaum, Lothar; and Breitenfellner, Franz, 4,373,044, Cl. 524-132.000.
  Zink, Rudolf; and Loew, Peter, 4,372,886, Cl. 260-165.000.
Cicchetti, Osvaldo: *See—*
  Gratani, Francesco; Nelli, Giuseppe; Di Battista, Piero; and Cicchetti, Osvaldo, 4,373,042, Cl. 524-100.000.
Cichos, Barbel: *See—*
  Cichos, Claus, 4,372,088, Cl. 52-251.000.
Cichos, Claus, to Cichos, Barbel. Structure with slab beams. 4,372,088, Cl. 52-251.000.
Ciecior, Heinrich K., to Union Special G.m.b.H. Presser foot with cording attachment. 4,372,230, Cl. 112-139.000.
Cieutat, Bertrand G. Generating apparatus for a variable fluid pressure. 4,372,148, Cl. 73-4.00R.
Ciganko, David J., to Quaker Oats Company, The. Toy stitching set. 4,372,238, Cl. 112-439.000.
Cimiluca, Paul A., to Beecham Inc. Candy base and liquid center hard candy made therefrom. 4,372,942, Cl. 424-16.000.
City of Hope Research Institute: *See—*
  Itakura, Keiichi, 4,373,071, Cl. 525-375.000.
Claim Guard Associates: *See—*
  Leavitt, Alvan W.; and Primm, Alice E., 4,373,159, Cl. 343-6.50R.
Clarex Manufacturing Limited: *See—*
  Gupta, Ramesh K., 4,373,033, Cl. 521-70.000.
Clark, Keith R.; and Focia, Michael, Jr., to Rheem Manufacturing Company. Method of manufacturing foam insulated tank. 4,372,028, Cl. 29-460.000.
Clayton, Wilbur P.: *See—*
  Barrington, Burchus Q.; Clayton, Wilbur P.; and Jackson, Gerald D., 4,372,391, Cl. 166-373.000.
  Barrington, Burchus Q.; and Clayton, Wilbur P., 4,372,392, Cl. 166-373.000.
Clerbois, Lucien; and Plumet, Lucien, to Interox (Societe Anonyme). Process for inhibiting the corrosion of equipment made of titanium. 4,372,813, Cl. 162-48.000.

Clerc, Michel: *See—*
  Chatelet, Jean; Clerc, Michel; Coste, Andre; and Rigny, Paul, 4,372,928, Cl. 423-249.000.
Clerigues, Jack J. V. Installation for signalling deposit of mail in a letter box. 4,372,482, Cl. 232-36.000.
Clevepak Corporation: *See—*
  Mandt, Mikkel G., 4,372,851, Cl. 210-199.000.
Clinicon Mannheim GmbH: *See—*
  Nenninger, Klaus; and Van Rijckevorsel, Rainer, 4,372,682, Cl. 356-244.000.
Clyne, Nicholas; Sturgeon, Philip L.; and Wright, Lawrence H. Method for producing a bill, apparatus for collecting items, and a self-service shop. 4,373,133, Cl. 235-383.000.
Coach and Car Equipment Corporation: *See—*
  Feddeler, Lester H., 4,372,611, Cl. 297-371.000.
Coal Industry (Patents) Limited: *See—*
  Robinson, Joseph G.; and Barnes, David I., 4,373,089, Cl. 528-353.000.
Coca-Cola Company, The: *See—*
  Le Caire, Robert A., Jr.; and Wendt, David W., 4,372,490, Cl. 239-59.000.
Cochran, Donald D., to National Can Corporation. Thin walled plastic container construction. 4,372,455, Cl. 215-100.00A.
Cocklin, Richard F. Spark plug wire gauge. 4,372,051, Cl. 33-174.00R.
Codimag: *See—*
  Tison, Eric; and Herve, Paul, 4,372,206, Cl. 101-228.000.
Coe, Everett L.: *See—*
  Gude, Klaus E.; Felsvang, Karsten S.; and Coe, Everett L., 4,372,926, Cl. 423-244.000.
Coffin, Louis F., Jr.: *See—*
  Armijo, Joseph S.; and Coffin, Louis F., Jr., 4,372,817, Cl. 376-417.000.
Cohen, Stuart C.; and Dieck, Ronald L., to General Electric Company. Flame retardant thermoplastic compositions with reduced bloom. 4,373,047, Cl. 524-371.000.
Colamco, Inc.: *See—*
  Hammond, James A., 4,373,057, Cl. 524-700.000.
Cole, John M.: *See—*
  Basile, Rocco F.; Blum, Kenneth P.; and Cole, John M., 4,372,048, Cl. 30-124.000.
Coles, Donald K. Internal combustion engine. 4,372,269, Cl. 123-436.000.
Colgate-Palmolive Company: *See—*
  Lancz, Albert J., 4,372,788, Cl. 134-4.000.
Collette, Wayne N., to Continental Group, Inc., The. Controlled feed of stabilizing rod associated with controlled application of blowing gas. 4,372,735, Cl. 425-135.000.
Collins, David A.; and Lile, Derek L., to United States of America, Navy. Normally off InP field effect transistor making process. 4,372,032, Cl. 29-571.000.
Colt Industries Operating Corp.: *See—*
  Tice, Larry E., 4,372,222, Cl. 108-137.000.
Colvin, Alex D.: *See—*
  Butler, James W.; Colvin, Alex D.; and Schuetzle, Dennis, 4,372,155, Cl. 73-114.000.
Combustion Engineering, Inc.: *See—*
  Maliszewski, Theodore V., 4,372,496, Cl. 241-37.000.
Comeau, Joseph E. Fishing rod holder having dual mounting capabilities. 4,372,072, Cl. 43-21.200.
Commissariat a l'Energie Atomique: *See—*
  Chatelet, Jean; Clerc, Michel; Coste, Andre; and Rigny, Paul, 4,372,928, Cl. 423-249.000.
  Federspiel, Jean M., 4,372,545, Cl. 267-8.00R.
Concord Laboratories, Inc.: *See—*
  Raitto, Russell G., 4,372,325, Cl. 128-763.000.
Conklin, James O. Sizing tool for dowel ends. 4,372,356, Cl. 142-56.000.
Connor, Michael S.: *See—*
  Dolan, Francis H.; and Connor, Michael S., 4,372,734, Cl. 425-131.100.
Continental Disc Corporation: *See—*
  Paul, Herman L., Jr., 4,372,334, Cl. 137-12.000.
Continental Group, Inc., The: *See—*
  Collette, Wayne N., 4,372,735, Cl. 425-135.000.
  Harned, Frederich C.; and Galloway, Scott M., 4,372,476, Cl. 229-16.00A.
  Miller, Donald E., 4,372,146, Cl. 72-453.130.
  Newman, Fred C., 4,372,459, Cl. 220-76.000.
  Supik, Helmuth, 4,372,719, Cl. 413-9.000.
Control Data Corporation: *See—*
  Peterson, Ralph W., 4,373,162, Cl. 343-771.000.
Cook, Sanford L.; Molisani, Justin J.; and Dennison, Kenneth I., Jr., to Standard-Keil Hardware Mfg. Co., a Division of Buildex Inc. Safety latch. 4,372,591, Cl. 292-221.000.
Cook, Thomas G.: *See—*
  Chamberlain, Robert E.; and Cook, Thomas G., 4,372,916, Cl. 422-111.000.
Cookson, Alan H., to Westinghouse Electric Corp. Method of assembling a gas-insulated power transmission line with duter enclosure of carbon steel and aluminum. 4,372,043, Cl. 29-828.000.
Cooley, Claude S. Dust collector and filter unit. 4,372,762, Cl. 55-273.000.
Cooney, Charles L.: *See—*
  Langer, Robert S.; Linhardt, Robert; Cooney, Charles L.; Galliher, Parrish M.; Flanagan, Margaret M.; and Klein, Michael D., 4,373,023, Cl. 435-2.000.
Cooper, David, to Marconi Company Limited. Antenna arrangements. 4,373,160, Cl. 343-100.0SA.
Cooper, Glenn D.; and Lee, Gim F., Jr., to General Electric Company. Polyphenylene ether molding compositions that include an alkenyl aromatic resin, an ethylene propylene rubber and a triaryl phosphate. 4,373,045, Cl. 524-141.000.
Cooper, Leonard M.: *See—*
  Kiedaisch, Randall A.; and Cooper, Leonard M., 4,372,599, Cl. 294-87.200.
Coppin, William P.: *See—*
  Rollins, M. Jack; and Coppin, William P., 4,372,531, Cl. 251-174.000.
Coppola, Pasquale J.; and Dever, Gerald V., Jr., to Olin Corporation. Foam dispensing apparatus. 4,372,352, Cl. 141-1.000.
Corbin, Lawrence W., to Fort Wayne Wire Die, Inc. Wire elongation test method and apparatus. 4,372,154, Cl. 73-104.000.
Cordes, Rudolf: *See—*
  Bunger, Heinrich; Cordes, Rudolf; and Hoffmann, Gerhart, 4,372,875, Cl. 252-413.000.
Cordoba, Julio: *See—*
  Barnett, Lawrence; Cordoba, Julio; and Nuzzo, Benjamin, 4,372,419, Cl. 180-289.000.
Cork, Michael S., to Development Oil Tool Systems. Drill bit with wedge shaped eduction jets. 4,372,399, Cl. 175-65.000.
Cornelisse, Roelof, to Shell Oil Company. Process for the removal of acid gases from gas mixtures containing methane. 4,372,925, Cl. 423-226.000.
Cornell Research Foundation, Inc.: *See—*
  Kuckes, Arthur F., 4,372,398, Cl. 175-45.000.
Cornell, William D.; Crouther, Ronald; Dyer, Howard P.; and Ranford, Alan B., to Sherwood Medical Industries, Inc. Chest drainage unit. 4,372,336, Cl. 137-205.000.
Corod Manufacturing Ltd.: *See—*
  Kulhanek, Emanuel; and Aboussafy, John, 4,372,379, Cl. 166-68.500.
Cosentino, Cesare C.: *See—*
  Hatzikelis, Christopher; Madonia, Ciro; and Cosentino, Cesare C., 4,372,083, Cl. 49-462.000.
Cosserat, Dominique: *See—*
  Botton, Roger; and Cosserat, Dominique, 4,372,935, Cl. 423-393.000.
Costa, Paul. Apparatus for starting internal combustion engines. 4,372,263, Cl. 123-179.0SE.
Coste, Andre: *See—*
  Chatelet, Jean; Clerc, Michel; Coste, Andre; and Rigny, Paul, 4,372,928, Cl. 423-249.000.
Coste, Jean-Claude, to Regie National des Usines Renault. Pulse-controlled electric window raiser. 4,373,149, Cl. 318-281.000.
Coucoulas, Alexander; and Nis, John R., to Western Electric Company, Inc. Methods and apparatus for extruding articles. 4,372,771, Cl. 65-75.000.
Coulter Systems Corp.: *See—*
  Weber, Harold J., 4,372,679, Cl. 355-70.000.
Cousse, Henri: *See—*
  Mouzin, Gilbert; Cousse, Henri; Stenger, Antoine; and Casadio, Sylvano, 4,372,975, Cl. 424-324.000.
Cox, Johnny C. Method and apparatus for removing metal from a metal-laden solution. 4,372,829, Cl. 204-109.000.
Crawley, Harry D., to Versatile Cornat Corporation. Rotary switch valve. 4,372,341, Cl. 137-580.000.
Crepin, Roger, to Thomson-Brandt. Process and apparatus for transporting and dropping a plurality of charges contained in a single container and container equipped with such an apparatus. 4,372,215, Cl. 102-387.000.
Cronk, David; and Byrum, Lyle M. Landing gear for ultralight aircraft. 4,372,506, Cl. 244-100.00R.
Cross, Raymond P.; and Simpkin, Gordon T., to Pilkington Brothers Limited. Thermal treatment of glass. 4,372,774, Cl. 65-114.000.
Crout, Richard J.: *See—*
  Gilbertson, John R.; and Crout, Richard J., 4,372,978, Cl. 424-343.000.
Crouther, Ronald: *See—*
  Cornell, William D.; Crouther, Ronald; Dyer, Howard P.; and Ranford, Alan B., 4,372,336, Cl. 137-205.000.
Crown Zellerbach Corporation: *See—*
  Newkirk, David D.; and Wilhoit, Darrel L., 4,372,815, Cl. 162-158.000.
Cseh, Gyorgy: *See—*
  Ambrus, Gabor; Toth-Sarudy, Eva; Cseh, Gyorgy; Barta, Istvan; and Horvath, Gyula, 4,372,973, Cl. 424-305.000.
CTS Corporation: *See—*
  Affolder, Steven L., 4,372,903, Cl. 264-109.000.
Cubbison, Richard James, Jr., to Bell Telephone Laboratories, Incorporated. Battery feed circuit. 4,373,118, Cl. 179-77.000.
Culpin, Barry: *See—*
  Peters, Kenneth; and Culpin, Barry, 4,373,015, Cl. 429-57.000.
Curtis, Ralston: *See—*
  Papanu, Steven C.; and Curtis, Ralston, 4,372,943, Cl. 424-78.000.
Cuscurida, Michael: *See—*
  Speranza, George P.; Cuscurida, Michael; and Zimmerman, Robert L., 4,373,034, Cl. 521-177.000.
Cymbalisty, Lubomyr M.; Maskwa, Alvin J.; Trevoy, Lloyd W.; and Wojno, Jan, to Petro-Canada Exploration Inc.; Her Majesty the Queen in right of the Province of Alberta, Government of the Province of Alberta, Department of Energy and Natural Resources, Alberta Syncrude Equity; PanCanadian Petroleum Limited; Esso

Resources Canada Ltd.; Canada-Cities Service, Ltd.; Gulf Canada Limited; Alberta Energy Company Ltd.; Hudson's Bay Oil and Gas Company Limited; and Petrofina Canada Inc. Method and apparatus for sampling a core of tar sand. 4,372,174, Cl. 73-863.110.
Czok, Helmut: *See—*
  Simonis, Jurgen; and Czok, Helmut, 4,372,104, Cl. 56-341.000.
D. Swarovski & Co.: *See—*
  Ganner, Peter; and Wallner, Theodor, 4,372,987, Cl. 427-42.000.
Daenen, Robert H. C. M.; and Herlow, Erik, to Dart Industries, Inc. Ice cube making apparatus and serving system. 4,372,526, Cl. 249-119.000.
Daicel Chemical Industries Ltd.: *See—*
  Yamagami, Seiji; Nonaka, Hirohiko; Shimonaru, Tuneyoshi; Takashima, Koichi; and Kato, Yasuhiko, 4,372,846, Cl. 210-86.000.
Daimon, Hiroshi: *See—*
  Kaneda, Takaho; Ishikawa, Seiji; Daimon, Hiroshi; Katsura, Toshio; Hondo, Tadahiro; and Ueda, Masahiro, 4,373,087, Cl. 528-337.000.
Dainippon Ink and Chemicals, Inc.: *See—*
  Toriyama, Kazuhisa; Nakagomi, Tamihito; Sato, Hisato; Fujita, Yutaka; Morita, Katsuhiko; and Arai, Yoshi, 4,372,871, Cl. 252-299.610.
Dairy Farm Leasing Company: *See—*
  Keith, Alfred H., 4,372,251, Cl. 119-16.000.
Dakota Manufacturing Co., Inc.: *See—*
  Fredrickson, Ronald G.; and Bills, Joseph W., Jr., 4,372,727, Cl. 414-537.000.
Dallaire, Michel J., to Bic Corporation. Car rack. 4,372,470, Cl. 224-324.000.
Dalton, Robert E. Process for securing layers of material to surfaces. 4,372,798, Cl. 156-273.100.
Danfoss A/S: *See—*
  Petersen, Hans C.; Kyster, Erik; Thomsen, Svend E.; and Flagstad, Carl O., 4,372,413, Cl. 180-152.000.
Dangel, Henry L. A., to Dangel, Henry Leon Albert. Front set of wheels for an automobile vehicle. 4,372,418, Cl. 180-256.000.
Dangel, Henry Leon Albert: *See—*
  Dangel, Henry L. A., 4,372,418, Cl. 180-256.000.
Danguillier, Wilhelm: *See—*
  Gernhardt, Paul; Danguillier, Wilhelm; Peter, Karl; Grams, Wolfgang; Pohl, Siegfried; and Schnitzler, Peter, 4,372,754, Cl. 48-77.000.
Danieli & C. Officine Meccaniche S.p.A.: *See—*
  Sechi, Lucio, 4,372,220, Cl. 105-215.00C.
Daniels, Lowell W.: *See—*
  Luebke, Clement J.; Mitchell, John A.; and Daniels, Lowell W., 4,372,980, Cl. 426-231.000.
Dante, James G., to United States of America, Army. Thermoelectric power supply for warheads. 4,372,211, Cl. 102-207.000.
Darnanville, Jean P.: *See—*
  Germaine, Gilbert R.; and Darnanville, Jean P., 4,372,879, Cl. 252-470.000.
Dart Industries, Inc.: *See—*
  Daenen, Robert H. C. M.; and Herlow, Erik, 4,372,526, Cl. 249-119.000.
Dartmouth College, Trustees of: *See—*
  Thomae, Irving H., 4,372,692, Cl. 374-104.000.
Dassler, Karl O.; and Langseder, Neal E., to American Can Company. Retained ring tab. 4,372,462, Cl. 220-269.000.
Datasaab AB: *See—*
  Stiernspetz, Allan, 4,372,549, Cl. 271-23.000.
David, Alain: *See—*
  Berneman, Armand; David, Alain; Horaud, Florian; and Segard, Emile, 4,373,027, Cl. 435-240.000.
Davidson, Donald R.: *See—*
  Totino, Peter J.; and Davidson, Donald R., 4,372,237, Cl. 112-308.000.
Davies, David R.; Richardson, Edwin A.; and Van Zanten, Marinus, to Shell Oil Company. Method of pretreating an underground formation for silicon polyhalide consolidation. 4,372,385, Cl. 166-281.000.
Davies, John S.; and Brooks, Gerald, to Beecham Group Limited. Clavulanic acid derivatives their preparation and use. 4,372,962, Cl. 424-272.000.
Davila, Jose E.: *See—*
  Gomez, Jim H.; and Davila, Jose E., 4,372,478, Cl. 232-12.000.
Day, Alvin D.: *See—*
  Villa, Paul Y.; and Day, Alvin D., 4,372,632, Cl. 312-311.000.
Day, Janet A.; and Searle, Robert J. G., to Shell Oil Company. Compounds for the loosening of fruit and/or leaves on plants. 4,372,776, Cl. 71-90.000.
De Dietrich (USA) Inc.: *See—*
  Lerman, Michael J.; and Zamory, William, 4,372,461, Cl. 220-260.000.
Deak, Gedeon I., to Du Pont de Nemours, E. I., and Company. Process for converting cellulose directly into alkali cellulose. 4,373,098, Cl. 536-101.000.
de Buda, Eric G.; Boon, John R.; and Dolbey, Michael P. Pneumatically operated pipe crawler. 4,372,161, Cl. 73-432.00R.
Dec International, Inc.: *See—*
  Hazen, Gretz L., 4,372,983, Cl. 426-582.000.
De Coene, Frans J. G. C.; Naaktgeboren, Adrianus; and Vansteelant, Marc G., to Sperry Corporation. Automatic bale wagons. 4,372,723, Cl. 414-111.000.
Decoufle S.A.R.L.: *See—*
  Legardinier, Andre, 4,372,208, Cl. 101-366.000.
Deere & Company: *See—*
  Adickes, Henning, 4,372,577, Cl. 280-780.000.
  Ihm, Gerald J., 4,372,573, Cl. 280-477.000.
De Forrest, William E. Protecting device for padlocks or other similar locks. 4,372,138, Cl. 70-56.000.
Dehart, Marv L.; Kloostra, M. Leon; and Straub, Harold E., to Environmental Elements Corp. Flow measuring apparatus. 4,372,170, Cl. 73-861.610.
Delalande S.A.: *See—*
  Langlois, Michel; Lacour, Alain P.; Bucher, Bernard P.; and Mocquet, Gisele C., 4,372,967, Cl. 424-279.000.
Delaunay, Jean; and Le Marchand, Claude, to Societe Anonyme D.B.A. Disc brake having sliding caliper. 4,372,428, Cl. 188-73.350.
Del Principe, Robert M.; and Reichert, David A., to Mattel, Inc. Electronic baseball game. 4,372,557, Cl. 273-88.000.
del Valle, Jaime L., to Master Modular Homes, Inc. Method and apparatus for pre-casting steel reinforced concrete box-like modules. 4,372,906, Cl. 264-256.000.
Demke, Kent R.; and Dwire, Jerold D., to International Business Machines Corporation. Full page representation through dynamic mode switching. 4,373,194, Cl. 364-900.000.
Demonte, Filippo: *See—*
  Bovio, Michele; and Demonte, Filippo, 4,372,694, Cl. 400-88.000.
Dempsey, Guy C. Electronic conveyor control apparatus. 4,372,439, Cl. 198-470.000.
Dengler, Robert; and Meyer, Franz J., to Siemens Aktiengesellschaft. Method for decreasing the stop distance in moving tape devices. 4,373,171, Cl. 360-71.000.
Denkewalter, Robert G.: *See—*
  Preziosi, Anthony F.; Patel, Gordhanbhai N.; Denkewalter, Robert G.; and Baughman, Ray H., 4,373,032, Cl. 521-38.000.
Dennis, Charles A.: *See—*
  Means, Rodney J.; Plunkett, Galen P., Jr, Galen P.; Dennis, Charles A.; and Moon, John L., 4,373,183, Cl. 364-200.000.
Dennison, Kenneth I., Jr.: *See—*
  Cook, Sanford L.; Molisani, Justin J.; and Dennison, Kenneth I., Jr., 4,372,591, Cl. 292-221.000.
Denniston, James L., to Rockwell International Corporation. Selectively actuated flight simulation system for trainer aircraft. 4,372,507, Cl. 244-113.000.
Denton, Ivor E.; and Henney, John W., to United Kingdom Atomic Energy Authority. Preparation of dense ceramics. 4,372,902, Cl. 264-65.000.
Deptolla, Udo: *See—*
  Fabinski, Walter; Deptolla, Udo; and Ascherfeld, Margareta, 4,373,137, Cl. 250-343.000.
De Satnick, Allen. Tennis ball pressurizer. 4,372,095, Cl. 53-79.000.
Desjardins, Rene A., to Boeing Company, The. Six axis vibration isolation system. 4,372,431, Cl. 188-380.000.
Detroit Gasket & Mfg. Co.: *See—*
  Doerfling, Ralph G., 4,372,900, Cl. 264-45.300.
Devaud, Gerard L., to Societe d'Applications des Machines Motrices. Piston and rod assembly for sliding in a cylinder. 4,372,702, Cl. 403-24.000.
Development Oil Tool Systems: *See—*
  Cork, Michael S., 4,372,399, Cl. 175-65.000.
Dever, Gerald V., Jr.: *See—*
  Coppola, Pasquale J.; and Dever, Gerald V., Jr., 4,372,352, Cl. 141-1.000.
Dey, Philip; Gaylard, Bernard; and Taylor, David A., to BICC Limited. Manufacture of a flexible stranded optical fiber body. 4,372,792, Cl. 156-48.000.
Diamagnetics, Inc.: *See—*
  Hughes, George F., 4,372,042, Cl. 29-825.000.
Diana, Guy D., to Sterling Drug Inc. Novel aryl-aliphatic ketone and its use as an antiviral agent. 4,372,976, Cl. 424-331.000.
Di Battista, Piero: *See—*
  Gratani, Francesco; Nelli, Giuseppe; Di Battista, Piero; and Cicchetti, Osvaldo, 4,373,042, Cl. 524-100.000.
Dickenson, Royston J., to General Electric Company. Turbine bypass desuperheater control system. 4,372,125, Cl. 60-660.000.
Dieck, Ronald L.; and Kostelnik, Robert J., to General Electric Company. Molded articles of improved impact resistance and compositions therefor. 4,373,067, Cl. 525-146.000.
Dieck, Ronald L.: *See—*
  Cohen, Stuart C.; and Dieck, Ronald L., 4,373,047, Cl. 524-371.000.
Diehl Machines, Div. of Waltham Watch Company: *See—*
  Force, Wallace B., Jr.; and Jefferson, Francis D., 4,372,355, Cl. 142-55.000.
Diehl, Robert J.; Godare, William L.; and Wells, Frederic D., to W-K-M Wellhead Systems, Inc. Packing support for mounting a well casing packing. 4,372,563, Cl. 277-117.000.
Diesel Kiki Co. Ltd.: *See—*
  Hiyama, Yasuhiro; Oshizawa, Hidekazu; Okamoto, Kenji; and Kobayashi, Masayoshi, 4,372,266, Cl. 123-357.000.
DiGiacomo, Peter M.: *See—*
  Parziale, Victor E.; Dines, Martin B.; and DiGiacomo, Peter M., 4,373,079, Cl. 528-9.000.
Dillon, Robert E.: *See—*
  Bower, Arnold B., Jr.; and Dillon, Robert E., 4,372,708, Cl. 405-261.000.
Dilot, Rolf M.; and Hakansson, Jan T., to Tetra Pak International AB. Method for the application of suction tubes to packing containers. 4,372,797, Cl. 156-249.000.
Dimetrics, Inc.: *See—*
  Taff, James T., 4,372,474, Cl. 228-29.000.

Dimitraki, Lolita S.: *See—*
  Dimitraki, Sergei N.; and Dimitraki, Lolita S., 4,372,497, Cl. 242-7.030.
Dimitraki, Sergei N.; and Dimitraki, Lolita S. Method of manufacturing wound items from coaxial microwire and device therefor. 4,372,497, Cl. 242-7.030.
Dineen, John J., to Mechanical Technology Incorporated. Stirling engine control mechanism and method. 4,372,116, Cl. 60-525.000.
Dines, Martin B.: *See—*
  Parziale, Victor E.; Dines, Martin B.; and DiGiacomo, Peter M., 4,373,079, Cl. 528-9.000.
Discovision Associates: *See—*
  Cane, Albert; and Brown, Mitchell P., 4,372,741, Cl. 425-556.000.
Disteldorf, Josef; Hubel, Werner; Brandt, Siegfried; and Haage, Hans-Jurgen. Transparent polyamides from branched chain diamine and cycloaliphatic diamine. 4,373,088, Cl. 528-338.000.
Dixon, Kevin L.: *See—*
  Seidel, Michael J.; and Dixon, Kevin L., 4,372,993, Cl. 427-193.000.
DM Systems, Inc.: *See—*
  Drennan, Denis B.; Maylahn, Donald J.; and Schleicher, Thomas R., 4,372,300, Cl. 128-83.000.
Dr. C. Otto & Comp. G.m.b.H.: *See—*
  Gernhardt, Paul; Danguillier, Wilhelm; Peter, Karl; Grams, Wolfgang; Pohl, Siegfried; and Schnitzler, Peter, 4,372,754, Cl. 48-77.000.
Doerfling, Ralph G., to Detroit Gasket & Mfg. Co. Method of forming reinforced foam structure. 4,372,900, Cl. 264-45.300.
Doetsch, Hans-Peter: *See—*
  Pohlmann, Erich; and Doetsch, Hans-Peter, 4,372,127, Cl. 62-6.000.
Doggett, Robert V., Jr.; and Ricketts, Rodney H., to United States of America, National Aeronautics and Space Administration. Aeroelastic instability stoppers for wind tunnel models. 4,372,158, Cl. 73-147.000.
Doggett, Robert V., Jr.; and Ricketts, Rodney H., to United States of America, National Aeronautics and Space Administration. Aeroelastic instability stoppers for wind tunnel models. 4,372,159, Cl. 73-147.000.
Dola, Frank P., to AMP Incorporated. Brake fluid level indicator. 4,373,155, Cl. 340-623.000.
Dolan, Francis H.; and Connor, Michael S., to General Foods Inc. Apparatus for mixing and extruding simulated meat mix for pet food. 4,372,734, Cl. 425-131.100.
Dolbey, Michael P.: *See—*
  de Buda, Eric G.; Boon, John R.; and Dolbey, Michael P., 4,372,161, Cl. 73-432.00R.
Dolenc, Anton; and Visek, Tomas, to Steyr-Daimler-Puch Aktiengesellschaft. Reciprocating-piston drive mechanism. 4,372,179, Cl. 74-579.00E.
Donhauser, William H. Recreational basin. 4,371,995, Cl. 4-538.000.
Donkle, Lucius B., Jr.: *See—*
  Rasmussen, George E.; and Donkle, Lucius B., Jr., 4,372,451, Cl. 211-187.000.
Dorius, John. Mass flow thermal compensator. 4,372,195, Cl. 98-115.00R.
Dotts, Robert L.: *See—*
  Schomburg, Calvin; and Dotts, Robert L., 4,373,003, Cl. 428-241.000.
Dover Corporation: *See—*
  Weas, Tom, 4,372,353, Cl. 141-206.000.
Dow Chemical Company, The: *See—*
  Porter, David L., 4,372,924, Cl. 423-179.000.
Dowding, John G.; Turner, Peter R.; and Hudson, Robert J., to Molins Limited. Cigarette weight monitoring system. 4,373,188, Cl. 364-552.000.
Drach, Edward. Multi-purpose kitchen device. 4,372,448, Cl. 211-41.000.
Drake, Eric F., to Reed Rock Bit Company. Cutting teeth for rolling cutter drill bit. 4,372,404, Cl. 175-374.000.
Drawert, Manfred: *See—*
  Bolze, Manfred; and Drawert, Manfred, 4,373,085, Cl. 528-291.000.
Drennan, Denis B.; Maylahn, Donald J.; and Schleicher, Thomas R., to DM Systems, Inc. Cast wedge. 4,372,300, Cl. 128-83.000.
Dresser Industries, Inc.: *See—*
  Efferson, Chester C., 4,372,338, Cl. 137-240.000.
  Rosenhauch, Irwin; and Ellis, Gary D., 4,372,527, Cl. 251-1.00A.
Drysdale, William H.: *See—*
  Kirkendall, Richard D.; Drysdale, William H.; Kokinakis, Louise D.; and Burns, Bruce P., 4,372,217, Cl. 102-521.000.
Duch, David S.; Nichol, Charles A.; and Sigel, Carl W., to Burroughs Wellcome Co. Treatment with dialkoxy pyridopyrimidines. 4,372,957, Cl. 424-251.000.
Dudziak, Ernst; Kwauka, Gerd-Georg; Plate, Arthur; and Lubeck, Hermann, to Reinhard Mohn G.m.b.H. Device for producing a bundle of paper sheets. 4,372,201, Cl. 100-7.000.
Dufresne, Raymond A., to Eberts, Terry R.; Haynes, Herbert E., Jr.; and Ajeman, Matthew L., S. Battery connector. 4,372,636, Cl. 339-237.000.
Dugger, Doyle L., to Bandag Incorporated. Method and apparatus for non-destructive inspection of tires. 4,372,366, Cl. 157-13.000.
Dulcop International S.p.A.: *See—*
  Fiorani, Franco, 4,372,281, Cl. 124-16.000.
Dunkl, Franz S.: *See—*
  Finkelstein, Manuel; Ross, Sidney D.; and Dunkl, Franz S., 4,373,176, Cl. 361-433.000.
  Finkelstein, Manuel; Dunkl, Franz S.; and Ross, Sidney D., 4,373,177, Cl. 361-433.00A.
Dunlop Limited: *See—*
  Bond, Robert; and Blythe, Robert J., 4,373,069, Cl. 525-237.000.
Dunlop, Peter B., to Aristoscot Designs Limited. Turntable mountings for record players. 4,373,200, Cl. 369-263.000.
Dunn, David J.: *See—*
  Watson, Colin; and Dunn, David J., 4,372,245, Cl. 118-56.000.
Dunn, William H.; and Horey, Leonard I., to Singer Company, The. Electronically controlled sewing machine arranged to sew the mirror image of a pattern in the feeding direction. 4,372,232, Cl. 112-158.00E.
Du Pont de Nemours, E. I., and Company: *See—*
  Deak, Gedeon I., 4,373,098, Cl. 536-101.000.
  Levitt, George, 4,372,778, Cl. 71-94.000.
  Richardson, Paul N., 4,373,049, Cl. 524-375.000.
  Robinson, Ivan M., 4,373,084, Cl. 528-79.000.
  Whitney, Joel G., 4,372,964, Cl. 424-273.00R.
Dur, Bernhard, to Metacon AG. Method and apparatus for the replacement of bottom closures of track-mounted transfer ladles. 4,372,537, Cl. 266-45.000.
Durant, Graham J.; and Miles, Peter D., to Smith Kline & French Laboratories Limited. Oxazolyl, isoxazolyl, triazolyl and thiadiazolyl alkyl bisamidines. 4,372,963, Cl. 424-272.000.
Duro Dyne Corporation: *See—*
  Hinden, Milton, 4,372,627, Cl. 384-260.000.
Dwire, Jerold D.: *See—*
  Demke, Kent R.; and Dwire, Jerold D., 4,373,194, Cl. 364-900.000.
Dyar, Ralph E.: *See—*
  Myers, John L.; Benscoter, Richard D.; Chambers, Bruce B.; and Dyar, Ralph E., 4,373,111, Cl. 174-48.000.
Dyben, Jerry F.: *See—*
  Pilat, Eugene R.; Franks, George J., Jr.; and Dyben, Jerry F., 4,372,590, Cl. 292-33.000.
Dyer, Howard P.: *See—*
  Cornell, William D.; Crouther, Ronald; Dyer, Howard P.; and Ranford, Alan B., 4,372,336, Cl. 137-205.000.
Dyett, Derek H.; and Thorp, Neil, to Molins Limited. Cutting head for a cigarette filter attachment machine. 4,372,327, Cl. 131-95.000.
Dynamit Nobel Aktiengesellschaft: *See—*
  Bunger, Heinrich; Cordes, Rudolf; and Hoffmann, Gerhart, 4,372,875, Cl. 252-413.000.
E-Systems, Inc.: *See—*
  Mills, David A.; and Turner, Norris G., 4,373,185, Cl. 364-478.000.
  Sanders, David E., 4,373,141, Cl. 307-351.000.
Eastman Kodak Company: *See—*
  Fletcher, George L.; and Wadsworth, Donald H., 4,373,021, Cl. 430-374.000.
  Lu, Wei C., 4,373,131, Cl. 219-216.000.
Eaton Corporation: *See—*
  Borugian, Dennis A., 4,372,430, Cl. 188-329.000.
  Gamundi, Reynold F., 4,372,426, Cl. 187-1.00R.
  Mazur, Joseph S., 4,372,409, Cl. 180-54.00A.
Ebauches, S.A.: *See—*
  Remy, Grandjean, 4,372,689, Cl. 368-155.000.
Eberts, Terry R.: *See—*
  Dufresne, Raymond A., 4,372,636, Cl. 339-237.000.
Eckert, Heiner. Method for reduction of reducible groups. 4,372,893, Cl. 260-465.00E.
Eckert, Robert C.: *See—*
  Phillips, Richard B.; Kempf, Arthur W.; and Eckert, Robert C., 4,372,812, Cl. 162-40.000.
Economics Laboratory Inc.: *See—*
  Mahoney, Dennis F.; Kober, Alfred E.; and Risbud, Subhash H., 4,372,227, Cl. 110-342.000.
  Mehus, Richard J., 4,372,345, Cl. 137-636.000.
Edahiro, Takao: *See—*
  Okamoto, Katsunari; Edahiro, Takao; Kawana, Akio; and Miya, Tetsuo, 4,372,647, Cl. 350-96.330.
Edinger, Franz K.: *See—*
  Svoboda, Josef; and Edinger, Franz K., 4,372,574, Cl. 280-634.000.
Edmonds, James T., Jr., to Phillips Petroleum Company. Arylene sulfide polymer preparation. 4,373,090, Cl. 528-387.000.
Edmonds, James T., Jr., to Phillips Petroleum Company. Arylene sulfide polymer purification. 4,373,091, Cl. 528-481.000.
Edwards, David T.: *See—*
  Balme, Michael J.; and Edwards, David T., 4,373,154, Cl. 340-347.0DD.
Edwards, John V.: *See—*
  Steer, Peter L.; and Edwards, John V., 4,372,308, Cl. 128-283.000.
EerNisse, Errol P.; and Paros, Jerome M., to Quartex, Inc. Resonator force transducer. 4,372,173, Cl. 73-862.590.
Efferson, Chester C., to Dresser Industries, Inc. High pressure valve assembly. 4,372,338, Cl. 137-240.000.
Egyt Gyogyszervegyeszeti Gyar: *See—*
  Benko, Pal; Bozsing, Daniel; Gundel, Janos; and Magyar, Karoly, 4,373,100, Cl. 542-439.000.
  Benko, Pal; Bozsing, Daniel; Gundel, Janos; and Magyar, Karoly, 4,373,101, Cl. 542-440.000.
Ehlers, Joern; and Haukelt, Helmut, to British Petroleum Company Limited, The. Heat storage medium of $NaOH\text{-}H_2O\text{-}TeO_2$. 4,372,866, Cl. 252-70.000.
Ehret, Robert J.: *See—*
  Stephens, Donald E.; and Ehret, Robert J., 4,372,150, Cl. 73-40.50R.
Ehrlich, Richard A., to Knostman, Gary J., Trustee of Metro Manufacturing of Texas and Metro Retailing of Texas, Inc. Knockdown furniture construction. 4,372,224, Cl. 108-159.000.

Eichlin, Harold E. Splitting axe. 4,372,360, Cl. 145-2.00R.
Eidschun, Charles D., to Micro-Plate, Inc. Plating sparger and method. 4,372,825, Cl. 204-27.000.
Eilingsfeld, Heinz; Hansen, Guenter; Seybold, Guenther; and Zeidler, Georg, to BASF Aktiengesellschaft. Bisazo dyes containing a 2-amino-substituted thiazole radical. 4,372,885, Cl. 260-158.000.
Eisenberg, Joel H.: *See—*
Tringali, Robert D., 4,372,062, Cl. 36-120.000.
Eisenhauer, Elroy C. Panel marking construction. 4,372,050, Cl. 33-174.00G.
El-Chem Corporation: *See—*
Church, Peter K.; and Phillips, Alan G., 4,372,823, Cl. 204-2.100.
Electric Power Research Institute, Inc.: *See—*
Kulik, Conrad J.; and Lebowitz, Howard E., 4,372,838, Cl. 208-10.000.
Electricite de France (Service National): *See—*
Cachera, Pierre C., 4,372,911, Cl. 376-349.000.
Electro-Nucleonics, Inc.: *See—*
Mandle, Richard M.; and Wong, Yuan N., 4,372,745, Cl. 436-537.000.
Elert, Karl; and Westphal, John C., to Jos. Schlitz Brewing Company. Apparatus for forming a domed bottom in a can body. 4,372,143, Cl. 72-343.000.
Eli Lilly and Company: *See—*
Herrold, Anne M., 4,372,944, Cl. 424-83.000.
Eliason, Andrew: *See—*
Shapiro, Julius; and Eliason, Andrew, 4,372,315, Cl. 128-303.180.
Elliott, Robert L.; Engel, Lawrence J.; and Gardiner, J. Brooke, to Exxon Research & Engineering Co. Oil compositions containing oil-soluble, oxidatively and mechanically degraded ethylene copolymers. 4,372,863, Cl. 252-51.50A.
Ellis, Benjamin C., Jr., to Western Electric Company, Inc. Reverse oscillated lay cable. 4,372,105, Cl. 57-204.000.
Ellis, Gary D.: *See—*
Rosenhauch, Irwin; and Ellis, Gary D., 4,372,527, Cl. 251-1.00A.
Elpern, David G.; and Casey, Gary L., to Bendix Corporation, The. Single point intermittent flow fuel injection. 4,372,271, Cl. 123-445.000.
Elser, Wolfgang: *See—*
Neumann, Peter; Elser, Wolfgang; Bock, Gustav; and Kermer, Wolf-Dieter, 4,373,102, Cl. 544-143.000.
Elsley, Richard K.: *See—*
Tittmann, Bernhard R.; Ahlberg, Lloyd A.; and Elsley, Richard K., 4,372,163, Cl. 73-602.000.
Emerson Electric Co.: *See—*
Visos, Charles D.; and Ferguson, James M., 4,372,290, Cl. 126-355.000.
Emhart Industries, Inc.: *See—*
Gater, Arnold C., 4,372,594, Cl. 292-337.000.
Pomerantz, Daniel I.; and Baxter, Richard V., Jr., 4,372,054, Cl. 34-44.000.
Emmons, William D.; and Feely, Wayne E., to Rohm and Haas Company. Ambient hydrocurable coating compositions. 4,373,008, Cl. 428-413.000.
Engel, Lawrence J.: *See—*
Elliott, Robert L.; Engel, Lawrence J.; and Gardiner, J. Brooke, 4,372,863, Cl. 252-51.50A.
Engelhard Corporation: *See—*
Washabaugh, Frank J., 4,373,037, Cl. 523-155.000.
Engelstein, Shmuel: *See—*
Hoffman, Arnold; and Engelstein, Shmuel, 4,373,022, Cl. 430-434.000.
Enokimoto, Akito: *See—*
Tsuchiya, Toshio; Enokimoto, Akito; Mizushima, Sadao; and Takano, Suwaji, 4,372,602, Cl. 296-78.00R.
Enrecon, Inc.: *See—*
Tolman, Radon; and Stephens, Frank M., Jr., 4,372,755, Cl. 48-197.00R.
Enshu Limited: *See—*
Murakami, Kunio, 4,372,728, Cl. 414-590.000.
Enso-Gutzeit Osakeyhtio : *See—*
Marttinen, Toivo, 4,372,047, Cl. 30-123.300.
Envirex Inc.: *See—*
Saffran, Edward P., 4,372,895, Cl. 261-92.000.
Environmental Elements Corp.: *See—*
Dehart, Marv L.; Kloostra, M. Leon; and Straub, Harold E., 4,372,170, Cl. 73-861.610.
EOTec Corporation: *See—*
Maklad, Mokhtar S., 4,372,767, Cl. 65-3.120.
Erdweg, Josef: *See—*
Krasborn, Gottfried; Roentgen, Paul; Meier, Wilhelm; and Erdweg, Josef, 4,373,130, Cl. 219-203.000.
Ericsson, Axel B. R., to Frelena AB. Truss of lattice type. 4,372,093, Cl. 52-694.000.
Eriksson, Hans: *See—*
Aslund, Christer; Eriksson, Hans; and Tornberg, Claes, 4,373,012, Cl. 428-558.000.
Erlandsson, Kjell I., to Kelley Company Inc. Liquid waste feeding system for an incinerator. 4,372,226, Cl. 110-238.000.
Erlich, Egon. Adhesive sign and method of making. 4,372,070, Cl. 40-595.000.
Ermanco Incorporated: *See—*
Fleischauer, Fred J., 4,372,442, Cl. 198-790.000.
Ernst Leitz Wetzlar GmbH: *See—*
Lisfeld, Robert; and Bender, Reinhold, 4,372,650, Cl. 350-252.000.
Espe Fabrik Parmazeutischer Praparate GmbH: *See—*
Schmitt, Werner; Purrmann, Robert; Jochum, Peter; and Hubner, Heinz-Joachim, 4,372,836, Cl. 204-159.230.
Espenscheid, Wilton F.: *See—*
Paul, James M.; and Espenscheid, Wilton F., 4,372,616, Cl. 299-5.000.
Essilor International (Compagnie Generale d'Optique): *See—*
Lombard, Gerard, 4,372,368, Cl. 164-332.000.
Esso Resources Canada Ltd.: *See—*
Cymbalisty, Lubomyr M.; Maskwa, Alvin J.; Trevoy, Lloyd W.; and Wojno, Jan, 4,372,174, Cl. 73-863.110.
Estes, Howard A., Jr.: *See—*
Grace, Phillip F.; and Estes, Howard A., Jr., 4,373,134, Cl. 235-386.000.
Etablissements EVIRA: *See—*
Pailler, Jean-Yves, 4,372,524, Cl. 249-79.000.
Ets. Destouche: *See—*
Tison, Eric; and Herve, Paul, 4,372,206, Cl. 101-228.000.
Evans Products Company: *See—*
Blout, Bennett O., 4,372,716, Cl. 410-134.000.
EVG Entwicklungs-und-Verwertungs Gesellschaft mbH: *See—*
Schmidt, Gerhard; Ritter, Klaus; Ritter, Gerhard; and Ritter, Josef, 4,372,350, Cl. 140-112.000.
Evora, Victor. Sleeve protector for venting pipes. 4,372,585, Cl. 285-43.000.
Exxon Production Research Co.: *See—*
Young, Kenneth E., 4,372,706, Cl. 405-195.000.
Exxon Research and Engineering Co.: *See—*
Bearden, Roby; and Stuntz, Gordon F., 4,372,840, Cl. 208-113.000.
Elliott, Robert L.; Engel, Lawrence J.; and Gardiner, J. Brooke, 4,372,863, Cl. 252-51.50A.
Liotta, Ronald, 4,372,750, Cl. 44-1.00R.
Miller, Harold N., 4,372,862, Cl. 252-33.000.
Stuntz, Gordon F.; and Bearden, Roby, 4,372,841, Cl. 208-113.000.
Fabinski, Walter; Deptolla, Udo; and Ascherfeld, Margareta, to Hartmann & Braun Aktiengesellschaft. Radiation detection and receiving in nondispersive infrared gas analyzer. 4,373,137, Cl. 250-343.000.
Fahim, Mostafa S. Treatment of acne and skin disorders and compositions therefor. 4,372,296, Cl. 128-24.00A.
Fahrbach, Erich: *See—*
Knoke, Jurgen; Jost, Manfred; Fahrbach, Erich; and Tecl, Bohuslav, 4,373,000, Cl. 428-198.000.
Fantuzzo, Joseph; and Till, Henry R., to Xerox Corporation. Electrophotographic printing machine. 4,372,669, Cl. 355-3.00R.
Farnhill, William M.; and Parker, Alan. Roller for friction spinning apparatus. 4,372,109, Cl. 57-401.000.
Farrant, David J. R., to Automotive Products Limited. Ball and socket joints. 4,372,621, Cl. 308-2.00R.
Faull, James K. Rocker structure for rocking chairs. 4,372,606, Cl. 297-265.000.
Favret, Uncas, Jr. Offshore platform deck drainage. 4,372,757, Cl. 55-46.000.
Fecske, Aurel J., to Alfa-Laval AB. Multiple hydrocyclone separator. 4,372,845, Cl. 209-211.000.
Feddeler, Lester H., to Coach and Car Equipment Corporation. Seat with adjustable back. 4,372,611, Cl. 297-371.000.
Feder, Alvin, to Motorola, Inc. Adjustable transducer. 4,373,119, Cl. 179-110.00A.
Federspiel, Jean M., to Commissariat a l'Energie Atomique. Shock absorber for a vehicle with a flexible suspension. 4,372,545, Cl. 267-8.00R.
Feely, Wayne E.: *See—*
Emmons, William D.; and Feely, Wayne E., 4,373,008, Cl. 428-413.000.
Feldkamper, Richard: *See—*
Achelpohl, Fritz; and Feldkamper, Richard, 4,372,436, Cl. 198-377.000.
Felsvang, Karsten S.: *See—*
Gude, Klaus E.; Felsvang, Karsten S.; and Coe, Everett L., 4,372,926, Cl. 423-244.000.
Fendler, Eleanor J.; and Bernardin, Leo J., to Kimberly-Clark Corporation. Absorbent pad including a microfibrous web. 4,372,312, Cl. 128-290.00R.
Fera, Julius J.: *See—*
Valentine, John J.; and Fera, Julius J., 4,372,144, Cl. 72-352.000.
Ferguson, Douglas J.: *See—*
Kowalski, Daniel J.; and Ferguson, Douglas J., 4,372,469, Cl. 224-321.000.
Ferguson, James M.: *See—*
Visos, Charles D.; and Ferguson, James M., 4,372,290, Cl. 126-355.000.
Ferguson, Robert M.: *See—*
Azar, Jack C.; Henry, Arnold W.; and Ferguson, Robert M., 4,372,246, Cl. 118-60.000.
Ferrando, Carlo: *See—*
Triplett, Baylor B.; Ferrando, Carlo; and Galli, Guido, 4,372,808, Cl. 156-655.000.
Ferrari, Lorenzo: *See—*
Bruzzese, Tiberio; and Ferrari, Lorenzo, 4,372,961, Cl. 424-267.000.
Fetaud, Henri: *See—*
Bocourt, Francois; and Fetaud, Henri, 4,372,541, Cl. 266-220.000.
Fette, Bruce A.; Harte, Bruce D.; and Tennyson, Bill E., to Motorola Inc. Absolute magnitude difference function generator for an LPC system. 4,373,191, Cl. 364-724.000.

Feuerstein, Diane: *See—*
Snyder, William R.; and Feuerstein, Diane, 4,372,870, Cl. 252-180.000.
Fiat-Allis Construction Machinery, Inc.: *See—*
Loken, Arlin D.; and Luebkemann, Leroy, 4,372,410, Cl. 180-89.120.
Fields, John T.; and Lee, Cecil D. Method for ultrasonic cleaning of radiators. 4,372,787, Cl. 134-1.000.
Fink, Herbert: *See—*
Besecke, Siegmund; Fink, Herbert; Sutterlin, Norbert; Markert, Gerhard; Schroder, Gunter; and Tilch, Willi, 4,373,056, Cl. 524-547.000.
Fink, Raymond W., to Tool Dynamics, Inc. Auxiliary towel rack. 4,372,449, Cl. 211-86.000.
Finkelstein, Manuel; Ross, Sidney D.; and Dunkl, Franz S., to Sprague Electric Company. Electrolytic capacitor for at least 200 V service. 4,373,176, Cl. 361-433.000.
Finkelstein, Manuel; Dunkl, Franz S.; and Ross, Sidney D., to Sprague Electric Company. High temperature electrolytic capacitor. 4,373,177, Cl. 361-433.00A.
Fiorani, Franco, to Dulcop International S.p.A. Spring type boomerang projecting pistol. 4,372,281, Cl. 124-16.000.
Firestone Tire & Rubber Company, The: *See—*
Gunesin, Binnur; Hamed, Gary R.; Kang, Jung W.; and Schulz, Donald N., 4,373,068, Cl. 525-218.000.
Firey, Joseph C. Char burning free piston gas generator. 4,372,256, Cl. 123-23.000.
Firmenich SA: *See—*
Ohloff, Gunther; and Giersch, Wolfgang K., 4,372,881, Cl. 252-522.00R.
Fischer, Artur. Drill tool. 4,372,401, Cl. 175-209.000.
Fischer, Hannes: *See—*
Ritz, Jurgen; Fischer, Hannes; and Plum, Helmut, 4,373,078, Cl. 526-317.000.
Fish, Irving; Schwartz, Stephen A.; and Samuels, Stanley, to New York University. Anticonvulsive compositions and method of treating convulsive disorders. 4,372,974, Cl. 424-319.000.
Fisher, Alfred J., III; and Bell, Robert L., to Fisher Corporation. Silent seat back recliner mechanism. 4,372,610, Cl. 297-367.000.
Fisher Corporation: *See—*
Fisher, Alfred J., III; and Bell, Robert L., 4,372,610, Cl. 297-367.000.
Fisher, Wayland I.; and Petersen, Marvin J., to J. R. Simplot Company. Cutting assembly. 4,372,184, Cl. 83-98.000.
Fishgal, Semyon I. Fuel-feed system. 4,372,491, Cl. 239-102.000.
Fitch, Arthur H.: *See—*
Zucker, Joseph; and Fitch, Arthur H., 4,372,768, Cl. 65-4.210.
Fixel, Irving E. Abduction pillow with storage cavity. 4,372,299, Cl. 128-80.00A.
Flagstad, Carl O.: *See—*
Petersen, Hans C.; Kyster, Erik; Thomsen, Svend E.; and Flagstad, Carl O., 4,372,413, Cl. 180-152.000.
Flaherty, John J.: *See—*
O'Connor, Donald T.; Lorenzi, Donald E.; Flaherty, John J.; and Schaefer, Edward, 4,372,658, Cl. 354-63.000.
Flamm, Daniel L.: *See—*
Barns, Robert L.; Chandross, Edwin A.; Flamm, Daniel L.; Manzione, Louis T.; and Thompson, Larry F., 4,372,834, Cl. 204-157.10R.
Flanagan, Margaret M.: *See—*
Langer, Robert S.; Linhardt, Robert; Cooney, Charles L.; Galliher, Parrish M.; Flanagan, Margaret M.; and Klein, Michael D., 4,373,023, Cl. 435-2.000.
Fleischauer, Fred J., to Ermanco Incorporated. Torque-transmitting drive. 4,372,442, Cl. 198-790.000.
Fleissner, Hans. Apparatus and process for packaging synthetic fibers in bales. 4,372,101, Cl. 53-435.000.
Fleming, Daniel J.: *See—*
Bergeron, D. L.; Fleming, Daniel J.; and Stephens, Geoffrey B., 4,373,166, Cl. 357-15.000.
Flemings, Merton C.; and Matsuniya, Tooru, to Massachusetts Institute of Technology. Continuous process for forming sheet metal from an alloy containing non-dendritic primary solid. 4,372,369, Cl. 164-482.000.
Fletcher, George L.; and Wadsworth, Donald H., to Eastman Kodak Company. Indolizinone dyes and compositions, elements and methods using same. 4,373,021, Cl. 430-374.000.
Flower, Wallace C., to Lord Corporation. Truck cab tilt mechanism. 4,372,411, Cl. 180-89.150.
Flutec Fluidtechnische Gerate GmbH: *See—*
Klauck, Manfred, 4,372,849, Cl. 210-167.000.
Focia, Michael, Jr.: *See—*
Clark, Keith R.; and Focia, Michael, Jr., 4,372,028, Cl. 29-460.000.
Fogg, O. Douglas: *See—*
Haag, George A.; Fogg, O. Douglas; Greenley, Gordon A.; Sheppard, Steve A.; and Terry, F. Duncan, 4,373,193, Cl. 364-900.000.
Fogle, Harold W. Method of treating diseased organ. 4,372,305, Cl. 128-214.00B.
Fohl, Artur, to REPA Feinstanzwerk GmbH. Belt adjusting device for a safety belt. 4,372,012, Cl. 24-68.00R.
Fonda-Bonardi, Giusto. Fluid flow control system. 4,372,731, Cl. 415-166.000.
Force, Wallace B., Jr.; and Jefferson, Francis D., to Diehl Machines, Div. of Waltham Watch Company. Wood turning lathe apparatus. 4,372,355, Cl. 142-55.000.
Ford, Harry S., Jr.; and Hamparian, Nshan, to General Motors Corporation. V-Type engine intake with vibration isolated manifold connector. 4,372,120, Cl. 60-605.000.
Ford Motor Company: *See—*
Ackerman, Allen D.; Perkey, Conrad G.; Martin, Robert A.; and Justusson, William M., 4,372,112, Cl. 60-323.000.
Bomback, John L., 4,372,748, Cl. 436-73.000.
Butler, James W.; Colvin, Alex D.; and Schuetzle, Dennis, 4,372,155, Cl. 73-114.000.
Kaniut, Herbert, 4,372,262, Cl. 123-179.00J.
McCarthy, Shaun L.; and Lambe, John J., 4,373,145, Cl. 313-503.000.
Forgione, Joseph. Heat releasable window guard. 4,372,081, Cl. 49-8.000.
Formax, Inc.: *See—*
Sandberg, Glenn A., 4,372,008, Cl. 17-32.000.
Forsheda Gummifabrik AB: *See—*
Bohman, Nils-Erik, 4,372,905, Cl. 264-249.000.
Fort Wayne Wire Die, Inc.: *See—*
Corbin, Lawrence W., 4,372,154, Cl. 73-104.000.
Fortier, Jacques. Rotating wedge for blocking up the dumping platform of a truck in dumping position. 4,372,614, Cl. 298-17.00B.
Fosdick, Dale P.: *See—*
Rosaen, Borje O.; and Fosdick, Dale P., 4,372,855, Cl. 210-316.000.
Fossi, Paolo; and Sambarino, Emilio. Process for the recovery of indium. 4,372,922, Cl. 423-112.000.
Four Star Corporation: *See—*
Kowalski, Daniel J.; and Ferguson, Douglas J., 4,372,469, Cl. 224-321.000.
Fowler, Gary P. Palm guard. 4,371,984, Cl. 2-20.000.
Fowler, George B., to Humanicare International Inc. Moisture absorbent pad. 4,372,309, Cl. 128-284.000.
Foxboro Company, The: *See—*
Brown, Christopher R.; and Olsen, Everett O., 4,372,164, Cl. 73-704.000.
Frame, Norman J., to W. H. Brady Co. Capacitance switch. 4,373,122, Cl. 200-159.00B.
Frame, Norman J., to W. H. Brady Co. Capacitance switch. 4,373,124, Cl. 200-159.00B.
Frank J. Zamboni & Co.: *See—*
Zamboni, Frank J., 4,372,617, Cl. 299-24.000.
Franke, Kurt, to Siemens Aktiengesellschaft. Cathode arrangement for an X-ray tube. 4,373,144, Cl. 313-338.000.
Franks, George J., Jr.: *See—*
Pilat, Eugene R.; Franks, George J., Jr.; and Dyben, Jerry F., 4,372,590, Cl. 292-33.000.
Franse, Albert D.: *See—*
Watson, Frederick D.; Mayse, Weldon D.; and Franse, Albert D., 4,372,837, Cl. 204-186.000.
Franz Plasser Bahnbaumaschinen Industriellgesellschaft m.b.H.: *See—*
Theurer, Josef, 4,372,714, Cl. 409-293.000.
Franzkoch, Bernd: *See—*
Menges, George; Kircher, Klaus; and Franzkoch, Bernd, 4,372,898, Cl. 264-22.000.
Fredrickson, Ronald G.; and Bills, Joseph W., Jr., to Dakota Manufacturing Co., Inc. Trailer including a multiple fold powered ramp tail. 4,372,727, Cl. 414-537.000.
Frelena AB: *See—*
Ericsson, Axel B. R., 4,372,093, Cl. 52-694.000.
Friederich, Ernst: *See—*
Vetter, Heinz; and Friederich, Ernst, 4,372,739, Cl. 425-466.000.
Frisch, Georg D.; and Ward, William, Jr., to United States of America, Navy. Dynamic kickplate deployment system. 4,372,508, Cl. 244-122.0AG.
Fritze, Gary D.; and Graham, Joseph, to Minnesota Mining and Manufacturing Company. Heat- and flame-resistant sheet material. 4,372,997, Cl. 428-144.000.
Froelich, Jerry W.: *See—*
Strauss, Harry W.; Callahan, Ronald J.; and Froelich, Jerry W., 4,372,294, Cl. 128-1.100.
Fruehauf Corporation: *See—*
Stanczak, Edmund A.; and Ringe, Stephen J., 4,372,603, Cl. 296-146.000.
Fuchs, Hermann; Kapaun, Gustav; and Meininger, Fritz, to Hoechst Aktiengesellschaft. Process for the preparation of 1-aminobenzene-5-β-sulfatoethylsulfone-2,4-disulfonic acid, the 5-vinylsulfone compound and the alkali salts thereof. 4,372,892, Cl. 260-458.00C.
Fuhri, William F. Portable easel device. 4,372,630, Cl. 312-231.000.
Fuini, Dennis L.: *See—*
Newton, Charles L.; and Fuini, Dennis L., 4,372,124, Cl. 60-648.000.
Fuji Jukogyo Kabushiki Kaisha: *See—*
Takizawa, Junichi; Kojima, Seiichiro; Satoh, Nobuo; and Nakazato, Eiji, 4,372,578, Cl. 280-802.000.
Fuji Photo Film Co., Ltd.: *See—*
Hara, Yoshio; and Shibata, Tadayoshi, 4,372,660, Cl. 354-180.000.
Fujii, Masahiko: *See—*
Yoshikumi, Chikao; Fujii, Takayoshi; Saito, Kenichi; Fujii, Masahiko; and Niimura, Koichi, 4,372,890, Cl. 260-429.00R.
Fujii, Takayoshi: *See—*
Yoshikumi, Chikao; Fujii, Takayoshi; Saito, Kenichi; Fujii, Masahiko; and Niimura, Koichi, 4,372,890, Cl. 260-429.00R.
Yoshikumi, Chikao; Hirose, Fumio; Ohmura, Yoshio; Fujii, Takayoshi; Ikuzawa, Masanori; Matsunaga, Kenichi; Ando, Takao; and Ohhara, Minoru, 4,372,948, Cl. 424-180.000.

Fujii, Takayuki; and Suda, Hitoshi, to Honda Giken Kogyo Kabushiki Kaisha. Vehicle instrument panel attaching structure. 4,372,412, Cl. 180-90.000.
Fujikura, Takashi: *See—*
Imai, Kazuo; Niigata, Kunihiro; Fujikura, Takashi; Hashimoto, Shinichi; and Takenaka, Toichi, 4,373,106, Cl. 564-85.000.
Fujioka, Futoshi: *See—*
Light, Kenneth K.; McGhie, Joseph A.; Fujioka, Futoshi; and Yoshida, Takao, 4,373,108, Cl. 568-817.000.
Fujioka, Yoshisato; and Kawamura, Atsushi, to Ricoh Company, Ltd. Telephoto zoom lens. 4,372,654, Cl. 350-427.000.
Fujisawa Pharmaceutical Co., Ltd.: *See—*
Takaya, Takao; Takasugi, Hisashi; Chiba, Toshiyuki; and Tsuji, Kiyoshi, 4,372,952, Cl. 424-246.000.
Fujita, Isao: *See—*
Sugiyama, Takeshi; Shirouchi, Shoji; Tsuchiya, Osamu; Onoda, Mamoru; Yamashita, Atsuko; Fujita, Isao; and Imanishi, Nobuyuki, 4,372,779, Cl. 75-0.50R.
Fujita, Yutaka: *See—*
Toriyama, Kazuhisa; Nakagomi, Tamihito; Sato, Hisato; Fujita, Yutaka; Morita, Katsuhiko; and Arai, Yoshi, 4,372,871, Cl. 252-299.610.
Fujitsu Limited: *See—*
Hanabusa, Takayoshi; Yamamoto, Kenji; Umemoto, Shinzi; Kurosawa, Keiji; and Yamashita, Mitsuo, 4,372,804, Cl. 156-631.000.
Isogai, Hideaki; and Tanaka, Miki, 4,373,196, Cl. 365-189.000.
Katsumata, Yutaka, 4,373,179, Cl. 364-200.000.
Toyoda, Kazuhiro; Ono, Chikai; and Hayashi, Toshio, 4,373,195, Cl. 365-154.000.
Watanabe, Yutaka; and Matsuo, Hisayasu, 4,373,019, Cl. 430-317.000.
Fulton, Theodore A.; and Hebard, Arthur F., to Bell Telephone Laboratories, Incorporated. Hybrid unlatching flip-flop logic element. 4,373,138, Cl. 307-277.000.
Funke, Craig D. Flue box assembly. 4,372,289, Cl. 126-292.000.
Furukawa, Junji; Furuno, Nobuo; Matsumura, Akira; and Kuwajima, Teruaki, to Nippon Paint Co., Ltd. Acetylene-conjugated diene polymerization. 4,373,074, Cl. 526-92.000.
Furuno, Nobuo: *See—*
Furukawa, Junji; Furuno, Nobuo; Matsumura, Akira; and Kuwajima, Teruaki, 4,373,074, Cl. 526-92.000.
Fushiki, Yasuo: *See—*
Oizumi, Masayuki; Uekita, Masakazu; Goto, Masana; Azumi, Ichiro; Uozumi, Shoji; Abe, Masaharu; Fushiki, Yasuo; Isshiki, Minoru; and Kawasaki, Kunio, 4,372,800, Cl. 156-307.300.
G. D. Societa' per Azioni: *See—*
Serganoli, Enzo, 4,372,326, Cl. 131-84.00B.
Gabbay, Kenneth; and Gallop, Paul M., to Children's Hospital Medical Center. Glycohemoglobin determination. 4,372,747, Cl. 436-67.000.
Galasso, Francis S.; and Veltri, Richard D., to United Technologies Corporation. Silicon carbide coated carbon fibers and composites. 4,373,006, Cl. 428-368.000.
Galindez, Luis, to Vidrierias de Llodio, S.A. Glass cutting system. 4,372,471, Cl. 225-1.000.
Galli, Guido: *See—*
Triplett, Baylor B.; Ferrando, Carlo; and Galli, Guido, 4,372,808, Cl. 156-655.000.
Galliher, Parrish M.: *See—*
Langer, Robert S.; Linhardt, Robert; Cooney, Charles L.; Galliher, Parrish M.; Flanagan, Margaret M.; and Klein, Michael D., 4,373,023, Cl. 435-2.000.
Gallop, Paul M.: *See—*
Gabbay, Kenneth; and Gallop, Paul M., 4,372,747, Cl. 436-67.000.
Galloway, Scott M.: *See—*
Harned, Frederich C.; and Galloway, Scott M., 4,372,476, Cl. 229-16.00A.
Gambro AB: *See—*
Larsson, Lars-Ake L.; Gullberg, Claes-Ake; Stenberg, Kaj; and Boberg, Nils G. E., 4,372,484, Cl. 494-14.000.
Gamundi, Reynold F., to Eaton Corporation. Mast structure. 4,372,426, Cl. 187-1.00R.
Ganguly, Ashit K.; Sarre, Olga; and Liu, Yi-Tsung, to Schering Corporation. Macrolide antibacterial AR-5 components. 4,373,095, Cl. 536-7.100.
Ganner, Peter; and Wallner, Theodor, to D. Swarovski & Co. Method of producing a multilayer anti-reflection coating. 4,372,987, Cl. 427-42.000.
Garcia, Alexander: *See—*
LaViolette, Paul A.; Caccioli, Anthony; Garcia, Alexander; Hotchkiss, Earl H.; and Marchitto, Alfred J., Jr., 4,372,016, Cl. 24-241.0PS.
Garcia, Francisco E., to Patentes FAC, S.A. Lock. 4,372,137, Cl. 70-41.000.
Gardiner, J. Brooke: *See—*
Elliott, Robert L.; Engel, Lawrence J.; and Gardiner, J. Brooke, 4,372,863, Cl. 252-51.50A.
Gardiner, Philip M. Cupel. 4,372,543, Cl. 266-275.000.
Gardner, Lloyd E., to Phillips Petroleum Company. Catalytic hydrocracking, hydrodesulfurization, and/or hydrodenitrogenation of organic compounds employing promoted zinc titanate and a zeolite as the catalytic agent. 4,372,842, Cl. 208-254.00H.
Garner, Billy J.: *See—*
Bobst, Robert W.; Garner, Billy J.; and Jacob, Frederick W., 4,372,758, Cl. 55-48.000.
Gaschler, Erich: *See—*
Hofbauer, Peter; Gaschler, Erich; and Schwarz, Cornelia, 4,372,257, Cl. 123-68.000.
Gassaway, Gary S.; Scott, William R.; and Runge, Richard J., to Chevron Research Company. Exploration system for enhancing the likelihood of predicting lithology of earth formations associated with deposits of ore, marker rock and/or economic minerals. 4,373,197, Cl. 367-36.000.
Gater, Arnold C., to Emhart Industries, Inc. Bayonet joint backset adjustment for latch constructions. 4,372,594, Cl. 292-337.000.
Gautier, Charlie V., Jr. Grommet. 4,372,013, Cl. 24-144.000.
Gauvain, Roger, to Societe Alsacienne de Constructions Mecaniques de Mulhouse. Apparatus for the automatic infeed of a textile fibre sheet into a coiler. 4,372,010, Cl. 19-159.00R.
Gavenonis, Thomas L.: *See—*
Shaffer, John W.; and Gavenonis, Thomas L., 4,372,210, Cl. 102-204.000.
Gaylard, Bernard: *See—*
Dey, Philip; Gaylard, Bernard; and Taylor, David A., 4,372,792, Cl. 156-48.000.
Gebruder Welger GmbH & Co. Kommanditgesellschaft: *See—*
Simonis, Jurgen; and Czok, Helmut, 4,372,104, Cl. 56-341.000.
Geisler, Thomas C., to Minnesota Mining and Manufacturing Company. Stabilizer for electron doner-acceptor carbonless copying systems. 4,372,582, Cl. 282-27.500.
Gelfer, Vadim: *See—*
Kaganovsy, Yaacov; Kustanovich, Yosef; Shmuter, Shimshon; Gelfer, Vadim; and Muchnik, Shimon, 4,372,818, Cl. 202-83.000.
General Clutch Corp.: *See—*
Waine, Martin; and Nisenson, Jules, 4,372,432, Cl. 192-8.00C.
General Dynamics Corporation/Convair Div.: *See—*
Bartholomew, Bruce J., 4,372,684, Cl. 356-348.000.
General Dynamics, Pomona Division: *See—*
Hagelberg, Allen C.; Allardt, Clark E.; Lobitz, Walter A.; Thornburg, Robert O.; Zimmerman, George F.; Letterman, Gary L.; and Helbron, John W., 4,372,239, Cl. 114-20.00A.
General Electric Company: *See—*
Abolins, Visvaldis; and Luxon, Bruce A., 4,373,052, Cl. 524-451.000.
Allen, Richard B., 4,373,040, Cl. 523-466.000.
Armijo, Joseph S.; and Coffin, Louis F., Jr., 4,372,817, Cl. 376-417.000.
Bennett, James G., Jr.; and Lee, Gim F., Jr., 4,373,064, Cl. 525-68.000.
Bower, Arnold B., Jr.; and Dillon, Robert E., 4,372,708, Cl. 405-261.000.
Bradley, Irving; and Vodicka, Vincent, 4,372,794, Cl. 156-73.100.
Ching, Ta-Yen, 4,373,060, Cl. 524-767.000.
Ching, Ta-Yen, 4,373,061, Cl. 524-767.000.
Chung, Rack H.; and Kray, William D., 4,372,835, Cl. 204-159.130.
Cohen, Stuart C.; and Dieck, Ronald L., 4,373,047, Cl. 524-371.000.
Cooper, Glenn D.; and Lee, Gim F., Jr., 4,373,045, Cl. 524-141.000.
Dickenson, Royston J., 4,372,125, Cl. 60-660.000.
Dieck, Ronald L.; and Kostelnik, Robert J., 4,373,067, Cl. 525-146.000.
Haaf, William R.; Katchman, Arthur; and Lee, Gim F., Jr., 4,373,055, Cl. 524-505.000.
Jackson, Joseph J., 4,372,789, Cl. 148-3.000.
Morton, James W., 4,372,029, Cl. 29-564.400.
Ritter, Allen M., 4,373,150, Cl. 318-336.000.
Stillman, Gordon B.; and White, Charles R., 4,372,597, Cl. 294-67.0DA.
Sugalski, Raymond K.; Leduc, Kenneth C.; and Morris, Jesse L., 4,373,129, Cl. 219-79.000.
General Foods Inc.: *See—*
Dolan, Francis H.; and Connor, Michael S., 4,372,734, Cl. 425-131.100.
General Motors Corporation: *See—*
Caruthers, John E.; Jay, Robert L.; Riffel, Ronald E.; and Rothrock, Mark D., 4,372,157, Cl. 73-147.000.
Ford, Harry S., Jr.; and Hamparian, Nshan, 4,372,120, Cl. 60-605.000.
Hyma, Marvin J., 4,372,575, Cl. 280-661.000.
Zaydel, Wieslaw S., 4,372,718, Cl. 411-366.000.
General Railway Signal Company: *See—*
Gomez, Jim H.; and Davila, Jose E., 4,372,478, Cl. 232-12.000.
General Signal Corporation: *See—*
Carlson, William L., Jr., 4,373,147, Cl. 318-48.000.
Genese, Joseph N.; and Muetterties, Andrew J., to Abbott Laboratories. Equipment sets having a combined air barrier and liquid sequencing device for the sequential administration of medical liquids at dual flow rates. 4,372,306, Cl. 128-214.00G.
Gennari, Federico: *See—*
Stramentinoli, Giorgio; and Gennari, Federico, 4,373,097, Cl. 536-26.000.
GEO Vann, Inc.: *See—*
Kinney, Charles W., 4,372,384, Cl. 166-278.000.
Germaine, Gilbert R.; and Darnanville, Jean P., to Shell Oil Company. Li-spinel catalyst for non-oxidative dehydrogenation process. 4,372,879, Cl. 252-470.000.
Gernhardt, Paul; Danguillier, Wilhelm; Peter, Karl; Grams, Wolfgang; Pohl, Siegfried; and Schnitzler, Peter, to Dr. C. Otto & Comp. G.m.b.H.; and Saarbergwerke Aktiengesellschaft, a part interest. Ignition system for coal gasifier. 4,372,754, Cl. 48-77.000.

Ghelardoni, Mario: *See—*
Pestellini, Vittorio; Ghelardoni, Mario; Giannotti, Danilo; Meli, Alberto; and Maggi, Carlo A., 4,372,958, Cl. 424-253.000.
Giaimo, Anthony: *See—*
Larsen, Robert H.; and Giaimo, Anthony, 4,372,502, Cl. 242-149.000.
Giannotti, Danilo: *See—*
Pestellini, Vittorio; Ghelardoni, Mario; Giannotti, Danilo; Meli, Alberto; and Maggi, Carlo A., 4,372,958, Cl. 424-253.000.
Gibbs, James W., to Gibbs-Ryder Materials Handling Systems, Inc. Material handling system. 4,372,219, Cl. 104-165.000.
Gibbs-Ryder Materials Handling Systems, Inc.: *See—*
Gibbs, James W., 4,372,219, Cl. 104-165.000.
Gibson, David V.; McKay, Garry M.; and Swalwell, John E. Dispersion process and product. 4,373,054, Cl. 524-460.000.
Gibson, David W.; Hale, Albert L.; Pope, Daniel L.; Rutledge, Donald R.; and Wells, Kirk P., to Bell Telephone Laboratories, Incorporated. Apparatus for adjusting cable tension. 4,372,535, Cl. 254-319.000.
Giersch, Wolfgang K.: *See—*
Ohloff, Gunther; and Giersch, Wolfgang K., 4,372,881, Cl. 252-522.00R.
Gigante, Joseph R., to United States of America, Navy. Method for etch thinning silicon devices. 4,372,803, Cl. 156-626.000.
Gilbertson, John R.; and Crout, Richard J., to University of Pittsburgh. Antibacterial agent and method. 4,372,978, Cl. 424-343.000.
Gilders, Ross D.: *See—*
Salter, Robert S.; Boorman, Roy S.; and Gilders, Ross D., 4,372,782, Cl. 75-118.00R.
Gillbrand, Per S.; Axelson, Simon E.; and Jiewertz, Sten R., to Saab-Scania Aktiebolag. Method of avoiding abnormal combination in an internal combination engine and an arrangement for carrying out the method. 4,372,119, Cl. 60-600.000.
Gilomen, Beat: *See—*
Uebelhart, Walter; Gilomen, Beat; and Parel, Claude, 4,372,108, Cl. 57-358.000.
Giordano, Anthony P.; and Mauer, Michael G., Jr. Conduit bending apparatus. 4,372,145, Cl. 72-387.000.
Globe Machine Manufacturing Company: *See—*
Steiling, Vigil, 4,372,357, Cl. 144-114.00R.
Glore, Thomas G., to Singer Company, The. Jointer-planer in-feed table. 4,372,358, Cl. 144-117.00R.
Glumac, Nick P. Mobile storage platform. 4,372,514, Cl. 248-163.00R.
Goans, Kip B., to Baker CAC, Inc. Valve actuating apparatus and method. 4,372,333, Cl. 137-1.000.
Gobel, Armin: *See—*
Patzschke, Hans-Peter; and Gobel, Armin, 4,373,059, Cl. 524-761.000.
Patzschke, Hans-Peter; and Gobel, Armin, 4,373,072, Cl. 525-438.000.
Godare, William L.: *See—*
Diehl, Robert J.; Godare, William L.; and Wells, Frederic D., 4,372,563, Cl. 277-117.000.
Goden, Kiyoshi: *See—*
Kodama, Yutaka; Oyama, Kaoru; Shimizu, Ryusaku; Nakabayashi, Masao; Nakashima, Yoshifumi; Sano, Takashi; Shibata, Masaaki; and Goden, Kiyoshi, 4,372,949, Cl. 424-199.000.
Godfrey, Andrew A.: *See—*
Hadler, Malcolm R.; Woodward, David R.; and Godfrey, Andrew A., 4,372,970, Cl. 424-282.000.
Goebel, Franz, to GTE Products Corporation. Method for assembling an electrochemical cell. 4,372,038, Cl. 29-623.200.
Goertzen, Gerold G.; and Herscher, Lee R., to Roper Corporation. Garden tiller with extended tine shield. 4,372,397, Cl. 172-42.000.
Goforth, Melvin L.; and Russell, Richard G. Electronic assembly process and apparatus. 4,372,475, Cl. 228-170.000.
Gogniat, Guy; and Grobois, Jacques, to Societe de Fabrication d'Instruments de Mesure (S.F.I.M.). Spherical indicators for aircraft. 4,372,160, Cl. 73-178.00R.
Gohring, Werner; and Luiten, Cornelius H., to Ipsen Industries International GmbH. Method and apparatus for the control of the carbon level of a gas mixture reacting in a furnace chamber. 4,372,790, Cl. 148-16.500.
Goldman, Alex: *See—*
Yu, Bu-Fan B.; and Goldman, Alex, 4,372,865, Cl. 252-62.620.
Goldman, Sidney M. Fishing tackle storage apparatus. 4,372,073, Cl. 43-57.100.
Gombocz, Karoly; Korbuly, Jozsef; Krampe, Geza; Szatmari, Jozsef; and Szoke, Karoly, to Kozponti Banyaszati Fejlesztesi Intezet. Process for measuring the tightness of endless driving means during operation. 4,372,172, Cl. 73-862.390.
Gomez, Jim H.; and Davila, Jose E., to General Railway Signal Company. Fare collection system and components thereof. 4,372,478, Cl. 232-12.000.
Gooch, Kendrick J.; Scharer, Hans R.; and Winter, William, to USM Corporation. Adjustable roller head extrusion die. 4,372,736, Cl. 425-149.000.
Good Earth Growers, Inc.: *See—*
Moore, Michael J.; and Studley, Charles F., Jr., 4,372,725, Cl. 414-460.000.
Goodall, Maurice, to Maurice Goodall (Holdings) Limited. Spray-inhibiting means for use on a road vehicle. 4,372,570, Cl. 280-154.50R.
Goodwin, John D., to Inventure, Inc. Insulation material. 4,373,005, Cl. 428-357.000.
Goodyear Aerospace Corporation: *See—*
Knaus, Ernest; Liggett, Paul E.; and Namsick, Raymond J., 4,372,533, Cl. 254-93.0HP.
Goodyear Tire & Rubber Company, The: *See—*
Kimball, Michael E.; and Randleman, Marvin T., 4,373,082, Cl. 528-60.000.
Gordon, Norman E.: *See—*
Sewell, James D.; and Gordon, Norman E., 4,372,717, Cl. 410-154.000.
Goring, Joachim E., to Beecham-Wulfing GmbH & Co. KG. 1-(5-Oxohexyl)-3-alkyl-7-(2-oxopropyl)xanthines. 4,372,959, Cl. 424-253.000.
Gorjunov, Georgy L.: *See—*
Surovikin, Vitaly F.; Rogov, Alexandr R.; Sazhin, Gennady V.; and Gorjunov, Georgy L., 4,372,936, Cl. 423-450.000.
Goto, Masana: *See—*
Oizumi, Masayuki; Uekita, Masakazu; Goto, Masana; Azumi, Ichiro; Uozumi, Shoji; Abe, Masaharu; Fushiki, Yasuo; Isshiki, Minoru; and Kawasaki, Kunio, 4,372,800, Cl. 156-307.300.
Gott Corporation: *See—*
Branscum, Tony E., 4,372,453, Cl. 215-13.00R.
Goudsche Machinefabriek B.V.: *See—*
Mann, Adriaan B., 4,372,153, Cl. 73-84.000.
Gould Inc.: *See—*
Halasz, Laszlo, 4,372,773, Cl. 65-108.000.
Gowin-Card, Inc.: *See—*
Maier, H. Armin, 4,372,001, Cl. 8-151.000.
Grab, Fred W.: *See—*
Pfannkuch, Robert B.; and Grab, Fred W., 4,373,156, Cl. 340-703.000.
Grace, Phillip F.; and Estes, Howard A., Jr. Magnetic card vote casting system. 4,373,134, Cl. 235-386.000.
Grafius, Gerald: *See—*
Notarione, Patrick D.; Turk, Ronald K.; and Grafius, Gerald, 4,372,463, Cl. 221-10.000.
Graham, Joseph: *See—*
Fritze, Gary D.; and Graham, Joseph, 4,372,997, Cl. 428-144.000.
Grain Processing Corporation: *See—*
Hubbard, E. Daniel; and Harvey, Richard D., 4,373,099, Cl. 536-105.000.
Grams, Wolfgang: *See—*
Gernhardt, Paul; Danguillier, Wilhelm; Peter, Karl; Grams, Wolfgang; Pohl, Siegfried; and Schnitzler, Peter, 4,372,754, Cl. 48-77.000.
Granges Nyby AB: *See—*
Aslund, Christer; Eriksson, Hans; and Tornberg, Claes, 4,373,012, Cl. 428-558.000.
Gratani, Francesco; Nelli, Giuseppe; Di Battista, Piero; and Cicchetti, Osvaldo, to Montedison S.p.A. N,N-Di-(hydroxy-phenyl) derivatives of piperazine and use thereof as stabilizers for polymers. 4,373,042, Cl. 524-100.000.
Graviner Limited: *See—*
Ball, David N., 4,373,136, Cl. 250-339.000.
Greci, John J.: *See—*
Bascom, Hollis H.; Matweyou, Stephen; Andersen, Alan J.; and Greci, John J., 4,372,801, Cl. 156-434.000.
Greenley, Gordon A.: *See—*
Haag, George A.; Fogg, O. Douglas; Greenley, Gordon A.; Shepard, Steve A.; and Terry, F. Duncan, 4,373,193, Cl. 364-900.000.
Greenville Steel Textile Machinery Corporation: *See—*
Heidan, Klaus, 4,372,135, Cl. 68-22.00R.
Greten, Berndt: *See—*
Wiemann, Dieter; Seeger, Gunter; and Greten, Berndt, 4,372,899, Cl. 264-25.000.
Greuel, Walter J., Jr., to Raychem Corporation. Method and apparatus for wrapping a tape around a pipe. 4,372,796, Cl. 156-187.000.
Grewal, Virinder; and Reindl, Werner, to Siemens Aktiengesellschaft. Method for manufacturing solderable, temperable, thin film tracks which do not contain precious metal. 4,372,809, Cl. 156-656.000.
Grieger, Robert G.: *See—*
Scapple, Robert Y.; Keister, Frank Z.; Grieger, Robert G.; and Himmel, Richard P., 4,372,037, Cl. 29-613.000.
Griffith, Oliver C. Identification device. 4,372,069, Cl. 40-490.000.
Grobois, Jacques: *See—*
Gogniat, Guy; and Grobois, Jacques, 4,372,160, Cl. 73-178.00R.
Grosse, Klaus: *See—*
Aurich, Horst; Bochmann, Brigitta; Grosse, Klaus; Kohler, Eberhard; Nestler, Michael; Ochsenfarth, Hans-Christian; and Seyfarth, Gerhard, 4,372,548, Cl. 271-18.300.
Grossmann, Frederic; and Sims, Larry A., to American Hospital Supply Corporation. Bandage frame and method. 4,372,303, Cl. 128-132.00D.
Grove, William C.: *See—*
Welch, Joseph J.; Grove, William C.; and Moran, Michael E., 4,372,517, Cl. 248-267.000.
Gruenenthal GmbH: *See—*
Seipp, Ulrich; Vollenberg, Werner; Mueller, Bernd; and Michel, Gudrun, 4,372,971, Cl. 424-285.000.
Grumman Aerospace Corporation: *See—*
Chin, Sze L., 4,373,140, Cl. 307-351.000.
GTE Automatic Electric Laboratories, Inc.: *See—*
Zucker, Joseph; and Fitch, Arthur H., 4,372,768, Cl. 65-4.210.
GTE Products Corporation: *See—*
Bonazoli, Robert P.; and Paget, Fredrick W., 4,373,146, Cl. 315-209.00R.
Goebel, Franz, 4,372,038, Cl. 29-623.200.
Shaffer, John W.; and Gavenonis, Thomas L., 4,372,210, Cl. 102-204.000.

Guala, Piergiacomo, to Angelo Guala S.p.A. Security closure for bottles. 4,372,456, Cl. 215-252.000.
Gude, Klaus E.; Felsvang, Karsten S.; and Coe, Everett L., to A/S Niro Atomizer; and Joy Manufacturing Company. Process for desulfurization, dedusting and discharge of hot fly ash-containing flue gas. 4,372,926, Cl. 423-244.000.
Guditz, Elis A.; and Burke, Robert L., to Massachusetts Institute of Technology. Method for metallizing aluminum pads of an integrated circuit chip. 4,372,996, Cl. 427-328.000.
Gulf Canada Limited: *See—*
Cymbalisty, Lubomyr M.; Maskwa, Alvin J.; Trevoy, Lloyd W.; and Wojno, Jan, 4,372,174, Cl. 73-863.110.
Gulf Oil Corporation: *See—*
Karim, Khalid A.; Lakshmanan, Pallavoor R.; and Rea, James H., 4,373,066, Cl. 525-133.000.
Gulf & Western Manufacturing Company: *See—*
LaViolette, Paul A.; Caccioli, Anthony; Garcia, Alexander; Hotchkiss, Earl H.; and Marchitto, Alfred J., Jr., 4,372,016, Cl. 24-241.0PS.
Gullberg, Claes-Ake: *See—*
Larsson, Lars-Ake L.; Gullberg, Claes-Ake; Stenberg, Kaj; and Boberg, Nils G. E., 4,372,484, Cl. 494-14.000.
Gulliksen, John E., to Koehler Manufacturing Company. Methods and apparatus for controlling reflected light. 4,373,178, Cl. 362-280.000.
Gundel, Janos: *See—*
Benko, Pal; Bozsing, Daniel; Gundel, Janos; and Magyar, Karoly, 4,373,100, Cl. 542-439.000.
Benko, Pal; Bozsing, Daniel; Gundel, Janos; and Magyar, Karoly, 4,373,101, Cl. 542-440.000.
Gunesin, Binnur; Hamed, Gary R.; Kang, Jung W.; and Schulz, Donald N., to Firestone Tire & Rubber Company, The. Thermally reversible copolymers and process for the preparation thereof. 4,373,068, Cl. 525-218.000.
Gunn, Dennis L. Method for making an ear plug. 4,372,904, Cl. 264-134.000.
Gunneman, Paul. Blowing nozzle having a shielded blowing aperture, adapted for use in a shuttleless weaving machine. 4,372,348, Cl. 139-435.000.
Gupta, Ramesh K., to Clarex Manufacturing Limited. Blended plastomeric and elastomeric rubber latex sponge. 4,373,033, Cl. 521-70.000.
Gustafson, Inc.: *See—*
Rushing, Kyle W., 4,372,080, Cl. 47-57.600.
Gustin, Pol A. G. J.; and Schayes, Raymond G. G., to U.S. Philips Corporation. Method of manufacturing electrostatic write head. 4,372,045, Cl. 29-846.000.
Gutz, Kenneth H., to United States of America, Navy. Rotating electric machine having a toroidal wound motor winding. 4,373,148, Cl. 318-254.000.
Gyogyszerkutato Intezet: *See—*
Ambrus, Gabor; Toth-Sarudy, Eva; Cseh, Gyorgy; Barta, Istvan; and Horvath, Gyula, 4,372,973, Cl. 424-305.000.
H. & P. Kaas System Teknik ApS: *See—*
Kaas, Povl, 4,372,860, Cl. 210-748.000.
Haaf, William R.; Katchman, Arthur; and Lee, Gim F., Jr., to General Electric Company. Impact resistant polyphenylene ether resin compositions containing radial teleblock copolymers. 4,373,055, Cl. 524-505.000.
Haag, George A.; Fogg, O. Douglas; Greenley, Gordon A.; Shepard, Steve A.; and Terry, F. Duncan, to Hewlett-Packard Company. Logic state analyzer. 4,373,193, Cl. 364-900.000.
Haage, Hans-Jurgen: *See—*
Disteldorf, Josef; Hubel, Werner; Brandt, Siegfried; and Haage, Hans-Jurgen, 4,373,088, Cl. 528-338.000.
Haas, Franz: *See—*
Hildebrand, Dietrich; and Haas, Franz, 4,372,744, Cl. 8-400.000.
Haasl, Michael J.; Snider, Kenneth D.; and Murphy, William L., to Pillsbury Company, The. Refrigerated shelf stable dough. 4,372,982, Cl. 426-549.000.
Habenstein, Klaus, to Behringwerke Aktiengesellschaft. Agent for detecting peroxidatively active substances and the use of a polyvinylmethylacylamide in such an agent. 4,372,746, Cl. 436-66.000.
Hachenberg, Horst: *See—*
Wunder, Friedrich; Leupold, Ernst I.; Hachenberg, Horst; Schmidt, Hans-Joachim; and Unger, Klaus, 4,372,878, Cl. 252-455.00Z.
Hadler, Malcolm R.; Woodward, David R.; and Godfrey, Andrew A., to Shell Internationale Research Maatschappij B.V. Benzofuran acetic acid esters and their arthropocidal compositions. 4,372,970, Cl. 424-282.000.
Haehnel, Rudolf H.: *See—*
Iannucci, Vincent A.; and Haehnel, Rudolf H., 4,372,191, Cl. 87-48.000.
Hagelberg, Allen C.; Allardt, Clark E.; Lobitz, Walter A.; Thornburg, Robert O.; Zimmerman, George F.; Letterman, Gary L.; and Helbron, John W., to General Dynamics, Pomona Division. Undersea weapon with hydropulse system and periodical seawater admission. 4,372,239, Cl. 114-20.00A.
Hagiwara, Miyuki; and Morita, Yousuke, to Japan Atomic Energy Research Institute. Flame-retardant and radiation-resistant polymer composition and a resin molded product prepared therefrom. 4,373,046, Cl. 524-285.000.
Haig, Frederic D. Synthetic plastics coating. 4,372,994, Cl. 427-195.000.
Hair Free Centers: *See—*
Shapiro, Julius; and Eliason, Andrew, 4,372,315, Cl. 128-303.180.
Hakansson, Jan T.: *See—*
Dilot, Rolf M.; and Hakansson, Jan T., 4,372,797, Cl. 156-249.000.
Halasz, Laszlo, to Gould Inc. Method for making ink jet writing devices. 4,372,773, Cl. 65-108.000.
Halbach & Braun: *See—*
Braun, Gert, 4,372,619, Cl. 299-43.000.
Halcon SD Group, Inc., The: *See—*
Rizkalla, Nabil, 4,372,889, Cl. 260-413.000.
Hale, Albert L.: *See—*
Gibson, David W.; Hale, Albert L.; Pope, Daniel L.; Rutledge, Donald R.; and Wells, Kirk P., 4,372,535, Cl. 254-319.000.
Hale, John M.; and Weber, Eugen, to Orbisphere Corporation Wilmington. Device for mounting and securing a membrane on an amperometric cell. 4,372,021, Cl. 29-235.000.
Hale, Peter: *See—*
Koster, Robertus J. C.; Six, Volker; and Hale, Peter, 4,372,882, Cl. 252-529.000.
Hall, Glenn E.: *See—*
Anderson, Robert J.; and Hall, Glenn E., 4,372,053, Cl. 34-11.000.
Hall, Lowell R., to Caterpillar Tractor Co. System with constant force actuator. 4,372,193, Cl. 91-420.000.
Hall, Wilbur S.: *See—*
Steinbrecher, Lester; and Hall, Wilbur S., 4,373,050, Cl. 524-405.000.
Halliburton Company: *See—*
Barrington, Burchus Q.; Clayton, Wilbur P.; and Jackson, Gerald D., 4,372,391, Cl. 166-373.000.
Barrington, Burchus Q.; and Clayton, Wilbur P., 4,372,392, Cl. 166-373.000.
Brandell, John T., 4,372,387, Cl. 166-334.000.
Carter, Ernest E., Jr., 4,372,562, Cl. 277-34.000.
Knox, Lloyd C., 4,372,704, Cl. 405-225.000.
Skinner, Neal G., 4,372,388, Cl. 166-334.000.
Halon, Bernard: *See—*
Vossen, John L., Jr.; and Halon, Bernard, 4,372,807, Cl. 156-643.000.
Hamamura, Hideki: *See—*
Takahashi, Masaaki; and Hamamura, Hideki, 4,372,805, Cl. 156-642.000.
Hamed, Gary R.: *See—*
Gunesin, Binnur; Hamed, Gary R.; Kang, Jung W.; and Schulz, Donald N., 4,373,068, Cl. 525-218.000.
Hammett, Dillard S., to SEDCO, Inc. Stab water supply system. 4,372,395, Cl. 169-69.000.
Hammond, James A., to Colamco, Inc. Process for making curable adhesive polyurethane products. 4,373,057, Cl. 524-700.000.
Hamparian, Nshan: *See—*
Ford, Harry S., Jr.; and Hamparian, Nshan, 4,372,120, Cl. 60-605.000.
Hamrick, Joseph T.; and Rose, Leslie C., to Well-Pack Systems, Inc. Downhole water pump and method of use. 4,372,389, Cl. 166-369.000.
Hanabusa, Takayoshi; Yamamoto, Kenji; Umemoto, Shinzi; Kurosawa, Keiji; and Yamashita, Mitsuo, to Fujitsu Limited. Method for making multilayer printed wiring board. 4,372,804, Cl. 156-631.000.
Hanlon, Albert W., to Admore, Inc. Display. 4,372,086, Cl. 52-36.000.
Hannula, Rodney R.: *See—*
Brochman, Wilfred R.; Hannula, Rodney R.; and Jorgensen, Bradley H., 4,372,460, Cl. 220-258.000.
Hansen, Glen D.: *See—*
Buschbom, Floyd E.; Henke, Donald L.; and Hansen, Glen D., 4,372,729, Cl. 414-700.000.
Hansen, Guenter: *See—*
Eilingsfeld, Heinz; Hansen, Guenter; Seybold, Guenther; and Zeidler, Georg, 4,372,885, Cl. 260-158.000.
Hanson, Paul A.; Hightower, John D.; and Strickland, Alvah T., to United States of America, Navy. Method for deployment of a towed array from a swath ship. 4,372,359, Cl. 114-244.000.
Hansson, Gunnar C., to Atlas Copco Aktiebolag. Pneumatic hoist. 4,372,534, Cl. 254-269.000.
Hantke, Hans-Jurgen: *See—*
von der Decken, Claus-Benedict; Hantke, Hans-Jurgen; and Sturmer, Walter, 4,372,912, Cl. 376-381.000.
Hara, Yoshio; and Shibata, Tadayoshi, to Fuji Photo Film Co., Ltd. Film unit containing pack. 4,372,660, Cl. 354-180.000.
Harbor Tool Mfg. Inc.: *See—*
Stratta, Peter J.; Stratta, John G.; and Camp, Douglas M., 4,372,006, Cl. 16-105.000.
Harigane, Kotaro; Takahashi, Kenichi; Shudo, Hirokazu; and Tando, Shuichi, to Tokyo Denki Kagaku Kogyo Kabushiki Kaisha. Apparatus for mounting chip type circuit elements on printed circuit boards. 4,372,802, Cl. 156-538.000.
Harjar, Martin J.; and Noss, Jeffrey S., to Nordson Corporation. Apparatus for calibrating link position transducers of a teaching robot and a work robot. 4,372,721, Cl. 414-5.000.
Harkins, Samuel J., to Tyco Industries, Inc. Apparatus for coupling and uncoupling toy tractors and semitrailers. 4,372,075, Cl. 46-1.00K.
Harned, Frederich C.; and Galloway, Scott M., to Continental Group, Inc., The. Self-locking tray with integral divider. 4,372,476, Cl. 229-16.00A.
Harper, Peter W., to Bendix Corporation, The. Quadrature trigger system for sequential fuel injection. 4,372,273, Cl. 123-490.000.
Harrison, William E., to Interco Incorporated. Thread cutting device for sewing machine. 4,372,236, Cl. 112-291.000.
Hart, Douglas G., to High-Speed Spinning, Inc. False twist device. 4,372,107, Cl. 57-346.000.

Harte, Bruce D.: *See—*
Fette, Bruce A.; Harte, Bruce D.; and Tennyson, Bill E., 4,373,191, Cl. 364-724.000.
Hartl, Gerhard: *See—*
Schonthaler, Karl; and Hartl, Gerhard, 4,372,488, Cl. 238-8.000.
Hartmann & Braun Aktiengesellschaft: *See—*
Fabinski, Walter; Deptolla, Udo; and Ascherfeld, Margareta, 4,373,137, Cl. 250-343.000.
Harvey, Richard D.: *See—*
Hubbard, E. Daniel; and Harvey, Richard D., 4,373,099, Cl. 536-105.000.
Harvey, Robert P., to McGuire-Nicholas Manufacturing Company. Tool holder. 4,372,468, Cl. 224-268.000.
Hasegawa, Taiji: *See—*
Ishii, Toshio; Mouri, Yasunori; Abe, Osamu; and Hasegawa, Taiji, 4,373,187, Cl. 364-431.060.
Hashimoto, Shinichi: *See—*
Imai, Kazuo; Niigata, Kunihiro; Fujikura, Takashi; Hashimoto, Shinichi; and Takenaka, Toichi, 4,373,106, Cl. 564-85.000.
Haskett, Thomas E.; and Schmitt, Joseph J., to Minnesota Mining and Manufacturing Company. EDM Electrodes. 4,373,127, Cl. 219-69.00E.
Hass, Robert H., to Union Oil Company of California. Process for removing SO_x and NO_x compounds from gas streams. 4,372,932, Cl. 423-351.000.
Hatfield, Frederick C. Weight lifting device and method of exercising. 4,372,553, Cl. 272-119.000.
Hatzikelis, Christopher; Madonia, Ciro; and Cosentino, Cesare C. Pliable edge protector. 4,372,083, Cl. 49-462.000.
Haugeneder, Hans; and Panzhauser, Erich. Casing for building works. 4,372,373, Cl. 165-54.000.
Haukelt, Helmut: *See—*
Ehlers, Joern; and Haukelt, Helmut, 4,372,866, Cl. 252-70.000.
Hauni-Werke Korber & Co. KG: *See—*
Kasparek, Alois; and Burger, Jurgen, 4,372,710, Cl. 406-28.000.
Hayashi, Torahiko. Apparatus for adjusting intervals of objects being conveyed. 4,372,438, Cl. 198-459.000.
Hayashi, Toshio: *See—*
Toyoda, Kazuhiro; Ono, Chikai; and Hayashi, Toshio, 4,373,195, Cl. 365-154.000.
Haynes, Herbert E., Jr.: *See—*
Dufresne, Raymond A., 4,372,636, Cl. 339-237.000.
Hazen, Gretz L., to Dec International, Inc. Method of making cheese. 4,372,983, Cl. 426-582.000.
Heasley, Raymond E.: *See—*
Anderson, Harry E.; and Heasley, Raymond E., 4,372,020, Cl. 29-81.00H.
Heat and Control, Inc.: *See—*
Caridis, Andrew A.; Benson, Clark K.; and Caridis, Anthony A., 4,372,200, Cl. 99-404.000.
Heat Power Products Corporation: *See—*
Sebald, Joseph F., deceased, 4,372,126, Cl. 60-669.000.
Hebard, Arthur F.: *See—*
Fulton, Theodore A.; and Hebard, Arthur F., 4,373,138, Cl. 307-277.000.
Heckele, Helmut, to Richard Wolf GmbH. Endoscopes. 4,372,295, Cl. 128-4.000.
Hecken, Rudolf P., to Bell Telephone Laboratories, Incorporated. Space diversity signal combiner. 4,373,207, Cl. 455-139.000.
Heckethorn, John E., to Heckethorn Manufacturing Co. U-Bolt exhaust system clamp with double saddle. 4,372,017, Cl. 24-277.000.
Heckethorn Manufacturing Co.: *See—*
Heckethorn, John E., 4,372,017, Cl. 24-277.000.
HEF Technische Entwicklung GmbH & Co. KG: *See—*
Janke, Bernhard, 4,372,084, Cl. 49-477.000.
Hefftler, Victor: *See—*
Jentzsch, Arndt; Johne, Hans; Hefftler, Victor; Kuhnert, Werner; and Karl, Reiner, 4,372,209, Cl. 101-409.000.
Heidan, Klaus, to Greenville Steel Textile Machinery Corporation. Horizontal washer apparatus. 4,372,135, Cl. 68-22.00R.
Helbron, John W.: *See—*
Hagelberg, Allen C.; Allardt, Clark E.; Lobitz, Walter A.; Thornburg, Robert O.; Zimmerman, George F.; Letterman, Gary L.; and Helbron, John W., 4,372,239, Cl. 114-20.00A.
Helgorsky, Jacques; and Leveque, Alain, to Rhone-Poulenc Industries. Purification of solutions of gallium values by liquid/liquid extraction. 4,372,923, Cl. 423-112.000.
Helgstrand, Ake J. E.; Johannson, Karl N.; Misiorny, Alfons; Noren, Jan O.; and Stening, Goran, to Astra Lakemedel Aktiebolag. Phosphonoformic acid esters. 4,372,894, Cl. 260-941.000.
Helms, Horace H.: *See—*
Rozner, Alexander G.; and Helms, Horace H., 4,372,213, Cl. 102-301.000.
Hemco Wire Products, Inc.: *See—*
Myers, John W., 4,372,351, Cl. 140-112.000.
Hemmi, Keizi: *See—*
Kitamori, Nobuyuki; Hemmi, Keizi; and Maeno, Masaya, 4,372,968, Cl. 424-280.000.
Henderson, Donald L. Insulating and draft preventing automatic shutter for attic and other exhaust type fans. 4,372,196, Cl. 98-116.000.
Henke, Donald L.: *See—*
Buschbom, Floyd E.; Henke, Donald L.; and Hansen, Glen D., 4,372,729, Cl. 414-700.000.
Henkel Kommanditgesellschaft auf Aktien: *See—*
Saran, Herbert; Witthaus, Martin; Smulders, Eduard; and Schwadtke, Karl, 4,372,868, Cl. 252-102.000.
Upadek, Horst; and Bruns, Klaus, 4,372,880, Cl. 252-522.00R.
Henney, John W.: *See—*
Denton, Ivor E.; and Henney, John W., 4,372,902, Cl. 264-65.000.
Henry, Arnold W.: *See—*
Azar, Jack C.; Henry, Arnold W.; and Ferguson, Robert M., 4,372,246, Cl. 118-60.000.
Henthorn, Marcus D. Runner planter means. 4,372,229, Cl. 111-86.000.
Her Majesty the Queen in right of the Province of Alberta, Government of the Province of Alberta, Department of Energy and Natural Resources, Alberta Syncrude Equity: *See—*
Cymbalisty, Lubomyr M.; Maskwa, Alvin J.; Trevoy, Lloyd W.; and Wojno, Jan, 4,372,174, Cl. 73-863.110.
Herberts Gesellschaft mit Beschrankter Haftung: *See—*
Patzschke, Hans-Peter; and Gobel, Armin, 4,373,059, Cl. 524-761.000.
Patzschke, Hans-Peter; and Gobel, Armin, 4,373,072, Cl. 525-438.000.
Herbst, Wayne R., to Teletype Corporation. Method and means of reading punched data tape. 4,373,114, Cl. 178-17.00D.
Herdzina, Frank J.; Kossmann, Hans; and Lemke, Harold C., to American Can Company. Forming of end closures. 4,372,720, Cl. 413-56.000.
Herfeld, Friedrich W. Double-cone rotating mixer. 4,372,686, Cl. 366-220.000.
Herkert, Claus-Michael: *See—*
Brunsch, Klaus; Herkert, Claus-Michael; and Thomamueller, Dieter, 4,372,795, Cl. 156-155.000.
Herlow, Erik: *See—*
Daenen, Robert H. C. M.; and Herlow, Erik, 4,372,526, Cl. 249-119.000.
Hermann, Kurt: *See—*
Wojtech, Bernhard; Kiessling, Hans-Joachim; Becker, Wilhelm; and Hermann, Kurt, 4,373,073, Cl. 525-507.000.
Herold, Georg; and Kabs, Hermann, to Siemens Aktiengesellschaft. Method for manufacturing plastic electrical insulators. 4,372,907, Cl. 264-265.000.
Herrmann, Fred. Tape dispenser. 4,372,472, Cl. 225-80.000.
Herrold, Anne M., to Eli Lilly and Company. Cosmetic cream formulation. 4,372,944, Cl. 424-83.000.
Herscher, Lee R.: *See—*
Goertzen, Gerold G.; and Herscher, Lee R., 4,372,397, Cl. 172-42.000.
Herve, Paul: *See—*
Tison, Eric; and Herve, Paul, 4,372,206, Cl. 101-228.000.
Herz, Andre M., to Minigrip, Inc. Method of joining flexible fastener strips to flexible web. 4,372,793, Cl. 156-66.000.
Herzan, Georg; and Simeth, Claus, to M.A.N.-ROLAND Druckmaschinen Aktiengesellschaft. Lithographic sheet fed press having means for clearing a jamming condition. 4,372,204, Cl. 101-145.000.
Hess, Paul D., to Allis-Chalmers Corporation. Method for heat treating pulverous raw material calcining combustor therefor. 4,372,784, Cl. 106-100.000.
Hess, Peter: *See—*
Rampel, Hans; Hess, Peter; and Schulz, Volkmar, 4,372,521, Cl. 248-430.000.
Hewlett-Packard Company: *See—*
Haag, George A.; Fogg, O. Douglas; Greenley, Gordon A.; Shepard, Steve A.; and Terry, F. Duncan, 4,373,193, Cl. 364-900.000.
Rockwell, Martin G., 4,372,324, Cl. 128-695.000.
Hi-Life Rubber, Inc.: *See—*
Larson, Leigh R., 4,372,250, Cl. 119-14.470.
Hibbel, Josef; Schleper, Bernard; and Scheve, Heinrich, to Ruhrchemie Aktiengesellschaft. Radiation boiler. 4,372,253, Cl. 122-7.00R.
Hicks, John W., Jr. Multi-fiber fiber-optic assembly method. 4,372,769, Cl. 65-4.210.
Higashide, Eiji; Tanida, Seiichi; Muroi, Masayuki; and Asai, Mitsuko, to Takeda Chemical Industries, Ltd. Culture of Nocardia ATCC 31309. 4,373,028, Cl. 435-253.000.
High-Speed Spinning, Inc.: *See—*
Hart, Douglas G., 4,372,107, Cl. 57-346.000.
Hightower, John D.: *See—*
Hanson, Paul A.; Hightower, John D.; and Strickland, Alvah T., 4,372,359, Cl. 114-244.000.
Hilbert, Lloyd E.; and Samples, Randall H. Method of recovering pure toluene diisocyanate from a polymeric residue product. 4,372,891, Cl. 260-453.0SP.
Hildebrand, Dietrich; and Haas, Franz, to Bayer Aktiengesellschaft. Process for dyeing cellulose materials with reactive dyestuffs by the exhaustion method. 4,372,744, Cl. 8-400.000.
Hildebrandt, Edmund. Hydraulic heat generator. 4,372,254, Cl. 122-26.000.
Himmel, Richard P.: *See—*
Scapple, Robert Y.; Keister, Frank Z.; Grieger, Robert G.; and Himmel, Richard P., 4,372,037, Cl. 29-613.000.
Hinden, Milton, to Duro Dyne Corporation. Retractable damper bearing assembly. 4,372,627, Cl. 384-260.000.
Hinrichs, Carl B.: *See—*
Propst, Paul L.; Richardson, Donald A.; and Hinrichs, Carl B., 4,372,629, Cl. 312-223.000.
Hirano, Reiji: *See—*
Matsumura, Isao; Ishikawa, Yasuyuki; Maruyama, Shigeo; Hirano, Reiji; and Kohayakawa, Yoshimi, 4,372,655, Cl. 351-206.000.
Hirose, Fumio: *See—*
Yoshikumi, Chikao; Hirose, Fumio; Ohmura, Yoshio; Fujii, Takayoshi; Ikuzawa, Masanori; Matsunaga, Kenichi; Ando, Takao; and Ohhara, Minoru, 4,372,948, Cl. 424-180.000.

Hitachi Kyowa Kogyo, Ltd.: *See—*
Sugimoto, Yoshikazu; Shirosaki, Kiyotaka; Kawaguchi, Masashi; and Takeshima, Masaki, 4,372,859, Cl. 210-739.000.
Hitachi, Ltd.: *See—*
Ishii, Toshio; Mouri, Yasunori; Abe, Osamu; and Hasegawa, Taiji, 4,373,187, Cl. 364-431.060.
Matsumura, Akira, 4,373,161, Cl. 343-717.000.
Sugimoto, Yoshikazu; Shirosaki, Kiyotaka; Kawaguchi, Masashi; and Takeshima, Masaki, 4,372,859, Cl. 210-739.000.
Toriyama, Kazuhisa; Nakagomi, Tamihito; Sato, Hisato; Fujita, Yutaka; Morita, Katsuhiko; and Arai, Yoshi, 4,372,871, Cl. 252-299.610.
Hiyama, Yasuhiro; Oshizawa, Hidekazu; Okamoto, Kenji; and Kobayashi, Masayoshi, to Diesel Kiki Co. Ltd. Fuel injection apparatus for internal combustion engines. 4,372,266, Cl. 123-357.000.
Hjelmeland, Leonard M., to United States of America, Health & Human Services. Nondenaturing zwitterionic detergents. 4,372,888, Cl. 260-397.100.
Hoechst Aktiengesellschaft: *See—*
Fuchs, Hermann; Kapaun, Gustav; and Meininger, Fritz, 4,372,892, Cl. 260-458.00C.
Ritz, Jurgen; Fischer, Hannes; and Plum, Helmut, 4,373,078, Cl. 526-317.000.
Wojtech, Bernhard; Kiessling, Hans-Joachim; Becker, Wilhelm; and Hermann, Kurt, 4,373,073, Cl. 525-507.000.
Wunder, Friedrich; Leupold, Ernst I.; Hachenberg, Horst; Schmidt, Hans-Joachim; and Unger, Klaus, 4,372,878, Cl. 252-455.00Z.
Hoelzen, Warren R.; Prescott, John F.; and Tyler, Michael N., to United States of America, Navy. Composite safe and arming mechanism for guided missile. 4,372,212, Cl. 102-264.000.
Hofbauer, Peter; Gaschler, Erich; and Schwarz, Cornelia, to Volkswagenwerk AG. Drive aggregate for a heat pump. 4,372,257, Cl. 123-68.000.
Hoffman, Arnold; and Engelstein, Shmuel, to Hoffman, Arnold. Method and apparatus for producing a high speed high resolution radiation sensitive article and a high speed high resolution radiation sensitive article. 4,373,022, Cl. 430-434.000.
Hoffmann, Gerhart: *See—*
Bunger, Heinrich; Cordes, Rudolf; and Hoffmann, Gerhart, 4,372,875, Cl. 252-413.000.
Hogue, Utah. Framing layout method and device. 4,372,049, Cl. 33-36.000.
Holdsworth, Alan S., to McCorquodale Machine Systems Limited. Stitching assembly. 4,372,473, Cl. 227-3.000.
Holehouse, Joseph G.: *See—*
Kyung, Jai H.; and Holehouse, Joseph G., 4,372,933, Cl. 423-365.000.
Hollister, Charles W. High pressure oil/gas fired closed loop furnace. 4,372,487, Cl. 237-56.000.
Holm, Ronald T.: *See—*
Singer, Arnold H.; and Holm, Ronald T., 4,372,642, Cl. 350-96.120.
Holpuch, Vladimir: *See—*
Landa, Vaclav; Vitek, Jaromir; Nejedly, Pavel; Holpuch, Vladimir; Bubelis, Juozas; and Stepanovicius, Atanas-Nemezyus, 4,372,826, Cl. 204-43.00T.
Holz, George E.; and Tezucar, Okan K., to Burroughs Corporation. System for operating a display panel. 4,373,157, Cl. 340-805.000.
Holzenberger, Kurt, to Klein, Schanzlin & Becker Aktiengesellschaft. Rotary distributor valve. 4,372,337, Cl. 137-240.000.
Honda Giken Kogyo Kabushiki Kaisha: *See—*
Fujii, Takayuki; and Suda, Hitoshi, 4,372,412, Cl. 180-90.000.
Osada, Isao; and Sano, Shoichi, 4,372,365, Cl. 152-158.000.
Otobe, Yutaka; and Kawamoto, Michio, 4,372,277, Cl. 123-571.000.
Tsuchiya, Toshio; Enokimoto, Akito; Mizushima, Sadao; and Takano, Suwaji, 4,372,602, Cl. 296-78.00R.
Watanabe, Masaki; and Wakatsuki, Goroei, 4,372,415, Cl. 180-215.000.
Yamamoto, Hitoshi; Watanabe, Masaki; and Shido, Nobuhiro, 4,372,417, Cl. 180-215.000.
Honda, Satoru: *See—*
Sunaga, Yoshimitsu; and Honda, Satoru, 4,373,170, Cl. 360-71.000.
Hondo, Tadahiro: *See—*
Kaneda, Takaho; Ishikawa, Seiji; Daimon, Hiroshi; Katsura, Toshio; Hondo, Tadahiro; and Ueda, Masahiro, 4,373,087, Cl. 528-337.000.
Honeywell Inc.: *See—*
Bohan, John E., Jr., 4,373,201, Cl. 371-68.000.
Mykkanen, C. Fred, 4,373,175, Cl. 361-220.000.
Honeywell Information Systems Inc.: *See—*
Jacobsthal, Herbert K., 4,373,152, Cl. 340-347.0DD.
Horak, Richard F.: *See—*
Bennett, Benjamin R.; McBee, Leroy D.; and Horak, Richard F., 4,372,129, Cl. 62-175.000.
Horaud, Florian: *See—*
Berneman, Armand; David, Alain; Horaud, Florian; and Segard, Emile, 4,373,027, Cl. 435-240.000.
Horey, Leonard I.: *See—*
Dunn, William H.; and Horey, Leonard I., 4,372,232, Cl. 112-158.00E.
Hori, Masao: *See—*
Asai, Yoshihiko; Hori, Masao; and Tokumitsu, Naoki, 4,373,128, Cl. 219-73.110.
Horner, Ellwood J., to American Hoechst Corporation. Precision planar positioning device. 4,372,677, Cl. 355-41.000.
Horowitz, Jeffrey S.: *See—*
Nelson, Paul A.; and Horowitz, Jeffrey S., 4,372,376, Cl. 165-104.120.
Horton, Lowell C., to Hosner, Joe G. Polymer concrete comprising furfuryl alcohol resin. 4,373,058, Cl. 524-705.000.
Horvath, Gyula: *See—*
Ambrus, Gabor; Toth-Sarudy, Eva; Cseh, Gyorgy; Barta, Istvan; and Horvath, Gyula, 4,372,973, Cl. 424-305.000.
Hosner, Joe G.: *See—*
Horton, Lowell C., 4,373,058, Cl. 524-705.000.
Hosoe, Mamoru: *See—*
Ichinomiya, Tsutomu; Hosoe, Mamoru; Nagayama, Masayoshi; Chousa, Hirotaka; and Kimura, Rokusaburo, 4,372,319, Cl. 128-421.000.
Hosonaga, Taketoshi: *See—*
Mizushima, Yoichi; and Hosonaga, Taketoshi, 4,372,607, Cl. 297-325.000.
Hotchkiss, Earl H.: *See—*
LaViolette, Paul A.; Caccioli, Anthony; Garcia, Alexander; Hotchkiss, Earl H.; and Marchitto, Alfred J., Jr., 4,372,016, Cl. 24-241.0PS.
Hotta, Mitsuhiko, to Kabushiki Kaisha Morita Seisakusho. Treatment chair. 4,372,608, Cl. 297-361.000.
Houdard, Jean-Pierre; Julie, Jean-Jacques; and Leoni, Bernard G., to Le Materiel Telephonique Thomson-CSF. Stochastic demodulator for phase jump-modulated signals, operating in time divided up over several channels. 4,373,151, Cl. 329-104.000.
Howarth, Thomas T.; and Hunt, Eric, to Beecham Group Limited. Clavulanic acid derivatives their preparation and use. 4,372,946, Cl. 424-114.000.
Hoya Lens Corporation: *See—*
Tarumi, Niro; Sugimura, Mitsuo; Komiya, Shigeo; and Tsuchiya, Makoto, 4,373,076, Cl. 526-261.000.
Hsieh, Jaw J., to Massachusetts Institute of Technology. Method for fabricating DH lasers. 4,372,791, Cl. 148-171.000.
Hubbard, E. Daniel; and Harvey, Richard D., to Grain Processing Corporation. Continuous process for preparation of a thinned cationic starch paste. 4,373,099, Cl. 536-105.000.
Hubbard, Vance M.; and Brunson, Welton K., to Tecnol, Inc. Arm sling. 4,372,301, Cl. 128-94.000.
Hubel, Werner: *See—*
Disteldorf, Josef; Hubel, Werner; Brandt, Siegfried; and Haage, Hans-Jurgen, 4,373,088, Cl. 528-338.000.
Hubner, Heinz-Joachim: *See—*
Schmitt, Werner; Purrmann, Robert; Jochum, Peter; and Hubner, Heinz-Joachim, 4,372,836, Cl. 204-159.230.
Hudson, Robert J.: *See—*
Dowding, John G.; Turner, Peter R.; and Hudson, Robert J., 4,373,188, Cl. 364-552.000.
Hudson's Bay Oil and Gas Company Limited: *See—*
Cymbalisty, Lubomyr M.; Maskwa, Alvin J.; Trevoy, Lloyd W.; and Wojno, Jan, 4,372,174, Cl. 73-863.110.
Hughes Aircraft Company: *See—*
Johnson, Kenneth C., 4,372,639, Cl. 350-3.700.
Scapple, Robert Y.; Keister, Frank Z.; Grieger, Robert G.; and Himmel, Richard P., 4,372,037, Cl. 29-613.000.
Hughes, George F., to Diamagnetics, Inc. Method for manufacturing diamond pick-up stylus. 4,372,042, Cl. 29-825.000.
Hughes, Nathaniel, to Vortech Sciences, Inc. Vortex generating mass flowmeter. 4,372,169, Cl. 73-861.520.
Hughes Tool Company: *See—*
Baugh, John L.; Montgomery, James W.; and Roach, Malcolm B., 4,372,390, Cl. 166-373.000.
Humanicare International Inc.: *See—*
Fowler, George B., 4,372,309, Cl. 128-284.000.
Hung, Chi C. Five-smoke-flue type wet water box boiler. 4,372,255, Cl. 122-149.000.
Hunt, Eric: *See—*
Howarth, Thomas T.; and Hunt, Eric, 4,372,946, Cl. 424-114.000.
Hunt, Harold R., to Phillips Petroleum Company. Apparatus useful for foam breaking. 4,373,024, Cl. 435-41.000.
Hunter, Alex B.: *See—*
Pinson, George T.; and Hunter, Alex B., 4,372,216, Cl. 102-489.000.
Hunter, Raymond. Shower bath economizer. 4,372,372, Cl. 165-47.000.
Huntoon, Francis E., to Teletype Corporation. Apparatus for mounting a mirror. 4,372,519, Cl. 248-466.000.
Hurd, Edford N. Beehive frame and method of construction thereof. 4,372,000, Cl. 6-10.000.
Hutchison, Joseph A., to Solar Kinetics, Inc. Method of manufacturing parabolic trough solar collector. 4,372,027, Cl. 29-448.000.
Hutchison, Joseph A., to Solar Kinetics, Inc. Solar collector module. 4,372,651, Cl. 350-292.000.
Hutson, Thomas, Jr., to Phillips Petroleum Company. HF Alkylation process and apparatus. 4,373,110, Cl. 585-719.000.
Hutter, Wilhelm, to Aktiengesellschaft Adolph Saurer. Electrical warp thread-monitoring apparatus for a loom. 4,372,346, Cl. 139-353.000.
Hydrola Ltd.: *See—*
Kaganovsy, Yaacov; Kustanovich, Yosef; Shmuter, Shimshon; Gelfer, Vadim; and Muchnik, Shimon, 4,372,818, Cl. 202-83.000.
Hyma, Marvin J., to General Motors Corporation. Vehicle strut type suspension with alignment adjustment. 4,372,575, Cl. 280-661.000.
I.D. Engineering, Inc.: *See—*
Vandebult, Jan, 4,373,163, Cl. 343-842.000.
Iannucci, Vincent A.; and Haehnel, Rudolf H., to Rockwell International Corp. Rotary braiding machine. 4,372,191, Cl. 87-48.000.

Ichinomiya, Tsutomu; Hosoe, Mamoru; Nagayama, Masayoshi; Chousa, Hirotaka; and Kimura, Rokusaburo, to Matsushita Electric Works, Ltd. Low frequency therapeutic instrument. 4,372,319, Cl. 128-421.000.
Ichinose, Isao: *See—*
Kunimoto, Go; Ichinose, Isao; Suzuki, Noboru; and Mori, Fumio, 4,372,457, Cl. 215-228.000.
Icking, Christian: *See—*
Kiestra, Philippus P.; and Icking, Christian, 4,372,249, Cl. 119-14.170.
Igarashi, Nihaku, to Yamaha Hatsudoki Kabushiki Kaisha. Tricycle vehicle. 4,372,416, Cl. 180-215.000.
Ihm, Gerald J., to Deere & Company. Drop hitch system. 4,372,573, Cl. 280-477.000.
Ikeguchi, Nobuyuki, to Mitsubishi Gas Chemical Company, Inc. Curable resin composition from cyanate ester and acrylic ester. 4,373,086, Cl. 528-322.000.
Ikemura, Masaaki: *See—*
Oda, Yoshio; Otouma, Hiroshi; Uchida, Keiichi; Morikawa, Shinsuke; and Ikemura, Masaaki, 4,372,938, Cl. 423-469.000.
Ikin, John B.; and Neale, Denis M., deceased (by Neale, Adeline I., executrix), to Ciba-Geigy AG. Light-mixing system. 4,372,678, Cl. 355-37.000.
Ikuzawa, Masanori: *See—*
Yoshikumi, Chikao; Hirose, Fumio; Ohmura, Yoshio; Fujii, Takayoshi; Ikuzawa, Masanori; Matsunaga, Kenichi; Ando, Takao; and Ohhara, Minoru, 4,372,948, Cl. 424-180.000.
Imada, Kiyoshi; Ueno, Susumu; Nishina, Yasuhide; and Nomura, Hirokazu, to Shin-Etsu Chemical Co. Ltd. Polyvinyl alcohol-clad shaped article of vinyl chloride resin. 4,372,986, Cl. 427-40.000.
Imai, Akira: *See—*
Takemura, Yasuhiko; Okazaki, Takahisa; and Imai, Akira, 4,372,323, Cl. 128-660.000.
Imai, Kazuo; Niigata, Kunihiro; Fujikura, Takashi; Hashimoto, Shinichi; and Takenaka, Toichi, to Yamanouchi Pharmaceutical Co., Ltd. Sulfamoyl-substituted phenethylamine derivatives and process of producing them. 4,373,106, Cl. 564-85.000.
Imai, Yoshikazu: *See—*
Motonami, Masanao; Ogawa, Hisashi; and Imai, Yoshikazu, 4,372,580, Cl. 280-802.000.
Imanishi, Nobuyuki: *See—*
Sugiyama, Takeshi; Shirouchi, Shoji; Tsuchiya, Osamu; Onoda, Mamoru; Yamashita, Atsuko; Fujita, Isao; and Imanishi, Nobuyuki, 4,372,779, Cl. 75-0.50R.
Imperial Chemical Industries Limited: *See—*
Short, Glyn D.; and Whittam, Thomas V., 4,372,930, Cl. 423-326.000.
Inaba, Nobuaki: *See—*
Sato, Hideyori; Inaba, Nobuaki; and Shinohara, Shigeru, 4,372,335, Cl. 137-101.000.
Independent Transfer Equipment Co.: *See—*
McCord, Lawless D., 4,372,452, Cl. 212-159.000.
Indesit Industria Elettrodomestici Italiana S.p.A.: *See—*
Belisomi, Pietro, 4,373,208, Cl. 455-186.000.
Industriewerk Schaeffler OHG: *See—*
Koschmieder, Hartumut, 4,372,623, Cl. 308-6.00C.
Inesso, Richard X. Operator for sliding doors. 4,372,005, Cl. 16-52.000.
Ing. C. Olivetti & Co., S.p.A.: *See—*
Bovio, Michele; and Demonte, Filippo, 4,372,694, Cl. 400-88.000.
Ingham, John D.: *See—*
Mueller, William A.; Ingham, John D.; and Reilly, William W., 4,373,039, Cl. 523-205.000.
Inoue, Kanji, to NHK Spring Co., Ltd. Hollow stabilizer for vehicle. 4,372,576, Cl. 280-689.000.
Instytut Elektrotechniki Oddzial Technologii i Materialoznawstwa Elektrotechnicznego: *See—*
Winkler, Jerzy; and Stankiewicz, Jerzy, 4,373,113, Cl. 174-179.000.
Intel Corporation: *See—*
Bohr, Mark T., 4,372,034, Cl. 29-577.00C.
Intel Magnetics, Inc.: *See—*
Triplett, Baylor B.; Ferrando, Carlo; and Galli, Guido, 4,372,808, Cl. 156-655.000.
Interco Incorporated: *See—*
Harrison, William E., 4,372,236, Cl. 112-291.000.
Interlake, Inc.: *See—*
Rasmussen, George E.; and Donkle, Lucius B., Jr., 4,372,451, Cl. 211-187.000.
International Business Machines Corporation: *See—*
Babcock, David H., 4,372,697, Cl. 400-232.000.
Berdinner, Edward J., Jr., 4,372,671, Cl. 355-8.000.
Bergeron, D. L.; Fleming, Daniel J.; and Stephens, Geoffrey B., 4,373,166, Cl. 357-15.000.
Demke, Kent R.; and Dwire, Jerold D., 4,373,194, Cl. 364-900.000.
Means, Rodney J; Plunkett, Galen P., Jr, Galen P.; Dennis, Charles A.; and Moon, John L., 4,373,183, Cl. 364-200.000.
Pries, Robert W., 4,372,672, Cl. 355-14.00R.
Quinn, Paul A., Jr., 4,372,699, Cl. 400-625.000.
Robinson, Neil L.; and Silkensen, Ralph D., 4,373,173, Cl. 360-121.000.
International Flavors & Fragrances, Inc.: *See—*
Light, Kenneth K.; McGhie, Joseph A.; Fujioka, Futoshi; and Yoshida, Takao, 4,373,108, Cl. 568-817.000.
International Harvester Co.: *See—*
Chatterjea, Probir K., 4,372,408, Cl. 180-6.200.
International Minerals & Chemical Corp.: *See—*
Lawver, James E.; McClintock, Walter O.; and Snow, Robert E., 4,372,843, Cl. 209-12.000.
International Paper Company: *See—*
Phillips, Richard B.; Kempf, Arthur W.; and Eckert, Robert C., 4,372,812, Cl. 162-40.000.
International Playtex, Inc.: *See—*
Stern, Harold; and Suleiman, Elisabeth, 4,372,322, Cl. 128-491.000.
International Silicone Corporation: *See—*
Winn, R. Alastair, 4,373,009, Cl. 428-424.200.
International Standard Electric Corporation: *See—*
Black, Philip W., 4,372,648, Cl. 350-96.330.
International Telephone and Telegraph Corporation: *See—*
Watson, Christopher A., 4,372,168, Cl. 73-861.280.
International Tool & Supply Co., Inc.: *See—*
Toelke, Lester W., 4,372,003, Cl. 15-88.000.
Interox (Societe Anonyme): *See—*
Clerbois, Lucien; and Plumet, Lucien, 4,372,813, Cl. 162-48.000.
Inukai, Mitsuo, to Toyota Jidosha Kogyo Kabushiki Kaisha. Seatbelt retractor. 4,372,501, Cl. 242-107.000.
Inventure, Inc.: *See—*
Goodwin, John D., 4,373,005, Cl. 428-357.000.
Ionics, Incorporated: *See—*
Waite, Warren A., 4,373,031, Cl. 521-32.000.
Ipsen Industries International GmbH: *See—*
Gohring, Werner; and Luiten, Cornelius H., 4,372,790, Cl. 148-16.500.
Irwin, Rodney C., to Koppers Company, Inc. Aligning device. 4,372,819, Cl. 202-239.000.
Ishiguro, Kimiko: *See—*
Arai, Tadashi; Takahashi, Katsuhiro; Ishiguro, Kimiko; and Yokoyama, Koji, 4,372,947, Cl. 424-121.000.
Ishii, Toshio; Mouri, Yasunori; Abe, Osamu; and Hasegawa, Taiji, to Hitachi, Ltd. Corrective feedback technique for controlling air-fuel ratio for an internal combustion engine. 4,373,187, Cl. 364-431.060.
Ishikawa, Seiji: *See—*
Kaneda, Takaho; Ishikawa, Seiji; Daimon, Hiroshi; Katsura, Toshio; Hondo, Tadahiro; and Ueda, Masahiro, 4,373,087, Cl. 528-337.000.
Ishikawa, Wataru: *See—*
Masukawa, Toyoaki; Ishikawa, Wataru; Okaniwa, Kenichiro; and Yamashita, Kiyoshi, 4,373,017, Cl. 430-270.000.
Ishikawa, Yasuyuki: *See—*
Matsumura, Isao; Ishikawa, Yasuyuki; Maruyama, Shigeo; Hirano, Reiji; and Kohayakawa, Yoshimi, 4,372,655, Cl. 351-206.000.
Ishikura, Tomoyuki: *See—*
Oki, Toshikazu; Matsuzawa, Yasue; Ishikura, Tomoyuki; Takeuchi, Tomio; and Umezawa, Hamao, 4,373,094, Cl. 536-6.400.
Isobe, Kimiyasu: *See—*
Yamada, Hideaki; Tani, Yoshiki; and Isobe, Kimiyasu, 4,373,026, Cl. 435-191.000.
Isogai, Hideaki; and Tanaka, Miki, to Fujitsu Limited. Decoder circuit. 4,373,196, Cl. 365-189.000.
Isshiki, Minoru: *See—*
Oizumi, Masayuki; Uekita, Masakazu; Goto, Masana; Azumi, Ichiro; Uozumi, Shoji; Abe, Masaharu; Fushiki, Yasuo; Isshiki, Minoru; and Kawasaki, Kunio, 4,372,800, Cl. 156-307.300.
Itakura, Keiichi, to City of Hope Research Institute. Solid-phase synthesis of polynucleotides. 4,373,071, Cl. 525-375.000.
ITT Industries, Inc.: *See—*
Pitt, Gillies D.; and Williamson, Roger J., 4,372,165, Cl. 73-861.220.
Iwai, Tomio, to Yamaha Hatsudoki Kabushiki Kaisha; and Sanshin Kogyo Kabushiki Kaisha. Lubricating system for outboard engine. 4,372,258, Cl. 123-73.0AD.
Iwata, Hiroshi; and Yamaoka, Tetsuo, to West Electric Co., Ltd. Device for indicating photographic exposure conditions. 4,372,657, Cl. 354-53.000.
Iwatani, Nobuo, to Nippon Seiko Kabushiki Kaisha. Moving table assembly. 4,372,223, Cl. 108-143.000.
J. M. Huber Corporation: *See—*
White, Herbert V., 4,372,221, Cl. 108-51.300.
J. M. Voith GmbH: *See—*
Wolf, Jakob; and Juhas, Simon, 4,372,816, Cl. 162-343.000.
J. R. Simplot Company: *See—*
Fisher, Wayland I.; and Petersen, Marvin J., 4,372,184, Cl. 83-98.000.
Jackson, Gerald D.: *See—*
Barrington, Burchus Q.; Clayton, Wilbur P.; and Jackson, Gerald D., 4,372,391, Cl. 166-373.000.
Jackson, Joseph J., to General Electric Company. Directionally strengthened copper alloy parts for a gas turbine. 4,372,789, Cl. 148-3.000.
Jackson, Otis. Vehicle exhaust system. 4,372,421, Cl. 181-243.000.
Jacob, Frederick W.: *See—*
Bobst, Robert W.; Garner, Billy J.; and Jacob, Frederick W., 4,372,758, Cl. 55-48.000.
Jacobson, Peter E.: *See—*
Allen, Terry S.; and Jacobson, Peter E., 4,372,633, Cl. 339-5.00M.
Jacobsthal, Herbert K., to Honeywell Information Systems Inc. Binary to one out of four converter. 4,373,152, Cl. 340-347.0DD.
Jakobsen, Kjell M.; and Nilsson, Claes T., to PLM Aktiebolag. Manufacture of articles by drawing. 4,372,908, Cl. 264-292.000.
James C. Barber and Associates, Inc.: *See—*
Barber, James C., 4,372,929, Cl. 423-323.000.

James, Kenneth A.: *See—*
Strahan, Virgil H.; James, Kenneth A.; and Quick, William H., 4,372,646, Cl. 350-96.310.
Janisch, Paul: *See—*
Bielz, Siegfried; Janisch, Paul; and Lohrberg, Karl, 4,372,939, Cl. 423-478.000.
Janke, Bernhard, to HEF Technische Entwicklung GmbH & Co. KG. Device for sealing a wing of a window, a door or the like in relation to a frame associated therewith. 4,372,084, Cl. 49-477.000.
Japan Atomic Energy Research Institute: *See—*
Hagiwara, Miyuki; and Morita, Yousuke, 4,373,046, Cl. 524-285.000.
Jay, Robert L.: *See—*
Caruthers, John E.; Jay, Robert L.; Riffel, Ronald E.; and Rothrock, Mark D., 4,372,157, Cl. 73-147.000.
JEB Energy Industries, Inc.: *See—*
Adams, Jerry W., 4,372,280, Cl. 123-557.000.
Jefferson, Francis D.: *See—*
Force, Wallace B., Jr.; and Jefferson, Francis D., 4,372,355, Cl. 142-55.000.
Jensen, Norman L., Jr.: *See—*
Chapman, Wilson M.; and Jensen, Norman L., Jr., 4,372,751, Cl. 44-2.000.
Jentzsch, Arndt; Johne, Hans; Hefftler, Victor; Kuhnert, Werner; and Karl, Reiner, to Veb Kombinat Polygraph "Werner Lamberz". Sheet gripping jar arrangement. 4,372,209, Cl. 101-409.000.
Jiewertz, Sten R.: *See—*
Gillbrand, Per S.; Axelson, Simon E.; and Jiewertz, Sten R., 4,372,119, Cl. 60-600.000.
Jobmatic, Inc.: *See—*
Ostlund, Roland J. A., 4,372,218, Cl. 104-88.000.
Jochum, Peter: *See—*
Schmitt, Werner; Purrmann, Robert; Jochum, Peter; and Hubner, Heinz-Joachim, 4,372,836, Cl. 204-159.230.
Johannson, Karl N.: *See—*
Helgstrand, Ake J. E.; Johannson, Karl N.; Misiorny, Alfons; Noren, Jan O.; and Stening, Goran, 4,372,894, Cl. 260-941.000.
Johansson, Lennart, to Aktiebolaget Bofors. Method of manufacturing projectiles. 4,372,019, Cl. 29-1.230.
Johne, Hans: *See—*
Jentzsch, Arndt; Johne, Hans; Hefftler, Victor; Kuhnert, Werner; and Karl, Reiner, 4,372,209, Cl. 101-409.000.
Johnson, Charles S. Amplification arrangement for violin sound bars. 4,372,189, Cl. 84-276.000.
Johnson & Johnson Baby Products Company: *See—*
Lindemann, Martin K. O.; Lukenbach, Elvin R.; and Verdicchio, Robert J., 4,372,869, Cl. 252-174.160.
Johnson, Kenneth C., to Hughes Aircraft Company. Directional diffusing screen. 4,372,639, Cl. 350-3.700.
Johnson, Kenneth M.: *See—*
Killinger, Karl H.; Johnson, Kenneth M.; and Totino, Peter J., 4,372,234, Cl. 112-258.000.
Johnson, Leo F.; and Van Uitert, LeGrand G., to Bell Telephone Laboratories, Incorporated. Optical waveguide termination. 4,372,641, Cl. 350-96.120.
Johnson, Paul H., to Phillips Petroleum Company. Waste heat recovery. 4,372,937, Cl. 423-454.000.
Johnson, Richard F.: *See—*
Wiers, John W.; Roper, Daniel W.; and Johnson, Richard F., 4,372,612, Cl. 297-374.000.
Johnstone, Norman E.; and Kehoe, John R., to United States Gypsum Company. Paper having mineral filler for use in the production of gypsum wallboard. 4,372,814, Cl. 162-124.000.
Jonsson, Nils A.: *See—*
Moreau, Pierre D.; and Jonsson, Nils A., 4,372,954, Cl. 424-248.530.
Jorgensen, Bradley H.: *See—*
Brochman, Wilfred R.; Hannula, Rodney R.; and Jorgensen, Bradley H., 4,372,460, Cl. 220-258.000.
Jos. Schlitz Brewing Company: *See—*
Elert, Karl; and Westphal, John C., 4,372,143, Cl. 72-343.000.
Jost, Manfred: *See—*
Knoke, Jurgen; Jost, Manfred; Fahrbach, Erich; and Tecl, Bohuslav, 4,373,000, Cl. 428-198.000.
Joy Manufacturing Company: *See—*
Gude, Klaus E.; Felsvang, Karsten S.; and Coe, Everett L., 4,372,926, Cl. 423-244.000.
Jozic, Ljerka, to Wuelfing, Johann A. Anti-arrythmic sulphonamide compositions. 4,372,955, Cl. 424-250.000.
Juhas, Simon: *See—*
Wolf, Jakob; and Juhas, Simon, 4,372,816, Cl. 162-343.000.
Julie, Jean-Jacques: *See—*
Houdard, Jean-Pierre; Julie, Jean-Jacques; and Leoni, Bernard G., 4,373,151, Cl. 329-104.000.
Jung, Alfred K.; Silberberg, Joseph; and Weil, Edward D., to Stauffer Chemical Company. Dibromoneopentyl phosphate melamine salt flame retardant. 4,373,103, Cl. 544-195.000.
Justusson, William M.: *See—*
Ackerman, Allen D.; Perkey, Conrad G.; Martin, Robert A.; and Justusson, William M., 4,372,112, Cl. 60-323.000.
Kaas, Povl, to H. & P. Kaas System Teknik ApS. Method and an apparatus for cleaning water in a swimming pool. 4,372,860, Cl. 210-748.000.
Kabs, Hermann: *See—*
Herold, Georg; and Kabs, Hermann, 4,372,907, Cl. 264-265.000.
Kabushiki Kaisha Daini Seikosha: *See—*
Suzuki, Keiichi, 4,372,046, Cl. 29-852.000.
Kabushiki Kaisha Hayashibara Seibutsu Kagaku Kenkyujo: *See—*
Matuhashi, Tyoku; Usui, Mitsuko; Yamamoto, Akio; Mitsuhashi, Masakazu; and Koyama, Shunsaku, 4,372,883, Cl. 260-112.00R.
Kabushiki Kaisha Kobe Seiko Sho: *See—*
Tamura, Shoichi; Asami, Takayoshi; and Sonoi, Hidekazu, 4,372,765, Cl. 62-29.000.
Kabushiki Kaisha Komatsu Seisakusho: *See—*
Ota, Shingo, 4,372,178, Cl. 74-512.000.
Sato, Hideyori; Inaba, Nobuaki; and Shinohara, Shigeru, 4,372,335, Cl. 137-101.000.
Kabushiki Kaisha Morita Seisakusho: *See—*
Hotta, Mitsuhiko, 4,372,608, Cl. 297-361.000.
Kabushiki Kaisha Saginomiya Seisakusho: *See—*
Tomioka, Soichiro; and Komiya, Yasuo, 4,372,486, Cl. 236-92.00B.
Kadono, Tetsuro: *See—*
Okumura, Tamotsu; and Kadono, Tetsuro, 4,372,850, Cl. 210-198.300.
Kaganovsy, Yaacov; Kustanovich, Yosef; Shmuter, Shimshon; Gelfer, Vadim; and Muchnik, Shimon, to Hydrola Ltd. Apparatus for the distillation and rectification of mixtures. 4,372,818, Cl. 202-83.000.
Kahn, Leonard R. Predictive distortion reduction in AM stereo transmitters. 4,373,115, Cl. 179-1.0GS.
Kai, Tomokazu: *See—*
Suzuki, Yoshiharu; and Kai, Tomokazu, 4,373,206, Cl. 455-103.000.
Kajihara, Takehiro: *See—*
Kaneno, Masayuki; and Kajihara, Takehiro, 4,373,030, Cl. 501-152.000.
Kamyr, Inc.: *See—*
Richter, Johan C. F. C.; and Sherman, Michael I., 4,372,711, Cl. 406-63.000.
Kanamori, Hiroshi: *See—*
Sano, Isao; and Kanamori, Hiroshi, 4,373,153, Cl. 340-87.000.
Kaneda, Ryoichi, to Trio Kabushiki Kaisha. Method and circuitry for controlling the intermediate frequency of an FM receiver to lessen phase distortion. 4,373,209, Cl. 455-208.000.
Kaneda, Takaho; Ishikawa, Seiji; Daimon, Hiroshi; Katsura, Toshio; Hondo, Tadahiro; and Ueda, Masahiro, to UBE Industries Ltd. O-Tolidine sulfone based copolyamide fiber. 4,373,087, Cl. 528-337.000.
Kanegafuchi Kagaku Kogyo Kabushiki Kaisha: *See—*
Oizumi, Masayuki; Uekita, Masakazu; Goto, Masana; Azumi, Ichiro; Uozumi, Shoji; Abe, Masaharu; Fushiki, Yasuo; Isshiki, Minoru; and Kawasaki, Kunio, 4,372,800, Cl. 156-307.300.
Kaneno, Masayuki; and Kajihara, Takehiro, to NGK Insulators, Ltd. Polycrystalline translucent alumina sintered body, a method for producing the same and a high pressure vapor discharge lamp obtained by using said sintered body. 4,373,030, Cl. 501-152.000.
Kang, Jung W.: *See—*
Gunesin, Binnur; Hamed, Gary R.; Kang, Jung W.; and Schulz, Donald N., 4,373,068, Cl. 525-218.000.
Kaniut, Herbert, to Ford Motor Company. Stopping and restarting device for the internal combustion engine of a motor vehicle. 4,372,262, Cl. 123-179.00J.
Kanou, Ikuo: *See—*
Yanagiuchi, Shigenobu; and Kanou, Ikuo, 4,373,192, Cl. 364-900.000.
Kao Soap Co., Ltd.: *See—*
Sato, Toshio; Suzuki, Sho; and Ohmura, Hidemasa, 4,373,053, Cl. 524-457.000.
Yagi, Kazuhisa; Suzuki, Sho; and Nakashima, Norihiko, 4,373,043, Cl. 524-130.000.
Kapaun, Gustav: *See—*
Fuchs, Hermann; Kapaun, Gustav; and Meininger, Fritz, 4,372,892, Cl. 260-458.00C.
Karabinis, Peter D.; and Miedema, Hotze, to Bell Telephone Laboratories, Incorporated. Space diversity combiner. 4,373,210, Cl. 455-273.000.
Karim, Khalid A.; Lakshmanan, Pallavoor R.; and Rea, James H., to Gulf Oil Corporation. Polymer compositions. 4,373,066, Cl. 525-133.000.
Karl, Reiner: *See—*
Jentzsch, Arndt; Johne, Hans; Hefftler, Victor; Kuhnert, Werner; and Karl, Reiner, 4,372,209, Cl. 101-409.000.
Kasiewicz, Stanley J. Control circuit for engine speed governor with power take off. 4,372,265, Cl. 123-352.000.
Kasparek, Alois; and Burger, Jurgen, to Hauni-Werke Korber & Co. KG. Apparatus for manipulating filter rod sections or the like between producing and processing machines. 4,372,710, Cl. 406-28.000.
Katchman, Arthur: *See—*
Haaf, William R.; Katchman, Arthur; and Lee, Gim F., Jr., 4,373,055, Cl. 524-505.000.
Kato, Masaru, to Mitsubishi Denki Kabushiki Kaisha. Electrical contact composition for a vacuum type circuit interrupter. 4,372,783, Cl. 75-246.000.
Kato, Shogenobu, to Sekisui Kagaku Kogyo Kabushiki Kaisha. Plastic valve having a cap nut coupler. 4,372,529, Cl. 251-151.000.
Kato, Toshikazu: *See—*
Shibata, Tsutomu; Kimura, Kenji; Satoh, Ken; Saitou, Sinichi; Kato, Toshikazu; Watanabe, Seizo; and Ohshima, Ken, 4,372,504, Cl. 242-198.000.
Kato, Yasuhiko: *See—*
Yamagami, Seiji; Nonaka, Hirohiko; Shimonaru, Tuneyoshi; Takashima, Koichi; and Kato, Yasuhiko, 4,372,846, Cl. 210-86.000.
Katsumata, Yutaka, to Fujitsu Limited. Dynamic address translation system. 4,373,179, Cl. 364-200.000.

Katsura, Toshio: *See—*
Kaneda, Takaho; Ishikawa, Seiji; Daimon, Hiroshi; Katsura, Toshio; Hondo, Tadahiro; and Ueda, Masahiro, 4,373,087, Cl. 528-337.000.
Katz, Edward R. Door protector. 4,372,364, Cl. 150-52.00R.
Kaufman, Jack W.: *See—*
Blake, Joseph W., III; and Kaufman, Jack W., 4,372,316, Cl. 128-325.000.
Kaufmann, Kenneth M., to Pako Corporation. Automatic variable-quantity/fixed-time anti-oxidation replenisher control system. 4,372,665, Cl. 354-298.000.
Kaufmann, Kenneth M., to Pako Corporation. Automatic variable-quantity/variable-time anti-oxidation replenisher control system. 4,372,666, Cl. 354-298.000.
Kausch, Erwin; and Todter, Folkhard, to B.A.T. Cigaretten-Fabriken GmbH. Fibrous material for tobacco smoke filter. 4,372,328, Cl. 131-332.000.
Kawaguchi, Masashi: *See—*
Sugimoto, Yoshikazu; Shirosaki, Kiyotaka; Kawaguchi, Masashi; and Takeshima, Masaki, 4,372,859, Cl. 210-739.000.
Kawamoto, Michio: *See—*
Otobe, Yutaka; and Kawamoto, Michio, 4,372,277, Cl. 123-571.000.
Kawamura, Atsushi: *See—*
Fujioka, Yoshisato; and Kawamura, Atsushi, 4,372,654, Cl. 350-427.000.
Kawana, Akio: *See—*
Okamoto, Katsunari; Edahiro, Takao; Kawana, Akio; and Miya, Tetsuo, 4,372,647, Cl. 350-96.330.
Kawasaki, Kunio: *See—*
Oizumi, Masayuki; Uekita, Masakazu; Goto, Masana; Azumi, Ichiro; Uozumi, Shoji; Abe, Masaharu; Fushiki, Yasuo; Isshiki, Minoru; and Kawasaki, Kunio, 4,372,800, Cl. 156-307.300.
Kazlauskas, Gasparas, to Astro-Arc Company. Apparatus for welding pipes. 4,373,125, Cl. 219-60.00A.
Kean, James P., Jr., to Process Control Corporation. Bulk material receiver. 4,372,713, Cl. 406-172.000.
Keffeler, Paul J. Medication dispenser. 4,372,445, Cl. 206-532.000.
Kehoe, John R.: *See—*
Johnstone, Norman E.; and Kehoe, John R., 4,372,814, Cl. 162-124.000.
Keister, Frank Z.: *See—*
Scapple, Robert Y.; Keister, Frank Z.; Grieger, Robert G.; and Himmel, Richard P., 4,372,037, Cl. 29-613.000.
Keith, Alfred H., to Dairy Farm Leasing Company. Prefabricated animal shelter. 4,372,251, Cl. 119-16.000.
Kelley Company Inc.: *See—*
Erlandsson, Kjell I., 4,372,226, Cl. 110-238.000.
Kellie, Truman F., to Minnesota Mining and Manufacturing Company. Extended area diffractive subtractive color filters. 4,372,649, Cl. 350-162.0SF.
Kempf, Arthur W.: *See—*
Phillips, Richard B.; Kempf, Arthur W.; and Eckert, Robert C., 4,372,812, Cl. 162-40.000.
Kendall Company, The: *See—*
Perlin, Alfred R., 4,372,297, Cl. 128-64.000.
Sergeant, Timothy L., 4,372,310, Cl. 128-284.000.
Villari, Frank K.; and Cianci, James P., 4,372,313, Cl. 128-295.000.
Wichman, Cynthia A., 4,371,986, Cl. 2-051.000.
Kendall, Stanley E., to American Home Products Corporation. Combination scratch filler and primer in aerosol form. 4,372,991, Cl. 427-140.000.
Kermer, Wolf-Dieter: *See—*
Neumann, Peter; Elser, Wolfgang; Bock, Gustav; and Kermer, Wolf-Dieter, 4,373,102, Cl. 544-143.000.
Kernforschungsanlage Julich Gesellschaft mit beschrankter Haftung: *See—*
von der Decken, Claus-Benedict; Hantke, Hans-Jurgen; and Sturmer, Walter, 4,372,912, Cl. 376-381.000.
Kesselman, David A. Tamper indicator. 4,372,593, Cl. 292-307.00B.
Kiedaisch, Randall A.; and Cooper, Leonard M., to Manville Service Corporation. Crown support beverage carrier. 4,372,599, Cl. 294-87.200.
Kiener, Heinz; Neder, Gunter; and Schurger, Ranier, to SKF Kugellagerfabriken GmbH. Bearing assembly. 4,372,628, Cl. 308-187.100.
Kiessling, Hans-Joachim: *See—*
Wojtech, Bernhard; Kiessling, Hans-Joachim; Becker, Wilhelm; and Hermann, Kurt, 4,373,073, Cl. 525-507.000.
Kiestra, Philippus P.; and Icking, Christian, to Westfalia Separator AG. Volumetric apparatus for milk and method of measuring the total quantity of milk collected from a cow in milking. 4,372,249, Cl. 119-14.170.
Killinger, Karl H.; Johnson, Kenneth M.; and Totino, Peter J., to Singer Company, The. Frame structure for a blindstitch hemming machine. 4,372,234, Cl. 112-258.000.
Kilpatrick, Jerry B.: *See—*
Lane, David; Woodward, Mervin; and Kilpatrick, Jerry B., 4,372,637, Cl. 339-244.00R.
Kim, Kwon S., to Star Manufacturing Co. Prefabricated panel construction system. 4,372,901, Cl. 264-46.500.
Kim, Syng N., to Wico Corporation. Studded mounting structure for switch. 4,373,123, Cl. 200-159.00A.
Kimball, Michael E.; and Randleman, Marvin T., to Goodyear Tire & Rubber Company, The. Curative for a two component isocyanate adhesive and said adhesive. 4,373,082, Cl. 528-60.000.
Kimberly-Clark Corporation: *See—*
Fendler, Eleanor J.; and Bernardin, Leo J., 4,372,312, Cl. 128-290.00R.
Kimura, Kenji: *See—*
Shibata, Tsutomu; Kimura, Kenji; Satoh, Ken; Saitou, Sinichi; Kato, Toshikazu; Watanabe, Seizo; and Ohshima, Ken, 4,372,504, Cl. 242-198.000.
Kimura, Rokusaburo: *See—*
Ichinomiya, Tsutomu; Hosoe, Mamoru; Nagayama, Masayoshi; Chousa, Hirotaka; and Kimura, Rokusaburo, 4,372,319, Cl. 128-421.000.
Kimura, Yoshimasa: *See—*
Tomosada, Masahiro; Kimura, Yoshimasa; and Sakamaki, Hisashi, 4,372,673, Cl. 355-14.00R.
Kincheloe, David W.; and Neathery, David O., to King Instrument Corporation. Flexible tape control apparatus. 4,372,503, Cl. 242-183.000.
King, Allen D., Jr.; King, Robert B.; and Sailers, Earl L., III, to University of Georgia Research Foundation, Inc. Photogeneration of active formate decomposition catalysts to produce hydrogen from formate and water. 4,372,833, Cl. 204-157.10R.
King Instrument Corporation: *See—*
Kincheloe, David W.; and Neathery, David O., 4,372,503, Cl. 242-183.000.
King, Robert B.: *See—*
King, Allen D., Jr.; King, Robert B.; and Sailers, Earl L., III, 4,372,833, Cl. 204-157.10R.
Kings, Donald H. M.; Marckmann, Jean-Claude; and Quang, Pham K., to Rhone-Poulenc Systemes. Process of transferring monocomponent developing powder with a volatile, dielectric liquid. 4,373,016, Cl. 430-126.000.
Kingsdown Medical Consultants Ltd.: *See—*
Steer, Peter L.; and Edwards, John V., 4,372,308, Cl. 128-283.000.
Kinney, Charles W., to GEO Vann, Inc. Well completion method and apparatus. 4,372,384, Cl. 166-278.000.
Kircher, Klaus: *See—*
Menges, George; Kircher, Klaus; and Franzkoch, Bernd, 4,372,898, Cl. 264-22.000.
Kirkendall, Richard D.; Drysdale, William H.; Kokinakis, Louise D.; and Burns, Bruce P., to United States of America, Army. Double ramp discarding sabot. 4,372,217, Cl. 102-521.000.
Kita, Junichiro: *See—*
Tahara, Susumu; Nishihira, Keigo; Miyatake, Takashi; Sawada, Hiroyuki; and Kita, Junichiro, 4,373,107, Cl. 564-473.000.
Kita, Sumio: *See—*
Osaki, Mikio; and Kita, Sumio, 4,373,164, Cl. 346-75.000.
Kitakami, Toshiyuki; and Akiyama, Yoshinori, to Nissan Motor Co., Ltd. Casing for seat-belt retractor. 4,372,613, Cl. 297-481.000.
Kitamori, Nobuyuki; Hemmi, Keizi; and Maeno, Masaya, to Takeda Chemical Industries, Ltd. Granules of sodium ascorbate and the production thereof. 4,372,968, Cl. 424-280.000.
Klauck, Manfred, to Flutec Fluidtechnische Gerate GmbH. Hydraulic pumping and switching apparatus. 4,372,849, Cl. 210-167.000.
Klee, David J.; Lovette, Norris G., Jr.; Ruprecht, David R.; Boyle, John F.; and Mullane, John C., Jr., to Air Products and Chemicals, Inc. Carbon dioxide snow generator with purging means. 4,372,130, Cl. 62-330.000.
Kleeman, Thomas E.: *See—*
Mohan, William L.; Willits, Samuel P.; and Kleeman, Thomas E., 4,373,135, Cl. 377-8.000.
Klein, Max. Polymerization, and corrosion resistance, enhancement by acid addition salts of methacrylic acid and a 2-mono (lower) alkylaminoethyl methacrylate or polymers of these salts. 4,372,913, Cl. 422-16.000.
Klein, Michael D.: *See—*
Langer, Robert S.; Linhardt, Robert; Cooney, Charles L.; Galliher, Parrish M.; Flanagan, Margaret M.; and Klein, Michael D., 4,373,023, Cl. 435-2.000.
Klein, Schanzlin & Becker Aktiengesellschaft: *See—*
Holzenberger, Kurt, 4,372,337, Cl. 137-240.000.
Kloostra, M. Leon: *See—*
Dehart, Marv L.; Kloostra, M. Leon; and Straub, Harold E., 4,372,170, Cl. 73-861.610.
Knapp, Paul A.; and Major, Frederick A., to Major, Frederick A. Rechargeable transparent slide viewer apparatus. 4,372,068, Cl. 40-367.000.
Knaus, Ernest; Liggett, Paul E.; and Namsick, Raymond J., to Goodyear Aerospace Corporation. Pneumatic lift pad. 4,372,533, Cl. 254-93.0HP.
Knoke, Jurgen; Jost, Manfred; Fahrbach, Erich; and Tecl, Bohuslav, to Carl Freudenberg, Firma. Soft, drapable, nonwoven interlining fabric. 4,373,000, Cl. 428-198.000.
Knostman, Gary J.: *See—*
Ehrlich, Richard A., 4,372,224, Cl. 108-159.000.
Knowles, Susan F., to Bell Telephone Laboratories, Incorporated. Optical fiber cable strain relief assembly. 4,372,511, Cl. 248-68.00R.
Knox, Lloyd C., to Halliburton Company. Method and apparatus for grouting of offshore platform pilings. 4,372,704, Cl. 405-225.000.
Kobayashi, Hideyuki, to Aisin Seiki Kabushiki Kaisha. Brake master cylinder for motor vehicles. 4,372,117, Cl. 60-562.000.
Kobayashi, Kazutsugu: *See—*
Shimamoto, Takeshi; Arai, Kazuo; and Kobayashi, Kazutsugu, 4,372,558, Cl. 273-238.000.
Kobayashi, Masayoshi: *See—*
Hiyama, Yasuhiro; Oshizawa, Hidekazu; Okamoto, Kenji; and Kobayashi, Masayoshi, 4,372,266, Cl. 123-357.000.

Kobe Steel, Ltd.: *See—*
Sugiyama, Takeshi; Shirouchi, Shoji; Tsuchiya, Osamu; Onoda, Mamoru; Yamashita, Atsuko; Fujita, Isao; and Imanishi, Nobuyuki, 4,372,779, Cl. 75-0.50R.
Kober, Alfred E.: *See—*
Mahoney, Dennis F.; Kober, Alfred E.; and Risbud, Subhash H., 4,372,227, Cl. 110-342.000.
Kodama, Yutaka; Oyama, Kaoru; Shimizu, Ryusaku; Nakabayashi, Masao; Nakashima, Yoshifumi; Sano, Takashi; Shibata, Masaaki; and Goden, Kiyoshi, to Toyama Chemical Co., Ltd. Treatment of cancer with carcinostatic and immunostimulating agent containing lysophospholipid and phospholipid. 4,372,949, Cl. 424-199.000.
Koehler Manufacturing Company: *See—*
Gulliksen, John E., 4,373,178, Cl. 362-280.000.
Kohayakawa, Yoshimi: *See—*
Matsumura, Isao; Ishikawa, Yasuyuki; Maruyama, Shigeo; Hirano, Reiji; and Kohayakawa, Yoshimi, 4,372,655, Cl. 351-206.000.
Kohler, Eberhard: *See—*
Aurich, Horst; Bochmann, Brigitta; Grosse, Klaus; Kohler, Eberhard; Nestler, Michael; Ochsenfarth, Hans-Christian; and Seyfarth, Gerhard, 4,372,548, Cl. 271-18.300.
Kojima, Seiichiro: *See—*
Takizawa, Junichi; Kojima, Seiichiro; Satoh, Nobuo; and Nakazato, Eiji, 4,372,578, Cl. 280-802.000.
Kokinakis, Louise D.: *See—*
Kirkendall, Richard D.; Drysdale, William H.; Kokinakis, Louise D.; and Burns, Bruce P., 4,372,217, Cl. 102-521.000.
Kokoku Rubber Industrial Company Limited: *See—*
Kuramochi, Hiroshi; and Toyoda, Ryuichi, 4,372,740, Cl. 425-544.000.
Kolarik, Oldrich, to Mack Trucks, Inc. Apparatus for controlling fuel flow. 4,372,268, Cl. 123-383.000.
Kolter, Gary L. Wire wrap removing tool. 4,372,182, Cl. 81-426.000.
Komiya, Shigeo: *See—*
Tarumi, Niro; Sugimura, Mitsuo; Komiya, Shigeo; and Tsuchiya, Makoto, 4,373,076, Cl. 526-261.000.
Komiya, Yasuo: *See—*
Tomioka, Soichiro; and Komiya, Yasuo, 4,372,486, Cl. 236-92.00B.
Komori Printing Machinery Co., Ltd.: *See—*
Toyoda, Hideaki, 4,372,207, Cl. 101-365.000.
Komoto, Akira; and Tsuji, Tomohiro, to Shimadzu Corporation. Electronic balance. 4,372,406, Cl. 177-212.000.
Komovsky, Vadim R.: *See—*
Sokolov, Sergei S.; Komovsky, Vadim R.; Vlasov, Leonid I.; Boretsky, Boris M.; and Shiryaev, Grigory V., 4,372,121, Cl. 60-606.000.
Konig, Klaus: *See—*
Reichmann, Wolfgang; Konig, Klaus; and Schonfelder, Manfred, 4,373,080, Cl. 528-45.000.
Konishi, Tatsuo: *See—*
Mizukami, Mineo; and Konishi, Tatsuo, 4,373,168, Cl. 358-19.000.
Konishiroku Photo Industry Co., Ltd.: *See—*
Masukawa, Toyoaki; Ishikawa, Wataru; Okaniwa, Kenichiro; and Yamashita, Kiyoshi, 4,373,017, Cl. 430-270.000.
Yukawa, Koji; Miyazaki, Masayuki; and Murahashi, Takashi, 4,372,674, Cl. 355-14.00D.
Kono, Tateomi: *See—*
Miyata, Shin; Kono, Tateomi; Shibazaki, Kenji; and Utsunomiya, Yoichi, 4,372,676, Cl. 355-14.00C.
Konopko, Matthew S., to Stone Container Corp. Self-locking protective pads and blank therefor. 4,372,446, Cl. 206-586.000.
Koppers Company, Inc.: *See—*
Ahn, Byung K., 4,372,828, Cl. 204-103.000.
Irwin, Rodney C., 4,372,819, Cl. 202-239.000.
Oberley, William J., 4,373,010, Cl. 428-532.000.
Korbuly, Jozsef: *See—*
Gombocz, Karoly; Korbuly, Jozsef; Krampe, Geza; Szatmari, Jozsef; and Szoke, Karoly, 4,372,172, Cl. 73-862.390.
Korenberg, Jakob, to York-Shipley, Inc. Fluidized bed reactor utilizing a conical-shaped support and method of operating the reactor. 4,372,228, Cl. 110-347.000.
Koschmieder, Hartumut, to Industriewerk Schaeffler OHG. Recirculating ball bearing. 4,372,623, Cl. 308-6.00C.
Koshugi, Junichi, to Kureha Kagaku Kogyo Kabushiki Kaisha. Cross-linked chitin derivatives. 4,373,096, Cl. 536-20.000.
Kossmann, Hans: *See—*
Herdzina, Frank J.; Kossmann, Hans; and Lemke, Harold C., 4,372,720, Cl. 413-56.000.
Kostelnik, Robert J.: *See—*
Dieck, Ronald L.; and Kostelnik, Robert J., 4,373,067, Cl. 525-146.000.
Koster, Robertus J. C.; Six, Volker; and Hale, Peter, to Procter & Gamble Company, The. Detergent composition containing low level of substituted polyamines. 4,372,882, Cl. 252-529.000.
Kovacs, Albert J. Magnetic device for treating hydrocarbon fuels. 4,372,852, Cl. 210-222.000.
Kovacs, Gabor: *See—*
Takacs, Kalman; Papp, Maria H.; Kovacs, Gabor; Ajzert, Ilona K.; Simay, Antal; Nagy, Peter L.; Puskas, Marian E.; Sebestyen, Gyula; Stadler, Istvan; and Sumeghy, Zoltan, 4,373,104, Cl. 546-145.000.
Kowalski, Daniel J.; and Ferguson, Douglas J., to Four Star Corporation. Article carrier having variably positionable cross-rail bracket. 4,372,469, Cl. 224-321.000.
Koyama, Shunsaku: *See—*
Matuhashi, Tyoku; Usui, Mitsuko; Yamamoto, Akio; Mitsuhashi, Masakazu; and Koyama, Shunsaku, 4,372,883, Cl. 260-112.00R.
Kozponti Banyaszati Fejlesztesi Intezet: *See—*
Gombocz, Karoly; Korbuly, Jozsef; Krampe, Geza; Szatmari, Jozsef; and Szoke, Karoly, 4,372,172, Cl. 73-862.390.
Kragh, Loren G.: *See—*
Sanderson, William G.; Sumner, Richard B.; and Kragh, Loren G., 4,372,897, Cl. 261-153.000.
Krainhofer, Gunter, to U.S. Philips Corporation. Device for fixing an apparatus in a cut-out of a panel. 4,372,509, Cl. 248-27.100.
Krammer, Robert, deceased (by Krammer, Ruth, legal representative), to Rexnord Inc. Accumulating conveyor. 4,372,441, Cl. 198-781.000.
Krammer, Ruth, legal representative: *See—*
Krammer, Robert, deceased, 4,372,441, Cl. 198-781.000.
Krampe, Geza: *See—*
Gombocz, Karoly; Korbuly, Jozsef; Krampe, Geza; Szatmari, Jozsef; and Szoke, Karoly, 4,372,172, Cl. 73-862.390.
Krasborn, Gottfried; Roentgen, Paul; Meier, Wilhelm; and Erdweg, Josef, to Saint-Gobain Vitrage. Concealed electric heating element arrangement for vehicle windshields. 4,373,130, Cl. 219-203.000.
Krasovsky, Boris P.; Melnik, Vladimir V.; and Malkin, Daniel D. Instantaneous calender device with spring and tappet mounted on rotary shifter. 4,372,687, Cl. 368-28.000.
Kray, William D.: *See—*
Chung, Rack H.; and Kray, William D., 4,372,835, Cl. 204-159.130.
Kretschmer, Frank F.: *See—*
Lewis, Bernard L.; and Kretschmer, Frank F., 4,373,190, Cl. 364-715.000.
Krings, Josef. Excavation or trenching plate. 4,372,709, Cl. 405-282.000.
Krumwiede, John F.; and Amrhein, Alan G., to PPG Industries, Inc. Melting glass with two stage NO_x control. 4,372,770, Cl. 65-27.000.
Kublanovsky, Lev B.: *See—*
Muraviev, Gennady A.; and Kublanovsky, Lev B., 4,372,151, Cl. 73-40.50A.
Kubo, Kunimichi; Yoshikawa, Mamoru; Watanabe, Motokazu; Miyazaki, Yasunosuke; and Miyoshi, Mituji, to Nippon Oil Company, Limited. Vapor phase polymerization apparatus for olefins. 4,372,919, Cl. 422-137.000.
Kubota, Ltd.: *See—*
Yamamoto, Ryozo; Yanase, Keiichi; and Oku, Junzo, 4,372,532, Cl. 251-175.000.
Kuckes, Arthur F., to Cornell Research Foundation, Inc. Method of determining the location of a deep-well casing by magnetic field sensing. 4,372,398, Cl. 175-45.000.
Kuhnert, Werner: *See—*
Jentzsch, Arndt; Johne, Hans; Hefftler, Victor; Kuhnert, Werner; and Karl, Reiner, 4,372,209, Cl. 101-409.000.
Kulhanek, Emanuel; and Aboussafy, John, to Corod Manufacturing Ltd. Rotary drive assembly for downhole rotary pump. 4,372,379, Cl. 166-68.500.
Kulik, Conrad J.; and Lebowitz, Howard E., to Electric Power Research Institute, Inc. Coal liquefaction process. 4,372,838, Cl. 208-10.000.
Kulprathipanja, Santi; and Neuzil, Richard W., to UOP Inc. Zeolite molecular sieve adsorbent for an aqueous system. 4,372,876, Cl. 252-430.000.
Kump, Ernest J. Modular building structures. 4,372,087, Cl. 52-79.120.
Kunimoto, Go; Ichinose, Isao; Suzuki, Noboru; and Mori, Fumio, to Toyo Seikan Kaisha, Ltd. Closure cap having prize markings and peelable liner. 4,372,457, Cl. 215-228.000.
Kuo, Chang-Kiang: *See—*
Tsaur, Shyh-Chang; and Kuo, Chang-Kiang, 4,372,031, Cl. 29-571.000.
Kuramochi, Hiroshi; and Toyoda, Ryuichi, to Kokoku Rubber Industrial Company Limited. Molding apparatus. 4,372,740, Cl. 425-544.000.
Kureha Kagaku Kogyo Kabushiki Kaisha: *See—*
Koshugi, Junichi, 4,373,096, Cl. 536-20.000.
Yoshikumi, Chikao; Fujii, Takayoshi; Saito, Kenichi; Fujii, Masahiko; and Niimura, Koichi, 4,372,890, Cl. 260-429.00R.
Yoshikumi, Chikao; Hirose, Fumio; Ohmura, Yoshio; Fujii, Takayoshi; Ikuzawa, Masanori; Matsunaga, Kenichi; Ando, Takao; and Ohhara, Minoru, 4,372,948, Cl. 424-180.000.
Kurosawa, Keiji: *See—*
Hanabusa, Takayoshi; Yamamoto, Kenji; Umemoto, Shinzi; Kurosawa, Keiji; and Yamashita, Mitsuo, 4,372,804, Cl. 156-631.000.
Kurtz, Hobart L., Jr.: *See—*
Chisholm, Douglas R.; and Kurtz, Hobart L., Jr., 4,373,181, Cl. 364-200.000.
Kustanovich, Yosef: *See—*
Kaganovsy, Yaacov; Kustanovich, Yosef; Shmuter, Shimshon; Gelfer, Vadim; and Muchnik, Shimon, 4,372,818, Cl. 202-83.000.
Kuwajima, Teruaki: *See—*
Furukawa, Junji; Furuno, Nobuo; Matsumura, Akira; and Kuwajima, Teruaki, 4,373,074, Cl. 526-92.000.
Kwauka, Gerd-Georg: *See—*
Dudziak, Ernst; Kwauka, Gerd-Georg; Plate, Arthur; and Lubeck, Hermann, 4,372,201, Cl. 100-7.000.
Kyster, Erik: *See—*
Petersen, Hans C.; Kyster, Erik; Thomsen, Svend E.; and Flagstad, Carl O., 4,372,413, Cl. 180-152.000.
Kyung, Jai H.; and Holehouse, Joseph G., to Ashland Oil, Inc. Production of isocyanic acid. 4,372,933, Cl. 423-365.000.

Kyung, Jai H.; and Brusky, Phyllis L., to Ashland Oil, Inc. Production of isocyanic acid. 4,372,934, Cl. 423-365.000.
Laake, Dennis L. Self-contained re-keyable lock. 4,372,139, Cl. 70-383.000.
Laakmann, Katherine D.; and Laakmann, Peter, to Walwel, Inc. RF Excited waveguide gas laser. 4,373,202, Cl. 372-64.000.
Laakmann, Peter: *See—*
Laakmann, Katherine D.; and Laakmann, Peter, 4,373,202, Cl. 372-64.000.
LaBate, Michael D. Blast furnace trough and liner combination. 4,372,544, Cl. 266-281.000.
Lacour, Alain P.: *See—*
Langlois, Michel; Lacour, Alain P.; Bucher, Bernard P.; and Mocquet, Gisele C., 4,372,967, Cl. 424-279.000.
LaCroix, Eugene F. Line maker with laser source. 4,372,640, Cl. 350-6.300.
Ladt, Carroll H., to Pebco, Inc. Load out pivoting chute system and method. 4,372,730, Cl. 414-786.000.
Lafon, Louis, to Societe Anonyme Dite: Laboratoire L. Lafon. Addition salts of substituted aralkylamines, their method of preparation and their use as pharmaceuticals. 4,372,969, Cl. 424-282.000.
Lakshmanan, Pallavoor R.: *See—*
Karim, Khalid A.; Lakshmanan, Pallavoor R.; and Rea, James H., 4,373,066, Cl. 525-133.000.
Lam, Hon W., to Texas Instruments Incorporated. Retaining wall technique to maintain physical shape of material during transient radiation annealing. 4,372,990, Cl. 427-53.100.
Lambe, John J.: *See—*
McCarthy, Shaun L.; and Lambe, John J., 4,373,145, Cl. 313-503.000.
Lambregts, Antonius A., to Boeing Company, The. Vertical flight path steering system for aircraft. 4,373,184, Cl. 364-434.000.
Lamy, Jacques E. Fuel for piston internal combustion injection engines. 4,372,752, Cl. 44-50.000.
Lancz, Albert J., to Colgate-Palmolive Company. Grill and oven cleaner. 4,372,788, Cl. 134-4.000.
Landa, Vaclav; Vitek, Jaromir; Nejedly, Pavel; Holpuch, Vladimir; Bubelis, Juozas; and Stepanovicius, Atanas-Nemezyus, to Statni vyzkumny ustav materialu. Electrolyte for cathodic deposition of nickel alloys with iron. 4,372,826, Cl. 204-43.00T.
Landsman, Douglas A.; and Luczak, Francis J., to United Technologies Corporation. Process using noble metal-chromium alloy catalysts in an electrochemical cell. 4,373,014, Cl. 429-13.000.
Lane, David; Woodward, Mervin; and Kilpatrick, Jerry B., to AMP Incorporated. Bond shield terminal. 4,372,637, Cl. 339-244.00R.
Lane, Ernest, to American Hospital Supply Corp. Low-pressure fixation of valvular tissue intended for implantation. 4,372,743, Cl. 8-94.110.
Lange, Karl-Heinz, to Balda-Werke Photographische Gerate und Kunststoff GmbH & Co., KG. Tensioning and releasing assembly for a camera shutter. 4,372,661, Cl. 354-204.000.
Langer, Robert S.; Linhardt, Robert; Cooney, Charles L.; Galliher, Parrish M.; Flanagan, Margaret M.; and Klein, Michael D., to Massachusetts Institute of Technology. Process for neutralizing heparin. 4,373,023, Cl. 435-2.000.
Langer, Ruth. Safety device for scaffoldings. 4,372,424, Cl. 182-119.000.
Langlois, Michel; Lacour, Alain P.; Bucher, Bernard P.; and Mocquet, Gisele C., to Delalande S.A. 3H-Dihydrofuranone-2 derivatives and pharmaceutical use thereof. 4,372,967, Cl. 424-279.000.
Langseder, Neal E.: *See—*
Dassler, Karl O.; and Langseder, Neal E., 4,372,462, Cl. 220-269.000.
Larsen, Robert H.; and Giaimo, Anthony, to Singer Company, The. Adjustable thread tensioning device for a sewing machine. 4,372,502, Cl. 242-149.000.
Larson, Kenneth W.: *See—*
Miller, Robert A.; Larson, Kenneth W.; and Schopen, Joseph L., 4,372,100, Cl. 53-428.000.
Larson, Leigh R., to Hi-Life Rubber, Inc. Milking inflation. 4,372,250, Cl. 119-14.470.
Larsson, Lars-Ake L.; Gullberg, Claes-Ake; Stenberg, Kaj; and Boberg, Nils G. E., to Gambro AB. Device for the separation of a liquid, especially whole blood. 4,372,484, Cl. 494-14.000.
Latsch, Reinhard; and Bianchi, Valerio, to Robert Bosch GmbH. Method and apparatus for controlling the composition of the combustible mixture of an engine. 4,372,270, Cl. 123-440.000.
LaViolette, Paul A.; Caccioli, Anthony; Garcia, Alexander; Hotchkiss, Earl H.; and Marchitto, Alfred J., Jr., to Gulf & Western Manufacturing Company. Hardware snap and method of producing same. 4,372,016, Cl. 24-241.0PS.
Law, Henry H., to Bell Telephone Laboratories, Incorporated. Recovery of gold in gold plating processes. 4,372,830, Cl. 204-110.000.
Lawson, Christopher J.; and Symes, Kenneth C., to Talres Development (N.A.) N.V. Suspensions and gels of indican and their uses. 4,372,785, Cl. 106-170.000.
Lawver, James E.; McClintock, Walter O.; and Snow, Robert E., to International Minerals & Chemical Corp. Method of beneficiating phosphate ores containing dolomite. 4,372,843, Cl. 209-12.000.
Le Materiel Telephonique Thomson-CSF: *See—*
Houdard, Jean-Pierre; Julie, Jean-Jacques; and Leoni, Bernard G., 4,373,151, Cl. 329-104.000.
Leavitt, Alvan W.; and Primm, Alice E., to Claim Guard Associates. Heat and detection resistant identification apparatus. 4,373,159, Cl. 343-6.50R.
Lebowitz, Howard E.: *See—*
Kulik, Conrad J.; and Lebowitz, Howard E., 4,372,838, Cl. 208-10.000.
Le Caire, Robert A., Jr.; and Wendt, David W., to Coca-Cola Company, The. Pull pad concentrated air deodorizer. 4,372,490, Cl. 239-59.000.
LeClair, Francis J.; and Surgant, John M., to Monsanto Company. Flowable herbicides. 4,372,777, Cl. 71-93.000.
Leduc, Kenneth C.: *See—*
Sugalski, Raymond K.; Leduc, Kenneth C.; and Morris, Jesse L., 4,373,129, Cl. 219-79.000.
Lee, Cecil D.: *See—*
Fields, John T.; and Lee, Cecil D., 4,372,787, Cl. 134-1.000.
Lee, Cheuk-Ming, to Refined Industry Company Limited, The. Electrical toy vehicle tracks. 4,372,489, Cl. 238-10.00F.
Lee, Gim F., Jr.: *See—*
Bennett, James G., Jr.; and Lee, Gim F., Jr., 4,373,064, Cl. 525-68.000.
Cooper, Glenn D.; and Lee, Gim F., Jr., 4,373,045, Cl. 524-141.000.
Haaf, William R.; Katchman, Arthur; and Lee, Gim F., Jr., 4,373,055, Cl. 524-505.000.
Lee, Hugh, to Atari, Inc. Releaseable hinge mechanism. 4,372,007, Cl. 16-260.000.
Lee, Marlow, to Ateliers des Charmilles S.A. Vented heat transfer tube assembly. 4,372,374, Cl. 165-70.000.
Legardinier, Andre, to Decoufle S.A.R.L. Device for supplying with ink printing apparatus for cigarette-making machines. 4,372,208, Cl. 101-366.000.
Le Grand, Alexander J.; and Barnhouse, Richard A., to Menasha Corporation. Stackable/nestable/dividable storage bin. 4,372,444, Cl. 206-505.000.
Lehtinen, Esko, to Pullmax Aktiebolag. Program controlled punching and nibbling machine. 4,372,183, Cl. 83-71.000.
Leib, Russel W., Jr., to Mead Corporation, The. Bottle carrier. 4,372,600, Cl. 294-87.200.
Lely Independence Mfg., Inc.: *See—*
Blumenshine, Richard A., 4,372,492, Cl. 239-168.000.
Le Marchand, Claude: *See—*
Delaunay, Jean; and Le Marchand, Claude, 4,372,428, Cl. 188-73.350.
Lemke, Harold C.: *See—*
Herdzina, Frank J.; Kossmann, Hans; and Lemke, Harold C., 4,372,720, Cl. 413-56.000.
Leon, Harry I. Foldable drafting table with drawers. 4,372,631, Cl. 312-231.000.
Leoni, Bernard G.: *See—*
Houdard, Jean-Pierre; Julie, Jean-Jacques; and Leoni, Bernard G., 4,373,151, Cl. 329-104.000.
Leprino Foods Company: *See—*
Reinbold, George W.; and Reddy, Malireddy S., 4,372,979, Cl. 426-36.000.
Lerman, Max, to U.S. Manufacturing Co. Knee brace. 4,372,298, Cl. 128-80.00C.
Lerman, Michael J.; and Zamory, William, to De Dietrich (USA) Inc. Cover balance assembly and gasket protector device. 4,372,461, Cl. 220-260.000.
Letterman, Gary L.: *See—*
Hagelberg, Allen C.; Allardt, Clark E.; Lobitz, Walter A.; Thornburg, Robert O.; Zimmerman, George F.; Letterman, Gary L.; and Helbron, John W., 4,372,239, Cl. 114-20.00A.
Leupold, Ernst I.: *See—*
Wunder, Friedrich; Leupold, Ernst I.; Hachenberg, Horst; Schmidt, Hans-Joachim; and Unger, Klaus, 4,372,878, Cl. 252-455.00Z.
Leveque, Alain: *See—*
Helgorsky, Jacques; and Leveque, Alain, 4,372,923, Cl. 423-112.000.
Levitt, George, to Du Pont de Nemours, E. I., and Company. Herbicidal N-(pyridinylaminocarbonyl)benzenesulfonamides. 4,372,778, Cl. 71-94.000.
Lewis, Andrew D., to Chicago Rawhide Manufacturing Company. Fuel filter assembly and cartridge. 4,372,847, Cl. 210-86.000.
Lewis, Bernard L.; and Kretschmer, Frank F., to United States of America, Navy. Efficient, precompression, bandwidth-tolerant, digital pulse expander-compressor. 4,373,190, Cl. 364-715.000.
Lewis, Edwin B.; and Moore, Roy N., Jr., to Mead Corporation, The. Brinell hardness measuring system. 4,372,152, Cl. 73-81.000.
Licari, Vito; and Licari, Yaffa, to Basic Line, Inc. Hanging racks. 4,372,450, Cl. 211-87.000.
Licari, Yaffa: *See—*
Licari, Vito; and Licari, Yaffa, 4,372,450, Cl. 211-87.000.
Licentia Patent-Verwaltungs-GmbH: *See—*
Unger, Hans-Georg, 4,372,644, Cl. 350-96.200.
Lieberman, Leon D. Method of smoking food products. 4,372,981, Cl. 426-235.000.
Liebherr-Verzahntechnik GmbH: *See—*
Wiener, Dieter; Sulzer, Gerd; Skyba, Rudolf, deceased; and Pomp, Jurgen, 4,372,085, Cl. 51-216.0ND.
Lien, Neil C., to Baker Manufacturing Company. Soft metal seal. 4,372,565, Cl. 277-236.000.
Lienau, Jeffrey A., to United States of America, Army. First motion detector. 4,372,192, Cl. 89-1.800.
Liggett, Paul E.: *See—*
Knaus, Ernest; Liggett, Paul E.; and Namsick, Raymond J., 4,372,533, Cl. 254-93.0HP.

Light, Kenneth K.; McGhie, Joseph A.; Fujioka, Futoshi; and Yoshida, Takao, to International Flavors & Fragrances, Inc. Bridged tricyclic alcohol, process for preparing same and perfumery use thereof. 4,373,108, Cl. 568-817.000.
Likhite, Vilas V. Antigen compounds. 4,372,945, Cl. 424-92.000.
Lile, Derek L.: *See—*
Collins, David A.; and Lile, Derek L., 4,372,032, Cl. 29-571.000.
Lindberg, Jan F., to United States of America, Navy. Parametric dual mode transducer. 4,373,143, Cl. 310-334.000.
Linde, James P., to Sperry Corporation. Microprogrammed control system capable of pipelining even when executing a conditional branch instruction. 4,373,180, Cl. 364-200.000.
Lindemann, Martin K. O.; Lukenbach, Elvin R.; and Verdicchio, Robert J., to Johnson & Johnson Baby Products Company. Detergent compositions. 4,372,869, Cl. 252-174.160.
Lindroos, Ingvald R., to Rilett Energitjanst AB. Scrubber for cleaning dust-loaded gas and steam. 4,372,761, Cl. 55-260.000.
Linear Corporation: *See—*
Berman, Herbert L.; and Sprout, James C., 4,372,690, Cl. 374-29.000.
Linhardt, Robert: *See—*
Langer, Robert S.; Linhardt, Robert; Cooney, Charles L.; Galliher, Parrish M.; Flanagan, Margaret M.; and Klein, Michael D., 4,373,023, Cl. 435-2.000.
Linville, Richard D. Support shackle and product drop mechanism. 4,372,009, Cl. 17-44.100.
Linville, Richard D. Method of packing poultry. 4,372,099, Cl. 53-415.000.
Liotta, Ronald, to Exxon Research and Engineering Co. O-Alkylated-/O-acylated coal and coal bottoms. 4,372,750, Cl. 44-1.00R.
Lisfeld, Robert; and Bender, Reinhold, to Ernst Leitz Wetzlar GmbH. Mounting for microscope lens. 4,372,650, Cl. 350-252.000.
Lister, Warren S. Tractor and trailer combination. 4,372,571, Cl. 280-423.00A.
L'Italien, Yvon J., to Warner-Lambert Company. Quaternary derivatives of N-(substituted-aminoalkyl)-2-oxo-1-pyrrolidine-acetamides as cognition activators. 4,372,960, Cl. 424-267.000.
Liu, Pao-Lo P.; and Marcatili, Enrique A., to Bell Telephone Laboratories, Incorporated. Standing-wave, velocity-matched gate. 4,372,643, Cl. 350-96.140.
Liu, Yi-Tsung: *See—*
Ganguly, Ashit K.; Sarre, Olga; and Liu, Yi-Tsung, 4,373,095, Cl. 536-7.100.
Livorsi, Carl F., to Quartrol Corporation. Valve and seal. 4,372,530, Cl. 251-173.000.
Lobeck, Walter G., Jr.: *See—*
Wu, Yao H.; and Lobeck, Walter G., Jr., 4,372,887, Cl. 548-468.000.
Lobitz, Walter A.: *See—*
Hagelberg, Allen C.; Allardt, Clark E.; Lobitz, Walter A.; Thornburg, Robert O.; Zimmerman, George F.; Letterman, Gary L.; and Helbron, John W., 4,372,239, Cl. 114-20.00A.
Lockheed Corporation: *See—*
Welch, Joseph J.; Grove, William C.; and Moran, Michael E., 4,372,517, Cl. 248-267.000.
Zsolnay, Andrew, 4,373,092, Cl. 528-481.000.
Loctite Corporation: *See—*
Watson, Colin; and Dunn, David J., 4,372,245, Cl. 118-56.000.
Loew, Peter: *See—*
Zink, Rudolf; and Loew, Peter, 4,372,896, Cl. 260-165.000.
Lohrberg, Karl: *See—*
Bielz, Siegfried; Janisch, Paul; and Lohrberg, Karl, 4,372,939, Cl. 423-478.000.
Loken, Arlin D.; and Luebkemann, Leroy, to Fiat-Allis Construction Machinery, Inc. Modular instrument console. 4,372,410, Cl. 180-89.120.
Loken, Tor: *See—*
Reed, Marion G.; Loken, Tor; and Bryhn, Odd R., 4,372,786, Cl. 106-900.000.
Lombard, Gerard, to Essilor International (Compagnie Generale d'Optique). Blocking apparatus for fixing a metal block to the finished face of a semi-finished spectacle lens blank. 4,372,368, Cl. 164-332.000.
Long, Clyde A., to Sonco Wholesale Fence Inc. Polymer coated chain link fencing. 4,372,992, Cl. 427-185.000.
Look International Enterprises, Inc.: *See—*
Baumann, Jack, 4,372,317, Cl. 128-330.000.
Lopez, Fred T. Precast concrete modular building panel. 4,372,092, Cl. 52-612.000.
Lord Corporation: *See—*
Flower, Wallace C., 4,372,411, Cl. 180-89.150.
Lorenzi, Donald E.: *See—*
O'Connor, Donald T.; Lorenzi, Donald E.; Flaherty, John J.; and Schaefer, Edward, 4,372,658, Cl. 354-63.000.
Lovable Company, The: *See—*
Robinson, Earl, 4,372,321, Cl. 128-463.000.
Loveland, Robert S., to Perkin-Elmer Corporation, The. Flowmeter system with digital phase shifter and calibration. 4,372,166, Cl. 73-861.280.
Loveland, Robert S., to Perkin-Elmer Corporation, The. Flowmeter system with improved loop gain. 4,372,167, Cl. 73-861.280.
Lover, Myron J.; Singer, Arnold J.; Lynch, Donald M.; and Rhodes, William E., III, to Block Drug Company, Inc. Polyoxethylene derivatives as antipruritic ectoparasiticide. 4,372,977, Cl. 424-342.000.
Lovette, Norris G., Jr.: *See—*
Klee, David J.; Lovette, Norris G., Jr.; Ruprecht, David R.; Boyle, John F.; and Mullane, John C., Jr., 4,372,130, Cl. 62-330.000.
Lowry, Edward E., Jr. Floating fish feeder. 4,372,252, Cl. 119-51.00R.
Lu, Wei C., to Eastman Kodak Company. Apparatus for flash fusing tuner images. 4,373,131, Cl. 219-216.000.
Lubeck, Hermann: *See—*
Dudziak, Ernst; Kwauka, Gerd-Georg; Plate, Arthur; and Lubeck, Hermann, 4,372,201, Cl. 100-7.000.
Lucas, Eugene F.: *See—*
Anderson, David H.; and Lucas, Eugene F., 4,372,414, Cl. 180-165.000.
Lucas Industries Limited: *See—*
Adams, Graham L., 4,372,267, Cl. 123-366.000.
Luczak, Francis J.: *See—*
Landsman, Douglas A.; and Luczak, Francis J., 4,373,014, Cl. 429-13.000.
Luebke, Clement J.; Mitchell, John A.; and Daniels, Lowell W., to Alco Standard Corporation. Method of operating a pressure fryer. 4,372,980, Cl. 426-231.000.
Luebkemann, Leroy: *See—*
Loken, Arlin D.; and Luebkemann, Leroy, 4,372,410, Cl. 180-89.120.
Luiten, Cornelius H.: *See—*
Gohring, Werner; and Luiten, Cornelius H., 4,372,790, Cl. 148-16.500.
Lukenbach, Elvin R.: *See—*
Lindemann, Martin K. O.; Lukenbach, Elvin R.; and Verdicchio, Robert J., 4,372,869, Cl. 252-174.160.
Lundberg, Hans G., to Marinkonsult Hans Lundberg AG. Assembly for treating vessel hulls. 4,372,242, Cl. 114-222.000.
Lutelec Luchaire Equipement: *See—*
Sandillon, Bernard, 4,372,140, Cl. 72-53.000.
Lutz, Michael A., to Raychem Corporation. Temperature excursion sensing and locating apparatus. 4,372,693, Cl. 374-111.000.
Lutz, Theodore A. Material-handling apparatus. 4,372,726, Cl. 414-517.000.
Luxon, Bruce A.: *See—*
Abolins, Visvaldis; and Luxon, Bruce A., 4,373,052, Cl. 524-451.000.
Lynch, Donald M.: *See—*
Lover, Myron J.; Singer, Arnold J.; Lynch, Donald M.; and Rhodes, William E., III, 4,372,977, Cl. 424-342.000.
M.A.N.-ROLAND Druckmaschinen Aktiengesellschaft: *See—*
Herzan, Georg; and Simeth, Claus, 4,372,204, Cl. 101-145.000.
Pflaum, August, 4,372,205, Cl. 101-153.000.
Rebel, Herbert, 4,372,244, Cl. 118-46.000.
MacConochie, Ian O.: *See—*
Adams, Richard R.; MacConochie, Ian O.; and Poole, Bordie D., Jr., 4,372,680, Cl. 356-51.000.
Machine Products Corporation: *See—*
Bailey, Curtis R., 4,372,039, Cl. 29-734.000.
Mack Trucks, Inc.: *See—*
Kolarik, Oldrich, 4,372,268, Cl. 123-383.000.
Madelin, Bertrand. Process for recovery of metals contained in plombiferous and/or zinciferous oxide compounds. 4,372,780, Cl. 75-14.000.
Madonia, Ciro: *See—*
Hatzikelis, Christopher; Madonia, Ciro; and Cosentino, Cesare C., 4,372,083, Cl. 49-462.000.
Maeno, Masaya: *See—*
Kitamori, Nobuyuki; Hemmi, Keizi; and Maeno, Masaya, 4,372,968, Cl. 424-280.000.
Maggi, Carlo A.: *See—*
Pestellini, Vittorio; Ghelardoni, Mario; Giannotti, Danilo; Meli, Alberto; and Maggi, Carlo A., 4,372,958, Cl. 424-253.000.
Magnaflux Corporation: *See—*
O'Connor, Donald T.; Lorenzi, Donald E.; Flaherty, John J.; and Schaefer, Edward, 4,372,658, Cl. 354-63.000.
Magnetic Peripherals Inc.: *See—*
Wickham, Thomas J., 4,372,040, Cl. 29-741.000.
Magyar, Karoly: *See—*
Benko, Pal; Bozsing, Daniel; Gundel, Janos; and Magyar, Karoly, 4,373,100, Cl. 542-439.000.
Benko, Pal; Bozsing, Daniel; Gundel, Janos; and Magyar, Karoly, 4,373,101, Cl. 542-440.000.
Mahoney, Dennis F.; Kober, Alfred E.; and Risbud, Subhash H., to Economics Laboratory Inc. Method of reducing high temperature slagging in furnaces. 4,372,227, Cl. 110-342.000.
Maier, H. Armin, to Gowin-Card, Inc.; and Tuftco Corporation. Carpet dyeing system with movable squeegee roll. 4,372,001, Cl. 8-151.000.
Major, Frederick A.: *See—*
Knapp, Paul A.; and Major, Frederick A., 4,372,068, Cl. 40-367.000.
Maklad, Mokhtar S., to EOTec Corporation. Method of manufacturing optical fibers. 4,372,767, Cl. 65-3.120.
Malachowski, Michael A.; Shur, Victor; and Thettu, Raghulinga R., to Xerox Corporation. Sheet registration actuation. 4,372,668, Cl. 355-3.00R.
Maliszewski, Theodore V., to Combustion Engineering, Inc. Electronic controller of hydraulic pressure for journal loading of bowl mill. 4,372,496, Cl. 241-37.000.
Malkin, Daniel D.: *See—*
Krasovsky, Boris P.; Melnik, Vladimir V.; and Malkin, Daniel D., 4,372,687, Cl. 368-28.000.
Manders, Logan J. Oil filter apparatus. 4,372,848, Cl. 210-90.000.
Mandle, Richard M.; and Wong, Yuan N., to Electro-Nucleonics, Inc. Chemical luminescence amplification substrate system for immunochemistry involving microencapsulated fluorescer. 4,372,745, Cl. 436-537.000.

Mandt, Mikkel G., to Clevepak Corporation. Multi stage flocculation treatment system. 4,372,851, Cl. 210-199.000.
Mann, Adriaan B., to Goudsche Machinefabriek B.V. Pipe clamp and a probing device comprising a pipe clamp. 4,372,153, Cl. 73-84.000.
Mansfield Carbon Products, Inc.: *See—*
Whitten, Charles M.; Scott, Robert H.; and Mansfield, Vaughn, 4,372,756, Cl. 48-202.000.
Mansfield, Vaughn: *See—*
Whitten, Charles M.; Scott, Robert H.; and Mansfield, Vaughn, 4,372,756, Cl. 48-202.000.
Manville Service Corporation: *See—*
Kiedaisch, Randall A.; and Cooper, Leonard M., 4,372,599, Cl. 294-87.200.
Manzione, Louis T.: *See—*
Barns, Robert L.; Chandross, Edwin A.; Flamm, Daniel L.; Manzione, Louis T.; and Thompson, Larry F., 4,372,834, Cl. 204-157.10R.
Marcatili, Enrique A.: *See—*
Liu, Pao-Lo P.; and Marcatili; Enrique A., 4,372,643, Cl. 350-96.140.
Marchitto, Alfred J., Jr.: *See—*
LaViolette, Paul A.; Caccioli, Anthony; Garcia, Alexander; Hotchkiss, Earl H.; and Marchitto, Alfred J., Jr., 4,372,016, Cl. 24-241.0PS.
Marckmann, Jean-Claude: *See—*
Kings, Donald H. M.; Marckmann, Jean-Claude; and Quang, Pham K., 4,373,016, Cl. 430-126.000.
Marconi Company Limited: *See—*
Cooper, David, 4,373,160, Cl. 343-100.0SA.
Marinkonsult Hans Lundberg AG: *See—*
Lundberg, Hans G., 4,372,242, Cl. 114-222.000.
Markert, Gerhard: *See—*
Besecke, Siegmund; Fink, Herbert; Sutterlin, Norbert; Markert, Gerhard; Schroder, Gunter; and Tilch, Willi, 4,373,056, Cl. 524-547.000.
Marks, Alvin M.; and Marks, Mortimer. High efficiency optical projector for 3D motion pictures. 4,372,656, Cl. 352-57.000.
Marks, Mortimer: *See—*
Marks, Alvin M.; and Marks, Mortimer, 4,372,656, Cl. 352-57.000.
Marpac Industries, Inc.: *See—*
Pritchitt, Frederick J., 4,372,467, Cl. 222-501.000.
Marsh, Ronald W.: *See—*
Raksanyi, William; and Marsh, Ronald W., 4,372,604, Cl. 297-162.000.
Marshall, John P.; and Ruffer, Dennis A., to Allen Group Inc. Matrix method and apparatus for engine analysis. 4,373,186, Cl. 364-551.000.
Martin, Richard T., to Applied Magnetics-Magnetic Head Division Corporation. Apparatus for accurately registering a member and a substrate in an interdependent relationship. 4,372,248, Cl. 118-720.000.
Martin, Robert A.: *See—*
Ackerman, Allen D.; Perkey, Conrad G.; Martin, Robert A.; and Justusson, William M., 4,372,112, Cl. 60-323.000.
Marton, Renata; and Brown, Alton F., to Buffalo Color Corporation. Process and apparatus for comminuting using abrasive discs in a disc refiner. 4,372,495, Cl. 241-28.000.
Marttinen, Toivo, to Enso-Gutzeit Osakeyhtio . Dispensing means for sapling control substance connected with a land clearing saw. 4,372,047, Cl. 30-123.300.
Maruyama, Shigeo: *See—*
Matsumura, Isao; Ishikawa, Yasuyuki; Maruyama, Shigeo; Hirano, Reiji; and Kohayakawa, Yoshimi, 4,372,655, Cl. 351-206.000.
Marx, Thomas O., to Atwood Vacuum Machine Co. Pneumatic spring with protective boot. 4,372,429, Cl. 188-322.120.
Maskwa, Alvin J.: *See—*
Cymbalisty, Lubomyr M.; Maskwa, Alvin J.; Trevoy, Lloyd W.; and Wojno, Jan, 4,372,174, Cl. 73-863.110.
Mason, Edwin W., to Mason Keller Corporation. Method of making an applicator package. 4,372,098, Cl. 53-412.000.
Mason Keller Corporation: *See—*
Mason, Edwin W., 4,372,098, Cl. 53-412.000.
Massachusetts General Hospital, The: *See—*
Strauss, Harry W.; Callahan, Ronald J.; and Froelich, Jerry W., 4,372,294, Cl. 128-1.100.
Massachusetts Institute of Technology: *See—*
Flemings, Merton C.; and Matsuniya, Tooru, 4,372,369, Cl. 164-482.000.
Guditz, Elis A.; and Burke, Robert L., 4,372,996, Cl. 427-328.000.
Hsieh, Jaw J., 4,372,791, Cl. 148-171.000.
Langer, Robert S.; Linhardt, Robert; Cooney, Charles L.; Galliher, Parrish M.; Flanagan, Margaret M.; and Klein, Michael D., 4,373,023, Cl. 435-2.000.
Mast, Burton T. Compressor station for arctic gas pipeline. 4,372,332, Cl. 137-1.000.
Master Modular Homes, Inc.: *See—*
del Valle, Jaime L., 4,372,906, Cl. 264-256.000.
Masukawa, Toyoaki; Ishikawa, Wataru; Okaniwa, Kenichiro; and Yamashita, Kiyoshi, to Konishiroku Photo Industry Co., Ltd. Photosensitive compound and photosensitive material containing it. 4,373,017, Cl. 430-270.000.
Material Sciences Corporation: *See—*
Rausch, John J.; and Van Thyne, Ray J., 4,372,995, Cl. 427-300.000.
Mathews, Lester R., to Mathews, Lester R.; Warner, Lucien; and Water Circulation Patents, Inc. Rotational indexing nozzle arrangement. 4,371,994, Cl. 4-490.000.
Mathia, Tadeusz G.: *See—*
Bo, Ermano; and Mathia, Tadeusz G., 4,372,781, Cl. 75-65.0ZM.
Matsumura, Akira, to Hitachi, Ltd.; and Nissan Motor Co., Ltd. Doppler radar mounting structure for motor vehicles. 4,373,161, Cl. 343-717.000.
Matsumura, Akira: *See—*
Furukawa, Junji; Furuno, Nobuo; Matsumura, Akira; and Kuwajima, Teruaki, 4,373,074, Cl. 526-92.000.
Matsumura, Isao; Ishikawa, Yasuyuki; Maruyama, Shigeo; Hirano, Reiji; and Kohayakawa, Yoshimi, to Canon Kabushiki Kaisha. Automatic eye-refractometer. 4,372,655, Cl. 351-206.000.
Matsunaga, Kenichi: *See—*
Yoshikumi, Chikao; Hirose, Fumio; Ohmura, Yoshio; Fujii, Takayoshi; Ikuzawa, Masanori; Matsunaga, Kenichi; Ando, Takao; and Ohhara, Minoru, 4,372,948, Cl. 424-180.000.
Matsuniya, Tooru: *See—*
Flemings, Merton C.; and Matsuniya, Tooru, 4,372,369, Cl. 164-482.000.
Matsuo, Hisayasu: *See—*
Watanabe, Yutaka; and Matsuo, Hisayasu, 4,373,019, Cl. 430-317.000.
Matsuo, Katsuharu, to Tokyo Shibaura Denki Kabushiki Kaisha. Washing machine. 4,372,134, Cl. 68-12.00R.
Matsuoka, Hideoki, to Nissan Motor Co., Ltd. Passive seat belt arrangement for a vehicle. 4,372,579, Cl. 280-802.000.
Matsushima, Akira. Driving device for a print head of a printer. 4,372,698, Cl. 400-320.000.
Matsushita Electric Industrial Co., Ltd.: *See—*
Shimamoto, Takeshi; Arai, Kazuo; and Kobayashi, Kazutsugu, 4,372,558, Cl. 273-238.000.
Matsushita Electric Works, Ltd.: *See—*
Ichinomiya, Tsutomu; Hosoe, Mamoru; Nagayama, Masayoshi; Chousa, Hirotaka; and Kimura, Rokusaburo, 4,372,319, Cl. 128-421.000.
Matsuzawa, Yasue: *See—*
Oki, Toshikazu; Matsuzawa, Yasue; Ishikura, Tomoyuki; Takeuchi, Tomio; and Umezawa, Hamao, 4,373,094, Cl. 536-6.400.
Mattel, Inc.: *See—*
Del Principe, Robert M.; and Reichert, David A., 4,372,557, Cl. 273-88.000.
Minkoff, Michael D.; and Chang, Richard S., 4,372,556, Cl. 273-85.00G.
Matthews, William G.; Sicard, Jean-Paul; and Anderson, Richard A., to Union Carbide Corporation. Liquid adsorption process and apparatus. 4,372,857, Cl. 210-673.000.
Mattson, Roy D. Adjustable firmness cushion with multiple layered foam-filled compartments. 4,371,997, Cl. 5-450.000.
Matuhashi, Tyoku; Usui, Mitsuko; Yamamoto, Akio; Mitsuhashi, Masakazu; and Koyama, Shunsaku, to Kabushiki Kaisha Hayashibara Seibutsu Kagaku Kenkyujo. Process for the production of vaccine. 4,372,883, Cl. 260-112.00R.
Matweyou, Stephen: *See—*
Bascom, Hollis H.; Matweyou, Stephen; Andersen, Alan J.; and Greci, John J., 4,372,801, Cl. 156-434.000.
Mauer, Michael G., Jr.: *See—*
Giordano, Anthony P.; and Mauer, Michael G., Jr., 4,372,145, Cl. 72-387.000.
Maurice Goodall (Holdings) Limited: *See—*
Goodall, Maurice, 4,372,570, Cl. 280-154.50R.
Max-Planck-Gesellschaft zur Forderung der Wissenschaften e.V.: *See—*
Ulrich, Reinhard, 4,372,685, Cl. 356-350.000.
Maxon Corporation: *See—*
Rollins, M. Jack; and Coppin, William P., 4,372,531, Cl. 251-174.000.
Mayfield, Glenn L., to United States of America, Energy. Removable, hermetically-sealing, filter attachment system for hostile environments. 4,372,853, Cl. 210-232.000.
Maylahn, Donald J.: *See—*
Drennan, Denis B.; Maylahn, Donald J.; and Schleicher, Thomas R., 4,372,300, Cl. 128-83.000.
Mayse, Weldon D.: *See—*
Watson, Frederick D.; Mayse, Weldon D.; and Franse, Albert D., 4,372,837, Cl. 204-186.000.
Mazur, Joseph S., to Eaton Corporation. Cross-flow fan for transverse engine vehicle. 4,372,409, Cl. 180-54.00A.
McBee, Leroy D.: *See—*
Bennett, Benjamin R.; McBee, Leroy D.; and Horak, Richard F., 4,372,129, Cl. 62-175.000.
McCabe, Francis J. Balancing damper with quick set adjustment bracket. 4,372,342, Cl. 137-601.000.
McCabe, Francis J. Thermally activated, automatic damper and damper operator. 4,372,485, Cl. 236-1.00G.
McCarthy, James R. Reagent for froth flotation of bituminous coal. 4,372,864, Cl. 252-61.000.
McCarthy, Shaun L.; and Lambe, John J., to Ford Motor Company. Thin film electroluminescent device. 4,373,145, Cl. 313-503.000.
McCartney, Billy R. Ice making container apparatus. 4,372,523, Cl. 249-79.000.
McClintock, Walter O.: *See—*
Lawver, James E.; McClintock, Walter O.; and Snow, Robert E., 4,372,843, Cl. 209-12.000.
McClure, B. W.: *See—*
Shannon, James A.; and McClure, B. W., 4,372,284, Cl. 124-78.000.
McColl, Bruce J., to Owens-Illinois, Inc. Independent steering and propulsion system for off road vehicle. 4,372,407, Cl. 180-6.200.

McCord, Lawless D., to Independent Transfer Equipment Co. Transfer hoist for disabled persons. 4,372,452, Cl. 212-159.000.
McCorquodale Machine Systems Limited: *See—*
Holdsworth, Alan S., 4,372,473, Cl. 227-3.000.
McCullough, Glenn R., to Shell Oil Company. Sulfur oxides removal. 4,372,927, Cl. 423-244.000.
McDonald, Gerald F., to TII Industries Inc. Line test termination device. 4,373,120, Cl. 179-175.000.
McDuffie, James W.: *See—*
McIlwain, Irwin D.; and McDuffie, James W., 4,372,103, Cl. 56-14.400.
MCF Footwear Corporation: *See—*
Adamik, Jaroslav F., 4,372,060, Cl. 36-54.000.
McGhie, Joseph A.: *See—*
Light, Kenneth K.; McGhie, Joseph A.; Fujioka, Futoshi; and Yoshida, Takao, 4,373,108, Cl. 568-817.000.
McGuerty, Jay S. Saxophone mouthpiece having reed adjustment means. 4,372,190, Cl. 84-383.00R.
McGuire-Nicholas Manufacturing Company: *See—*
Harvey, Robert P., 4,372,468, Cl. 224-268.000.
McIlwain, Irwin D.; and McDuffie, James W., to Sperry Corporation. Combine drive belt shielding. 4,372,103, Cl. 56-14.400.
McKay, Garry M.: *See—*
Gibson, David V.; McKay, Garry M.; and Swalwell, John E., 4,373,054, Cl. 524-460.000.
McKee, Arnold D.: *See—*
Simonds, Gary; and McKee, Arnold D., 4,372,285, Cl. 124-90.000.
McMillen, Bobby E., to AMBAC Industries, Incorporated. Method for making an electric motor housing with integral pole. 4,372,035, Cl. 29-596.000.
McMillen, James M., to Mobil Oil Corporation. Method for recovery of oil from tilted reservoirs. 4,372,381, Cl. 166-263.000.
McWilliams, Rose M. Method and apparatus for enumerative display and disposal of surgical sponges. 4,372,102, Cl. 53-474.000.
Mead Corporation, The: *See—*
Leib, Russel W., Jr., 4,372,600, Cl. 294-87.200.
Lewis, Edwin B.; and Moore, Roy N., Jr., 4,372,152, Cl. 73-81.000.
Mead Johnson & Company: *See—*
Wu, Yao H.; and Lobeck, Walter G., Jr., 4,372,887, Cl. 548-468.000.
Means, Rodney J.; Plunkett, Galen P., Jr, Galen P.; Dennis, Charles A.; and Moon, John L., to International Business Machines Corporation. Bus interface units sharing a common bus using distributed control for allocation of the bus. 4,373,183, Cl. 364-200.000.
Mechanical Technology Incorporated: *See—*
Dineen, John J., 4,372,116, Cl. 60-525.000.
Rauch, Jeffrey S., 4,372,115, Cl. 60-520.000.
Meeks, Thomas: *See—*
Rhoades, Craig A.; and Meeks, Thomas, 4,372,386, Cl. 166-300.000.
Mehus, Richard J., to Economics Laboratory, Inc. Fail-safe valve. 4,372,345, Cl. 137-636.000.
Meier, Wilhelm: *See—*
Krasborn, Gottfried; Roentgen, Paul; Meier, Wilhelm; and Erdweg, Josef, 4,373,130, Cl. 219-203.000.
Meininger, Fritz: *See—*
Fuchs, Hermann; Kapaun, Gustav; and Meininger, Fritz, 4,372,892, Cl. 260-458.00C.
Meismer, Richard A., to Caterpillar Tractor Co. Method and apparatus for determining cylinder liner projection. 4,372,156, Cl. 73-119.00R.
Mekosh, George, Jr., to Budd Company, The. Anti-locking brake system for a vehicle. 4,372,620, Cl. 303-99.000.
Meli, Alberto: *See—*
Pestellini, Vittorio; Ghelardoni, Mario; Giannotti, Danilo; Meli, Alberto; and Maggi, Carlo A., 4,372,958, Cl. 424-253.000.
Melnik, Vladimir V.: *See—*
Krasovsky, Boris P.; Melnik, Vladimir V.; and Malkin, Daniel D., 4,372,687, Cl. 368-28.000.
Memering, Leroy J., to National Distillers & Chemical Corp. Polyvinyl chloride containing vinyl acetate-ethylene copolymer as impact strength modifier. 4,373,051, Cl. 524-427.000.
Menasha Corporation: *See—*
Le Grand, Alexander J.; and Barnhouse, Richard A., 4,372,444, Cl. 206-505.000.
Menges, Georg; Kircher, Klaus; and Franzkoch, Bernd, to Paul Troester Maschinenfabrik. Process of crosslinking electrical insulators of plastic or rubber. 4,372,898, Cl. 264-22.000.
Mennicken, Gerhard: *See—*
Nachtkamp, Klaus; Bock, Manfred; Mennicken, Gerhard; and Pedain, Josef, 4,373,081, Cl. 528-45.000.
Menzel, Guenther, to Siemens Aktiengesellschaft. Process for producing coarse-grain crystalline/mono-crystalline metal and alloy films. 4,372,989, Cl. 427-53.100.
Merck & Co., Inc.: *See—*
Christensen, Burton G.; and Shih, David H., 4,372,965, Cl. 424-274.000.
Yin, Robert I., 4,373,011, Cl. 428-537.000.
Merrill Manufacturing Company: *See—*
Anderson, Stephen J., 4,372,339, Cl. 137-288.000.
Messerschmitt-Boelkow-Blohm Gesellschaft mit beschraenkter Haftung: *See—*
Brunsch, Klaus; Herkert, Claus-Michael; and Thomamueller, Dieter, 4,372,795, Cl. 156-155.000.
Mesta Machine Company: *See—*
Petros, Andrew J., 4,372,625, Cl. 384-129.000.
Petros, Andrew J., 4,372,626, Cl. 384-129.000.
Metacon AG: *See—*
Dur, Bernhard, 4,372,537, Cl. 266-45.000.
Metallgesellschaft Aktiengesellschaft: *See—*
Bielz, Siegfried; Janisch, Paul; and Lohrberg, Karl, 4,372,939, Cl. 423-478.000.
Metallwerk Max Brose GmbH & Co.: *See—*
Rampel, Hans; Hess, Peter; and Schulz, Volkmar, 4,372,521, Cl. 248-430.000.
Meyer, Franz J.: *See—*
Dengler, Robert; and Meyer, Franz J., 4,373,171, Cl. 360-71.000.
Michael, Farid Y. Surface ship having improved speed and maneuverability. 4,372,240, Cl. 114-56.000.
Michel, Gudrun: *See—*
Seipp, Ulrich; Vollenberg, Werner; Mueller, Bernd; and Michel, Gudrun, 4,372,971, Cl. 424-285.000.
Mickelson, Thorwald J., to Transportation Security Inc. Lock protecting hasp. 4,372,136, Cl. 70-14.000.
Micro-Plate, Inc.: *See—*
Eidschun, Charles D., 4,372,825, Cl. 204-27.000.
Miedema, Hotze: *See—*
Karabinis, Peter D.; and Miedema, Hotze, 4,373,210, Cl. 455-273.000.
Miles, Peter D.: *See—*
Durant, Graham J.; and Miles, Peter D., 4,372,963, Cl. 424-272.000.
Miller, Donald E., to Continental Group, Inc., The. Press motion dampener. 4,372,146, Cl. 72-453.130.
Miller, Franklyn D.: *See—*
Muller, Werner C.; and Miller, Franklyn D., 4,372,822, Cl. 203-19.000.
Miller, Gerald D., to Air Products and Chemicals, Inc. Flushable towelette. 4,372,447, Cl. 206-812.000.
Miller, Harold M., to American Optical Corporation. Contact lens sterilizing apparatus. 4,372,917, Cl. 422-116.000.
Miller, Harold N., to Exxon Research & Engineering Co. Oil-soluble metal containing sulfonated polymers useful as oil additives. 4,372,862, Cl. 252-33.000.
Miller, Jack E., to Big Inch Marine Systems, Inc. Coupling for coupling tubular elements. 4,372,584, Cl. 285-18.000.
Miller, John P. K., IV; and Breazeale, Benjamin T., II. Combined casket and burial vault assembly with stackable components. 4,372,018, Cl. 27-35.000.
Miller, Robert A.; Larson, Kenneth W.; and Schopen, Joseph L., to Baxter Travenol Laboratories, Inc. Process and apparatus for compounding hyperalimentation solutions. 4,372,100, Cl. 53-428.000.
Miller, Stewart E., to Bell Telephone Laboratories, Incorporated. Optical fiber with enhanced mode coupling. 4,372,645, Cl. 350-96.300.
Mills, David A.; and Turner, Norris G., to E-Systems, Inc. Tracking in a distribution system. 4,373,185, Cl. 364-478.000.
Minigrip, Inc.: *See—*
Herz, Andre M., 4,372,793, Cl. 156-66.000.
Minkoff, Michael D.; and Chang, Richard S., to Mattel, Inc. Electronic soccer game. 4,372,556, Cl. 273-85.00G.
Minnesota Mining and Manufacturing Company: *See—*
Boeder, Charles W., 4,373,077, Cl. 526-309.000.
Brochman, Wilfred R.; Hannula, Rodney R.; and Jorgensen, Bradley H., 4,372,460, Cl. 220-258.000.
Fritze, Gary D.; and Graham, Joseph, 4,372,997, Cl. 428-144.000.
Geisler, Thomas C., 4,372,582, Cl. 282-27.500.
Haskett, Thomas E.; and Schmitt, Joseph J., 4,373,127, Cl. 219-69.00E.
Kellie, Truman F., 4,372,649, Cl. 350-162.0SF.
Winslow, John M., 4,373,020, Cl. 430-339.000.
Minolta Camera Co., Ltd.: *See—*
Miyata, Shin; Kono, Tateomi; Shibazaki, Kenji; and Utsunomiya, Yoichi, 4,372,676, Cl. 355-14.00C.
Minot, Etienne: *See—*
Naturel, Christian; and Minot, Etienne, 4,372,494, Cl. 239-553.300.
Misiorny, Alfons: *See—*
Helgstrand, Ake J. E.; Johannson, Karl N.; Misiorny, Alfons; Noren, Jan O.; and Stening, Goran, 4,372,894, Cl. 260-941.000.
Misura, John T.: *See—*
Champlin, Charles L.; Misura, John T.; and Reiser, Carl J., 4,372,763, Cl. 55-501.000.
Mitchell, John A.: *See—*
Luebke, Clement J.; Mitchell, John A.; and Daniels, Lowell W., 4,372,980, Cl. 426-231.000.
Mitchell, Robert K.; and Catterson, Robert K., to Briggs & Stratton Corporation. Combination clutch/brake mechanism. 4,372,433, Cl. 192-18.00R.
Mitchell, Terry L.; and Russell, Robert L. Tilt-out box for mail and the like. 4,372,480, Cl. 232-28.000.
Mitsubishi Denki Kabushiki Kaisha: *See—*
Kato, Masaru, 4,372,783, Cl. 75-246.000.
Mitsubishi Gas Chemical Company, Inc.: *See—*
Ikeguchi, Nobuyuki, 4,373,086, Cl. 528-322.000.
Mitsubishi Kinzoku Kabushiki Kaisha: *See—*
Yoshizumi, Motohiko, 4,373,013, Cl. 428-570.000.
Mitsuhashi, Masakazu: *See—*
Matuhashi, Tyoku; Usui, Mitsuko; Yamamoto, Akio; Mitsuhashi, Masakazu; and Koyama, Shunsaku, 4,372,883, Cl. 260-112.00R.
Miya, Tetsuo: *See—*
Okamoto, Katsunari; Edahiro, Takao; Kawana, Akio; and Miya, Tetsuo, 4,372,647, Cl. 350-96.330.
Miyata, Shin; Kono, Tateomi; Shibazaki, Kenji; and Utsunomiya, Yoichi, to Minolta Camera Co., Ltd. Electrophotographic copying machine. 4,372,676, Cl. 355-14.00C.

Miyatake, Takashi: *See—*
Tahara, Susumu; Nishihira, Keigo; Miyatake, Takashi; Sawada, Hiroyuki; and Kita, Junichiro, 4,373,107, Cl. 564-473.000.
Miyazaki, Masayuki: *See—*
Yukawa, Koji; Miyazaki, Masayuki; and Murahashi, Takashi, 4,372,674, Cl. 355-14.00D.
Miyazaki, Yasunosuke: *See—*
Kubo, Kunimichi; Yoshikawa, Mamoru; Watanabe, Motokazu; Miyazaki, Yasunosuke; and Miyoshi, Mituji, 4,372,919, Cl. 422-137.000.
Miyoshi, Mituji: *See—*
Kubo, Kunimichi; Yoshikawa, Mamoru; Watanabe, Motokazu; Miyazaki, Yasunosuke; and Miyoshi, Mituji, 4,372,919, Cl. 422-137.000.
Mizota, Yasuhiro, to Nippon Electric Co., Ltd. Radio subscriber system with efficient use of radio frequency carrier waves. 4,373,205, Cl. 455-86.000.
Mizukami, Mineo; and Konishi, Tatsuo, to Nippon Electric Co., Ltd. Digital time-base corrector having a wide correction range. 4,373,168, Cl. 358-19.000.
Mizuma, Kenichi: *See—*
Yanagawa, Nobuyuki; and Mizuma, Kenichi, 4,372,547, Cl. 271-10.000.
Mizuno, Akira, to Nikko Kogyo Kabushiki Kaisha. Cable holder. 4,373,112, Cl. 174-65.00R.
Mizushima, Sadao: *See—*
Tsuchiya, Toshio; Enokimoto, Akito; Mizushima, Sadao; and Takano, Suwaji, 4,372,602, Cl. 296-78.00R.
Mizushima, Yoichi; and Hosonaga, Taketoshi, to Nissan Motor Co., Ltd. Forwardly inclining seat. 4,372,607, Cl. 297-325.000.
Mo och Domsjo Aktiebolag: *See—*
Samuelson, Hans O.; and Abrahamsson, Kjell E., 4,372,811, Cl. 162-38.000.
Mobil Oil Corporation: *See—*
McMillen, James M., 4,372,381, Cl. 166-263.000.
Oleck, Stephen M.; and Wilson, Robert C., Jr., 4,372,839, Cl. 208-59.000.
Paul, James M.; and Espenscheid, Wilton F., 4,372,616, Cl. 299-5.000.
Mocquet, Gisele C.: *See—*
Langlois, Michel; Lacour, Alain P.; Bucher, Bernard P.; and Mocquet, Gisele C., 4,372,967, Cl. 424-279.000.
Modrovich, Ivan E. Stabilization of hydrolysis prone labile organic reagents in liquid media. 4,372,874, Cl. 436-176.000.
Moffitt, Merritt L., Jr. Suction pump reservoir brush. 4,372,700, Cl. 401-157.000.
Mohan, William L.; Willits, Samuel P.; and Kleeman, Thomas E., to Spartanics, Ltd. Pitch matching detecting and counting system. 4,373,135, Cl. 377-8.000.
Molineus, Tilman: *See—*
Schumacher, Hermann; Molineus, Tilman; and Ridder, Detlef, 4,372,581, Cl. 282-27.500.
Molins Limited: *See—*
Dowding, John G.; Turner, Peter R.; and Hudson, Robert J., 4,373,188, Cl. 364-552.000.
Dyett, Derek H.; and Thorp, Neil, 4,372,327, Cl. 131-95.000.
Molisani, Justin J.: *See—*
Cook, Sanford L.; Molisani, Justin J.; and Dennison, Kenneth I., Jr., 4,372,591, Cl. 292-221.000.
Monarch Marking Systems, Inc.: *See—*
Pou, Frederick M., 4,372,696, Cl. 400-124.000.
Monsanto Company: *See—*
LeClair, Francis J.; and Surgant, John M., 4,372,777, Cl. 71-93.000.
Montedison S.p.A.: *See—*
Gratani, Francesco; Nelli, Giuseppe; Di Battista, Piero; and Cicchetti, Osvaldo, 4,373,042, Cl. 524-100.000.
Montgomery, James W.: *See—*
Baugh, John L.; Montgomery, James W.; and Roach, Malcolm B., 4,372,390, Cl. 166-373.000.
Moon, John L.: *See—*
Means, Rodney J.; Plunkett, Galen P., Jr, Galen P.; Dennis, Charles A.; and Moon, John L., 4,373,183, Cl. 364-200.000.
Moore, Albert R., to Burger King Corporation. Condiment dispenser. 4,372,354, Cl. 141-361.000.
Moore & Hanks Co.: *See—*
Bennett, Benjamin R.; McBee, Leroy D.; and Horak, Richard F., 4,372,129, Cl. 62-175.000.
Moore, Michael J.; and Studley, Charles F., Jr., to Good Earth Growers, Inc. Multi-wheeled transporter and conveying vehicle. 4,372,725, Cl. 414-460.000.
Moore, Roy N., Jr.: *See—*
Lewis, Edwin B.; and Moore, Roy N., Jr., 4,372,152, Cl. 73-81.000.
Moran, Michael E.: *See—*
Welch, Joseph J.; Grove, William C.; and Moran, Michael E., 4,372,517, Cl. 248-267.000.
Moraw, Klaus; and Paul, Hans-Gunther, to Rutgerswerke Aktiengesellschaft. Asbestos-free friction material. 4,373,038, Cl. 523-156.000.
Moreau, Pierre D.; and Jonsson, Nils A. Moroxydine phenoxyisobutyrates and method of use. 4,372,954, Cl. 424-248.530.
Morgan, Steven R.; and Carlson, Linda A., to Volleyball World, Inc. Volleyball practice apparatus. 4,372,561, Cl. 273-411.000.
Mori, Fumio: *See—*
Kunimoto, Go; Ichinose, Isao; Suzuki, Noboru; and Mori, Fumio, 4,372,457, Cl. 215-228.000.
Morikawa, Shinsuke: *See—*
Oda, Yoshio; Otouma, Hiroshi; Uchida, Keiichi; Morikawa, Shinsuke; and Ikemura, Masaaki, 4,372,938, Cl. 423-469.000.
Morinaka, Akira: *See—*
Asano, Yoshihiro; Morinaka, Akira; and Murase, Kei, 4,373,004, Cl. 428-328.000.
Morita, Katsuhiko: *See—*
Toriyama, Kazuhisa; Nakagomi, Tamihito; Sato, Hisato; Fujita, Yutaka; Morita, Katsuhiko; and Arai, Yoshi, 4,372,871, Cl. 252-299.610.
Morita, Yousuke: *See—*
Hagiwara, Miyuki; and Morita, Yousuke, 4,373,046, Cl. 524-285.000.
Morris, James F., to United States of America, National Aeronautics and Space Administration. Heat pipes containing alkali metal working fluid. 4,372,377, Cl. 165-104.260.
Morris, James F., to United States of America, National Aeronautics and Space Administration. Thermionic energy converters. 4,373,142, Cl. 310-306.000.
Morris, Jesse L.: *See—*
Sugalski, Raymond K.; Leduc, Kenneth C.; and Morris, Jesse L., 4,373,129, Cl. 219-79.000.
Morrison, Jon R. Process and system for anaerobic treatment of waste. 4,372,856, Cl. 210-603.000.
Morse, Randall L., to Trafcon, Inc. Traffic barricade. 4,372,536, Cl. 256-64.000.
Morton, James W., to General Electric Company. Apparatus for providing an electrical coil with leads. 4,372,029, Cl. 29-564.400.
Mosing, Donald E. Method and apparatus for connecting and disconnecting tubular members. 4,372,026, Cl. 29-426.500.
Motonami, Masanao; Ogawa, Hisashi; and Imai, Yoshikazu, to Toyota Jidosha Kogyo Kabushiki Kaisha. Automatic seatbelt system. 4,372,580, Cl. 280-802.000.
Motorola, Inc.: *See—*
Beesley, Graham E., 4,373,139, Cl. 307-350.000.
Feder, Alvin, 4,373,119, Cl. 179-110.00A.
Fette, Bruce A.; Harte, Bruce D.; and Tennyson, Bill E., 4,373,191, Cl. 364-724.000.
Motoyama, Kazuyasu; and Nakao, Toshihiro, to Olympus Optical Co., Ltd. Tape recorder. 4,373,172, Cl. 360-105.000.
Mouri, Yasunori: *See—*
Ishii, Toshio; Mouri, Yasunori; Abe, Osamu; and Hasegawa, Taiji, 4,373,187, Cl. 364-431.060.
Mouzin, Gilbert; Cousse, Henri; Stenger, Antoine; and Casadio, Sylvano, to Pierre Fabre SA. Substituted 2-benzoyl-4-chloroglycinanilide derivatives, a process for their production, and their use as medicaments. 4,372,975, Cl. 424-324.000.
Muchnik, Shimon: *See—*
Kaganovsy, Yaacov; Kustanovich, Yosef; Shmuter, Shimshon; Gelfer, Vadim; and Muchnik, Shimon, 4,372,818, Cl. 202-83.000.
Mueller, Bernd: *See—*
Seipp, Ulrich; Vollenberg, Werner; Mueller, Bernd; and Michel, Gudrun, 4,372,971, Cl. 424-285.000.
Mueller, William A.; Ingham, John D.; and Reilly, William W., to United States of America, National Aeronautics and Space Administration. Elastomer coated fillers and composites thereof comprising at least 60% by wt. of a hydrated filler and an elastomer containing an acid substituent. 4,373,039, Cl. 523-205.000.
Muetterties, Andrew J.: *See—*
Genese, Joseph N.; and Muetterties, Andrew J., 4,372,306, Cl. 128-214.00G.
Mullane, John C., Jr.: *See—*
Klee, David J.; Lovette, Norris G., Jr.; Ruprecht, David R.; Boyle, John F.; and Mullane, John C., Jr., 4,372,130, Cl. 62-330.000.
Muller, Jakob, to Textilma AG. Pusher needle. 4,372,133, Cl. 66-120.000.
Muller, Werner C.; and Miller, Franklyn D., to National Distillers & Chemical Corp. Production of anhydrous ethanol. 4,372,822, Cl. 203-19.000.
Murahashi, Takashi: *See—*
Yukawa, Koji; Miyazaki, Masayuki; and Murahashi, Takashi, 4,372,674, Cl. 355-14.00D.
Murakami Kaimeido Co., Ltd.: *See—*
Yamana, Toru, 4,372,177, Cl. 74-501.00M.
Murakami, Kunio, to Enshu Limited. Tool transfer arm assembly for automatic milling machines. 4,372,728, Cl. 414-590.000.
Murase, Kei: *See—*
Asano, Yoshihiro; Morinaka, Akira; and Murase, Kei, 4,373,004, Cl. 428-328.000.
Muraviev, Gennady A.; and Kublanovsky, Lev B. Automatic fault locating apparatus for a pressurized pipeline. 4,372,151, Cl. 73-40.50A.
Muroi, Masayuki: *See—*
Higashide, Eiji; Tanida, Seiichi; Muroi, Masayuki; and Asai, Mitsuko, 4,373,028, Cl. 435-253.000.
Murphy, Michael. Auxiliary scaffolding attachment. 4,372,425, Cl. 182-179.000.
Murphy, William L.: *See—*
Haasl, Michael J.; Snider, Kenneth D.; and Murphy, William L., 4,372,982, Cl. 426-549.000.
Musillo, Robert. Earring with latch member. 4,372,131, Cl. 63-12.000.
Myerly, R. S.: *See—*
Brown, Leo F.; and Myerly, R. S., 4,372,199, Cl. 99-341.000.
Myers, John L.; Benscoter, Richard D.; Chambers, Bruce B.; and Dyar, Ralph E., to Butler Manufacturing Company. Service poles. 4,373,111, Cl. 174-48.000.

Myers, John W., to Hemco Wire Products, Inc. Wire tree baskets and a method and apparatus for forming same. 4,372,351, Cl. 140-112.000.

Mykkanen, C. Fred, to Honeywell Inc. Apparatus to dissipate static electricity. 4,373,175, Cl. 361-220.000.

N-S-W Corporation: *See—*
- Tinsley, James M., 4,372,181, Cl. 81-57.390.

Naaktgeboren, Adrianus: *See—*
- De Coene, Frans J. G. C.; Naaktgeboren, Adrianus; and Vansteelant, Marc G., 4,372,723, Cl. 414-111.000.

Nachtkamp, Klaus; Bock, Manfred; Mennicken, Gerhard; and Pedain, Josef, to Bayer Aktiengesellschaft. Coating compositions and process for the production of polyurethane coatings. 4,373,081, Cl. 528-45.000.

Naevestad, Roy, to Wilputte Corporation. Chuck door for coke oven pusher side door and heat radiation shield. 4,372,820, Cl. 202-248.000.

Naffa, Faisal A., to AAR Corp. Punch type release lock. 4,372,715, Cl. 410-79.000.

Nagayama, Masayoshi: *See—*
- Ichinomiya, Tsutomu; Hosoe, Mamoru; Nagayama, Masayoshi; Chousa, Hirotaka; and Kimura, Rokusaburo, 4,372,319, Cl. 128-421.000.

Nagy, Peter L.: *See—*
- Takacs, Kalman; Papp, Maria H.; Kovacs, Gabor; Ajzert, Ilona K.; Simay, Antal; Nagy, Peter L.; Puskas, Marian E.; Sebestyen, Gyula; Stadler, Istvan; and Sumeghy, Zoltan, 4,373,104, Cl. 546-145.000.

Nahum, Sylvain. Articulated bed. 4,371,996, Cl. 5-69.000.

Nakabayashi, Masao: *See—*
- Kodama, Yutaka; Oyama, Kaoru; Shimizu, Ryusaku; Nakabayashi, Masao; Nakashima, Yoshifumi; Sano, Takashi; Shibata, Masaaki; and Goden, Kiyoshi, 4,372,949, Cl. 424-199.000.

Nakagawa, Kazuyuki: *See—*
- Uchida, Minoru; Nishi, Takao; and Nakagawa, Kazuyuki, 4,372,953, Cl. 424-248.500.

Nakagomi, Tamihito: *See—*
- Toriyama, Kazuhisa; Nakagomi, Tamihito; Sato, Hisato; Fujita, Yutaka; Morita, Katsuhiko; and Arai, Yoshi, 4,372,871, Cl. 252-299.610.

Nakai, Fumio: *See—*
- Sakano, Hajime; Nakai, Fumio; and Tomari, Yukio, 4,373,063, Cl. 525-64.000.

Nakao, Toshihiro: *See—*
- Motoyama, Kazuyasu; and Nakao, Toshihiro, 4,373,172, Cl. 360-105.000.

Nakashima, Norihiko: *See—*
- Yagi, Kazuhisa; Suzuki, Sho; and Nakashima, Norihiko, 4,373,043, Cl. 524-130.000.

Nakashima, Yoshifumi: *See—*
- Kodama, Yutaka; Oyama, Kaoru; Shimizu, Ryusaku; Nakabayashi, Masao; Nakashima, Yoshifumi; Sano, Takashi; Shibata, Masaaki; and Goden, Kiyoshi, 4,372,949, Cl. 424-199.000.

Nakazato, Eiji: *See—*
- Takizawa, Junichi; Kojima, Seiichiro; Satoh, Nobuo; and Nakazato, Eiji, 4,372,578, Cl. 280-802.000.

Namsick, Raymond J.: *See—*
- Knaus, Ernest; Liggett, Paul E.; and Namsick, Raymond J., 4,372,533, Cl. 254-93.0HP.

Narasimhan, Mandayam J., Jr.; and Thirmulachar, Mandayam J., to Source Technology, Inc. Liquid fuel for use in internal combustion engines. 4,372,753, Cl. 44-52.000.

National Can Corporation: *See—*
- Cochran, Donald D., 4,372,455, Cl. 215-100.00A.

National Distillers & Chemical Corp.: *See—*
- Memering, Leroy J., 4,373,051, Cl. 524-427.000.
- Muller, Werner C.; and Miller, Franklyn D., 4,372,822, Cl. 203-19.000.

Naturel, Christian; and Minot, Etienne, to Carbonisation Entreprise et Ceramique (C.E.C.). Spray nozzle. 4,372,494, Cl. 239-553.300.

NCR Corporation: *See—*
- Chiao, Samuel Y., 4,372,033, Cl. 29-571.000.

Neale, Adeline I., executrix: *See—*
- Ikin, John B.; and Neale, Denis M., deceased, 4,372,678, Cl. 355-37.000.

Neale, Denis M., deceased: *See—*
- Ikin, John B.; and Neale, Denis M., deceased, 4,372,678, Cl. 355-37.000.

Neathery, David O.: *See—*
- Kincheloe, David W.; and Neathery, David O., 4,372,503, Cl. 242-183.000.

Neder, Gunter: *See—*
- Kiener, Heinz; Neder, Gunter; and Schurger, Ranier, 4,372,628, Cl. 308-187.100.

Nees, Stephan. Device for cultivation of matrix-bound biologic cell systems. 4,373,029, Cl. 435-286.000.

Neilson, William J., to Smith International, Inc. Dynamic O-ring seal. 4,372,624, Cl. 384-94.000.

Nejedly, Pavel: *See—*
- Landa, Vaclav; Vitek, Jaromir; Nejedly, Pavel; Holpuch, Vladimir; Bubelis, Juozas; and Stepanovicius, Atanas-Nemezyus, 4,372,826, Cl. 204-43.00T.

Nelli, Giuseppe: *See—*
- Gratani, Francesco; Nelli, Giuseppe; Di Battista, Piero; and Cicchetti, Osvaldo, 4,373,042, Cl. 524-100.000.

Nelson, Charles W., to Apollo Hair Systems, Inc. Method and apparatus for attachment of hair units. 4,372,330, Cl. 132-53.000.

Nelson, Paul A.; and Horowitz, Jeffrey S., to United States of America, Energy. Heat pump apparatus. 4,372,376, Cl. 165-104.120.

Nenninger, Klaus; and Van Rijckevorsel, Rainer, to Clinicon Mannheim GmbH. Medical test strip holding device. 4,372,682, Cl. 356-244.000.

Nestler, Michael: *See—*
- Aurich, Horst; Bochmann, Brigitta; Grosse, Klaus; Kohler, Eberhard; Nestler, Michael; Ochsenfarth, Hans-Christian; and Seyfarth, Gerhard, 4,372,548, Cl. 271-18.300.

Neti, Radhakrishna M.; and Rocks, Raymond E., to Beckman Instruments, Inc. Fluorescent sulfur dioxide analyzer having an improved sulfur dioxide generator. 4,372,915, Cl. 422-91.000.

Neumann, Peter; Elser, Wolfgang; Bock, Gustav; and Kermer, Wolf-Dieter, to BASF Aktiengesellschaft. Isoindoline dyes, their preparation and use. 4,373,102, Cl. 544-143.000.

Neuzil, Richard W.; and Priegnitz, James W., to UOP Inc. Process for the isomerization of glucose. 4,373,025, Cl. 435-94.000.

Neuzil, Richard W.: *See—*
- Kulprathipanja, Santi; and Neuzil, Richard W., 4,372,876, Cl. 252-430.000.

New York University: *See—*
- Fish, Irving; Schwartz, Stephen A.; and Samuels, Stanley, 4,372,974, Cl. 424-319.000.

Newkirk, David D.; and Wilhoit, Darrel L., to Crown Zellerbach Corporation. Method for upgrading paper and the product formed thereby. 4,372,815, Cl. 162-158.000.

Newman, Fred C., to Continental Group, Inc., The. Annular seam between two container body halves. 4,372,459, Cl. 220-76.000.

Newton, Charles L.; and Fuini, Dennis L., to Air Products and Chemicals, Inc. Recovery of power from the vaporization of natural gas. 4,372,124, Cl. 60-648.000.

NGK Insulators, Ltd.: *See—*
- Kaneno, Masayuki; and Kajihara, Takehiro, 4,373,030, Cl. 501-152.000.

NGK Spark Plug Co., Ltd.: *See—*
- Toda, Nobuhiro; and Yamada, Masahiko, 4,372,824, Cl. 204-25.000.

NHK Spring Co., Ltd.: *See—*
- Inoue, Kanji, 4,372,576, Cl. 280-689.000.

Nichol, Charles A.: *See—*
- Duch, David S.; Nichol, Charles A.; and Sigel, Carl W., 4,372,957, Cl. 424-251.000.

Nicholas, James E. Outside combustion air unit for masonry fireplace. 4,372,288, Cl. 126-143.000.

Nicholson, Terence P. Gaskets for cylinder heads. 4,372,564, Cl. 277-235.00B.

Nieh, Edward C. Y., to Texaco Inc. Vanadium-amine corrosion inhibitor system for sour gas conditioning solutions. 4,372,873, Cl. 252-389.00R.

Nielsen, Flemming S. Method for the manufacturing of fuel briquettes. 4,372,749, Cl. 44-1.00D.

Nielsen, Olympia. Insole. 4,372,057, Cl. 36-10.000.

Niigata, Kunihiro: *See—*
- Imai, Kazuo; Niigata, Kunihiro; Fujikura, Takashi; Hashimoto, Shinichi; and Takenaka, Toichi, 4,373,106, Cl. 564-85.000.

Niimura, Koichi: *See—*
- Yoshikumi, Chikao; Fujii, Takayoshi; Saito, Kenichi; Fujii, Masahiko; and Niimura, Koichi, 4,372,890, Cl. 260-429.00R.

Nikko Kogyo Kabushiki Kaisha: *See—*
- Mizuno, Akira, 4,373,112, Cl. 174-65.00R.

Nilsson, Claes T.: *See—*
- Jakobsen, Kjell M.; and Nilsson, Claes T., 4,372,908, Cl. 264-292.000.

Nippon Electric Co., Inc.: *See—*
- Suzuki, Yoshiharu; and Kai, Tomokazu, 4,373,206, Cl. 455-103.000.

Nippon Electric Co., Ltd.: *See—*
- Mizota, Yasuhiro, 4,373,205, Cl. 455-86.000.
- Mizukami, Mineo; and Konishi, Tatsuo, 4,373,168, Cl. 358-19.000.

Nippon Oil Company, Limited: *See—*
- Kubo, Kunimichi; Yoshikawa, Mamoru; Watanabe, Motokazu; Miyazaki, Yasunosuke; and Miyoshi, Mituji, 4,372,919, Cl. 422-137.000.

Nippon Paint Co., Ltd.: *See—*
- Furukawa, Junji; Furuno, Nobuo; Matsumura, Akira; and Kuwajima, Teruaki, 4,373,074, Cl. 526-92.000.

Nippon Seiko Kabushiki Kaisha: *See—*
- Iwatani, Nobuo, 4,372,223, Cl. 108-143.000.

Nippon Steel Corporation: *See—*
- Asai, Yoshihiko; Hori, Masao; and Tokumitsu, Naoki, 4,373,128, Cl. 219-73.110.

Nippon Telegraph & Telephone Public Corporation: *See—*
- Asano, Yoshihiro; Morinaka, Akira; and Murase, Kei, 4,373,004, Cl. 428-328.000.
- Okamoto, Katsunari; Edahiro, Takao; Kawana, Akio; and Miya, Tetsuo, 4,372,647, Cl. 350-96.330.

Nis, John R.: *See—*
- Coucoulas, Alexander; and Nis, John R., 4,372,771, Cl. 65-75.000.

Nisenson, Jules: *See—*
- Waine, Martin; and Nisenson, Jules, 4,372,432, Cl. 192-8.00C.

Nishi, Takao: *See—*
- Uchida, Minoru; Nishi, Takao; and Nakagawa, Kazuyuki, 4,372,953, Cl. 424-248.500.

Nishihira, Keigo: *See—*
- Tahara, Susumu; Nishihira, Keigo; Miyatake, Takashi; Sawada, Hiroyuki; and Kita, Junichiro, 4,373,107, Cl. 564-473.000.

Nishina, Yasuhide: *See—*
- Imada, Kiyoshi; Ueno, Susumu; Nishina, Yasuhide; and Nomura, Hirokazu, 4,372,986, Cl. 427-40.000.

Nissan Motor Co., Ltd.: *See—*
- Kitakami, Toshiyuki; and Akiyama, Yoshinori, 4,372,613, Cl. 297-481.000.
- Matsumura, Akira, 4,373,161, Cl. 343-717.000.
- Matsuoka, Hideoki, 4,372,579, Cl. 280-802.000.
- Mizushima, Yoichi; and Hosonaga, Taketoshi, 4,372,607, Cl. 297-325.000.
- Sano, Isao; and Kanamori, Hiroshi, 4,373,153, Cl. 340-87.000.
- Shimizu, Michiro; and Tsunoda, Masakazu, 4,373,116, Cl. 179-1.0SM.
- Takase, Sadao, 4,372,274, Cl. 123-491.000.
- Watanabe, Takeshi, 4,372,701, Cl. 403-24.000.

Nolte, Kenneth G.: *See—*
- Smith, Michael B.; and Nolte, Kenneth G., 4,372,380, Cl. 166-250.000.

Nomura, Hirokazu: *See—*
- Imada, Kiyoshi; Ueno, Susumu; Nishina, Yasuhide; and Nomura, Hirokazu, 4,372,986, Cl. 427-40.000.

Nonaka, Hirohiko: *See—*
- Yamagami, Seiji; Nonaka, Hirohiko; Shimonaru, Tuneyoshi; Takashima, Koichi; and Kato, Yasuhiko, 4,372,846, Cl. 210-86.000.

Noonan, D. Thomas, to Xerox Corporation. CRT Housing support and rocking tilt apparatus. 4,372,515, Cl. 248-178.000.

Nordica S.p.A.: *See—*
- Pozzobon, Alessandro, 4,372,061, Cl. 36-117.000.

Nordson Corporation: *See—*
- Harjar, Martin J.; and Noss, Jeffrey S., 4,372,721, Cl. 414-5.000.

Noren, Jan O.: *See—*
- Helgstrand, Ake J. E.; Johannson, Karl N.; Misiorny, Alfons; Noren, Jan O.; and Stening, Goran, 4,372,894, Cl. 260-941.000.

Noss, Jeffrey S.: *See—*
- Harjar, Martin J.; and Noss, Jeffrey S., 4,372,721, Cl. 414-5.000.

Notarione, Patrick D.; Turk, Ronald K.; and Grafius, Gerald, to Swanson-Erie Corporation. Apparatus and method for feeding thin parts. 4,372,463, Cl. 221-10.000.

Novex Foreign Trade Co. Ltd. for Development and Commercialization of Inventions: *See—*
- Szereday, Pal, 4,372,854, Cl. 210-242.300.

Nuzzo, Benjamin: *See—*
- Barnett, Lawrence; Cordoba, Julio; and Nuzzo, Benjamin, 4,372,419, Cl. 180-289.000.

Nyquist, Lawrence M. Shelf mounting bracket and assembly. 4,372,516, Cl. 248-235.000.

Oberley, William J., to Koppers Company, Inc. Non-resinous, uncured tire retardant and products produced therewith. 4,373,010, Cl. 428-532.000.

Oberstrass, Detlev, to Barmag Barmer Maschinenfabrik AG. Drive system for yarn false twisting apparatus. 4,372,106, Cl. 57-334.000.

Occidental Engineering Corporation: *See—*
- Chapman, Wilson M.; and Jensen, Norman L., Jr., 4,372,751, Cl. 44-2.000.

Occidental Oil Shale, Inc.: *See—*
- Ricketts, Thomas E., 4,372,615, Cl. 299-2.000.

Occidental Research Corporation: *See—*
- Parziale, Victor E.; Dines, Martin B.; and DiGiacomo, Peter M., 4,373,079, Cl. 528-9.000.

Ochsenfarth, Hans-Christian: *See—*
- Aurich, Horst; Bochmann, Brigitta; Grosse, Klaus; Kohler, Eberhard; Nestler, Michael; Ochsenfarth, Hans-Christian; and Seyfarth, Gerhard, 4,372,548, Cl. 271-18.300.

O'Connor, Donald T.; Lorenzi, Donald E.; Flaherty, John J.; and Schaefer, Edward, to Magnaflux Corporation. Pipeline inspection apparatus. 4,372,658, Cl. 354-63.000.

Oda, Yoshio; Otouma, Hiroshi; Uchida, Keiichi; Morikawa, Shinsuke; and Ikemura, Masaaki, to Asahi Glass Company Ltd. Producing sulfur tetrafluoride using amine/hydrogen fluoride complex. 4,372,938, Cl. 423-469.000.

Odermann, Charles R.; and Wurst, John W., to Singer Company, The. Buttonhole paddle switch position sensing arrangement in a sewing machine. 4,372,231, Cl. 112-158.00B.

Odermann, Charles R., to Singer Company, The. Safety general purpose presser foot for straight and zig zag stitching. 4,372,233, Cl. 112-235.000.

Oerlikon-Buhrle U.S.A. Inc.: *See—*
- Sarcia, Domenico S., 4,372,128, Cl. 62-6.000.

Ogawa, Hisashi: *See—*
- Motonami, Masanao; Ogawa, Hisashi; and Imai, Yoshikazu, 4,372,580, Cl. 280-802.000.

Ogawa, Tadahiro. Apparatus for taking a continuous photograph of the exterior of an article. 4,372,659, Cl. 354-80.000.

Ohhara, Minoru: *See—*
- Yoshikumi, Chikao; Hirose, Fumio; Ohmura, Yoshio; Fujii, Takayoshi; Ikuzawa, Masanori; Matsunaga, Kenichi; Ando, Takao; and Ohhara, Minoru, 4,372,948, Cl. 424-180.000.

Ohloff, Gunther; and Giersch, Wolfgang K., to Firmenich SA. Unsaturated alicyclic compounds, their use as perfuming and flavoring ingredients. 4,372,881, Cl. 252-522.00R.

Ohmura, Hidemasa: *See—*
- Sato, Toshio; Suzuki, Sho; and Ohmura, Hidemasa, 4,373,053, Cl. 524-457.000.

Ohmura, Yoshio: *See—*
- Yoshikumi, Chikao; Hirose, Fumio; Ohmura, Yoshio; Fujii, Takayoshi; Ikuzawa, Masanori; Matsunaga, Kenichi; Ando, Takao; and Ohhara, Minoru, 4,372,948, Cl. 424-180.000.

Ohshima, Ken: *See—*
- Shibata, Tsutomu; Kimura, Kenji; Satoh, Ken; Saitou, Sinichi; Kato, Toshikazu; Watanabe, Seizo; and Ohshima, Ken, 4,372,504, Cl. 242-198.000.

Ohtsu Tire and Rubber Co. Ltd.: *See—*
- Osada, Isao; and Sano, Shoichi, 4,372,365, Cl. 152-158.000.

Oizumi, Masayuki; Uekita, Masakazu; Goto, Masana; Azumi, Ichiro; Uozumi, Shoji; Abe, Masaharu; Fushiki, Yasuo; Isshiki, Minoru; and Kawasaki, Kunio, to Kanegafuchi Kagaku Kogyo Kabushiki Kaisha. Continuous process for producing reinforced resin laminates. 4,372,800, Cl. 156-307.300.

Okamoto, Katsunari; Edahiro, Takao; Kawana, Akio; and Miya, Tetsuo, to Nippon Telegraph & Telephone Public Corporation. Single mode optical fibers. 4,372,647, Cl. 350-96.330.

Okamoto, Kenji: *See—*
- Hiyama, Yasuhiro; Oshizawa, Hidekazu; Okamoto, Kenji; and Kobayashi, Masayoshi, 4,372,266, Cl. 123-357.000.

Okaniwa, Kenichiro: *See—*
- Masukawa, Toyoaki; Ishikawa, Wataru; Okaniwa, Kenichiro; and Yamashita, Kiyoshi, 4,373,017, Cl. 430-270.000.

Okazaki, Takahisa: *See—*
- Takemura, Yasuhiko; Okazaki, Takahisa; and Imai, Akira, 4,372,323, Cl. 128-660.000.

Oki, Toshikazu; Matsuzawa, Yasue; Ishikura, Tomoyuki; Takeuchi, Tomio; and Umezawa, Hamao, to Sanraku-Ocean Co., Ltd. Anthracycline derivatives. 4,373,094, Cl. 536-6.400.

Oku, Junzo: *See—*
- Yamamoto, Ryozo; Yanase, Keiichi; and Oku, Junzo, 4,372,532, Cl. 251-175.000.

Okumura, Tamotsu; and Kadono, Tetsuro, to Shionogi & Co., Ltd. Reverse-phase thin layer chromatographic plate. 4,372,850, Cl. 210-198.300.

Olah, George A. Bifunctional acid-base catalyzed conversion of hetero-substituted methanes into olefins. 4,373,109, Cl. 585-640.000.

Oleck, Stephen M.; and Wilson, Robert C., Jr., to Mobil Oil Corporation. Production of high viscosity index lubricating oil stock. 4,372,839, Cl. 208-59.000.

Olin Corporation: *See—*
- Coppola, Pasquale J.; and Dever, Gerald V., Jr., 4,372,352, Cl. 141-1.000.

Olsen, Everett O.: *See—*
- Brown, Christopher R.; and Olsen, Everett O., 4,372,164, Cl. 73-704.000.

Olson, Alan J.; and Vielhaber, Robert G., to B. F. Goodrich Company, The. Recovery of chlorinated poly(vinyl chloride). 4,373,093, Cl. 528-491.000.

Olson, Larry D., to UOP Inc. Hybrid woven glass cloths. 4,372,347, Cl. 139-420.00C.

Olympus Optical Co., Ltd.: *See—*
- Motoyama, Kazuyasu; and Nakao, Toshihiro, 4,373,172, Cl. 360-105.000.
- Shibata, Tsutomu; Kimura, Kenji; Satoh, Ken; Saitou, Sinichi; Kato, Toshikazu; Watanabe, Seizo; and Ohshima, Ken, 4,372,504, Cl. 242-198.000.

Ono, Chikai: *See—*
- Toyoda, Kazuhiro; Ono, Chikai; and Hayashi, Toshio, 4,373,195, Cl. 365-154.000.

Onoda, Mamoru: *See—*
- Sugiyama, Takeshi; Shirouchi, Shoji; Tsuchiya, Osamu; Onoda, Mamoru; Yamashita, Atsuko; Fujita, Isao; and Imanishi, Nobuyuki, 4,372,779, Cl. 75-0.50R.

Orangeburg Technologies, Inc.: *See—*
- Burnham, Francis L., 4,372,114, Cl. 60-325.000.

Orbisphere Corporation Wilmington: *See—*
- Hale, John M.; and Weber, Eugen, 4,372,021, Cl. 29-235.000.

Orcon Corporation: *See—*
- Bascom, Hollis H.; Matweyou, Stephen; Andersen, Alan J.; and Greci, John J., 4,372,801, Cl. 156-434.000.

Orenstein, Henry. Electronic question and answer game. 4,372,554, Cl. 273-1.00E.

Orloff, Leslie M. Device for altering encoded data. 4,373,158, Cl. 340-825.300.

Ort, Sterling L. Method and apparatus for construction of a solar collector. 4,372,292, Cl. 126-450.000.

Osada, Isao; and Sano, Shoichi, to Ohtsu Tire and Rubber Co. Ltd.; and Honda Giken Kogyo Kabushiki Kaisha. Safety wheels. 4,372,365, Cl. 152-158.000.

Osaki, Mikio; and Kita, Sumio, to Sharp Kabushiki Kaisha. Droplet charge condition detection in an ink jet system printer of the charge amplitude controlling type. 4,373,164, Cl. 346-75.000.

Oshima, Fumio, to Asahi Kogaku Kogyo Kabushiki Kaisha. Rear aperture converter. 4,372,663, Cl. 354-286.000.

Oshizawa, Hidekazu: *See—*
- Hiyama, Yasuhiro; Oshizawa, Hidekazu; Okamoto, Kenji; and Kobayashi, Masayoshi, 4,372,266, Cl. 123-357.000.

Ostgaard, John T., to Pipe Technology Systems, Inc. Pile installation and removal mechanisms in off-shore rigs and method of using same. 4,372,707, Cl. 405-224.000.

Ostlund, Roland J. A., to Jobmatic, Inc. Transportation installation. 4,372,218, Cl. 104-88.000.

Ota, Akiho: *See—*
Yoshino, Yataro; Ota, Akiho; and Sugiura, Hiroaki, 4,372,909, Cl. 264-521.000.
Ota, Shingo, to Kabushiki Kaisha Komatsu Seisakusho. Operating force transmitting apparatus. 4,372,178, Cl. 74-512.000.
Otobe, Yutaka; and Kawamoto, Michio, to Honda Giken Kogyo Kabushiki Kaisha. Exhaust gas recirculation control system. 4,372,277, Cl. 123-571.000.
Otouma, Hiroshi: *See—*
Oda, Yoshio; Otouma, Hiroshi; Uchida, Keiichi; Morikawa, Shinsuke; and Ikemura, Masaaki, 4,372,938, Cl. 423-469.000.
Otsuka Pharmaceutical Company, Limited: *See—*
Uchida, Minoru; Nishi, Takao; and Nakagawa, Kazuyuki, 4,372,953, Cl. 424-248.500.
Ott, Hans, to Sandoz Ltd. 5, 10-Dihydroimidazo[2,1-b]quinazolines and pharmaceutical compositions containing them. 4,372,956, Cl. 424-251.000.
Otten, David M., to PepsiCo Inc. Vending machine control circuit. 4,372,464, Cl. 221-14.000.
Otterson, Robert C. Single wheel trailer support. 4,372,569, Cl. 280-78.000.
Owens-Illinois, Inc.: *See—*
McColl, Bruce J., 4,372,407, Cl. 180-6.200.
Oxy-Dry Corporation: *See—*
Van Zantwyk, Conrad G., 4,372,760, Cl. 55-227.000.
Oyama, Kaoru: *See—*
Kodama, Yutaka; Oyama, Kaoru; Shimizu, Ryusaku; Nakabayashi, Masao; Nakashima, Yoshifumi; Sano, Takashi; Shibata, Masaaki; and Goden, Kiyoshi, 4,372,949, Cl. 424-199.000.
Ozen Corporation: *See—*
Watanabe, Katsumi, 4,373,199, Cl. 369-31.000.
Paccar Inc.: *See—*
Parks, Richard W., 4,372,279, Cl. 123-557.000.
Packaging Corporation of America: *See—*
Champlin, Charles L.; Misura, John T.; and Reiser, Carl J., 4,372,763, Cl. 55-501.000.
Pagel, Gary A. Storm window unit having expandable frame. 4,372,082, Cl. 49-62.000.
Paget, Fredrick W.: *See—*
Bonazoli, Robert P.; and Paget, Fredrick W., 4,373,146, Cl. 315-209.00R.
Pailler, Jean-Yves, to Etablissements EVIRA. Mould for producing profiled elements of plastics material. 4,372,524, Cl. 249-79.000.
Pako Corporation: *See—*
Kaufmann, Kenneth M., 4,372,665, Cl. 354-298.000.
Kaufmann, Kenneth M., 4,372,666, Cl. 354-298.000.
PanCanadian Petroleum Limited: *See—*
Cymbalisty, Lubomyr M.; Maskwa, Alvin J.; Trevoy, Lloyd W.; and Wojno, Jan, 4,372,174, Cl. 73-863.110.
Panclor S.A.: *See—*
Spaziante, Placido M.; and Sioli, Giancarlo, 4,372,827, Cl. 204-95.000.
Panelgraphic Corporation: *See—*
Russell, Raymond J., 4,373,007, Cl. 428-412.000.
Panzhauser, Erich: *See—*
Haugeneder, Hans; and Panzhauser, Erich, 4,372,373, Cl. 165-54.000.
Papanu, Steven C.; and Curtis, Ralston, to Zoecon Corporation. Novel pesticidal formulation. 4,372,943, Cl. 424-78.000.
Papp, Maria H.: *See—*
Takacs, Kalman; Papp, Maria H.; Kovacs, Gabor; Ajzert, Ilona K.; Simay, Antal; Nagy, Peter L.; Puskas, Marian E.; Sebestyen, Gyula; Stadler, Istvan; and Sumeghy, Zoltan, 4,373,104, Cl. 546-145.000.
Parel, Claude: *See—*
Uebelhart, Walter; Gilomen, Beat; and Parel, Claude, 4,372,108, Cl. 57-358.000.
Parker, Alan: *See—*
Farnhill, William M.; and Parker, Alan, 4,372,109, Cl. 57-401.000.
Parker, Bernard, to Baker Instruments Corp. Automatic pipettor employing an adjustable volume delivery pump. 4,372,175, Cl. 73-864.170.
Parks, Richard W., to Paccar Inc. Heated fuel line. 4,372,279, Cl. 123-557.000.
Parlman, Robert M.: *See—*
Bresson, Clarence R.; and Parlman, Robert M., 4,372,844, Cl. 209-166.000.
Paros, Jerome M.: *See—*
EerNisse, Errol P.; and Paros, Jerome M., 4,372,173, Cl. 73-862.590.
Parziale, Victor E.; Dines, Martin B.; and DiGiacomo, Peter M., to Occidental Research Corporation. Layered or amorphous cyclic organometallic inorganic polymers. 4,373,079, Cl. 528-9.000.
Patel, Gordhanbhai N.: *See—*
Preziosi, Anthony F.; Patel, Gordhanbhai N.; Denkewalter, Robert G.; and Baughman, Ray H., 4,373,032, Cl. 521-38.000.
Patentes FAC, S.A.: *See—*
Garcia, Francisco E., 4,372,137, Cl. 70-41.000.
Patrick, Billy J. Bidet alternative apparatus. 4,371,993, Cl. 4-448.000.
Patzschke, Hans-Peter; and Gobel, Armin, to Herberts Gesellschaft mit Beschrankter Haftung. Pre-condensed, thermosetting aqueous varnish coating agent and its utilization for cathodic deposition upon electrically conducting surfaces. 4,373,059, Cl. 524-761.000.
Patzschke, Hans-Peter; and Gobel, Armin, to Herberts Gesellschaft mit beschrankter Haftung. Self-cross-linking, thermosetting, aqueous lacquer coating material, and its utilization for the cathodic deposition upon electrically conducting surfaces. 4,373,072, Cl. 525-438.000.
Paul, Hans-Gunther: *See—*
Moraw, Klaus; and Paul, Hans-Gunther, 4,373,038, Cl. 523-156.000.
Paul, Herman L., Jr., to Continental Disc Corporation. Overpressure relief control system. 4,372,334, Cl. 137-12.000.
Paul, James M.; and Espenscheid, Wilton F., to Mobil Oil Corporation. Method for restoring formation previously leached with an ammonium leach solution. 4,372,616, Cl. 299-5.000.
Paul Troester Maschinenfabrik: *See—*
Menges, George; Kircher, Klaus; and Franzkoch, Bernd, 4,372,898, Cl. 264-22.000.
Pearey, John T., to Union Special G.m.b.H. Self-advancing mineral mining installation including tilting machine support. 4,372,618, Cl. 299-31.000.
Pebco, Inc.: *See—*
Ladt, Carroll H., 4,372,730, Cl. 414-786.000.
Pedain, Josef: *See—*
Nachtkamp, Klaus; Bock, Manfred; Mennicken, Gerhard; and Pedain, Josef, 4,373,081, Cl. 528-45.000.
Pelley, Ronald L. Escape chute. 4,372,423, Cl. 182-42.000.
Pemco-Kalamazoo, Inc.: *See—*
Black, John W.; and Slager, Ralph E., 4,372,738, Cl. 425-451.900.
PepsiCo Inc.: *See—*
Otten, David M., 4,372,464, Cl. 221-14.000.
Perkey, Conrad G.: *See—*
Ackerman, Allen D.; Perkey, Conrad G.; Martin, Robert A.; and Justusson, William M., 4,372,112, Cl. 60-323.000.
Perkin-Elmer Corporation, The: *See—*
Loveland, Robert S., 4,372,166, Cl. 73-861.280.
Loveland, Robert S., 4,372,167, Cl. 73-861.280.
Perlin, Alfred R., to Kendall Company, The. Compression device. 4,372,297, Cl. 128-64.000.
Pestellini, Vittorio; Ghelardoni, Mario; Giannotti, Danilo; Meli, Alberto; and Maggi, Carlo A., to A. Menarini S.A.S. Compound having antitussive activity. 4,372,958, Cl. 424-253.000.
Peter, Karl: *See—*
Gernhardt, Paul; Danguillier, Wilhelm; Peter, Karl; Grams, Wolfgang; Pohl, Siegfried; and Schnitzler, Peter, 4,372,754, Cl. 48-77.000.
Peters, Kenneth; and Culpin, Barry, to Chloride Group Limited. Electric storage batteries. 4,373,015, Cl. 429-57.000.
Petersen, Hans C.; Kyster, Erik; Thomsen, Svend E.; and Flagstad, Carl O., to Danfoss A/S. Hydrostatic steering device. 4,372,413, Cl. 180-152.000.
Petersen-Hoj, Peter, to Tetra Pak Developpement SA. Laminated material. 4,373,002, Cl. 428-213.000.
Petersen, Marvin J.: *See—*
Fisher, Wayland I.; and Petersen, Marvin J., 4,372,184, Cl. 83-98.000.
Peterson, David, to U.S. Peroxygen Company. Di(acylperoxy)-1,4-cyclohexane dimethanol-bis-carbonates. 4,372,877, Cl. 260-453.0RZ.
Peterson, Ralph W., to Control Data Corporation. Low frequency electronically steerable cylindrical slot array radar antenna. 4,373,162, Cl. 343-771.000.
Petro-Canada Exploration Inc.: *See—*
Cymbalisty, Lubomyr M.; Maskwa, Alvin J.; Trevoy, Lloyd W.; and Wojno, Jan, 4,372,174, Cl. 73-863.110.
Petrofina Canada Inc.: *See—*
Cymbalisty, Lubomyr M.; Maskwa, Alvin J.; Trevoy, Lloyd W.; and Wojno, Jan, 4,372,174, Cl. 73-863.110.
Petrolite Corporation: *See—*
Quinlan, Patrick M., 4,372,775, Cl. 71-67.000.
Watson, Frederick D.; Mayse, Weldon D.; and Franse, Albert D., 4,372,837, Cl. 204-186.000.
Petros, Andrew J., to Mesta Machine Company. Method and apparatus for checking mill roll bearing assembly. 4,372,625, Cl. 384-129.000.
Petros, Andrew J., to Mesta Machine Company. Taper journal bearing for rolls for use in rolling mills. 4,372,626, Cl. 384-129.000.
Pfannkuch, Robert B.; and Grab, Fred W., to Bell & Howell Company. Apparatus and method for producing rapid, high resolution hard color copies from computer-based graphics and digital image processing systems. 4,373,156, Cl. 340-703.000.
Pflaum, August, to M.A.N.-ROLAND Druckmaschinen Aktiengesellschaft. Apparatus for bending a pressure roll of a rotary printing press. 4,372,205, Cl. 101-153.000.
Phillips, Alan G.: *See—*
Church, Peter K.; and Phillips, Alan G., 4,372,823, Cl. 204-2.100.
Phillips Petroleum Company: *See—*
Bresson, Clarence R.; and Parlman, Robert M., 4,372,844, Cl. 209-166.000.
Edmonds, James T., Jr., 4,373,090, Cl. 528-387.000.
Edmonds, James T., Jr., 4,373,091, Cl. 528-481.000.
Gardner, Lloyd E., 4,372,842, Cl. 208-254.00H.
Hunt, Harold R., 4,373,024, Cl. 435-41.000.
Hutson, Thomas, Jr., 4,373,110, Cl. 585-719.000.
Johnson, Paul H., 4,372,937, Cl. 423-454.000.
Wood, Jerold D.; and Stacy, Carl J., 4,373,041, Cl. 524-77.000.
Phillips, Richard B.; Kempf, Arthur W.; and Eckert, Robert C., to International Paper Company. Chlorine free process for bleaching lignocellulosic pulp. 4,372,812, Cl. 162-40.000.
Pierce, O. Leon, to Universal Data Systems, Inc. DC to DC converter for line powered modem. 4,373,117, Cl. 179-2.0DP.
Pierre Fabre SA: *See—*
Mouzin, Gilbert; Cousse, Henri; Stenger, Antoine; and Casadio, Sylvano, 4,372,975, Cl. 424-324.000.

Pila, Karl. Meat cutting band blade machine. 4,372,185, Cl. 83-101.000.
Pilat, Eugene R.; Franks, George J., Jr.; and Dyben, Jerry F. Electronic security device and method. 4,372,590, Cl. 292-33.000.
Pilkington Brothers Limited: *See—*
Cross, Raymond P.; and Simpkin, Gordon T., 4,372,774, Cl. 65-114.000.
Pillsbury Company, The: *See—*
Haasl, Michael J.; Snider, Kenneth D.; and Murphy, William L., 4,372,982, Cl. 426-549.000.
Pindell, Robert G.: *See—*
Rooney, John F.; and Pindell, Robert G., 4,372,382, Cl. 166-264.000.
Pinson, George T.; and Hunter, Alex B., to Boeing Company, The. Dispensing system for use on a carrier missile for rearward ejection of submissiles. 4,372,216, Cl. 102-489.000.
Pioneer Electronic Corporation: *See—*
Sunaga, Yoshimitsu; and Honda, Satoru, 4,373,170, Cl. 360-71.000.
Piotti, Joseph J., Jr. Weight attachment for baseball glove. 4,371,983, Cl. 2-19.000.
Pipe Technology Systems, Inc.: *See—*
Ostgaard, John T., 4,372,707, Cl. 405-224.000.
Pitney Bowes Inc.: *See—*
Calabrese, Richard A., 4,372,247, Cl. 118-116.000.
Pitt, Gillies D.; and Williamson, Roger J., to ITT Industries, Inc. Apparatus for measuring fluid flow. 4,372,165, Cl. 73-861.220.
Plate, Arthur: *See—*
Dudziak, Ernst; Kwauka, Gerd-Georg; Plate, Arthur; and Lubeck, Hermann, 4,372,201, Cl. 100-7.000.
PLM Aktiebolag: *See—*
Jakobsen, Kjell M.; and Nilsson, Claes T., 4,372,908, Cl. 264-292.000.
Plum, Helmut: *See—*
Ritz, Jurgen; Fischer, Hannes; and Plum, Helmut, 4,373,078, Cl. 526-317.000.
Plumet, Lucien: *See—*
Clerbois, Lucien; and Plumet, Lucien, 4,372,813, Cl. 162-48.000.
Plunkett, Galen P., Jr, Galen P.: *See—*
Means, Rodney J.; Plunkett, Galen P., Jr, Galen P.; Dennis, Charles A.; and Moon, John L., 4,373,183, Cl. 364-200.000.
Pohl, Siegfried: *See—*
Gernhardt, Paul; Danguillier, Wilhelm; Peter, Karl; Grams, Wolfgang; Pohl, Siegfried; and Schnitzler, Peter, 4,372,754, Cl. 48-77.000.
Pohlmann, Erich; and Doetsch, Hans-Peter, to Schneider, Christian. Apparatus for heat transformation. 4,372,127, Cl. 62-6.000.
Pokhis, Naum. Conical bladder. 4,371,985, Cl. 2-22.000.
Polsky, Bernice. Seamless crotch. 4,371,989, Cl. 2-227.000.
Pomerantz, Daniel I.; and Baxter, Richard V., Jr., to Emhart Industries, Inc. Method and means for programming the operation of an apparatus. 4,372,054, Cl. 34-44.000.
Pomp, Jurgen: *See—*
Wiener, Dieter; Sulzer, Gerd; Skyba, Rudolf, deceased; and Pomp, Jurgen, 4,372,085, Cl. 51-216.0ND.
Pontefract, Robert A., to White Consolidated Industries, Inc. Laminated gage glass assembly. 4,372,652, Cl. 350-319.000.
Poole, Bordie D., Jr.: *See—*
Adams, Richard R.; MacConochie, Ian O.; and Poole, Bordie D., Jr., 4,372,680, Cl. 356-51.000.
Pope, Daniel L.: *See—*
Gibson, David W.; Hale, Albert L.; Pope, Daniel L.; Rutledge, Donald R.; and Wells, Kirk P., 4,372,535, Cl. 254-319.000.
Porter, David L., to Dow Chemical Company, The. Purification of alkali metal hydroxides. 4,372,924, Cl. 423-179.000.
Potts, James E., to Union Carbide Corporation. Disposable articles coated with degradable water insoluble polymers. 4,372,311, Cl. 128-287.000.
Pou, Frederick M., to Monarch Marking Systems, Inc. High quality printer. 4,372,696, Cl. 400-124.000.
Powell, Andrian J. C.: *See—*
Powell, John E.; and Powell, Andrian J. C., 4,372,712, Cl. 406-153.000.
Powell, John E.; and Powell, Andrian J. C., to Beloit Corporation. Continuous transfer of particles from a gaseous conveying medium to a liquid conveying medium. 4,372,712, Cl. 406-153.000.
Powers, Jerrold V., Jr., to BDM Corporation, The. Shut-in device for stopping the flow of high pressure fluids. 4,372,378, Cl. 166-57.000.
Pozzobon, Alessandro, to Nordica S.p.A. Device for adjusting the flexibility of a ski boot or the like article. 4,372,061, Cl. 36-117.000.
PPG Industries, Inc.: *See—*
Krumwiede, John F.; and Amrhein, Alan G., 4,372,770, Cl. 65-27.000.
Schwartz, Richard A., 4,373,075, Cl. 526-230.500.
Seiner, Jerome A.; and Schimmel, Karl F., 4,373,083, Cl. 528-67.000.
Prescott, John F.: *See—*
Hoelzen, Warren R.; Prescott, John F.; and Tyler, Michael N., 4,372,212, Cl. 102-264.000.
Prest, William M., Jr., to Xerox Corporation. Optically isotropic devices. 4,373,065, Cl. 525-132.000.
Preziosi, Anthony F.; Patel, Gordhanbhai N.; Denkewalter, Robert G.; and Baughman, Ray H., to Allied Corporation. Metal salts of polyacetylenic compounds and uses thereof as ion exchange and thermochromic polymers. 4,373,032, Cl. 521-38.000.
Priegnitz, James W.: *See—*
Neuzil, Richard W.; and Priegnitz, James W., 4,373,025, Cl. 435-94.000.
Pries, Robert W., to International Business Machines Corporation. Self-triggering quality control sensor. 4,372,672, Cl. 355-14.00R.
Primm, Alice E.: *See—*
Leavitt, Alvan W.; and Primm, Alice E., 4,373,159, Cl. 343-6.50R.
Principe, Viktor, to Arthur Schmid AG. Thread monitoring device. 4,372,235, Cl. 112-273.000.
Pritchitt, Frederick J., to Marpac Industries, Inc. Dispensing valve to be used with bottles of fluent imaging material for the development of electrostatic images. 4,372,467, Cl. 222-501.000.
Process Control Corporation: *See—*
Kean, James P., Jr., 4,372,713, Cl. 406-172.000.
Procter & Gamble Company, The: *See—*
Koster, Robertus J. C.; Six, Volker; and Hale, Peter, 4,372,882, Cl. 252-529.000.
Progressive Machine Products, Inc.: *See—*
Betush, Frank A., 4,372,307, Cl. 128-224.000.
Propst, Paul L.; Richardson, Donald A.; and Hinrichs, Carl B., to Stow/Davis Furniture Company. Combination wire enclosure and wire. 4,372,629, Cl. 312-223.000.
Provincial Holdings Ltd.: *See—*
Salter, Robert S.; Boorman, Roy S.; and Gilders, Ross D., 4,372,782, Cl. 75-118.00R.
Puckett, Hubert L., to Ceco Corporation, The. Machine for progressively closing flanges of cap strips on standing rib roofs. 4,372,022, Cl. 29-243.580.
Pullman Incorporated: *See—*
Raksanyi, William; and Marsh, Ronald W., 4,372,604, Cl. 297-162.000.
Pullmax Aktiebolag: *See—*
Lehtinen, Esko, 4,372,183, Cl. 83-71.000.
Purrmann, Robert: *See—*
Schmitt, Werner; Purrmann, Robert; Jochum, Peter; and Hubner, Heinz-Joachim, 4,372,836, Cl. 204-159.230.
Puskas, Marian E.: *See—*
Takacs, Kalman; Papp, Maria H.; Kovacs, Gabor; Ajzert, Ilona K.; Simay, Antal; Nagy, Peter L.; Puskas, Marian E.; Sebestyen, Gyula; Stadler, Istvan; and Sumeghy, Zoltan, 4,373,104, Cl. 546-145.000.
Quaker Oats Company, The: *See—*
Ciganko, David J., 4,372,238, Cl. 112-439.000.
Quang, Pham K.: *See—*
Kings, Donald H. M.; Marckmann, Jean-Claude; and Quang, Pham K., 4,373,016, Cl. 430-126.000.
Quartex, Inc.: *See—*
EerNisse, Errol P.; and Paros, Jerome M., 4,372,173, Cl. 73-862.590.
Quartrol Corporation: *See—*
Livorsi, Carl F., 4,372,530, Cl. 251-173.000.
Quelch, Albert G. B. Contour bottle carrier. 4,372,598, Cl. 294-87.200.
Queneau, Paul E.; and Schuhmann, Reinhardt, Jr. Apparatus for oxygen sprinkle smelting of sulfide concentrates. 4,372,540, Cl. 266-171.000.
Quick, William H.: *See—*
Strahan, Virgil H.; James, Kenneth A.; and Quick, William H., 4,372,646, Cl. 350-96.310.
Quinlan, Patrick M., to Petrolite Corporation. Inhibition of microbiological growth with thiazine quaternary ammonium salts of polyepihalohydrin. 4,372,775, Cl. 71-67.000.
Quinn, Paul A., Jr., to International Business Machines Corporation. Sheet feeder for typewriters. 4,372,699, Cl. 400-625.000.
R. W. Hartnett Company: *See—*
Ackley, Charles E., Sr.; and Ackley, Charles E., Jr., 4,372,437, Cl. 198-380.000.
Racal Communications Equipment Limited: *See—*
Rhodes, Stephen L., 4,373,203, Cl. 375-10.000.
Racal Recorders Ltd.: *See—*
Balme, Michael J.; and Edwards, David T., 4,373,154, Cl. 340-347.0DD.
Raftis, Spiros G., to Red Valve Co., Inc. Pinch valve sleeve. 4,372,528, Cl. 251-4.000.
Raible, Donald A., to Bentley Laboratories, Inc. Blood oxygenator. 4,372,914, Cl. 422-46.000.
Raitto, Russell G., to Concord Laboratories, Inc. Method for taking a blood sample. 4,372,325, Cl. 128-763.000.
Raksanyi, William; and Marsh, Ronald W., to Pullman Incorporated. Stowable armrest table assembly. 4,372,604, Cl. 297-162.000.
Ramer, James L. Pipeline energy recapture device. 4,372,113, Cl. 60-325.000.
Rampel, Hans; Hess, Peter; and Schulz, Volkmar, to Metallwerk Max Brose GmbH & Co. Adjusting mechanism for the seat of an automobile. 4,372,521, Cl. 248-430.000.
Ramsey, Henry R., to Webster Spring Co. Inc. Spring assembly. 4,372,546, Cl. 267-100.000.
Randleman, Marvin T.: *See—*
Kimball, Michael E.; and Randleman, Marvin T., 4,373,082, Cl. 528-60.000.
Ranford, Alan B.: *See—*
Cornell, William D.; Crouther, Ronald; Dyer, Howard P.; and Ranford, Alan B., 4,372,336, Cl. 137-205.000.
Rasmussen, George E.; and Donkle, Lucius B., Jr., to Interlake, Inc. Gravity-feed storage and delivery system. 4,372,451, Cl. 211-187.000.
Rasmussen, Lauritz B. L., to Superfos Glasuld A/S (Superfos A/S). Method for use in the manufacture of a building element. 4,372,799, Cl. 156-285.000.
Rauch, Jeffrey S., to Mechanical Technology Incorporated. Oil backed Stirling engine displacer diaphragm. 4,372,115, Cl. 60-520.000.

Rausch, John J.; and Van Thyne, Ray J., to Rausch, John J.; Van Thyne, Ray J.; and Material Sciences Corporation. Process of making surface alloyed parts. 4,372,995, Cl. 427-300.000.
Raychem Corporation: *See—*
Greuel, Walter J., Jr., 4,372,796, Cl. 156-187.000.
Lutz, Michael A., 4,372,693, Cl. 374-111.000.
RCA Corporation: *See—*
Vossen, John L., Jr., 4,372,806, Cl. 156-643.000.
Vossen, John L., Jr.; and Halon, Bernard, 4,372,807, Cl. 156-643.000.
Rea, James H.: *See—*
Karim, Khalid A.; Lakshmanan, Pallavoor R.; and Rea, James H., 4,373,066, Cl. 525-133.000.
Rebel, Herbert, to M.A.N.-ROLAND Druckmaschinen Aktiengesellschaft. Varnishing units on printing presses. 4,372,244, Cl. 118-46.000.
Red Valve Co., Inc.: *See—*
Raftis, Spiros G., 4,372,528, Cl. 251-4.000.
Reddy, Malireddy S.: *See—*
Reinbold, George W.; and Reddy, Malireddy S., 4,372,979, Cl. 426-36.000.
Reed, Marion G.; Loken, Tor; and Bryhn, Odd R., to Chevron Research Company. Stabilizing clay soil with chemical solutions. 4,372,786, Cl. 106-900.000.
Reed Rock Bit Company: *See—*
Drake, Eric F., 4,372,404, Cl. 175-374.000.
Trevino, Joe, Jr., 4,372,402, Cl. 175-318.000.
Refined Industry Company Limited, The: *See—*
Lee, Cheuk-Ming, 4,372,489, Cl. 238-10.00F.
Reflux Limited: *See—*
Ames, Robert K., 4,372,383, Cl. 166-266.000.
Regie National des Usines Renault: *See—*
Coste, Jean-Claude, 4,373,149, Cl. 318-281.000.
Reichert, David A.: *See—*
Del Principe, Robert M.; and Reichert, David A., 4,372,557, Cl. 273-88.000.
Reichmanis, Elsa; Roman, Bernard J.; Tai, King L.; and Wilkins, Cletus W., Jr., to Bell Telephone Laboratories, Incorporated. Multiple exposure microlithography patterning method. 4,373,018, Cl. 430-312.000.
Reichmann, Wolfgang; Konig, Klaus; and Schonfelder, Manfred, to Bayer Aktiengesellschaft. Polyisocyanates, preparation and use thereof. 4,373,080, Cl. 528-45.000.
Reid, Keith. Air mattresses. 4,371,999, Cl. 5-457.000.
Reilly, William W.: *See—*
Mueller, William A.; Ingham, John D.; and Reilly, William W., 4,373,039, Cl. 523-205.000.
Reimbert, Andre. Vessel for storing particulate materials and method of emptying. 4,372,466, Cl. 222-482.000.
Reinauer, Thomas V., to United States Filter Corporation. Emission control apparatus. 4,372,821, Cl. 202-263.000.
Reinbold, George W.; and Reddy, Malireddy S., to Leprino Foods Company. Reduction of curd fines in cheese manufacture. 4,372,979, Cl. 426-36.000.
Reindl, Werner: *See—*
Grewal, Virinder; and Reindl, Werner, 4,372,809, Cl. 156-656.000.
Reinhard Mohn G.m.b.H.: *See—*
Dudziak, Ernst; Kwauka, Gerd-Georg; Plate, Arthur; and Lubeck, Hermann, 4,372,201, Cl. 100-7.000.
Reiser, Carl J.: *See—*
Champlin, Charles L.; Misura, John T.; and Reiser, Carl J., 4,372,763, Cl. 55-501.000.
Remy, Grandjean, to Ebauches, S.A. Electronic watch movement. 4,372,689, Cl. 368-155.000.
REPA Feinstanzwerk GmbH: *See—*
Fohl, Artur, 4,372,012, Cl. 24-68.00R.
Research-Cottrell, Incorporated: *See—*
Bush, John R., 4,372,832, Cl. 204-157.10R.
Rexnord Inc.: *See—*
Bradbury, Bernard G., 4,372,435, Cl. 198-356.000.
Krammer, Robert, deceased, 4,372,441, Cl. 198-781.000.
Rheem Manufacturing Company: *See—*
Clark, Keith R.; and Focia, Michael, Jr., 4,372,028, Cl. 29-460.000.
Rhoades, Craig A.; and Meeks, Thomas. Steam injection method and apparatus for recovery of oil. 4,372,386, Cl. 166-300.000.
Rhoades, James J., to Tapco Products Company, Inc. Sheet bending brake. 4,372,142, Cl. 72-319.000.
Rhodes, Stephen L., to Racal Communications Equipment Limited. Circuit arrangement and method for assessing communication activity on a particular radio communication channel. 4,373,203, Cl. 375-10.000.
Rhodes, William E., III: *See—*
Lover, Myron J.; Singer, Arnold J.; Lynch, Donald M.; and Rhodes, William E., III, 4,372,977, Cl. 424-342.000.
Rhone-Poulenc Industries: *See—*
Botton, Roger; and Cosserat, Dominique, 4,372,935, Cl. 423-393.000.
Helgorsky, Jacques; and Leveque, Alain, 4,372,923, Cl. 423-112.000.
Soula, Gerard, 4,373,070, Cl. 525-332.200.
Rhone-Poulenc Systemes: *See—*
Kings, Donald H. M.; Marckmann, Jean-Claude; and Quang, Pham K., 4,373,016, Cl. 430-126.000.
Rhoton, William A., to Boeing Company, The. Blind hole clamping tool. 4,372,015, Cl. 24-221.00R.
Riba nee Hildebrand, Jutta. Blower for a pressing table. 4,372,065, Cl. 38-15.000.
Richard Wolf GmbH: *See—*
Heckele, Helmut, 4,372,295, Cl. 128-4.000.
Richardson, Donald A.: *See—*
Propst, Paul L.; Richardson, Donald A.; and Hinrichs, Carl B., 4,372,629, Cl. 312-223.000.
Richardson, Edwin A.: *See—*
Davies, David R.; Richardson, Edwin A.; and Van Zanten, Marinus, 4,372,385, Cl. 166-281.000.
Richardson, Paul N., to Du Pont de Nemours, E. I., and Company. Flame-retardant polyamide compositions. 4,373,049, Cl. 524-375.000.
Richter, Johan C. F. C.; and Sherman, Michael I., to Kamyr, Inc. High pressure feeding. 4,372,711, Cl. 406-63.000.
Ricketts, Rodney H.: *See—*
Doggett, Robert V., Jr.; and Ricketts, Rodney H., 4,372,158, Cl. 73-147.000.
Doggett, Robert V., Jr.; and Ricketts, Rodney H., 4,372,159, Cl. 73-147.000.
Ricketts, Thomas E., to Occidental Oil Shale, Inc. Method of rubbling oil shale. 4,372,615, Cl. 299-2.000.
Ricoh Company, Ltd.: *See—*
Fujioka, Yoshisato; and Kawamura, Atsushi, 4,372,654, Cl. 350-427.000.
Yanagawa, Nobuyuki; and Mizuma, Kenichi, 4,372,547, Cl. 271-10.000.
Ridder, Detlef: *See—*
Schumacher, Hermann; Molineus, Tilman; and Ridder, Detlef, 4,372,581, Cl. 282-27.500.
Riffel, Ronald E.: *See—*
Caruthers, John E.; Jay, Robert L.; Riffel, Ronald E.; and Rothrock, Mark D., 4,372,157, Cl. 73-147.000.
Rigny, Paul: *See—*
Chatelet, Jean; Clerc, Michel; Coste, Andre; and Rigny, Paul, 4,372,928, Cl. 423-249.000.
Rilett Energitjanst AB: *See—*
Lindroos, Ingvald R., 4,372,761, Cl. 55-260.000.
Ringe, Stephen J.: *See—*
Stanczak, Edmund A.; and Ringe, Stephen J., 4,372,603, Cl. 296-146.000.
Ringis, Gerald A., to Boeing Company, The. End shaft mount for conveyor. 4,372,440, Cl. 198-728.000.
Risbud, Subhash H.: *See—*
Mahoney, Dennis F.; Kober, Alfred E.; and Risbud, Subhash H., 4,372,227, Cl. 110-342.000.
Ritchie, Leon T.; Snyder, Clair W., Jr.; Toeppen, Thurston H.; and Woratyla, John A., to AMP Incorporated. Tilt latch zero insertion force connector assembly. 4,372,634, Cl. 339-17.00C.
Ritter, Allen M., to General Electric Company. Motor control system. 4,373,150, Cl. 318-336.000.
Ritter, Gerhard: *See—*
Schmidt, Gerhard; Ritter, Klaus; Ritter, Gerhard; and Ritter, Josef, 4,372,350, Cl. 140-112.000.
Ritter, Gunter, to Tetra Werke Dr. rer. nat. Ulrich Baensch Gesellschaft mit beschrankter Haftung. Method of regenerating ion exchangers. 4,372,858, Cl. 210-674.000.
Ritter, Josef: *See—*
Schmidt, Gerhard; Ritter, Klaus; Ritter, Gerhard; and Ritter, Josef, 4,372,350, Cl. 140-112.000.
Ritter, Klaus: *See—*
Schmidt, Gerhard; Ritter, Klaus; Ritter, Gerhard; and Ritter, Josef, 4,372,350, Cl. 140-112.000.
Rittmann, Dieter: *See—*
Starp, Franz; and Rittmann, Dieter, 4,372,662, Cl. 354-273.000.
Ritz, Jurgen; Fischer, Hannes; and Plum, Helmut, to Hoechst Aktiengesellschaft. Process for the manufacture of hardenable copolymers and the use thereof. 4,373,078, Cl. 526-317.000.
Rivera, Alfredo. Water feeder conservation tank. 4,371,992, Cl. 4-353.000.
Rivier, Jean E. F.: *See—*
Brown, Marvin R.; Rivier, Jean E. F.; and Vale, Wylie W., Jr., 4,372,884, Cl. 260-112.50S.
Rizkalla, Nabil, to Halcon SD Group, Inc., The. Preparation of carboxylic acids. 4,372,889, Cl. 260-413.000.
Roach, Malcolm B.: *See—*
Baugh, John L.; Montgomery, James W.; and Roach, Malcolm B., 4,372,390, Cl. 166-373.000.
Robert Bosch GmbH: *See—*
Latsch, Reinhard; and Bianchi, Valerio, 4,372,270, Cl. 123-440.000.
Roberts, Gary P. Automobile bumper. 4,372,595, Cl. 293-131.000.
Robins, Harold J.: *See—*
Stroup, John F.; Robins, Harold J.; and Teeple, Michael, 4,372,910, Cl. 264-532.000.
Robinson, Earl, to Lovable Company, The. Molded reinforced breast cup and method for making same. 4,372,321, Cl. 128-463.000.
Robinson, Ivan M., to Du Pont de Nemours, E. I., and Company. Sulfur-modified polypropylene ether glycols, a method for preparing them, and polyurethanes prepared therefrom. 4,373,084, Cl. 528-79.000.
Robinson, Joseph G.; and Barnes, David I., to Coal Industry (Patents) Limited. Phenanthrene based polyimide resin. 4,373,089, Cl. 528-353.000.
Robinson, Neil L.; and Silkensen, Ralph D., to International Business Machines Corporation. Multi-element head assembly. 4,373,173, Cl. 360-121.000.
Roche, Charles W., to Uni-Flange Corporation. Adapter flange. 4,372,587, Cl. 285-238.000.

Rocks, Raymond E.: *See—*
Neti, Radhakrishna M.; and Rocks, Raymond E., 4,372,915, Cl. 422-91.000.
Rockwell International Corporation: *See—*
Bailey, Robert F., 4,372,985, Cl. 427-38.000.
Denniston, James L., 4,372,507, Cl. 244-113.000.
Iannucci, Vincent A.; and Haehnel, Rudolf H., 4,372,191, Cl. 87-48.000.
Shutt, Sidney G., 4,372,162, Cl. 73-517.00B.
Shutt, Sidney G., 4,372,520, Cl. 248-604.000.
Strahan, Virgil H.; James, Kenneth A.; and Quick, William H., 4,372,646, Cl. 350-96.310.
Tittmann, Bernhard R.; Ahlberg, Lloyd A.; and Elsley, Richard K., 4,372,163, Cl. 73-602.000.
Wiers, John W.; Roper, Daniel W.; and Johnson, Richard F., 4,372,612, Cl. 297-374.000.
Rockwell, Martin G., to Hewlett-Packard Company. Analog peak voltage detector in a defibrillator. 4,372,324, Cl. 128-695.000.
Roentgen, Paul: *See—*
Krasborn, Gottfried; Roentgen, Paul; Meier, Wilhelm; and Erdweg, Josef, 4,373,130, Cl. 219-203.000.
Rogier, Leonce, to VALEO. Industrial emergency brake. 4,372,427, Cl. 188-72.100.
Rogov, Alexandr R.: *See—*
Surovikin, Vitaly F.; Rogov, Alexandr R.; Sazhin, Gennady V.; and Gorjunov, Georgy L., 4,372,936, Cl. 423-450.000.
Rohm GmbH Chemische Fabrik: *See—*
Besecke, Siegmund; Fink, Herbert; Sutterlin, Norbert; Markert, Gerhard; Schroder, Gunter; and Tilch, Willi, 4,373,056, Cl. 524-547.000.
Rohm and Haas Company: *See—*
Chan, Hak-Foon, 4,372,972, Cl. 424-304.000.
Emmons, William D.; and Feely, Wayne E., 4,373,008, Cl. 428-413.000.
Rohr, Wolfgang; Schirmer, Ulrich; and Wuerzer, Bruno, to BASF Aktiengesellschaft. M-Anilide-urethanes. 4,373,105, Cl. 560-27.000.
Rollins, M. Jack; and Coppin, William P., to Maxon Corporation. Ceramic gate valve and components therefor. 4,372,531, Cl. 251-174.000.
Rom GmbH: *See—*
Vetter, Heinz; and Friederich, Ernst, 4,372,739, Cl. 425-466.000.
Roman, Bernard J.: *See—*
Reichmanis, Elsa; Roman, Bernard J.; Tai, King L.; and Wilkins, Cletus W., Jr., 4,373,018, Cl. 430-312.000.
Rooney, John F.; and Pindell, Robert G., to Texaco Inc. Method and sampler for collecting a non-pressurized well fluid sample. 4,372,382, Cl. 166-264.000.
Roope, John R., Jr. Tool and parts catcher for boats. 4,372,243, Cl. 114-364.000.
Roper Corporation: *See—*
Goertzen, Gerold G.; and Herscher, Lee R., 4,372,397, Cl. 172-42.000.
Roper, Daniel W.: *See—*
Wiers, John W.; Roper, Daniel W.; and Johnson, Richard F., 4,372,612, Cl. 297-374.000.
Rosaen, Borje O.; and Fosdick, Dale P. Filter device with air bleed. 4,372,855, Cl. 210-316.000.
Rose, Leslie C.: *See—*
Hamrick, Joseph T.; and Rose, Leslie C., 4,372,389, Cl. 166-369.000.
Rosenberg, Avner: *See—*
Rosenberg, Peretz; and Rosenberg, Avner, 4,372,586, Cl. 285-178.000.
Rosenberg, Peretz; and Rosenberg, Avner. Rod clamp particularly useful as pipe coupling. 4,372,586, Cl. 285-178.000.
Rosenhauch, Irwin; and Ellis, Gary D., to Dresser Industries, Inc. Blowout preventer. 4,372,527, Cl. 251-1.00A.
Ross Operating Valve Company: *See—*
Cameron, Russell J., 4,372,202, Cl. 100-53.000.
Ross, Sidney D.: *See—*
Finkelstein, Manuel; Ross, Sidney D.; and Dunkl, Franz S., 4,373,176, Cl. 361-433.000.
Finkelstein, Manuel; Dunkl, Franz S.; and Ross, Sidney D., 4,373,177, Cl. 361-433.00A.
Ross, William L. Printing apparatus. 4,372,695, Cl. 400-119.000.
Rosswag, Helmut, to Schenk-Filterbau Gesellschaft mit beschrankter Haftung. Electrolyte solution for electropolishing. 4,372,831, Cl. 204-129.800.
Rothrock, Elmer W., to Chicago Bridge & Iron Company. Liquid storage tank. 4,372,340, Cl. 137-576.000.
Rothrock, Mark D.: *See—*
Caruthers, John E.; Jay, Robert L.; Riffel, Ronald E.; and Rothrock, Mark D., 4,372,157, Cl. 73-147.000.
Rozner, Alexander G.; and Helms, Horace H., to United States of America, Navy. Molten metal-liquid explosive method. 4,372,213, Cl. 102-301.000.
Ruffer, Dennis A.: *See—*
Marshall, John P.; and Ruffer, Dennis A., 4,373,186, Cl. 364-551.000.
Ruffino, Paule. Device for filing miscellaneous items of information. 4,372,067, Cl. 40-360.000.
Ruhrchemie Aktiengesellschaft: *See—*
Hibbel, Josef; Schleper, Bernard; and Scheve, Heinrich, 4,372,253, Cl. 122-7.00R.
Runge, Richard J.: *See—*
Gassaway, Gary S.; Scott, William R.; and Runge, Richard J., 4,373,197, Cl. 367-36.000.
Ruprecht, David R.: *See—*
Klee, David J.; Lovette, Norris G., Jr.; Ruprecht, David R.; Boyle, John F.; and Mullane, John C., Jr., 4,372,130, Cl. 62-330.000.
Rushing, Kyle W., to Gustafson, Inc. Treated peanut seeds. 4,372,080, Cl. 47-57.600.
Russell, Frank S.; and Simonelli, Robert J., to Sleeper & Hartley Corp. Wire coiling machine. 4,372,141, Cl. 72-131.000.
Russell, Raymond J., to Panelgraphic Corporation. [Non-photoinitialio] non-photocatalyzed dipentaerythritol polyacrylate based coating compositions exhibiting high abrasion resistance. 4,373,007, Cl. 428-412.000.
Russell, Richard G.: *See—*
Goforth, Melvin L.; and Russell, Richard G., 4,372,475, Cl. 228-170.000.
Russell, Robert L.: *See—*
Mitchell, Terry L.; and Russell, Robert L., 4,372,480, Cl. 232-28.000.
Rutgerswerke Aktiengesellschaft: *See—*
Moraw, Klaus; and Paul, Hans-Gunther, 4,373,038, Cl. 523-156.000.
Ruti-Te Strake B.V.: *See—*
Van Mullekom, Hubert P., 4,372,349, Cl. 139-452.000.
Van Mullekom, Hubert P., 4,372,498, Cl. 242-47.010.
Rutledge, Donald R.: *See—*
Gibson, David W.; Hale, Albert L.; Pope, Daniel L.; Rutledge, Donald R.; and Wells, Kirk P., 4,372,535, Cl. 254-319.000.
Ryan, James W. Novel radioassay procedure. 4,372,941, Cl. 424-1.000.
Saab-Scania Aktiebolag: *See—*
Bernhardsson, Ake A.; and Svensson, Kent A., 4,372,276, Cl. 123-525.000.
Gillbrand, Per S.; Axelson, Simon E.; and Jiewertz, Sten R., 4,372,119, Cl. 60-600.000.
Saarbergwerke Aktiengesellschaft: *See—*
Gernhardt, Paul; Danguillier, Wilhelm; Peter, Karl; Grams, Wolfgang; Pohl, Siegfried; and Schnitzler, Peter, 4,372,754, Cl. 48-77.000.
Saffran, Edward P., to Envirex Inc. Disc for aeration of sewage. 4,372,895, Cl. 261-92.000.
Sahay, Ravi B., to Xerox Corporation. Variable power fuser control. 4,372,675, Cl. 355-14.0FU.
Sailers, Earl L., III: *See—*
King, Allen D., Jr.; King, Robert B.; and Sailers, Earl L., III, 4,372,833, Cl. 204-157.10R.
Saint-Gobain Vitrage: *See—*
Krasborn, Gottfried; Roentgen, Paul; Meier, Wilhelm; and Erdweg, Josef, 4,373,130, Cl. 219-203.000.
Saito, Kenichi: *See—*
Yoshikumi, Chikao; Fujii, Takayoshi; Saito, Kenichi; Fujii, Masahiko; and Niimura, Koichi, 4,372,890, Cl. 260-429.00R.
Saitoh, Shinji, to Vlsi Technology Research Association. Method for producing a semiconductor device. 4,372,030, Cl. 29-569.00R.
Saitou, Sinichi: *See—*
Shibata, Tsutomu; Kimura, Kenji; Satoh, Ken; Saitou, Sinichi; Kato, Toshikazu; Watanabe, Seizo; and Ohshima, Ken, 4,372,504, Cl. 242-198.000.
Sakamaki, Hisashi: *See—*
Tomosada, Masahiro; Kimura, Yoshimasa; and Sakamaki, Hisashi, 4,372,673, Cl. 355-14.00R.
Sakano, Hajime; Nakai, Fumio; and Tomari, Yukio, to Sumitomo Naugatuck Co. Ltd. Elastomeric composition. 4,373,063, Cl. 525-64.000.
Salk Institute For Biological Studies, The: *See—*
Brown, Marvin R.; Rivier, Jean E. F.; and Vale, Wylie W., Jr., 4,372,884, Cl. 260-112.50S.
Sallenbach, M. Douglas, to Avery International Corp. Streamlined label verification technique. 4,372,681, Cl. 356-72.000.
Salter, Robert S.; Boorman, Roy S.; and Gilders, Ross D., to Provincial Holdings Ltd. Recovery of lead and silver from minerals and process residues. 4,372,782, Cl. 75-118.00R.
Sambarino, Emilio: *See—*
Fossi, Paolo; and Sambarino, Emilio, 4,372,922, Cl. 423-112.000.
Samples, Randall H.: *See—*
Hilbert, Lloyd E.; and Samples, Randall H., 4,372,891, Cl. 260-453.0SP.
Samuels, Stanley: *See—*
Fish, Irving; Schwartz, Stephen A.; and Samuels, Stanley, 4,372,974, Cl. 424-319.000.
Samuelson, Hans O.; and Abrahamsson, Kjell E., to Mo och Domsjo Aktiebolag. Alkaline oxygen delignification and bleaching of cellulose pulp in the presence of aromatic diamines. 4,372,811, Cl. 162-38.000.
Sandberg, Glenn A., to Formax, Inc. Food patty molding machine with multi-orifice fill passage and stripper plate. 4,372,008, Cl. 17-32.000.
Sanders, David E., to E-Systems, Inc. Fast updating peak detector circuit. 4,373,141, Cl. 307-351.000.
Sanders, Edward. Archery bow with arrow support. 4,372,282, Cl. 124-24.00R.
Sanders, Frank. Fireplace log separator. 4,372,596, Cl. 294-9.000.
Sanderson, Roger S.; and Whelchel, Robert C. Sterilized storage container. 4,372,921, Cl. 422-300.000.
Sanderson, William G.; Sumner, Richard B.; and Kragh, Loren G., to Tower Systems Inc. Dual sheet capillary heat exchanger. 4,372,897, Cl. 261-153.000.

Sandillon, Bernard, to Lutelec Luchaire Equipement. Device for shot-blasting hollow parts of large dimensions. 4,372,140, Cl. 72-53.000.
Sandoz Ltd.: *See—*
Ott, Hans, 4,372,956, Cl. 424-251.000.
Sano, Isao; and Kanamori, Hiroshi, to Nissan Motor Co., Ltd. Stop indicator arrangement for an automotive vehicle. 4,373,153, Cl. 340-87.000.
Sano, Shoichi: *See—*
Osada, Isao; and Sano, Shoichi, 4,372,365, Cl. 152-158.000.
Sano, Takashi: *See—*
Kodama, Yutaka; Oyama, Kaoru; Shimizu, Ryusaku; Nakabayashi, Masao; Nakashima, Yoshifumi; Sano, Takashi; Shibata, Masaaki; and Goden, Kiyoshi, 4,372,949, Cl. 424-199.000.
Sanraku-Ocean Co., Ltd.: *See—*
Oki, Toshikazu; Matsuzawa, Yasue; Ishikura, Tomoyuki; Takeuchi, Tomio; and Umezawa, Hamao, 4,373,094, Cl. 536-6.400.
Sanshin Kogyo Kabushiki Kaisha: *See—*
Iwai, Tomio, 4,372,258, Cl. 123-73.0AD.
Saraisky, Alfred. Inserts for use with web dispensing means. 4,372,500, Cl. 242-55.000.
Saran, Herbert; Witthaus, Martin; Smulders, Eduard; and Schwadtke, Karl, to Henkel Kommanditgesellschaft auf Aktien. Process for the preparation of a stable, readily soluble granulate with a content of bleach activators. 4,372,868, Cl. 252-102.000.
Sarcia, Domenico S., to Oerlikon-Buhrle U.S.A. Inc. In-line cryogenic refrigeration apparatus operating on the Stirling cycle. 4,372,128, Cl. 62-6.000.
Sarre, Olga: *See—*
Ganguly, Ashit K.; Sarre, Olga; and Liu, Yi-Tsung, 4,373,095, Cl. 536-7.100.
Sarto, Jorma O., to Chrysler Corporation. Pre-start engine heat system. 4,372,261, Cl. 123-142.50E.
Sartori, Eugene F.; and Uhrhane, Francis J., to Bell Telephone Laboratories, Incorporated. Maintenance termination device. 4,373,121, Cl. 179-175.30F.
Sato, Hideyori; Inaba, Nobuaki; and Shinohara, Shigeru, to Kabushiki Kaisha Komatsu Seisakusho. Flow divider valve assembly. 4,372,335, Cl. 137-101.000.
Sato, Hisato: *See—*
Toriyama, Kazuhisa; Nakagomi, Tamihito; Sato, Hisato; Fujita, Yutaka; Morita, Katsuhiko; and Arai, Yoshi, 4,372,871, Cl. 252-299.610.
Sato, Toshio; Suzuki, Sho; and Ohmura, Hidemasa, to Kao Soap Co., Ltd. Color deepening agent. 4,373,053, Cl. 524-457.000.
Satoh, Ken: *See—*
Shibata, Tsutomu; Kimura, Kenji; Satoh, Ken; Saitou, Sinichi; Kato, Toshikazu; Watanabe, Seizo; and Ohshima, Ken, 4,372,504, Cl. 242-198.000.
Satoh, Nobuo: *See—*
Takizawa, Junichi; Kojima, Seiichiro; Satoh, Nobuo; and Nakazato, Eiji, 4,372,578, Cl. 280-802.000.
Satoo, Masaharu, to Yoshida Kogyo K.K. Stringer tape for slide fasteners. 4,372,999, Cl. 428-193.000.
Sawada, Hiroyuki: *See—*
Tahara, Susumu; Nishihira, Keigo; Miyatake, Takashi; Sawada, Hiroyuki; and Kita, Junichiro, 4,373,107, Cl. 564-473.000.
Sawyer, Richard D.: *See—*
Sederquist, Richard A.; Szydlowski, Donald F.; and Sawyer, Richard D., 4,372,759, Cl. 55-73.000.
Sazhin, Gennady V.: *See—*
Surovikin, Vitaly F.; Rogov, Alexandr R.; Sazhin, Gennady V.; and Gorjunov, Georgy L., 4,372,936, Cl. 423-450.000.
Scapple, Robert Y.; Keister, Frank Z.; Grieger, Robert G.; and Himmel, Richard P., to Hughes Aircraft Company. Large area hybrid microcircuit assembly. 4,372,037, Cl. 29-613.000.
Schaefer, Edward: *See—*
O'Connor, Donald T.; Lorenzi, Donald E.; Flaherty, John J.; and Schaefer, Edward, 4,372,658, Cl. 354-63.000.
Scharer, Hans R.: *See—*
Gooch, Kendrick J.; Scharer, Hans R.; and Winter, William, 4,372,736, Cl. 425-149.000.
Schayes, Raymond G. G.: *See—*
Gustin, Pol A. G. J.; and Schayes, Raymond G. G., 4,372,045, Cl. 29-846.000.
Schenk-Filterbau Gesellschaft mit beschrankter Haftung: *See—*
Rosswag, Helmut, 4,372,831, Cl. 204-129.800.
Scheps, Marcy L.: *See—*
Chang, Tiang-Shing; Zientek, Lucy J.; Viningauz, Arthur; and Scheps, Marcy L., 4,373,036, Cl. 523-120.000.
Schering Aktiengesellschaft: *See—*
Bolze, Manfred; and Drawert, Manfred, 4,373,085, Cl. 528-291.000.
Schering Corporation: *See—*
Ganguly, Ashit K.; Sarre, Olga; and Liu, Yi-Tsung, 4,373,095, Cl. 536-7.100.
Scheve, Heinrich: *See—*
Hibbel, Josef; Schleper, Bernard; and Scheve, Heinrich, 4,372,253, Cl. 122-7.00R.
Schilling, Franz, to Sfena. Process for eliminating errors in prepositioning pieces to be manufactured by electro-erosion. 4,373,126, Cl. 219-69.00M.
Schimmel, Karl F.: *See—*
Seiner, Jerome A.; and Schimmel, Karl F., 4,373,083, Cl. 528-67.000.
Schirmer, Ulrich: *See—*
Rohr, Wolfgang; Schirmer, Ulrich; and Wuerzer, Bruno, 4,373,105, Cl. 560-27.000.
Schleicher, Thomas R.: *See—*
Drennan, Denis B.; Maylahn, Donald J.; and Schleicher, Thomas R., 4,372,300, Cl. 128-83.000.
Schleper, Bernard: *See—*
Hibbel, Josef; Schleper, Bernard; and Scheve, Heinrich, 4,372,253, Cl. 122-7.00R.
Schmeling, Robert H. Bag closure. 4,372,363, Cl. 150-4.000.
Schmidt, Arlo R. Fuel vaporizing carburetor. 4,372,275, Cl. 123-522.000.
Schmidt, Gerhard; Ritter, Klaus; Ritter, Gerhard; and Ritter, Josef, to EVG Entwicklungs-und-Verwertungs Gesellschaft mbH. Machine for the automatic production of welded lattice girders. 4,372,350, Cl. 140-112.000.
Schmidt, Hans-Joachim: *See—*
Wunder, Friedrich; Leupold, Ernst I.; Hachenberg, Horst; Schmidt, Hans-Joachim; and Unger, Klaus, 4,372,878, Cl. 252-455.00Z.
Schmitt, Joseph J.: *See—*
Haskett, Thomas E.; and Schmitt, Joseph J., 4,373,127, Cl. 219-69.00E.
Schmitt, Werner; Purrmann, Robert; Jochum, Peter; and Hubner, Heinz-Joachim, to Espe Fabrik Parmazeutischer Praparate GmbH. Light curable acrylic dental composition with calcium fluoride pigment. 4,372,836, Cl. 204-159.230.
Schneider, Christian: *See—*
Pohlmann, Erich; and Doetsch, Hans-Peter, 4,372,127, Cl. 62-6.000.
Schnitzler, Peter: *See—*
Gernhardt, Paul; Danguillier, Wilhelm; Peter, Karl; Grams, Wolfgang; Pohl, Siegfried; and Schnitzler, Peter, 4,372,754, Cl. 48-77.000.
Schomburg, Calvin; and Dotts, Robert L., to United States of America, National Aeronautics and Space Administration. High temperature silicon carbide impregnated insulating fabrics. 4,373,003, Cl. 428-241.000.
Schonfelder, Manfred: *See—*
Reichmann, Wolfgang; Konig, Klaus; and Schonfelder, Manfred, 4,373,080, Cl. 528-45.000.
Schonthaler, Karl; and Hartl, Gerhard, to Semperit Aktiengesellschaft. Level crossing for railroads and method of fabricating the same. 4,372,488, Cl. 238-8.000.
Schopen, Joseph L.: *See—*
Miller, Robert A.; Larson, Kenneth W.; and Schopen, Joseph L., 4,372,100, Cl. 53-428.000.
Schroder, Gunter: *See—*
Besecke, Siegmund; Fink, Herbert; Sutterlin, Norbert; Markert, Gerhard; Schroder, Gunter; and Tilch, Willi, 4,373,056, Cl. 524-547.000.
Schrott, Steve. Clean-out tool for sinks and the like. 4,371,991, Cl. 4-255.000.
Schubert, Paul C.; and Thakrar, Anil C., to AMP Incorporated. High voltage flame retardant EPOM insulating compositions. 4,373,048, Cl. 524-371.000.
Schuetzle, Dennis: *See—*
Butler, James W.; Colvin, Alex D.; and Schuetzle, Dennis, 4,372,155, Cl. 73-114.000.
Schuhmann, Reinhardt, Jr.: *See—*
Queneau, Paul E.; and Schuhmann, Reinhardt, Jr., 4,372,540, Cl. 266-171.000.
Schultz, Gary E.; and Weidner, Albert J., to Sperry Corporation. Indirect address computation circuit. 4,373,182, Cl. 364-200.000.
Schulz, Donald N.: *See—*
Gunesin, Binnur; Hamed, Gary R.; Kang, Jung W.; and Schulz, Donald N., 4,373,068, Cl. 525-218.000.
Schulz, Volkmar: *See—*
Rampel, Hans; Hess, Peter; and Schulz, Volkmar, 4,372,521, Cl. 248-430.000.
Schumacher, Hermann; Molineus, Tilman; and Ridder, Detlef. Pressure sensitive copying material. 4,372,581, Cl. 282-27.500.
Schurger, Ranier: *See—*
Kiener, Heinz; Neder, Gunter; and Schurger, Ranier, 4,372,628, Cl. 308-187.100.
Schwadtke, Karl: *See—*
Saran, Herbert; Witthaus, Martin; Smulders, Eduard; and Schwadtke, Karl, 4,372,868, Cl. 252-102.000.
Schwartz, David M. Solar heat exchanger. 4,372,291, Cl. 126-443.000.
Schwartz, Richard A., to PPG Industries, Inc. Frozen emulsion initiation of polyol (allyl carbonate). 4,373,075, Cl. 526-230.500.
Schwartz, Stephen A.: *See—*
Fish, Irving; Schwartz, Stephen A.; and Samuels, Stanley, 4,372,974, Cl. 424-319.000.
Schwarz, Cornelia: *See—*
Hofbauer, Peter; Gaschler, Erich; and Schwarz, Cornelia, 4,372,257, Cl. 123-68.000.
Sciortino, August M. Self-locking covered coin receptacle and automatic reset mechanism therefor. 4,372,479, Cl. 232-15.000.
Scott, Robert H.: *See—*
Whitten, Charles M.; Scott, Robert H.; and Mansfield, Vaughn, 4,372,756, Cl. 48-202.000.
Scott, William R.: *See—*
Gassaway, Gary S.; Scott, William R.; and Runge, Richard J., 4,373,197, Cl. 367-36.000.
Searle, Robert J. G.: *See—*
Day, Janet A.; and Searle, Robert J. G., 4,372,776, Cl. 71-90.000.
Sebald, Dorothy Davis, executrix: *See—*
Sebald, Joseph F., deceased, 4,372,126, Cl. 60-669.000.

Sebald, Joseph F., deceased (by Sebald, Dorothy Davis, executrix), to Heat Power Products Corporation. Closed cycle system for generating usable energy from waste heat sources. 4,372,126, Cl. 60-669.000.
Sebestyen, Gyula: *See—*
Takacs, Kalman; Papp, Maria H.; Kovacs, Gabor; Ajzert, Ilona K.; Simay, Antal; Nagy, Peter L.; Puskas, Marian E.; Sebestyen, Gyula; Stadler, Istvan; and Sumeghy, Zoltan, 4,373,104, Cl. 546-145.000.
Sechi, Lucio, to Danieli & C. Officine Meccaniche S.p.A. Motor vehicle for use on roads and railways. 4,372,220, Cl. 105-215.00C.
SEDCO, Inc.: *See—*
Hammett, Dillard S., 4,372,395, Cl. 169-69.000.
Sederquist, Richard A.; Szydlowski, Donald F.; and Sawyer, Richard D., to United Technologies Corporation. Electrolyte vapor condenser. 4,372,759, Cl. 55-73.000.
Seeger, Gunter: *See—*
Wiemann, Dieter; Seeger, Gunter; and Greten, Berndt, 4,372,899, Cl. 264-25.000.
Segard, Emile: *See—*
Berneman, Armand; David, Alain; Horaud, Florian; and Segard, Emile, 4,373,027, Cl. 435-240.000.
Seidel, Michael J.; and Dixon, Kevin L. Method for making enamel beads and resulting product. 4,372,993, Cl. 427-193.000.
Seiner, Jerome A.; and Schimmel, Karl F., to PPG Industries, Inc. Process of making urethane rheology modifiers. 4,373,083, Cl. 528-67.000.
Seipp, Ulrich; Vollenberg, Werner; Mueller, Bernd; and Michel, Gudrun, to Gruenenthal GmbH. Heterocyclic prostaglandin type compounds, medicaments containing them and processes for the preparation and use of these heterocyclic compounds and medicaments. 4,372,971, Cl. 424-285.000.
Sekisui Kagaku Kogyo Kabushiki Kaisha: *See—*
Kato, Shogenobu, 4,372,529, Cl. 251-151.000.
Semperit Aktiengesellschaft: *See—*
Schonthaler, Karl; and Hartl, Gerhard, 4,372,488, Cl. 238-8.000.
Serganoli, Enzo, to G. D. Societa' per Azioni. Manufacturing machine for producing two continuous cigarette rods. 4,372,326, Cl. 131-84.00B.
Sergeant, Timothy L., to Kendall Company, The. Diaper with blended yarns. 4,372,310, Cl. 128-284.000.
Sewell, James D.; and Gordon, Norman E. Cellular void filler. 4,372,717, Cl. 410-154.000.
Seybold, Guenther: *See—*
Eilingsfeld, Heinz; Hansen, Guenter; Seybold, Guenther; and Zeidler, Georg, 4,372,885, Cl. 260-158.000.
Seyfarth, Gerhard: *See—*
Aurich, Horst; Bochmann, Brigitta; Grosse, Klaus; Kohler, Eberhard; Nestler, Michael; Ochsenfarth, Hans-Christian; and Seyfarth, Gerhard, 4,372,548, Cl. 271-18.300.
Sfena: *See—*
Schilling, Franz, 4,373,126, Cl. 219-69.00M.
Shaffer, John W.; and Gavenonis, Thomas L., to GTE Products Corporation. Pyrotechnic cap with mechanically desensitized composition. 4,372,210, Cl. 102-204.000.
Shannon, James A.; and McClure, B. W. Baseball-pitching machine. 4,372,284, Cl. 124-78.000.
Shapiro, Julius; and Eliason, Andrew, to Hair Free Centers. Impedance sensing epilator. 4,372,315, Cl. 128-303.180.
Sharp Kabushiki Kaisha: *See—*
Osaki, Mikio; and Kita, Sumio, 4,373,164, Cl. 346-75.000.
Yanagiuchi, Shigenobu; and Kanou, Ikuo, 4,373,192, Cl. 364-900.000.
Sharp, Thurman V. Escape device. 4,372,422, Cl. 182-5.000.
Shaw & Slavsky, Inc.: *See—*
Slavsky, Robert J., Sr., 4,372,066, Cl. 40-124.100.
Shell Internationale Research Maatschappij B.V.: *See—*
Hadler, Malcolm R.; Woodward, David R.; and Godfrey, Andrew A., 4,372,970, Cl. 424-282.000.
Shell Oil Company: *See—*
Cornelisse, Roelof, 4,372,925, Cl. 423-226.000.
Davies, David R.; Richardson, Edwin A.; and Van Zanten, Marinus, 4,372,385, Cl. 166-281.000.
Day, Janet A.; and Searle, Robert J. G., 4,372,776, Cl. 71-90.000.
Germaine, Gilbert R.; and Darnanville, Jean P., 4,372,879, Cl. 252-470.000.
McCullough, Glenn R., 4,372,927, Cl. 423-244.000.
Shepard, Steve A.: *See—*
Haag, George A.; Fogg, O. Douglas; Greenley, Gordon A.; Shepard, Steve A.; and Terry, F. Duncan, 4,373,193, Cl. 364-900.000.
Sherman, Michael I.: *See—*
Richter, Johan C. F. C.; and Sherman, Michael I., 4,372,711, Cl. 406-63.000.
Sherwood Medical Industries, Inc.: *See—*
Cornell, William D.; Crouther, Ronald; Dyer, Howard P.; and Ranford, Alan B., 4,372,336, Cl. 137-205.000.
Sherwood Selpac Corp.: *See—*
Trinkwalder, Joseph C., Jr., 4,372,343, Cl. 137-614.200.
Shevada, Mike. Bearing pusher. 4,372,024, Cl. 29-260.000.
Shibata, Masaaki: *See—*
Kodama, Yutaka; Oyama, Kaoru; Shimizu, Ryusaku; Nakabayashi, Masao; Nakashima, Yoshifumi; Sano, Takashi; Shibata, Masaaki; and Goden, Kiyoshi, 4,372,949, Cl. 424-199.000.
Shibata, Tadayoshi: *See—*
Hara, Yoshio; and Shibata, Tadayoshi, 4,372,660, Cl. 354-180.000.
Shibata, Tsutomu; Kimura, Kenji; Satoh, Ken; Saitou, Sinichi; Kato, Toshikazu; Watanabe, Seizo; and Ohshima, Ken, to Olympus Optical Co., Ltd. Magnetic record tape protective device for a tape cassette. 4,372,504, Cl. 242-198.000.
Shibazaki, Kenji: *See—*
Miyata, Shin; Kono, Tateomi; Shibazaki, Kenji; and Utsunomiya, Yoichi, 4,372,676, Cl. 355-14.00C.
Shichijo, Kojiro. Structure for roofing tile. 4,372,090, Cl. 52-536.000.
Shido, Nobuhiro: *See—*
Yamamoto, Hitoshi; Watanabe, Masaki; and Shido, Nobuhiro, 4,372,417, Cl. 180-215.000.
Shih, David H.: *See—*
Christensen, Burton G.; and Shih, David H., 4,372,965, Cl. 424-274.000.
Shimada Shoji Co., Ltd.: *See—*
Shimada, Yukio, 4,372,998, Cl. 428-193.000.
Shimada, Yukio, to Shimada Shoji Co., Ltd. Heat adhesive tapes for finishing hems of trousers, skirts and like articles. 4,372,998, Cl. 428-193.000.
Shimadzu Corporation: *See—*
Komoto, Akira; and Tsuji, Tomohiro, 4,372,406, Cl. 177-212.000.
Shimamoto, Takeshi; Arai, Kazuo; and Kobayashi, Kazutsugu, to Matsushita Electric Industrial Co., Ltd. Remote game apparatus. 4,372,558, Cl. 273-238.000.
Shimizu, Masami, to Canon Kabushiki Kaisha. Moisture- and dust-proof device for rotating operation part of camera. 4,372,664, Cl. 354-288.000.
Shimizu, Michiro; and Tsunoda, Masakazu, to Nissan Motor Company, Limited. Voice trip information system for an automotive vehicle. 4,373,116, Cl. 179-1.0SM.
Shimizu, Ryusaku: *See—*
Kodama, Yutaka; Oyama, Kaoru; Shimizu, Ryusaku; Nakabayashi, Masao; Nakashima, Yoshifumi; Sano, Takashi; Shibata, Masaaki; and Goden, Kiyoshi, 4,372,949, Cl. 424-199.000.
Shimonaru, Tuneyoshi: *See—*
Yamagami, Seiji; Nonaka, Hirohiko; Shimonaru, Tuneyoshi; Takashima, Koichi; and Kato, Yasuhiko, 4,372,846, Cl. 210-86.000.
Shin-Etsu Chemical Co. Ltd.: *See—*
Imada, Kiyoshi; Ueno, Susumu; Nishina, Yasuhide; and Nomura, Hirokazu, 4,372,986, Cl. 427-40.000.
Shinohara, Shigeru: *See—*
Sato, Hideyori; Inaba, Nobuaki; and Shinohara, Shigeru, 4,372,335, Cl. 137-101.000.
Shionogi & Co., Ltd.: *See—*
Okumura, Tamotsu; and Kadono, Tetsuro, 4,372,850, Cl. 210-198.300.
Shirosaki, Kiyotaka: *See—*
Sugimoto, Yoshikazu; Shirosaki, Kiyotaka; Kawaguchi, Masashi; and Takeshima, Masaki, 4,372,859, Cl. 210-739.000.
Shirouchi, Shoji: *See—*
Sugiyama, Takeshi; Shirouchi, Shoji; Tsuchiya, Osamu; Onoda, Mamoru; Yamashita, Atsuko; Fujita, Isao; and Imanishi, Nobuyuki, 4,372,779, Cl. 75-0.50R.
Shiryaev, Grigory V.: *See—*
Sokolov, Sergei S.; Komovsky, Vadim R.; Vlasov, Leonid I.; Boretsky, Boris M.; and Shiryaev, Grigory V., 4,372,121, Cl. 60-606.000.
Shmuter, Shimshon: *See—*
Kaganovsy, Yaacov; Kustanovich, Yosef; Shmuter, Shimshon; Gelfer, Vadim; and Muchnik, Shimon, 4,372,818, Cl. 202-83.000.
Short, Glyn D.; and Whittam, Thomas V., to Imperial Chemical Industries Limited. Zeolite Nu-3. 4,372,930, Cl. 423-326.000.
Shudo, Hirokazu: *See—*
Harigane, Kotaro; Takahashi, Kenichi; Shudo, Hirokazu; and Tando, Shuichi, 4,372,802, Cl. 156-538.000.
Shur, Victor: *See—*
Malachowski, Michael A.; Shur, Victor; and Thettu, Raghulinga R., 4,372,668, Cl. 355-3.00R.
Shutt, Sidney G., to Rockwell International Corporation. Three-axis accelerometer having dynamic bias compensation. 4,372,162, Cl. 73-517.00B.
Shutt, Sidney G., to Rockwell International Corporation. Suspension for three-axis accelerometer. 4,372,520, Cl. 248-604.000.
Sicard, Jean-Paul: *See—*
Matthews, William G.; Sicard, Jean-Paul; and Anderson, Richard A., 4,372,857, Cl. 210-673.000.
Siemens Aktiengesellschaft: *See—*
Dengler, Robert; and Meyer, Franz J., 4,373,171, Cl. 360-71.000.
Franke, Kurt, 4,373,144, Cl. 313-338.000.
Grewal, Virinder; and Reindl, Werner, 4,372,809, Cl. 156-656.000.
Herold, Georg; and Kabs, Hermann, 4,372,907, Cl. 264-265.000.
Menzel, Guenther, 4,372,989, Cl. 427-53.100.
Siemens-Allis, Inc.: *See—*
Bollinger, Parker A., Jr., 4,372,180, Cl. 74-606.00R.
Sigel, Carl W.: *See—*
Duch, David S.; Nichol, Charles A.; and Sigel, Carl W., 4,372,957, Cl. 424-251.000.
Silber, Philip. Article of clothing having built-in bust support. 4,372,320, Cl. 128-455.000.
Silberberg, Joseph: *See—*
Jung, Alfred K.; Silberberg, Joseph; and Weil, Edward D., 4,373,103, Cl. 544-195.000.
Silkensen, Ralph D.: *See—*
Robinson, Neil L.; and Silkensen, Ralph D., 4,373,173, Cl. 360-121.000.
Simay, Antal: *See—*
Takacs, Kalman; Papp, Maria H.; Kovacs, Gabor; Ajzert, Ilona K.; Simay, Antal; Nagy, Peter L.; Puskas, Marian E.; Sebestyen,

Gyula; Stadler, Istvan; and Sumeghy, Zoltan, 4,373,104, Cl. 546-145.000.
Simeonoff, George. Sectional wall form system. 4,372,522, Cl. 249-18.000.
Simeth, Claus: *See—*
Herzan, Georg; and Simeth, Claus, 4,372,204, Cl. 101-145.000.
Simmons U.S.A. Corporation: *See—*
Callaway, Milton A., 4,371,998, Cl. 5-451.000.
Simonds, Gary; and McKee, Arnold D., to Victor United, Inc. Adjustable cable end bracket for compound bow. 4,372,285, Cl. 124-90.000.
Simonelli, Robert J.: *See—*
Russell, Frank S.; and Simonelli, Robert J., 4,372,141, Cl. 72-131.000.
Simonis, Jurgen; and Czok, Helmut, to Gebruder Welger GmbH & Co. Kommanditgesellschaft. Pick-up baler for agricultural material. 4,372,104, Cl. 56-341.000.
Simpkin, Gordon T.: *See—*
Cross, Raymond P.; and Simpkin, Gordon T., 4,372,774, Cl. 65-114.000.
Simpson, Harold G., to Star Manufacturing Co. Construction system and fastener therefore. 4,372,014, Cl. 24-201.00C.
Sims, Larry A.: *See—*
Grossmann, Frederic; and Sims, Larry A., 4,372,303, Cl. 128-132.00D.
Singer, Arnold H.; and Holm, Ronald T., to United States of America, Navy. Multiple thin film absorption of reflected substrate modes in waveguide system. 4,372,642, Cl. 350-96.120.
Singer, Arnold J.: *See—*
Lover, Myron J.; Singer, Arnold J.; Lynch, Donald M.; and Rhodes, William E., III, 4,372,977, Cl. 424-342.000.
Singer Company, The: *See—*
Dunn, William H.; and Horey, Leonard I., 4,372,232, Cl. 112-158.00E.
Glore, Thomas G., 4,372,358, Cl. 144-117.00R.
Killinger, Karl H.; Johnson, Kenneth M.; and Totino, Peter J., 4,372,234, Cl. 112-258.000.
Larsen, Robert H.; and Giaimo, Anthony, 4,372,502, Cl. 242-149.000.
Odermann, Charles R.; and Wurst, John W., 4,372,231, Cl. 112-158.00B.
Odermann, Charles R., 4,372,233, Cl. 112-235.000.
Szostak, Jan, 4,372,703, Cl. 403-324.000.
Totino, Peter J.; and Davidson, Donald R., 4,372,237, Cl. 112-308.000.
Vermillion, Don W., 4,372,004, Cl. 15-182.000.
Sioli, Giancarlo: *See—*
Spaziante, Placido M.; and Sioli, Giancarlo, 4,372,827, Cl. 204-95.000.
Six, Volker: *See—*
Koster, Robertus J. C.; Six, Volker; and Hale, Peter, 4,372,882, Cl. 252-529.000.
SKF Kugellagerfabriken GmbH: *See—*
Kiener, Heinz; Neder, Gunter; and Schurger, Ranier, 4,372,628, Cl. 308-187.100.
Skinner, Neal G., to Halliburton Company. Subsurface control valve. 4,372,388, Cl. 166-334.000.
Skyba, Dorothea, legal representative: *See—*
Wiener, Dieter; Sulzer, Gerd; Skyba, Rudolf, deceased; and Pomp, Jurgen, 4,372,085, Cl. 51-216.0ND.
Skyba, Rudolf, deceased: *See—*
Wiener, Dieter; Sulzer, Gerd; Skyba, Rudolf, deceased; and Pomp, Jurgen, 4,372,085, Cl. 51-216.0ND.
Skypala, Louis M., to Budd Company, The. Wire raceway for attachment under the floor of a railway car. 4,372,510, Cl. 248-58.000.
Slager, Ralph E.: *See—*
Black, John W.; and Slager, Ralph E., 4,372,738, Cl. 425-451.900.
Slavsky, Robert J., Sr., to Shaw & Slavsky, Inc. Highlighting marker for merchandise price sign. 4,372,066, Cl. 40-124.100.
Sleeper & Hartley Corp.: *See—*
Russell, Frank S.; and Simonelli, Robert J., 4,372,141, Cl. 72-131.000.
Small, Eugene D. Cotton treating process. 4,372,002, Cl. 8-156.000.
Smies, Frederic D.: *See—*
Chao, Tai S.; Smith, Aubrey C., Jr.; and Smies, Frederic D., 4,372,861, Cl. 252-29.000.
Smith, Abbott: *See—*
Carpenter, Vance J.; and Smith, Abbott, 4,372,670, Cl. 355-8.000.
Smith, Aubrey C., Jr.: *See—*
Chao, Tai S.; Smith, Aubrey C., Jr.; and Smies, Frederic D., 4,372,861, Cl. 252-29.000.
Smith, Gerald J.; and Adams, Ronald W., to Albany International Corp. Molded textile air conditioning and heat duct. 4,373,001, Cl. 428-212.000.
Smith International, Inc.: *See—*
Neilson, William J., 4,372,624, Cl. 384-94.000.
Smith, Jimmie L. Roof cooling system. 4,372,493, Cl. 239-208.000.
Smith Kline & French Laboratories Limited: *See—*
Durant, Graham J.; and Miles, Peter D., 4,372,963, Cl. 424-272.000.
Smith, Michael B.; and Nolte, Kenneth G., to Standard Oil Company (Indiana). Method for determination of fracture closure pressure. 4,372,380, Cl. 166-250.000.
Smith, Michael C. Air drag reducing tail gate. 4,372,601, Cl. 296-50.000.
Smith, Richard D. Molded base plate for rollerskates attachable to shoes. 4,372,566, Cl. 280-11.190.
Smith, Rodney D. High temperature and high pressure fuel injection apparatus for internal combustion engines. 4,372,278, Cl. 123-557.000.
Smulders, Eduard: *See—*
Saran, Herbert; Witthaus, Martin; Smulders, Eduard; and Schwadtke, Karl, 4,372,868, Cl. 252-102.000.
Snider, Kenneth D.: *See—*
Haasl, Michael J.; Snider, Kenneth D.; and Murphy, William L., 4,372,982, Cl. 426-549.000.
Snow, Robert E.: *See—*
Lawver, James E.; McClintock, Walter O.; and Snow, Robert E., 4,372,843, Cl. 209-12.000.
Snyder, Clair W., Jr.: *See—*
Ritchie, Leon T.; Snyder, Clair W., Jr.; Toeppen, Thurston H.; and Woratyla, John A., 4,372,634, Cl. 339-17.00C.
Snyder, William R.; and Feuerstein, Diane, to Betz Laboratories, Inc. Method and composition for treating aqueous mediums. 4,372,870, Cl. 252-180.000.
Societe Alsacienne de Constructions Mecaniques de Mulhouse: *See—*
Gauvain, Roger, 4,372,010, Cl. 19-159.00R.
Societe Anonyme D.B.A.: *See—*
Delaunay, Jean; and Le Marchand, Claude, 4,372,428, Cl. 188-73.350.
Societe Anonyme Dite: Laboratoire L. Lafon: *See—*
Lafon, Louis, 4,372,969, Cl. 424-282.000.
Societe Anonyme Parinter: *See—*
Berend, Francis T., 4,371,988, Cl. 2-167.000.
Societe d'Applications des Machines Motrices: *See—*
Devaud, Gerard L., 4,372,702, Cl. 403-24.000.
Societe D'Assistance Technique Pour Produits Nestle S.A.: *See—*
Bauer, Heinz, 4,372,984, Cl. 426-637.000.
Societe de Fabrication d'Instruments de Mesure (S.F.I.M.): *See—*
Gogniat, Guy; and Grobois, Jacques, 4,372,160, Cl. 73-178.00R.
Societe Industrielle Bertrand Faure: *See—*
Boisset, Bernard, 4,372,609, Cl. 297-362.000.
Sohler, Lawrence J. Electrical connector for tapping into a fuse block. 4,372,638, Cl. 339-273.00F.
Sokolov, Sergei S.; Komovsky, Vadim R.; Vlasov, Leonid I.; Boretsky, Boris M.; and Shiryaev, Grigory V. Power-plant. 4,372,121, Cl. 60-606.000.
Solar Kinetics, Inc.: *See—*
Hutchison, Joseph A., 4,372,027, Cl. 29-448.000.
Hutchison, Joseph A., 4,372,651, Cl. 350-292.000.
Sonco Wholesale Fence Inc.: *See—*
Long, Clyde A., 4,372,992, Cl. 427-185.000.
Sonoi, Hidekazu: *See—*
Tamura, Shoichi; Asami, Takayoshi; and Sonoi, Hidekazu, 4,372,765, Cl. 62-29.000.
Sörensen, Roald H. Basketball backboard. 4,372,555, Cl. 273-1.50R.
Soula, Gerard, to Rhone-Poulenc Industries. Sequestering agents. 4,373,070, Cl. 525-332.200.
Source Technology, Inc.: *See—*
Narasimhan, Mandayam J., Jr.; and Thirmulachar, Mandayam J., 4,372,753, Cl. 44-52.000.
Southwire Company: *See—*
Starnes, Ralph E., Jr., 4,372,539, Cl. 266-104.000.
Soutwire Company: *See—*
Chia, E. Henry, 4,372,542, Cl. 266-229.000.
Spang Industries, Inc.: *See—*
Yu, Bu-Fan B.; and Goldman, Alex, 4,372,865, Cl. 252-62.620.
Spare Trunk Corporation: *See—*
Campbell, James H., 4,372,568, Cl. 280-63.000.
Spartanics, Ltd.: *See—*
Mohan, William L.; Willits, Samuel P.; and Kleeman, Thomas E., 4,373,135, Cl. 377-8.000.
Spaziante, Placido M.; and Sioli, Giancarlo, to Panclor S.A. Novel horizontal diaphragmless electrolyzer. 4,372,827, Cl. 204-95.000.
Spector, George: *See—*
Benenate, Louis; and Spector, George, 4,372,064, Cl. 37-117.500.
Stover, Henry D., Jr.; and Spector, George, 4,372,198, Cl. 99-340.000.
Speranza, George P.; Cuscurida, Michael; and Zimmerman, Robert L., to Texaco Inc. Modification of polyols with epoxy resins for use in flexible polyurethane foams. 4,373,034, Cl. 521-177.000.
Sperry Corporation: *See—*
Allen, Terry S.; and Jacobson, Peter E., 4,372,633, Cl. 339-5.00M.
De Coene, Frans J. G. C.; Naaktgeboren, Adrianus; and Vansteelant, Marc G., 4,372,723, Cl. 414-111.000.
Linde, James P., 4,373,180, Cl. 364-200.000.
McIlwain, Irwin D.; and McDuffie, James W., 4,372,103, Cl. 56-14.400.
Schultz, Gary E.; and Weidner, Albert J., 4,373,182, Cl. 364-200.000.
Vansteelant, Marc G., 4,372,588, Cl. 289-8.000.
Vansteelant, Marc G., 4,372,589, Cl. 289-13.000.
Villa, Paul Y.; and Day, Alvin D., 4,372,632, Cl. 312-311.000.
Spin Physics, Inc.: *See—*
Bagby, John F., 4,372,036, Cl. 29-603.000.
Sprague Electric Company: *See—*
Finkelstein, Manuel; Ross, Sidney D.; and Dunkl, Franz S., 4,373,176, Cl. 361-433.000.
Finkelstein, Manuel; Dunkl, Franz S.; and Ross, Sidney D., 4,373,177, Cl. 361-433.00A.
Spring, Gorden W., to Tomy Corporation. Toy movable by alternately relocating individual members of a pair of body parts. 4,372,078, Cl. 46-150.000.
Sprout, James C.: *See—*
Berman, Herbert L.; and Sprout, James C., 4,372,690, Cl. 374-29.000.

Stacy, Carl J.: *See—*
Wood, Jerold D.; and Stacy, Carl J., 4,373,041, Cl. 524-77.000.
Stadler, Istvan: *See—*
Takacs, Kalman; Papp, Maria H.; Kovacs, Gabor; Ajzert, Ilona K.; Simay, Antal; Nagy, Peter L.; Puskas, Marian E.; Sebestyen, Gyula; Stadler, Istvan; and Sumeghy, Zoltan, 4,373,104, Cl. 546-145.000.
Staffieri, Lamberto. Thigh prosthesis. 4,371,990, Cl. 3-28.000.
Stafford, Donald C., to Chicago Bridge & Iron Company. Ball and socket joint with fluid flow capability through the joint. 4,372,344, Cl. 137-615.000.
Stanczak, Edmund A.; and Ringe, Stephen J., to Fruehauf Corporation. Double pivot door for cargo vehicles. 4,372,603, Cl. 296-146.000.
Standard-Keil Hardware Mfg. Co., a Division of Buildex Inc.: *See—*
Cook, Sanford L.; Molisani, Justin J.; and Dennison, Kenneth I., Jr., 4,372,591, Cl. 292-221.000.
Standard Oil Company (Indiana): *See—*
Smith, Michael B.; and Nolte, Kenneth G., 4,372,380, Cl. 166-250.000.
Stankiewicz, Jerzy: *See—*
Winkler, Jerzy; and Stankiewicz, Jerzy, 4,373,113, Cl. 174-179.000.
Star Manufacturing Co.: *See—*
Kim, Kwon S., 4,372,901, Cl. 264-46.500.
Simpson, Harold G., 4,372,014, Cl. 24-201.00C.
Starnes, Ralph E., Jr., to Southwire Company. Renewable, strand centering annealer sheave. 4,372,539, Cl. 266-104.000.
Starp, Franz; and Rittmann, Dieter. Diaphragm setting device for photographic camera. 4,372,662, Cl. 354-273.000.
Statni vyzkumny ustav materialu: *See—*
Landa, Vaclav; Vitek, Jaromir; Nejedly, Pavel; Holpuch, Vladimir; Bubelis, Juozas; and Stepanovicius, Atanas-Nemezyus, 4,372,826, Cl. 204-43.00T.
Stauffer Chemical Company: *See—*
Jung, Alfred K.; Silberberg, Joseph; and Weil, Edward D., 4,373,103, Cl. 544-195.000.
Steer, Peter L.; and Edwards, John V., to Kingsdown Medical Consultants Ltd. Ostomy bag including filter means. 4,372,308, Cl. 128-283.000.
Steiling, Vigil, to Globe Machine Manufacturing Company. Machine for profiling wood panel to simulate lap siding. 4,372,357, Cl. 144-114.00R.
Steinbrecher, Lester; and Hall, Wilbur S., to Amchem Products, Inc. Process and composition for coating metals. 4,373,050, Cl. 524-405.000.
Stenberg, Kaj: *See—*
Larsson, Lars-Ake L.; Gullberg, Claes-Ake; Stenberg, Kaj; and Boberg, Nils G. E., 4,372,484, Cl. 494-14.000.
Stenger, Antoine: *See—*
Mouzin, Gilbert; Cousse, Henri; Stenger, Antoine; and Casadio, Sylvano, 4,372,975, Cl. 424-324.000.
Stening, Goran: *See—*
Helgstrand, Ake J. E.; Johannson, Karl N.; Misiorny, Alfons; Noren, Jan O.; and Stening, Goran, 4,372,894, Cl. 260-941.000.
Stepanovicius, Atanas-Nemezyus: *See—*
Landa, Vaclav; Vitek, Jaromir; Nejedly, Pavel; Holpuch, Vladimir; Bubelis, Juozas; and Stepanovicius, Atanas-Nemezyus, 4,372,826, Cl. 204-43.00T.
Stephens, Donald E.; and Ehret, Robert J., to Beckman Instruments, Inc. Flow monitoring method and apparatus. 4,372,150, Cl. 73-40.50R.
Stephens, Frank M., Jr.: *See—*
Tolman, Radon; and Stephens, Frank M., Jr., 4,372,755, Cl. 48-197.00R.
Stephens, Geoffrey B.: *See—*
Bergeron, D. L.; Fleming, Daniel J.; and Stephens, Geoffrey B., 4,373,166, Cl. 357-15.000.
Sterling Drug Inc.: *See—*
Brandenburg, Bruce L.; and Bauer, Gerald L., 4,372,940, Cl. 423-567.00A.
Diana, Guy D., 4,372,976, Cl. 424-331.000.
Stern, Harold; and Suleiman, Elisabeth, to International Playtex, Inc. Brassiere. 4,372,322, Cl. 128-491.000.
Sternberg, James C., to Beckman Instruments, Inc. Photometer with rotating sample container. 4,372,683, Cl. 356-338.000.
Steyr-Daimler-Puch Aktiengesellschaft: *See—*
Dolenc, Anton; and Visek, Tomas, 4,372,179, Cl. 74-579.00E.
Stiernspetz, Allan, to Datasaab AB. Device and a method for withdrawing articles in the form of sheets from a stack of articles. 4,372,549, Cl. 271-23.000.
Stillman, Gordon B.; and White, Charles R., to General Electric Company. Submersible equipment handling system. 4,372,597, Cl. 294-67.0DA.
Stockman, Richard F., to Air Preheater Company, Inc., The. Rotor support. 4,372,370, Cl. 165-8.000.
Stolzer Lagertechnik Gesellschaft mit beschrankter Haftung: *See—*
Stolzer, Paul, 4,372,724, Cl. 414-281.000.
Stolzer, Paul, to Stolzer Lagertechnik Gesellschaft mit beschrankter Haftung. Apparatus and method for storing rod stock and supplying same to a servicing machine. 4,372,724, Cl. 414-281.000.
Stone Container Corp.: *See—*
Konopko, Matthew S., 4,372,446, Cl. 206-586.000.
Stover, Henry D., Jr.; and Spector, George. Lantern hot plate. 4,372,198, Cl. 99-340.000.
Stow/Davis Furniture Company: *See—*
Propst, Paul L.; Richardson, Donald A.; and Hinrichs, Carl B., 4,372,629, Cl. 312-223.000.
Strahan, Virgil H.; James, Kenneth A.; and Quick, William H., to Rockwell International Corporation. Birefringent electromagnetic transmission line that preserves the state of polarized radiation propagating therein. 4,372,646, Cl. 350-96.310.
Stramentinoli, Giorgio; and Gennari, Federico, to BIORESEARCH S.r.l. Process for preparing adenosine derivatives of anti-inflammatory and analgesic activity. 4,373,097, Cl. 536-26.000.
Stratta, John G.: *See—*
Stratta, Peter J.; Stratta, John G.; and Camp, Douglas M., 4,372,006, Cl. 16-105.000.
Stratta, Peter J.; Stratta, John G.; and Camp, Douglas M., to Harbor Tool Mfg. Inc. Freight door roller housing. 4,372,006, Cl. 16-105.000.
Straub, Harold E.: *See—*
Dehart, Marv L.; Kloostra, M. Leon; and Straub, Harold E., 4,372,170, Cl. 73-861.610.
Strauss, Harry W.; Callahan, Ronald J.; and Froelich, Jerry W., to Massachusetts General Hospital, The. Method and apparatus for radiolabeling red blood cells. 4,372,294, Cl. 128-1.100.
Strickland, Alvah T.: *See—*
Hanson, Paul A.; Hightower, John D.; and Strickland, Alvah T., 4,372,359, Cl. 114-244.000.
Stroup, John F.; Robins, Harold J.; and Teeple, Michael, to Van Dorn Company. Method for molding hollow plastic articles. 4,372,910, Cl. 264-532.000.
Stuart, James M. Weight, volume or density measuring system. 4,372,405, Cl. 177-25.000.
Stubblefield, Jerry D. Shoe sole construction. 4,372,058, Cl. 36-32.00R.
Studley, Charles F., Jr.: *See—*
Moore, Michael J.; and Studley, Charles F., Jr., 4,372,725, Cl. 414-460.000.
Stuntz, Gordon F.; and Bearden, Roby, to Exxon Research and Engineering Co. Process for reducing coke formation in heavy feed catalytic cracking. 4,372,841, Cl. 208-113.000.
Stuntz, Gordon F.: *See—*
Bearden, Roby; and Stuntz, Gordon F., 4,372,840, Cl. 208-113.000.
Sturgeon, Philip L.: *See—*
Clyne, Nicholas; Sturgeon, Philip L.; and Wright, Lawrence H., 4,373,133, Cl. 235-383.000.
Sturmer, Walter: *See—*
von der Decken, Claus-Benedict; Hantke, Hans-Jurgen; and Sturmer, Walter, 4,372,912, Cl. 376-381.000.
Suda, Hitoshi: *See—*
Fujii, Takayuki; and Suda, Hitoshi, 4,372,412, Cl. 180-90.000.
Sugalski, Raymond K.; Leduc, Kenneth C.; and Morris, Jesse L., to General Electric Company. Apparatus for assembling and welding vented cell covers. 4,373,129, Cl. 219-79.000.
Sugimoto, Yoshikazu; Shirosaki, Kiyotaka; Kawaguchi, Masashi; and Takeshima, Masaki, to Hitachi, Ltd.; and Hitachi Kyowa Kogyo, Ltd. Method of removing minuscule solid particles from liquid and system therefor. 4,372,859, Cl. 210-739.000.
Sugimura, Mitsuo: *See—*
Tarumi, Niro; Sugimura, Mitsuo; Komiya, Shigeo; and Tsuchiya, Makoto, 4,373,076, Cl. 526-261.000.
Sugiura, Hiroaki: *See—*
Yoshino, Yataro; Ota, Akiho; and Sugiura, Hiroaki, 4,372,909, Cl. 264-521.000.
Sugiyama, Takeshi; Shirouchi, Shoji; Tsuchiya, Osamu; Onoda, Mamoru; Yamashita, Atsuko; Fujita, Isao; and Imanishi, Nobuyuki, to Kobe Steel, Ltd. Iron ore pellets containing coarse ore particles. 4,372,779, Cl. 75-0.50R.
Suleiman, Elisabeth: *See—*
Stern, Harold; and Suleiman, Elisabeth, 4,372,322, Cl. 128-491.000.
Sulzer, Gerd: *See—*
Wiener, Dieter; Sulzer, Gerd; Skyba, Rudolf, deceased; and Pomp, Jurgen, 4,372,085, Cl. 51-216.0ND.
Sumeghy, Zoltan: *See—*
Takacs, Kalman; Papp, Maria H.; Kovacs, Gabor; Ajzert, Ilona K.; Simay, Antal; Nagy, Peter L.; Puskas, Marian E.; Sebestyen, Gyula; Stadler, Istvan; and Sumeghy, Zoltan, 4,373,104, Cl. 546-145.000.
Sumitomo Naugatuck Co. Ltd.: *See—*
Sakano, Hajime; Nakai, Fumio; and Tomari, Yukio, 4,373,063, Cl. 525-64.000.
Summers, Ann. Educational game for student and/or graduate nurses. 4,372,559, Cl. 273-243.000.
Sumner, Richard B.: *See—*
Sanderson, William G.; Sumner, Richard B.; and Kragh, Loren G., 4,372,897, Cl. 261-153.000.
Sunaga, Yoshimitsu; and Honda, Satoru, to Pioneer Electronic Corporation. Playback mode switching circuit for tape recorder. 4,373,170, Cl. 360-71.000.
Sunds Defibrator AB: *See—*
Bystedt, Hjalmar S. I., 4,372,810, Cl. 162-23.000.
Superfos Glasuld A/S (Superfos A/S): *See—*
Rasmussen, Lauritz B. L., 4,372,799, Cl. 156-285.000.
Supik, Helmuth, to Continental Group, Inc., The. Annealing of end rim. 4,372,719, Cl. 413-9.000.
Surgant, John M.: *See—*
LeClair, Francis J.; and Surgant, John M., 4,372,777, Cl. 71-93.000.
Surgikos, Inc.: *See—*
Brasfield, Bernard M., 4,371,987, Cl. 2-162.000.
Surovikin, Vitaly F.; Rogov, Alexandr R.; Sazhin, Gennady V.; and Gorjunov, Georgy L. Process for producing carbon black. 4,372,936, Cl. 423-450.000.

Sutterlin, Norbert: *See—*
Besecke, Siegmund; Fink, Herbert; Sutterlin, Norbert; Markert, Gerhard; Schroder, Gunter; and Tilch, Willi, 4,373,056, Cl. 524-547.000.

Suzuki, Keiichi, to Kabushiki Kaisha Daini Seikosha. Method of making a switching electrode portion of a PCB. 4,372,046, Cl. 29-852.000.

Suzuki, Noboru: *See—*
Kunimoto, Go; Ichinose, Isao; Suzuki, Noboru; and Mori, Fumio, 4,372,457, Cl. 215-228.000.

Suzuki, Sho: *See—*
Sato, Toshio; Suzuki, Sho; and Ohmura, Hidemasa, 4,373,053, Cl. 524-457.000.
Yagi, Kazuhisa; Suzuki, Sho; and Nakashima, Norihiko, 4,373,043, Cl. 524-130.000.

Suzuki, Yoshiharu; and Kai, Tomokazu, to Nippon Electric Co., Inc. Transmitter control system. 4,373,206, Cl. 455-103.000.

Svensson, Kent A.: *See—*
Bernhardsson, Ake A.; and Svensson, Kent A., 4,372,276, Cl. 123-525.000.

Svoboda, Josef; and Edinger, Franz K., to TMC Corporation. Safety ski binding. 4,372,574, Cl. 280-634.000.

Swalwell, John E.: *See—*
Gibson, David V.; McKay, Garry M.; and Swalwell, John E., 4,373,054, Cl. 524-460.000.

Swanson-Erie Corporation: *See—*
Notarione, Patrick D.; Turk, Ronald K.; and Grafius, Gerald, 4,372,463, Cl. 221-10.000.

Syberg, Jan, to Boeing Company, The. Supersonic inlet having variable area sideplate openings. 4,372,505, Cl. 244-53.00B.

Symes, Kenneth C.: *See—*
Lawson, Christopher J.; and Symes, Kenneth C., 4,372,785, Cl. 106-170.000.

Szatmari, Jozsef: *See—*
Gombocz, Karoly; Korbuly, Jozsef; Krampe, Geza; Szatmari, Jozsef; and Szoke, Karoly, 4,372,172, Cl. 73-862.390.

Szereday, Pal, to Novex Foreign Trade Co. Ltd. for Development and Commercialization of Inventions. Device for removing floating liquid impurities, oil, from a flowing water surface. 4,372,854, Cl. 210-242.300.

Szoke, Karoly: *See—*
Gombocz, Karoly; Korbuly, Jozsef; Krampe, Geza; Szatmari, Jozsef; and Szoke, Karoly, 4,372,172, Cl. 73-862.390.

Szostak, Jan, to Singer Company, The. Tapered screw fastening means for bushings, sleeves and bearings. 4,372,703, Cl. 403-324.000.

Szydlowski, Donald F.: *See—*
Sederquist, Richard A.; Szydlowski, Donald F.; and Sawyer, Richard D., 4,372,759, Cl. 55-73.000.

Taff, James T., to Dimetrics, Inc. Full function in-place weld head. 4,372,474, Cl. 228-29.000.

Tahara, Susumu; Nishihira, Keigo; Miyatake, Takashi; Sawada, Hiroyuki; and Kita, Junichiro, to Ube Industries, Ltd. Process for preparing N-alkyl-alkylene-diamines. 4,373,107, Cl. 564-473.000.

Tai, King L.: *See—*
Reichmanis, Elsa; Roman, Bernard J.; Tai, King L.; and Wilkins, Cletus W., Jr., 4,373,018, Cl. 430-312.000.

Takacs, Kalman; Papp, Maria H.; Kovacs, Gabor; Ajzert, Ilona K.; Simay, Antal; Nagy, Peter L.; Puskas, Marian E.; Sebestyen, Gyula; Stadler, Istvan; and Sumeghy, Zoltan, to Chinoin Gyogyszer es Vegyeszeti Termekek Gyara. Sulfur-containing isoquinoline derivatives, process for the preparation thereof and pharmaceutical compositions containing them. 4,373,104, Cl. 546-145.000.

Takahashi, Katsuhiro: *See—*
Arai, Tadashi; Takahashi, Katsuhiro; Ishiguro, Kimiko; and Yokoyama, Koji, 4,372,947, Cl. 424-121.000.

Takahashi, Kenichi: *See—*
Harigane, Kotaro; Takahashi, Kenichi; Shudo, Hirokazu; and Tando, Shuichi, 4,372,802, Cl. 156-538.000.

Takahashi, Masaaki; and Hamamura, Hideki. Method for regenerating an etch solution for aluminum and the alloys thereof. 4,372,805, Cl. 156-642.000.

Takano, Suwaji: *See—*
Tsuchiya, Toshio; Enokimoto, Akito; Mizushima, Sadao; and Takano, Suwaji, 4,372,602, Cl. 296-78.00R.

Takase, Sadao, to Nissan Motor Company, Limited. Digital control system for internal combustion engine. 4,372,274, Cl. 123-491.000.

Takashima, Koichi: *See—*
Yamagami, Seiji; Nonaka, Hirohiko; Shimonaru, Tuneyoshi; Takashima, Koichi; and Kato, Yasuhiko, 4,372,846, Cl. 210-86.000.

Takasugi, Hisashi: *See—*
Takaya, Takao; Takasugi, Hisashi; Chiba, Toshiyuki; and Tsuji, Kiyoshi, 4,372,952, Cl. 424-246.000.

Takaya, Takao; Takasugi, Hisashi; Chiba, Toshiyuki; and Tsuji, Kiyoshi, to Fujisawa Pharmaceutical Co., Ltd. Cephem compounds. 4,372,952, Cl. 424-246.000.

Takeda Chemical Industries, Ltd.: *See—*
Higashide, Eiji; Tanida, Seiichi; Muroi, Masayuki; and Asai, Mitsuko, 4,373,028, Cl. 435-253.000.
Kitamori, Nobuyuki; Hemmi, Keizi; and Maeno, Masaya, 4,372,968, Cl. 424-280.000.

Takemura, Yasuhiko; Okazaki, Takahisa; and Imai, Akira, to Tokyo Shibaura Denki Kabushiki Kaisha. Ultrasonic diagnosing apparatus. 4,372,323, Cl. 128-660.000.

Takenaka, Toichi: *See—*
Imai, Kazuo; Niigata, Kunihiro; Fujikura, Takashi; Hashimoto, Shinichi; and Takenaka, Toichi, 4,373,106, Cl. 564-85.000.

Takeshima, Masaki: *See—*
Sugimoto, Yoshikazu; Shirosaki, Kiyotaka; Kawaguchi, Masashi; and Takeshima, Masaki, 4,372,859, Cl. 210-739.000.

Takeuchi, Tomio: *See—*
Oki, Toshikazu; Matsuzawa, Yasue; Ishikura, Tomoyuki; Takeuchi, Tomio; and Umezawa, Hamao, 4,373,094, Cl. 536-6.400.

Takizawa, Junichi; Kojima, Seiichiro; Satoh, Nobuo; and Nakazato, Eiji, to Fuji Jukogyo Kabushiki Kaisha. Passive safety belt device. 4,372,578, Cl. 280-802.000.

Talres Development (N.A.) N.V.: *See—*
Lawson, Christopher J.; and Symes, Kenneth C., 4,372,785, Cl. 106-170.000.

Tamura, Shoichi; Asami, Takayoshi; and Sonoi, Hidekazu, to Kabushiki Kaisha Kobe Seiko Sho. Air liquefaction and separation process and equipment. 4,372,765, Cl. 62-29.000.

Tanaka, Miki: *See—*
Isogai, Hideaki; and Tanaka, Miki, 4,373,196, Cl. 365-189.000.

Tando, Shuichi: *See—*
Harigane, Kotaro; Takahashi, Kenichi; Shudo, Hirokazu; and Tando, Shuichi, 4,372,802, Cl. 156-538.000.

Tani, Yoshiki: *See—*
Yamada, Hideaki; Tani, Yoshiki; and Isobe, Kimiyasu, 4,373,026, Cl. 435-191.000.

Tanida, Seiichi: *See—*
Higashide, Eiji; Tanida, Seiichi; Muroi, Masayuki; and Asai, Mitsuko, 4,373,028, Cl. 435-253.000.

Tapco Products Company, Inc.: *See—*
Rhoades, James J., 4,372,142, Cl. 72-319.000.

Taplin, Lael B.: *See—*
Walter, Richard P.; and Taplin, Lael B., 4,372,272, Cl. 123-467.000.

Taragos, Peter. Upholstery cleaning pad and method of making the same. 4,372,867, Cl. 252-91.000.

Tarumi, Niro; Sugimura, Mitsuo; Komiya, Shigeo; and Tsuchiya, Makoto, to Hoya Lens Corporation. Terpolymer with a high refractive index. 4,373,076, Cl. 526-261.000.

Tasch, Al F., Jr., to Texas Instruments Incorporated. Very high density punch-through read-only-memory. 4,373,165, Cl. 357-13.000.

Taylor, David A.: *See—*
Dey, Philip; Gaylard, Bernard; and Taylor, David A., 4,372,792, Cl. 156-48.000.

TEC, Inc.: *See—*
Wyslotsky, Thor, 4,372,097, Cl. 53-405.000.

Tecl, Bohuslav: *See—*
Knoke, Jurgen; Jost, Manfred; Fahrbach, Erich; and Tecl, Bohuslav, 4,373,000, Cl. 428-198.000.

Tecnol, Inc.: *See—*
Hubbard, Vance M.; and Brunson, Welton K., 4,372,301, Cl. 128-94.000.

Teeple, Michael: *See—*
Stroup, John F.; Robins, Harold J.; and Teeple, Michael, 4,372,910, Cl. 264-532.000.

Teletype Corporation: *See—*
Herbst, Wayne R., 4,373,114, Cl. 178-17.00D.
Huntoon, Francis E., 4,372,519, Cl. 248-466.000.

Tennyson, Bill E.: *See—*
Fette, Bruce A.; Harte, Bruce D.; and Tennyson, Bill E., 4,373,191, Cl. 364-724.000.

Terry, Clegia L. Tapered tooth helical gear drive train for eliminating the need for end thrust bearings. 4,372,176, Cl. 74-409.000.

Terry, F. Duncan: *See—*
Haag, George A.; Fogg, O. Douglas; Greenley, Gordon A.; Sheppard, Steve A.; and Terry, F. Duncan, 4,373,193, Cl. 364-900.000.

Tetra Pak Developpement SA: *See—*
Petersen-Hoj, Peter, 4,373,002, Cl. 428-213.000.

Tetra Pak International AB: *See—*
Dilot, Rolf M.; and Hakansson, Jan T., 4,372,797, Cl. 156-249.000.

Tetra Werke Dr. rer. nat. Ulrich Baensch Gesellschaft mit beschrankter Haftung: *See—*
Ritter, Gunter, 4,372,858, Cl. 210-674.000.

Texaco Inc.: *See—*
Nieh, Edward C. Y., 4,372,873, Cl. 252-389.00R.
Rooney, John F.; and Pindell, Robert G., 4,372,382, Cl. 166-264.000.
Speranza, George P.; Cuscurida, Michael; and Zimmerman, Robert L., 4,373,034, Cl. 521-177.000.
Virk, Kashmir S.; and Alperstein, Martin, 4,372,111, Cl. 60-274.000.

Texas Instruments Incorporated: *See—*
Lam, Hon W., 4,372,990, Cl. 427-53.100.
Tasch, Al F., Jr., 4,373,165, Cl. 357-13.000.
Tsaur, Shyh-Chang; and Kuo, Chang-Kiang, 4,372,031, Cl. 29-571.000.
White, Arlton H., 4,372,420, Cl. 181-120.000.

Textilma AG: *See—*
Muller, Jakob, 4,372,133, Cl. 66-120.000.

Tezucar, Okan K.: *See—*
Holz, George E.; and Tezucar, Okan K., 4,373,157, Cl. 340-805.000.

Thakrar, Anil C.: *See—*
Schubert, Paul C.; and Thakrar, Anil C., 4,373,048, Cl. 524-371.000.

Theobald, Alan, to Air Products and Chemicals, Inc. Method of producing gaseous oxygen and a cryogenic plant in which said method can be performed. 4,372,764, Cl. 62-13.000.

Thermo King Corporation: *See—*
Waldschmidt, John E., 4,372,635, Cl. 339-45.00M.

Thettu, Raghulinga R.: *See—*
Malachowski, Michael A.; Shur, Victor; and Thettu, Raghulinga R., 4,372,668, Cl. 355-3.00R.

Theurer, Josef, to Franz Plasser Bahnbaumaschinen Industriellgesellschaft m.b.H. Method and mobile machine for removing surface irregularities from a rail head of a railroad track. 4,372,714, Cl. 409-293.000.

Thirmulachar, Mandayam J.: *See—*
Narasimhan, Mandayam J., Jr.; and Thirmulachar, Mandayam J., 4,372,753, Cl. 44-52.000.

Thomae, Irving H., to Dartmouth College, Trustees of. Electronic device to record temperatures and the time of occurrence. 4,372,692, Cl. 374-104.000.

Thomamueller, Dieter: *See—*
Brunsch, Klaus; Herkert, Claus-Michael; and Thomamueller, Dieter, 4,372,795, Cl. 156-155.000.

Thomas & Betts Corporation: *See—*
Basile, Rocco F.; Blum, Kenneth P.; and Cole, John M., 4,372,048, Cl. 30-124.000.

Thompson, Howard. Lipstick applicator device. 4,372,331, Cl. 132-88.700.

Thompson, Kenneth P., to Champion International Corporation. Method and apparatus for forming a plastic fluid container with an integral handle. 4,372,737, Cl. 425-393.000.

Thompson, Larry F.: *See—*
Barns, Robert L.; Chandross, Edwin A.; Flamm, Daniel L.; Manzione, Louis T.; and Thompson, Larry F., 4,372,834, Cl. 204-157.10R.

Thompson, Mortimer S. Blow molded container with handle. 4,372,454, Cl. 215-100.00A.

Thomsen, Svend E.: *See—*
Petersen, Hans C.; Kyster, Erik; Thomsen, Svend E.; and Flagstad, Carl O., 4,372,413, Cl. 180-152.000.

Thomson-Brandt: *See—*
Crepin, Roger, 4,372,215, Cl. 102-387.000.

Thornburg, Robert O.: *See—*
Hagelberg, Allen C.; Allardt, Clark E.; Lobitz, Walter A.; Thornburg, Robert O.; Zimmerman, George F.; Letterman, Gary L.; and Helbron, John W., 4,372,239, Cl. 114-20.00A.

Thorp, Neil: *See—*
Dyett, Derek H.; and Thorp, Neil, 4,372,327, Cl. 131-95.000.

Tice, Larry E., to Colt Industries Operating Corp. Screw and floating drive nut assembly. 4,372,222, Cl. 108-137.000.

TII Industries Inc.: *See—*
McDonald, Gerald F., 4,373,120, Cl. 179-175.000.

Tilch, Willi: *See—*
Besecke, Siegmund; Fink, Herbert; Sutterlin, Norbert; Markert, Gerhard; Schroder, Gunter; and Tilch, Willi, 4,373,056, Cl. 524-547.000.

Till, Henry R.: *See—*
Fantuzzo, Joseph; and Till, Henry R., 4,372,669, Cl. 355-3.00R.

Tinning, Robert C. Building construction. 4,372,733, Cl. 425-60.000.

Tinsley, James M., to N-S-W Corporation. Compact power wrenching machine. 4,372,181, Cl. 81-57.390.

Tison, Eric; and Herve, Paul, to Codimag; and Ets. Destouche. Device for controlling the movement of a web through a printing machine. 4,372,206, Cl. 101-228.000.

Tissot, Alain; and Bourlier, Claude. Panel structure for public enclosures. 4,372,225, Cl. 109-19.000.

Tittmann, Bernhard R.; Ahlberg, Lloyd A.; and Elsley, Richard K., to Rockwell International Corporation. Acoustic measurement of near surface property gradients. 4,372,163, Cl. 73-602.000.

TMC Corporation: *See—*
Svoboda, Josef; and Edinger, Franz K., 4,372,574, Cl. 280-634.000.

Toda, Nobuhiro; and Yamada, Masahiko, to NGK Spark Plug Co., Ltd. Method of manufacturing oxygen sensor. 4,372,824, Cl. 204-25.000.

Todter, Folkhard: *See—*
Kausch, Erwin; and Todter, Folkhard, 4,372,328, Cl. 131-332.000.

Toelke, Lester W., to International Tool & Supply Co., Inc. Industrial pipe thread cleaner. 4,372,003, Cl. 15-88.000.

Toeppen, Thurston H.: *See—*
Ritchie, Leon T.; Snyder, Clair W., Jr.; Toeppen, Thurston H.; and Woratyla, John A., 4,372,634, Cl. 339-17.00C.

Toffolon, Roger L.: *See—*
Brown, William L.; and Toffolon, Roger L., 4,372,091, Cl. 52-593.000.

Tokumitsu, Naoki: *See—*
Asai, Yoshihiko; Hori, Masao; and Tokumitsu, Naoki, 4,373,128, Cl. 219-73.110.

Tokyo Denki Kagaku Kogyo Kabushiki Kaisha: *See—*
Harigane, Kotaro; Takahashi, Kenichi; Shudo, Hirokazu; and Tando, Shuichi, 4,372,802, Cl. 156-538.000.

Tokyo Shibaura Denki Kabushiki Kaisha: *See—*
Matsuo, Katsuharu, 4,372,134, Cl. 68-12.00R.
Takemura, Yasuhiko; Okazaki, Takahisa; and Imai, Akira, 4,372,323, Cl. 128-660.000.
Yamada, Tetsuo, 4,373,167, Cl. 357-24.000.

Tolman, Radon; and Stephens, Frank M., Jr., to Enrecon, Inc. Production of a fuel gas with a stabilized metal carbide catalyst. 4,372,755, Cl. 48-197.00R.

Tomari, Yukio: *See—*
Sakano, Hajime; Nakai, Fumio; and Tomari, Yukio, 4,373,063, Cl. 525-64.000.

Tomioka, Soichiro; and Komiya, Yasuo, to Kabushiki Kaisha Saginomiya Seisakusho. Reversible expansion valve. 4,372,486, Cl. 236-92.00B.

Tomosada, Masahiro; Kimura, Yoshimasa; and Sakamaki, Hisashi, to Canon Kabushiki Kaisha. Image forming apparatus. 4,372,673, Cl. 355-14.00R.

Tomy Corporation: *See—*
Spring, Gorden W., 4,372,078, Cl. 46-150.000.

Tool Dynamics, Inc.: *See—*
Fink, Raymond W., 4,372,449, Cl. 211-86.000.

Toriyama, Kazuhisa; Nakagomi, Tamihito; Sato, Hisato; Fujita, Yutaka; Morita, Katsuhiko; and Arai, Yoshi, to Dainippon Ink and Chemicals, Inc.; and Hitachi Ltd. Nematic liquid crystals for display devices. 4,372,871, Cl. 252-299.610.

Tornberg, Claes: *See—*
Aslund, Christer; Eriksson, Hans; and Tornberg, Claes, 4,373,012, Cl. 428-558.000.

Toth-Sarudy, Eva: *See—*
Ambrus, Gabor; Toth-Sarudy, Eva; Cseh, Gyorgy; Barta, Istvan; and Horvath, Gyula, 4,372,973, Cl. 424-305.000.

Totino, Peter J.; and Davidson, Donald R., to Singer Company, The. Two dimensional feed for monogram sewing machine. 4,372,237, Cl. 112-308.000.

Totino, Peter J.: *See—*
Killinger, Karl H.; Johnson, Kenneth M.; and Totino, Peter J., 4,372,234, Cl. 112-258.000.

Toton, Edward T.; and Zimet, Elihu, to United States of America, Navy. Explosive auto-enhancement device. 4,372,214, Cl. 102-305.000.

Tower Systems Inc.: *See—*
Sanderson, William G.; Sumner, Richard B.; and Kragh, Loren G., 4,372,897, Cl. 261-153.000.

Toyama Chemical Co., Ltd.: *See—*
Kodama, Yutaka; Oyama, Kaoru; Shimizu, Ryusaku; Nakabayashi, Masao; Nakashima, Yoshifumi; Sano, Takashi; Shibata, Masaaki; and Goden, Kiyoshi, 4,372,949, Cl. 424-199.000.

Toyo Seikan Kaisha, Ltd.: *See—*
Kunimoto, Go; Ichinose, Isao; Suzuki, Noboru; and Mori, Fumio, 4,372,457, Cl. 215-228.000.

Toyoda, Hideaki, to Komori Printing Machinery Co., Ltd. Ink fountain devices for use in printing press. 4,372,207, Cl. 101-365.000.

Toyoda, Kazuhiro; Ono, Chikai; and Hayashi, Toshio, to Fujitsu Limited. Semiconductor integrated circuit device. 4,373,195, Cl. 365-154.000.

Toyoda, Ryuichi: *See—*
Kuramochi, Hiroshi; and Toyoda, Ryuichi, 4,372,740, Cl. 425-544.000.

Toyota Jidosha Kogyo Kabushiki Kaisha: *See—*
Inukai, Mitsuo, 4,372,501, Cl. 242-107.000.
Motonami, Masanao; Ogawa, Hisashi; and Imai, Yoshikazu, 4,372,580, Cl. 280-802.000.

Trafcon, Inc.: *See—*
Morse, Randall L., 4,372,536, Cl. 256-64.000.

Trageser, Ann S. Garden edging structure. 4,372,079, Cl. 47-33.000.

Transportation Security Inc.: *See—*
Mickelson, Thorwald J., 4,372,136, Cl. 70-14.000.

Trevino, Joe, Jr., to Reed Rock Bit Company. Combination fluid nozzle and backflow valve. 4,372,402, Cl. 175-318.000.

Trevoy, Lloyd W.: *See—*
Cymbalisty, Lubomyr M.; Maskwa, Alvin J.; Trevoy, Lloyd W.; and Wojno, Jan, 4,372,174, Cl. 73-863.110.

Tringali, Robert D., to Eisenberg, Joel H. Ski boot. 4,372,062, Cl. 36-120.000.

Trinkwalder, Joseph C., Jr., to Sherwood Selpac Corp. Pressure-retaining valve and method of retaining pressure. 4,372,343, Cl. 137-614.200.

Trio Kabushiki Kaisha: *See—*
Kaneda, Ryoichi, 4,373,209, Cl. 455-208.000.

Triplett, Baylor B.; Ferrando, Carlo; and Galli, Guido, to Intel Magnetics, Inc. Process for removing a liquid phase epitaxial layer from a wafer. 4,372,808, Cl. 156-655.000.

Tritt, William R. Rudder assembly. 4,372,241, Cl. 114-162.000.

Trucco, Horacio A. Internal combustion engine for diverse fuels. 4,372,264, Cl. 123-255.000.

Tsaur, Shyh-Chang; and Kuo, Chang-Kiang, to Texas Instruments Incorporated. Method of making high density memory cells with improved metal-to-silicon contacts. 4,372,031, Cl. 29-571.000.

Tsuchiya, Makoto: *See—*
Tarumi, Niro; Sugimura, Mitsuo; Komiya, Shigeo; and Tsuchiya, Makoto, 4,373,076, Cl. 526-261.000.

Tsuchiya, Osamu: *See—*
Sugiyama, Takeshi; Shirouchi, Shoji; Tsuchiya, Osamu; Onoda, Mamoru; Yamashita, Atsuko; Fujita, Isao; and Imanishi, Nobuyuki, 4,372,779, Cl. 75-0.50R.

Tsuchiya, Toshio; Enokimoto, Akito; Mizushima, Sadao; and Takano, Suwaji, to Honda Giken Kogyo Kabushiki Kaisha. Small-sized vehicle. 4,372,602, Cl. 296-78.00R.

Tsuji, Kiyoshi: *See—*
Takaya, Takao; Takasugi, Hisashi; Chiba, Toshiyuki; and Tsuji, Kiyoshi, 4,372,952, Cl. 424-246.000.

Tsuji, Tomohiro: *See—*
Komoto, Akira; and Tsuji, Tomohiro, 4,372,406, Cl. 177-212.000.

Tsunoda, Masakazu: *See—*
Shimizu, Michiro; and Tsunoda, Masakazu, 4,373,116, Cl. 179-1.0SM.

Tuftco Corporation: *See—*
Maier, H. Armin, 4,372,001, Cl. 8-151.000.

Turk, Ronald K.: *See—*
Notarione, Patrick D.; Turk, Ronald K.; and Grafius, Gerald, 4,372,463, Cl. 221-10.000.

Turner, Norris G.: *See—*
Mills, David A.; and Turner, Norris G., 4,373,185, Cl. 364-478.000.

Turner, Peter R.: *See—*
  Dowding, John G.; Turner, Peter R.; and Hudson, Robert J., 4,373,188, Cl. 364-552.000.
Twin Disc, Incorporated: *See—*
  Aschauer, George R., 4,372,434, Cl. 192-85.0AA.
Tyco Industries, Inc.: *See—*
  Harkins, Samuel J., 4,372,075, Cl. 46-1.00K.
Tyler, Michael N.: *See—*
  Hoelzen, Warren R.; Prescott, John F.; and Tyler, Michael N., 4,372,212, Cl. 102-264.000.
UBE Industries Ltd.: *See—*
  Kaneda, Takaho; Ishikawa, Seiji; Daimon, Hiroshi; Katsura, Toshio; Hondo, Tadahiro; and Ueda, Masahiro, 4,373,087, Cl. 528-337.000.
  Tahara, Susumu; Nishihira, Keigo; Miyatake, Takashi; Sawada, Hiroyuki; and Kita, Junichiro, 4,373,107, Cl. 564-473.000.
Uchida, Keiichi: *See—*
  Oda, Yoshio; Otouma, Hiroshi; Uchida, Keiichi; Morikawa, Shinsuke; and Ikemura, Masaaki, 4,372,938, Cl. 423-469.000.
Uchida, Minoru; Nishi, Takao; and Nakagawa, Kazuyuki, to Otsuka Pharmaceutical Company, Limited. Tetrazole derivatives; and anti-ulcer composition containing the same. 4,372,953, Cl. 424-248.500.
Uebelhart, Walter; Gilomen, Beat; and Parel, Claude, to A. Michael S.A. Rotary yarn guide for textile machines. 4,372,108, Cl. 57-358.000.
Ueda, Masahiro: *See—*
  Kaneda, Takaho; Ishikawa, Seiji; Daimon, Hiroshi; Katsura, Toshio; Hondo, Tadahiro; and Ueda, Masahiro, 4,373,087, Cl. 528-337.000.
Uekita, Masakazu: *See—*
  Oizumi, Masayuki; Uekita, Masakazu; Goto, Masana; Azumi, Ichiro; Uozumi, Shoji; Abe, Masaharu; Fushiki, Yasuo; Isshiki, Minoru; and Kawasaki, Kunio, 4,372,800, Cl. 156-307.300.
Ueno, Susumu: *See—*
  Imada, Kiyoshi; Ueno, Susumu; Nishina, Yasuhide; and Nomura, Hirokazu, 4,372,986, Cl. 427-40.000.
Uhlig, Curtis A. Insole, apparatus for molding and method of making shoes. 4,372,525, Cl. 249-102.000.
Uhrhane, Francis J.: *See—*
  Sartori, Eugene F.; and Uhrhane, Francis J., 4,373,121, Cl. 179-175.30F.
Ulrich, Reinhard, to Max-Planck-Gesellschaft zur Forderung der Wissenschaften e.V. Method and arrangement for the measurement of rotations. 4,372,685, Cl. 356-350.000.
Umemoto, Shinzi: *See—*
  Hanabusa, Takayoshi; Yamamoto, Kenji; Umemoto, Shinzi; Kurosawa, Keiji; and Yamashita, Mitsuo, 4,372,804, Cl. 156-631.000.
Umezawa, Hamao: *See—*
  Oki, Toshikazu; Matsuzawa, Yasue; Ishikura, Tomoyuki; Takeuchi, Tomio; and Umezawa, Hamao, 4,373,094, Cl. 536-6.400.
Unger, Hans-Georg, to Licentia Patent-Verwaltungs-GmbH. Strip diode laser with reactance free fiber output. 4,372,644, Cl. 350-96.200.
Unger, Klaus: *See—*
  Wunder, Friedrich; Leupold, Ernst I.; Hachenberg, Horst; Schmidt, Hans-Joachim; and Unger, Klaus, 4,372,878, Cl. 252-455.00Z.
Uni-Flange Corporation: *See—*
  Roche, Charles W., 4,372,587, Cl. 285-238.000.
Union Carbide Corporation: *See—*
  Bobst, Robert W.; Garner, Billy J.; and Jacob, Frederick W., 4,372,758, Cl. 55-48.000.
  Matthews, William G.; Sicard, Jean-Paul; and Anderson, Richard A., 4,372,857, Cl. 210-673.000.
  Potts, James E., 4,372,311, Cl. 128-287.000.
Union Oil Company of California: *See—*
  Backlund, Peter S., 4,372,872, Cl. 252-313.00R.
  Hass, Robert H., 4,372,932, Cl. 423-351.000.
Union Special G.m.b.H.: *See—*
  Ciecior, Heinrich K., 4,372,230, Cl. 112-139.000.
  Pearey, John T., 4,372,618, Cl. 299-31.000.
United Kingdom Atomic Energy Authority: *See—*
  Denton, Ivor E.; and Henney, John W., 4,372,902, Cl. 264-65.000.
United States Filter Corporation: *See—*
  Reinauer, Thomas V., 4,372,821, Cl. 202-263.000.
United States Gypsum Company: *See—*
  Johnstone, Norman E.; and Kehoe, John R., 4,372,814, Cl. 162-124.000.
U.S. Manufacturing Co.: *See—*
  Lerman, Max, 4,372,298, Cl. 128-80.00C.
United States of America
  Army: *See—*
    Dante, James G., 4,372,211, Cl. 102-207.000.
    Kirkendall, Richard D.; Drysdale, William H.; Kokinakis, Louise D.; and Burns, Bruce P., 4,372,217, Cl. 102-521.000.
    Lienau, Jeffrey A., 4,372,192, Cl. 89-1.800.
  Energy: *See—*
    Mayfield, Glenn L., 4,372,853, Cl. 210-232.000.
    Nelson, Paul A.; and Horowitz, Jeffrey S., 4,372,376, Cl. 165-104.120.
  Health & Human Services: *See—*
    Hjelmeland, Leonard M., 4,372,888, Cl. 260-397.100.
  National Aeronautics and Space Administration; administrator; with respect to an invention of:
    Cheng, Dah Y. Noise suppressor for turbo fan jet engines. 4,372,110, Cl. 60-262.000.
  National Aeronautics and Space Administration: *See—*
    Adams, Richard R.; MacConochie, Ian O.; and Poole, Bordie D., Jr., 4,372,680, Cl. 356-51.000.
    Doggett, Robert V., Jr.; and Ricketts, Rodney H., 4,372,158, Cl. 73-147.000.
    Doggett, Robert V., Jr.; and Ricketts, Rodney H., 4,372,159, Cl. 73-147.000.
    Morris, James F., 4,372,377, Cl. 165-104.260.
    Morris, James F., 4,373,142, Cl. 310-306.000.
    Mueller, William A.; Ingham, John D.; and Reilly, William W., 4,373,039, Cl. 523-205.000.
    Schomburg, Calvin; and Dotts, Robert L., 4,373,003, Cl. 428-241.000.
  Navy: *See—*
    Collins, David A.; and Lile, Derek L., 4,372,032, Cl. 29-571.000.
    Frisch, Georg D.; and Ward, William, Jr., 4,372,508, Cl. 244-122.0AG.
    Gigante, Joseph R., 4,372,803, Cl. 156-626.000.
    Gutz, Kenneth H., 4,373,148, Cl. 318-254.000.
    Hanson, Paul A.; Hightower, John D.; and Strickland, Alvah T., 4,372,359, Cl. 114-244.000.
    Hoelzen, Warren R.; Prescott, John F.; and Tyler, Michael N., 4,372,212, Cl. 102-264.000.
    Lewis, Bernard L.; and Kretschmer, Frank F., 4,373,190, Cl. 364-715.000.
    Lindberg, Jan F., 4,373,143, Cl. 310-334.000.
    Rozner, Alexander G.; and Helms, Horace H., 4,372,213, Cl. 102-301.000.
    Singer, Arnold H.; and Holm, Ronald T., 4,372,642, Cl. 350-96.120.
    Toton, Edward T.; and Zimet, Elihu, 4,372,214, Cl. 102-305.000.
U.S. Peroxygen Company: *See—*
  Peterson, David, 4,372,877, Cl. 260-453.0RZ.
U.S. Philips Corporation: *See—*
  Gustin, Pol A. G. J.; and Schayes, Raymond G. G., 4,372,045, Cl. 29-846.000.
  Krainhofer, Gunter, 4,372,509, Cl. 248-27.100.
United Technologies Corporation: *See—*
  Galasso, Francis S.; and Veltri, Richard D., 4,373,006, Cl. 428-368.000.
  Landsman, Douglas A.; and Luczak, Francis J., 4,373,014, Cl. 429-13.000.
  Sederquist, Richard A.; Szydlowski, Donald F.; and Sawyer, Richard D., 4,372,759, Cl. 55-73.000.
Universal Data Systems, Inc.: *See—*
  Pierce, O. Leon, 4,373,117, Cl. 179-2.0DP.
University of Georgia Research Foundation, Inc.: *See—*
  King, Allen D., Jr.; King, Robert B.; and Sailers, Earl L., III, 4,372,833, Cl. 204-157.10R.
University of Pittsburgh: *See—*
  Gilbertson, John R.; and Crout, Richard J., 4,372,978, Cl. 424-343.000.
UOP Inc.: *See—*
  Kulprathipanja, Santi; and Neuzil, Richard W., 4,372,876, Cl. 252-430.000.
  Neuzil, Richard W.; and Priegnitz, James W., 4,373,025, Cl. 435-94.000.
  Olson, Larry D., 4,372,347, Cl. 139-420.00C.
Uozumi, Shoji: *See—*
  Oizumi, Masayuki; Uekita, Masakazu; Goto, Masana; Azumi, Ichiro; Uozumi, Shoji; Abe, Masaharu; Fushiki, Yasuo; Isshiki, Minoru; and Kawasaki, Kunio, 4,372,800, Cl. 156-307.300.
Upadek, Horst; and Bruns, Klaus, to Henkel Kommanditgesellschaft auf Aktien. Use of substituted 2-(1-methylbutyl)-1,3-dioxanes as perfuming agents. 4,372,880, Cl. 252-522.00R.
USM Corporation: *See—*
  Gooch, Kendrick J.; Scharer, Hans R.; and Winter, William, 4,372,736, Cl. 425-149.000.
Usui, Mitsuko: *See—*
  Matuhashi, Tyoku; Usui, Mitsuko; Yamamoto, Akio; Mitsuhashi, Masakazu; and Koyama, Shunsaku, 4,372,883, Cl. 260-112.00R.
Utsunomiya, Yoichi: *See—*
  Miyata, Shin; Kono, Tateomi; Shibazaki, Kenji; and Utsunomiya, Yoichi, 4,372,676, Cl. 355-14.00C.
Vale, Wylie W., Jr.: *See—*
  Brown, Marvin R.; Rivier, Jean E. F.; and Vale, Wylie W., Jr., 4,372,884, Cl. 260-112.50S.
Valentine, John J.; and Fera, Julius J. Wrap ring assembly for precision no-draft forging. 4,372,144, Cl. 72-352.000.
VALEO: *See—*
  Rogier, Leonce, 4,372,427, Cl. 188-72.100.
Vallaude, Jean P. Internal combustion engine piston. 4,372,194, Cl. 92-176.000.
Van Dorn Company: *See—*
  Stroup, John F.; Robins, Harold J.; and Teeple, Michael, 4,372,910, Cl. 264-532.000.
Vandebult, Jan, to I.D. Engineering, Inc. Loop antenna for security systems. 4,373,163, Cl. 343-842.000.
Van Der Linden, Roy E. Wood-burning stove and method for burning wood. 4,372,287, Cl. 126-79.000.
Van Horn, Ronald L. Hay bale trailer. 4,372,722, Cl. 414-44.000.
Van Mullekom, Hubert P., to Ruti-Te Strake B.V. Method for weaving with a shuttleless weaving machine, and weft preparation device to be used therein. 4,372,349, Cl. 139-452.000.

Van Mullekom, Hubert P., to Ruti-Te Strake B.V. Device for forming store units from a thread supplied from a yarn packet. 4,372,498, Cl. 242-47.010.
Van Rijckevorsel, Rainer: *See—*
  Nenninger, Klaus; and Van Rijckevorsel, Rainer, 4,372,682, Cl. 356-244.000.
Vansteelant, Marc G., to Sperry Corporation. Knotter billhook. 4,372,588, Cl. 289-8.000.
Vansteelant, Marc G., to Sperry Corporation. Knotter apparatus. 4,372,589, Cl. 289-13.000.
Vansteelant, Marc G.: *See—*
  De Coene, Frans J. G. C.; Naaktgeboren, Adrianus; and Vansteelant, Marc G., 4,372,723, Cl. 414-111.000.
Van Thyne, Ray J.: *See—*
  Rausch, John J.; and Van Thyne, Ray J., 4,372,995, Cl. 427-300.000.
Van Uitert, LeGrand G.: *See—*
  Johnson, Leo F.; and Van Uitert, LeGrand G., 4,372,641, Cl. 350-96.120.
Van Zanten, Marinus: *See—*
  Davies, David R.; Richardson, Edwin A.; and Van Zanten, Marinus, 4,372,385, Cl. 166-281.000.
Van Zantwyk, Conrad G., to Oxy-Dry Corporation. Apparatus for removing particulate matter from a gaseous stream. 4,372,760, Cl. 55-227.000.
Vartanian, Haig. External/internal heater for molding of plastics. 4,373,132, Cl. 219-421.000.
Vassiliades, Anthony E. Chromogenic copy system and method. 4,372,583, Cl. 282-27.500.
Veb Kombinat Polygraph "Werner Lamberz": *See—*
  Jentzsch, Arndt; Johne, Hans; Hefftler, Victor; Kuhnert, Werner; and Karl, Reiner, 4,372,209, Cl. 101-409.000.
VEB Kombinat Textima: *See—*
  Aurich, Horst; Bochmann, Brigitta; Grosse, Klaus; Kohler, Eberhard; Nestler, Michael; Ochsenfarth, Hans-Christian; and Seyfarth, Gerhard, 4,372,548, Cl. 271-18.300.
Veda, Inc.: *See—*
  Buschbom, Floyd E.; Henke, Donald L.; and Hansen, Glen D., 4,372,729, Cl. 414-700.000.
Veltri, Richard D.: *See—*
  Galasso, Francis S.; and Veltri, Richard D., 4,373,006, Cl. 428-368.000.
Verdicchio, Robert J.: *See—*
  Lindemann, Martin K. O.; Lukenbach, Elvin R.; and Verdicchio, Robert J., 4,372,869, Cl. 252-174.160.
Vermillion, Don W., to Singer Company, The. Wide-sweep carpet cleaner bristle strip and brush roll. 4,372,004, Cl. 15-182.000.
Versatile Cornat Corporation: *See—*
  Crawley, Harry D., 4,372,341, Cl. 137-580.000.
Verschage, Richard, to Advance Metalworking Co., The. Lift bed tandem axle trailer. 4,372,572, Cl. 280-423.00B.
Vetter, Heinz; and Friederich, Ernst, to Rom GmbH. Extrusion nozzle. 4,372,739, Cl. 425-466.000.
Vicino, Robert K. Fabric faced billboard. 4,372,071, Cl. 40-624.000.
Victor United, Inc.: *See—*
  Simonds, Gary; and McKee, Arnold D., 4,372,285, Cl. 124-90.000.
Victoreen, Inc.: *See—*
  Yurdin, Carl, 4,372,551, Cl. 972-73.000.
Vidrierias de Llodio, S.A.: *See—*
  Galindez, Luis, 4,372,471, Cl. 225-1.000.
Vielhaber, Robert G.: *See—*
  Olson, Alan J.; and Vielhaber, Robert G., 4,373,093, Cl. 528-491.000.
Viesturs, Eric; and Viesturs, Gundar. Thermal treatment device. 4,372,318, Cl. 128-403.000.
Viesturs, Gundar: *See—*
  Viesturs, Eric; and Viesturs, Gundar, 4,372,318, Cl. 128-403.000.
Vijil-Rosales, Cesar A. Apparatus and method for surgical correction of ptolic breasts. 4,372,293, Cl. 128-1.00R.
Villa, Paul Y.; and Day, Alvin D., to Sperry Corporation. Slide interlock and cabinet stabilizer. 4,372,632, Cl. 312-311.000.
Villari, Frank K.; and Cianci, James P., to Kendall Company, The. Body drainage receptacle with anti-septic catheter contact surface in receiving pocket. 4,372,313, Cl. 128-295.000.
Viningauz, Arthur: *See—*
  Chang, Tiang-Shing; Zientek, Lucy J.; Viningauz, Arthur; and Scheps, Marcy L., 4,373,036, Cl. 523-120.000.
Virk, Kashmir S.; and Alperstein, Martin, to Texaco Inc. Method for cyclic rejuvenation of an exhaust gas filter and apparatus. 4,372,111, Cl. 60-274.000.
Visek, Tomas: *See—*
  Dolenc, Anton; and Visek, Tomas, 4,372,179, Cl. 74-579.00E.
Visos, Charles D.; and Ferguson, James M., to Emerson Electric Co. Gas burner head with means for evacuating trapped water condensate. 4,372,290, Cl. 126-355.000.
Vitek, Jaromir: *See—*
  Landa, Vaclav; Vitek, Jaromir; Nejedly, Pavel; Holpuch, Vladimir; Bubelis, Juozas; and Stepanovicius, Atanas-Nemezyus, 4,372,826, Cl. 204-43.00T.
Vitto, Renato: *See—*
  Bellicardi, Francesco; and Vitto, Renato, 4,372,896, Cl. 261-121.00B.
Vlasov, Leonid I.: *See—*
  Sokolov, Sergei S.; Komovsky, Vadim R.; Vlasov, Leonid I.; Boretsky, Boris M.; and Shiryaev, Grigory V., 4,372,121, Cl. 60-606.000.
Vlsi Technology Research Association: *See—*
  Saitoh, Shinji, 4,372,030, Cl. 29-569.00R.
Vodicka, Vincent: *See—*
  Bradley, Irving; and Vodicka, Vincent, 4,372,794, Cl. 156-73.100.
Volkswagenwerk AG: *See—*
  Hofbauer, Peter; Gaschler, Erich; and Schwarz, Cornelia, 4,372,257, Cl. 123-68.000.
Vollenberg, Werner: *See—*
  Seipp, Ulrich; Vollenberg, Werner; Mueller, Bernd; and Michel, Gudrun, 4,372,971, Cl. 424-285.000.
Volleyball World, Inc.: *See—*
  Morgan, Steven R.; and Carlson, Linda A., 4,372,561, Cl. 273-411.000.
von der Decken, Claus-Benedict; Hantke, Hans-Jurgen; and Sturmer, Walter, to Kernforschungsanlage Julich Gesellschaft mit beschrankter Haftung. Method of controlling the reactivity of a gas-cooled core reactor. 4,372,912, Cl. 376-381.000.
von Wimmersperg, Heinrich: *See—*
  von Wimmersperg, Heinrich F., 4,372,122, Cl. 60-634.000.
von Wimmersperg, Heinrich F., to von Wimmersperg, Heinrich. Propellant operator. 4,372,122, Cl. 60-634.000.
Vortech Sciences, Inc.: *See—*
  Hughes, Nathaniel, 4,372,169, Cl. 73-861.520.
Vorys, Nichols. Vaginal delivery for physiologic follicular-luteal steroid treatment. 4,372,951, Cl. 424-239.000.
Vosper, George. Internal combustion engine. 4,372,259, Cl. 123-79.00R.
Vossen, John L., Jr., to RCA Corporation. Plasma etching technique. 4,372,806, Cl. 156-643.000.
Vossen, John L., Jr.; and Halon, Bernard, to RCA Corporation. Plasma etching of aluminum. 4,372,807, Cl. 156-643.000.
W. H. Brady Co.: *See—*
  Frame, Norman J., 4,373,122, Cl. 200-159.00B.
  Frame, Norman J., 4,373,124, Cl. 200-159.00B.
W-K-M Wellhead Systems, Inc.: *See—*
  Diehl, Robert J.; Godare, William L.; and Wells, Frederic D., 4,372,563, Cl. 277-117.000.
Wadsworth, Donald H.: *See—*
  Fletcher, George L.; and Wadsworth, Donald H., 4,373,021, Cl. 430-374.000.
Waine, Martin; and Nisenson, Jules, to General Clutch Corp. Bi-directional clutch. 4,372,432, Cl. 192-8.00C.
Waite, Warren A., to Ionics, Incorporated. Synthesis of anion exchange polymers employing ditertiary amines. 4,373,031, Cl. 521-32.000.
Wakatsuki, Goroei: *See—*
  Watanabe, Masaki; and Wakatsuki, Goroei, 4,372,415, Cl. 180-215.000.
Wakim, Edmond K. Device for indicating direction to a predetermined locale. 4,372,052, Cl. 33-349.000.
Waldschmidt, John E., to Thermo King Corporation. Multiple connector plug removal device. 4,372,635, Cl. 339-45.00M.
Wall, W. Henry. Dental sponge. 4,372,314, Cl. 128-296.000.
Wallner, Theodor: *See—*
  Ganner, Peter; and Wallner, Theodor, 4,372,987, Cl. 427-42.000.
Walter, Richard P.; and Taplin, Lael B., to Bendix Corporation, The. Fuel delivery system with feed and drain line damping. 4,372,272, Cl. 123-467.000.
Walwel, Inc.: *See—*
  Laakmann, Katherine D.; and Laakmann, Peter, 4,373,202, Cl. 372-64.000.
Ward, William, Jr.: *See—*
  Frisch, Georg D.; and Ward, William, Jr., 4,372,508, Cl. 244-122.0AG.
Warner-Lambert Company: *See—*
  Butler, Donald E., 4,372,966, Cl. 424-274.000.
  L'Italien, Yvon J., 4,372,960, Cl. 424-267.000.
Warner, Lucien: *See—*
  Mathews, Lester R., 4,371,994, Cl. 4-490.000.
Warnke, Wayne L.: *See—*
  Yasui, Toshihiro; and Warnke, Wayne L., 4,372,567, Cl. 280-21.00R.
Washabaugh, Frank J., to Engelhard Corporation. Asbestos-free friction material incorporating attapulgite clay. 4,373,037, Cl. 523-155.000.
Watanabe, Katsumi, to Ozen Corporation. Apparatus for electromagnetically imparting stylus force for sound reproducing device comprising an inhibit circuit for shock noise of reproducing stylus. 4,373,199, Cl. 369-31.000.
Watanabe, Masaki; and Wakatsuki, Goroei, to Honda Giken Kogyo Kabushiki Kaisha. Vehicle drive unit. 4,372,415, Cl. 180-215.000.
Watanabe, Masaki: *See—*
  Yamamoto, Hitoshi; Watanabe, Masaki; and Shido, Nobuhiro, 4,372,417, Cl. 180-215.000.
Watanabe, Motokazu: *See—*
  Kubo, Kunimichi; Yoshikawa, Mamoru; Watanabe, Motokazu; Miyazaki, Yasunosuke; and Miyoshi, Mituji, 4,372,919, Cl. 422-137.000.
Watanabe, Seizo: *See—*
  Shibata, Tsutomu; Kimura, Kenji; Satoh, Ken; Saitou, Sinichi; Kato, Toshikazu; Watanabe, Seizo; and Ohshima, Ken, 4,372,504, Cl. 242-198.000.
Watanabe, Takeshi, to Nissan Motor Company, Limited. Fixing structure. 4,372,701, Cl. 403-24.000.
Watanabe, Yutaka; and Matsuo, Hisayasu, to Fujitsu Limited. Thick film fine pattern forming method. 4,373,019, Cl. 430-317.000.
Water Circulation Patents, Inc.: *See—*
  Mathews, Lester R., 4,371,994, Cl. 4-490.000.

Watson, Christopher A., to International Telephone and Telegraph Corporation. Flowmeter. 4,372,168, Cl. 73-861.280.
Watson, Colin; and Dunn, David J., to Loctite Corporation. Device for coating internal threads of a fastener. 4,372,245, Cl. 118-56.000.
Watson, Frederick D.; Mayse, Weldon D.; and Franse, Albert D., to Petrolite Corporation. Radial flow electrofilter. 4,372,837, Cl. 204-186.000.
Waugh, Charles C.; and Wehrli, Robert L., to Waugh Controls Corporation. Flow meter prover apparatus and method. 4,372,147, Cl. 73-3.000.
Waugh Controls Corporation: *See—*
Waugh, Charles C.; and Wehrli, Robert L., 4,372,147, Cl. 73-3.000.
Weant, Charles M. Signal conversion device. 4,373,189, Cl. 364-602.000.
Wear-Ever Aluminum, Inc.: *See—*
Brown, Leo F.; and Myerly, R. S., 4,372,199, Cl. 99-341.000.
Weas, Tom, to Dover Corporation. Arrangements for sensing the presence of liquid in a vapor line. 4,372,353, Cl. 141-206.000.
Weber, Eugen: *See—*
Hale, John M.; and Weber, Eugen, 4,372,021, Cl. 29-235.000.
Weber, Harold J., to Coulter Systems Corp. Image illumination compensation method and apparatus. 4,372,679, Cl. 355-70.000.
Weber S.p.A.: *See—*
Bellicardi, Francesco; and Vitto, Renato, 4,372,896, Cl. 261-121.00B.
Webster Spring Co. Inc.: *See—*
Ramsey, Henry R., 4,372,546, Cl. 267-100.000.
Wehrli, Robert L.: *See—*
Waugh, Charles C.; and Wehrli, Robert L., 4,372,147, Cl. 73-3.000.
Weidner, Albert J.: *See—*
Schultz, Gary E.; and Weidner, Albert J., 4,373,182, Cl. 364-200.000.
Weil, Edward D.: *See—*
Jung, Alfred K.; Silberberg, Joseph; and Weil, Edward D., 4,373,103, Cl. 544-195.000.
Welch, Joseph J.; Grove, William C.; and Moran, Michael E., to Lockheed Corporation. Slot-type accessory mounting. 4,372,517, Cl. 248-267.000.
Well-Pack Systems, Inc.: *See—*
Hamrick, Joseph T.; and Rose, Leslie C., 4,372,389, Cl. 166-369.000.
Wells, Frederic D.: *See—*
Diehl, Robert J.; Godare, William L.; and Wells, Frederic D., 4,372,563, Cl. 277-117.000.
Wells, Kirk P.: *See—*
Gibson, David W.; Hale, Albert L.; Pope, Daniel L.; Rutledge, Donald R.; and Wells, Kirk P., 4,372,535, Cl. 254-319.000.
Wendt, David W.: *See—*
Le Caire, Robert A., Jr.; and Wendt, David W., 4,372,490, Cl. 239-59.000.
Wentworth, Roland A. L. Arithmetical teaching aid. 4,372,742, Cl. 434-199.000.
Wert, John C., III. Polarizing beam splitting phase transition optical modulator. 4,372,653, Cl. 350-385.000.
West Electric Co., Ltd.: *See—*
Iwata, Hiroshi; and Yamaoka, Tetsuo, 4,372,657, Cl. 354-53.000.
Western Electric Company, Inc.: *See—*
Chisholm, William M., 4,372,044. Cl. 29-845.000.
Coucoulas, Alexander; and Nis, John R., 4,372,771, Cl. 65-75.000.
Ellis, Benjamin C., Jr., 4,372,105, Cl. 57-204.000.
Westfalia Separator AG: *See—*
Kiestra, Philippus P.; and Icking, Christian, 4,372,249, Cl. 119-14.170.
Westinghouse Electric Corp.: *See—*
Cookson, Alan H., 4,372,043, Cl. 29-828.000.
Westlund, Erik A., to Wolter Konstruktion Erik Axel Westlund. Method and system for continuous turn-over of soil. 4,372,396, Cl. 172-1.000.
Westphal, John C.: *See—*
Elert, Karl; and Westphal, John C., 4,372,143, Cl. 72-343.000.
Weyerhaeuser Company: *See—*
Wytko, Richard, 4,372,477, Cl. 229-39.00R.
Whelchel, Robert C.: *See—*
Sanderson, Roger S.; and Whelchel, Robert C., 4,372,921, Cl. 422-300.000.
White, Arlton H., to Texas Instruments Incorporated. Seismic exploration system. 4,372,420, Cl. 181-120.000.
White, Charles R.: *See—*
Stillman, Gordon B.; and White, Charles R., 4,372,597, Cl. 294-67.0DA.
White Consolidated Industries, Inc.: *See—*
Pontefract, Robert A., 4,372,652, Cl. 350-319.000.
White, Herbert V., to J. M. Huber Corporation. Folding pallet. 4,372,221, Cl. 108-51.300.
Whiteford, Carl. Multi-purpose turning tool. 4,372,361, Cl. 145-61.00R.
Whitney, Joel G., to Du Pont de Nemours, E. I., and Company. Antiinflammatory 4,5-diaryl-1H-imidazole-2-methanols. 4,372,964, Cl. 424-273.00R.
Whittam, Thomas V.: *See—*
Short, Glyn D.; and Whittam, Thomas V., 4,372,930, Cl. 423-326.000.
Whitten, Charles M.; Scott, Robert H.; and Mansfield, Vaughn, to Mansfield Carbon Products, Inc. Two-stage coal gasification process. 4,372,756, Cl. 48-202.000.
Wichman, Cynthia A., to Kendall Company, The. Disposable garment. 4,371,986, Cl. 2-051.000.
Wickham, Thomas J., to Magnetic Peripherals Inc. Tool for press-fitting a plurality of connector terminals. 4,372,040, Cl. 29-741.000.
Wico Corporation: *See—*
Kim, Syng N., 4,373,123, Cl. 200-159.00A.
Wiemann, Dieter; Seeger, Gunter; and Greten, Berndt, to Bison-Werke Bahre & Greten GmbH & Co. KG. Method of manufacturing particleboard and the like. 4,372,899, Cl. 264-25.000.
Wiener, Dieter; Sulzer, Gerd; Skyba, Rudolf, deceased (by Skyba, Dorothea, legal representative); and Pomp, Jurgen, to Liebherr-Verzahntechnik GmbH. Apparatus for form-grinding the tooth-flanks of a cylindrical gearwheel. 4,372,085, Cl. 51-216.0ND.
Wiers, John W.; Roper, Daniel W.; and Johnson, Richard F., to Rockwell International Corporation. Infinitely variable seat recliner mechanism. 4,372,612, Cl. 297-374.000.
Wilhoit, Darrel L.: *See—*
Newkirk, David D.; and Wilhoit, Darrel L., 4,372,815, Cl. 162-158.000.
Wilkins, Cletus W., Jr.: *See—*
Reichmanis, Elsa; Roman, Bernard J.; Tai, King L.; and Wilkins, Cletus W., Jr., 4,373,018, Cl. 430-312.000.
Williamson, Roger J.: *See—*
Pitt, Gillies D.; and Williamson, Roger J., 4,372,165, Cl. 73-861.220.
Willits, Samuel P.: *See—*
Mohan, William L.; Willits, Samuel P.; and Kleeman, Thomas E., 4,373,135, Cl. 377-8.000.
Wilputte Corporation: *See—*
Naevestad, Roy, 4,372,820, Cl. 202-248.000.
Wilson, Robert C., Jr.: *See—*
Oleck, Stephen M.; and Wilson, Robert C., Jr., 4,372,839, Cl. 208-59.000.
Windmoller & Holscher: *See—*
Achelpohl, Fritz; and Feldkamper, Richard, 4,372,436, Cl. 198-377.000.
Winkelman, John H., to Artos Engineering Company. Wire conveying clamp and apparatus for assembly of accurately sized wire ends to a terminal. 4,372,041, Cl. 29-747.000.
Winkler, Jerzy; and Stankiewicz, Jerzy, to Instytut Elektrotechniki Oddzial Technologii i Materialoznawstwa Elektrotechnicznego. High-voltage polymeric insulator with sheath of elastic and rigid segments and method of making same. 4,373,113, Cl. 174-179.000.
Winn, R. Alastair, to International Silicone Corporation. Method of forming a hydrophilic coating on a substrate. 4,373,009, Cl. 428-424.200.
Winslow, John M., to Minnesota Mining and Manufacturing Company. Decolorizable imaging system. 4,373,020, Cl. 430-339.000.
Winter, William: *See—*
Gooch, Kendrick J.; Scharer, Hans R.; and Winter, William, 4,372,736, Cl. 425-149.000.
Witthaus, Martin: *See—*
Saran, Herbert; Witthaus, Martin; Smulders, Eduard; and Schwadtke, Karl, 4,372,868, Cl. 252-102.000.
Wojno, Jan: *See—*
Cymbalisty, Lubomyr M.; Maskwa, Alvin J.; Trevoy, Lloyd W.; and Wojno, Jan, 4,372,174, Cl. 73-863.110.
Wojtech, Bernhard; Kiessling, Hans-Joachim; Becker, Wilhelm; and Hermann, Kurt, to Hoechst Aktiengesellschaft. Process for the preparation of glycidyl ethers of monohydric or polyhydric phenols, the glycidyl ethers and use thereof. 4,373,073, Cl. 525-507.000.
Wolf, Jakob; and Juhas, Simon, to J. M. Voith GmbH. Head box for a paper making machine. 4,372,816, Cl. 162-343.000.
Wolfe, W. Roger. Bag supporting apparatus. 4,372,512, Cl. 248-97.000.
Wolter Konstruktion Erik Axel Westlund: *See—*
Westlund, Erik A., 4,372,396, Cl. 172-1.000.
Wong, Yuan N.: *See—*
Mandle, Richard M.; and Wong, Yuan N., 4,372,745, Cl. 436-537.000.
Woo Seop, Choi. Cigarette package which has device to open and close. 4,372,443, Cl. 206-264.000.
Wood, Douglas E. Parabolic reflector comprising a plurality of triangular reflecting members forming a reflecting surface supported by a framework having a particular geometric pattern. 4,372,772, Cl. 65-106.000.
Wood, Jerold D.; and Stacy, Carl J., to Phillips Petroleum Company. Rubber compositions containing silica and tackifier resins. 4,373,041, Cl. 524-77.000.
Woods, Dale G.: *See—*
Woods, Verle W.; Woods, Jay A.; and Woods, Dale G., 4,372,918, Cl. 422-129.000.
Woods, Jay A.: *See—*
Woods, Verle W.; Woods, Jay A.; and Woods, Dale G., 4,372,918, Cl. 422-129.000.
Woods, Kenneth D. Air flow delivery system. 4,372,550, Cl. 271-211.000.
Woods, Verle W.; Woods, Jay A.; and Woods, Dale G. Flow through pressure reaction apparatus. 4,372,918, Cl. 422-129.000.
Woodward, David R.: *See—*
Hadler, Malcolm R.; Woodward, David R.; and Godfrey, Andrew A., 4,372,970, Cl. 424-282.000.
Woodward, Mervin: *See—*
Lane, David; Woodward, Mervin; and Kilpatrick, Jerry B., 4,372,637, Cl. 339-244.00R.
Woratyla, John A.: *See—*
Ritchie, Leon T.; Snyder, Clair W., Jr.; Toeppen, Thurston H.; and Woratyla, John A., 4,372,634, Cl. 339-17.00C.
Work, Casey N. Brush clearing apparatus for a bulldozer blade. 4,372,063, Cl. 37-2.00R.

Wright, Herschel E., to Beckman Instruments, Inc. Fluid containment annulus for fixed angle rotors. 4,372,483, Cl. 494-16.000.
Wright, Lawrence H.: *See—*
Clyne, Nicholas; Sturgeon, Philip L.; and Wright, Lawrence H., 4,373,133, Cl. 235-383.000.
Wu, Yao H.; and Lobeck, Walter G., Jr., to Mead Johnson & Company. Iminopyrrolidinylindoles. 4,372,887, Cl. 548-468.000.
Wuelfing, Johann A.: *See—*
Jozic, Ljerka, 4,372,955, Cl. 424-250.000.
Wuerzer, Bruno: *See—*
Rohr, Wolfgang; Schirmer, Ulrich; and Wuerzer, Bruno, 4,373,105, Cl. 560-27.000.
Wunder, Friedrich; Leupold, Ernst I.; Hachenberg, Horst; Schmidt, Hans-Joachim; and Unger, Klaus, to Hoechst Aktiengesellschaft. Process for the preparation of an aluminum silicate catalyst for converting methanol containing water and/or dimethyl ether containing water into lower olefins. 4,372,878, Cl. 252-455.00Z.
Wurst, John W.: *See—*
Odermann, Charles R.; and Wurst, John W., 4,372,231, Cl. 112-158.00B.
Wyslotsky, Thor, to TEC, Inc. Method of making and filling a package for sliced commestible. 4,372,097, Cl. 53-405.000.
Wytko, Richard, to Weyerhaeuser Company. Container. 4,372,477, Cl. 229-39.00R.
Xerox Corporation: *See—*
Azar, Jack C.; Henry, Arnold W.; and Ferguson, Robert M., 4,372,246, Cl. 118-60.000.
Carpenter, Vance J.; and Smith, Abbott, 4,372,670, Cl. 355-8.000.
Fantuzzo, Joseph; and Till, Henry R., 4,372,669, Cl. 355-3.00R.
Malachowski, Michael A.; Shur, Victor; and Thettu, Raghulinga R., 4,372,668, Cl. 355-3.00R.
Noonan, D. Thomas, 4,372,515, Cl. 248-178.000.
Prest, William M., Jr., 4,373,065, Cl. 525-132.000.
Sahay, Ravi B., 4,372,675, Cl. 355-14.0FU.
Yagi, Kazuhisa; Suzuki, Sho; and Nakashima, Norihiko, to Kao Soap Co., Ltd. Color deepening agent. 4,373,043, Cl. 524-130.000.
Yamada, Hideaki; Tani, Yoshiki; and Isobe, Kimiyasu, to Amano Pharmaceutical Co., Ltd. Microbial polyamide oxidase PC-3 and process for preparation thereof. 4,373,026, Cl. 435-191.000.
Yamada, Masahiko: *See—*
Toda, Nobuhiro; and Yamada, Masahiko, 4,372,824, Cl. 204-25.000.
Yamada, Tetsuo, to Tokyo Shibaura Denki Kabushiki Kaisha. Solid state image sensor with overflow protection and high resolution. 4,373,167, Cl. 357-24.000.
Yamagami, Seiji; Nonaka, Hirohiko; Shimonaru, Tuneyoshi; Takashima, Koichi; and Kato, Yasuhiko, to Daicel Chemical Industries Ltd. Blood purification system. 4,372,846, Cl. 210-86.000.
Yamaha Hatsudoki Kabushiki Kaisha: *See—*
Igarashi, Nihaku, 4,372,416, Cl. 180-215.000.
Iwai, Tomio, 4,372,258, Cl. 123-73.0AD.
Yasui, Toshihiro; and Warnke, Wayne L., 4,372,567, Cl. 280-21.00R.
Yamamoto, Akio: *See—*
Matuhashi, Tyoku; Usui, Mitsuko; Yamamoto, Akio; Mitsuhashi, Masakazu; and Koyama, Shunsaku, 4,372,883, Cl. 260-112.00R.
Yamamoto, Hitoshi; Watanabe, Masaki; and Shido, Nobuhiro, to Honda Giken Kogyo Kabushiki Kaisha. Drive unit mounting structure. 4,372,417, Cl. 180-215.000.
Yamamoto, Kenji: *See—*
Hanabusa, Takayoshi; Yamamoto, Kenji; Umemoto, Shinzi; Kurosawa, Keiji; and Yamashita, Mitsuo, 4,372,804, Cl. 156-631.000.
Yamamoto, Ryozo; Yanase, Keiichi; and Oku, Junzo, to Kubota, Ltd. Valve. 4,372,532, Cl. 251-175.000.
Yamana, Toru, to Murakami Kaimeido Co., Ltd. Rear-view mirror control actuator. 4,372,177, Cl. 74-501.00M.
Yamanouchi Pharmaceutical Co., Ltd.: *See—*
Imai, Kazuo; Niigata, Kunihiro; Fujikura, Takashi; Hashimoto, Shinichi; and Takenaka, Toichi, 4,373,106, Cl. 564-85.000.
Yamaoka, Tetsuo: *See—*
Iwata, Hiroshi; and Yamaoka, Tetsuo, 4,372,657, Cl. 354-53.000.
Yamashita, Atsuko: *See—*
Sugiyama, Takeshi; Shirouchi, Shoji; Tsuchiya, Osamu; Onoda, Mamoru; Yamashita, Atsuko; Fujita, Isao; and Imanishi, Nobuyuki, 4,372,779, Cl. 75-0.50R.
Yamashita, Kiyoshi: *See—*
Masukawa, Toyoaki; Ishikawa, Wataru; Okaniwa, Kenichiro; and Yamashita, Kiyoshi, 4,373,017, Cl. 430-270.000.
Yamashita, Mitsuo: *See—*
Hanabusa, Takayoshi; Yamamoto, Kenji; Umemoto, Shinzi; Kurosawa, Keiji; and Yamashita, Mitsuo, 4,372,804, Cl. 156-631.000.
Yanagawa, Nobuyuki; and Mizuma, Kenichi, to Ricoh Company, Ltd. Sheet feed apparatus. 4,372,547, Cl. 271-10.000.
Yanagiuchi, Shigenobu; and Kanou, Ikuo, to Sharp Kabushiki Kaisha. Display device of an electronic language interpreter. 4,373,192, Cl. 364-900.000.
Yanase, Keiichi: *See—*
Yamamoto, Ryozo; Yanase, Keiichi; and Oku, Junzo, 4,372,532, Cl. 251-175.000.
Yasui, Toshihiro; and Warnke, Wayne L., to Yamaha Hatsudoki Kabushiki Kaisha. Anti-rolling system for snowmobile of small size. 4,372,567, Cl. 280-21.00R.
Yin, Robert I., to Merck & Co., Inc. Blends of algin, tamarind, and a polycationic electroconductive polymer. 4,373,011, Cl. 428-537.000.
Yokoyama, Koji: *See—*
Arai, Tadashi; Takahashi, Katsuhiro; Ishiguro, Kimiko; and Yokoyama, Koji, 4,372,947, Cl. 424-121.000.
York-Shipley, Inc.: *See—*
Korenberg, Jakob, 4,372,228, Cl. 110-347.000.
Yoshida Kogyo K.K.: *See—*
Satoo, Masaharu, 4,372,999, Cl. 428-193.000.
Yoshida, Takao: *See—*
Light, Kenneth K.; McGhie, Joseph A.; Fujioka, Futoshi; and Yoshida, Takao, 4,373,108, Cl. 568-817.000.
Yoshikawa, Mamoru: *See—*
Kubo, Kunimichi; Yoshikawa, Mamoru; Watanabe, Motokazu; Miyazaki, Yasunosuke; and Miyoshi, Mituji, 4,372,919, Cl. 422-137.000.
Yoshikumi, Chikao; Fujii, Takayoshi; Saito, Kenichi; Fujii, Masahiko; and Niimura, Koichi, to Kureha Kagaku Kogyo Kabushiki Kaisha. Platinum compound. 4,372,890, Cl. 260-429.00R.
Yoshikumi, Chikao; Hirose, Fumio; Ohmura, Yoshio; Fujii, Takayoshi; Ikuzawa, Masanori; Matsunaga, Kenichi; Ando, Takao; and Ohhara, Minoru, to Kureha Kagaku Kogyo Kabushiki Kaisha. Derivative of saccharide and physiologically active agent containing the same. 4,372,948, Cl. 424-180.000.
Yoshino Kogyosho Co., Ltd.: *See—*
Yoshino, Yataro; Ota, Akiho; and Sugiura, Hiroaki, 4,372,909, Cl. 264-521.000.
Yoshino, Yataro; Ota, Akiho; and Sugiura, Hiroaki, to Yoshino Kogyosho Co., Ltd. Method of producing a bottle of saturated polyester resin. 4,372,909, Cl. 264-521.000.
Yoshizumi, Motohiko, to Mitsubishi Kinzoku Kabushiki Kaisha. Electroconductive powder and process for production thereof. 4,373,013, Cl. 428-570.000.
Young, Kenneth E., to Exxon Production Research Co. Emergency cable gripper. 4,372,706, Cl. 405-195.000.
Yu, Bu-Fan B.; and Goldman, Alex, to Spang Industries, Inc. Carbonate/hydroxide coprecipitation process. 4,372,865, Cl. 252-62.620.
Yukawa, Koji; Miyazaki, Masayuki; and Murahashi, Takashi, to Konishiroku Photo Industry Co., Ltd. Copying machine having detectors for the background color and density of the original. 4,372,674, Cl. 355-14.00D.
Yurdin, Carl, to Victoreen, Inc. Cardiac stress table. 4,372,551, Cl. 972-73.000.
Zamboni, Frank J., to Frank J. Zamboni & Co. Ice edger for ice resurfacing machine. 4,372,617, Cl. 299-24.000.
Zamory, William: *See—*
Lerman, Michael J.; and Zamory, William, 4,372,461, Cl. 220-260.000.
Zardi, Umberto, to Ammonia Casale S.A., a part interest. Axial-radial reactor for heterogeneous synthesis. 4,372,920, Cl. 422-148.000.
Zaydel, Wieslaw S., to General Motors Corporation. Tail lamp attachment. 4,372,718, Cl. 411-366.000.
Zeidler, Georg: *See—*
Eilingsfeld, Heinz; Hansen, Guenter; Seybold, Guenther; and Zeidler, Georg, 4,372,885, Cl. 260-158.000.
Zharov, Vladimir P. Laser-excited spectrophone. 4,372,149, Cl. 73-24.000.
Zientek, Lucy J.: *See—*
Chang, Tiang-Shing; Zientek, Lucy J.; Viningauz, Arthur; and Scheps, Marcy L., 4,373,036, Cl. 523-120.000.
Zimet, Elihu: *See—*
Toton, Edward T.; and Zimet, Elihu, 4,372,214, Cl. 102-305.000.
Zimmerman, George F.: *See—*
Hagelberg, Allen C.; Allardt, Clark E.; Lobitz, Walter A.; Thornburg, Robert O.; Zimmerman, George F.; Letterman, Gary L.; and Helbron, John W., 4,372,239, Cl. 114-20.00A.
Zimmerman, Robert L.: *See—*
Speranza, George P.; Cuscurida, Michael; and Zimmerman, Robert L., 4,373,034, Cl. 521-177.000.
Zink, Rudolf; and Loew, Peter, to Ciba-Geigy Corporation. Process for the production of carbinol bases from indoline compounds. 4,372,886, Cl. 260-165.000.
Zoecon Corporation: *See—*
Papanu, Steven C.; and Curtis, Ralston, 4,372,943, Cl. 424-78.000.
Zottino, Giuseppe: *See—*
Baldanello, Umberto; and Zottino, Giuseppe, 4,372,367, Cl. 160-310.000.
Zsolnay, Andrew, to Lockheed Corporation. Method of process control for thermosetting resins having addition-type reactions. 4,373,092, Cl. 528-481.000.
Zucker, Joseph; and Fitch, Arthur H., to GTE Automatic Electric Laboratories, Inc. Method of splicing ends of optical fibers. 4,372,768, Cl. 65-4.210.

LIST OF REISSUE PATENTEES

TO WHOM

PATENTS WERE ISSUED ON THE 8TH DAY OF FEBRUARY, 1983

NOTE.—Arranged in accordance with the first significant character or word of the name (in accordance with city and telephone directory practice).

AMP Incorporated: *See—*
Simmons, Reginald J., Re. 31,142, Cl. 339-74.00R.
Avtec Industries, Inc.: *See—*
Helwig, William F., Jr.; and Jeffries, Henry D., Jr., Re. 31,147, Cl. 361-42.000.
Bartels, Bernard E. Window shade, curtain, or drapery rod corner bracket. Re. 31,141, Cl. 248-270.000.
Bjorke, Merlin D., to Honeywell Inc. Interruptable signal generator. Re. 31,145, Cl. 307-608.000.
Feil, Thomas E., to Interconnect Planning Corporation. Multi-station telephone switching system. Re. 31,144, Cl. 179-99.0LS.
Gyursanszky, Zoltan L., to Honeywell Ltd. Two-wire ballast for fluorescent tube dimming. Re. 31,146, Cl. 315-276.000.
Helwig, William F., Jr.; and Jeffries, Henry D., Jr., to Avtec Industries, Inc. Ground fault and fire detector system. Re. 31,147, Cl. 361-42.000.
Honeywell Inc.: *See—*
Bjorke, Merlin D., Re. 31,145, Cl. 307-608.000.
Honeywell Ltd.: *See—*
Gyursanszky, Zoltan L., Re. 31,146, Cl. 315-276.000.
Interconnect Planning Corporation: *See—*
Feil, Thomas E., Re. 31,144, Cl. 179-99.0LS.
Jeffries, Henry D., Jr.: *See—*
Helwig, William F., Jr.; and Jeffries, Henry D., Jr., Re. 31,147, Cl. 361-42.000.
Kaye, Morton, deceased; and by Kaye, Sylvia, executrix. Measurement system. Re. 31,143, Cl. 356-381.000.
Kaye, Sylvia, executrix: *See—*
Kaye, Morton, deceased; and Kaye, Sylvia, executrix, Re. 31,143, Cl. 356-381.000.
Martinmaas, Werner W. Socket wrench with interchangeable sockets stored in handle. Re. 31,140, Cl. 81-177.00N.
Simmons, Reginald J., to AMP Incorporated. Electrical tab receptacle. Re. 31,142, Cl. 339-74.00R.

LIST OF REEXAMINATION PATENTEES

TO WHOM

CERTIFICATES WERE ISSUED

Piercy, David R., to J. & S. Sieger Limited. Gas detection. B1 4,251,727, Cl. 250—343.
J. & S. Sieger Limited: See—
Piercy, David R. B1 4,251,727, Cl. 250—343.

LIST OF DESIGN PATENTEES

Ahn, Chong T. Music box. 267,885, 2-8-83, Cl. D17-24.000.
Albertini, Sauro. Fiber tipped pen. 267,886, 2-8-83, Cl. D19-43.000.
Albertson, Robert V. Forced air waste oil incinerator. 267,897, 2-8-83, Cl. D23-92.000.
Amana Refrigeration, Inc.: *See—*
Boldt, Melvin H.; Stevens, James P.; and Wojtowicz, Chester J., 267,851, Cl. D7-351.000.
American Can Company: *See—*
Schulz, Galyn A., 267,907, Cl. D59-2.00B.
Anderson, Arne E. E. Combined clasp and toggle for necktie or the like. 267,833, 2-8-83, Cl. D2-407.000.
Arai, Toshimitsu. Glass cutter. 267,853, 2-8-83, Cl. D8-51.000.
Arnseth, Arnette R.; and Celendano, Theresa A. Dress for the infirm. 267,830, 2-8-83, Cl. D2-82.000.
Astor, Barbara; and Snyder, Terry E., to Revlon, Inc. Display holder. 267,857, 2-8-83, Cl. D9-345.000.
Benichou, Henri, to Galerie Shirvane. Box for file cards. 267,836, 2-8-83, Cl. D3-78.000.
Benton, Charles C.: *See—*
Migani, Joseph C.; and Benton, Charles C., 267,837, Cl. D6-27.000.
Bevilaqua, Ernest M.; McCroskery, Allan L.; and Knerr, Theodore N., to Otis Elevator Company. Control panel for elevator systems. 267,870, 2-8-83, Cl. D13-35.000.
Bisacca, Mildred J.: *See—*
Witt, Frank H., Jr., 267,854, Cl. D9-307.000.
Boldt, Melvin H.; Stevens, James P.; and Wojtowicz, Chester J., to Amana Refrigeration, Inc. Combination microwave and convection oven. 267,851, 2-8-83, Cl. D7-351.000.
Brescia, Anthony J.; and Rhoads, Spencer, to Syroco, Inc. Storage unit. 267,842, 2-8-83, Cl. D6-131.000.
Brown, Wilbert C.; and Saba, Philip B., to TIE/Communications, Inc. Base for a telephone set. 267,873, 2-8-83, Cl. D14-60.000.
Buhk, Randall P.; Hozeski, Kenneth W.; and Karrip, Alex, to Steelcase Inc. Chair. 267,838, 2-8-83, Cl. D6-31.000.
Burian, Paul D.; and Rogers, Meyrick K., to Clairol Incorporated. Facial sauna. 267,898, 2-8-83, Cl. D23-148.000.
Celendano, Theresa A.: *See—*
Arnseth, Arnette R.; and Celendano, Theresa A., 267,830, Cl. D2-82.000.
Chiku, Akira: *See—*
Hosogai, Hideyuki; Chiku, Akira; and Kumano, Toshihiro, 267,878, Cl. D14-94.000.
Christian, Hubert E.: *See—*
Groenewold, Van D.; Christian, Hubert E.; and Schwartz, James P., 267,849, Cl. D7-6.000.
Groenewold, Van D.; Christian, Hubert E.; and Schwartz, James P., 267,850, Cl. D7-6.000.
Citizen Watch Company, Limited: *See—*
Kabaya, Harumichi, 267,859, Cl. D10-31.000.
Kabaya, Harumichi, 267,860, Cl. D10-32.000.
Clairol Incorporated: *See—*
Burian, Paul D.; and Rogers, Meyrick K., 267,898, Cl. D23-148.000.
Clayton Corporation: *See—*
French, Floyd R., 267,855, Cl. D9-434.000.
Cohen, Piet, to Materias Plasticas, Limitada. Towel rack. 267,840, 2-8-83, Cl. D6-99.000.
Cohen, Piet, to Materias Plasticas, Limitada. Shelf. 267,844, 2-8-83, Cl. D6-136.000.
Combi Co., Ltd.: *See—*
Nakao, Shinroku; and Kobayashi, Kouichi, 267,863, Cl. D12-129.000.
Convergent Technologies, Inc.: *See—*
Keely, Leroy B.; Nuttall, Michael J.; and Moggridge, William G., 267,879, Cl. D14-100.000.
Current, Wayne A., to Singer Company, The. Sewing machine. 267,881, 2-8-83, Cl. D15-68.000.
Dairy Farm Leasing Company: *See—*
Keith, Alfred H., 267,905, Cl. D30-1.000.
Dart Industries Inc.: *See—*
Groenewold, Van D.; Christian, Hubert E.; and Schwartz, James P., 267,849, Cl. D7-6.000.
Groenewold, Van D.; Christian, Hubert E.; and Schwartz, James P., 267,850, Cl. D7-6.000.

Dowling, Jeanette M. Combined serving tray and condiment dishes. 267,848, 2-8-83, Cl. D7-3.000.
Eagle Aircraft Company: *See—*
Wilson, Weldon D., 267,868, Cl. D12-331.000.
England, Bert, to Towle Manufacturing Company. Knife or similar article. 267,852, 2-8-83, Cl. D7-137.000.
Ernst Leitz Wetzlar GmbH: *See—*
Uellenberg, Hans-Kurt; and Janke, Heinrich, 267,884, Cl. D16-8.000.
Fackert, James H. Foot operated lighting control. 267,871, 2-8-83, Cl. D13-36.000.
Flik, Inc.: *See—*
Kolm, Henry H.; and Kolm, Eric A., 267,899, Cl. D26-40.000.
Forsberg, John R.: *See—*
Meisner, Edward H.; and Forsberg, John R., 267,902, Cl. D28-11.000.
French, Floyd R., to Clayton Corporation. Pressurized container piston. 267,855, 2-8-83, Cl. D9-434.000.
Fukushima, Hisao; and Hirooka, Junji, to Oki Electric Industry Co., Ltd. Car telephone set. 267,872, 2-8-83, Cl. D14-53.000.
Galerie Shirvane: *See—*
Benichou, Henri, 267,836, Cl. D3-78.000.
General Electric Co.: *See—*
Lenz, Henry G.; and Stewart, Earl K., 267,869, Cl. D13-1.000.
Groenewold, Van D.; Christian, Hubert E.; and Schwartz, James P., to Dart Industries Inc. Embossed beverage or packaging cup. 267,849, 2-8-83, Cl. D7-6.000.
Groenewold, Van D.; Christian, Hubert E.; and Schwartz, James P., to Dart Industries Inc. Embossed beverage or packaging cup. 267,850, 2-8-83, Cl. D7-6.000.
Gross, Jules P., to Pathfinder Auto Lamp Company; and National Rubber Company, Ltd. Automotive splash guard. 267,865, 2-8-83, Cl. D12-185.000.
GRRN Company: *See—*
Witt, Frank H., Jr., 267,854, Cl. D9-307.000.
Hagland, Kerstin M.: *See—*
Hanses, Ulf M.; and Hagland, Kerstin M., 267,892, Cl. D21-16.000.
Hailey, Ellis R. Basketball shooting toy. 267,891, 2-8-83, Cl. D21-2.000.
Hampel, Lance T.; and Sacia, Roger R., to L. T. Hampel Corp. Animal shelter. 267,904, 2-8-83, Cl. D30-1.000.
Hanses, Ulf M.; and Hagland, Kerstin M. Board for playing games. 267,892, 2-8-83, Cl. D21-16.000.
Heck, Bennett L. Pocket carrying case. 267,903, 2-8-83, Cl. D28-79.000.
Helene Curtis Industries, Inc.: *See—*
Meisner, Edward H.; and Forsberg, John R., 267,902, Cl. D28-11.000.
Hirooka, Junji: *See—*
Fukushima, Hisao; and Hirooka, Junji, 267,872, Cl. D14-53.000.
Honda Giken Kogyo Kabushiki Kaisha: *See—*
Kimura, Kazutaka; and Yamamoto, Mituru, 267,862, Cl. D12-110.000.
Hosogai, Hideyuki; Chiku, Akira; and Kumano, Toshihiro, to MatsushitaGraphic Communication System. Facsimile transceiver. 267,878, 2-8-83, Cl. D14-94.000.
Hozeski, Kenneth W.: *See—*
Buhk, Randall P.; Hozeski, Kenneth W.; and Karrip, Alex, 267,838, Cl. D6-31.000.
Ishii, Motoko, to Motoko Ishii Lighting Design Incorporated. Lighting fixture. 267,900, 2-8-83, Cl. D26-83.000.
Janke, Heinrich: *See—*
Uellenberg, Hans-Kurt; and Janke, Heinrich, 267,884, Cl. D16-8.000.
Johnstonbaugh, Forrest C. Liquid ashtray. 267,901, 2-8-83, Cl. D27-08.000.
Kabaya, Harumichi, to Citizen Watch Company, Limited. Ring with watch. 267,859, 2-8-83, Cl. D10-31.000.
Kabaya, Harumichi, to Citizen Watch Company Limited. Wrist watch. 267,860, 2-8-83, Cl. D10-32.000.
Kabushiki Kaisha Daini Seikosha: *See—*
Ohsawa, Eiichi, 267,861, Cl. D10-39.000.
Karrip, Alex: *See—*
Buhk, Randall P.; Hozeski, Kenneth W.; and Karrip, Alex, 267,838, Cl. D6-31.000.
Keely, Leroy B.; Nuttall, Michael J.; and Moggridge, William G., to Convergent Technologies, Inc. Computer keyboard or similar article. 267,879, 2-8-83, Cl. D14-100.000.
Keith, Alfred H., to Dairy Farm Leasing Company. Animal shelter. 267,905, 2-8-83, Cl. D30-1.000.
Kimura, Kazutaka; and Yamamoto, Mituru, to Honda Giken Kogyo Kabushiki Kaisha. Motor tricycle. 267,862, 2-8-83, Cl. D12-110.000.
Kloss Video Corporation: *See—*
Mitchell, Bernard; and Price, John F., 267,875, Cl. D14-79.000.
Knerr, Theodore N.: *See—*
Bevilaqua, Ernest M.; McCroskery, Allan L.; and Knerr, Theodore N., 267,870, Cl. D13-35.000.
Kobayashi, Kouichi: *See—*
Nakao, Shinroku; and Kobayashi, Kouichi, 267,863, Cl. D12-129.000.
Kolm, Eric A.: *See—*
Kolm, Henry H.; and Kolm, Eric A., 267,899, Cl. D26-40.000.
Kolm, Henry H.; and Kolm, Eric A., to Flik, Inc. Electronic stroboscopic light. 267,899, 2-8-83, Cl. D26-40.000.
Kumano, Toshihiro: *See—*
Hosogai, Hideyuki; Chiku, Akira; and Kumano, Toshihiro, 267,878, Cl. D14-94.000.
L. T. Hampel Corp.: *See—*
Hampel, Lance T.; and Sacia, Roger R., 267,904, Cl. D30-1.000.
Lenger, Sidney A., Jr., to Singer Company, The. Bed headboard or similar article. 267,839, 2-8-83, Cl. D6-80.000.
Lenger, Sidney A., Jr., to Singer Company, The. Dresser or similar article. 267,845, 2-8-83, Cl. D6-154.000.
Lenz, Henry G.; and Stewart, Earl K., to General Electric Co. Housing for electric motor. 267,869, 2-8-83, Cl. D13-1.000.
Leslie, Dennis R. Combined support for beverage cooler and drinking glasses. 267,841, 2-8-83, Cl. D6-130.000.
Levine, Rosalie S.: *See—*
Witt, Frank H., Jr., 267,854, Cl. D9-307.000.
Litton Business Systems, Inc.: *See—*
Platner, Warren, 267,846, Cl. D6-161.000.
M/M Verdi International, Inc.: *See—*
Stark, Ted, 267,835, Cl. D3-71.000.
Malmin, John K., to Parker, Walter, a part interest. Television static electricity grounding rod. 267,876, 2-8-83, Cl. D14-90.000.
Marsden, Barbara B.: *See—*
Marsden, Floyd, 267,867, Cl. D12-317.000.
Marsden, Floyd, to Marsden, Barbara B. Sailing rig. 267,867, 2-8-83, Cl. D12-317.000.
Marshall, Eric J. Display terminal or similar article. 267,880, 2-8-83, Cl. D14-113.000.
Materias Plasticas, Limitada: *See—*
Cohen, Piet, 267,840, Cl. D6-99.000.
Cohen, Piet, 267,844, Cl. D6-136.000.
Matsui, Hidetoshi. Kinetic sculpture. 267,894, 2-8-83, Cl. D21-102.000.
MatsushitaGraphic Communication System: *See—*
Hosogai, Hideyuki; Chiku, Akira; and Kumano, Toshihiro, 267,878, Cl. D14-94.000.
McCroskery, Allan L.: *See—*
Bevilaqua, Ernest M.; McCroskery, Allan L.; and Knerr, Theodore N., 267,870, Cl. D13-35.000.
Meisner, Edward H.; and Forsberg, John R., to Helene Curtis Industries, Inc. Hair styling unit container. 267,902, 2-8-83, Cl. D28-11.000.
Migani, Joseph C.; and Benton, Charles C., to Migani, Joseph C. Heliodon. 267,837, 2-8-83, Cl. D6-27.000.
Mitchell, Bernard; and Price, John F., to Kloss Video Corporation. Projection television unit. 267,875, 2-8-83, Cl. D14-79.000.
Moggridge, William G.: *See—*
Keely, Leroy B.; Nuttall, Michael J.; and Moggridge, William G., 267,879, Cl. D14-100.000.
Motoko Ishii Lighting Design Incorporated: *See—*
Ishii, Motoko, 267,900, Cl. D26-83.000.
Nakao, Shinroku; and Kobayashi, Kouichi, to Combi Co., Ltd. Baby stroller. 267,863, 2-8-83, Cl. D12-129.000.
National Rubber Company, Ltd.: *See—*
Gross, Jules P., 267,865, Cl. D12-185.000.
Nuttall, Michael J.: *See—*
Keely, Leroy B.; Nuttall, Michael J.; and Moggridge, William G., 267,879, Cl. D14-100.000.
Nuttall, Michael W.; and Takahashi, Yuichi, to Tomy Kogyo Co., Inc. Wheeled toy figure. 267,896, 2-8-83, Cl. D21-161.000.
Ohsawa, Eiichi, to Kabushiki Kaisha Daini Seikosha. Wristwatch. 267,861, 2-8-83, Cl. D10-39.000.
Oki Electric Industry Co., Ltd.: *See—*
Fukushima, Hisao; and Hirooka, Junji, 267,872, Cl. D14-53.000.
Otis Elevator Company: *See—*
Bevilaqua, Ernest M.; McCroskery, Allan L.; and Knerr, Theodore N., 267,870, Cl. D13-35.000.
Parise, Carl; and Schulz, Rainer R., to Parise & Sons, Inc. Electrified vacuum hose for a wet/dry vaccum cleaner. 267,906, 2-8-83, Cl. D32-31.000.
Parise & Sons, Inc.: *See—*
Parise, Carl; and Schulz, Rainer R., 267,906, Cl. D32-31.000.
Parker, Walter: *See—*
Malmin, John K., 267,876, Cl. D14-90.000.
Parsons, Vaughan V. Boat. 267,866, 2-8-83, Cl. D12-311.000.
Pask, James B. Disposable boot. 267,832, 2-8-83, Cl. D2-271.000.
Pathfinder Auto Lamp Company: *See—*
Gross, Jules P., 267,865, Cl. D12-185.000.
Petrie, Patrick. Puzzle. 267,895, 2-8-83, Cl. D21-105.000.
Pielert, Fred T. Combined spice rack and storage unit. 267,847, 2-8-83, Cl. D6-188.000.
Platner, Warren, to Litton Business Systems, Inc. Desk or similar article. 267,846, 2-8-83, Cl. D6-161.000.
Price, John F.: *See—*
Mitchell, Bernard; and Price, John F., 267,875, Cl. D14-79.000.
Reese, Jens, to Siemens Aktiengesellschaft. Facsimilie transceiver. 267,877, 2-8-83, Cl. D14-94.000.
Revlon, Inc.: *See—*
Astor, Barbara; and Snyder, Terry E., 267,857, Cl. D9-345.000.
Rhoads, Spencer: *See—*
Brescia, Anthony J.; and Rhoads, Spencer, 267,842, Cl. D6-131.000.
Rigoni, Herbert. Pen. 267,887, 2-8-83, Cl. D19-49.000.
Rogers, Meyrick K.: *See—*
Burian, Paul D.; and Rogers, Meyrick K., 267,898, Cl. D23-148.000.
Saba, Philip B.: *See—*
Brown, Wilbert C.; and Saba, Philip B., 267,873, Cl. D14-60.000.
Sacia, Roger R.: *See—*
Hampel, Lance T.; and Sacia, Roger R., 267,904, Cl. D30-1.000.
Samuels, Alfred P., Jr. Hanging sign board. 267,889, 2-8-83, Cl. D20-41.000.
Samuels, Alfred P., Jr. Post supported sign board. 267,890, 2-8-83, Cl. D20-41.000.

Schouten, Henderikus P., to U.S. Philips Corporation. Clock radio receiver. 267,874, 2-8-83, Cl. D14-73.000.
Schulz, Galyn A., to American Can Company. Embossed paper toweling. 267,907, 2-8-83, Cl. D59-2.00B.
Schulz, Rainer R.: *See*—
 Parise, Carl; and Schulz, Rainer R., 267,906, Cl. D32-31.000.
Schwartz, James P.: *See*—
 Groenewold, Van D.; Christian, Hubert E.; and Schwartz, James P., 267,849, Cl. D7-6.000.
 Groenewold, Van D.; Christian, Hubert E.; and Schwartz, James P., 267,850, Cl. D7-6.000.
Siemens Aktiengesellschaft: *See*—
 Reese, Jens, 267,877, Cl. D14-94.000.
Singer Company, The: *See*—
 Current, Wayne A., 267,881, Cl. D15-68.000.
 Lenger, Sidney A., Jr., 267,839, Cl. D6-80.000.
 Lenger, Sidney A., Jr., 267,845, Cl. D6-154.000.
Smith, Jack R. Beverage dispensing container. 267,856, 2-8-83, Cl. D9-337.000.
Snyder, Terry E.: *See*—
 Astor, Barbara; and Snyder, Terry E., 267,857, Cl. D9-345.000.
Spates, Marian. Bottle. 267,858, 2-8-83, Cl. D9-373.000.
Stark, Ted, to M/M Verdi International, Inc. Luggage. 267,835, 2-8-83, Cl. D3-71.000.
Steelcase Inc.: *See*—
 Buhk, Randall P.; Hozeski, Kenneth W.; and Karrip, Alex, 267,838, Cl. D6-31.000.
Stevens, James P.: *See*—
 Boldt, Melvin H.; Stevens, James P.; and Wojtowicz, Chester J., 267,851, Cl. D7-351.000.
Stewart, Earl K.: *See*—
 Lenz, Henry G.; and Stewart, Earl K., 267,869, Cl. D13-1.000.
Sucato, Edward. Head cap for holding electrical probes and medical dispensers. 267,831, 2-8-83, Cl. D2-230.000.
Sundberg, Darrell W. Rack for appliances or the like. 267,843, 2-8-83, Cl. D6-132.000.
Susnjara, Kenneth J., to Thermwood Corporation. Industrial robot. 267,883, 2-8-83, Cl. D15-199.000.
Syroco, Inc.: *See*—
 Brescia, Anthony J.; and Rhoads, Spencer, 267,842, Cl. D6-131.000.
Takahashi, Yuichi: *See*—
 Nuttall, Michael W.; and Takahashi, Yuichi, 267,896, Cl. D21-161.000.
Thermwood Corporation: *See*—
 Susnjara, Kenneth J., 267,883, Cl. D15-199.000.
TIE/Communications, Inc.: *See*—
 Brown, Wilbert C.; and Saba, Philip B., 267,873, Cl. D14-60.000.
Tomy Kogyo Co., Inc.: *See*—
 Nuttall, Michael W.; and Takahashi, Yuichi, 267,896, Cl. D21-161.000.
Towle Manufacturing Company: *See*—
 England, Bert, 267,852, Cl. D7-137.000.
Uellenberg, Hans-Kurt; and Janke, Heinrich, to Ernst Leitz Wetzlar GmbH. Mirror reflex camera. 267,884, 2-8-83, Cl. D16-8.000.
U.S. Philips Corporation: *See*—
 Schouten, Henderikus P., 267,874, Cl. D14-73.000.
Watanabe, Toshiyuki. Mudguard for a vehicle, or similar article. 267,864, 2-8-83, Cl. D12-185.000.
Williams, Eunice C. Decal or similar article for a vehicle body. 267,888, 2-8-83, Cl. D20-11.000.
Wilson, Weldon D., to Eagle Aircraft Company. Agricultural spray airplane. 267,868, 2-8-83, Cl. D12-331.000.
Winter, Frank N. Combined tanks and supporting structure for water-blast apparatus. 267,882, 2-8-83, Cl. D15-126.000.
Witt, Frank H., Jr., to Levine, Rosalie S.; Bisacca, Mildred J.; and GRRN Company, a part interest. Flask or similar article. 267,854, 2-8-83, Cl. D9-307.000.
Wojtowicz, Chester J.: *See*—
 Boldt, Melvin H.; Stevens, James P.; and Wojtowicz, Chester J., 267,851, Cl. D7-351.000.
Yamamoto, Mituru: *See*—
 Kimura, Kazutaka; and Yamamoto, Mituru, 267,862, Cl. D12-110.000.
Yew, Tow S. Doctor's attache case. 267,834, 2-8-83, Cl. D3-74.000.
Zeldin, Sharon E. Game board. 267,893, 2-8-83, Cl. D21-33.000.

LIST OF PLANT PATENTEES

Chamberlin, Thomas O., Sr., to H. P. Metzler & Sons, Inc. Peach tree. 4,980, 2-8-83, Cl. 43.000.
Duffett, William E.: *See*—
 Jessel, Walter H., Jr.; and Duffett, William E., 4,981, Cl. 73.000.
H. P. Metzler & Sons. Inc.: *See*—
 Chamberlin, Thomas O., Sr., 4,980, Cl. 43.000.
Jessel, Walter H., Jr.; and Duffett, William E., to Yoder Brothers, Inc. Carnation plant. 4,981, 2-8-83, Cl. 73.000.
Yoder Brothers, Inc.: *See*—
 Jessel, Walter H., Jr.; and Duffett, William E., 4,981, Cl. 73.000.

CLASSIFICATION OF PATENTS

ISSUED FEBRUARY 8, 1983

NOTE.—First number, class; second number, subclass; third number, patent number

CLASS 2	
19	4,371,983
20	4,371,984
22	4,371,985
051	4,371,986
162	4,371,987
167	4,371,988
227	4,371,989
CLASS 3	
28	4,371,990
CLASS 4	
255	4,371,991
353	4,371,992
448	4,371,993
490	4,371,994
538	4,371,995
CLASS 5	
69	4,371,996
450	4,371,997
451	4,371,998
457	4,371,999
CLASS 6	
10	4,372,000
CLASS 8	
94.11	4,372,743
151	4,372,001
156	4,372,002
400	4,372,744
CLASS 15	
88	4,372,003
182	4,372,004
CLASS 16	
52	4,372,005
105	4,372,006
260	4,372,007
CLASS 17	
32	4,372,008
44.1	4,372,009
CLASS 19	
159 R	4,372,010
CLASS 24	
20 TT	4,372,011
68 R	4,372,012
144	4,372,013
201 C	4,372,014
221 R	4,372,015
241 PS	4,372,016
277	4,372,017
CLASS 27	
35	4,372,018
CLASS 29	
1.23	4,372,019
81 H	4,372,020
235	4,372,021
243.58	4,372,022
256	4,372,023
260	4,372,024
407	4,372,025
426.5	4,372,026
448	4,372,027
460	4,372,028
564.4	4,372,029
569 R	4,372,030
571	4,372,031
	4,372,032
	4,372,033
577 C	4,372,034
596	4,372,035
603	4,372,036
613	4,372,037
623.2	4,372,038
734	4,372,039
741	4,372,040
747	4,372,041
825	4,372,042
828	4,372,043
845	4,372,044
846	4,372,045
852	4,372,046
CLASS 30	
123.3	4,372,047
124	4,372,048
CLASS 33	
36	4,372,049
174 G	4,372,050
174 R	4,372,051
349	4,372,052
CLASS 34	
11	4,372,053
44	4,372,054
110	4,372,055
CLASS 36	
7.7	4,372,056
10	4,372,057
32 R	4,372,058
	4,372,059
54	4,372,060
117	4,372,061
120	4,372,062
CLASS 37	
2 R	4,372,063
117.5	4,372,064
CLASS 38	
15	4,372,065
CLASS 40	
124.1	4,372,066
360	4,372,067
367	4,372,068
490	4,372,069
595	4,372,070
624	4,372,071
CLASS 43	
21.2	4,372,072
57.1	4,372,073
69	4,372,074
CLASS 44	
1 D	4,372,749
1 R	4,372,750
2	4,372,751
50	4,372,752
52	4,372,753
CLASS 46	
1 K	4,372,075
20	4,372,076
116	4,372,077
150	4,372,078
CLASS 47	
33	4,372,079
57.6	4,372,080
CLASS 48	
77	4,372,754
197 R	4,372,755
202	4,372,756
CLASS 49	
8	4,372,081
62	4,372,082
462	4,372,083
477	4,372,084
CLASS 51	
216 ND	4,372,085
CLASS 52	
36	4,372,086
79.12	4,372,087
251	4,372,088
404	4,372,089
536	4,372,090
593	4,372,091
612	4,372,092
694	4,372,093
741	4,372,094
CLASS 53	
79	4,372,095
88	4,372,096
405	4,372,097
412	4,372,098
415	4,372,099
428	4,372,100
435	4,372,101
474	4,372,102
CLASS 55	
46	4,372,757
48	4,372,758
73	4,372,759
227	4,372,760
260	4,372,761
273	4,372,762
501	4,372,763
CLASS 56	
14.4	4,372,103
341	4,372,104
CLASS 57	
204	4,372,105
334	4,372,106
346	4,372,107
358	4,372,108
401	4,372,109
CLASS 60	
262	4,372,110
274	4,372,111
323	4,372,112
325	4,372,113
	4,372,114
520	4,372,115
525	4,372,116
562	4,372,117
583	4,372,118
600	4,372,119
605	4,372,120
606	4,372,121
634	4,372,122
639	4,372,123
648	4,372,124
660	4,372,125
669	4,372,126
CLASS 62	
6	4,372,127
	4,372,128
13	4,372,764
29	4,372,765
175	4,372,129
330	4,372,130
532	4,372,766
CLASS 63	
12	4,372,131
CLASS 65	
3.12	4,372,767
4.21	4,372,768
	4,372,769
27	4,372,770
75	4,372,771
106	4,372,772
108	4,372,773
114	4,372,774
CLASS 66	
84 A	4,372,132
120	4,372,133
CLASS 68	
12 R	4,372,134
22 R	4,372,135
CLASS 70	
14	4,372,136
41	4,372,137
56	4,372,138
383	4,372,139
CLASS 71	
67	4,372,775
90	4,372,776
93	4,372,777
94	4,372,778
CLASS 72	
53	4,372,140
131	4,372,141
319	4,372,142
343	4,372,143
352	4,372,144
387	4,372,145
453.13	4,372,146
CLASS 73	
3	4,372,147
4 R	4,372,148
24	4,372,149
40.5 A	4,372,151
40.5 R	4,372,150
81	4,372,152
84	4,372,153
104	4,372,154
114	4,372,155
119 R	4,372,156
147	4,372,157
	4,372,158
	4,372,159
178 R	4,372,160
432 R	4,372,161
517 B	4,372,162
602	4,372,163
704	4,372,164
861.22	4,372,165
861.28	4,372,166
	4,372,167
	4,372,168
861.52	4,372,169
861.61	4,372,170
861.66	4,372,171
862.39	4,372,172
862.59	4,372,173
863.11	4,372,174
864.17	4,372,175
CLASS 74	
409	4,372,176
501 M	4,372,177
512	4,372,178
579 E	4,372,179
606 R	4,372,180
CLASS 75	
0.5 R	4,372,779
14	4,372,780
65 ZM	4,372,781
118 R	4,372,782
246	4,372,783
CLASS 81	
57.39	4,372,181
177 N	Re.31,140
426	4,372,182
CLASS 83	
71	4,372,183
98	4,372,184
101	4,372,185
CLASS 84	
1.15	4,372,186
1.16	4,372,187
276	4,372,189
383 R	4,372,190
CLASS 87	
48	4,372,191
CLASS 89	
1.8	4,372,192
CLASS 91	
420	4,372,193
CLASS 92	
176	4,372,194
CLASS 98	
115 R	4,372,195
116	4,372,196
118	4,372,197
CLASS 99	
340	4,372,198
341	4,372,199
404	4,372,200
CLASS 100	
7	4,372,201
53	4,372,202
CLASS 101	
124	4,372,203
145	4,372,204
153	4,372,205
228	4,372,206
365	4,372,207
366	4,372,208
409	4,372,209
CLASS 102	
204	4,372,210
207	4,372,211
264	4,372,212
301	4,372,213
305	4,372,214
387	4,372,215
489	4,372,216
521	4,372,217
CLASS 104	
88	4,372,218
165	4,372,219
CLASS 105	
215 C	4,372,220
CLASS 106	
100	4,372,784
170	4,372,785
900	4,372,786
CLASS 108	
51.3	4,372,221
137	4,372,222
143	4,372,223
159	4,372,224
CLASS 109	
19	4,372,225
CLASS 110	
238	4,372,226
342	4,372,227
347	4,372,228
CLASS 111	
86	4,372,229
CLASS 112	
139	4,372,230
158 B	4,372,231
158 E	4,372,232
235	4,372,233
258	4,372,234
273	4,372,235
291	4,372,236
308	4,372,237
439	4,372,238
CLASS 114	
20 A	4,372,239
56	4,372,240
162	4,372,241
222	4,372,242
244	4,372,359
364	4,372,243
CLASS 118	
46	4,372,244
56	4,372,245
60	4,372,246
116	4,372,247
720	4,372,248
CLASS 119	
14.17	4,372,249
14.47	4,372,250
16	4,372,251
51 R	4,372,252
CLASS 122	
7 R	4,372,253
26	4,372,254
149	4,372,255
CLASS 123	
23	4,372,256
68	4,372,257
73 AD	4,372,258
79 R	4,372,259
142.5 E	4,372,260
	4,372,261
179 J	4,372,262
179 SE	4,372,263
255	4,372,264
352	4,372,265
357	4,372,266
366	4,372,267
383	4,372,268
436	4,372,269
440	4,372,270
445	4,372,271
467	4,372,272
490	4,372,273
491	4,372,274
522	4,372,275
525	4,372,276
557	4,372,278
	4,372,279
	4,372,280
571	4,372,277
CLASS 124	
16	4,372,281
24 R	4,372,282
56	4,372,283
78	4,372,284
90	4,372,285
CLASS 126	
77	4,372,286
79	4,372,287
143	4,372,288
292	4,372,289
355	4,372,290
443	4,372,291
450	4,372,292
CLASS 128	
1 R	4,372,293
1.1	4,372,294
4	4,372,295
24 A	4,372,296
64	4,372,297
80 A	4,372,299
80 C	4,372,298
83	4,372,300
94	4,372,301
130	4,372,302
132 D	4,372,303
214 B	4,372,305
214 E	4,372,304
214 G	4,372,306
224	4,372,307
283	4,372,308
284	4,372,309
	4,372,310
287	4,372,311
290 R	4,372,312
295	4,372,313
296	4,372,314
303.18	4,372,315
325	4,372,316
330	4,372,317
403	4,372,318
421	4,372,319
455	4,372,320
463	4,372,321
491	4,372,322
660	4,372,323
695	4,372,324
763	4,372,325
CLASS 131	
84 B	4,372,326
95	4,372,327
332	4,372,328
CLASS 132	
40	4,372,329
53	4,372,330
88.7	4,372,331
CLASS 134	
1	4,372,787
4	4,372,788
CLASS 137	
1	4,372,332
	4,372,333
12	4,372,334
101	4,372,335
205	4,372,336
240	4,372,337
	4,372,338
288	4,372,339
576	4,372,340
580	4,372,341
601	4,372,342
614.2	4,372,343
615	4,372,344
636	4,372,345
CLASS 139	
353	4,372,346
420 C	4,372,347
435	4,372,348
452	4,372,349
CLASS 140	
112	4,372,350
	4,372,351

CLASSIFICATION OF PATENTS

CLASS 141
1 4,372,352
206 4,372,353
361 4,372,354

CLASS 142
55 4,372,355
56 4,372,356

CLASS 144
114 R 4,372,357
117 R 4,372,358

CLASS 145
2 R 4,372,360
61 R 4,372,361
63 4,372,362

CLASS 148
3 4,372,789
16.5 4,372,790
171 4,372,791

CLASS 150
4 4,372,363
52 R 4,372,364

CLASS 152
158 4,372,365

CLASS 156
48 4,372,792
66 4,372,793
73.1 4,372,794
155 4,372,795
187 4,372,796
249 4,372,797
273.1 4,372,798
285 4,372,799
307.3 4,372,800
434 4,372,801
538 4,372,802
626 4,372,803
631 4,372,804
642 4,372,805
643 4,372,806
4,372,807
655 4,372,808
656 4,372,809

CLASS 157
13 4,372,366

CLASS 160
310 4,372,367

CLASS 162
23 4,372,810
38 4,372,811
40 4,372,812
48 4,372,813
124 4,372,814
158 4,372,815
343 4,372,816

CLASS 164
332 4,372,368
482 4,372,369

CLASS 165
8 4,372,370
9 4,372,371
47 4,372,372
54 4,372,373
70 4,372,374
4,372,375
104.12 4,372,376
104.26 4,372,377

CLASS 166
57 4,372,378
68.5 4,372,379
250 4,372,380
263 4,372,381
264 4,372,382
266 4,372,383
278 4,372,384
281 4,372,385
300 4,372,386
334 4,372,387
4,372,388
369 4,372,389
373 4,372,390
4,372,391
4,372,392
382 4,372,393

CLASS 169
30 4,372,394
69 4,372,395

CLASS 172
1 4,372,396
42 4,372,397

CLASS 174
48 4,373,111
65 R 4,373,112
179 4,373,113

CLASS 175
45 4,372,398
65 4,372,399
107 4,372,400
209 4,372,401
318 4,372,402
343 4,372,403
374 4,372,404

CLASS 177
25 4,372,405
212 4,372,406

CLASS 178
17 D 4,373,114

CLASS 179
1 GS 4,373,115
1 SM 4,373,116
2 DP 4,373,117
77 4,373,118
99 LS Re.31,144
110 A 4,373,119
175 4,373,120
175.3 F 4,373,121

CLASS 180
6.2 4,372,407
4,372,408
54 A 4,372,409
89.12 4,372,410
89.15 4,372,411
90 4,372,412
152 4,372,413
165 4,372,414
215 4,372,415
4,372,416
4,372,417
256 4,372,418
289 4,372,419

CLASS 181
120 4,372,420
243 4,372,421

CLASS 182
5 4,372,422
42 4,372,423
119 4,372,424
179 4,372,425

CLASS 187
1 R 4,372,426

CLASS 188
72.1 4,372,427
73.35 4,372,428
322.12 4,372,429
329 4,372,430
380 4,372,431

CLASS 192
8 C 4,372,432
18 R 4,372,433
85 AA 4,372,434

CLASS 198
356 4,372,435
377 4,372,436
380 4,372,437
459 4,372,438
470 4,372,439
728 4,372,440
781 4,372,441
790 4,372,442

CLASS 200
159 A 4,373,123
159 B 4,373,122
4,373,124

CLASS 202
83 4,372,818
239 4,372,819
248 4,372,820
263 4,372,821

CLASS 203
19 4,372,822

CLASS 204
2.1 4,372,823
25 4,372,824
27 4,372,825
43 T 4,372,826
95 4,372,827
103 4,372,828
109 4,372,829
110 4,372,830
129.8 4,372,831
157.1 R 4,372,832
4,372,833
4,372,834
159.13 4,372,835
159.23 4,372,836
186 4,372,837

CLASS 206
264 4,372,443
505 4,372,444
532 4,372,445
586 4,372,446
812 4,372,447

CLASS 208
10 4,372,838
59 4,372,839
113 4,372,840
4,372,841
254 H 4,372,842

CLASS 209
12 4,372,843
166 4,372,844
211 4,372,845

CLASS 210
86 4,372,846
4,372,847
90 4,372,848
167 4,372,849
198.3 4,372,850
199 4,372,851
222 4,372,852
232 4,372,853
242.3 4,372,854
316 4,372,855
603 4,372,856
673 4,372,857
674 4,372,858
739 4,372,859
748 4,372,860

CLASS 211
41 4,372,448
86 4,372,449
87 4,372,450
187 4,372,451

CLASS 212
159 4,372,452

CLASS 215
13 R 4,372,453
100 A 4,372,454
4,372,455
228 4,372,457
252 4,372,456

CLASS 219
60 A 4,373,125
69 E 4,373,127
69 M 4,373,126
73.11 4,373,128
79 4,373,129
203 4,373,130
216 4,373,131
421 4,373,132

CLASS 220
71 4,372,458
76 4,372,459
258 4,372,460
260 4,372,461
269 4,372,462

CLASS 221
10 4,372,463
14 4,372,464
131 4,372,465

CLASS 222
482 4,372,466
501 4,372,467

CLASS 224
268 4,372,468
321 4,372,469
324 4,372,470

CLASS 225
1 4,372,471
80 4,372,472

CLASS 227
3 4,372,473

CLASS 228
29 4,372,474
170 4,372,475

CLASS 229
16 A 4,372,476
39 R 4,372,477

CLASS 232
12 4,372,478
15 4,372,479
28 4,372,480
34 4,372,481
36 4,372,482

CLASS 235
383 4,373,133
386 4,373,134

CLASS 236
1 G 4,372,485
92 B 4,372,486

CLASS 237
56 4,372,487

CLASS 238
8 4,372,488
10 F 4,372,489

CLASS 239
59 4,372,490
102 4,372,491
168 4,372,492
208 4,372,493
553.3 4,372,494

CLASS 241
28 4,372,495
37 4,372,496

CLASS 242
7.03 4,372,497
47.01 4,372,498
50 4,372,499
55 4,372,500
107 4,372,501
149 4,372,502
183 4,372,503
198 4,372,504

CLASS 244
53 B 4,372,505
100 R 4,372,506
113 4,372,507
122 AG 4,372,508

CLASS 248
27.1 4,372,509
58 4,372,510
68 R 4,372,511
97 4,372,512
146 4,372,513
163 R 4,372,514
178 4,372,515
235 4,372,516
267 4,372,517
270 Re.31,141
430 4,372,521
441 R 4,372,518
466 4,372,519
604 4,372,520

CLASS 249
18 4,372,522
79 4,372,523
4,372,524
102 4,372,525
119 4,372,526

CLASS 250
339 4,373,136
343 4,373,137
343 B1 4,251,727

CLASS 251
1 A 4,372,527
4 4,372,528
151 4,372,529
173 4,372,530
174 4,372,531
175 4,372,532

CLASS 252
29 4,372,861
33 4,372,862
51.5 A 4,372,863
61 4,372,864
62.62 4,372,865
70 4,372,866
91 4,372,867
102 4,372,868
174.16 4,372,869
180 4,372,870
299.61 4,372,871
313 R 4,372,872
389 R 4,372,873
413 4,372,875
430 4,372,876
455 Z 4,372,878
470 4,372,879
522 R 4,372,880
4,372,881
529 4,372,882

CLASS 254
93 HP 4,372,533
269 4,372,534
319 4,372,535

CLASS 256
64 4,372,536

CLASS 260
112 R 4,372,883
112.5 S 4,372,884
158 4,372,885
165 4,372,886
397.1 4,372,888
413 4,372,889
429 R 4,372,890
453 RZ 4,372,877
453 SP 4,372,891
458 C 4,372,892
465 E 4,372,893
941 4,372,894

CLASS 261
92 4,372,895
121 B 4,372,896
153 4,372,897

CLASS 264
22 4,372,898
25 4,372,899
45.3 4,372,900
46.5 4,372,901
65 4,372,902
109 4,372,903
134 4,372,904
249 4,372,905
256 4,372,906
265 4,372,907
292 4,372,908
521 4,372,909
532 4,372,910

CLASS 266
45 4,372,537
69 4,372,538
104 4,372,539
171 4,372,540
220 4,372,541
229 4,372,542
275 4,372,543
281 4,372,544

CLASS 267
8 R 4,372,545
100 4,372,546

CLASS 271
10 4,372,547
18.3 4,372,548
23 4,372,549
211 4,372,550

CLASS 272
112 4,372,552
119 4,372,553

CLASS 273
1 E 4,372,554
1.5 R 4,372,555
85 G 4,372,556
88 4,372,557
238 4,372,558
243 4,372,559
408 4,372,560
411 4,372,561

CLASS 277
34 4,372,562
117 4,372,563
235 B 4,372,564
236 4,372,565

CLASS 280
11.19 4,372,566
21 R 4,372,567
63 4,372,568
78 4,372,569
154.5 R 4,372,570
423 A 4,372,571
423 B 4,372,572
477 4,372,573
634 4,372,574
661 4,372,575
689 4,372,576
780 4,372,577
802 4,372,578
4,372,579
4,372,580

CLASS 282
27.5 4,372,581
4,372,582
4,372,583

CLASS 285
18 4,372,584
43 4,372,585
178 4,372,586
238 4,372,587

CLASS 289
8 4,372,588
13 4,372,589

CLASS 292
33 4,372,590
221 4,372,591
288 4,372,592
307 B 4,372,593
337 4,372,594

CLASS 293
131 4,372,595

CLASS 294
9 4,372,596
67 DA 4,372,597
87.2 4,372,598
4,372,599
4,372,600

CLASS 296
50 4,372,601
78 R 4,372,602
146 4,372,603

CLASS 297
162 4,372,604
192 4,372,605
265 4,372,606
325 4,372,607
361 4,372,608
362 4,372,609
367 4,372,610
371 4,372,611
374 4,372,612
481 4,372,613

CLASS 298
17 B 4,372,614

CLASS 299
2 4,372,615
5 4,372,616
24 4,372,617
31 4,372,618
43 4,372,619

CLASS 303
99 4,372,620

CLASS 307
277 4,373,138
350 4,373,139
351 4,373,140
4,373,141
608 Re.31,145

CLASS 308
2 R 4,372,621
4 A 4,372,622
6 C 4,372,623
187.1 4,372,628

CLASS 310
306 4,373,142
334 4,373,143

CLASS 312
223 4,372,629
231 4,372,630
4,372,631
311 4,372,632

CLASS 313
338 4,373,144
503 4,373,145

CLASS 315
209 R 4,373,146
276 Re.31,146

CLASS 318
48 4,373,147
254 4,373,148
281 4,373,149
336 4,373,150

CLASS 329
104 4,373,151

CLASS 339
5 M 4,372,633
17 C 4,372,634
45 M 4,372,635
74 R Re.31,142
237 4,372,636
244 R 4,372,637
273 F 4,372,638

CLASS 340
87 4,373,153
347 DD 4,373,152
4,373,154
623 4,373,155
703 4,373,156
805 4,373,157
825.3 4,373,158

CLASS 343
6.5 R 4,373,159
100 SA 4,373,160
717 4,373,161
771 4,373,162
842 4,373,163

CLASS 346
75 4,373,164

CLASS 350
3.7 4,372,639
6.3 4,372,640
96.12 4,372,641
4,372,642
96.14 4,372,643
96.20 4,372,644
96.30 4,372,645
96.31 4,372,646
96.33 4,372,647
4,372,648
162 SF 4,372,649
252 4,372,650
292 4,372,651
319 4,372,652
385 4,372,653
427 4,372,654

CLASS 351
206 4,372,655

CLASS 352
57 4,372,656

CLASS 354
53 4,372,657
63 4,372,658
80 4,372,659
180 4,372,660
204 4,372,661
273 4,372,662
286 4,372,663
288 4,372,664
298 4,372,665
4,372,666

CLASS 355
1 4,372,667
3 R 4,372,668
4,372,669
8 4,372,670
4,372,671
14 C 4,372,676
14 D 4,372,674
14 FU 4,372,675
14 R 4,372,672
4,372,673
37 4,372,678
41 4,372,677
70 4,372,679

CLASS 356
51 4,372,680
72 4,372,681
244 4,372,682
338 4,372,683
348 4,372,684
350 4,372,685
381 Re.31,143

CLASS 357
13 4,373,165
15 4,373,166
24 4,373,167

CLASS 358
19 4,373,168
104 4,373,169

CLASS 360
71 4,373,170
4,373,171
105 4,373,172
121 4,373,173

CLASS 361
42 Re.31,147
149 4,373,174
220 4,373,175
433 4,373,176
433 A 4,373,177

CLASS 362
280 4,373,178

CLASS 364
200 4,373,179
4,373,180
4,373,181
4,373,182
4,373,183
431.06 4,373,187
434 4,373,184
478 4,373,185
551 4,373,186
552 4,373,188
602 4,373,189
715 4,373,190
724 4,373,191
900 4,373,192
4,373,193
4,373,194

CLASS 365
154 4,373,195
189 4,373,196

CLASS 366
220 4,372,686

CLASS 367
36 4,373,197
37 4,373,198

CLASS 368
28 4,372,687
65 4,372,688
155 4,372,689

CLASS 369
31 4,373,199
263 4,373,200

CLASS 371
68 4,373,201

CLASS 372
64 4,373,202

CLASS 374
29 4,372,690
44 4,372,691
104 4,372,692
111 4,372,693

CLASS 375
10 4,373,203
120 4,373,204

CLASS 376
349 4,372,911
381 4,372,912
417 4,372,817

CLASS 377
8 4,373,135

CLASS 384
94 4,372,624
129 4,372,625
4,372,626
260 4,372,627

CLASS 400
88 4,372,694
119 4,372,695
124 4,372,696
232 4,372,697
320 4,372,698
625 4,372,699

CLASS 401
157 4,372,700

CLASS 403
24 4,372,701
4,372,702
324 4,372,703

CLASS 405
19 4,372,705
195 4,372,706
224 4,372,707
225 4,372,704
261 4,372,708
282 4,372,709

CLASS 406
28 4,372,710
63 4,372,711
153 4,372,712
172 4,372,713

CLASS 409
293 4,372,714

CLASS 410
79 4,372,715
134 4,372,716
154 4,372,717

CLASS 411
366 4,372,718

CLASS 413
9 4,372,719
56 4,372,720

CLASS 414
5 4,372,721
44 4,372,722
111 4,372,723
281 4,372,724
460 4,372,725
517 4,372,726
537 4,372,727
590 4,372,728
700 4,372,729
786 4,372,730

CLASS 415
166 4,372,731

CLASS 416
14 4,372,732

CLASS 422
16 4,372,913
46 4,372,914
91 4,372,915
111 4,372,916
116 4,372,917
129 4,372,918
137 4,372,919
148 4,372,920
300 4,372,921

CLASS 423
112 4,372,922
4,372,923
179 4,372,924
226 4,372,925
244 4,372,926
4,372,927
249 4,372,928
323 4,372,929
326 4,372,930
329 4,372,931
351 4,372,932
365 4,372,933
4,372,934
393 4,372,935
450 4,372,936
454 4,372,937
469 4,372,938
478 4,372,939
567 A 4,372,940

CLASS 424
1 4,372,941
16 4,372,942
78 4,372,943
83 4,372,944
92 4,372,945
114 4,372,946
121 4,372,947
180 4,372,948
199 4,372,949
239 4,372,951
246 4,372,952
248.5 4,372,953
248.53 4,372,954
250 4,372,955
251 4,372,956
4,372,957
253 4,372,958
4,372,959
267 4,372,960
4,372,961
272 4,372,962
4,372,963
273 R 4,372,964
274 4,372,965
4,372,966
279 4,372,967
280 4,372,968
282 4,372,969
4,372,970
285 4,372,971
304 4,372,972
305 4,372,973
319 4,372,974
324 4,372,975
331 4,372,976
342 4,372,977
343 4,372,978

CLASS 425
60 4,372,733
131.1 4,372,734
135 4,372,735
149 4,372,736
393 4,372,737
451.9 4,372,738
466 4,372,739
544 4,372,740
556 4,372,741

CLASS 426
36 4,372,979
231 4,372,980
235 4,372,981
549 4,372,982
582 4,372,983
637 4,372,984

CLASS 427
38 4,372,985
40 4,372,986
42 4,372,987
52 4,372,988
53.1 4,372,989
4,372,990
140 4,372,991
185 4,372,992
193 4,372,993
195 4,372,994
300 4,372,995
328 4,372,996

CLASS 428
144 4,372,997
193 4,372,998
4,372,999
198 4,373,000
212 4,373,001
213 4,373,002
241 4,373,003
328 4,373,004
357 4,373,005
368 4,373,006
412 4,373,007
413 4,373,008
424.2 4,373,009
532 4,373,010
537 4,373,011
558 4,373,012
570 4,373,013

CLASS 429
13 4,373,014
57 4,373,015

CLASS 430
126 4,373,016
270 4,373,017
312 4,373,018
317 4,373,019
339 4,373,020
374 4,373,021
434 4,373,022

CLASS 434
199 4,372,742

CLASS 435
2 4,373,023
41 4,373,024
94 4,373,025
191 4,373,026
240 4,373,027
253 4,373,028
286 4,373,029

CLASS 436
66 4,372,746
67 4,372,747
73 4,372,748
176 4,372,874
537 4,372,745

CLASS 455
86 4,373,205
103 4,373,206
139 4,373,207
186 4,373,208
208 4,373,209
273 4,373,210

CLASS 494
14 4,372,484
16 4,372,483

CLASS 501
152 4,373,030

CLASS 521
32 4,373,031
38 4,373,032
70 4,373,033
177 4,373,034

CLASS 523
113 4,373,035
120 4,373,036
155 4,373,037
156 4,373,038
205 4,373,039
466 4,373,040

CLASS 524
77 4,373,041
100 4,373,042
130 4,373,043
132 4,373,044
141 4,373,045
285 4,373,046
371 4,373,047
4,373,048
375 4,373,049
405 4,373,050
427 4,373,051
451 4,373,052
457 4,373,053
460 4,373,054
505 4,373,055
547 4,373,056
700 4,373,057
705 4,373,058
761 4,373,059
767 4,373,060
4,373,061
841 4,373,062

CLASS 525
64 4,373,063
68 4,373,064
132 4,373,065
133 4,373,066
146 4,373,067
218 4,373,068
237 4,373,069
332.2 4,373,070
375 4,373,071
438 4,373,072
507 4,373,073

CLASS 526
92 4,373,074
230.5 4,373,075
261 4,373,076
309 4,373,077
317 4,373,078

CLASS 528
9 4,373,079
45 4,373,080
4,373,081
60 4,373,082
67 4,373,083
79 4,373,084
291 4,373,085
322 4,373,086
337 4,373,087
338 4,373,088
353 4,373,089
387 4,373,090
481 4,373,091
4,373,092
491 4,373,093

CLASS 536
6.4 4,373,094
7.1 4,373,095
20 4,373,096
26 4,373,097
101 4,373,098
105 4,373,099

CLASS 542
439 4,373,100
440 4,373,101

CLASS 544
143 4,373,102
195 4,373,103

CLASS 546
145 4,373,104

CLASS 548
468 4,372,887

CLASS 560
27 4,373,105

CLASS 564
85 4,373,106
473 4,373,107

CLASS 568
817 4,373,108

CLASS 585
640 4,373,109
719 4,373,110

CLASS 972
73 4,372,551

CLASSIFICATION OF DESIGNS

D2— 82 267,830
230 267,831
271 267,832
407 267,833
D3— 71 267,835
74 267,834
78 267,836
D6— 27 267,837
31 267,838
80 267,839
99 267,840
130 267,841
131 267,842
132 267,843
136 267,844
154 267,845
161 267,846
188 267,847
D7— 3 267,848
6 267,849
267,850
137 267,852
351 267,851
D8— 51 267,853
D9— 307 267,854
337 267,856
345 267,857
373 267,858
434 267,855
D10— 31 267,859
32 267,860
39 267,861
D12— 110 267,862
129 267,863
185 267,864
267,865
311 267,866
317 267,867
331 267,868
D13— 1 267,869
35 267,870
36 267,871
D14— 53 267,872
60 267,873
73 267,874
79 267,875
90 267,876
94 267,877
267,878
100 267,879
113 267,880
D15— 68 267,881
126 267,882
199 267,883
D16— 8 267,884
D17— 24 267,885
D19— 43 267,886
49 267,887
D20— 11 267,888
41 267,889
267,890
D21— 2 267,891
16 267,892
33 267,893
102 267,894
105 267,895
161 267,896
D23— 92 267,897
148 267,898
D26— 40 267,899
83 267,900
D27— 08 267,901
D28— 11 267,902
79 267,903
D30— 1 267,904
267,905
D32— 31 267,906
D59— 2 B 267,907

CLASSIFICATION OF PLANTS

P.— 43 4,980
73 4,981

GEOGRAPHICAL INDEX OF RESIDENCE OF INVENTORS

(U.S. States, Territories and Armed Forces, the Commonwealth of Puerto Rico, and the Canal Zone)

Alabama	1	Kentucky	21	Oregon	41
Alaska	2	Louisiana	22	Pennsylvania	42
American Samoa	3	Maine	23	Puerto Rico	43
Arizona	4	Maryland	24	Rhode Island	44
Arkansas	5	Massachusetts	25	South Carolina	45
California	6	Michigan	26	South Dakota	46
Canal Zone	7	Minnesota	27	Tennessee	47
Colorado	8	Mississippi	28	Texas	48
Connecticut	9	Missouri	29	Utah	49
Delaware	10	Montana	30	Vermont	50
District of Columbia	11	Nebraska	31	Virginia	51
Florida	12	Nevada	32	Virgin Islands	52
Georgia	13	New Hampshire	33	Washington	53
Guam	14	New Jersey	34	West Virginia	54
Hawaii	15	New Mexico	35	Wisconsin	55
Idaho	16	New York	36	Wyoming	56
Illinois	17	North Carolina	37	U.S. Air Force	57
Indiana	18	North Dakota	38	U.S. Army	58
Iowa	19	Ohio	39	U.S. Navy	59
Kansas	20	Oklahoma	40		

(First number in listing denotes location according to above key. Refer to patent number in body of the Official Gazette to obtain details as to inventor name, location, etc.)

PATENTS

8 : 4,373,193
01 : 4,372,028
4,372,192
4,372,216
4,372,252
4,372,812
4,372,929
4,373,117
04 : 4,371,994
4,372,068
4,372,182
4,372,278
4,372,633
4,372,636
4,373,152
4,373,173
4,373,183
4,373,191
05 : 4,372,422
06 : 4,371,984
4,371,985
4,371,989
4,371,995
4,371,999
4,372,007
4,372,013
4,372,015
4,372,023
4,372,032
4,372,036
4,372,037
4,372,060
4,372,063
4,372,070
4,372,071
4,372,074
4,372,076
4,372,078
4,372,110
4,372,123
4,372,129
4,372,138
4,372,144
4,372,147
4,372,150
4,372,162
4,372,163
4,372,166
4,372,167
4,372,168
4,372,169
4,372,186
4,372,187

4,372,195
4,372,200
4,372,212
4,372,239
4,372,248
4,372,279
4,372,298
4,372,305
4,372,307
4,372,317
4,372,359
4,372,363
4,372,386
4,372,423
4,372,435
4,372,452
4,372,468
4,372,474
4,372,483
4,372,506
4,372,517
4,372,520
4,372,550
4,372,556
4,372,557
4,372,566
4,372,593
4,372,594
4,372,605
4,372,617
4,372,622
4,372,624
4,372,632
4,372,638
4,372,639
4,372,646
4,372,681
4,372,683
4,372,684
4,372,688
4,372,690
4,372,693
4,372,707
4,372,715
4,372,717
4,372,722
4,372,731
4,372,733
4,372,741
4,372,743
4,372,751
4,372,753
4,372,768

4,372,786
4,372,796
4,372,801
4,372,803
4,372,808
4,372,817
4,372,838
4,372,847
4,372,852
4,372,872
4,372,874
4,372,877
4,372,884
4,372,914
4,372,915
4,372,921
4,372,932
4,372,943
4,372,981
4,372,985
4,373,009
4,373,011
4,373,039
4,373,057
4,373,067
4,373,071
4,373,079
4,373,092
4,373,109
4,373,125
4,373,182
4,373,197
4,373,198
4,373,202
08 : 4,372,102
4,372,543
4,372,615
4,372,671
4,372,672
4,372,755
4,372,823
4,373,118
09 : Re.31,143
4,372,016
4,372,091
4,372,175
4,372,247
4,372,318
4,372,320
4,372,352
4,372,361
4,372,432

4,372,454
4,372,487
4,372,496
4,372,691
4,372,736
4,372,759
4,372,767
4,373,006
4,373,014
4,373,143
10 : 4,372,243
4,372,778
4,372,848
4,373,049
4,373,084
4,373,098
11 : 4,372,291
12 : Re.31,141
4,372,018
4,372,024
4,372,042
4,372,059
4,372,064
4,372,145
4,372,219
4,372,241
4,372,263
4,372,285
4,372,299
4,372,354
4,372,465
4,372,513
4,372,585
4,372,725
4,372,825
4,372,843
4,372,941
4,373,058
4,373,119
4,373,129
4,373,141
4,373,148
4,373,155
4,373,181
13 : 4,372,001
4,372,069
4,372,105
4,372,314
4,372,321
4,372,364
4,372,476
4,372,512
4,372,539

4,372,542
4,372,600
4,372,601
4,372,631
4,372,833
16 : 4,372,184
4,372,260
17 : Re.31,147
4,371,986
4,372,006
4,372,008
4,372,073
4,372,097
4,372,100
4,372,118
4,372,146
4,372,156
4,372,193
4,372,288
4,372,289
4,372,297
4,372,300
4,372,303
4,372,306
4,372,313
4,372,340
4,372,344
4,372,376
4,372,397
4,372,408
4,372,410
4,372,429
4,372,446
4,372,451
4,372,455
4,372,459
4,372,462
4,372,478
4,372,479
4,372,503
4,372,516
4,372,519
4,372,572
4,372,590
4,372,611
4,372,658
4,372,716
4,372,720
4,372,766
4,372,798
4,372,814
4,372,832
4,372,856

4,372,861
4,372,876
4,372,991
4,372,995
4,373,025
4,373,114
4,373,123
4,373,135
4,373,156
18 : 4,372,113
4,372,154
4,372,229
4,372,269
4,372,355
4,372,356
4,372,514
4,372,531
4,372,604
4,372,887
4,372,903
4,372,944
4,373,047
19 : 4,372,009
4,372,099
4,372,339
4,372,366
4,372,573
4,372,851
4,373,099
20 : 4,372,198
4,372,330
4,372,453
21 : 4,372,139
4,372,697
4,372,699
4,372,730
22 : 4,372,026
4,372,180
4,372,333
4,372,338
4,372,553
4,372,596
4,372,705
4,372,757
4,372,840
4,372,841
4,372,924
4,373,005
23 : 4,373,001
24 : 4,372,211
4,372,213
4,372,214
4,372,217

4,372,268
4,372,287
4,372,329
4,372,888
4,372,992
4,373,035
4,373,189
4,373,190
25 : 4,372,038
4,372,054
4,372,086
4,372,095
4,372,128
4,372,141
4,372,164
4,372,254
4,372,294
4,372,304
4,372,369
4,372,464
4,372,511
4,372,546
4,372,559
4,372,587
4,372,652
4,372,679
4,372,747
4,372,769
4,372,791
4,372,917
4,372,945
4,372,996
4,373,023
4,373,031
4,373,040
4,373,146
4,373,163
4,373,176
4,373,177
4,373,178
4,373,207
26 : 4,372,066
4,372,112
4,372,120
4,372,122
4,372,142
4,372,155
4,372,202
4,372,261
4,372,265
4,372,271
4,372,272
4,372,374
4,372,409
4,372,421
4,372,430
4,372,469
4,372,480
4,372,481
4,372,568
4,372,575
4,372,603
4,372,610
4,372,612
4,372,629
4,372,718
4,372,738
4,372,748
4,372,855
4,372,900
4,372,960
4,372,966
4,373,134
4,373,145
4,373,186
27 : Re.31,145
4,371,997
4,372,040
4,372,136
4,372,251
4,372,345
4,372,441

4,372,460
4,372,567
4,372,582
4,372,635
4,372,649
4,372,665
4,372,666
4,372,729
4,372,867
4,372,982
4,372,997
4,373,020
4,373,077
4,373,127
4,373,147
4,373,162
4,373,175
4,373,201
28 : 4,372,022
4,372,035
29 : 4,372,025
4,372,290
4,372,296
4,372,336
4,372,492
4,372,630
4,372,775
4,372,777
31 : 4,372,445
4,372,536
4,372,561
32 : Re.31,140
33 : 4,372,116
4,372,325
4,372,540
4,372,732
4,372,735
4,373,210
34 : 4,372,048
4,372,072
4,372,075
4,372,098
4,372,126
4,372,227
4,372,231
4,372,232
4,372,233
4,372,234
4,372,237
4,372,283
4,372,311
4,372,322
4,372,447
4,372,450
4,372,461
4,372,500
4,372,502
4,372,535
4,372,554
4,372,591
4,372,641
4,372,643
4,372,645
4,372,703
4,372,745
4,372,750
4,372,760
4,372,771
4,372,788
4,372,806
4,372,807
4,372,820
4,372,830
4,372,834
4,372,839
4,372,857
4,372,863
4,372,869
4,372,889
4,372,913
4,372,942

4,372,965
4,372,974
4,372,977
4,372,988
4,373,007
4,373,018
4,373,032
4,373,036
4,373,037
4,373,095
4,373,121
4,373,138
4,373,157
4,373,204
35 : 4,372,378
36 : Re.31,144
4,371,992
4,372,000
4,372,050
4,372,055
4,372,057
4,372,062
4,372,111
4,372,115
4,372,125
4,372,238
4,372,246
4,372,264
4,372,316
4,372,343
4,372,370
4,372,371
4,372,398
4,372,419
4,372,448
4,372,467
4,372,495
4,372,551
4,372,597
4,372,627
4,372,656
4,372,668
4,372,669
4,372,670
4,372,675
4,372,677
4,372,742
4,372,822
4,372,835
4,372,976
4,373,021
4,373,045
4,373,052
4,373,055
4,373,060
4,373,061
4,373,064
4,373,065
4,373,103
4,373,115
4,373,120
4,373,131
4,373,140
4,373,158
37 : 4,372,029
4,372,079
4,372,171
4,372,222
4,372,236
4,372,351
4,372,555
4,372,637
4,372,737
4,372,957
39 : 4,371,991
4,372,033
4,372,039
4,372,051
4,372,053
4,372,190
4,372,199
4,372,353

4,372,377
4,372,449
4,372,507
4,372,533
4,372,583
4,372,653
4,372,696
4,372,713
4,372,721
4,372,763
4,372,773
4,372,789
4,372,794
4,372,910
4,372,933
4,372,934
4,372,951
4,373,051
4,373,068
4,373,075
4,373,082
4,373,093
4,373,142
40 : 4,371,993
4,372,014
4,372,196
4,372,197
4,372,282
4,372,331
4,372,380
4,372,387
4,372,388
4,372,391
4,372,392
4,372,562
4,372,704
4,372,787
4,372,842
4,372,844
4,372,901
4,372,937
4,373,024
4,373,041
4,373,090
4,373,091
4,373,110
41 : 4,371,998
4,372,034
4,372,058
4,372,324
4,372,414
4,372,560
4,372,569
4,372,815
4,372,993
4,373,062
42 : 4,371,983
4,372,005
4,372,020
4,372,043
4,372,056
4,372,103
4,372,124
4,372,130
4,372,131
4,372,132
4,372,191
4,372,210
4,372,228
4,372,286
4,372,292
4,372,315
4,372,334
4,372,342
4,372,360
4,372,405
4,372,411
4,372,425
4,372,431
4,372,437
4,372,442
4,372,463

4,372,472
4,372,485
4,372,508
4,372,510
4,372,525
4,372,528
4,372,544
4,372,606
4,372,620
4,372,625
4,372,626
4,372,634
4,372,700
4,372,712
4,372,726
4,372,770
4,372,819
4,372,828
4,372,864
4,372,865
4,372,870
4,372,916
4,372,931
4,372,964
4,372,972
4,372,978
4,373,008
4,373,010
4,373,048
4,373,050
4,373,083
4,373,132
4,373,159
4,373,169
4,373,180
43 : 4,372,906
44 : 4,372,530
45 : 4,372,004
4,372,107
4,372,114
4,372,310
4,372,358
46 : 4,372,727
47 : 4,372,017
4,372,081
4,372,157
4,372,176
4,372,372
4,372,595
4,372,756
4,372,829
48 : 4,371,987
4,372,002
4,372,003
4,372,027
4,372,031
4,372,049
4,372,080
4,372,170
4,372,181
4,372,221
4,372,240
4,372,280
4,372,284
4,372,293
4,372,301
4,372,332
4,372,381
4,372,382
4,372,384
4,372,390
4,372,393
4,372,395
4,372,399
4,372,400
4,372,402
4,372,403
4,372,404
4,372,420
4,372,475
4,372,493

4,372,515
4,372,523
4,372,527
4,372,563
4,372,584
4,372,598
4,372,616
4,372,651
4,372,706
4,372,762
4,372,837
4,372,862
4,372,873
4,372,904
4,372,927
4,372,990
4,373,003
4,373,034
4,373,066
4,373,165
4,373,185
4,373,194
49 : 4,372,077
4,372,092
4,372,173
4,372,426
4,373,108
50 : 4,372,692
4,373,166
51 : 4,372,044
4,372,152
4,372,158
4,372,159
4,372,189
4,372,224
4,372,389
4,372,394
4,372,439
4,372,642
4,372,680
4,372,708
4,373,150
53 : 4,372,082
4,372,256
4,372,357
4,372,383
4,372,440
4,372,477
4,372,505
4,372,518
4,372,640
4,372,772
4,372,853
4,372,897
4,372,918
4,373,184
54 : 4,372,758
4,372,891
4,373,111
55 : 4,372,041
4,372,143
4,372,226
4,372,250
4,372,275
4,372,312
4,372,347
4,372,433
4,372,434
4,372,444
4,372,458
4,372,490
4,372,538
4,372,565
4,372,599
4,372,784
4,372,895
4,372,940
4,372,980
4,372,983
4,373,122
4,373,124

DESIGN PATENTS

04 : 267,831
267,849
267,850
06 : 267,852
267,866
267,879
267,882
267,885
267,893
267,895

267,896
09 : 267,846
267,854
267,870
267,873
13 : 267,867
16 : 267,868
17 : 267,851
267,888

267,903
18 : 267,883
21 : 267,891
25 : 267,837
267,899
26 : 267,838
267,841
267,848
267,871

27 : 267,843
267,847
267,897
267,905
29 : 267,855
267,856
267,858
32 : 267,906
34 : 267,830

267,835
267,875
267,881
267,902
36 : 267,842
267,857
267,869
267,898
37 : 267,839

267,845
40 : 267,889
267,890
42 : 267,901
48 : 267,876
51 : 267,832
53 : 267,833
55 : 267,904
267,907

PLANT PATENTS

06 : 4,980
4,981

U.S. GOVERNMENT PRINTING OFFICE : O—1983

CHANGE OF ADDRESS FORM

NAME—FIRST, LAST

COMPANY NAME OR ADDITIONAL ADDRESS LINE

STREET ADDRESS

CITY | STATE | ZIP CODE

PLEASE PRINT OR TYPE

(or) COUNTRY

Mail this form to: NEW ADDRESS

Superintendent of Documents
Government Printing Office SSOM
Washington, D.C. 20402

Attach last subscription label here.

SUBSCRIPTION ORDER FORM

SUBSCRIPTION ORDER FORM

ENTER MY SUBSCRIPTION TO:

@ $ Domestic; @ $ Foreign.

NAME—FIRST, LAST

COMPANY NAME OR ADDITIONAL ADDRESS LINE

STREET ADDRESS

CITY | STATE | ZIP CODE

PLEASE PRINT OR TYPE

(or) COUNTRY

☐ Remittance Enclosed (Make checks payable to Superintendent of Documents)

☐ Charge to my Deposit Account No. ....

MAIL ORDER FORM TO:
Superintendent of Documents
Government Printing Office
Washington, D.C. 20402

OFFICIAL GAZETTE

of the

UNITED STATES PATENT AND TRADEMARK OFFICE

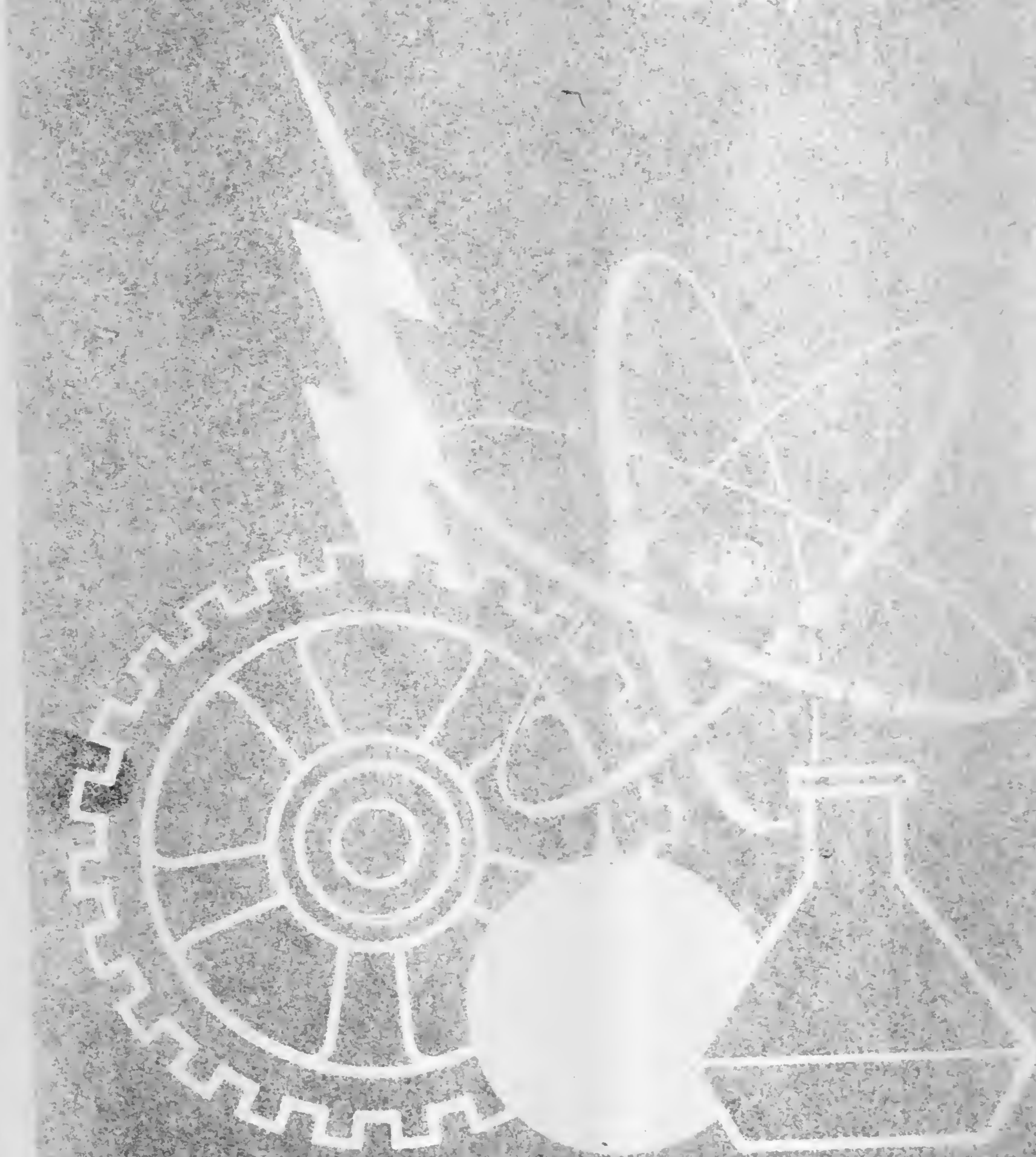

PUBLISHED WEEKLY BY AUTHORITY OF CONGRESS

OF COMMERCE

Trademark

Office

OFFICIAL GAZETTE of the
UNITED STATES PATENT AND TRADEMARK OFFICE
February 15, 1983 Volume 1027 Number 3

CONTENTS

The following are mailed under direction of the Superintendent of Documents, Government Printing Office, Washington, D.C., 20402, to whom all subscriptions should be made payable and all communications addressed:

THE OFFICIAL GAZETTE (PATENT SECTION), issued weekly.

THE OFFICIAL GAZETTE (TRADEMARK SECTION), issued weekly.

GENERAL INFORMATION concerning PATENTS.

GENERAL INFORMATION concerning TRADEMARKS.

PRINTED COPIES OF PATENTS are furnished by the Patent and Trademark Office at $1.00 each; PLANT PATENTS in color, $8.00 each; copies of TRADEMARKS at $1.00 each. Address orders to the Commissioner of Patents and Trademarks, Washington, D.C., 20231.

Printing authorized by Section 11(a)3 of Title 35, U.S. Code P.T.O.

PATENT AND TRADEMARK OFFICE NOTICES

Patent Cooperation Treaty Information

For information concerning the PCT member countries see the notice appearing in the Official Gazette at 1017 O.G. 10 on Apr. 13, 1982. For use of the European Patent Office as a Searching Authority for PCT applications filed in the United States, see the notice in the Official Gazette of Sept. 28, 1982 at 1022 O.G. 52.

Note that the domestic PCT fees have been increased as of Oct. 1, 1982 by a rule change to 37 CFR 1.445 that was published at 1021 O.G. 11 on Aug. 10, 1982. Also note that the international PCT fees have changed as of Jan. 1, 1983 and the Search Fee for the European Patent Office as Searching Authority changed as of Jan. 22, 1983. The notice regarding the change in international fees and the Search Fee for the European Patent Office appeared at 1025 O.G. 27, on 28 Dec. 1982. The current schedule of fees is as follows:

Transmittal fee	$ 125.00
Search fee	
U.S. Patent and Trademark Office as Searching Authority	
· No corresponding prior U.S. national application filed	500.00
· Corresponding prior U.S. national application filed	250.00
European Patent Office as Searching Authority	
· All cases	670.00
International Fees	
Basic Fees (first 30 pages)	265.00
Basic Supplemental Fee (for each page over 30)	5.00
Designation fee (for each national or regional office)	65.00

Dec. 3, 1982.

GERALD J. MOSSINGHOFF,
Commissioner of Patents and Trademarks.

REISSUE APPLICATIONS FILED

Notice under 37 CFR 1.11(b). The reissue applications listed below are open to inspection by the general public in the indicated Examining Groups and copies may be obtained by paying the fee therefor (37 CFR 1.21(b)).

4,003,707, Re. S.N. 403,121, Filed July 29, 1982, Cl. 23/232R, METHOD AND ARRANGEMENT FOR MEASURING THE CONCENTRATION OF GASES, Dietrich W. Lubbers, et al., Owner of Record: *Max-Planck-Gesellschaft, Munchen, Germany,* Attorney or Agent: Gordon L. Peterson, Ex. Gp.: 177

4,160,863, Re. S.N. 445,398, Filed Nov. 30, 1982, Cl. 544/30, PROCESS FOR THE PREPARATION OF THE CRYSTALLINE MONOHYDRATE OF 7-(D-ALPHA-AMINO-ALPHA-(P-HYDROXYPHENYL)-ACET-AMIDO)-3-METHYL-3-CEPHEM-4-CARBOXYLIC ACID, Daniel Bouzard, et al., Owner of Record: *Bristol-Myers, Co., New York, N.Y.,* Attorney or Agent: Robert E. Carnahan, et al., Ex. Gp.: 122

4,226,174, Re. S.N. 419,374, Filed Sept. 17, 1982, Cl. 98/104, HUMIDIFIER, James E. Vesper, Owner of Record: *Inventor,* Attorney or Agent: Robert V. Sloan, Ex. Gp.: 344

4,235,524, Re. S.N. 443,659, Filed June 29, 1979, Cl. 350/299, REFLECTIVE APPARATUS, George Lechter, et al., Owner of Record: *Rorrim, Inc., Cambridge, Mass.,* Attorney or Agent: Louis H. Reens, et al., Ex. Gp.: 257

4,250,629, Re. S.N. 443,539, Filed Nov. 22, 1982, Cl. 34/13.8, LUMBER CONDITIONING KILN, Donald C. Lewis, Owner of Record: *Inventor,* Attorney or Agent: Sewall P. Bronstein, et al., Ex. Gp.: 344

4,255,459, Re. S.N. 444,380, Filed Nov. 26, 1982, Cl. 426/521, BLANCHING, PASTEURIZING AND STERILIZING PROCESS AND APPARATUS SUITABLE THEREFOR, Donald H. G. Glen, Owner of Record: *Inventor,* Attorney or Agent: Harold D. Steinberg, et al., Ex. Gp.: 172

4,269,204, Re. S.N. 445,771, Filed Nov. 30, 1982, Cl. 131/341, CIGARETTE FILTER, Takeyoshi Yamaguchi, Owner of Record: *Inventor,* Attorney or Agent: Harold I. Kaplan, et al., Ex. Gp.: 335

4,302,104, Re. S.N. 443,381, Filed Nov. 22, 1982, Cl. 356/152, VEHICLE WHEEL ALIGNMENT APPARATUS, Lee Hunter, et al., Owner of Record: *Inventors,* Attorney or Agent: Frederick M. Woodruff, Ex. Gp.: 222

4,303,086, Re. S.N. 439,281, Filed Nov. 4, 1982, Cl. 132/73.6 PORTABLE MULTI-FUNCTION APPARATUS, Cheng Chung Wang, Owner of Record: *Inventor,* Attorney or Agent: Richard P. Berg, et al., Ex. Gp.: 336

4,303,437, Re. S.N. 445,935, Filed Dec. 1, 1982, Cl. 65/99, PROCESS FOR THE ADJUSTMENT OF THE GLASS TEMPERATURE IN A FLOAT GLASS LEHR IN ORDER TO BRING THIS PROCESS INTO OPERATION, Jean P. Garcelon, Owner of Record: *Stein Surface, Orangis, France,* Attorney or Agent: Karl F. Ross, Ex. Gp.: 173

4,306,562, Re. S.N. 443,321, Filed Nov. 22, 1982, Cl. 128/348, TEAR APART CANNULA, Thomas A. Osborne, Owner of Record: *Cook, Inc., Bloomington, Ind.,* Attorney or Agent: Harold R. Woodard, et al., Ex. Gp.: 335

4,306,624, Re. S.N. 442,913, Filed Nov. 19, 1982, Cl. 198/341, CONVEYOR APPARATUS, Antonio Magni, Owner of Record: *Axis, S.p.A., Firenze, Italy,* Attorney or Agent: Lawrence I. Lerner, Ex. Gp.: 313

REQUESTS FOR REEXAMINATION FILED

Notice under 37 CFR 1.11(c). The requests for reexamination listed below are open to inspection by the general public in the indicated Examining Groups. Copies of the requests and related papers may be obtained by paying the fee therefor established in the Rules (37 CFR 1.21(b)).

In the event correspondence to the patent owner is not received, this notice will be considered to be constructive notice to the patent owner and reexamination will proceed (37 CFR 1.248(a)(5) and 1.525(b)).

3,654,638 Reexam. No. 90/000,316, Requested: Jan. 14, 1983, Cl. 4/144.1, OUTPUT COMMODE PAN, Alice W. Nye, Owner of Record: *Inventor,* Attorney or Agent: John D. Norris, Ex. Gp.: 243, Requester: Alice W. Nye, Missouri City, Tex.

4,017,170, Reexam. No. 90/000,315, Requested: Jan. 13, 1983, Cl. 355/3R, ELECTROPHOTOGRAPHIC DEVICE, Shigehiro Komori, et al., Owner of Record: *Canon Kabushiki Kaisha, Tokyo, Japan,* Attorney or

Agent: Fitzpatrick, Cella, et al., Ex. Gp.: 210, Requester: Norman E. Lehrer, Haddonfield, N.J.

4,128,357, Reexam. No. 90/000,313, Requested: Jan. 12, 1983, Cl. 404/41, SLAB-ELEMENTS FOR COVERING THE GROUND, Gunter Barth, et al., Owner of Record: *F. Von Langsdoff Bauverfahren GmbH, Rastatt, W. Germany,* Attorney or Agent: St. Onge, Steward, et al., Ex. Gp.: 350, Requester: Russell D. Orkin, Pittsburgh, Pa.

4,275,822, Reexam. No. 90/000,314, Requested: Jan. 12, 1983, Cl. 222/63, APPARATUS FOR METERING AT LEAST TWO REACTION COMPONENTS INTO A MIXING CHAMBER, Richard Juffa, et al., Owner of Record: *Bayer Aktiengesellschaft, Leverkusen, Germany,* Attorney or Agent: Gene Harsh, et al., Ex. Gp.: 311, Requester: Richard A. Elder, Mobay Chemical Corp., Pittsburgh, Pa.

Current Membership of Performance Review Board

This notice announces the current membership of the Performance Review Board for the Patent and Trademark Office. Since the last announcement of the membership in the Federal Register of Mar. 8, 1982 (47 FR 9878), two of the members have left the agency and two new members have been appointed. The former members who have left the agency are:

Richard J. Shakman
Assistant Commissioner for Administration
U.S. Patent and Trademark Office
Washington, D.C. 20231

Herbert C. Wamsley
Director, Trademark Examining Operation
U.S. Patent and Trademark Office
Washington, D.C. 20231

The two new members are:

Samih N. Zaharna
Director, Patent Examining Group 160
U.S. Patent and Trademark Office
Washington, D.C. 20231

Samuel S. Matthews
Director, Patent Examining Group 250
U.S. Patent and Trademark Office
Washington, D.C. 20231

Each new member is appointed to serve for a term of three years to expire on Jan. 31, 1986.

The following member's term will expire on January 31, 1983:

James O. Thomas, Jr., Member, Director
Patent Examining Group 140, U.S.
Patent and Trademark Office,
Washington, D.C. 20231.

The membership of the PRB on Feb. 1, 1983, will be as follows:

Donald J. Quigg, Chairman, Deputy
Commissioner of Patents and
Trademarks, U.S. Patent and
Trademark Office, Washington,
D.C. 20231. Term-permanent.

Rene D. Tegtmeyer, Member, Assistant
Commissioner for Patents, U.S.
Patent and Trademark Office,
Washington, D.C. 20231. Term-permanent.

Margaret M. Laurence, Member, Assistant
Commissioner for Trademarks, U.S.
Patent and Trademark Office,
Washington, D.C. 20231. Term-permanent.

Bradford R. Huther, Member, Assistant
Commissioner for Finance and Planning,
U.S. Patent and Trademark Office,
Washington, D.C. 20231. Term-permanent.

Samuel S. Matthews, Member, Director,
Examining Group 250, U.S. Patent
and Trademark Office,
Washington, D.C. 20231. Term-expires Jan. 31, 1986.

Richard J. Wieland, (Outside) Member,
Assistant General Counsel for Litigation,
HQ National Aeronautics and Space
Administration, Washington, D.C. 20546
Term-expires July 12, 1984

Samih N. Zaharna, Member, Director,
Patent Examining Group 160
U.S. Patent and Trademark Office
Washington, D.C. 20231. Term-expires Jan. 31, 1986.

Persons desiring any further information about the membership of the PRB may contact Mr. Aaron W. Deitch, Personnel Officer, U.S. Patent and Trademark Office, Washington, D.C. 20231. Telephone (703) 557-2662.

Jan. 21, 1983.

DONALD J. QUIGG,
Deputy Commissioner of Patents and Trademarks.

Requirement for Filing of Verified Statements Claiming Small Entity Status

The purpose of this notice is to supplement the notice published Oct. 26, 1982 at 1023 O.G. 77, entitled "Filing of Verified Statements Claiming Small Entity Status" and to extend the practice contained therein beyond Feb. 27, 1983, pending consideration by the Patent and Trademark Office of the feasibility of implementing via the rulemaking process, a practice similar to that set forth in the notice.

The notice published Oct. 26, 1982 provides in part, that any verified statement claiming small entity status will be accepted as timely filed if (1) the first fee in a patent application has been paid on or after Oct. 1, 1982, but before Feb. 27, 1983, in the amount established for a non-small entity and (2) such verified statement is filed within three months of the date of payment of the first fee. The practice is hereby extended to a first fee paid after Feb. 27, 1983. Until further notice, if a verified statement is filed within three months of the date of payment of the first fee paid after Feb. 27, 1983, the statement will be treated as though it were present on the date the fee was paid. The correct amount of the fee will be determined and any excess will be refunded upon request.

Request for refunds, along with the verified statements, should be addressed to the Commissioner of Patents and Trademarks, Washington, D.C. 20231, and directed to the attention of the Refund Section, Accounting Division, Office of Finance. Such requests should refer to this notice.

The practice presently in effect is hereby extended until further notice. The extension will provide applicants additional time pursuant to this notice and provide the Office the time to consider the feasibility of a possible rule change.

Jan. 20, 1983.

DONALD J. QUIGG,
Acting Commissioner of Patents and Trademarks.

Section 7(c) of the Lanham Act

It has come to the attention of the Patent and Trademark Office that many registrants are requesting new certificates pursuant to Section 7(c) of the Lanham Act when they would prefer certified copies, showing title, of their registrations. Section 7(c) provides for the issu-

ance of a new certificate to the assignee of record of a registration. This document contains only the registration number and name and address of the new owner, and is attached to the original certificate of registration. It is not a substitute certificate, and does not have the necessary information to stand on its own. The cost is $100.00.

As an alternative, the registrant may order a certified copy of its registration which shows title. This document is available for $6.50. It is a reproduction of the original certificate of registration, with an additional notation indicating the current record owner. As set forth in Section 7(e), a certified copy shall be evidence in all cases where the original would be evidence.

MARGARET M. LAURENCE,
Assistant Commissioner for Trademarks.

Jan. 18, 1983.

Government-Owned Inventions

Available for Licensing

The inventions listed below are assigned to the United States Government as represented by the Secretary of the Navy and are made available for licensing by the Department of the Navy.

For further information contact:

Dr. A. C. Williams
Staff Patent Adviser
Office of Naval Research (Code 305)
800 North Quincy Street
Arlington, Va. 22217
Telephone No. 202-696-4005

U.S. DEPARTMENT OF THE NAVY
Director, Navy Patent Program/
Patent Counsel for the Navy
Office of Naval Research
Code 302
Arlington, Va. 22217

Patent application 86,859. Electrical Fire Fighting Simulator. Filed Oct. 22, 1979.

Patent application 138,013. Ellipticized Acoustical Lens Providing Balanced Astigmatism. Filed Apr. 7, 1980.

Patent application 182,367. Heat Driven Heat Pump Using Paired Ammoniated Salts. Filed Aug. 29, 1980.

Patent application 210,902. Interferometrically Tuned Laser Resonator. Filed Nov. 28, 1980.

Patent application 238,334. Thrust Shaft Seal. Filed Feb. 26, 1981.

Patent application 257,289. Pzt Composite and a Fabrication Method Thereof. Filed Apr. 24, 1981.

Patent application 258,128. Deepwater Propellant Embedded Anchor Having Emergency Release Mechanism. Filed Apr. 27, 1981.

Patent application 262,581. Integral/Low Voltage Control for Miniature Impact Tool. Filed May 11, 1981.

Patent application 263,821. Plated Bridge Step-Over Connection for Monolithic Devices and Method for Making Thereof. Filed May 15, 1981.

Patent application 267,168. Wide Swath Precision Echo Sounds. Filed May 26, 1981.

Patent application 271,781. Nonwavelength-Limited Holographic Sound Field Reconstruction. Filed June 9, 1981.

Patent application 275,547. Monolithic Indium Phosphide Integrated Logic Circuit Technology. Filed June 19, 1981.

Patent application 276.224. Field Effect Transistor Circuit for Modulator and Demodulator Applications. Filed June 22, 1981.

Patent application 276,439. Multiplexed Mos Multiaccess Memory System. Filed June 22, 1981.

Patent application 277,447. Gain-Step Companding Analog to Digital Converter. Filed June 25, 1981.

Patent application 277,448. Acoustic Degenerate Four-Wave Mixing Phase-Conjugate Reflector. Filed June 25, 1981.

Patent application 282,357. Programmable Crt Brightness Control. Filed July 13, 1981.

Patent application 284,848. Method for Forming Y-Boron. Filed July 20, 1981.

Patent application 285,661. Inductive Intense Beam Source. Filed July 21, 1981.

Patent application 294,263. Shaft Mountable Fm Transmission Torque Meter. Filed Aug. 19, 1981.

Patent application 295,175. Hybrid Fuze Triggering Device. Filed Aug. 21, 1981.

Patent application 295,891. Phthalonitriles Resins and Preparation Thereof. Filed Aug. 24, 1981.

Patent application 295,915. Phenolic-Cured Phthalonitrile Resins. Filed Aug. 24, 1981.

Patent application 296,402. System for Recording Waveforms Using Spatial Dispersion. Filed Aug. 26, 1981.

Patent application 302,346. Output for Laser Resonator. Filed Sept. 15, 1981.

Patent application 303,339. Amorphous Alloy Toroids. Filed Sept. 18, 1981.

Patent application 303,758. Ellipticized Rubber Acoustical Lens Providing Balanced Astigmatism. Filed Sept. 21, 1981.

Patent application 303,802. Protective Cover for Aircraft Having Conical Radomes. Filed Sept. 21, 1981.

Patent application 307,923. Linear Frequency Sweep Generator for Continuous Transmission Fm Sonar. Filed Oct. 2, 1981.

Patent application 308,309. Flotation Device. Filed Oct. 5, 1981.

Patent application 310,193. Method for Bonding Materials to Cured Silicone Rubber Insulation. Filed Oct. 9, 1981.

Patent application 310,938. Light-Induced Unidirectional Light Amplifier. Filed Oct. 13, 1981.

Patent application 310,939. Light-Induced Unidirectional Light Switch. Filed Oct. 13, 1981.

Patent application 314,334. Self-Shoring Adhesive System. Filed Oct. 23, 1981.

Patent application 314,616. Aircraft Weight and Center of Gravity Cockpit Readout System. Filed Oct. 26, 1981.

Patent application 315,327. Electrical Poly Y-Phase Nylon 11. Filed Oct. 26, 1981.

Patent application 322,328. Heat Measuring Device. Filed Nov. 18, 1981.

Patent application 325,419. Method for Making Radially Compliant Line Array Hose. Filed Nov. 27, 1981.

Patent application 326,303. Small Diameter, Low Frequency Multimode Hydrophone. Filed Nov. 30, 1981.

Patent application 326,872. Launch Mechanism. Filed Dec. 3, 1981.

Patent application 332,701. New Polymers as Carriers for Transition Metals. Filed Dec. 21, 1981.

Patent application 333,157. Repairable Backshell Adapter for Electrical Connector. Filed Dec. 21, 1981.

Patent application 333,607. Retainer for a Projectile Rotating Band. Filed Dec. 23, 1981.

Patent application 334,101. A Tangential Drag Enhancing Yarn. Filed Dec. 24, 1981.

Patent application 335,903. Undersea, High Pressure Bulkhead Penetrator for Use with Fiber Optic Cables. Filed Dec. 30, 1981.

Patent application 337,893. Synthesis and Polymerization of Phthalonitrile Monomers Containing Multiple Phenoxy and Sulfone Linkages. Filed Jan. 7, 1982.

Patent application 338,396. Digital Coherent Detector. Filed Jan. 11, 1982.

Patent application 339,922. Continuous Poling Technique for Pzt Fibers. Filed Jan. 18, 1982.

Patent application 339,970. Flicker Free Stretched Grams. Filed Jan. 15, 1982.

Patent application 340,679. Thermal Insulated Duct Support. Filed Jan. 19, 1982.

Patent application 340,944. Composition for Removing Metal Oxides from Surfaces. Filed Jan. 20, 1982.

Patent application 343,682. Articulated Light Guide. Filed Jan. 28, 1982.

Patent application 343,810. Nitropolyformals. Filed Jan. 29, 1982.

Patent application 344,098. Broad Bandwidth Composite Transducers. Filed Jan. 29, 1982.

Patent application 344,417. Low Loss Buoyant Coaxial Cable. Filed Feb. 1, 1982.

Patent application 344,916. A Four Pivot Linkage to Simulate Head/Neck Kinematics. Filed Feb. 2, 1982.

Patent application 347,219. A Compact Wideband Transmitting Antenna. Filed Feb. 9, 1982.

Patent application 347,676. Angle of Arrival Measurements for Two Unresolved Sources. Filed Feb. 10, 1982.

Patent application 349,134. Synthesis of a New Explosive Compound, Trans-1,4,5,8-Tetranitro-1,4,5,8-Tetraazadecalin. Filed Feb. 16, 1982.

Patent application 350,919. Isolation Steam Valve with Atmospheric Vent and Relief Capability. Filed Feb. 22, 1982.

Patent application 350,920. Armament Shorting Arrangement. Filed Feb. 22, 1982.

Patent application 351,059. Repellent Coatings for Optical Surfaces. Filed Feb. 22, 1982.

Patent application 351,711. Piperazine Derivatives of Ferrocene: Potential Solid Propellant Burning Rate Modifiers. Filed Feb. 24, 1982.

Patent application 351,831. A Coaxial Wave-Guide Commutator Feed for a Scanning Circular Phased Array Antenna. Filed Feb. 24, 1982.

Patent application 352,448. Foam Filled Muzzle Blast Reducing Device. Filed Feb. 25, 1982.

Patent application 353,295. Additives Which Prevent Gassing of Energetic Binder Containing Propellants. Filed Mar. 1, 1982.

Patent application 353,682. Target for Optically Activated Seekers and Trackers. Filed Mar. 1, 1982.

Patent application 353,787. Composite Round/Rapid Fire Gun. Filed Mar. 1, 1982.

Patent application 355,400. Simulator Interface System. Filed Mar. 8, 1982.

Patent application 355,831. Thin Film Microstrip Circuits. Filed Mar. 8, 1982.

Patent application 355,952. Amplitude Mode Acoustic Sensors. Filed Mar. 8, 1982.

Patent application 356,552. Hydraulic Aircraft/Stores Cartridge. Filed Mar. 9, 1982.

Patent application 356,590. Optical Rotation-Sensing Interferometer with (3X3)-(2X2) Directional Coupler. Filed Mar. 9, 1982.

Patent application 356,863. Method of Preparing and Lasing Laserable Color Centers Crystals. Filed Mar. 10, 1982.

Patent application 358,940. Fabrication of Schottky Barrier Diodes on $PBCl_2$-$PbS_{.5}Se_{.5}$Epitaxial Films. Filed Mar. 17, 1982.

Patent application 358,941. Sensitized Epitaxial Infrared Detector. Filed Mar. 17, 1982.

Patent application 360,524. Ground Fault Detector and Shut-Down System. Filed Mar. 22, 1982.

Patent application 361,330. Electronic Plug-In Module Extractor. Filed Mar. 25, 1982.

Patent application 361,713. Water Jet Sediment Probe. Filed Mar. 25, 1982.

Patent application 362,004. Ellipticized Acoustical Liquid Lens Providing Balanced Astigmatism. Filed Mar. 25, 1982.

Patent application 362,354. Heater for Ultra High Pressure Compressed Gas. Filed Mar. 26, 1982.

Patent application 362,355. Expander Stroke Delay Mechanism for Split Stirling Cryogenic Cooler. Filed Mar. 26, 1982.

Patent application 362,829. Field of View Test Apparatus. Filed Mar. 29, 1982.

Patent application 363,349. Aircraft Loading Adapter for Use with Ordnance Lift Vehicle. Filed Mar. 29, 1982.

Patent application 364,062. A Pyrolysis-Mass Spectrometry Approach to Organic Marine Chemistry Using Chemical Ionization. Filed Mar. 31, 1982.

Patent application 364,098. Calibration Method for Acoustic Scattering Measurements Using a Spherical Target. Filed Mar. 31, 1982.

Patent application 365,845. A Generalized Drifting Oceanographic Sensor. Filed Apr. 5, 1982.

Patent application 365,857. A Handprinted Symbol Recognition System. Filed Apr. 5, 1982.

Patent application 366,954. Method of Recovering a Copolymer. Filed Apr. 9, 1982.

Patent application 368,933. Controlled Gas Generator System. Filed Apr. 16, 1982.

Patent application 369,377. Range Clearance by Enhancing Oxidation of Ferrous Ordnance In-Situ. Filed Apr. 19, 1982.

Patent application 370,309. A Capstan Adaptable "V" Puller. Filed Apr. 21, 1982.

Patent application 370,310. A Split-Bus Multiprocessor System. Filed Apr. 21, 1982.

Patent application 370,755. Fiber Optic Gyroscope with Alternating Output Signal. Filed Apr. 22, 1982.

Patent application 371,142. Instantaneous Start and Stop Gas Generator. Filed Apr. 23, 1982.

Patent application 371,706. Interfering Noise Pulse Eliminator and Its Use. Filed Apr. 26, 1982.

Patent application 371,869. High Density, Low Viscosity AirBreather Fuel (R.J.-4-I). Filed Apr. 26, 1982.

Patent application 373,080. Low Viscosity Air Breathing Missile Fuel. Filed Apr. 29, 1982.

Patent application 373,082. An Arcing Fault Detector. Filed Apr. 29, 1982.

Patent application 373,305. Tolerancing Device. Filed Apr. 29, 1982.

Patent application 373,756. Fluorescence Quenching Technique for Scanning Visual Systems. Filed Apr. 30, 1982.

Patent application 374,207. Conformal Array Compensation Beanformer. Filed May 3, 1982.

Patent application 374,575. Helmet Mounted Display Projector. Filed May 3, 1982.

Patent application 374,760. Leak Detector. Filed May 3, 1982.

Patent application 375,797. Small Arms Firing Effects Simulator. Filed May 8, 1982.

Patent application 376,474. Digital Compass Having a Ratiometric Bearing Processor. Filed May 10, 1982.

Patent application 377,106. P1 Polyphase Code Expander-Compressor. Filed May 11, 1982.

Patent application 377,107. Phase Coded Pulse Expander-Compressor. Filed May 11, 1982.

Patent application 377,108. P2 Polyphase Code Expander-Compressor. Filed May 11, 1982.

Patent application 377,119. Synthesis of the Isomeric Aminotetranitrotoluenes. Filed May 11, 1982.

Patent application 377,240. Isometric Grip Bending Beam Control. Filed May 12, 1982.

Patent application 378,161. Two Layer Hydraulic Analogy for Testing Supersonic Gas Flows with Shock Waves. Filed May 14, 1982.

Patent application 378,167. An Improved Synthesis of 3-Hydrooxyoxetane. Filed May 14, 1982.

Patent application 379,685. Tactical Expendable Device. Filed May 19, 1982.

Patent application 380,171. Fresnel Lens in an Improved Infinity Image Display System. Filed May 20, 1982.

Patent application 381,099. Lithium-6 Wire Mesh Neutron Detector. Filed May 24, 1982.

Patent application 381,829. Four Bar Manifold. Filed May 24, 1982.

Patent application 382,850. Phase-Lock Fiber Optic Interferometer. Filed May 27, 1982.

Patent application 383,034. High Speed Sample and Hold Circuit. Filed May 28, 1982.

Patent application 383,421. An Improved Preparation of Bis (Axidomethyl) Oxetane. Filed June 1, 1982.

Patent application 383,867. Atmospheric Transmissometer. Filed June 1, 1982.

Patent application 383,918. Vmos-Fet Impatt Diode Pulse Bias Circuit. Filed June 1, 1982.

Patent application 385,739. Three-Mirror Active-Passive Semiconductor Laser. Filed June 7, 1982.

Patent application 386,154. Lightweight Neutron Detector. Filed June 7, 1982.

Patent application 386,465. Solid State Hydrogen Pumping and Storage Material. Filed June 9, 1982.

Patent application 386,828. Orthogonalizer for Inphase I and Quadrature Digital Data. Filed June 9, 1982.

Patent application 386,838. Real-Data Digital-Real-Weight Canceller. Filed June 9, 1982.

Patent application 388,049. Synthesis and Polymerization of 3-Axidooxetane. Filed June 14, 1982.

Patent application 388,563. Dual-Band, Low Sidelobe, High Efficiency Mirror Antenna. Filed June 15, 1982.

Patent application 389,132. Wide-Band Distributed RF Coupler. Filed June 15, 1982.

Patent application 389,139. Low Sidelobe, High Efficiency Mirror Antenna. Filed June 15, 1982.

Patent application 389,521. An Automatic Strobe/Camera Control Unit. Filed June 17, 1982.

Patent application 390,096. Vector Summation Power Amplifier. Filed June 21, 1982.

Patent application 391,191. Oxygen Breathing Apparatus Simulator. Filed June 23, 1982.

Patent application 391,900. Overboarding Fixture. Filed June 25, 1982.

Patent application 391,901. New Plasticizer for Nitropolymers. Filed June 25, 1982.

Patent application 391,902. Improved Process for the Preparation of Dimenthylmethylenedinitramine. Filed June 25, 1982.

Patent application 392,185. Fiber Optics Image Scope (Microendoscope), Ureteroscope. Filed June 28, 1982.

Patent application 392,813. Method for Measuring Material Characteristics. Filed June 28, 1982.

Patent application 393,246. Directional Line-Hydrophone Array Calibrator. Filed June 29, 1982.

Patent application 393,972. Fiber Optic Spectrophone. Filed June 30, 1982.

Patent application 394,084. Improved Method for the Preparation of Methylnitramine. Filed July 1, 1982.

Patent application 394,218. Improved Synthesis of Dimethylmethylene Dintramine. Filed July 1, 1982.

Patent application 394,975. Munroe Effect Breaching Device. Filed July 2, 1982.

Patent application 395,431. Polarimetric Image Recorder. Filed July 6, 1982.

Patent application 398,499. Two Headed Magnetic Proximity Sensor. Filed July 15, 1982.

Patent application 398,827. Fluorine Implantation of Polyactetylene and Graphite. Filed July 18, 1982.

Patent application 399,512. A Sea Floor Penetraometer. Filed July 19, 1982.

Patent application 399,519. Dual Sense, Circularly Polarized Helical Antenna. Filed July 19, 1982.

Patent application 401,277. Ultra-Fast Field Emitter Array Vacuum Integrated Circuit Switching. Filed July 23, 1982.

Patent application 402,403. High Resolution Defraction Grating. Filed July 27, 1982.

Patent application 403,837. Fiber Optic Spectrophone for Remote Sensing. Filed July 30, 1982.

Patent application 403,838. Thermovoltaic Power Source. Filed July 30, 1982.

Patent application 405,465. The Modified Betatron Accelerator. Filed Aug. 5, 1982.

Patent application 406,427. Fiber Optic Magnetic Field Sensor. Filed Aug. 9, 1982.

Patent application 411,777. Single Handed Set-Up Apparatus. Filed Aug. 26, 1982.

Patent application 417,740. Underwater Splice for Submarine Coaxial Cable. Filed Sept. 13, 1982.

Patent application 420,451. Panoramic Lens. Filed Sept. 20, 1982.

Patent 3,382,678. Gas Turbine Cycle Providing a High Pressure Efflux. Filed July 12, 1966. Patented May 14, 1968.

Patent 3,434,551. Buoyant Coring Apparatus. Filed June 26, 1967. Patented Mar. 25, 1969.

Patent 3,993,577. Method for Production of Heat and Hydrogen Gas. Filed Dec. 8, 1975. Patented Nov. 23, 1976.

Patent 4,232,313. Tactical Navigation and Communication System. Filed Sept. 22, 1972. Patented Nov. 4, 1980.

Patent 4,248,854. Production of Antibodies Toward Asbestos and Immunoassay Therewith. Filed Aug. 27, 1979. Patented Feb. 3, 1981.

Patent 4,264,362. Supercorroding Galvanic Cell Alloys for Generation of Heat and Gas. Filed Aug. 13, 1979. Patented Apr. 28, 1981.

Patent 4,279,969. Method of Forming Thin Niobium Carbonitride Superconducting Films of Exceptional Purity. Filed Feb. 20, 1980. Patented July 21, 1981.

Patent 4,284,617. Solid Compositions for Generating Fluorine and Gaseous Fluorine Compounds. Filed Nov. 30, 1979. Patented Aug. 18, 1981.

Patent 4,284,747. Cis-Trans Fluoropolyol Polyacrylate. Filed Feb. 25, 1980. Patented Aug. 18, 1981.

Patent 4,286,212. Variable Signal Generator for Galvanometer Exhibiting Hysteresis. Filed Sept. 8, 1978. Patented Aug. 25, 1981.

Patent 4,293,339. Underwater Wax Formulation and Method. Filed Feb. 28, 1980. Patented Oct. 6, 1981.

Patent 4,295,604. Automatic Temperature Control System for Diver Heating System. Filed Apr. 24, 1980. Patented Oct. 20, 1981.

Patent 4,295,989. Luminescent Hafnia Composition. Filed June 23, 1980. Patented Oct. 20, 1981.

Patent 4,299,431. Underwater-Mateable Electrical Connector. Filed Mar. 3, 1980. Patented Nov. 10, 1981.

Patent 4,304,613. Mini Base Alloy Shape Memory Enhancement Through Thermal and Mechanical Processing. Filed May 12, 1980. Patented Dec. 8, 1981.

Patent 4,304,870. Ablative-Resistant Dielectric Ceramic Articles. Filed Feb. 20, 1980. Patented Dec. 8, 1981.

Patent 4,304,896. Polyphthalocyanine Resins. Filed Aug. 19, 1980. Patented Dec. 8, 1981.

Patent 4,305,073. Radar Video Compression System. Filed Jan. 30, 1980. Patented Dec. 3, 1981.

Patent 4,305,998. Protective Coating. Filed Feb. 4, 1980. Patented Dec. 15, 1981.

Patent 4,306,413. Hydraulic Power and Control System. Filed June 30, 1975. Patented Dec. 22, 1981.

Patent 4,306,512. Homing Torpedo System. Filed Aug. 13, 1964. Patented Dec. 22, 1981.

Patent 4,306,552. Plasticized Poly-e-Caprolactone. Filed Aug. 12, 1980. Patented Dec. 22, 1981.

Patent 4,306,783. Scattered-Light Imaging System. Filed Feb. 27, 1980. Patented Dec. 22, 1981.

Patent 4,307,035. Method of Synthesizing Resin Prepolymers. Filed Aug. 5, 1980. Patented Dec. 22, 1981.

Patent 4,307,507. Method of Manufacturing a Field-Emission Cathode Structure. Filed Sept. 10, 1980. Patented Dec. 29, 1981.

Patent 4,308,603. Ferrofluid Transducer. Filed Sept. 4, 1980. Patented Dec. 29, 1981.

Patent 4,308,753. Low-Power Electromagnetic Flow-Meter. Filed Dec. 3, 1979. Patented Jan. 5, 1982.

Patent 4,309,109. Pulsed Interferometric Remote Gauge. Filed May 25, 1972. Patented Jan. 5, 1982.

Patent 4,309,773. Apparatus and Method for Radio Channel Selection. Filed Apr. 18, 1980. Patented Jan. 5, 1982.

Patent 4,310,843. Electron Beam Controlled Array Antenna. Filed Mar. 6, 1970. Patented Jan. 12, 1982.

Patent 4,311,290. Aircraft Recovery System. Filed Nov. 1, 1981. Patented Jan. 19, 1982.

Patent 4,313,170. Autocorrelation Side Lobe Reduction Device for Phase-Coded Signals. Filed June 23, 1980. Patented Jan. 26, 1982.

Patent 4,314,743. Optical Gain Control Device. Filed Nov. 19, 1979. Patented Feb. 9, 1982.

Patent 4,314,784. Seafloor Attachment Bolts. Filed May 22, 1980. Patented Feb. 9, 1982.

Patent 4,314,873. Method for Depositing Heteroepitaxially InP on GaAs Semi-Insulating Substrates. Filed July 5, 1977. Patented Feb. 9, 1982.

Patent 4,315,093. Fluorinated Polyphthalocyanines. Filed Nov. 9, 1979. Patented Feb. 9, 1982.

Patent 4,315,255. Multiple-Quantum Interference Superconducting Analog-to-Digital Converter. Filed Oct. 27, 1980. Patented Feb. 9, 1982.

Patent 4,315,258. Transmissive and Reflective Liquid Crystal Display. Filed Feb. 15, 1980. Patented Feb. 9, 1982.

Patent 4,315,324. Directly Modulated Sonobuoy Transmitter Using Surface Acoustic Wave Sensor. Filed Sept. 11, 1980. Patented Feb. 9, 1982.

Patent 4,315,609. Target Locating and Missile Guidance System. Filed June 16, 1971. Patented Feb. 16, 1982.

Patent 4,315,651. Coupling for Quick Attachment to Plate-Like Structure. Filed Apr. 3, 1980. Patented Feb. 16, 1982.

Patent 4,316,201. Low-Barrier-Height Epitaxial Ge-GaAs Mixer Diode. Filed May 8, 1980. Patented Feb. 16, 1982.

Patent 4,317,211. Manchester Code Decoding Apparatus. Filed June 2, 1980. Patented Feb. 23, 1982.

Patent 4,317,797. Resin Purger. Filed Aug. 25, 1980. Patented Mar. 2, 1982.

Patent 4,318,099. Clutter Filter Using a Minimum Number of Radar Pulses. Filed Feb. 21, 1980. Patented Mar. 2, 1982.

Patent 4,319,242. Integrated Weapon Control Radar System. Filed Mar. 4, 1980. Patented Mar. 9, 1982.

Patent 4,319,372. Submarine Rescue Cable Reel. Filed Apr. 7, 1980. Patented Mar. 16, 1982.

Patent 4,320,289. Precision Laser Pulse Radiometer. Filed May 27, 1980. Patented Mar. 16, 1982.

Patent 4,320,703. Target Detecting Device. Filed May 27, 1966. Patented Mar. 23, 1982.

Patent 4,321,549. Switching Quadrature Detector. Filed May 6, 1980. Patented Mar. 23, 1982.

Patent 4,321,559. Multiwavelength Self-Pumed Solid State Laser. Filed Apr. 3, 1980. Patented Mar. 23, 1982.

Patent 4,321,871. Target Detecting Device. Filed Apr. 24, 1968. Patented Mar. 30, 1982.

Patent 4,323,025. Torpedo Steering Control System. Filed Mar. 7, 1961. Patented Apr. 6, 1982.

Patent 4,323,900. Omnidirectional Microstrip Antenna. Filed Oct. 1, 1979. Patented Apr. 6, 1982.

Patent 4,324,272. Anti-Slosh Baffle Compartment Assembly. Filed Oct. 17, 1980. Patented Apr. 13, 1982.

Patent 4,324,378. High-Torque/Acceleration Stabilized Sensor Platform. Filed Mar. 3, 1980. Patented Apr. 13, 1982.

Patent 4,324,556. Portable Cobb Analyzer. Filed Mar. 25, 1980. Patented Apr. 13, 1982.

Patent 4,325,181. Simplified Fabrication Method for High-Performance Fet. Filed Dec. 17, 1980. Patented Apr. 20, 1982.

Patent 4,325,246. Compass Checker. Filed May 29, 1981. Patented Apr. 20, 1982.

Patent 4,325,744. Method and Composition for Cleaning Metal Surfaces with a Film-Metal Composition. Filed July 25, 1980. Patented Apr. 20, 1982.

Patent 4,327,377. Phase-Slipped Time Delay and Integration Scanning System. Filed June 6, 1980. Patented Apr. 27, 1982.

Patent 4,327,493. Method and Apparatus for Measurement of Distance Between Holes and Parrallel Axes. Filed Mar. 4, 1980. Patented May 4, 1982.

Patent 4,328,496. Delay Control for a Pulse Repeat-Back Jamming System. Filed Aug. 27, 1958. Patented May 4, 1982.

Patent 4,328,498. Phased Array Antenna for Satellite. Filed May 21, 1970. Patented May 4, 1982.

Patent 4,328,502. Continuous Slot Antennas. Filed June 21, 1965. Patented May 4, 1982.

Patent 4,328,554. Programmable Frequency Synthesizer. Filed July 3, 1980. Patented May 4, 1982.

Patent 4,328,569. Array Shading for a Broadband Constant Directivity Transducer. Filed Nov. 14, 1979. Patented May 4, 1982.

Patent 4,328,736. Fuseless Explosive Propellant. Filed June 2, 1980. Patented May 11, 1982.

Patent 4,329,540. Bocking Feed-Through for Coaxial Cable. Filed Apr. 3, 1980. Patented May 11, 1982.

Patent 4,329,651. Chirp Filters/Signals. Filed Apr. 9, 1980. Patented May 11, 1982.

Patent 4,329,938. Evaporator Tool with Remote Substrate Reorientation Mechanism. Filed Oct. 3, 1980. Patented May 18, 1982.

Patent 4,330,238. Automatic Actuator for Variable Speed Pump. Filed Mar. 4, 1980. Patented May 18, 1982.

Patent 4,330,343. Refractory Passivated Ion-Implanted GaAs Ohmic Contacts. Filed Dec. 10, 1980. Patented May 18, 1982.

Patent 4,330,570. Selective Photoinduced Condensation Technique for Producing Semiconducting Compounds. Filed Apr. 24, 1981. Patented May 18, 1982.

Patent 4,330,593. Pzt/Polymer Composites and Their Fabrication. Filed Nov. 13, 1980. Patented May 18, 1982.

Patent 4,330,632. Lightweight Concrete Using Polymer Filled Aggregate for Ocean Applications. Filed Dec. 24, 1980. Patented May 18, 1982.

Patent 4,330,689. Multirate Digital Voice Communication Processor. Filed Jan. 28, 1980. Patented May 18, 1982.

Patent 4,330,763. Resonantly Pumped Mid-Ir Laser. Filed Mar. 19, 1980. Patented May 18, 1982.

Patent 4,330,768. Dispersion Compensated Acoustic Surface Waveguides Using Diffused Substrates. Filed Oct. 2, 1980. Patented May 18, 1982.

Patent 4,330,784. Variable Waveguide Continuous Slot Antenna. Filed Feb. 13, 1967. Patented May 18, 1982.

Patent 4,330,855. Apparatus for Multiplexing Digital Signals. Filed Mar. 3, 1980. Patented May 18, 1982.

Patent 4,330,895. Stabilizer for Reducing Motion of an Object Disposed in a Fluid. Filed Oct. 1, 1979. Patented May 25, 1982.

Patent 4,330,932. Process for Preparing Isolated Junctions in Thin-Film Semi-Conductors Utilizing Shadow-Masked Deposition to Form Graded-Side Means. Filed May 14, 1980. Patented May 25, 1982.

Patent 4,331,374. Coaxial Termination for Cable In-Line Electronic Applications. Filed July 24, 1980. Patented May 25, 1982.

Patent 4,333,079. Doppler Signal Processing Circuit. Filed July 21, 1970. Patented June 1, 1982.

Patent 4,333,169. Flow Noise Suppression System. Filed Oct. 4, 1966. Patented June 1, 1982.

Patent 4,334,048. Olefin Metathesis. Filed May 26, 1981. Patented June 8, 1982.

Patent 4,334,229. Leaky Waveguide Continuous Slot Antenna. Filed Nov. 12, 1968. Patented June 8, 1982.

Patent 4,334,277. High-Accuracy Multipliers Using Analog and Digital Components. Filed Dec. 11, 1978. Patented June 8, 1982.

Patent 4,335,520. Survey Spar System for Precision Offshore Seafloor Surveys. Filed Sept. 22, 1980. Patented June 22, 1982.

Patent 4,335,670. Flexible Side Connector for Floating and Elevated Platforms. Filed July 14, 1980. Patented June 22, 1982.

Patent 4,336,047. Method for Fabricating Single-Mode and Multimode Fiber Optic Access Couplers. Filed Jan. 2, 1981. Patented June 22, 1982.

Patent 4,336,362. Acetylene-Terminated Dianil Monomer and the Polymer Thereform. Filed Mar. 2, 1982. Patented June 22, 1982.

Patent 4,336,367. Epoxy Adhesive Composition. Filed May 15, 1969. Patented June 22, 1982.

Patent 4,336,591. Maximum Depth Monitoring Apparatus. Filed July 7, 1982. Patented June 22, 1982.

Patent 4,337,105. Spherical Segment Inner Surface Force Applicator for Laminating Non-Planar Surfaces. Filed Sept. 4, 1980. Patented June 29, 1982.

Patent 4,338,466. Prostaglandin Analogs and Process of Preparation Thereof. Filed Apr. 2, 1981. Patented July 6, 1982.

Patent 4,338,560. Albedd Radiation Power Converter. Filed Oct. 12, 1979. Patented July 6, 1982.

Patent 4,338,603. Self Adaptive Correlation Radar. Filed May 25, 1967. Patented July 6, 1982.

Patent 4,339,683. Electrical Connection. Filed Feb. 4, 1980. Patented July 13, 1982.

Patent 4,339,764. PbS_xSe_{1-x} Semiconductor. Filed Mar. 26, 1979. Patented July 13, 1982.

Patent 4,339,930. Control System for Solar-Assisted Heat Pump System. Filed July 3, 1980. Patented July 20, 1982.

Patent 4,340,755. Diguanide Diperchlorate and Process for Preparation Thereof. Filed Oct. 10, 1980. Patented July 20, 1982.

Patent 4,341,651. Compositions and Methods for Generation of Gases Containing Hydrogen or Hydrogen Isotopes. Filed Aug. 26, 1980. Patented July 27, 1982.

Patent 4,342,228. Angular Accelerometer. Filed Nov. 4, 1980. Patented Aug. 3, 1982.

Patent 4,342,734. Method for Forming Y-Boron. Filed July 20, 1981. Patented Aug. 3, 1982.

Patent 4,346,420. Magnetoplasmadynamic Switch. Filed May 28, 1980. Patented Aug. 24, 1982.

Patent 4,346,520. Alinement Method. Filed Jan. 24, 1978. Patented Aug. 31, 1982.

Patent 4,346,662. Self-Contained Backflush/Start System for Suction LFC Undersea Vehicle. Filed May 7, 1980. Patented Aug. 31, 1982.

Patent 4,350,041. System and Method for Measurement of Dynamic Angular or Linear Displacement. Filed Oct. 9, 1980. Patented Sept. 21, 1982.

ERRATUM

In the Official Gazette of Dec. 16, 1980 under TRADEMARK REGISTRATIONS CANCELLED, Section 8, on page TM 128, "986,906. AMERICAN HERITAGE, (U.S.Cl. 28) Reg. 6-25-74." should be deleted.

PATENT NOTICES

Certificates of Correction for the Week of Feb. 15, 1983

D. 266,030	4,337,758	4,350,092	4,355,780
4,191,486	4,337,876	4,350,499	4,356,081
4,206,205	4,337,988	4,350,824	4,356,150
4,225,210	4,338,668	4,350,851	4,356,190
4,225,571	4,338,784	4,350,891	4,356,944
4,227,637	4,339,368	4,350,924	4,357,046
4,243,994	4,341,023	4,350,963	4,357,116
4,291,022	4,343,219	4,351,215	4,357,226
4,298,896	4,343,406	4,351,238	4,357,519
4,305,471	4,343,917	4,351,470	4,357,664
4,309,503	4,344,707	4,351,645	4,357,726
4,309,669	4,345,103	4,351,973	4,357,860
4,319,270	4,345,386	4,352,101	4,358,572
4,322,072	4,345,403	4,352,382	4,358,952
4,322,487	4,345,721	4,352,547	4,359,501
4,322,520	4,347,423	4,352,680	4,360,059
4,323,064	4,347,846	4,352,821	4,360,556
4,323,475	4,347,927	4,353,023	4,360,613
4,324,180	4,347,970	4,353,039	4,360,658
4,324,789	4,348,014	4,353,121	4,360,685
4,326,895	4,348,081	4,353,554	4,360,908
4,328,008	4,348,508	4,353,705	4,360,913
4,330,815	4,348,534	4,354,164	4,360,958
4,331,604	4,348,665	4,354,514	4,361,835
4,332,880	4,348,968	4,354,667	4,362,041
4,337,248	4,349,081	4,355,361	4,363,481
4,337,373	4,349,895	4,355,470	

Disclaimers

3,237,230.—*John L. Forrest,* Windsor, N.Y. APPARATUS FOR REMOVING MARGINAL STRIPS OF COATING FROM A PRECOATED WEB. Patent dated Mar. 1, 1966. Disclaimer filed Sept. 30, 1982, by the assignee, *Eastman Kodak Co.*

Hereby enters this disclaimer to all claims of said patent.

3,255,801.—*Royal C. Tabordon,* Casco, Wis. POWER OPERATED TIRE CHANGING STAND. Patent dated June 14, 1966. Disclaimer filed June 25, 1980, by the assignee, *Hennessy Industries, Inc.*

Hereby enters this disclaimer to claims 1, 5 and 11 of said patent.

3,285,747.—*Robert F. Coles,* North St. Paul, Minn. COLOR FORMERS CONTAINING A M-ALKYLPHENOXYACYL GROUP. Patent dated Nov. 15, 1966. Disclaimer filed Sept. 30, 1982, by the assignee, *Eastman Kodak Co.*

Hereby enters this disclaimer to all claims of said patent.

3,316,093.—*Edward Cerwonka,* Binghamton, N.Y. COLORED PHOTOIMAGES FROM FERRIC SALTS OF PHENOLIC a-HYDROXY ACIDS. Patent dated Apr. 25, 1967. Disclaimer filed Sept. 30, 1982, by the assignee, *Eastman Kodak Co.*

Hereby enters this disclaimer to all claims of said patent.

3,476,940.—*Robert W. Houser,* Vestal, N.Y. PHOTOMULTIPLIER SYSTEM WHEREBY DYNODE VOLTAGE SUPPLY IS VARIED IN ACCORDANCE WITH MODULATION OF INCIDENT LIGHT HOLDING OUTPUT CURRENT CONSTANT AND USING MEASURE OF DYNODE VOLTAGE AS MEASURE OF MODULATION OF LIGHT. Patent dated Nov. 4, 1969. Disclaimer filed Sept. 30, 1982, by the assignee, *Eastman Kodak Co.*

Hereby enters this disclaimer to all claims of said patent.

3,523,793.—*Vincent J. Miceli,* Conklin, N.Y. DEVELOPERS CONTAINING SILVER HALIDE SOLVENTS. Patent dated Aug. 11, 1970. Disclaimer filed Sept. 30, 1982, by the assignee, *Eastman Kodak Co.*

Hereby enters this disclaimer to all claims of said patent.

3,624,724.—*Barnard C. Sheffer,* Binghamton, N.Y. MEDICAL X-RAY SENSITOMETER. Patent dated Nov. 30, 1971. Disclaimer filed Sept. 30, 1982, by the assignee, *Eastman Kodak Co.*

Hereby enters this disclaimer to all claims of said patent.

3,994,973.—*Clarence E. Habermann* and *Ben A. Tefertiller,* Midland, Mich. CATALYSTS FOR THE HYDRATION OF NITRILES TO AMIDES. Patent dated Nov. 30, 1976. Disclaimer filed Dec. 6, 1982, by the assignee, *The Dow Chemical Co.*

Hereby enters this disclaimer to claims 1-11, 14, 15, 16, 18 and 19 of said patent.

4,066,457.—*Theodore Panasik,* Vestal; *Felix Viro,* Apalachin; *Burton H. Waxman,* Endwell and *Robert T. Shannahan,* Endicott, N.Y. COLOR DEVELOPER FOR DIFFUSION TRANSFER. Patent dated Jan. 3, 1978. Disclaimer filed Sept. 30, 1982, by the assignee, *Eastman Kodak Co.*

Hereby enters this disclaimer to all claims of said patent.

4,158,840.—*Carl E. Schwab,* Huntington Station, N.Y. 3-D RADAR COMPRISING 2-D RADAR WITH HEIGHT FINDING ATTACHMENT. Patent dated June 19, 1979. Disclaimer filed Nov. 8, 1982, by the assignee, *General Signal Corp.*

Hereby enters this disclaimer to claims 1 and 8 of said patent.

4,188,588.—*Andrew G. F. Dingwall,* Bridgewater, N.J. CIRCUITRY WITH UNBALANCED LONG-TAILED-PAIR CONNECTIONS OF FET'S. Patent dated Feb. 12, 1980. Disclaimer filed Oct. 19, 1982, by the assignee, *RCA Corp.*

Hereby enters this disclaimer to all claims of said patent.

Reference Collections of U.S. Patents Available for Public Use in Patent Depository Libraries

The libraries listed herein, designated as patent depository libraries, receive current issues of U.S. Patents and maintain collections of earlier issued patents. The scope of these collections varies from library to library, ranging from patents of only recent months or years in some libraries to all or most of the patents issued since 1870, or earlier, in other libraries.

These patent collections are open to public use and each of the patent depository libraries, in addition, offers the publications of the patent classification system (e.g. The Manual of Classification, Index to the U.S. Patent Classification, Classification Definitions, etc.) and provides technical staff assistance in their use to aid the public in gaining effective access to information contained in patents. With one exception, as noted in the table following, the collections are organized in patent number sequence.

Depending upon the library, the patents may be available in microfilm, in bound volumes of paper copies, or in some combination of both. Facilities for making paper copies from either microfilm in reader-printers or from the bound volumes in paper-to-paper copies are generally provided for a fee.

Owing to variations in the scope of patent collections among the patent depository libraries and in their hours of service to the public, anyone contemplating use of the patents at a particular library is advised to contact that library, in advance, about its collection and hours, so as to avert possible inconvenience.

State	*Name of Library*	*Telephone Contact*
Alabama	Birmingham Public Library	(205) 254-2555
Arizona	Tempe: Science Library, Arizona State University	(602) 965-7607
California	Los Angeles Public Library	(213) 626-7555 Ext. 273
	Sacramento: California State Library	(916) 322-4572
	Sunnyvale: Patent Information Clearinghouse*	(408) 738-5580
Colorado	Denver Public Library	(303) 571-2122
Delaware	Newark: University of Delaware	(302) 738-2238
Georgia	Atlanta: Price Gilbert Memorial Library, Georgia Institute of Technology	(404) 894-4508
Illinois	Chicago Public Library	(312) 269-2865
Louisiana	Baton Rouge: Troy H. Middleton Library, Louisiana State University	(504) 388-2570
Massachusetts	Boston Public Library	(617) 536-5400 Ext. 265
Michigan	Detroit Public Library	(313) 833-1450
Minnesota	Minneapolis Public Library & Information Center	(612) 372-6552
Missouri	Kansas City: Linda Hall Library	(816) 363-4600
	St. Louis Public Library	(314) 241-2288 Ext. 214, Ext. 215
Nebraska	Lincoln: University of Nebraska-Lincoln, Engineering Library	(402) 472-3411
New Hampshire	Durham: University of New Hampshire Library	(603) 862-1777
New Jersey	Newark Public Library	(201) 733-7814
New York	Albany: New York State Library	(518) 474-5125
	Buffalo and Erie County Public Library	(716) 856-7525 Ext. 267
	New York Public Library (The Research Libraries)	(212) 930-0850
North Carolina	Raleigh: D. H. Hill Library, N.C. State University	(919) 737-3280
Ohio	Cincinnati & Hamilton County, Public Library of	(513) 369-6936
	Cleveland Public Library	(216) 623-2870
	Columbus: Ohio State University Libraries	(614) 422-6286
	Toledo/Lucas County Public Library	(419) 255-7055 Ext. 212
Oklahoma	Stillwater: Oklahoma State University Library	(405) 624-6546
Pennsylvania	Philadelphia: Franklin Institute Library	(215) 448-1321**
	Pittsburgh: Carnegie Library of Pittsburgh	(412) 622-3138
	University Park: Pattee Library, Pennsylvania State University	(814) 865-4861
Rhode Island	Providence Public Library	(401) 521-7722 Ext. 226
South Carolina	Charleston: Medical University of South Carolina	(803) 792-2372
Tennessee	Memphis & Shelby County Public Library and Information Center	(901) 528-2957
Texas	Dallas Public Library	(214) 748-9071
	Houston: The Fondren Library, Rice University	(713) 527-8101 Ext. 2587
Washington	Seattle: Engineering Library, University of Washington	(206) 543-0740
Wisconsin	Madison: Kurt F. Wendt Engineering Library, University of Wisconsin	(608) 262-6845
	Milwaukee Public Library	(414) 278-3043

All of the above-listed libraries, except the Cleveland Public Library, offer CASSIS (Classification And Search Support Information System), which provides direct, on-line access to Patent and Trademark Office data.

*Collection organized by subject matter.

**Call only between the hours of 10:00 a.m. and 5:00 p.m.

PATENT EXAMINING CORPS

RENE D. TEGTMEYER, Assistant Commissioner

WILLIAM FELDMAN, Deputy Assistant Commissioner

CONDITION OF PATENT APPLICATIONS AS OF December 25, 1982

PATENT EXAMINING GROUPS	Actual Filing Date of Oldest New Case Awaiting Action

CHEMICAL EXAMINING GROUPS

GENERAL CHEMISTRY AND PETROLEUM CHEMISTRY, GROUP 110—D. E. TALBERT, Director 11-12-80
Inorganic Compounds; Inorganic Compositions; Organo-Metal and Organo-Metalloid Chemistry; Metallurgy; Metal-
lurgical Apparatus; Metal Stock; Electro Chemistry; Batteries; Hydrocarbons; Mineral Oil Technology; Lubricating
Compositions; Gaseous Compositions; Fuel and Igniting Devices.

GENERAL ORGANIC CHEMISTRY, GROUP 120—C. E. VAN HORN, Director 8-06-81
Heterocyclic Amides; Alkaloids; Azo; Sulfur; Misc. Esters; Carbohydrates; Herbicides; Poisons; Medicines; Cosmetics;
Steroids; Oxo and Oxy; Quinones; Acids; Carboxylic Acid Esters; Acid Anhydrides; Acid Halides.

HIGH POLYMER CHEMISTRY, PLASTICS AND MOLDING, GROUP 140—J. O. THOMAS, JR., Director 12-31-81
Synthetic Resins; Rubber; Proteins; Macromolecular Carbohydrates; Mixed Synthetic Resin Compositions; Synthetic
Resins With Natural Polymers and Resins; Reclaiming; Pore-Forming; Compositions (Part) e.g., Coating; Molding;
Ink; Prosthdontics; Adhesive and Abrading Compositions; Molding, Shaping, Treating Process, and Apparatus
Therefor; Irradiation (Part); Bleaching; Dyeing; Leather, Fur and Textile Treating Compositions.

COATING, LAMINATING AND PHOTOGRAPHY, GROUP 160—S. N. ZAHARNA, Director 1-15-82
Coating: Processes, Apparatus and Misc. Products; Laminating Methods and Apparatus; Stock Materials; Adhesive
Bonding; Special Chemical Manufactures; Special Utility Compositions; and Photography.

SPECIALIZED CHEMICAL INDUSTRIES AND CHEMICAL ENGINEERING, GROUP 170—
R. F. WHITE, Director 10-30-81
Fertilizers; Foods; Fermentation; Analytical Chemistry; Reactors; Sugar and Starch; Paper Making; Glass Manufac-
ture; Gas; Heating and Illuminating; Cleaning Processes; Liquid Purification; Distillation; Preserving; Liquid, Gas,
and Solid Separation; Gas and Liquid Contact Apparatus; Refrigeration; Concentrative Evaporators; Mineral Oils
Apparatus; Misc. Physical Processes.

ELECTRICAL EXAMINING GROUPS

INDUSTRIAL ELECTRONICS, PHYSICS AND RELATED ELEMENTS, GROUP 210—S. W. ENGLE, Director 2-13-81
Generation and Utilization; General Applications; Conversion and Distribution; Heating and Related Art Conductors;
Switches; Photography; Motion Pictures; Horology; Acoustics; Recorders; Weighing Scales.

SPECIAL LAWS ADMINISTRATION, GROUP 220—KENNETH L. CAGE, Director 3-20-81
Ordnance, Firearms and Ammunition; Lubrication; Illumination; Nuclear Reactors; Acoustics, Communications, Op-
tics; Radar; Directional Radio; Torpedoes; Seismic Exploring; Cathode Ray Tube Circuitry; Cryptography; Laser
Devices; Radioactive Materials; Powder Metallurgy, Rocket Fuels; Special, Fuel, Explosive and Thermic Composi-
tions; Thermal and Photoelectric Batteries.

INFORMATION TRANSMISSION, STORAGE, AND RETRIEVAL, GROUP 230—EARL LEVY, Director 11-24-80
Communications; Multiplexing Techniques; Television; Facsimile; Data Processing, Computation and Conversion;
Storage Devices and Related Arts.

RECEPTACLES, CLEANING, WINDING, AND MEASURING, GROUP 240—
G. M. FORLENZA, Director 1-09-81
Receptacles; Bearings; Joint Packing; Conduits; Switches; Presses; Plumbing Fixtures; Textile Spinning; Cleaning;
Food Treating; Agitating; Centrifugal Separating; Geometrical Instruments; Sound Recording; Image Projectors;
Web Feeding; Winding and Reeling; Cable Hoists; Measuring and Testing; Indicating; Fluent Material Handling;
Shaft; Impellers; Rotary Fluid Motors.

ELECTRONIC COMPONENT SYSTEMS AND DEVICES, GROUP 250—S. S. MATTHEWS, Director 11-26-79
Semi-Conductor and Space Discharge Systems and Devices; Electronic Component Circuits; Wave Transmission
Lines and Networks; Optics; Radiant Energy; Measuring.

DESIGN, GROUP 290—KENNETH L. CAGE, Director 1-05-81
Industrial Arts; Household, Personal and Fine Arts.

MECHANICAL EXAMINING GROUPS

HANDLING AND TRANSPORTING MEDIA, GROUP 310—B. R. GRAY, Director 2-26-81
Conveyors; Hoists; Elevators; Article Handling Implements; Store Service; Sheet Feeding; Dispensing; Fluid Sprin-
kling; Fire Extinguishers; Coin Handling; Check Controlled Apparatus; Classifying and Assorting Solids; Boats;
Ships; Aeronautics; Motor and Land Vehicles and Appurtenances; Brakes; Railways and Railway Equipment.

MATERIAL SHAPING, ARTICLE MANUFACTURING, TOOLS, GROUP 320—M. M. NEWMAN, Director 4-20-81
Manufacturing Processes, Assembling, Combined Machines, Special Article Making; Metal Deforming; Sheet Metal
and Wire Working; Metal Fusion-Bonding, Metal Founding; Machine Tools for Shaping or Dividing; Work and
Tool Holders, Woodworking; Tools; Cutlery; Jacks; Fishing, Etc.; Butchering; and Books and Printed Matter.

AMUSEMENT, HUSBANDRY, PERSONAL TREATMENT, INFORMATION, GROUP 330—
R. E. AEGERTER, Director .... 2-1[illegible]-80
Amusement and Exercising Devices; Projectors; Animal and Plant Husbandry; Plants; Harvesting; Earth Working and
Excavating; Tobacco; Artificial Body Members; Dentistry; Jewelry; Surgery; Toiletry; Printing; Typewriters; Infor-
mation Dissemination.

HEAT, POWER, AND FLUID ENGINEERING, GROUP 340—D. J. STOCKING, Director 11-17-80
Power Plants; Combustion Engines; Fluid Motors; Reaction Motors; Pumps; Rotary Engines and Pumps; Heat Gener-
ation and Exchange; Refrigeration; Ventilation; Drying; Temperature and Humidity Regulation; Couplings; Gearing;
Fluid Handling and Control; Lubrication.

GENERAL CONSTRUCTIONS, TEXTILES, MINING AND GEARING, GROUP 350—
A. L. SMITH, Director 9-17-80
Building Structures; Racks; Cabinets; Closures; Supports; Furniture; Fasteners; Locks; Pipe Couplings; Joints; Miscel-
laneous Hardware; Textiles; Sewing Machines; Apparel; Footwear; Earth Engineering; Earth Drilling; Mining;
Wells; Roads; Bridges; Tool Driving; Gearing; Machine Elements; Clutches.

Expiration of patents: The patents within the range of numbers indicated below expire during December 1982, except those which may have expired earlier due to shortened terms under the provisions of Public Law 690, 79th Congress, approved August 8, 1946 (60 Stat. 940) and Public Law 619, 83rd Congress, approved August 23, 1954 (68 Stat. 764), or which may have had their terms curtailed by disclaimer under the provisions of 35 U.S.C. 253. Other patents, issued after the dates of the range of numbers indicated below, may have expired before the full term of 17 years for the same reasons, or have lapsed under the provisions of 35 U.S.C. 151. .... Numbers 3,221,339 to 3,226,728, inclusive
Patents .... Numbers 2,577 to 2,584 inclusive
Plant Patents ....

REISSUES

FEBRUARY 15, 1983

Matter enclosed in heavy brackets [ ] appears in the original patent but forms no part of this reissue specification; matter printed in italics indicates additions made by reissue.

Re. 31,148

SUB-SEA EQUIPMENT TEST AND ISOLATION TOOL

John H. Mayo, 404 Alonda Dr., Lafayette, La. 70503

Original No. 4,152,924, dated May 8, 1979, Ser. No. 925,449, Jul. 17, 1978. Application for reissue Mar. 10, 1981, Ser. No. 242,247

Int. Cl.^{3} G01M *3/28*

U.S. Cl. 73—40.5 R **21 Claims**

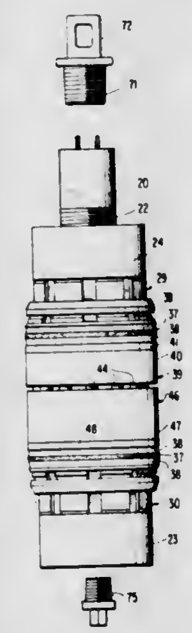

16. A test and isolation tool for sub-sea well equipment comprising a tool body portion adapted for insertion into a well head housing having spaced internal surfaces to be tested for leakage, spaced expandable testing seals on the body portion adapted to register with said surfaces, pressure-responsive means on the body portion operable to expand said seals into test sealing engagement with said surfaces, a first pressure fluid delivery means on the body portion delivering fluid to said pressure-responsive means at a pressure somewhat above test pressure and sufficient in magnitude to expand said seals to a degree enabling said surfaces to resist leakage under test pressure, and a second pressure fluid delivery means on the body portion separate from and isolated from the first delivery means and delivering fluid into a chamber of the body portion between said seals and surfaces at said test pressure.

Re. 31,149

APPARATUS FOR MONITORING CHEMICAL REACTIONS AND EMPLOYING MOVING PHOTOMETER MEANS

Guenter Ginsberg, Miami, Fla.; Thomas Horne, Harpenden, England, and Robert L. Kreiselman, Melbourne, Fla., assignors to Coulter Electronics, Inc., Hialeah, Fla.

Original No. 4,234,539, dated Nov. 18, 1980, Ser. No. 69,111, Aug. 23, 1979. Continuation of Ser. No. 846,337, Oct. 8, 1977, Pat. No. 4,234,538, which is a continuation-in-part of Ser. No. 808,166, Jun. 20, 1977, abandoned. Application for reissue Aug. 27, 1981, Ser. No. 296,778

Int. Cl.^{3} G01N *21/24, 1/14*

U.S. Cl. 422—64 **11 Claims**

1. Apparatus for monitoring chemical reactions occurring in a plurality of liquid or the like sample substances carried [in] *by* a plurality of respective [cuvettes whose walls are at least to some extent capable of transmitting] *sample support members and which produce an optical effect when exposed to* radiant energy which comprises,

A. a support structure,

B. a [horizontally disposed cuvette] *sample support member* carrier *disposed in a first plane and* having a plurality of [cuvettes] *sample support members* disposed thereon in a circular array around the periphery of the carrier and the array having a central [vertical] axis *normal to said first plane*, the [cuvette] *sample support member* carrier being nonrotatably mounted on the support structure,

C. a rotor [horizontally] disposed parallel with the [cuvette] *sample support member* carrier and mounted for rotation on the said axis,

D. a plurality of photometers arranged on said rotor and each including a photoresponsive element and there being radiant energy source means serving all of the photoresponsive elements and directing a [direct rectilinear] beam of radiant energy to each of them whereby there is at least one beam for each element, *each beam having a fixed orientation relative to its associated photoresponsive element that is maintained at all times during rotation of the*

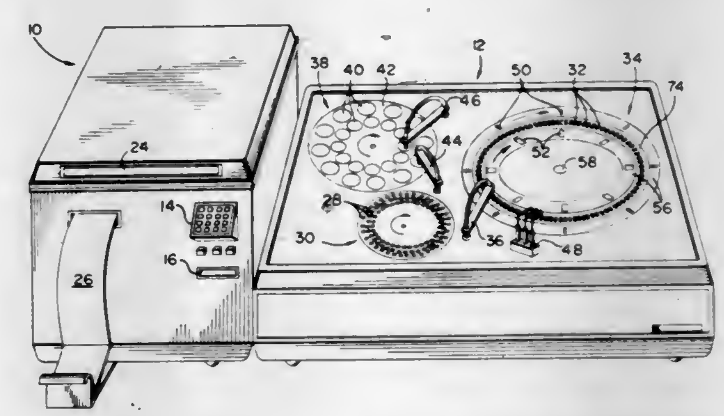

rotor, the source means and elements being geometrically arranged in a radial configuration around the rotor, and the beams being so located that each will [cut through] *be intercepted by* all of the [cuvettes] *sample support members* in sequence during rotation of the rotor,

E. means for driving the rotor in a rotary movement,

F. the photoresponsive elements being responsive to the beams to produce electrical signals when intercepted by [cuvettes] *sample support members*, the signals being related to the chemical conditions of sample substance, if any, carried by the respective [cuvettes] *sample support members*,

G. means for generating usable data from any such signals associated with said support structure and [non-rotatable,] *nonrotatable carrier* and

H. means for coupling the signals from the rotor to said last mentioned means.

Re. 31,150

APPARATUS FOR MONITORING CHEMICAL REACTIONS AND EMPLOYING MOVING PHOTOMETER MEANS

Guenter Ginsberg, Miami, Fla.; Thomas Horne, Harpenden, England, and Robert L. Kreiselman, Melbourne, Fla., assignors to Coulter Electronics, Inc., Hialeah, Fla.

Original No. 4,234,538, dated Nov. 18, 1980, Ser. No. 846,337, Oct. 28, 1977. Continuation-in-part of Ser. No. 808,166, Jun. 20, 1977, abandoned. Application for reissue Aug. 27, 1981, Ser. No. 296,780

Int. Cl.^{3} G01N *21/24, 1/14*

U.S. Cl. 422—64 **21 Claims**

1. Apparatus for monitoring chemical reactions occurring in a plurality of liquid or the like sample substantances carried [in] *by* a plurality of respective [cuvettes whose walls are at

least to some extent capable of transmitting] *sample support members, said sample substances and support members being capable of producing an optical effect when exposed to* radiant energy which comprises:

A. support means,

B. a rotor mounted on said support means for rotation thereon on an axis,

C. a turntable mounted coaxially with the rotor for rotation relative to said support means, a plurality of [radiant energy transmissive cuvettes] *sample support members* mounted to the turntable and disposed in a circular arrangement coaxially with said axis and adapted to have sample substances producing chemical reactions carried [in] *by* at least some of said [cuvettes] *sample support members,*

D. first drive means for rotating the turntable on its axis in a first program of rotation whereby the [cuvettes] *sample support members* describe an annular path as the turntable rotates,

E. second drive means for rotating the rotor on said axis in a second program of rotation in which the number of total revolutions of the rotor for a given period of time is greater than the number of revolutions of the turntable for the same period of time,

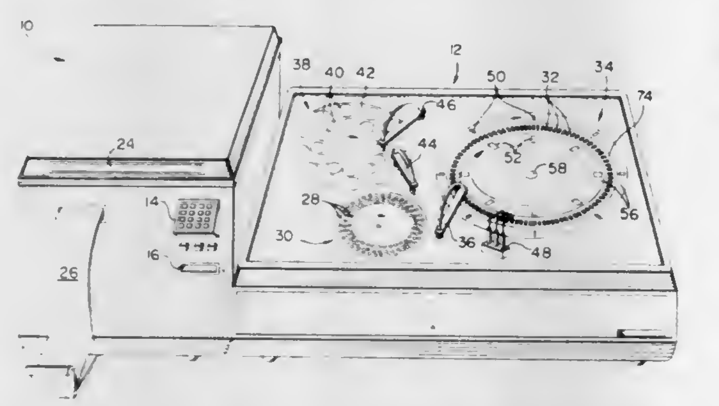

F. photometer means mounted on the rotor and defining at least one beam path for radiant energy which extends at least [through] *toward* said annular path such that the beam path includes and traverses at least a portion of the sample substance which may be contained in any of said [cuvettes] *sample support members* which intersects such beam path during rotation of the turntable *will be exposed to said beam when so intersected and produce an optically changed beam leaving said sample support member,*

G. the photometer means including means responsive to any radiant energy projected along said beam path to produce electrical signals as the [cuvettes] *sample support members* intersect the beam path, which signals are related to chemical conditions of the sample substances, if any, which may be contained in said [cuvettes] *sample support members,* there being two radiant energy detectors and means for dividing the beam path into two parts and directing the parts through different strata of the [cuvettes] *sample support members,*

H. means for generating usable data from any such signals, and

I. means for coupling at most all of the electrical signals from said photometer means to said data generating means.

Re. 31,151
INEXPENSIVE SOLAR CELL AND METHOD THEREFOR

William J. King, 9 Putnam Rd., Reading, Mass. 01867

Original No. 4,086,102, dated Apr. 25, 1978, Ser. No. 749,776, Dec. 13, 1976. Application for reissue Apr. 7, 1980, Ser. No. 137,911

Int. Cl.³ H01L *31/06, 31/18*

U.S. Cl. 136—256 **17 Claims**

1. A solar cell comprising a semi-conductor device including a rectifying junction and having a front surface, electrically conductive members in contact with said surface, and a layer of hermetic material hermetically bonded to said front surface and to at least as much of the edge surfaces as is necessary to cover said junction, thereby protecting said junction, said

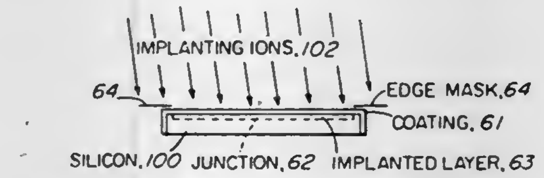

material having an index of refraction and a thickness approximating theoretically calculated values for perfect antireflective [[(AR)]] coating.

Re. 31,152
ALARM BUZZER

Mitsuo Sakaguchi; Hikoji Iwasaki, and Shigeo Shimoya, all of Tokyo, Japan, assignors to Kobishi Electric Co., Ltd., Japan

Original No. 4,075,626, dated Feb. 21, 1978, Ser. No. 765,466, Feb. 4, 1977. Application for reissue Jun. 11, 1979, Ser. No. 47,091

Claims priority, application Japan, Nov. 11, 1976, 51-151613[U]; Nov. 11, 1976, 51-151614[U]; Nov. 11, 1976, 51-151615[U]

Int. Cl.³ G10K *1/00*

U.S. Cl. 340—388 **17 Claims**

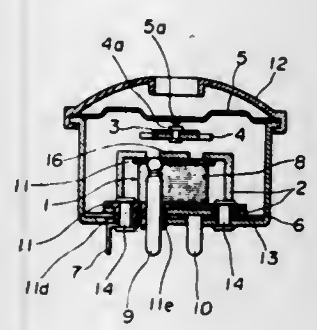

1. An alarm buzzer comprising an electromagnet, a yoke on which said electromagnet is mounted while maintaining insulation from a housing, an armature which is held with a plate spring on said yoke and is attracted by said electromagnet, a vibratory plate which contacts said armature, and a housing which incorporates the above components wherein a bobbin of said electromagnet is made of an insulating material and consists of a hollow cylinder which receives an iron core in it and is wrapped with coil on its outer periphery, first flange provided on one end of said hollow cylinder, second flange provided on the other end of the hollow cylinder and at least one hollow projection provided on said second flange in a direction parting from said first flange, said yoke is provided with at least one hole into which said hollow projections of the bobbin is inserted, and the bobbin and the yoke are fixed to the housing of the alarm buzzer by a fixture which is inserted into the hollow projection of the bobbin inserted into said hole of the yoke.

Re. 31,153
MASS MEMORY ACCESS METHOD AND APPARATUS

Richard W. Caddell, Brookfield, Wis., assignor to Kearney & Trecker Corporation, Milwaukee, Wis.

Original No. 4,198,699, dated Apr. 15, 1980, Ser. No. 16,149, Mar. 1, 1979. Application for reissue Sep. 2, 1980, Ser. No. 183,352

Int. Cl.³ G11C *13/00*

U.S. Cl. 365—230 **6 Claims**

5. Apparatus for transferring digital data between a mass memory having a plurality of storage loops, with each storage loop having "N" cells each accepting a data bit; and

having a loop position counter for indicating which cell in said loop is operative to receive or transmit data; and

a random access memory having an address counter therewith having "N" steps in the counting cycle, said apparatus comprising:

a transfer counter means having "N" counting steps in its counting cycle;

first circuit means coupled to said random access memory and to said mass memory for (a) selecting a unique one of said plurality of mass memory loops, (b) determining the cell position in said selected loop, and (c) indicating the data that is to be transferred between said random access memory and said selected loop of said mass memory;

second circuit means coupled to said transfer counter, to said random access memory address counter, and to said first circuit means for resetting said transfer counter and for adjusting said random access memory address counter in accordance with the loop cell position determined by said first circuit means; and

third circuit means coupled to said first circuit means, to said random access memory, and to said mass memory for repetitively (a) advancing the loop position (b) advancing the count of said transfer counter means, and (c) transferring data between said selected loop of said mass memory and said random access memory each time said first circuit means

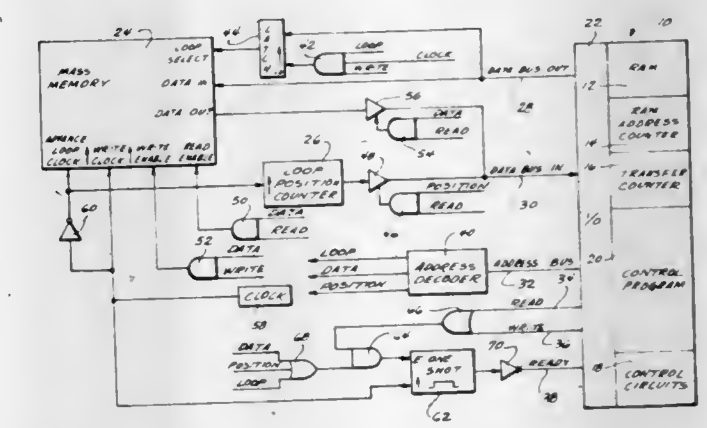

indicates that data is to be transferred between said random access memory and said mass memory until said transfer counter means overflows.

PLANT PATENTS

GRANTED FEBRUARY 15, 1983

Illustrations for plant patents are usually in color and therefore it is not practicable to reproduce the drawing.

4,982
ROSE PLANT
Gerardus J. C. Duivenvoorden, Leidsemeerstraat 18, Buitenkaag, Netherlands
Filed Jan. 12, 1981, Ser. No. 224,623
Int. Cl.³ A01H *5/00*

U.S. Cl. Plt.—25 **1 Claim**

1. An asexually-reproduced rose plant of the Floribunda class, substantially as herein illustrated and described, namely, a sport of the Merko variety, and characterized particularly in the light pink coloration of its blooms, in addition to the abundance of its blooms, even though usually borne singly.

4,983
SEEDLING ROSE NAMED HILSET
Robert G. Jelly, Richmond, Ind., assignor to E. G. Hill Co., Inc., Richmond, Ind.
Filed Aug. 14, 1981, Ser. No. 292,887
Int. Cl.³ A01H *5/00*

U.S. Cl. Plt.—26 **1 Claim**

1. A new and distinct rose plant, substantially as herein shown and described, characterized by its free and abundant production of light pink flowers and its moderately free and vigorous growth habit.

PATENTS

GRANTED FEB. 15, 1983

ERRATA

For CLASS	See PATENT NO.
445–003	4,373,237
464–048	4,373,358
184–006	4,373,421
186–064	4,373,611
414–225	4,373,840
436–539	4,373,931
436–501	4,373,932
118–103	4,373,985
436–060	4,374,041
523–153	4,374,059
436–546	4,374,120
372–092	4,374,365

PATENTS

GRANTED FEBRUARY 15, 1983

GENERAL AND MECHANICAL

4,373,211
PROTECTIVE CHEST SHIELD
Noel Goudreau, Bourbonnais; Nick Colevris, Bradley, and Carl Southard, Bourbonnais, all of Ill., assignors to Trico Products Incorporated, Bradley, Ill.
Filed Jul. 23, 1981, Ser. No. 285,959
Int. Cl.³ A41D *13/00*
U.S. Cl. 2—2 **9 Claims**

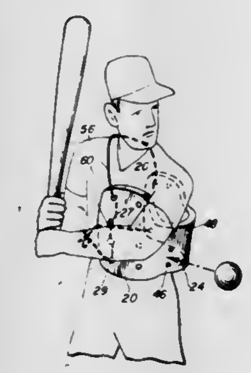

1. A protective chest shield comprising: a uniform cushion sheet of polyvinyl chloride closed cell foam being adapted for positioning adjacent to a wearer's body, a uniform rigid sheet of polypropylene secured to the sheet of polyvinyl chloride foam and being substantially co-extensive therewith, said rigid sheet and said cushion sheet having aligned apertures extending therethrough, each aperture having its outer periphery in the cushion sheet aligned with its outer periphery in the portion of the rigid sheet adjacent to the cushion sheet, a shoulder strap connected to the cushion sheet and to the rigid sheet for supporting the cushion sheet and the rigid sheet, and a chest strap connected to opposite ends of the cushion sheet and the rigid sheet for holding the cushion sheet adjacent to the wearer's chest.

4,373,212
LIGHT BLOCKING LENS FOR WELDER HELMET
John C. West, Minneapolis, Minn., assignor to Century Mfg. Co., Minneapolis, Minn.
Filed Nov. 12, 1980, Ser. No. 206,025
Int. Cl.³ A61F *9/06*
U.S. Cl. 2—8 **1 Claim**

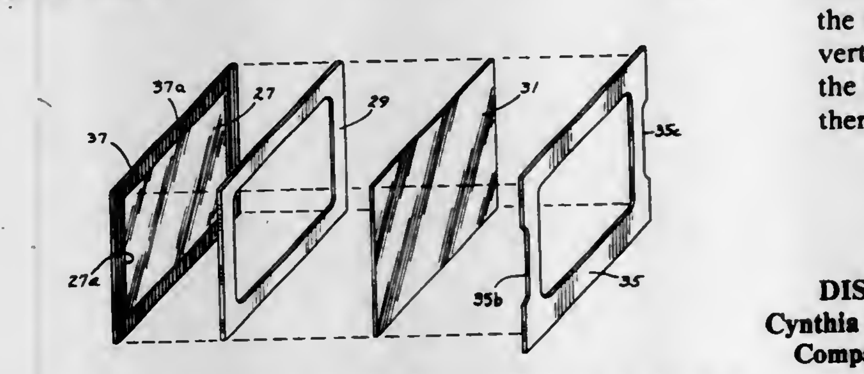

1. A welding helmet arranged and constructed to avoid a halo effect within the face shield thereof, having in combination

a face shield of a welding helmet,
a sight opening within said face shield,
a flange extending inwardly of said sight opening forming the perimeter thereof,
a lens disposed within said sight opening having its edge portions bearing against said flange,
said lens having the entire edge portion thereabout caused to be impervious to the passage of light,
a filter lens underlying said first mentioned lens,
a spacer disposed between said first and second mentioned lenses,
inward projections formed at each side edge portion of said sight opening inwardly thereof, and
a spring-like frame member engaging said projections with its respective end portions and being biased outwardly of said filter lens by said projections and being snapped inwardly against said filter lens for positive engagement of said edge portion of said first mentioned lens against said flange.

4,373,213
ARCHERY ARM GUARD
Roger S. Erlandson, 8600 Rubio Dr., Elk Grove, Calif. 95624
Filed Jan. 16, 1981, Ser. No. 225,472
Int. Cl.³ A41D *13/08;* **A63B** *57/00*
U.S. Cl. 2—16 **7 Claims**

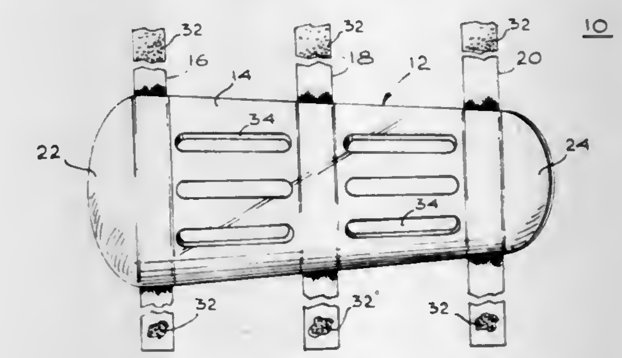

1. An improved archery arm guard, said guard comprising, in combination:
a. an elongated, curved, protective, smooth surfaced, self-supporting, rigid plastic body having a plurality of air holes, said body defining a plurality of passageways extending therethrough; and,
b. a plurality of parallel elastic stretchable bands slideably disposed in said passageways and extending outwardly therefrom for releasably securing said body to an archer's arm to protect against bowstring slap, said body being curved transversely to fit the contour of an archer's arm, the rear end thereof being curved down to prevent inadvertent hooking of the bowstring under said rear end and the front end thereof being curved up to prevent binding thereof against an archer's wrist.

4,373,214
DISPOSABLE GARMENT WITH CARD POCKET
Cynthia A. Wichman, St. Charles, Ill., assignor to The Kendall Company, Boston, Mass.
Filed Apr. 22, 1982, Ser. No. 371,026
Int. Cl.³ A41B *13/10*
U.S. Cl. 2—51 **9 Claims**

1. A disposable garment, comprising:
a gown having a pair of sleeves, a front, a pair of side margins defining an open back for the gown, and a pocket having a pair of opposed closed sides, with one end of the pocket being closed, and the other end of the pocket being open;
a first belt having one end secured to the gown and the other end being free;
a second belt having one end secured to the gown; and

a transfer card having one end received in the pocket through the open other pocket end, and means for releas-

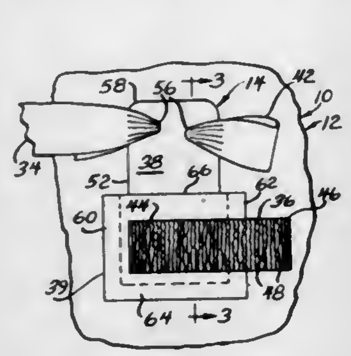

ably attaching the other end of the first belt adjacent the other end of the card.

4,373,215
DOUBLE SOCK CONSTRUCTION
Paul A. Guigley, Mohnton, Pa., assignor to Wm. G. Leininger Knitting Company, Mohnton, Pa.
Filed Jun. 19, 1980, Ser. No. 160,966.
Int. Cl.³ A41B *11/00*
U.S. Cl. 2—239 **5 Claims**

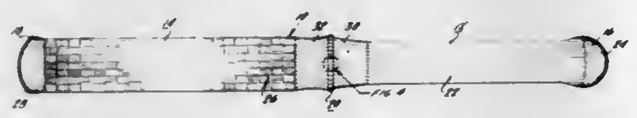

1. A double sock comprising an integral knit structure comprising an inner sock and an outer sock circumferentially joined at their respective ends, said inner sock having a tubular body portion, a closed toe portion at the free end of said inner sock body portion, said toe portion being of a reduced thickness with respect to said body portion, an outer sock having a tubular body portion of larger diameter than said inner sock body portion, a toe portion at the free end of said outer sock body portion, said outer sock toe portion being of a reduced thickness with respect to said outer sock body portion, the juncture of said inner and outer socks comprising a knitting structure forming a welt to establish a circumferential fold line at the upper end of said double sock, said inner sock being substantially shorter in length than said outer sock, the knitting structure of said inner and outer socks including stretch yarns which permit a resilient conformance thereof with the foot of a wearer.

4,373,216
HEART VALVES HAVING EDGE-GUIDED OCCLUDERS
Jerome J. Klawitter, Austin, Tex., assignor to Hemex, Inc., Austin, Tex.
Continuation-in-part of Ser. No. 200,910, Oct. 27, 1980, abandoned. This application Sep. 15, 1981, Ser. No. 302,693
Int. Cl.³ A61F *1/22*
U.S. Cl. 3—1.5 **25 Claims**

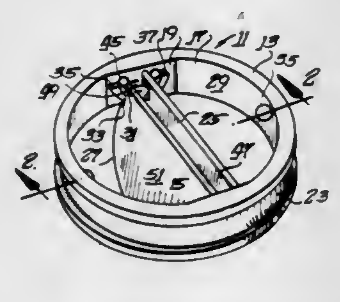

1. A heart valve prosthesis for allowing blood flow therethrough in a specific direction including
a generally annular valve body having an interior surface defining a central passageway for blood flow therethrough,
occluder means for blocking the flow of blood through said passageway, said occluder means having an upstream face and a downstream face,
notches extending through said occluder means between said upstream face and said downstream face and being formed in opposite locations in the periphery of said occluder means,
complementary projections which are elongated generally in a direction between upstream and downstream and of a length substantially greater than the thickness of said occluder means at said notch, which extend generally radially inward from said interior surface into said passageway and which are proportioned to interfit within said notches, said projections being exposed to free flow of blood and having opposite elongated surfaces that are alternately mechanically contacted by edges of said notches during alternate opening and closing movement, the shape of said projections being such to guide said occluder means along a path during shifting between open and closed positions that creates both pivotal and translational movement,
first means in said annular valve body for engaging said upstream face of said occluder means and providing a stop in the closed position, and
second means in said annular valve body for engaging said downstream face of said occluder means and providing a stop in the open position.

4,373,217
IMPLANTATION MATERIALS AND A PROCESS FOR THE PRODUCTION THEREOF
Klaus Draenert, Ottobrunn, Fed. Rep. of Germany, assignor to Merck Patent Gesellschaft mit Beschränkter Haftung, Darmstadt, Fed. Rep. of Germany
Filed Feb. 15, 1980, Ser. No. 121,772
Claims priority, application Fed. Rep. of Germany, Feb. 16, 1979, 2905878
Int. Cl.³ A61F *1/00;* **C08L** *3/08, 3/10;* **C08K** *3/32*
U.S. Cl. 3—1.9 **17 Claims**

1. An implantation material comprising a polymeric base of a polyacrylate, a polymethacrylate, a copolymer of an acrylate and a methacrylate or a mixture thereof and 5–35% by weight of resorbable tricalcium phosphate of a particle size of 50–300 μm and an available pore volume of less than 0.1 ml/g.

16. A method of treating bone defects requiring implantation of a bone cement in a bone of a patient, comprising implanting the implantation material of claim 1 in a bone of the patient.

4,373,218
VARIABLE POWER INTRAOCULAR LENS AND METHOD OF IMPLANTING INTO THE POSTERIOR CHAMBER
Ronald A. Schachar, 1020 Highway 75 North, Denison, Tex. 75020
Filed Nov. 17, 1980, Ser. No. 207,638
Int. Cl.³ A61F *1/16, 1/24*
U.S. Cl. 3—13 **37 Claims**

1. A posterior chamber intraocular lens for an eye comprising:
a fluid-expandable sac constructed of flexible, transparent material for containing fluid and dimensioned for occupying the posterior chamber of the eye when expanded with fluid in place of at least a portion of the natural lens; and
valve means connected to said sac for extending through the sclera of the eye for selectively varying the optical characteristics of the fluid within said sac in order to vary the optical characteristics of the wearer's eye while said sac is in the wearer's eye.

23. A method for removing a natural lens from an eye and for implanting into the eye a posterior chamber intraocular lens comprising:
(a) inserting an insertion member through the sclera of the eye and into the posterior chamber;

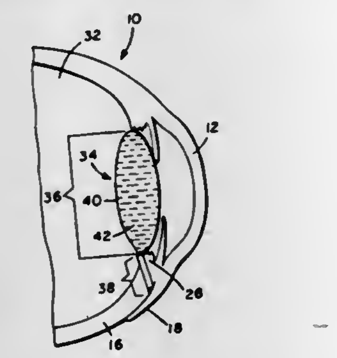

(b) inserting a collapsible, fluid-expandable sac constructed of flexible transparent material through said member and into the posterior chamber; and
(c) instilling a fluid into said sac for filling said sac in order to provide an artificial lens.

4,373,219
CAST TOILET BASE STRUCTURE
Louis A. Garasi, Canyon Country, and Ronald F. Hayes, Northridge, both of Calif., assignors to Gruber Systems, Inc., Valencia, Calif.
Division of Ser. No. 138,209, Apr. 7, 1980, Pat. No. 4,328,179. This application May 1, 1981, Ser. No. 259,417
Int. Cl.³ E03D *1/00, 3/00, 5/00*
U.S. Cl. 4—300 **9 Claims**

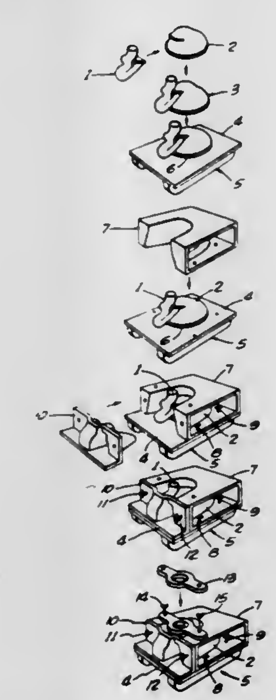

1. A toilet base including an organic plastic bowl and an organic plastic trap that are fixed within and surrounded by thermoset organic plastic that forms the exterior of said toilet base whereby said toilet base is substantially all cast, thermoset organic plastic that forms the structure of said toilet base without need of a separate outer plastic shell.

4,373,220
POOL WATER LEVEL MAINTENANCE APPARATUS AND METHOD
Walter T. Selsted, 22385 Rancho Deep Cliff Dr., Cupertino, Calif. 95014
Filed Jan. 26, 1981, Ser. No. 228,598
Int. Cl.³ F16K *1/18*
U.S. Cl. 4—508 **6 Claims**

1. Control apparatus for the level of water in a pool that is equipped with a water-circulating pump, the control apparatus comprising:
control tank means having an inlet port and a drain port which is disposed to be positioned at a selected elevation above a desired level of water in the pool;
first valve means positioned to supply water to the control tank means up to the desired level from a source of water under pressure; and
second valve means coupled to the control tank means at a level below the desired level and to the inlet of the water-

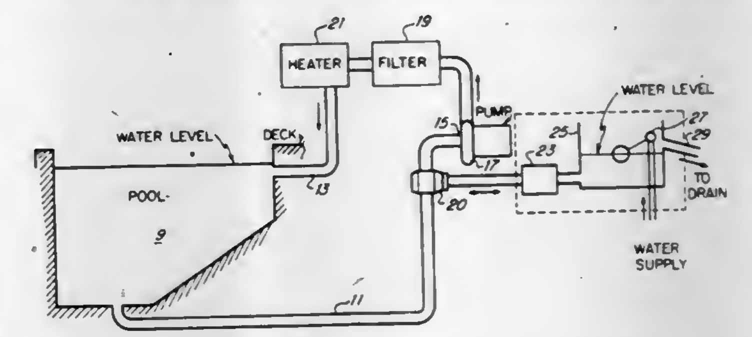

circulating pump for the pool, said second valve being biased normally open and being disposed to close in response to lower pressure on the side thereof coupled to the inlet of the water-circulating pump for permitting selective filling and draining of the pool through the second valve means only while the water-circulating pump of the pool is not operating.

4,373,221
BATHTUB SAFETY SUPPORT
Ruth I. Wilson, 1550 S. Baldwin, Lake Orion, Mich. 48035
Filed Jun. 23, 1980, Ser. No. 161,771
Int. Cl.³ A47K *3/00, 3/02, 3/024, 3/022*
U.S. Cl. 4—559 **7 Claims**

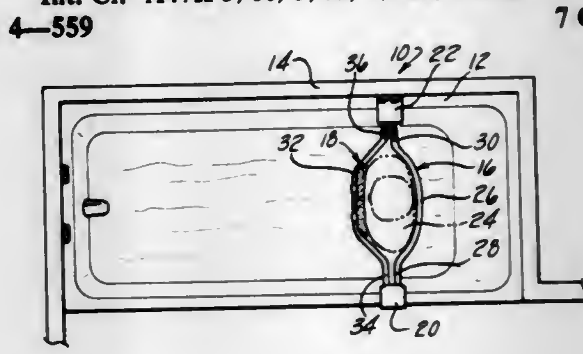

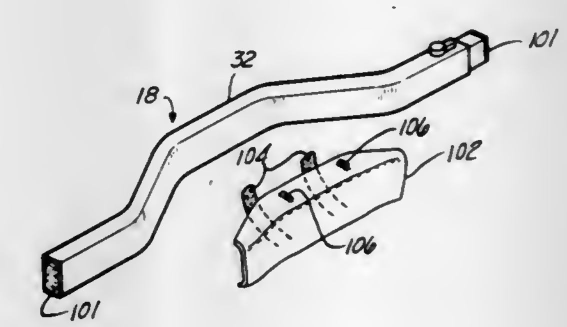

1. An apparatus for holding a person's body in a substantially upright sitting position while bathing in a tub comprising:
a support bar having a curved central portion intermediate two straight end portions;
first selectively engageable means for supporting said end portions between opposing side walls of the tub at one of at least a plurality of predetermined heights and horizontal positions; and
second means for limiting displacement of a person's body away from said curved central portion; wherein said first means comprises at least one bracket having means for securing said bracket to a side wall of said tub, and bracket

means for slidably receiving at least a portion of each of said two straight end portions at any of said plurality of predetermined heights.

4,373,222
PROSTHETIC BENCH
Richard M. Wolfe, and Katharine N. Dixon, both of Columbus, Ohio, assignors to Enhancement Systems, Inc., Los Angeles, Calif.
Filed Jan. 28, 1980, Ser. No. 115,951
Int. Cl.³ A61G *7/06;* A47C *11/00, 20/04*
U.S. Cl. 5—431 **7 Claims**

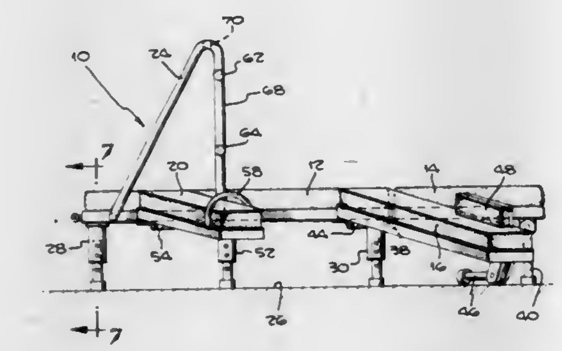

1. A bench adapted to be used for sexual activity comprising: platform means for supporting a human body in the supine position including an elongated surface adapted to extend generally horizontally, an extension of said elongated surface projecting from one end thereof and being angularly downwardly adjustable relative to said elongated surface to support the lower portion of the legs of said human body in a lowered position, leg cradle means projecting angularly outwardly from said surface for adjustably supporting the lower extremities of said human body in a spread eagle position, said leg cradle means being adjustable relative to said elongated surface, arm cradle means projecting angularly outwardly from said surface for cradling the arms of said human body, said arm cradle means being angularly adjustable relative to said elongated surface; and
frame means extending upwardly over said surface for grasping by the hands of a person using said bench.

4,373,223
CONTAINER OPENER
Lester Miller, Hopkins, Mich., assignor to Mildoy Enterprises, Hopkins, Mich.
Filed Jan. 29, 1980, Ser. No. 116,566
Int. Cl.³ B25F *1/00;* B67B *7/44*
U.S. Cl. 7—151 **10 Claims**

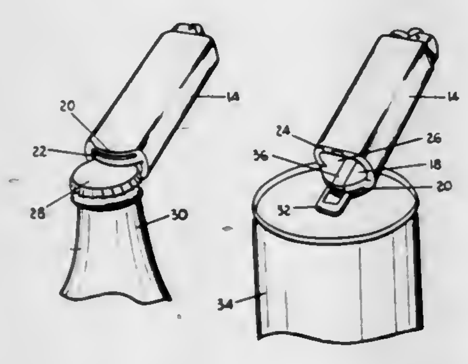

1. A combination container opener and lighter case comprising an elongated body having an internal hollow chamber with an opening at one end of the body such that a disposable lighter may be inserted longitudinally into the chamber, and further having a slot on the body such that a tab of a tab-top container will fit in the slot and the container can be opened by pivoting the opener relative to the container with the tab in the slot, the slot comprising a longitudinal opening at the end of the body opposite the opening for the lighter, a portion of the container opener at one edge of the slot fitting under the tab such that the tab can be slipped into the slot to open the container, the container opener further comprising crown cap removal means for removing a crown cap from a container, the crown cap removal means being located in a recessed opening at the end of the body opposite the one end in which the lighter is mounted, the crown cap removal means comprising a fulcrum portion on one side of a wall extending around the recessed opening and a prying portion on the opposite side of the wall of the recessed opening, with the prying portion including an inwardly extending raised lip on the inside surface of the wall, the fulcrum and prying portions being formed such that the opener may be placed on a crown cap in such a manner that the raised lip engages a bottom edge of the crown portion of the crown cap and the fulcrum portion engages, and extends partially across, the top surface of the crown cap such that when the opener is pivoted upwardly with respect to the container, the crown cap is removed.

4,373,224
METHOD FOR MANUFACTURING A DUSTER AND THE DUSTER MANUFACTURED THEREFROM
Shinji Bandai, Kawanishi; Masao Kajimaki, Ibaragi; Yoshihiro Nakajima, Osaka; Akira Yagi, Takatsuki, and Haruo Nishimura, Osaka, all of Japan, assignors to Duskinfranchise Kabushiki Kaisha, Osaka, Japan
Filed Apr. 21, 1981, Ser. No. 256,254
Int. Cl.³ A47L *13/40*
U.S. Cl. 15—1.5 A **7 Claims**

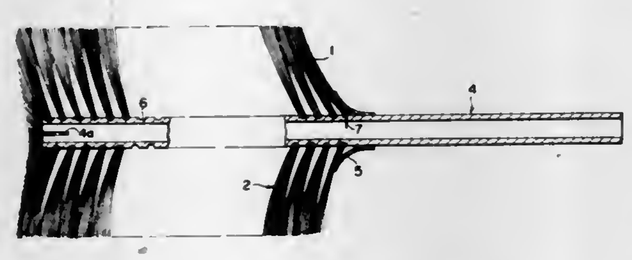

1. A method for manufacturing a duster, comprising the steps of:
(a) providing a film consisting of a blend of isotactic polypropylene and polyethylene polymers, said blend being of a weight ratio in the range 95:5 to 70:30, and substantially elongating the film;
(b) treating the elongated film by a corona charge sufficiently to create an electret state in said elongated film;
(c) splitting the elongated film into a plurality of rows of ribbon-like fibers;
(d) crimping the fibers without substantially eliminating the electret state; and
(e) attaching said plurality of rows of crimped ribbon-like fibers to a duster stem.

4,373,225
PIPING VALVE WITH A HOUSING FOR THE TRANSFER OF A WIPER INSERTABLE IN CONDUITS THAT SUPPLY PRESSURIZED VISCOUS MATERIAL, PREFERABLY CONCRETE
Karl-Ernst v.Eckardstein, Kamen; Werner Fiala, and Friedrich Schwing, both of Herne, all of Fed. Rep. of Germany, assignors to Friedrich Wilh. Schwing, GmbH, Herne, Fed. Rep. of Germany
Filed Jul. 1, 1980, Ser. No. 165,140
Claims priority, application Fed. Rep. of Germany, Jul. 6, 1979, 2927324; Oct. 31, 1979, 2943967
Int. Cl.³ B08B *9/04*
U.S. Cl. 15—104.06 A **11 Claims**

1. A piping element inserting a wiper in a pressurized viscous

material conveying conduit means for cleansing movement through the conduit means responsive to forces exerted by a pressure source, said piping element being interposed in said conduit means and including: a transmission pipe (8) coupled to the conduit means (1) and reciprocally movable between a first position in which said pipe is aligned with the conduit means for permitting the conveyance of viscous material through the

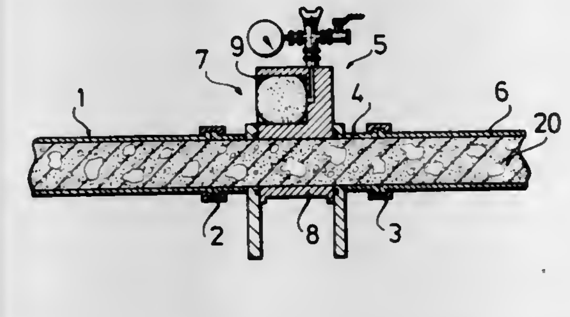

conduit means and a second position in which said transmission pipe is out of alignment with the conduit means; and a chamber (9) accommodating the wiper, said chamber being coupled to said transmission pipe and alignable with the conduit means by the reciprocal movement of said transmission pipe, said chamber having connection means (11, 15) couplable to the pressure source for exerting forces on the wiper moving the wiper into and through the conduit means.

4,373,226
CLEANING DEVICE FOR A HUNG FABRIC
Klaus Lübnitz, Borsigstr. 8, 3180 Wolfsburg 1, Fed. Rep. of Germany
Filed Sep. 3, 1981, Ser. No. 298,950
Claims priority, application Fed. Rep. of Germany, Sep. 12, 1980, 3034399
Int. Cl.³ A47L *5/38*
U.S. Cl. 15—302 **15 Claims**

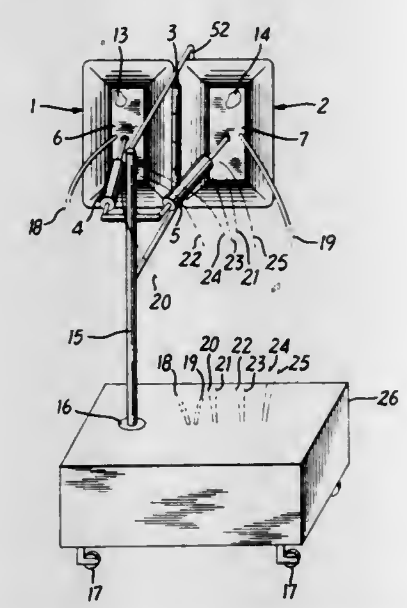

1. A cleaning device for hung fabric and the like comprising a pair of adjacent cleaning flaps, each having an outer wall, an inner wall, and a fluid distribution chamber between the inner and outer walls, hinge means for pivoting said cleaning flaps between a closed position, in which said inner walls are folded together to define a cleaning chamber for tightly retaining a portion of said fabric between said cleaning flaps, and an open position for releasing said fabric, and means for selectively delivering and discharging a plurality of fluids to and from said fluid distribution chambers, wherein each said inner wall has nozzle means communicating with said fluid distribution chambers for delivering and discharging said fluids through said inner wall to and from the fabric.

4,373,227
SURFACE MAINTENANCE EQUIPMENT
Paul W. Kimzey, St. Louis Park, and Sherman B. Frederick, New Hope, both of Minn., assignors to Tennant Company, Minneapolis, Minn.
Filed Sep. 9, 1980, Ser. No. 185,879
Int. Cl.³ E01H *1/08*
U.S. Cl. 15—347 **8 Claims**

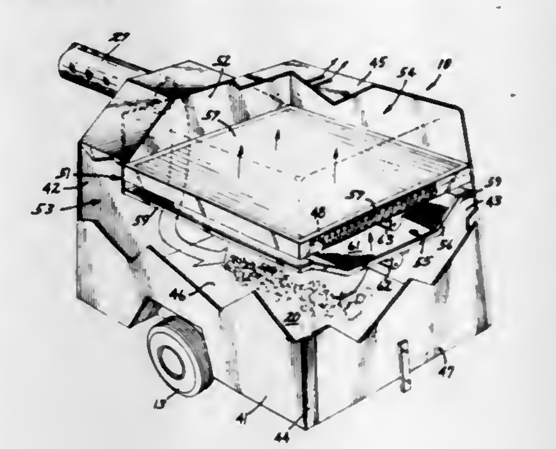

1. Surface maintenance equipment comprising a body structure supported on a plurality of wheels, a downwardly opening housing defining a pickup chamber, means for storage of dirt and debris, means for moving an airstream through said equipment to assist in transporting debris from said pickup chamber to said storage means, and a filtering assembly for cleaning said airstream before discharge, said filtering assembly including a first screen filter for removing larger airborne debris and a second filter for removing fine dust particles from said airstream, said first screen filter including vibration imparting mechanism for dislodgement of said larger debris and said second filter including vibration imparting mechanism for dislodgement of dirt and debris therefrom.

4,373,228
VACUUM CLEANING APPLIANCES
James Dyson, Sycamore House, Bathford, Bath, Avon, BA1 7RS, England
Filed Apr. 15, 1980, Ser. No. 140,497
Claims priority, application United Kingdom, Apr. 19, 1979, 7913690
Int. Cl.³ A47L *9/16*
U.S. Cl. 15—350 **8 Claims**

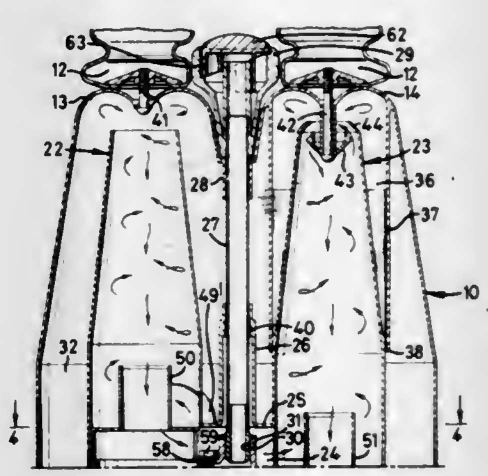

1. A vacuum cleaning device convertible alternately, into an upright cleaning appliance and into a cylindrical tank type appliance, said appliance comprising a suction head adapted to be moved over a surface to be cleaned when the appliance is in its upright mode, a first housing having one end pivotally connected to said suction head and having an opposite end, a second housing having a first end fixed to said opposite end of the first housing, a pair of frusto-conically shaped cyclones

disposed side by side and enclosed by said second housing, each of said cyclones having a first open end facing said first housing and a larger opposite end, a flexible hose connecting said suction head with one of said frusto-conical cylones for flow of air into the said frusto-conical cyclone, means connecting said side-by-side cyclones for flow of air therebetween, a motor and fan assembly disposed in said first housing for sucking air into said suction head and into said flexible hose, means disposed above each of said first open ends of the frusto-conically shaped cyclones within the said second housing comprising an inverted conically shaped member disposed above the smaller open end of each of the cyclones with its apex facing said smaller open end to interrupt flow of air through the said smaller open end and intercept suspended solids in the air, means comprising third and fourth housings disposed around the cyclones for directing intercepted solids falling from the air towards the first suction head and into a receptacle therefor, means on the first housing for rollably supporting the appliance in its upright mode, and a rotary brush supported across said suction head to contact said surface as the appliance in its upright mode is moved over the surface to be cleaned,

means for moving the applicance in its upright mode comprising a pair of wheels rotatably mounted on said first housing;

means fixed to said second housing for lifting and moving the appliance while in its cylindrical tank type mode.

4,373,229

FASTENING SYSTEM FOR ASSIST STRAPS AND THE LIKE

Ronald D. Moore, Grosse Pointe, Mich., assignor to Chivas Products, Limited, Sterling Heights, Mich.

Filed Jun. 5, 1980, Ser. No. 156,602

Int. Cl.^{3} A47B *95/02*

U.S. Cl. 16—125 8 Claims

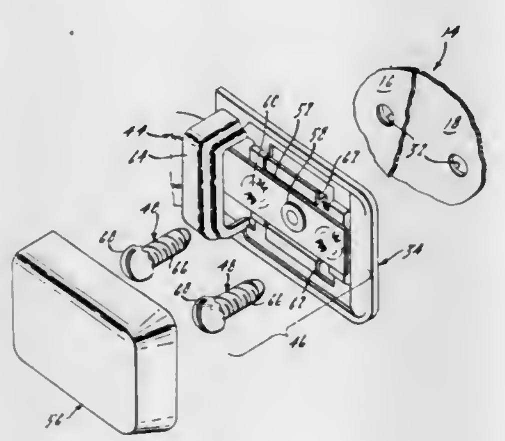

8. A fastening system for fastening assist straps and the like to a panel or other member comprising:

a metal band extending through the length of said assist strap having an end;

a threaded fastener having a first surface which engages said end of said metal band to fasten said assist strap, said first surface having recesses and peaks;

said end of said metal band being formed by stamping to provide a second surface which engages said first surface of said fastener, said second surface having recesses and peaks which are correlative to said peaks and recesses, respectively, of said fastener so that the peaks of one of said surfaces reside in the recesses of the other of said surfaces when said surfaces are engaged.

4,373,230

FOUR-JOINT HINGE

Karl Lautenschläger, Reinheim, Fed. Rep. of Germany, assignor to Karl Lautenschläger KG, Möbelbeschlagfabrik, Reinheim, Fed. Rep. of Germany

Filed Aug. 5, 1981, Ser. No. 290,229

Claims priority, application Fed. Rep. of Germany, Sep. 8, 1980, 3033713

Int. Cl.^{3} E05F *1/08, 5/02*

U.S. Cl. 16—288 8 Claims

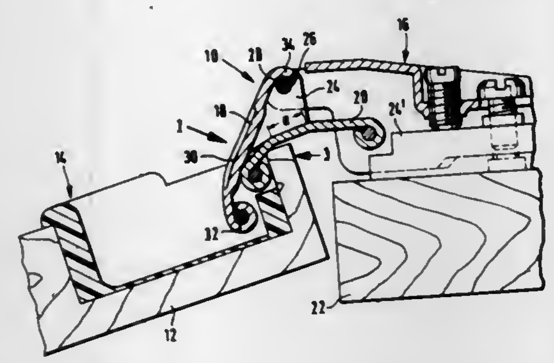

1. A hinge for a cabinet door, comprising: two hinge links pivotingly articulated in the manner of a four-joint hinge, each at one end to a door-related hinge part adapted to be fastened to the cabinet door and each at the other end to a supporting-wall related hinge part adapted to be fastened to a supporting wall of a cabinet, one of said hinge links having at an end portion adjacent the supporting-wall related part two ears bent over at right angles in the direction toward the other hinge link, said ears being of such shape and size that their free edges flatly rest over at least a portion of their length on areas of a confronting flat side of the other hinge link when the cabinet door is in its widest-open position.

4,373,231

APPARATUS FOR CUTTING CONNECTING PORTIONS OF A SAUSAGE CHAIN

Tetsuro Mano, Tokyo, Japan, assignor to Totai Co., Ltd., Tokyo, Japan

Filed Dec. 31, 1980, Ser. No. 221,573

Claims priority, application Japan, Mar. 13, 1980, 55/32093; Mar. 13, 1980, 55/33090[U]

Int. Cl.^{3} A22C *11/00*

U.S. Cl. 17—1 F 6 Claims

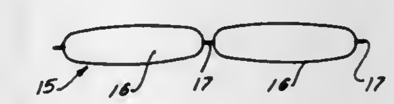

1. Apparatus for cutting the connecting portions between sausages forming a sausage chain, said apparatus being adopted for use with sausage chains formed of sausage having a longitudinally curved configuration, said apparatus comprising a sausage position correcting means arranged in the form of an arc, a sausage guide means, a driving drum arranged for receiving sausages transferred through said guide means, said guide means comprising pairs of rollers each disposed in a direction perpendicular to the circumferential surface of the driving drum, the rollers of successive pairs thereof being arranged so that the spacing between the rollers in each pair gradually decreases in the direction of travel of the sausage chain with the drum, a pressing means arranged to face the sausage receiving surface of said driving drum, and a cutter mechanism for cutting the connecting portions of the sausage chain, the cutter mechanism being arranged along the sausage conveyance path of said driving drum, the sausage position correcting means comprising idling rollers which are arranged in a laterally extending manner along the circumference of the driving drum.

4,373,232

POULTRY CUTTING MACHINE

Robert R. Harding, Livingston, and Walter L. Stuermer, Modesto, both of Calif., assignors to Foster Poultry Farms, Livingston, Calif.

Filed Jan. 28, 1981, Ser. No. 229,154

Int. Cl.^{3} A22C *21/00*

U.S. Cl. 17—11 6 Claims

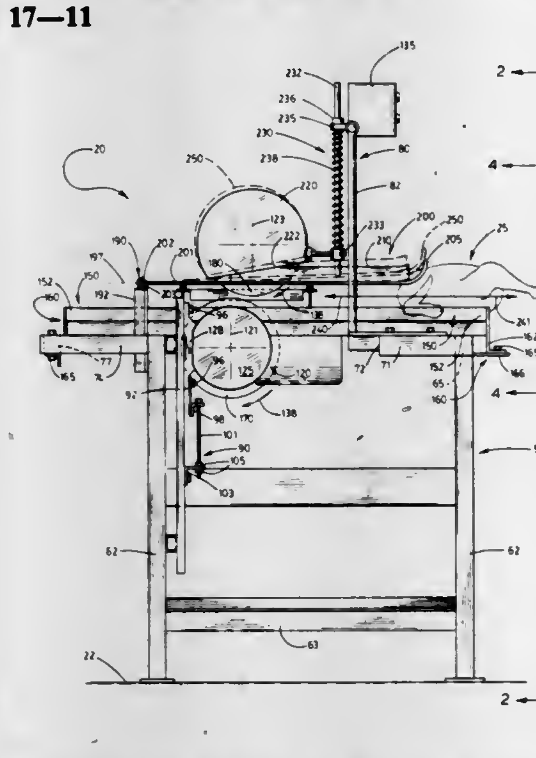

1. A poultry cutting machine for use with a poultry carcass having a generally lozenge-shaped transverse cross section; a pair of transversely opposite dorsal exterior areas; an elongated backbone extending longitudinally of the carcass along one corner of the cross section between the dorsal areas; a breast disposed at the corner of the cross section opposite the backbone; and a pair of ventral exterior areas borne on the breast transversely oppositely thereof and spaced from the dorsal areas, the carcass being moved in a predetermined path of travel longitudinally of the backbone, the machine comprising:

A. a frame;

B. a pair of dorsal guides mounted on the frame at one side of the path of travel and bearing individual first planar surfaces parallel to the path and convergent in a direction away from the path, the first surfaces being disposed individually to engage the dorsal areas oppositely of the backbone and adjacent thereto and as the carcass moves along the path;

C. a pair of ventral guides mounted on the frame oppositely of the path of travel from the dorsal guides and bearing individual second planar surfaces parallel to the path and convergent in a direction away from the path, the second surfaces being disposed in individually facing relation to the first surfaces and spaced therefrom so as individually to engage the ventral areas as the carcass moves along the path;

D. a pair of coaxially related circular saws mounted on the frame for rotation about a first axis disposed oppositely of said first surfaces from said second surfaces, the saws being disposed in individual planes extending parallel to the path in a direction between the dorsal guides and the ventral guides and having individual peripheral cutting edges extending between the first surfaces from said axis to a point disposed in the path centrally of the facing surfaces to cut the carcass oppositely along the backbone and adjacent thereto as the carcass is moved along the path;

E. a single circular saw mounted on the frame for rotation about a second axis disposed oppositely of the second surfaces from the first surfaces in a plane parallel to said planes and disposed centrally therebetween, the single saw including a peripheral cutting edge extending between the second surfaces from the second axis to a point disposed in the path centrally of the facing surfaces to split the breast as the carcass is moved along the path; and

F. means for rotationally driving the single saw and the pair of saws about their respective axes.

4,373,233

DRIVE SYSTEM AND DRAWFRAME SYSTEM FOR A ROVE DRAWING PROCESS

Jean-Louis Faure, Roanne, France, assignor to ASA S.A., Villeurbanne, France

Filed Oct. 27, 1980, Ser. No. 201,238

Claims priority, application France, Nov. 5, 1979, 79 27624

Int. Cl.^{3} D01H *5/18, 5/86*

U.S. Cl. 19—236 10 Claims

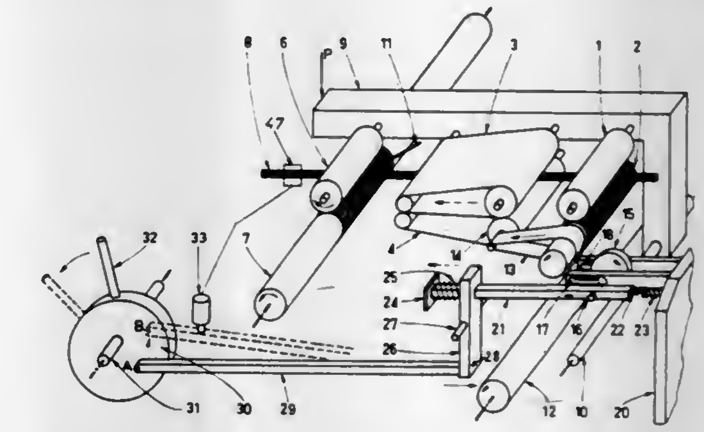

1. A drive system for a drawframe for a rove drawing process, in which the drawframe includes at least one pair of feed rollers, at least one pair of sleeves, at least one pair of drawing rollers, and at least one swinging arm on which one feed roller, one sleeve and one drawing roller of each pair is supported, the swinging arm being displaceable between an inoperative position and an operative position where the pair of feed rollers, pair of sleeves and pair of drawing rollers are engaged under pressure for rove drawing, the drive system comprising a drive shaft and at least one displaceable friction clutch roller which is displaceable between an operative position to engage both the drive shaft and one of the feed rollers for transmitting drive from the drive shaft to the feed roller, and an inoperative position where it is disengaged from the feed roller, the friction clutch roller being displaceable into its operative position to allow progressive engagement of the drawframe at start up.

4,373,234

DEVICE FOR GRIPPING AN ELONGATED FLEXIBLE ELEMENT

Ogden W. Boden, 1580 Gaywood Dr., Altadena, Calif. 91001

Filed Apr. 1, 1980, Ser. No. 136,406

Int. Cl.^{3} A44B *11/12*

U.S. Cl. 24—191 21 Claims

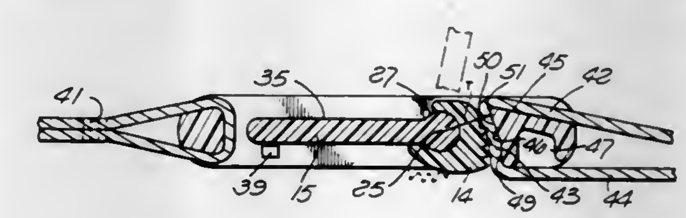

1. A buckle comprising:

a first member having two generally parallel side walls and having a first crosspiece extending between said side walls at one end thereof and attachable to a first elongated

element, and a second crosspiece extending between said side walls at their opposite ends and having a gripping surface facing generally toward said first crosspiece;

an actuating member mounted to said first member for relative swinging movement about an axis between a locking position and a released position;

said actuating member having an arm which in said locking position is received generally between said two side walls of the first member, and which in said released position swings to a position of extension outwardly from between said side walls;

said actuating member having a portion at an end of said arm extending between said side walls and projecting into bearing recesses in the side walls to mount the actuating member for said swinging movement;

said last mentioned portion of the actuating member having an outer partial cylindrical surface centered about said axis and interrupted at the location of said arm; and

a locking member connected to said actuating member for swinging movement therewith between said locking and released positions and carried about said last mentioned portion of the actuating member for limited pivotal movement relative thereto;

said locking member having an internal partial cylindrical bearing surface engaging said outer partial cylindrical surface of the actuating member to mount the locking member for said pivotal movement, and being interrupted at the location of said arm with said arm being disposed within the interruption, the width of the interruption being greater than the corresponding dimension of said arm to permit said limited relative pivotal movement;

said locking member having teeth which progressively increase in radius with respect to said axis in a direction progressively gripping a second elongated element more tightly in response to said limited relative movement of the locking member when said actuating member is in said locking position.

4,373,235
PIPE CLAMP
Jaising Korgaonkar, 158 Christie St., Toronto, Ontario, Canada (M6G 3B4)
Filed Jan. 18, 1982, Ser. No. 340,375
Int. Cl.³ F16L *19/02*
U.S. Cl. 24—285 **12 Claims**

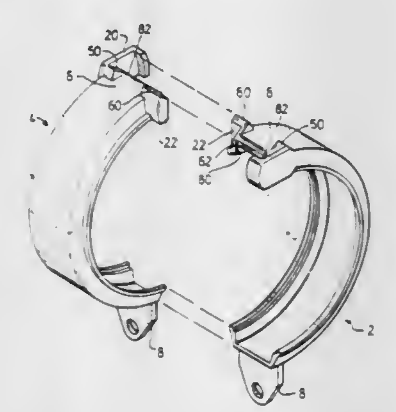

1. A clamp component of a clamping system, said component having first and second end portions, the first end portion having a stud means and stud receiving means, wherein two of said components can cooperate and form at least a limited pivotal connection by inserting the stud means of each component in the stud receiving means of the other component and wherein the second end portion of each component may be mechanically connected for securing the components about an object to be clamped.

4,373,236
ONE-PIECE BUCKLE AND KEEPER ASSEMBLY
Victor Fera, Lincoln, R.I., assignor to Sage Manufacturing Co., Inc., Providence, R.I.
Filed Nov. 3, 1980, Ser. No. 203,547
Int. Cl.³ B21C *35/04, 37/02;* **B21D** *53/46*
U.S. Cl. 29—3 **5 Claims**

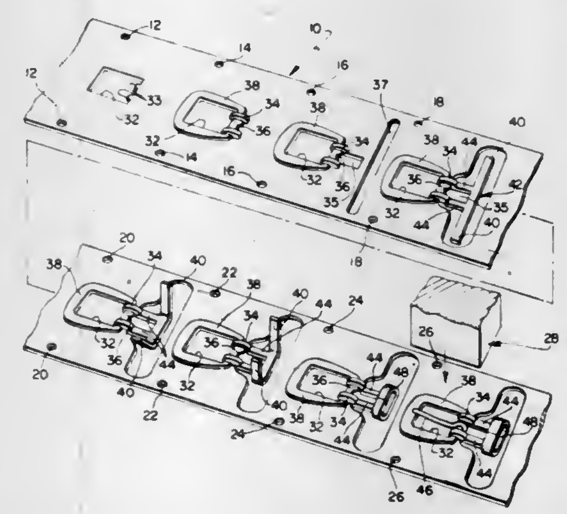

1. A method of manufacturing a buckle and keeper assembly from a flat metal strip with an automated progressive die tool comprising the steps of:

(a) stamping said strip to cut and remove portions therefrom necessary to define the interior edges of a buckle having a transverse pivot bar and a pair of tabs which project slightly inwardly from said pivot bar;

(b) stamping said strip to form the contours of a one-piece buckle and keeper assembly thereon which includes a pair of raised embossments which encompass said tabs and simulate discrete connecting arms which have been bent around said pivot bar to effect their attachment thereto;

(c) stamping said strip to cut and remove portions therefrom necessary to define the interior and exterior edges of a flat unformed keeper assembly comprising a laterally extending keeper bar and a pair of arms which extend integrally from said raised embossments to said keeper bar;

(d) bending the outwardly extending ends of said keeper bar upwardly and inwardly to form a keeper loop; and

(e) stamping said strip to remove said buckle and keeper assembly therefrom.

4,373,237
METHOD OF MANUFACTURING A COLOR TELEVISION DISPLAY TUBE
Gijsbertus Bakker, and Theodorus C. Groot, both of Eindhoven, Netherlands, assignors to U.S. Philips Corporation, New York, N.Y.
Filed Mar. 11, 1980, Ser. No. 129,502
Claims priority, application Netherlands, Dec. 27, 1978, 7812542
Int. Cl.³ H01J *9/26*
U.S. Cl. 445—3 **8 Claims**

1. A method for providing reference marks on a funnel of a color television display tube, with respect to which a display window will be positioned on a supporting surface at a rectangular end of the funnel during manufacture of the tube, said display window having a centrally-located axis perpendicular thereto which will pass through a deflection center defined by a deflection device subsequently mounted on the tube, said method comprising the steps of:

(a) attaching a centering system to the funnel at the location where the deflection device will be subsequently mounted, said centering system locating a reference point corresponding to the deflection center; and

(b) providing the reference marks at predetermined distances from an axis which passes through the reference

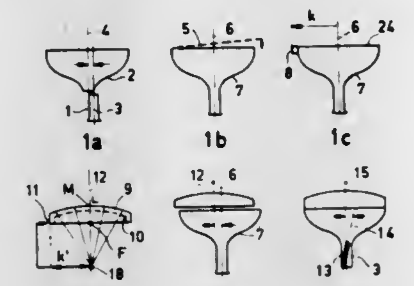

point and perpendicularly intersects a plane defined by the supporting surface at the end of the funnel.

4,373,238
SUPPORT ELEMENT WITH FLEXIBLE HEAD PORTION
Heinz Güttinger, Winterthur, Switzerland, assignor to Escher Wyss Limited, Zurich, Switzerland
Filed Feb. 23, 1981, Ser. No. 237,493
Claims priority, application Switzerland, Feb. 29, 1980, 1610/80
Int. Cl.³ B21B *31/32*
U.S. Cl. 29—116 AD **12 Claims**

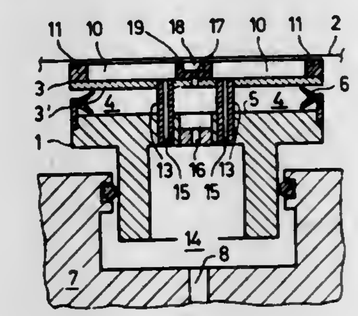

1. A support element for a movable member having a bearing surface of variable curvature, comprising a head including a flexible plate-like portion which, at one side, coacts with said surface of the movable member to define a bearing gap, and at its opposite side overlies a pressure chamber, the pressure in that chamber acting on the plate-like portion to deflect it toward the movable member; supply means for delivering fluid under pressure to the chamber; and control means responsive to changes in the width of said gap at a central region of the plate-like portion for controlling the magnitude of the pressure in the chamber, whereby the plate-like portion is flexed as required to remain parallel with said bearing surface in spite of changes in the curvature of that surface.

4,373,239
FUSING MEMBER FOR ELECTROSTATOGRAPHIC COPIERS
Arnold W. Henry, Pittsford; Jack C. Azar, and John Sagal, Jr., both of Rochester, all of N.Y., assignors to Xerox Corporation, Stamford, Conn.
Filed Feb. 27, 1980, Ser. No. 125,404
Int. Cl.³ B21B *31/08;* **B60B** *5/00*
U.S. Cl. 29—132 **10 Claims**

1. A thermally conductive fuser member for use in an electrographic copying machine comprising a relatively rigid base and a thin layer of a composition coated on said base, said composition comprising the crosslinked product of a mixture of about 100 parts by weight of alpha, omega-hydroxypolydimethylsiloxane, about 128 to 250 parts by weight of finely divided tabular alumina, about 13 to 60 parts by weight of finely divided iron oxide particles, a sufficient amount of a

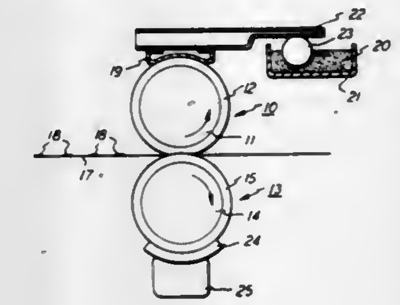

crosslinking agent, and an effective amount of a crosslinking catalyst.

4,373,240
METHOD FOR REMOVING CAM SHAFT SPROCKET
John H. Castoe, 10234 McVine St., Sunland, Calif. 91040
Continuation of Ser. No. 146,470, May 5, 1980, abandoned, which is a division of Ser. No. 871,817, Jan. 24, 1978, Pat. No. 4,218,939. This application Sep. 4, 1981, Ser. No. 299,610
Int. Cl.³ B23P *6/00, 15/00*
U.S. Cl. 29—156.4 R **2 Claims**

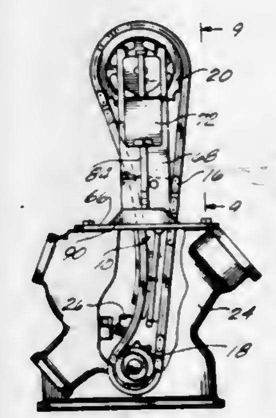

1. A method for facilitating removal of an engine cylinder head and for facilitating cranking of the engine when the cylinder head is removed, wherein the engine includes an upper cam shaft sprocket, a lower crankshaft sprocket below the cam shaft sprocket, an endless timing chain engaged with both sprockets and forming a narrow space between opposite sides of the chain adjacent the crankshaft sprocket, and a chain tensioner urged against the portion of the timing chain adjacent the crankshaft sprocket, the method comprising the steps of:

providing a chain support tool having a rigid body, a movable finger in a normal position adjacent a lower portion of the rigid body, and finger actuating means for moving the finger outwardly from the normal position to an operative position enlarging the effective width of the lower portion of the rigid body;

inserting the chain support tool into said narrow space between the opposite sides of the timing chain, with the finger in its normal position, so the rigid body supports the opposite sides of the timing chain adjacent the crankshaft sprocket;

operating the finger actuating means for moving the finger outwardly to its operative position to apply pressure against the normal bias of the chain tensioner for retaining the timing chain on the crankshaft sprocket;

removing the cam shaft sprocket and the engine cylinder head;

providing a cam shaft idler tool having a hub for supporting the cam shaft sprocket, a post for supporting the hub, and means for securing the hub in a selected fixed position on the post;

supporting the cam shaft sprocket on the hub;

securing the post in a fixed position; and
moving the hub to a selected fixed position on the post so the sprocket thereon applies tension to the timing chain, so the engine can be cranked, in the absence of the cylinder head, owing to the tension of the timing chain.

4,373,241

METHOD OF MAKING PROPELLER BLADE

Ralph P. Maloof, 4527 Park Monaco, Calabasa, Calif. 91302
Continuation of Ser. No. 805,283, Jun. 10, 1977, Pat. No. 4,202,655. This application Apr. 28, 1980, Ser. No. 144,389
Int. Cl.³ B23P *15/02;* **B21C** *23/16*
U.S. Cl. 29—156.8 P **27 Claims**

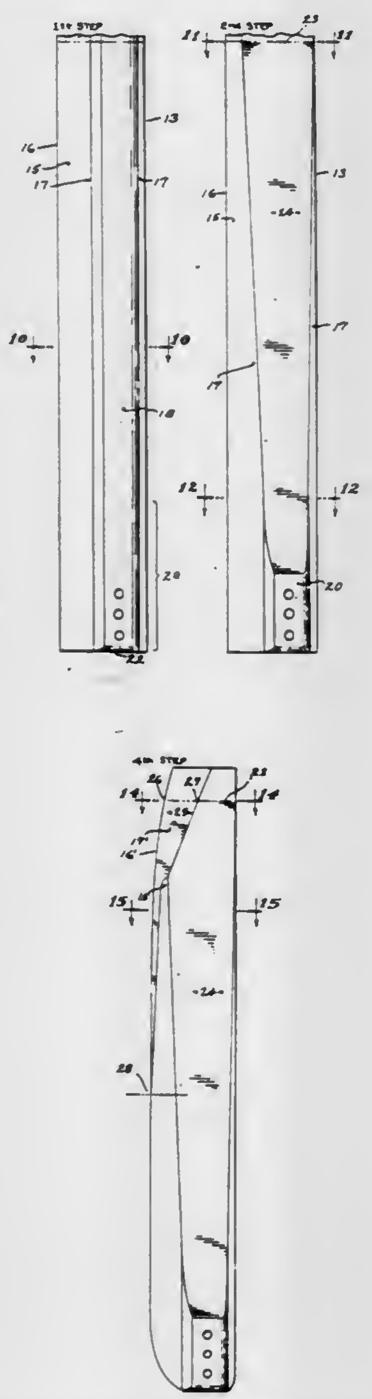

1. A process for producing a mono-form propeller blade, and which includes:
extruding a basic airfoil of straight elongate and uniform configuration to extend from the root to the tip of the propeller blade and to have front and back cambers extending between rounded and thin leading and trailing edges, respectively:
and truncating the back camber to a flat plane extending from the root to the tip of the propeller blade in tapered relation to the said front camber of the extruded airfoil.

4,373,242

METHOD OF MANUFACTURING A WEDGE GATE VALVE

Holliday L. Goldman, Red Lion, Pa., assignor to Allis-Chalmers Corporation, Milwaukee, Wis.
Filed Oct. 4, 1978, Ser. No. 948,527
Int. Cl.³ B23P *15/00;* **F16K**
U.S. Cl. 29—157.1 R **1 Claim**

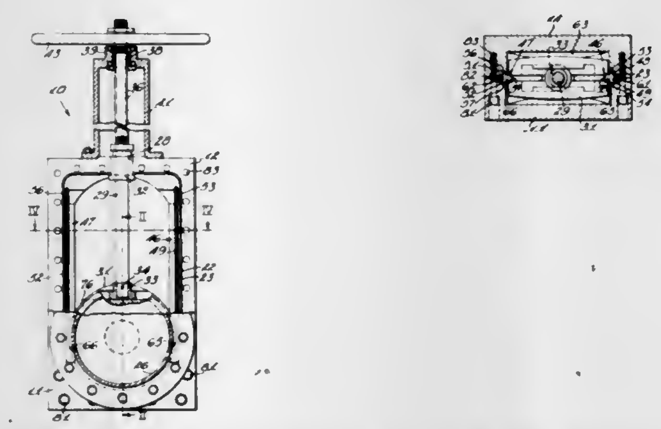

1. The method of manufacturing a wedge disc valve comprising the steps of:
forming a cavity in each of two identical rectangular pieces of solid steel plate, which cavities define a recess when the two plates are secured together in cavity communicating relationship;
forming an L-shaped groove in two parallel edge surfaces of the portion of each of the steel plates that encompasses the associated cavities therein, the L-shaped grooves in each steel plate cooperating to form two T-slots with the two steel plates in mating relationship;
forming a fluid flow opening in each rectangular piece;
attaching a wedge disc guide bar to the longitudinal edges of the two rectangular pieces to extend into the recess formed by the cavities with the two rectangular pieces mated with both
of the guide bars as T-shaped members with the cross-bar of each T-shaped member being confined within associated ones of the T-slots the stem of the T-shaped guide bars extending through associated T-slots;
forming a peripheral groove in a wedge disc;
locating the wedge disc within the defined recess with its peripheral groove engaged in guideable engagement on the inwardly extending stems of the T-shaped guide bars;
forming an opening in one end of the mated steel plates in which a shaft stuffing box is located with the wedge disc operating shaft extending through the stuffing box;
attaching the shaft to the wedge disc;
forming a seal receiving groove in the edge surface of the portion of the steel plate that encompasses the cavity formed in one of the steel plates, the groove extending from one side of the stuffing box opening to the other;
inserting a resilient seal in the seal receiving groove; and
securing both of the steel plates together in mating relationship with their respective cavities in communicating relationship.

4,373,243

METHOD OF FORMING REINFORCED PLATE-TYPE HEAT EXCHANGER

Masakazu Nakamura, Takarazuka, Japan, assignor to Sumitomo Precision Products Co. Ltd., Amagasaki, Japan
Continuation of Ser. No. 895,026, Apr. 10, 1978, abandoned. This application Mar. 20, 1980, Ser. No. 132,185
Claims priority, application Japan, Apr. 23, 1977, 52-52093[U]
Int. Cl.³ B23P *15/26;* **B23K** *31/02*
U.S. Cl. 29—157.3 D **1 Claim**

1. A method for fabricating an aluminum heat exchanger using a fluxless brazing process which consists of:

(a) positioning a first bare aluminum reinforcing member such that one side surface thereof is exposed, said first reinforcing member having a rectangular shape of certain length and width dimensions,
(b) positioning a brazing sheet in contact with the exposed surface of said first reinforcing member, said brazing sheet having a rectangular shape of the same length and width dimensions as said first reinforcing member and consisting of an aluminum plate with brazing material clad to opposite sides thereof,
(c) positioning two identical side bars in contact with said brazing sheet so as to be positioned in parallel along opposite sides of said brazing sheet,
(d) positioning a corrugated aluminum fin means between said side bars and so as to be in contact with the portion of said brazing sheet therebetween,

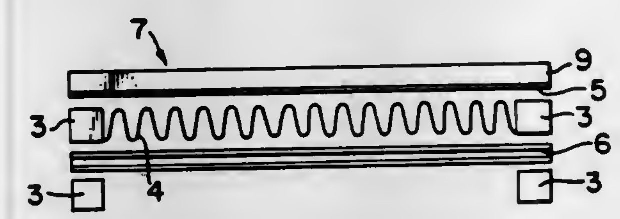

(e) positioning another said brazing sheet in contact with both said side bars and said corrugated fin means, said steps (b), (c), (d) and (e) acting to form a single heat exchanger sub-unit,
(f) repeating steps (b), (c), (d) and (e) to form a multiplicity of additional heat exchanger sub-units against one another,
(g) positioning a second bare aluminum reinforcing member against the final brazing sheet, said second reinforcing member having a rectangular shape of the length and width dimensions as said first reinforcing member, and
(h) evacuating the space around said elements and heating said elements so as to braze together all the elements via a fluxless brazing technique and form the aluminum heat exchanger.

4,373,244

METHOD FOR RENEWING THE BRICKWORK OF COKE OVENS

Walter Mertens; Heinz Thubeauville, and Wilhelm Glittenberg, all of Bochum, Fed. Rep. of Germany, assignors to Dr. C. Otto & Comp. G.m.b.H., Bochum, Fed. Rep. of Germany
Filed Oct. 28, 1980, Ser. No. 153,144
Claims priority, application Fed. Rep. of Germany, May 25, 1979, 2921171
Int. Cl.³ B23P *7/00*
U.S. Cl. 29—402.08 **2 Claims**

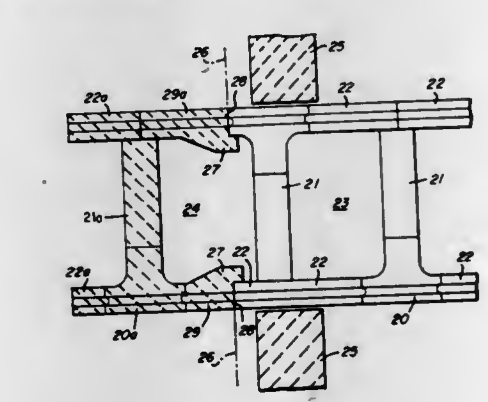

1. A method for renewing the brickwork of vertical heating flues in heating walls near the outer ends of horizontal coke ovens, said method including the steps of forming a vertical section through the heating wall at the innermost internal end of the heating flue requiring repair, removing the brickwork in front of the vertical section, selecting replacement brickwork including oven bricks each having a projecting lug extending from a side thereof, installing the oven bricks with the projecting lugs extending into engagement over existing oven brick on the heating flue side of the heating wall along said vertical section and installing replacement brickwork to form the remaining part of the removed brickwork.

4,373,245

PROCESS FOR MANUFACTURING A METAL SEAT BACK STRUCTURE

Filippo Volpe, Corso Sebastopoli 235, 10100 Torino, Italy
Filed Oct. 7, 1980, Ser. No. 194,825
Claims priority, application Italy, Oct. 10, 1979, 68967 A/79
Int. Cl.³ B23P *17/00*
U.S. Cl. 29—416 **5 Claims**

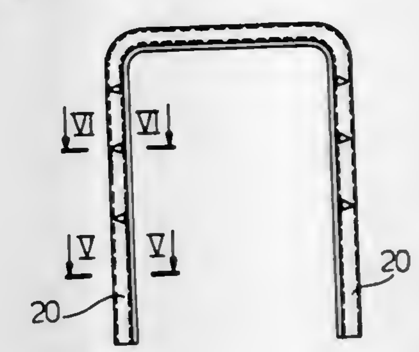

1. A process for manufacturing a metal structure for a seat back for motor vehicles and the like, characterized in comprising the following steps:
(a) shearing at least tow flat L-shaped elements (12, 14) from a sheet metal plate (10), each element having a long and a short branch wherein the width of each branch of the L-shaped elements is substantially constant and the short branches terminate in flat outer marginal ends;
(b) positioning the outer marginal ends of the short branches of the two L-shaped elements in abutting relationship;
(c) welding together the abutting marginal ends of the short branches of the two L-shaped elements (12, 14) to obtain a single, planar U-shaped blank (16);
(d) drawing the U-shaped blank (16) to form a C-shaped cross-section along its entire length, which cross-section opens outwardly relative to the plane of said U-shaped blank, obtaining a structure usable as a frame for the back of a seat of motor vehicles and the like.

4,373,246

METHOD OF OPENING A CAN WITH FULCRUM-TYPE OPENER TABS

Arthur C. VanHoutte, 24743 Murray Dr., and Earl L. Caber, 24744 Murray Dr., both of Mt. Clemens, Mich. 48045
Filed Jun. 2, 1980, Ser. No. 155,204
Int. Cl.³ B67B *7/40*
U.S. Cl. 29—426.4 **1 Claim**

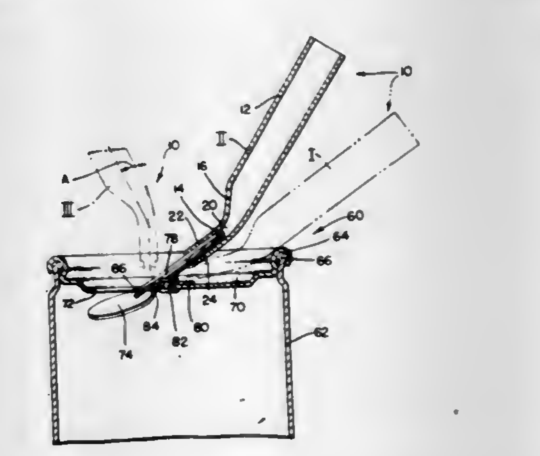

1. A method of providing leverage in the opening of a bever-

age containing can employing a fulcrum-type opener characterized by a peripherally weakened closure member integrally formed in the top of said can and a key portion which effects rupture opening of a contents dispensing aperture within said top about the periphery of said closure member and remains permanently affixed thereto after said opening, said key portion initially being disposed substantially parallel to and spaced slightly above a substantially horizontal planar portion of said top, said method comprising the steps of:
grasping an elongated handle of an improved hand held opener in the hand of an operator so that one end of said handle projects outwardly therefrom;
orienting the can to be opened so that an upwardly depending edge portion defined thereby, which circumferentially encompasses said fulcrum-type opener and extends substantially above said key portion, projects substantially upwardly;
securing said can from inadvertent displacement during the opening thereof to avoid spilling the beverage contained therein;
maneuvering said hand held opener with respect to said can so that tab embracing means, depending from said extending handle and defining a key portion receiving recess therein opening outwardly from said handle and having an axis of symmetry acutely angularly offset from the axis of elongation of said handle, is simultaneously guided generally downwardly and inwardly toward said fulcrum-type opener, whereby said hand-held opener avoids interference with said upwardly depending edge portion and said key portion is matingly received within said key portion receiving recess in a single, continuous motion to effect mechanical linkage between said hand-held opener and said key portion, said axis of symmetry being substantially parallel to said horizontal planar portion of said top immediately prior to and during said mechanical linkage;
angularly displacing said hand-held opener to rotate said key portion from a first, stowed position to a second, load bearing position about a point of connection between said key portion and said top to effect said opening;
reciprocally displacing said hand-held opener to rotationally return said key portion to said stowed position wherein said key portion does not interfere with dispensing of said beverage through said opening; and
demating said key portion and said hand-held opener by further maneuvering said hand-held opener generally outwardly and upwardly in a single, continuous motion, from said can to again avoid interference with said edge portion.

4,373,247

METHOD AND DEVICE FOR REMOVING A RING TRAVELLER FROM THE RING OF A RING-SPINNING OR RING-TWISTING FRAME

Ernst Holenstein, and Paul Ramseier, both of Pfäffikon, Switzerland, assignors to Bräcker AG, Pfäffikon, Switzerland

Filed Aug. 28, 1980, Ser. No. 182,465

Claims priority, application Switzerland, Sep. 14, 1979, 8330/79

Int. Cl.³ B23P *19/00*

U.S. Cl. 29—426.6 9 Claims

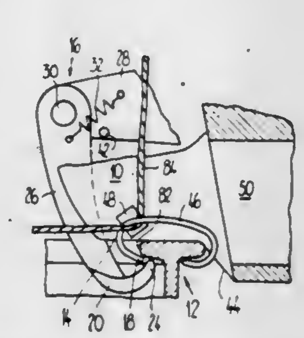

1. A method of removing a ring traveller from the ring of a ring-spinning or ring-twisting frame, comprising the steps of:
positioning a removal member relative to a ring traveller located on the ring;
manipulating the removal member so as to force one end of the ring traveller over an adjacent edge of a flange of the ring while the other end of the ring traveller is still in engagement with another flange of the ring, in order to thereby expand the ring traveller against its own spring tension;
releasing said one end of the ring traveller after it has cleared said adjacent edge of the ring, so that the ring traveller springs-off the ring in the direction of a collecting device; and
retaining the released ring traveller in the collecting device after such ring traveller has sprung-off the ring.

4,373,248

METHOD OF MAKING HIGH DENSITY SEMICONDUCTOR DEVICE SUCH AS FLOATING GATE ELECTRICALLY PROGRAMMABLE ROM OR THE LIKE

David J. McElroy, Houston, Tex., assignor to Texas Instruments Incorporated, Dallas, Tex.

Continuation-in-part of Ser. No. 923,876, Jul. 12, 1978, Pat. No. 4,184,207, which is a division of Ser. No. 762,613, Jan. 26, 1977, Pat. No. 4,151,021. This application Jan. 7, 1980, Ser. No. 110,052

Int. Cl.³ H01L *21/225, 21/26, 21/265*

U.S. Cl. 29—571 22 Claims

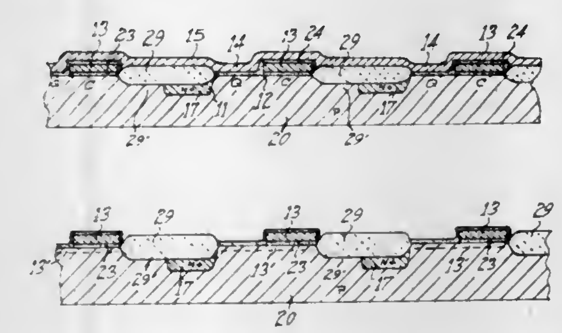

1. A method of making an electrically programmable floating gate nonvolatile semiconductor memory in the form of an array of rows and columns of memory cells, comprising the steps of: applying successive coatings of oxide, polycrystalline silicon and an oxidation mask to a face of a silicon body; patterning said coating of oxidation mask to provide a plurality of parallel strips; oxidizing the face of the silicon body to produce field oxide in the areas between said parallel strips of oxidation mask, the field oxide being thicker than said oxide coating; depositing a second conductive layer on said face insulated therefrom by an oxide coating; patterning said layer to provide a second plurality of parallel strips; said second plurality of parallel strips providing row lines and being perpendicular to elongated column lines in the face.

4,373,249

METHOD OF MANUFACTURING A SEMICONDUCTOR INTEGRATED CIRCUIT DEVICE

Yasunobu Kosa, and Kazuhiro Komori, both of Kodaira, Japan, assignors to Hitachi, Ltd., Tokyo, Japan

Filed Sep. 12, 1980, Ser. No. 186,739

Claims priority, application Japan, Feb. 20, 1980, 55-18983

Int. Cl.³ H01L *21/26*

U.S. Cl. 29—571 7 Claims

1. A method of a fabricating a semiconductor integrated circuit device comprising the steps of:
simultaneously forming first and second gate insulation films at one part and another part of the main surface of a first conductivity type semiconductor substrate, respectively;
forming a conductor layer on said first and second gate insulation films and patterning said conductor layer thereby to form first and second gate electrodes;
forming an insulation film on said first gate electrode;

forming a third gate electrode on said insulation film of said first gate electrode; and

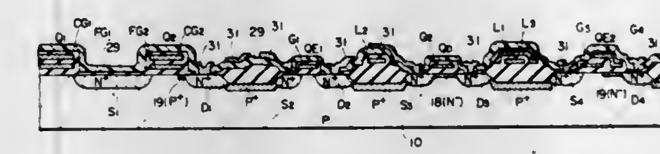

introducing into said substrate an impurity which determines a second conductivity type exhibiting the opposite conductivity to said first conductivity type thereby to form source and drain regions.

4,373,250

PROCESS FOR FABRICATING A HIGH CAPACITY MEMORY CELL

Manohar L. Malwah, Sunnyvale, Calif., assignor to Signetics Corporation, Sunnyvale, Calif.

Filed Nov. 17, 1980, Ser. No. 207,264

Int. Cl.³ H01L *21/26*

U.S. Cl. 29—571 8 Claims

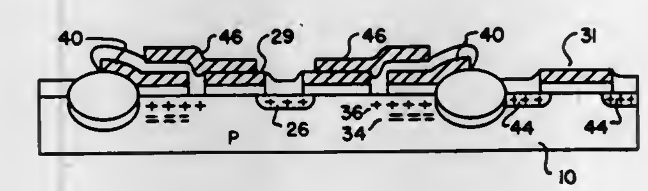

1. A method of fabricating an array of high capacity memory cells, comprising:
(a) forming isolation regions in a surface of a semiconductor substrate which are patterned to form a multiplicity of cell areas;
(b) forming a pattern of conductive material over said semiconductor surface insulated therefrom to form a transfer gate over each cell area spaced from an adjacent isolation region and to define a storage region in said semiconductor surface adjacent to one side of said transfer gate between said transfer gate and said adjacent isolation region and also to define a bit line region on the other side of said transfer gate;
(c) introducing ions having majority carriers of first conductivity type in said storage region to form a shallow ion layer therein self-aligned with said transfer gate;
(d) introducing ions having majority carriers of second conductivity type opposite said first conductivity type in said storage region to form a deep ion layer beneath said shallow ion layer self-aligned with said transfer gate;
(e) forming a storage gate of conductive material over a portion of said storage region and spaced laterally from said transfer gate to form a gap between said storage and transfer gates; and
(f) introducing ions having majority carriers of said first conductivity type into the portion of said storage region defined by said gap and into said bit line region to at least neutralize some of the ions in said deep ion layer and also to produce a bit line which may serve as the source region of a transistor.

4,373,251

METHOD OF MANUFACTURING A SEMICONDUCTOR DEVICE

Hermanus J. H. Wilting, Eindhoven, Netherlands, assignor to U.S. Philips Corporation, New York, N.Y.

Filed Aug. 19, 1981, Ser. No. 294,268

Claims priority, application Netherlands, Aug. 27, 1980, 8004835

Int. Cl.³ H01L *21/22*

U.S. Cl. 29—571 6 Claims

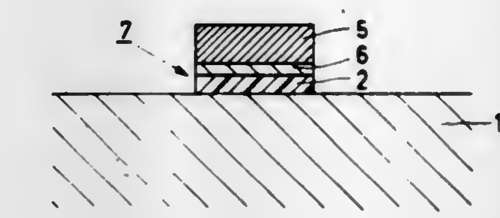

1. A method of manufacturing a semiconductor device, including the steps of providing an electrically insulating layer on a surface of a semiconductor body, providing a polysilicon layer on the insulating layer which polysilicon layer is made electrically conductive by the introduction of a dopant, providing a metal layer on the polysilicon layer, and subjecting the metal layer together with the polysilicon layer to a thermal treatment in which the polysilicon layer is converted over a part of its thickness into a metal silicide layer by reaction with the metal of the metal layer, characterized in that, after converting the polysilicon layer over a part of its thickness into the metal silicide layer, the dopant is introduced through the metal silicide layer into the remaining part of the polysilicon layer.

4,373,252

METHOD FOR MANUFACTURING A SEMICONDUCTOR STRUCTURE HAVING REDUCED LATERAL SPACING BETWEEN BURIED REGIONS

Robert E. Caldwell, Mountain View, Calif., assignor to Fairchild Camera & Instrument, Mountain View, Calif.

Filed Feb. 17, 1981, Ser. No. 234,289

Int. Cl.³ H07L *21/263;* H01L *27/04*

U.S. Cl. 29—576 B 6 Claims

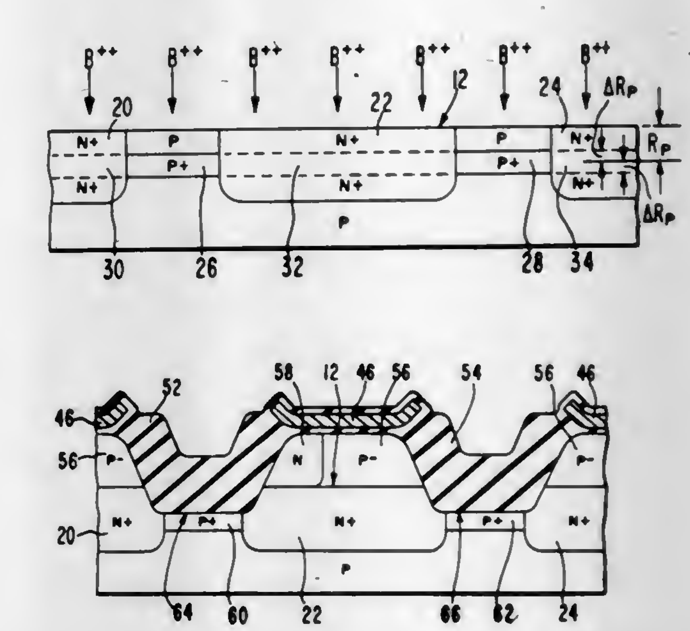

1. In a process for fabricating a semiconductor structure, a method for reducing the lateral spacing between buried regions, the method comprising the steps of:
providing a semiconductor substrate of a first conductivity type having an electrically insulating layer along an upper surface of the substrate;

forming two laterally spaced apart holes through the insulating layer to the upper surface of the substrate;
introducing a semiconductor dopant of a second conductivity type opposite to the first conductivity type through the holes in the insulating layer into the substrate to form two laterally spaced apart doped regions of the second conductivity type in the substrate;
removing the remainder of the insulating layer;
implanting ions of a chemical species of the first conductivity type into the upper surface of the substrate at a selected dosage;
forming an epitaxial layer on the upper surface of the substrate;
forming a groove in a portion of the epitaxial layer overlying that portion of the substrate between the doped regions of the substrate; and
exposing the surface of the epitaxial layer exposed by the groove to a selected oxidizing environment to form an electrically insulating oxidized region which extends down into a portion of the substrate between the doped regions,
wherein ions of the chemical species implanted into the surface of the substrate diffuse downwardly during the exposing step to define a more highly doped region of the first conductivity type between the doped regions and adjacent to the oxidized regions, the more highly doped region having a net dopant concentration greater than the net dopant concentration of an adjacent portion of the first conductivity type of the substrate and the selected dosage being sufficiently high such that no inversion into a doped region of the second conductivity type occurs in the more highly doped region, whereby the more highly doped and oxidized regions in combination electrically isolate the doped regions from each other.

4,373,253
INTEGRATED CMOS PROCESS WITH JFET
Wadie N. Khadder, Sunnyvale; Jia-Tarng Wang, San Jose, and James E. Solomon, Cupertino, all of Calif., assignors to National Semiconductor Corporation, Santa Clara, Calif.
Filed Apr. 13, 1981, Ser. No. 253,470
Int. Cl.³ H01L *27/04, 21/263, 21/22*
U.S. Cl. 29—576 B **8 Claims**

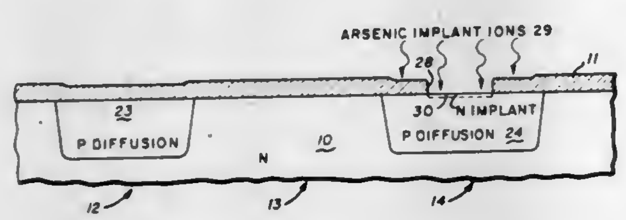

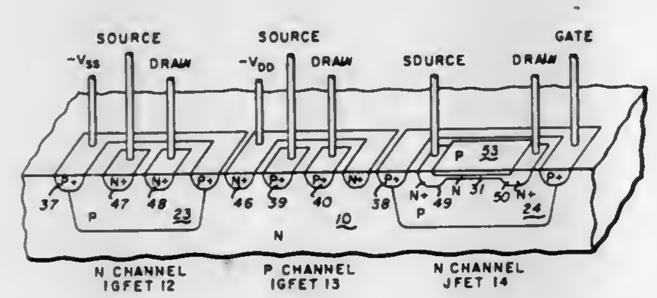

1. In a CMOS integrated circuit wafer treatment process, the additional steps for creating a JFET comprising:
starting with a semiconductor wafer of a first conductivity type;
establishing an opposite conductivity type well in said wafer with said well having a resistivity suitable for a JFET gate;
creating spaced apart source and drain regions of said first conductivity type in said well;
creating a channel region having said first conductivity type joining said source and drain regions;
ion implanting an impurity of said opposite conductivity type having a different diffusity rate from the impurity in said channel to form an overlapping top cap over said channel to locate said channel below the surface of said wafer and whereby said top cap is connected to said well;
applying operating potentials to said JFET;
measuring the pinch off voltage of said JFET channel; and
heat treating said wafer to shift said pinch off voltage.

4,373,254
METHOD OF FABRICATING BURIED CONTACTS
Martin A. Blumenfeld, Tequesta, Fla., assignor to RCA Corporation, New York, N.Y.
Filed Apr. 6, 1981, Ser. No. 251,075
Int. Cl.³ H01L *21/26*
U.S. Cl. 29—578 **6 Claims**

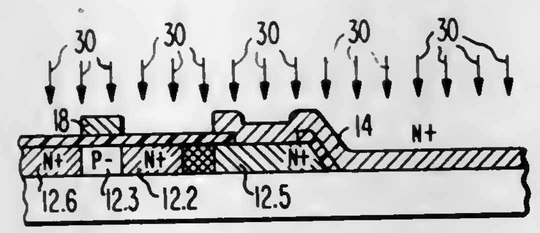

1. A process for forming low resistance, ohmic contacts to a semiconductor body of a given conductivity type, the body having a layer of insulating material thereon, comprising the steps of:
masking the semiconductor body to delineate an area within which the ohmic contact is to be formed, the delineated area being larger than the area of the ohmic contact;
doping only the delineated area of the semiconductor body under the delineated area to an opposite conductivity type;
removing a portion of the layer of insulating material in the delineated area to expose a portion of the underlying semiconductor body; and
providing a conductive ohmic contact to the exposed portion of the semiconductor body.

4,373,255
METHOD OF MAKING OXIDE PASSIVATED MESA EPITAXIAL DIODES WITH INTEGRAL PLATED HEAT SINK
Herbert Goronkin, Scottsdale, Ariz., assignor to The United States of America as represented by the Secretary of the Air Force, Washington, D.C.
Division of Ser. No. 50,272, Jun. 19, 1979, Pat. No. 4,340,900. This application Jun. 3, 1981, Ser. No. 270,050
Int. Cl.³ H01L *29/06, 29/90*
U.S. Cl. 29—580 **5 Claims**

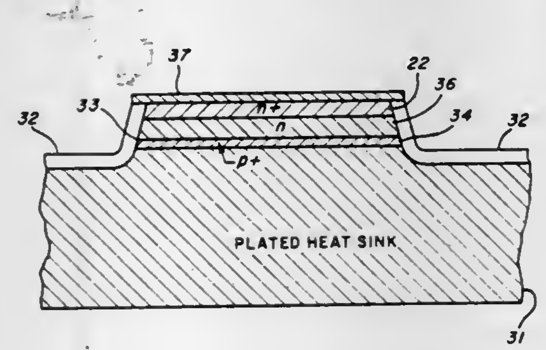

5. A method of making a silicon epitaxial diode comprising the steps of:
a. forming a silicon substrate having a heavily doped layer and a lightly doped layer, both layers being of the first conductivity type;

b. thermally growing a layer of SiO_2 on the lightly doped layer;
c. depositing a first temporary support layer on the SiO_2 in step b;
d. thermally growing a layer of SiO_2 on the heavily doped layer;
e. depositing a layer of Si_3N_4 over the SiO_2 in step d;
f. defining a diode pattern on the Si_3N_4 layer;
g. etching through the Si_3N_4 and the SiO_2 layers in the region outside the diode pattern;
h. etching through the lightly and heavily doped layers of silicon to form a mesa-like structure;
i. thermally growing a layer of SiO_2 on the sidewalls of the mesa-like structure;
j. depositing a second temporary support layer on the SiO_2 in step i;
k. removing the first temporary support layer;
l. etching the SiO_2 from step b to expose the lightly doped layer;
m. introducing dopant of the second conductivity type, opposite the first conductivity type, into the lightly doped layers so as to form a pn junction;
n. plating a thick layer of thermally and electrically conductive material on the area doped in step m;
o. removing the second temporary support layer;
p. etching away the Si_3N_4 over the diode pattern;
q. etching the SiO_2 from the surface of the heavily doped layer; and
r. depositing a layer of electrically conductive material on the surface of the heavily doped layer.

4,373,256
METHOD OF MAKING ROTOR COIL OF CORELESS MOTOR
Yoshimitsu Nakamura, Settsu, Japan, assignor to Matsushita Electric Works, Ltd., Osaka, Japan
Continuation of Ser. No. 904,866, May 11, 1978, Pat. No. 4,236,295. This application Oct. 8, 1980, Ser. No. 195,054
Claims priority, application Japan, May 18, 1977, 52-57873
Int. Cl.³ H02K *15/02*
U.S. Cl. 29—598 **2 Claims**

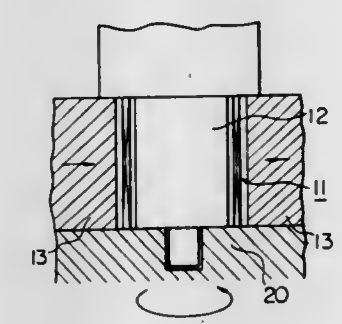

1. In a method of making a cylindrical rotor coil for use in a coreless electric motor, wherein a substantially cylindrical coil is formed from an insulation coated conductive wire by diagonally folding back the wire at respective axial and edge portions of a cylindrical shape to sequentially form respective inner and outer coil layer turns running diagonally from one end edge to the other while intersecting at an angle the other layer turn, the improvement wherein said coil is compacted by the steps of:
positioning within said coil is mandrel having an outer diameter smaller than an inner diameter of said coil, and
applying pressure to said coil in radial inward directions against an outer periphery of said coil while maintaining flat rigid die surfaces in abutting relationship with both axial ends of said coil, to generally flatten the portions of said wire defining inner and outer peripheries of said coil and to radially inwardly compress together the turns of said coil against said mandrel for reducing the radial thickness of said coil and reducing the inner and outer diameters of said coil.

4,373,257
PROCESS AND DEVICE FOR FORMING THE WINDING CORES OF STATORS OR ROTORS OF ELECTRIC MACHINES
Josef Müller, Frankfurt am Main, Fed. Rep. of Germany, assignor to Balzer & Droll, KG, Niederdorfelden, Fed. Rep. of Germany
Division of Ser. No. 49,305, Jun. 18, 1979, Pat. No. 4,327,478. This application Jul. 28, 1980, Ser. No. 173,066
Claims priority, application Fed. Rep. of Germany, Jun. 21, 1978, 2827139
Int. Cl.³ H02K *15/00*
U.S. Cl. 29—736 **16 Claims**

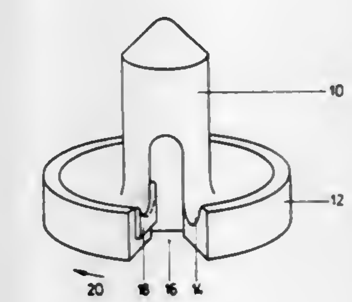

1. A device for shaping and lacing the winding head of a stator or rotor of an electrical machine comprising a shaping tool including a shaping part for shaping a said winding head of a stator or rotor, means for rotating said shaping tool relative to the longitudinal axis of the stator or rotor, and lacing tool means for lacing said winding head simultaneously with said shaping of said winding head, said shaping tool being disposed immediately adjacent to said lacing tool means and being progressively movable with the lacing tool means around the circumference of the winding head.

4,373,258
TOOL FOR REMOVING COVER FROM ELECTRICAL CONNECTOR
Erle M. Hutchins, Bel Air, Md., assignor to Western Electric Company, Incorporated, New York, N.Y.
Filed Mar. 26, 1981, Ser. No. 247,662
Int. Cl.³ B23P *19/00;* **H01R** *43/00*
U.S. Cl. 29—764 **11 Claims**

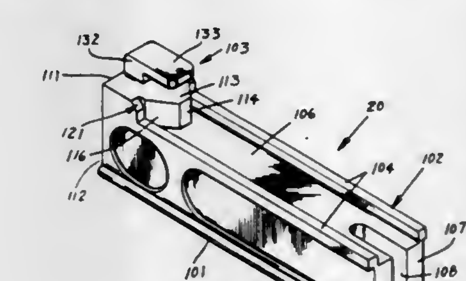

1. A tool for removing a cover from an electrical connector to which it is secured by a locking arrangement between the connector and depending portions of sidewalls of the cover at one end of the connector, said tool comprising:
a prong which is adapted to be inserted into a cavity of the connector;
camming means aligned with the one end of the connector when said prong is inserted into the cavity for engaging the cover at the one end of the connector and for spreading apart the depending portions of the sidewalls of the cover to disengage the depending portions from the connector; and

separating means rendered effective by the spreading apart of the depending portions of the cover for causing the cover to be moved away from the one end of the connector.

4,373,259

PROCESS FOR MOUNTING COMPONENTS WITH SURFACE JUNCTIONS TO PRINTED-CIRCUIT BOARDS

Hans Motsch, Geislingen, Fed. Rep. of Germany, assignor to Württembergishche Metallwarenfabrik, Geislingen, Fed. Rep. of Germany

Filed Dec. 5, 1979, Ser. No. 100,354

Claims priority, application Fed. Rep. of Germany, Dec. 6, 1978, 2852753

Int. Cl.³ H05K *3/34*

U.S. Cl. 29—840 **15 Claims**

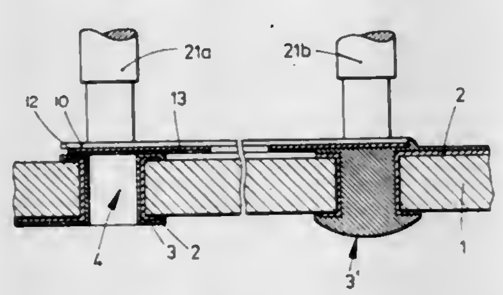

1. A process for connecting flat film-like components to a printed circuit board, wherein said components include electrically-conductive junctions, said process comprising the steps of:

providing said printed circuit board with through-plated holes whose plating includes fusible material and extends to contacts on said printed board, where said junctions are to be placed on said printed circuit board;

positioning said components on said board with said junctions touching said contacts but not extending into said through-plated holes; and

contacting said printed circuit board, on a side thereof opposite said components, with liquid solder which rises in said through-plated holes thereby heating the plating therein and said junctions to form a bond between said printed circuit board and said components at said contacts.

4,373,260

ELECTRICAL CIRCUIT WIRING ARRANGEMENT AND ITS SOLDERING METHOD

Kazuaki Matsumura, Ohtsu, and Seiki Nakanishi, Ohmihachiman, both of Japan, assignors to New Nippon Electric Company, Ltd., Osaka, Japan

Filed Aug. 7, 1980, Ser. No. 175,960

Claims priority, application Japan, Aug. 11, 1979, 54-102519

Int. Cl.³ H05K *3/34*

U.S. Cl. 29—840 **5 Claims**

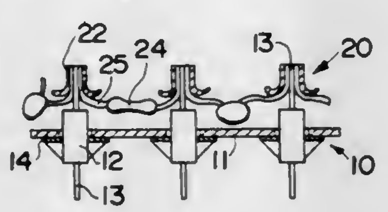

1. A method of manufacturing an electrical circuit wiring on metal board means for supporting a plurality of first circuit elements with hard leads, a plurality of second circuit elements with soft leads, and a plurality of eyelet terminals of conductive material for receiving said hard leads and said soft leads, by forming soldered junctions for connecting said first circuit elements and said second circuit elements to each other, comprising the following steps:

assembling said first circuit elements on said metal board means, locating each of said eyelet terminals in a predetermined respective hole formed on an unsolderable supporting mounting tool, mounting said second circuit elements on said mounting tool by inserting each of said soft leads into a respective one of said eyelet terminals, inserting each of said hard leads of said first circuit elements also into a respective one of said eyelet terminals, applying molten solder to portions of said hard leads and of said soft leads extending out of said eyelet terminals so as to connect electrically and mechanically said first and second circuit elements at soldered junctions formed by said eyelet terminals; and removing said mounting tool from said soldered first and second circuit elements by passing said soldered junctions with the eyelets through said holes.

4,373,261

METHOD AND APPARATUS FOR MANUFACTURING ELECTRICAL HARNESSES

Alden O. Long, Jr., Carlisle, Pa., assignor to AMP Incorporated, Harrisburg, Pa.

Filed Sep. 4, 1980, Ser. No. 183,861

Int. Cl.³ H01R *43/04;* **B23P** *19/00*

U.S. Cl. 29—861 **13 Claims**

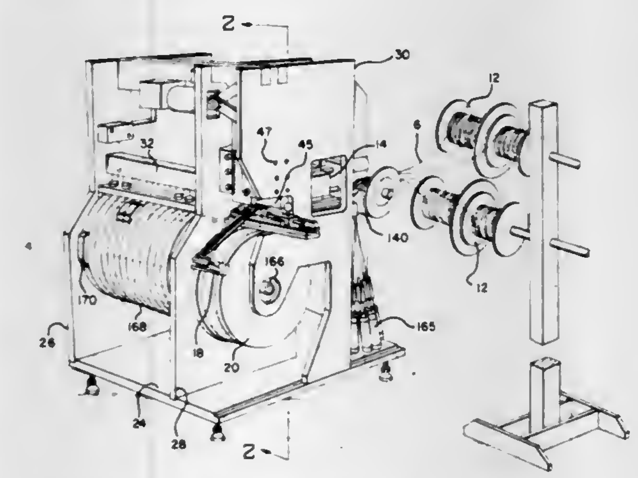

1. Apparatus for serially manufacturing electrical harness means of the type comprising at least one electrical connector, said connector having contact terminals therein of the type having wire-receiving portions, said harness means having wires connected to, and extending from, said terminals, said apparatus being of the type comprising a wire insertion zone, connector locating means for locating a connector in a predetermined position in said insertion zone, wire feeding means for feeding wires in side-by-side parallel relationship from endless wire sources, such as spools, along a first path to position said wires in alignment with terminals in a connector in said connector locating means, and wire insertion means movable along a second path towards and away from said connector in said locating means, the improvements to said apparatus comprising:

connector moving means for moving said connector from said connector locating means along a continuation of said first path away from said insertion zone,

first wire-cutting means on said first path, said first wirecutting means being located between said connector-locating means and said first wire sources, said first wire-cutting means comprising individual sets of cutters for each of said wires, and

actuating means effective to actuate said feeding means thereby to feed the leading ends of said wires to said insertion zone, to thereafter actuate said wire insertion means to insert said leading ends of said wires into said terminal of said connector in said connector-locating means, to thereafter actuate said connector moving means to move said connector from said insertion zone and thereby withdraw wire from said wire sources, and said actuating means being effective selectively to actuate said individual wire cutters during movement of said connector to produce wires of predetermined lengths extending from said connector.

10. A method of serially manufacturing electrical harness means of the type comprising at least one electrical connector, said connector having contact terminals therein of the type having wire-receiving portions, and harness means having wires connected to, and extending from, said terminals, said wires having free ends which are remote from said connector, said method comprising the steps of:

(a) locating one of said connectors in a wire insertion station,
(b) positioning the leading ends of wires which extend from substantially endless wire sources, such as spools, in alignment with the terminals in a said connector at said insertion station and inserting said leading ends into said terminals,
(c) moving said connector along a predetermined path away from said insertion station and away from said wire sources and thereby pulling wire from said wire sources,
(d) cutting said wires during movement of said connector along said path at a fixed location between said insertion station and said wire sources and thereby producing one of said harness assemblies,
(e) repetitively carrying out steps (a) to (d) as set forth above to produce said harness means serially.

4,373,262

ELECTRICAL CONTACT WITH LOCKING DEVICE

Roland F. Blakesley, Canton, Ohio, assignor to The Bendix Corporation, Southfield, Mich.

Division of Ser. No. 74,637, Sep. 12, 1979, Pat. No. 4,278,313. This application Sep. 2, 1980, Ser. No. 183,549

Int. Cl.³ H01R *43/04*

U.S. Cl. 29—882 **1 Claim**

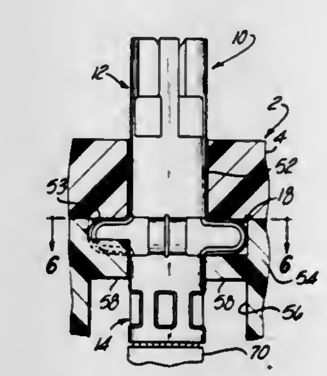

1. A method of making an electrical connector assembly of the type including a dielectric housing having a passage therethrough for receiving a hermaphroditic electrical contact comprised of a tubular body, the steps including:

providing a plurality of radially spaced, longitudinally extending engagement fingers on a forward end portion of the tubular body, each finger including at its distal end portion an offset blade portion;

bending said offset blade portions radially inwardly so that ends converge towards but do not reach the central axis of the tubular body;

forming generally U-shaped locking shoulders medially around the tubular body, said shoulders cooperating to allow said tubular body to undergo longitudinal compression;

forming a number of retention shoulders on said dielectric housing for mounting the contact within the passage, each adjacent pair of retention shoulders being separated by a slot and the number of retention shoulders being equal in number to the number of locking shoulders, each retention shoulder being formed with a tapered entry ramp leading to a groove sized to receive one said locking shoulder;

fitting the tubular body into the passage so that the locking shoulders fit between the slots and are disposed adjacent to the entry ramps; and

twisting the body so that the locking shoulder is forced up the ramp and into the groove.

4,373,263

MOLDED IMPLANT REMOVAL KNIFE

Grover W. Ayers, Vinton, Va., assignor to Eli Lilly and Company, Indianapolis, Ind.

Filed Dec. 17, 1980, Ser. No. 217,448

Int. Cl.³ B26B *29/00*

U.S. Cl. 30—294 **3 Claims**

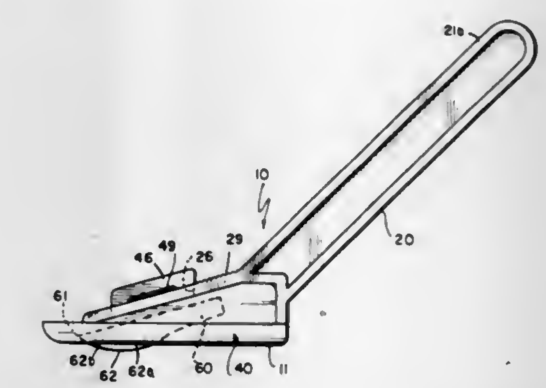

1. An implant removal knife including two pieces adapted for manufacture by molding and for assembly without fasteners, comprising

a molded unitary first piece forming a handle portion and an integral blade-carrying portion extending forwardly from the handle portion at an obtuse angle, said handle portion and blade-carrying portion including a central web and a pair of ribs, said pair of ribs extending outwardly on each side of the central web at the periphery of the handle portion and extending forwardly at an obtuse angle to form an upper planar surface over the blade-carrying portion, one of the ribs at one side of the central web portion of the blade-carrying portion having a central slot to provide a resilient rib portion, said blade-carrying portion further including a flange depending downwardly from the planar surface and forming a straight lower edge intersecting the axis of the handle at an acute angle, and

a molded second piece engaging the blade when assembled to the first piece, said second piece including an upwardly projecting surface having a thickness about equal to the width of the central slot in the blade-carrying portion of the first piece and having a snap rib, an interior surface shaped to engage the blade and a flange depending downwardly and parallel to the interior surface and forming a straight lower edge,

said second piece being assembled to said first piece with upwardly extending surface of the second piece inserted into the central slot of the first piece, said snap rib having passed the resilient rib portion of the first piece so that the resilient rib portion retains the second piece to the first piece with the snap rib above the planar surface and so that the lower edge of the downwardly depending flange of the second piece is parallel to the lower edge of the downwardly depending flange of the first piece and so that said lower edges form a pair of parallel edges spaced outwardly from the central web of the blade-carrying portion and interior surface of the second piece, and whereby upon assembly a blade may be retained between said two pieces and held at an obtuse angle with respect to said handle and at an acute angle with respect to the spaced lower edges of the downwardly depending flanges of the first and second pieces.

4,373,264
INERTIAL GUIDE AND SUPPORT MEANS FOR SABRE SAWS

John D. Hamaker, 112 S. Nelson, Potterville, Mich. 48876
Filed Jan. 7, 1981, Ser. No. 223,046
Int. Cl.³ B27B *19/09*
U.S. Cl. 30—374 15 Claims

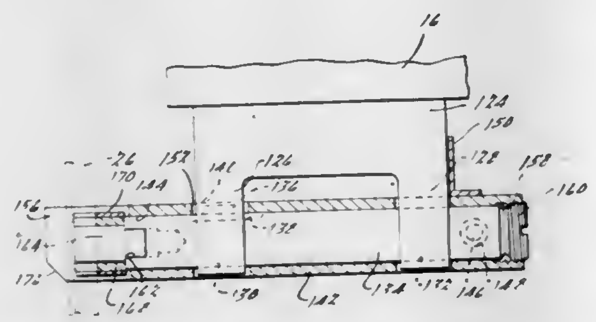

1. An inertial guide and support means for a sabre saw having a housing and a reciprocal saw blade carried by said housing, said inertial guide and support means comprising a relatively heavy base, means attaching said base to said housing, and a guide member associated with said base and bearing against said blade whereby said guide member guides said blade and substantially prevents deflection thereof while transmitting the inertial force of said base to said blade and the reaction of said blade to said base, the portion of said base adjacent said blade being chamfered.

4,373,265
MODIFIED CHAIN SAW

Gerardus van Halderen, P.O. Box 4237, Quesnel, British Columbia, Canada (V2J 3J3)
Filed Mar. 13, 1981, Ser. No. 243,635
Int. Cl.³ B27B *17/02*
U.S. Cl. 30—383 11 Claims

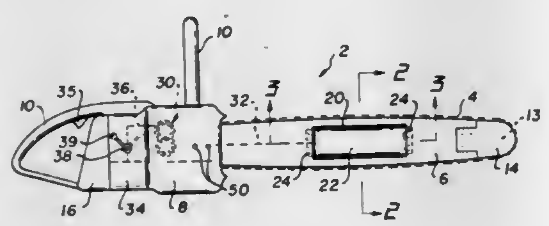

1. In a chain saw having a motor, a cutting chain and a guide bar for the chain the improvement comprising an opening formed in the guide bar;
- a flexible bladder positioned in the opening and located on the guide bar;
- means permitting access to the bladder to insert fluid into the bladder so that the bladder may be expanded.

4,373,266
EQUIPMENT FOR CONTINUOUSLY MEASURING THE LENGTH OF AN ENDLESS MATERIAL BEING WOUND UP INTO A CIRCULAR PACKAGE

Hansruedi Stutz, Dietlikon, Switzerland, assignor to Loepfe Brothers Limited, Zürich, Switzerland
Filed Oct. 20, 1980, Ser. No. 313,208
Claims priority, application Switzerland, Nov. 5, 1980, 8212/80
Int. Cl.³ G01B *19/04*
U.S. Cl. 33—129 1 Claim

1. Equipment for continuously measuring the length of endless material which is being wound-up upon a rotating core into a circular package upon a winding machine which comprises a movable member whose position depends on the diameter of the circular package, wherein the measuring equipment comprises:
- a movable transfer member mechanically coupled to the movable member of the winding machine and provided with three parallel rows of position markers staggered relative to each other in longitudinal direction of the rows;
- stationary transducer means for sensing the position of the transfer member without contacting the same and producing sensing signals during each revolution of the package dependent upon the diameter thereof;
- said stationary transducer means comprising three photoelectrical sensors each cooperating with one of the parallel rows of position markers;

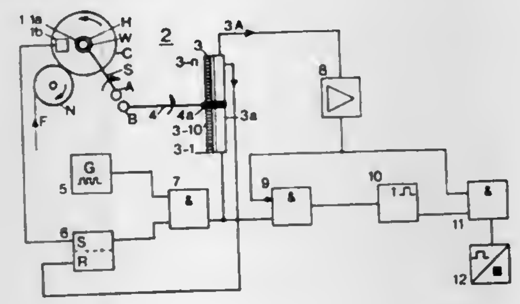

- a cycle signal generator producing a cycle signal during each revolution of the package for controlling the delivery of the sensing signals;
- counting pulse generating means for generating a continuous series of counting pulses independent of the position of the transfer member;
- circuitry for generating a digital length measuring signal from the counting pulses and sensing signals occurring upon each cycle signal; and
- means for summing up consecutive digital length measuring signals.

4,373,267
GAUGE CALIBRATION BLOCK

Goodwin A. Lycan, P.O. Box 23, Stevensville, Mich. 49127
Filed Jul. 13, 1981, Ser. No. 282,526
Int. Cl.³ G01B *3/30*
U.S. Cl. 33—168 R 3 Claims

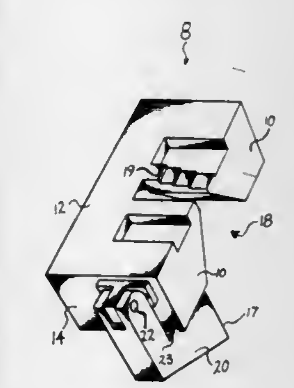

1. In a block for calibrating an offset gauge having longitudinally displaceable bar members having oppositely extending contacts, said block having a top face, and a bottom face, graduated steps in said top face and a longitudinal opening extending through said block from said top face to said bottom face at said steps, said opening constituting means through which said gauge is fitted with said contacts thereof contacting said steps to displace said bar members, the improvement comprising: an arm member pivotally connected to said block and including a side face, said arm member having an inoperative position wherein said arm member extends outwardly from said block, and an operative position wherein said arm member side face forms a selected angle with said block bottom face and therein when in said operative position constitutes means for contacting said gauge to position said gauge within said block opening.

4,373,268
GEAR MEASURING MACHINE FOR INSPECTING HELICAL GEARS

Hans Spaeth, Kloten, Switzerland, assignor to Maag Gear-Wheel & Machine Company Ltd., Zürich, Switzerland
Filed Dec. 8, 1981, Ser. No. 328,750
Claims priority, application Switzerland, Dec. 23, 1980, 9546/80
Int. Cl.³ G01B *5/20, 7/28*
U.S. Cl. 33—179.5 R 5 Claims

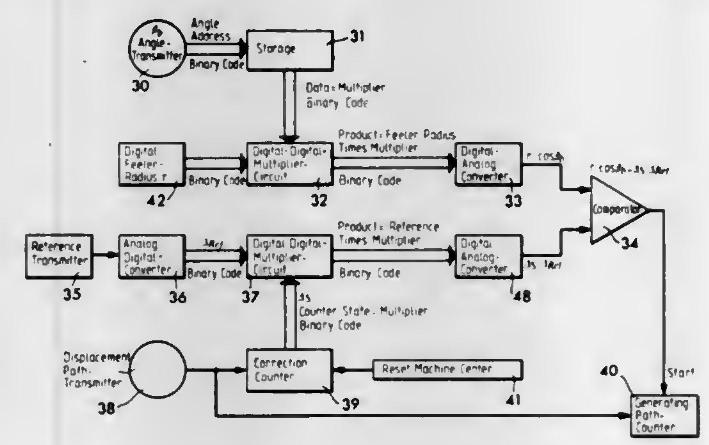

1. A gear measuring machine for inspecting the gear teeth of helical gears, comprising:
- a feeler having a feeler tip;
- a radius transmitter;
- an angle transmitter;
- a storage connected with said angle transmitter and serving for the storage of trigonometric angle functions;
- said angle transmitter delivering to said storage binary coded addresses corresponding to a set helix angle;
- said storage for trigonometric functions delivering output data constituting a binary coded first multiplier indicating the helix angle of the gear tooth;
- a first digital-digital multiplier circuit to which there is delivered said multiplier;
- said digital-digital multiplier circuit multiplying said binary coded multiplier with a binary coded value of the feeler tip radius and delivering an output signal;
- said radius transmitter delivering said binary coded value of the feeler tip radius to said digital-digital multiplier circuit;
- a comparator having a first input and a second input;
- a first D/A-converter connected with said comparator;
- the output signal of said first digital-digital multiplier circuit being applied to the first input of said comparator by means of said first D/A-converter;
- a correction counter;
- a second digital-digital multiplier circuit having a first input;
- a displacement path transmitter for delivering a binary coded value to the first input of said second digital-digital multiplier by means of said correction counter;
- said binary coded value of the displacement path transmitter being counted in steps from the center of the machine;
- said second digital-digital multiplier circuit having a second input at which there are received binary coded reference values;
- said reference values constituting the quotient of the product delivered by the first digital-digital multiplier circuit and the steps;
- said second digital-digital multiplier circuit forming the product of said steps and said reference values;
- a second D/A converter;
- said second digital-digital multiplier circuit supplying said product to said second input of said comparator by means of said second D/A-converter; and
- a generating path counter;
- said comparator, upon receiving two essentially equal input signals, delivering an output signal for starting said generating path counter.

4,373,269
ADJUSTMENT MECHANISM

Darrel L. Doliber, and O'Dell M. Keil, both of Tempe, Ariz., assignors to Litton Systems Inc., Beverly Hills, Calif.
Filed Nov. 3, 1980, Ser. No. 202,911
Int. Cl.³ F41G *1/38*
U.S. Cl. 33—246 13 Claims

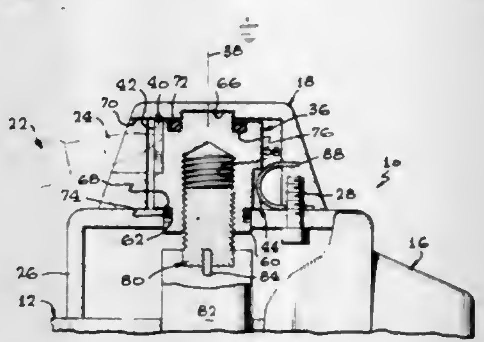

1. An adjustment assembly particularly suitable for actuation by a lever, comprising:
- (a) a housing member;
- (b) a cap member connected to said housing member;
- (c) rotatable drive means constrained between said cap member and said housing member, said drive means capable of being selectively rotated by said lever;
- (d) a limited access aperture in said cap member sized to permit insertion of said lever into said cap member for rotation of said drive means; and
- (e) non-rotatable driven means engaged by said drive means, said driven means exhibiting movement substantially parallel to the axis of rotation of said drive means when said drive means is rotated.

4,373,270
SUNDIAL

Russell M. Ousley, 3640 Santiago Dr., Florissant, Mo. 63033
Filed Jun. 3, 1981, Ser. No. 269,909
Int. Cl.³ G04B *49/00*
U.S. Cl. 33—270 5 Claims

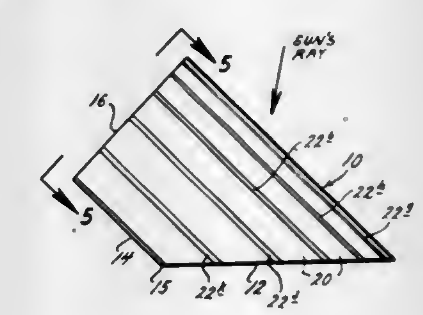

1. A sundial, comprising a translucent body member having a semi-cylindrical surface with a plurality of relatively clear, light-transmitting, spaced narrow flat surfaces thereon separated by relatively dark surfaces, the flat surfaces being spaced apart one from another around the semi-cylindrical surface by a predetermined distance representing a chosen time interval in travel of sunlight across the earth from east to west, a diametric surface on the member with an index marked thereon parallel to the cylindrical axis of the semi-cylindrical surface, the body member being adapted to be disposed in sunlight with its cylindrical axis at least approximately parallel to the earth's axis, so that the beam transmitted through the flat surface that ends nearest the index represents the apparent time.

4,373,271
SOLID STATE COMPASS
Larry T. Nitz, Sterling Heights, Mich., assignor to General Motors Corporation, Detroit, Mich.
Filed Dec. 11, 1980, Ser. No. 215,268
Int. Cl.³ G01C *17/30*
U.S. Cl. 33—361 **3 Claims**

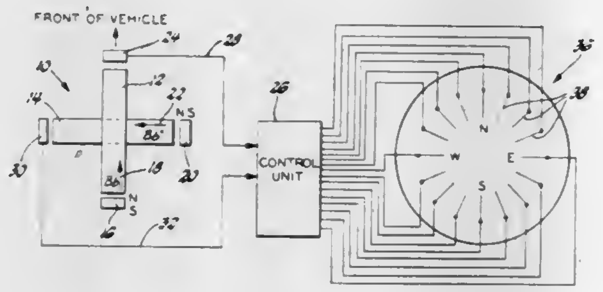

1. A motor vehicle compass comprising:
perpendicularly oriented ferromagnetic core members mounted in a predetermined relationship with respect to the heading of said vehicle;
sensing means associated with each of said core members for providing an electrical signal determined as a function of the magnetic field strength therein, the magnetic field strength in said core members varying as a function of the orientation of said core members relative to the earth's magnetic field;
means responsive to said sensing means for summing said electrical signals to form a composite field intensity signal;
means responsive to the relative magnitudes of said electrical signals and to the amplitude of said composite signal for developing a direction signal indicative of the heading of the vehicle; and
means responsive to said direction signal for visually displaying the heading of the vehicle.

4,373,272
SYSTEM FOR CONTROLLING SPOUTED BED INLET CONDITIONS
Thomas B. Jones, Fort Collins, Colo.; Morris H. Morgan, Clifton Park, and Peter W. Dietz, Delanson, both of N.Y., assignors to General Electric Company, Schenectady, N.Y.
Filed Sep. 25, 1980, Ser. No. 190,816
The portion of the term of this patent subsequent to Sep. 21, 1999, has been disclaimed.
Int. Cl.³ F26B *17/00*
U.S. Cl. 34—57 A **14 Claims**

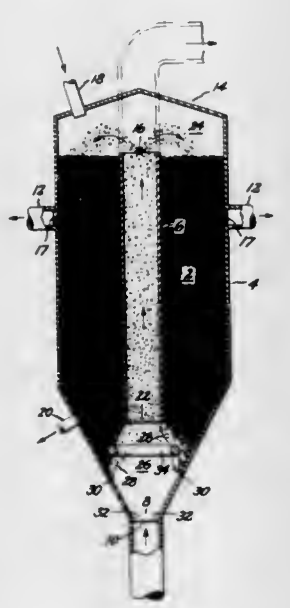

1. A spouted bed device comprising;
a vessel for containing semi-insulating granular material which vessel includes a fluid inlet disposed in a vertically lower section thereof;
a tubular member having an inlet located within the vessel vertically above and in flow communication with the vessel fluid inlet; and
means for forming an electric field within the vessel which field impinges upon the tubular member inlet.

4,373,273
AIR RING HAVING A CIRCULAR ARRAY OF A LARGE MULTIPLICITY OF SUBSTANTIALLY PARALLEL CELL-LIKE PASSAGES IN THE AIR FLOW PATH LEADING TO THE OUTLET
Robert Church, Bartlett, N.H., assignor to Gloucester Engineering Co., Inc., Gloucester, Mass.
Filed Apr. 13, 1981, Ser. No. 253,549
Int. Cl.³ F26B *19/00;* **B29D** *7/20*
U.S. Cl. 34—104 **7 Claims**

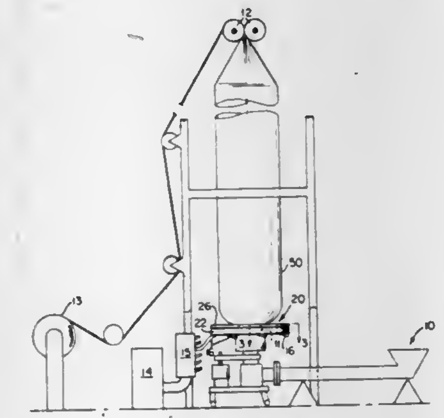

1. In an air ring of the type mounted concentrically about a moving extruded tube of plastic at a point close to where the plastic emerges from an annular die,
the air ring having a circular entry plenum fed by generally tangential inlet conduit means and means to guide the air inwardly toward the surface of the tube,
the flow of air in said plenum having a circumferential component of velocity attributable to the swirling flow in said plenum,
said air ring having at least one outlet adjacent the surface of the tube for discharging air in a desired direction for exposure of the cooling air to the tube surface, and
the air ring having at least one internal device lying inwardly of said plenum for modifying the air flow to make the flow more uniform before it reaches said outlet,
the improvement wherein said internal device comprises a circular array of a large multiplicity of substantially parallel, generally radial, convergently arranged, centrally directed, cell-like passages in the air flow path leading inwardly to said outlet,
the individual cell-like passages having orthogonal lateral dimensions (X and Y directions) transverse to the local radial direction of flow (Z direction) less than about one-half the air flow length (Z dimension) of said passages, and being adapted to divide said air flow path leading to said outlet into a multiplicity of individual cell-like flow paths,
the aggregate cross-sectional flow area presented by said array of cell-like passages comprising at least 80% of the inlet surface of said internal device, said air ring adapted to deliver a general air flow to said array containing a circumferential component of motion, and
said array adapted to receive said general flow of air and to divide said flow momentarily into a multiplicity of discrete, parallel, radially oriented, centrally directed small streams separated from each other in both X and Y coordinates, and to cause said streams to subsequently merge into a second generally radial, convergently directed flow toward the surface of said plastic tube,
the momentary division of said general flow by said array into said multiplicity of streams being effective to eliminate said circumferential component of velocity in said air flow and to orient the direction of flow of said air and remove major turbulences and vortices in both X and Y coordinates with relatively little pressure drop occurring across said internal device.

4,373,274
ENCLOSURE ARRANGEMENT FOR WARMED FOOTWEAR
William J. Michalski, P.O. Box 18, Bloomingdale, N.J. 07403
Filed Feb. 20, 1981, Ser. No. 236,204
Int. Cl.³ A43B *7/02*
U.S. Cl. 36—2.6 **22 Claims**

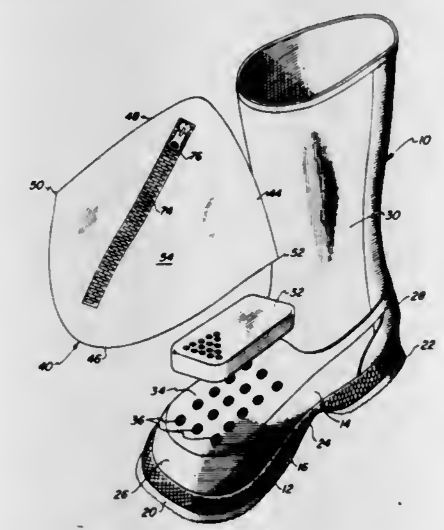

1. An enclosure arrangement for use in connection with a boot whereby a booted foot will be warmed selectively by a warming device, the boot having a longitudinally extending sole and an upper extending altitudinally from a welt area at the intersection of the sole and the upper, the sole including a toe end, a heel end and a shank between the toe end and heel end, and the upper including a toe adjacent the toe end, a counter adjacent the heel end, a sheath extending altitudinally between the toe and the counter and an apertured instep portion located between the toe and the sheath, the enclosure arrangement comprising:
an enclosure member having a wall, the wall including first edge areas for extending generally longitudinally along the welt area between the toe end of the sole and the shank, and second edge areas for extending generally altitudinally along the upper between the welt area, adjacent the shank, and a location on the sheath spaced altitudinally from the apertured instep portion a distance sufficient to establish a chamber overlying the apertured instep portion between the toe of the upper and the sheath;
means for joining the first and second edge areas with the boot so as to secure the enclosure member to the boot and establish a seal along said edges for sealing the chamber;
an access opening in the wall of the enclosure member and juxtaposed with the chamber to enable selective access to the chamber for placement therein of the warming device; and
closure means for selectively opening and closing the access opening.

4,373,275
FOOTWEAR
Graeme K. Lydiard, Auckland, New Zealand, assignor to Lydiard Shoe Co. Ltd., Auckland, New Zealand
Filed Oct. 3, 1980, Ser. No. 193,464
Claims priority, application New Zealand, Oct. 19, 1979, 191885
Int. Cl.³ A43B *5/00, 23/26*
U.S. Cl. 36—129 **1 Claim**

1. An athletic shoe, comprising a molded sole with an upper attached thereto characterized in that the forward section of the upper terminates short of the toe of the sole so as to form an opened toed shoe, the upper being affixed to the remainder of the sole to extend upwardly from the periphery thereof to form a heel portion joined to lateral portions, each lateral portion incorporating lace receiving apertures adjacently

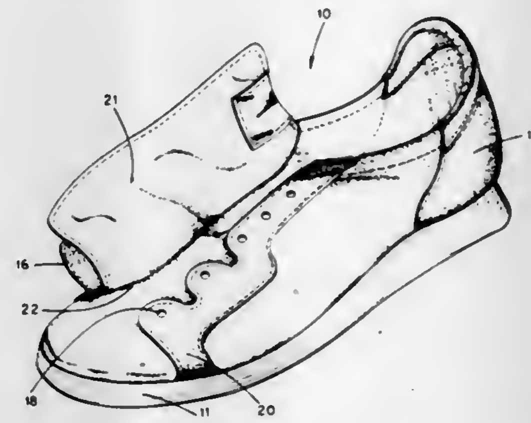

along an upper edge thereof save for a section thereof bordering the heel portion to thus define in conjunction with the heel portion an ankle opening, a tongue attached along a lateral edge section thereof to one of the lateral sections of the upper, adjacent the attachment of the upper to the sole, the tongue being arranged to be disposed on lacing of the shoe beneath both sections of the upper incorporating the lace apertures.

4,373,276
DEVICE FOR CONVEYING A SLURRY, SUCH AS SAND OR GRAVEL OR THE LIKE, LYING UNDER WATER
Ludwig L. Schnell, Aufhausen, Fed. Rep. of Germany, assignor to Schuttgutfordertechnik AG, Fed. Rep. of Germany
Filed Feb. 17, 1981, Ser. No. 235,318
Claims priority, application Fed. Rep. of Germany, Feb. 15, 1980, 3005669
Int. Cl.³ E02F *3/88*
U.S. Cl. 37—61 **14 Claims**

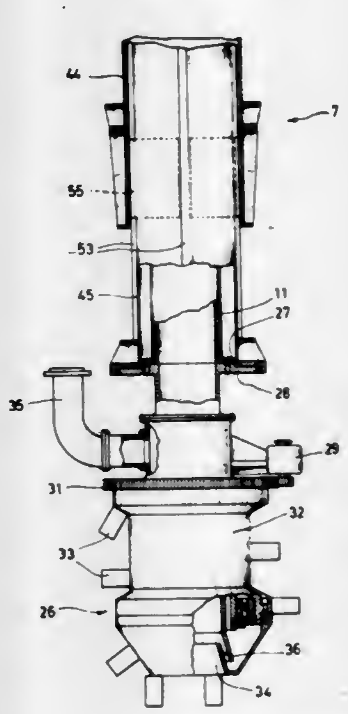

1. Dredging apparatus for conveying bulk material such as sand, gravel or the like lying under water, said apparatus comprising the combination of
a dredger body,
a telescopic tube having a plurality of sections telescoping into one another, the upper end of said telescopic tube being fixed to said dredger body,
a conveyor head attached to the lower end of said telescopic

tube for collecting bulk material and directing it into said telescopic tube,
a flexible hose of fixed length extending through the interior of said telescopic tube and permitting telescoping movement of said tube sections thereover, and
a hose reel mounted on said dredger body and connected to the upper end of said hose for winding and unwinding said hose during telescoping movement of the sections of said telescopic tube.

4,373,277
CUTTER EXTENSION CONE
Edward Cucheran, 23 Dunbar Crescent, Winnipeg, Canada
Filed Dec. 7, 1981, Ser. No. 328,136
Int. Cl.³ E02F *3/92*
U.S. Cl. 37—67 **2 Claims**

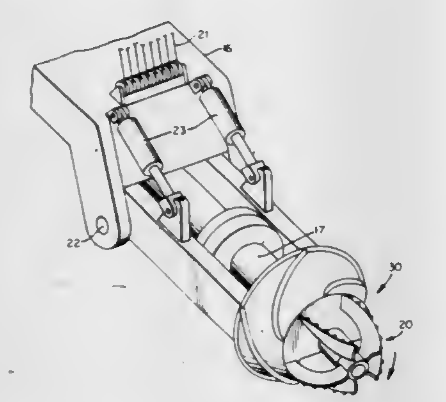

1. A cutter extension cone for attachment to a cutter of a hydraulic dredge, said cutter having blades forcing material toward a suction orifice, comprising:
(a) a generally circular front section adapted to attach to the rear section of a cutter;
(b) a generally conical section extending rearwardly from said front section, said section having a conical surface, said one increasing in diameter toward the rear.
(c) a series of generally spiral helical blades along the surface of the cone extending from the front to the rear of the said cutter extension cone;
(d) said spiral helical blades on said cutter extension cone having a from front to rear in spiral direction the direction of rotation;
(e) said cutter extension cone attached to and rotating with said cutter as a unit
whereby said cutter extension cone smooths the bottom and forces material forward the suction orifice.

4,373,278
SINGLE LINE DEEP-SEA BUCKET AND RELEASE
Edward E. Myrick, Rte. 2, Box 223, Killen, Ala. 35645
Filed May 15, 1981, Ser. No. 263,917
Int. Cl.³ B66C *3/02;* **E02F** *3/44*
U.S. Cl. 37—71 **12 Claims**

1. A single line deep-sea bucket and release comprising in combination:
a hoisting frame connected by a single hoisting cable to the operating water surface area;
a bucket support frame measurably displaceable downwardly from said hoisting frame a selected operable distance;
nesting means on said bucket support frame and hoisting frame to selectively receive and seat said hoisting frame and bucket support frame in nesting engagement;
said bucket support frame having a bail with an upward grippable projection thereon and dependent linkage supporting a clamshell with cable operating means thereon activating the opening and closing of said shell responsive to the measured withdrawal of said hoisting frame from the bucket support frame;
tether lines depending from said hoisting frame and connecting said hoisting frame and bucket support frame and guide means on the support frame limiting and guiding the relative displacement of the hoisting frame therefrom;
coupling means disposed between said grippable bail projection and the hoisting frame displaceably securing the end of said cable operating means of said clamshell to hoist and operate the same;
locking means on said hoisting frame releasably securing said coupling means, with auxiliary guide means therebe-

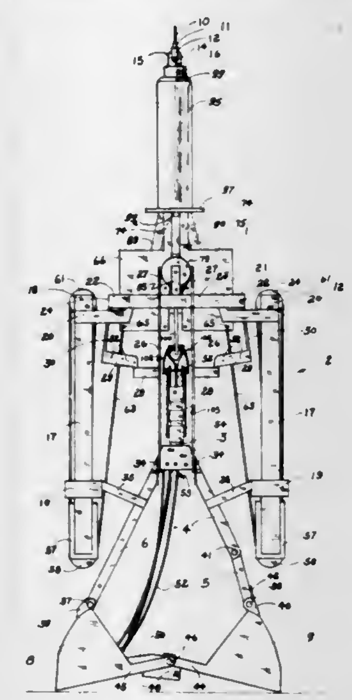

tween guiding and preventing torsion descent of said coupling means, and allowing a selective release and descent of said cable operating means and an emergency opening of said clamshell;
and emergency release means on said hoisting frame integral therewith and coacting with a messenger received along said single hoisting cable to release said locking means for said coupling and activate an emergency opening of the clamshell in the depths of said body of water.

4,373,279
FRAME STRAIGHTENING AND SUPPORTING DEVICE
Jack Abel, 16-24 202 St., Bayside, N.Y. 11360, and Cora Abel, 12 Lee St., Cambridge, Mass. 02139
Filed Sep. 5, 1980, Ser. No. 184,521
Int. Cl.³ G09F *1/12*
U.S. Cl. 40—155 **1 Claim**

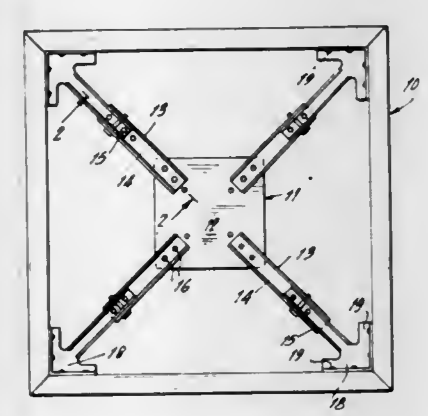

1. A frame supporting and tightening device comprising a rigid central plate disposed parallel to the plane of the frame, a plurality of adjustable segmented arms of channel shaped cross-section secured at one end to the central plate and extending outwardly thereof, said segmented arms comprising an inner segment secured to the central plate and an outer segment slidably carried by the inner segments, means to adjustably secure the segments together, at least one bracket secured at the free end of each of the segmented arms and means to vary the position of the arm segments with respect to each other and the central plate to apply a desired force to portions of the frame.

4,373,280
X-RAY VIEWING APPARATUS
Samuel L. Armfield, III, 522 Foltz Dr., Verona, Pa. 15147
Filed Oct. 14, 1980, Ser. No. 196,350
Int. Cl.³ G02B *27/02;* **A47F** *7/14;* **B60R** *1/02;* **A47G** *1/16*
U.S. Cl. 40—367 **5 Claims**

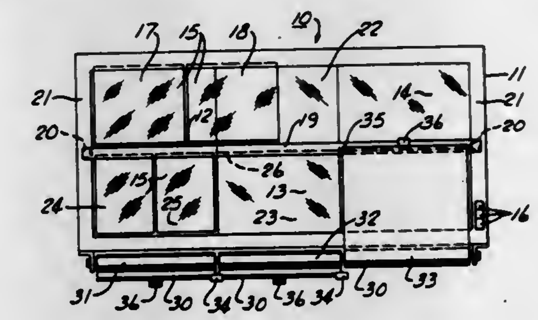

1. An adaptor for an X-ray viewer having an illuminated viewing panel, comprising, at least one horizontal cross bar secured across said viewing panel and movable to different vertical positions thereacross, means on a bottom edge of said cross bar to detachably retain a film edge, shade means on said X-ray viewer movable to shade lower areas of said illuminated panel while selectively permitting upper areas thereof directly above said lower shaded areas to remain unshaded, said shade means including at least two shades positioned side-by-side, including means to detachably secure said shade to said cross bar when said shades are drawn.

4,373,281
DEVICE FOR DISPLAYING INDICIA
James A. Sebastian, 24 Pinecrest Dr., Hastings-on-Hudson, N.Y. 10706
Division of Ser. No. 870,636, Jan. 19, 1978, Pat. No. 4,221,064, which is a continuation of Ser. No. 675,966, Apr. 12, 1976, abandoned. This application Jul. 9, 1980, Ser. No. 167,333
Int. Cl.³ G09F *11/00, 11/04;* **A63F** *1/18;* **A63B** *71/00*
U.S. Cl. 40—491 **17 Claims**

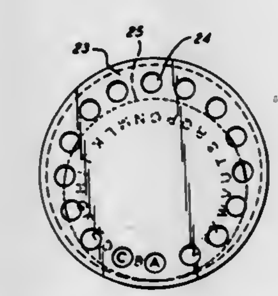

1. A device for displaying indicia comprising:
(a) at least one cover member of circular peripheral shape having at least one visual display means on at least one surface thereof:
(b) guide means forming a slot having a continuous circular periphery, said guide means being mounted on the cover member and said slot extending about the periphery of a predetermined area of the cover member, and
(c) at least one display member having a continuous circular periphery disposed in the slot formed by the guide means and rotatably and slidably movable with respect to said cover member about the predetermined area of the cover member, said display member having a smaller area than that of said predetermined area and being adapted to roll relative to the cover member in point to point continuous contact with the continuous circular periphery of the slot extending about the predetermined area in a plane parallel to the plane of the cover member, the display member containing on its surface at least two indicia prepositioned on said display member so that each is capable of registering with said visual display means in a different predetermined angular position of said device about a substantially horizontal axis in a substantially vertical plane, said display member shifting position and rotating with respect to said cover member in point to point continuous contact with the continuous circular periphery of the slot under the force of gravity in response to rotation about the substantially horizontal axis of said device from a first angular position into a second angular position of said device in the substantially vertical plane in order to change the registry of said indicia with respect to said visual display means.

4,373,282
THIN-PANEL ILLUMINATOR FOR FRONT-LIT DISPLAYS
Robert Wragg, Glendora, Calif., assignor to Hughes Aircraft Company, Culver City, Calif.
Continuation of Ser. No. 106,952, Dec. 26, 1979, abandoned. This application May 29, 1981, Ser. No. 268,512
Int. Cl.³ G09F *13/18, 13/00;* **F21V** *7/04*
U.S. Cl. 40—546 **8 Claims**

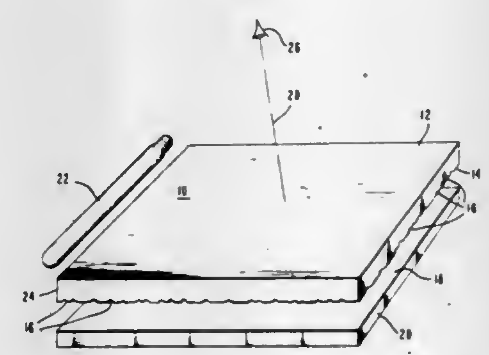

1. A front-lit illumination panel for providing directional illumination to a display surface comprising:
(a) an optically transparent substrate having first and second parallel opposing major surfaces, said first major surface having a multiplicity of irregular depressions therein; and
(b) an optically transparent material having an index of refraction closely matching that of said substrate partially filling the depressions in said substrate so as to give each of said depressions a regular concave, meniscus shaped surface, each said depression thereby having gently sloping sides and a relatively shallow slope angle to said first major surface so that light from the interior of said substrate is selectively aimed through either said first or second major surface, the light exiting through said first major surface being directed toward a display surface co-extensive with and adjacent to said first major surface and the light exiting said second major surface being directed away from a viewer observing said display through said substrate.

4,373,283
ADVERTISING SIMULATED NEON SIGN DISPLAY
William M. Swartz, Highland Park, Ill., assignor to Embosograph Display Mfg. Co., Chicago, Ill.
Filed Jul. 6, 1981, Ser. No. 280,700
Int. Cl.³ G09F *13/04*
U.S. Cl. 40—564 **8 Claims**

1. A simulated neon tube sign comprising a panel having a message portion which is clear and colorless and is transparent to visible light surrounded by a portion that is opaque to visible light, a printing on the message portion of a shape simulating a

neon tube and of a color of such tube when it is electrically actuated, said transparent area being a flat surface, said panel having a front side from which it is to be viewed and a reverse side on which the message is formed, said printing comprising a substantially transparent pigment and said opaque portion including an opaque reflecting medium on the back of the panel that reflects light impinging thereon from the rear of the panel in a direction rearwardly of the panel, a reflector located rearwardly of the panel, a light source comprising a fluores-

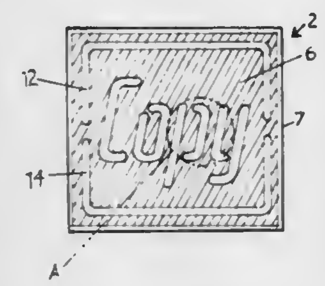

cent tube of a diameter substantially greater than the diameter of the simulated neon tube, said light source being between the reflector and the panel for illuminating the rear side of the panel, said reflector receiving light from the rear of the light source and also light reflected rearwardly of the panel by the afforesaid opaque reflecting medium on the reverse side of the panel and said reflector reflecting the incident light back towards said panel to increase the light passing through the transparent dye forming the simulated neon tube.

4,373,284
ILLUMINATED HOUSE NUMBER SIGN
Donald L. Crane, 309 Chicago Rd., Oswego, Ill. 60543
Filed Feb. 20, 1981, Ser. No. 236,336
Int. Cl.³ G09F *13/04*
U.S. Cl. 40—576 **7 Claims**

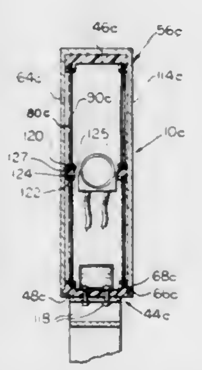

1. An illuminated house address sign comprising:
a rectangular frame member having
an elongated top wall,
an elongated bottom wall,
two end walls connecting the ends of said top and bottom walls, and
at least one open face,
a transparent rectangular cover member sized to slip over said frame member and to be frictionally retained in assembly therewith by means of a circumferentially sealing rib mating with a circumferential channel such that said open face on said frame member is enclosed and made weather tight,
at least one track member extending around the interior of said frame and cover assembly adjacent said open face,
said track member having a groove therein oriented perpendicular to the said walls of said frame and open to the interior of said frame,
at least one selectively removable track member extending across said open face of said frame member in the same plane as said fixed track member and parallel with said bottom wall,
said track member forming pairs of opposed grooves,
a plurality of plate members sized to be received in said opposed groove pairs,
said plate members having light transmitting portions therein in the shape of individual letters and numbers,
a light source interior of said track members,
a translucent sheet member sized to be received in said opposed groove pairs interior of said plate members
to diffuse the light from said light source, whereby a single or multi-level message can be displayed on at least one face of said sign by inserting or removing track members and placing appropriate plate members in abutting sequence in said opposed groove pairs to spell out the desired message.

4,373,285
GUN MUZZLE LOADER
Kenneth M. Grout, P.O. Box 190, Littleton, N.H. 03561, and David W. Presby, Hadley Rd., Sugar Hill, N.H. 03585
Filed Sep. 29, 1980, Ser. No. 191,397
Int. Cl.³ F41C *27/00*
U.S. Cl. 42—90 **4 Claims**

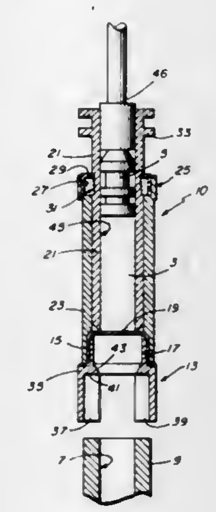

1. A loading device for a muzzle loading gun comprising:
(a) an attachment assembly provided with an elongated bore extending from the lower to the upper end of said assembly, the lower end of said assembly being adapted to be placed on the end of a gun barrel with said bore substantially in alignment with the bore of said gun barrel;
(b) a frangible septum held across the bore of said assembly substantially below its upper end, said bore above said septum being adapted to receive a powder charge and a projectile;
(c) said assembly including an elongated sleeve slidably mounted in said assembly above said septum, the bore of said sleeve comprising that portion of said assembly adapted to receive said charge and projectile;
(d) the lower edge of said sleeve being adapted to sunder said septum when forced through the location of said septum whereby said lower edge comprises means for sundering said septum.

4,373,286
REACTION GILL NET
Thomas E. Robison, Sea Cliff South, No. 1098, Daphne, Ala. 36526
Filed Oct. 16, 1980, Ser. No. 197,746
Int. Cl.³ A01K *74/00*
U.S. Cl. 43—10 **5 Claims**

1. A gill net assembly comprising a frame comprising a top component, a bottom component, and at least one axially extending support interconnecting said top and bottom components; said top and bottom components each comprising a plurality of interconnected concentric rings, and said at least one axially extending support comprising a plurality of sets of

a plurality of bars, each set of a plurality of bars disposed to define the exterior surface of a cylinder or cone, the respected sets being substantially concentric;
a bait-enclosing structure;
a first net having openings formed therein large enough to allow small fish to insert their heads through the openings in an attempt to feed on bait in the bait-enclosing structure and catch their gills on the net if withdrawal from the opening is attempted;
means for mounting said first net to said frame adjacent a central portion thereof enclosing the sides of said frame and surrounding said bait-enclosing structure, said means comprising means formed on said frame components for attaching said first net to said components;

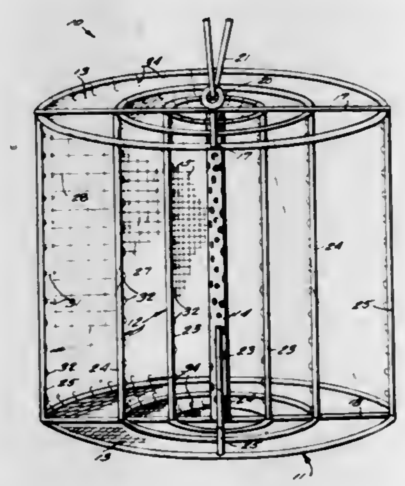

a second net, said second net having openings large enough to allow small fish which would be caught by said first net to pass completely therethrough, but small enough to allow larger fish to insert their heads through said second net openings and catch their gills on the second net if withdrawal from the openings is attempted; means for mounting said second net to said frame and substantially concentrically with said first net, and radially outwardly therefrom, and enclosing the sides of said frame, said means including means formed on said frame components for attaching said second net to said components; and
netting covering said top and bottom frame components.

4,373,287
FISHING TIP-UP
Paul F. Grahl, Rte. 1, Eden, Wis. 53019
Filed Oct. 3, 1980, Ser. No. 193,585
The portion of the term of this patent subsequent to Aug. 25, 1998, has been disclaimed.
Int. Cl.³ A01K *97/01*
U.S. Cl. 43—17 **1 Claim**

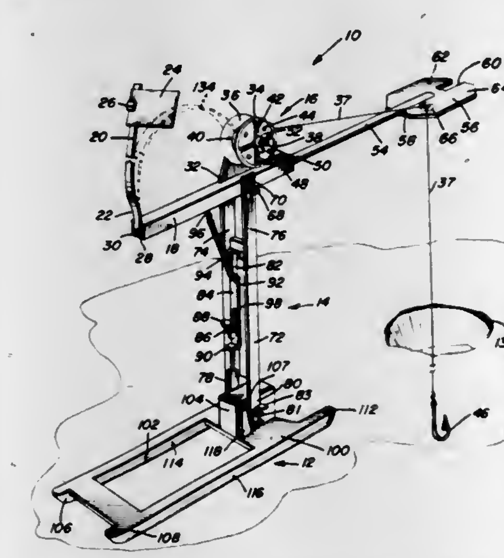

1. A fishing tip-up for supporting a fish hook at a predetermined depth in the water, jigging the hook vertically and signaling that a fish has moved the hook without manipulation by a fisherman, said tip-up comprising an elongated base member adapted to be positioned on a supporting surface with one end adjacent an edge of the body of water in which a fish hook is to be placed, an elongated body member extending upwardly from said base member, means pivotally connecting the lower end of the body member to the base member adjacent the end thereof disposed adjacent the edge of the body of water with the length of the body member above the base member being generally equal to the distance between the pivotal connecting means and the other end of the base member to enable the body member to overlie and co-extend with the base member when pivoted to a collapsed position, said pivotal connecting means including means to releasably lock the body member in adjustable angular relation to the base member, an elongated rocker arm disposed generally horizontally at the upper end of the body member, means pivotally connecting the rocker arm to the upper end of the body member for pivotal movement of the rocker arm about a generally horizontal axis with the pivotal connection being intermediate the ends of the rocker arm but offset from the center thereof to provide an elongated portion extending substantially beyond the end of the base member disposed adjacent the edge of the water, a wind vane rigidly mounted on the outer end of the elongated portion of the rocker arm and adapted to be disposed in overlying relation to a portion of the body of water, a spool frictionally and rotatably journaled on the rocker arm generally in alignment with and above the pivotal connection between the rocker arm and body member, a fishing line wound on said spool, a fish hook on the end of the fishing line, said wind vane including an aperture adjacent the inner edge thereof receiving the fishing line for movement therethrough when the spool is rotated and providing an anchor for the fish hook when the fishing line is wound onto the spool with the barb of the hook underlying the vane to reduce the possibility of the fish hook injuring a person handling the device and reduce entanglement with other fishing equipment, a flexible resilient member attached to the end of the rocker arm remote from the wind vane and extending upwardly therefrom, a signal flag on the upper end of the resilient member, said resilient member having a length permitting it to be bowed with the upper end engaged with the surface of the spool when in a "set" condition and being released therefrom by rotation of the spool when the fishing line is unwound therefrom by a fish taking the hook thereby enabling the resilient member to return to an upstanding position with the flag being readily observable to indicate that a portion of the fishing line has been pulled from the spool, a tension coil spring extending diagonally from the rocker arm to the body member on the side of the pivotal connection between the rocker arm and body member remote from the wind vane, means adjustably connecting one end of the spring to said body member to balance the rocker arm and enable oscillation thereof about the pivotal connection between the rocker arm and body member, said wind vane being in the form of a plate having bendable flaps thereon to vary the force exerted thereon by wind impinging thereon with movement of the wind vane being responsive to wind variations to jig the hook up and down as the rocker arm oscillates, said means connecting one end of the spring to the body member including an elongated slotted member received in a longitudinal recess in the body member, a fastener extending through the slotted member and body member to retain the slotted member guided by the recess and longitudinally adjusted, said slotted member including a laterally extending tab handle at the lower end to facilitate longitudinal movement of the slotted member when the fastener is loosened, said base member including longitudinal rails having extending ends to facilitate winding of fishing line thereon for storage, said rails being of substantially V-shaped configuration to enable the base member to be easily lifted from an ice surface even though the lower edges of the rails may be frozen into the ice.

4,373,288
SIGNALLING MEANS FOR A CRUSTACEAN TRAP
Michael P. McCrink, 43 Chapin Ave., Red Bank, N.J. 07701
Filed Dec. 1, 1980, Ser. No. 211,629
Int. Cl.³ A01K *69/00, 69/08*
U.S. Cl. 43—100 **8 Claims**

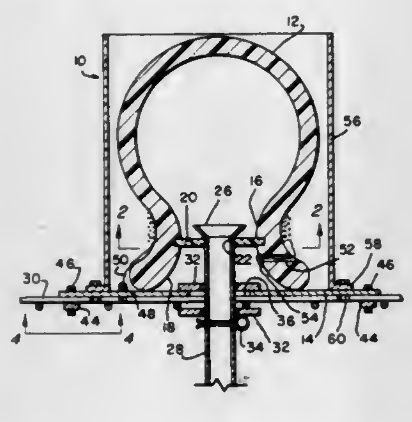

1. Signalling means, for replaceable attachment thereof to a crustacean trap, which trap has an open-work wire, or equivalent-structured, substantially flat, top grid, said signalling means comprising:
means defining a substantially flat base for emplacement thereof, selectively, in any one of a plurality of positions, upon such an open-wire, or equivalent-structured, substantially flat, top grid of a crustacean trap;
means for removably retaining said base upon such top grid:
a buoyant element; and
means coupled to said base releasably engageable with said buoyant element (a) for holding said element on such top grid, and (b) for suspending bait within such trap below such top grid.

4,373,289
TOY TRAP DOOR MECHANISM
Raymond J. Douglas, San Pedro; Herbert May, Torrance; Jeffrey B. Poznick, La Crescenta, and Roger H. Sweet, Long Beach, all of Calif., assignors to Mattel, Inc., Hawthorne, Calif.
Filed Dec. 21, 1981, Ser. No. 332,642
Int. Cl.³ A63H *33/00*
U.S. Cl. 46—1 R **6 Claims**

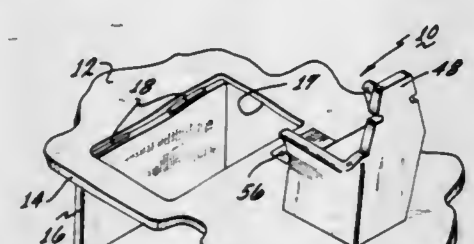

1. A toy trap door mechanism, comprising:
a trap door;
a generally flat panel designed to support the trap door;
means for pivotably mounting the trap door within the panel so that the trap door may swing from a latched position parallel with the panel to an unlatched position below the panel;
an object designed to be rotatably mounted to the upper surface of the panel;
means for rotatably mounting the object to the panel including a pin depending from the object and extending through an opening in the panel so that the object can be rotated about the pin in a plane parallel to the plane of the panel; and
means mounted underneath the panel for operatively connecting the object to the trap door to both latch and unlatch the trap door, whereby when the object is rotated to a first object position the trap door is latched in the closed position, and when the object is rotated to a second object position, the trap door is unlatched, and where the means for operatively connecting the object to the trap door includes
an actuating lever;
means for supporting the lever underneath the panel between the object and the trap door including pivotably attaching the lever to the pin so that the lever may pivot freely about the pin in a manner which permits the object to rotate without causing the lever to pivot;
means for pivoting the lever to a first lever position where a first portion of the lever overlaps a portion of the trap door to latch the door closed; and
means for pivoting the lever to a second lever position were the first portion of the lever does not overlap the portion of the trap door, so that the door may swing to the unlatched position.

4,373,290
WHEELED TURBINE-POWERED TOY VEHICLE AND LAUNCHER APPARATUS
Adolph E. Goldfarb, 4614 Monarca Dr., Tarzana, Calif. 91356, and Delmar K. Everitt, Woodland Hills, Calif., assignors to Adolph E. Goldfarb, Westlake Village, Calif.
Filed Jun. 22, 1981, Ser. No. 275,982
Int. Cl.³ A63H *29/16, 29/20*
U.S. Cl. 46—44 **11 Claims**

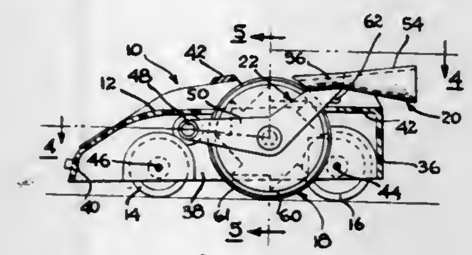

1. A wheeled turbine-powered toy vehicle comprising:
(a) a frame;
(b) rotatable ground-engaging wheel means on the frame proportioned and arranged to maintain the toy vehicle upright, and including at least one drive-wheel;
(c) drive means on the frame and operatively coupled to said drive wheel for imparting rotation to said drive wheel, said drive means including a rotatably energy-storing fly wheel member and an air turbine operatively coupled to said fly wheel member to impart rotation to the fly wheel member; and
(d) user blow means mounted on said frame for directing a flow of user blown air against said air turbine so as to cause it to rotate, said blow means comprising a mouthpiece open to the atmosphere for the user to place into his or her mouth and blow air into, conduit means with an outlet, said conduit means being connected to and in communication with the mouthpiece for directing air blown into the mouthpiece out of said outlet, said outlet being positioned adjacent to said air turbine so as to direct air at said air turbine so as to cause it to rotate, said drive wheel being mounted on the frame for generally vertical movement toward and away from a supporting surface, said drive wheel, and fly wheel, and said turbine being combined in a single unit rotatably mounted on a carrier which is in turn rotatably supported on said frame, said drive wheel being free floating whereby it is free to rest by virtue of its weight, upon the surface supporting the toy vehicle.

4,373,291
PLURAL ACROBATIC FIGURES ON A STRING
Sun Chun-Jung, 10911 Orleans Way, Kensington, Md. 20795
Filed Nov. 24, 1980, Ser. No. 209,659
Int. Cl.³ A63H *3/18*
U.S. Cl. 46—133 **14 Claims**

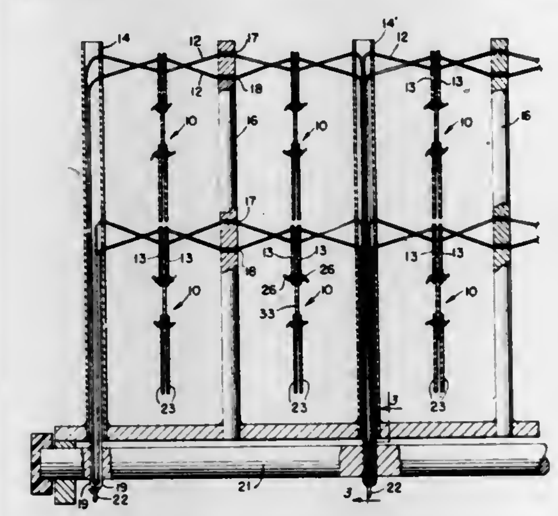

1. A toy comprising
a plurality of figures each having limbs and body portion with holes through a pair of said limbs,
a base having a supporting surface to support said plurality of figures having openings therethrough,
at least two hollow posts supported over said openings in said supporting surface with their hollow portions communicating with respective ones of said openings,
means rotatably mounted in said base beneath said supporting surface,
and a string having a double strand with said double strand connected to said rotatable means and passing from one point of relatively non-rotatable connection to said rotatable means through one of said hollow posts, through said holes in a pair of said limbs of each of said figures, and through another of said hollow posts to a second point of relatively non-rotatable connection with said rotatable means, each strand of said double strand passing through its individual series of holes, each series including a hole in each said post and a hole in each limb of one of said pairs.

4,373,292
DUAL CHARACTER DOLL
Carme D. Pelura, Pennsville, N.J., assignor to Neat Nap, Inc., Pennsville, N.J.
Filed Apr. 24, 1981, Ser. No. 257,361
Int. Cl.³ A63H *3/12*
U.S. Cl. 46—153 **9 Claims**

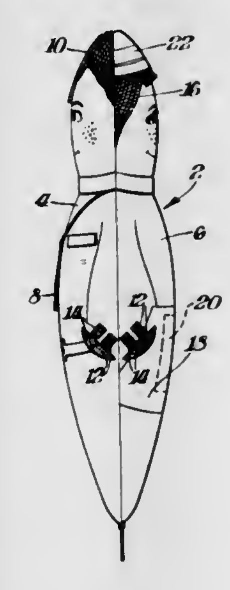

1. A dual character doll having front and back characters and having fastening means on both front and back characters for joining to a second, similar dual character doll at or near the hands thereof, wherein said fastening means comprise pads affixed near the hands thereof, said pads being of hook and loop type, at each fastening means location there being at least two pads, one such being of the hook type and one being of the loop type.

4,373,293
TOY RACING GAME
Katsumi Kakizaki, and Michihiro Kozuka, both of Tokyo, Japan, assignors to Tomy Kogyo Co., Inc., Tokyo, Japan
Filed Aug. 25, 1980, Ser. No. 180,866
Claims priority, application Japan, Oct. 23, 1979, 54-147243[U]
Int. Cl.³ A63H *18/00*
U.S. Cl. 46—206 **14 Claims**

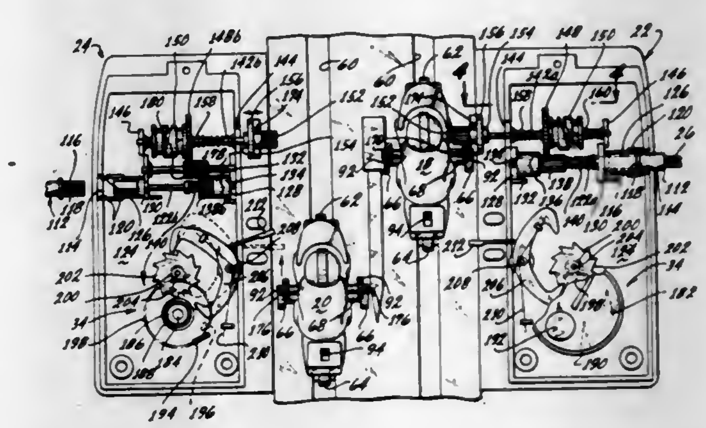

1. An improvement in a toy racing game incorporating a wind up spring motor powered vehicle which rides on a track which comprises:
said vehicle including a winding member operatively connected to said spring motor and capable of winding said spring motor if acted on by an external source;
a vehicular energizing station located in association with said track and capable of interacting with said vehicle winding member to wind the spring motor in said vehicle;
said vehicular energizing station including vehicle engagement means movably mounted in said station between a first position wherein said vehicle is free to pass by said station in said track without interacting with said station and a second position wherein said vehicle is engaged by said vehicle engagement means and is retained at said station;
said vehicle engagement means including a rotary motion transfer member, said rotary motion transfer member being capable of operatively engaging said winding member for winding said spring motor when said vehicle engagement means is in said second position;
rotary motion means capable of being operated by an operator of said game and producing a rotary output in response to said operation;
connecting means operatively connecting said rotary motion means to said rotary motion transfer member transferring said rotary output of said rotary motion means to said rotary motion transfer member to move said vehicle engagement means between said first and said second positions when said rotary motion transfer member is rotated and to supply rotary motion to said winding member when said vehicle is at said energizing station and said vehicle engagement means is in said second position.

4,373,294

DOOR FOR A MINE STOPPING HAVING KNIFE-EDGE HINGES

John M. Kennedy, and William R. Kennedy, both of P.O. Box 38, Taylorville, Ill. 62568

Filed Oct. 17, 1980, Ser. No. 198,203

Int. Cl.³ E05D *7/88*

U.S. Cl. 49—388 **3 Claims**

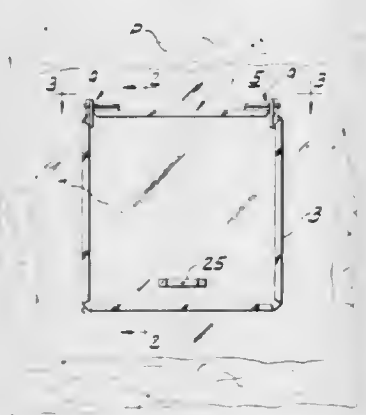

1. A door for closing a man-door opening in a mine stopping, said door being of metal and having a pair of knife-edge hinges, one at each of the two upper corners of the door for mounting the door to swing about a horizontal axis adjacent the top edge of the man-door opening between open and closed positions, each knife-edge hinge comprising a horizontally extending pivot pin and a vertically extending lug comprising a relatively thin metal plate member having a hole therein adapted to receive the pivot pin, whereby the area of engagement between the pivot pin and the lug is relatively small so that corrosion on the hinge at said area of engagement does not prevent opening of the door;

means for mounting said pivot pins at the top of the man-door opening;

said mounting means comprising a pair of brackets, each bracket having a generally vertical web, a generally horizontal lower flange extending away from the door, and a generally horizontal upper flange extending over the door, each pivot pin being welded to the upper flange of the respective bracket;

and a door frame being mounted in the man-door opening; said door frame having a top, bottom, and two side channel members each having first and second flanges and a web therebetween, the web of each channel member being adjacent an edge surface of the stopping at the opening therein, the first flange of each channel member extending alongside the face of the stopping toward the door, and the second flange of each channel member extending alongside the face of the stopping away from the door.

4,373,295

RESILIENT FRICTION SASH BALANCE

William R. Starck, Greenwich, Conn., assignor to A.M.S. Corporation, South Norwalk, Conn.

Filed Nov. 12, 1980, Ser. No. 211,327

Int. Cl.³ E05D *15/16*

U.S. Cl. 49—435 **2 Claims**

1. A unitary sash guide for slidingly embracing the juxtaposed side edges of a pair of double-hung inner and outer window sash units, and guiding their sliding opening and closing movement in a window opening, comprising

an arched portion spanning the side edge of the window opening and having a central channel-shaped parting bead protruding convexly into the window opening,

an inner terminal flange protruding from the inner part of the arched portion into the window opening,

an outer terminal flange protruding from the outer part of the arched portion into the window opening,

a slanting inner wing flange extending cantilever-fashion diagonally from an inner corner of the channel-shaped parting bead toward the arched portion and the inner terminal flange, forming therewith a channel-shaped groove embracing the side edge of the inner sash unit,

and a slanting outer wing flange extending cantilever-fashion diagonally from an outer corner of the channel-shaped parting bead toward the arched portion and the outer terminal flange, forming therewith a channel-shaped groove embracing the side edge of the outer sash unit,

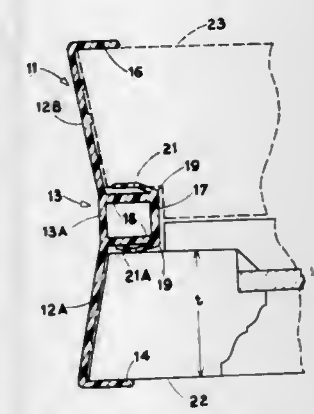

with each wing flange incorporating a substantially flat distal edge panel,

and with the entire sash guide being a unitary extrusion formed of plastic material,

whereby each of the two sash units is slidingly gripped in resilient tractive balancing engagement between a terminal flange and a facing slanting wing flange resiliently deformed by the embraced sash unit.

4,373,296

DEBURRING APPARATUS FOR WORKPIECES

Hisamine Kobayashi, Nagoya, Japan, assignor to Kabushiki Kaisha Shikishima-Tipton, Aichi, Japan

Division of Ser. No. 972,487, Dec. 22, 1978, Pat. No. 4,280,304. This application Jan. 10, 1980, Ser. No. 110,843

Claims priority, application Japan, Jan. 25, 1978, 53-7723

Int. Cl.³ B24B *29/00, 31/00, 51/00*

U.S. Cl. 51—3 **11 Claims**

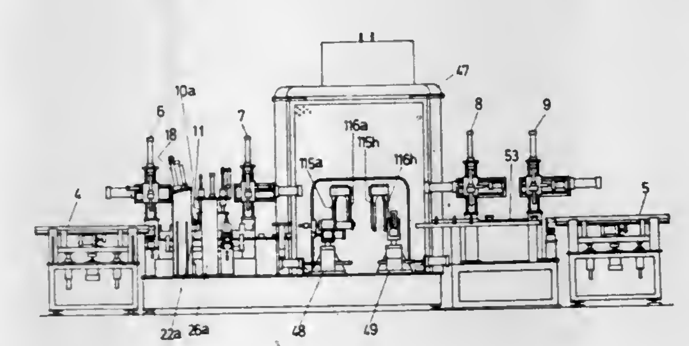

2. An apparatus for deburring and finishing workpieces, said apparatus comprising:

intermittently driven carrying means for forwarding workpieces successively at regular intervals and operable alternately to move distances or pitches equal to said regular intervals during movement periods of time and to be stationary during stationary periods of time;

at least one deburring apparatus positioned adjacent said carrying means and including portions on opposite sides of said carrying means, said deburring apparatus including rotating and reciprocating tool means for, during stationary periods of time, removing burrs from successive selected said workpieces, thereby to form semi-finished workpieces;

workpiece holding means for, during stationary periods of time, holding said selected workpieces in position on said carrying means during removal of said burrs;

gyro-finishing means, located downstream of said deburring apparatus with respect to the direction of movement of said carrying means, for subjecting successively said semi-finished workpieces to a finishing operation, thereby forming finished workpieces, said gyro-finishing means including a central vertical shaft, support plates fixed to said central vertical shaft, a rotatable finishing tub positioned below said central vertical shaft and containing an abrasive media, a plurality of finishing units supported by said support plates and spaced around said central vertical shaft, each said finishing unit including means for grasping a said semi-finished workpiece, means for lowering the thus grasped semi-finished workpiece into said abrasive media, and means for rotating said semi-finished workpiece in said abrasive media about a vertical axis of the respective said finishing unit, thereby to perform said finishing operation, and means for indexing said central vertical shaft, said support plates, said finishing units and the said grasped workpieces about the axis of said central vertical shaft;

semi-finished workpieces transferring means for, during stationary periods of time, transferring successively said semi-finished workpieces from said carrying means to said gyro-finishing means at an inlet position thereof; and

finished workpiece transferring means for, during stationary periods of time, discharging successively said finished workpieces from said gyro-finishing means at an outlet position thereof.

4,373,297

DEBURRING MACHINE

Donald W. Pennertz, and Ritchie J. Burkey, both of Alexandria, Minn., assignors to Alexandria Extrusion Company, Alexandria, Minn.

Filed Dec. 10, 1980, Ser. No. 215,122

Int. Cl.³ B24B *9/00;* A47L *15/00*

U.S. Cl. 51—84 R **4 Claims**

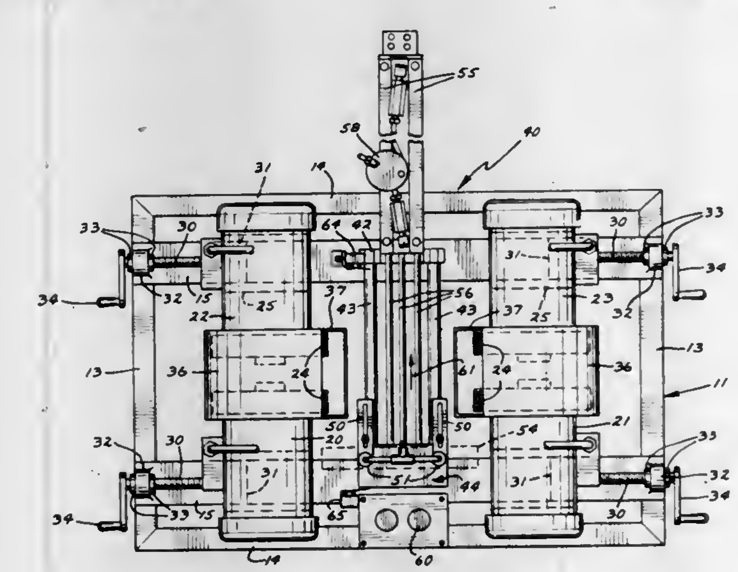

1. A deburring machine comprising:

a frame;

a pair of spaced parallel track members each having a longitudinal direction and being mounted on said frame;

a pair of motors on each track member mounted for selectable movement along the respective track member, each of said motors being spaced apart from the other motor on the respective track member, said motors each having an output shaft, and each motor output shaft having a separate abrading brush mounted thereon, the motors being oriented so that the output shaft of each motor on each track member is oriented facing toward a corresponding motor on the other track member and generally aligned therewith so that the brush of each motor on each track member is adjacent the brush of the corresponding motor on the other track member and located between the track members, the rotational planes of the brushes being between the track members;

a workpiece carrier;

means to slidably mount the carrier supported on and extending between and generally perpendicular to the track members, the means to slidably mount being positioned between the pair of motors on the respective track member;

a power cylinder mounted on the means to slidably mount and connected to the workpiece carrier to permit moving the workpiece carrier from a first home position on one side of the planes of all the brushes to a second retracted position on an opposite side of the planes of said brushes; and

clamp means on said workpiece carrier to clamp and support an elongated workpiece with opposite end portions of the workpiece extending outwardly from the workpiece carrier, said motors being adjusted to position whereby the brush on each of the motors will engage portions of a workpiece carried on the workpiece carrier to deburr such workpiece as the workpiece carrier is moved between its home and retracted positions.

4,373,298

AUTOMATIC EDGE BEVELLER FOR REMOVING THE SHARP PERIPHERAL EDGES OF OPHTHALMIC LENSES

Joseph Tusinski, and Phillip D. Hill, both of Muskogee, Okla., assignors to Coburn Optical Industries, Inc., Muskogee, Okla.

Filed Jan. 30, 1981, Ser. No. 229,911

Int. Cl.³ B24B *5/14*

U.S. Cl. 51—105 LG **6 Claims**

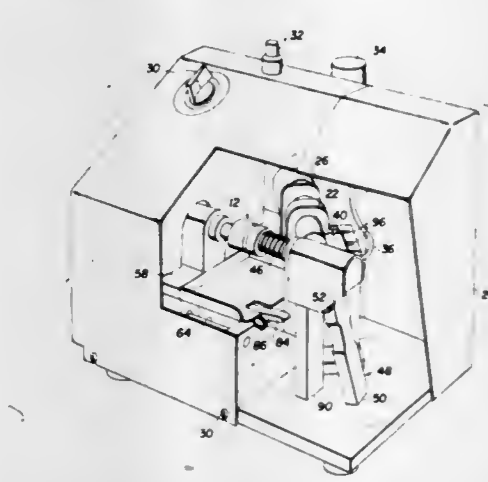

1. An edge beveller for removing the sharp peripheral edges of opthalmic lenses, said edge beveller comprising:

(a) a pair of clamps sized and shaped to grip the opthalmic lens therebetween such that the opthalmic lens is perpendicular to a first axis which extends through the opthalmic lens and the edge of the opthalmic lens projects radially outwardly from between said clamps;

(b) a first spring which biases a first one of said pair of clamps to resiliently grip the opthalmic lens therebetween;

(c) first means for rotating the opthalmic lens about the first axis;

(d) a grinding wheel mounted for rotation about a second axis set at an acute angle to the first axis;

(e) second means for rotating said grinding wheel about the second axis;

(f) a carriage on which said second one of said pair of clamps is mounted, said carriage being linearly movable in a direction parallel to said first axis;

(g) a second spring which biases said carriage towards said grinding wheel;

(h) third manually operable means actuation of which moves said first one of said pair of clamps against the bias supplied by said first spring;

(i) fourth manually operable means activation of which moves said second one of said pair of clamps against the bias supplied by said second spring; and

(j) fifth manually operable means for locking said second one of said pair of clamps away from said grinding wheel against the bias of said second spring.

4,373,299
TOOL FINISHING MACHINE HAVING IMPROVED SUPPORT TABLE
Harold W. Gaston, and Donald J. Glaser, both of Emporia, Kans., assignors to Glendo Corporation, Emporia, Kans.
Filed Feb. 13, 1981, Ser. No. 234,424
Int. Cl.³ B24B *7/02*
U.S. Cl. 51—122 **8 Claims**

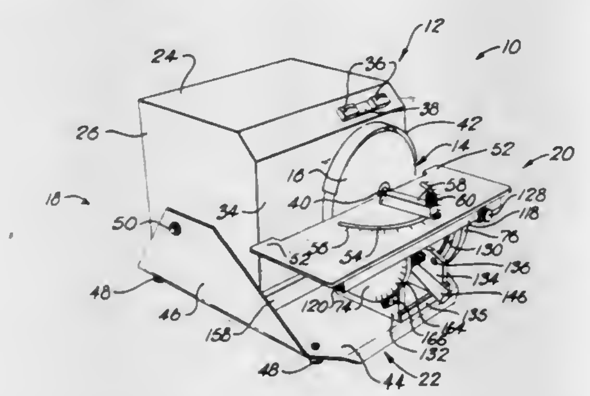

1. In a tool sharpening and finishing machine having a rotatable wheel provided with an abrasive, tool-engaging face and a tool-supporting table adjacent said face, structure supporting said table including:
an elongated element underlying said table;
means interconnecting the table and said element;
an elongated base underlying the element;
rollers on the base engaging the longitudinal edges of said element and supporting the latter for reciprocation along the base,
said base having a longitudinal slot extending inwardly from one end thereof in the direction of reciprocation of said element, presenting a pair of elongated sections,
there being a roller on each section respectively
stationary means underlying the base; and
means attaching the base to said stationary means and holding one of the sections against movement toward and away from the other section,
the roller on said other section having means yieldably biasing the latter toward said one section.

4,373,300
APPARATUS FOR COLLECTING PARTICLES PRODUCED DURING ABRADING OF PRECIOUS METALS
Lyle D. Partridge, 507 Mustang Rd., Heber Springs, Ark. 72543
Filed Sep. 2, 1980, Ser. No. 183,254
Int. Cl.³ B24B *55/00*
U.S. Cl. 51—270 **2 Claims**

1. In combination with apparatus for abrading a substance, a degradable collector for
capturing particles separated from said substance during said abrading thereof, and minimizing the number of particles which contact said collector and rebound therefrom onto the area surrounding said collector,
said collector comprising a thermally or chemically destructible container including a hollow base having adhesive means on the exterior sides thereof; a lid having one end pivotally connected to said base along one side thereof and depending flaps movable with said lid to a container closing position engaging said adhesive means; said base and lid each including a baffle member having a plurality of spaced elongate panel members, each of said elongate panel members having a pair of opposed planar surfaces co-terminating along an edge defining at least in part the periphery of said panel member, said elongate panel members being spaced such that
(a) at least one group of said elongate panel members are generally parallelably disposed with respect to one another,
(b) said edges thereof define a striated surface for receiving and capturing said particles produced during the abrading of said substance, and

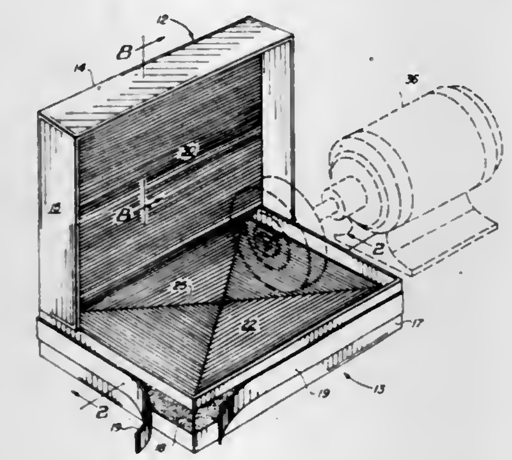

(c) each of said particles captured by said baffle members downwardly falls into a space between an adjacent pair of said elongate panel members,
(d) said baffle member of said lid and said base, each being disposed in spaced relation to the adjacent surface of its respective lid or base so as to define communicating chambers when said lid is in the open position.

4,373,301
CAM MACHINING
John D. Parnum, Netherton, and Nigel T. Barber, Rugby, both of England, assignors to The Newall Engineering Company Limited, Peterborough, England
Division of Ser. No. 926,384, Jul. 20, 1978, abandoned. This application Sep. 28, 1979, Ser. No. 79,700
Claims priority, application United Kingdom, Jul. 26, 1977, 31406/77
Int. Cl.³ B24B *1/00*
U.S. Cl. 51—281 C **9 Claims**

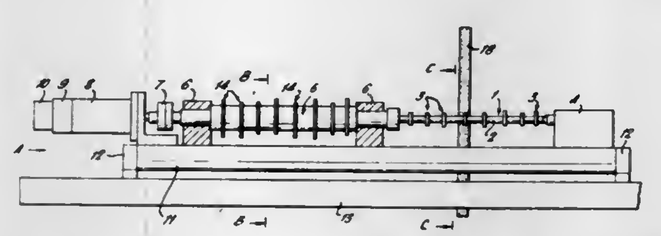

1. A method of machining a cam profile on a workpiece comprising the steps of rotating the workpiece adjacent to a machine tool, producing movement of the workpiece relative to the machine tool in a lateral direction with respect to the axis of rotation of the workpiece so that the machine tool removes stock from the workpiece to form a predetermined cam profile thereon, continuously monitoring the angular displacement of the workpiece relative to a datum during formation of said cam profile, pre-programming a memory with a speed programme relating different rotational speeds of the workpiece for a substantially constant stock removal rate to a number of individual angular displacements of the workpiece from said datum, pre-programming a memory with acceleration data relating to the changes of speed required by said speed programme at the different angular positions of the workpiece and, once machining of the workpiece has commenced, continuously measuring the angular displacement of the workpiece from said datum and, at the selected angular displacements at which a change of rotational speed is dictated by said speed programme, adjusting the speed of rotation of the workpiece to the speed determined by the speed programme and at an acceleration determined by the acceleration programme and maintaining the workpiece at the new speed until the new angular displacement from said datum dictates the next change in rotational speed of the workpiece, and repeating this process until the predetermined cam profile is formed on the workpiece.

4,373,302
SHARPENING APPARATUS FOR CIRCULAR BLADES
Emory C. Darby, P.O. Box 853, Covington, Ga. 30209
Filed Nov. 17, 1980, Ser. No. 207,338
Int. Cl.³ B24B *3/36*
U.S. Cl. 51—131.1 **1 Claim**

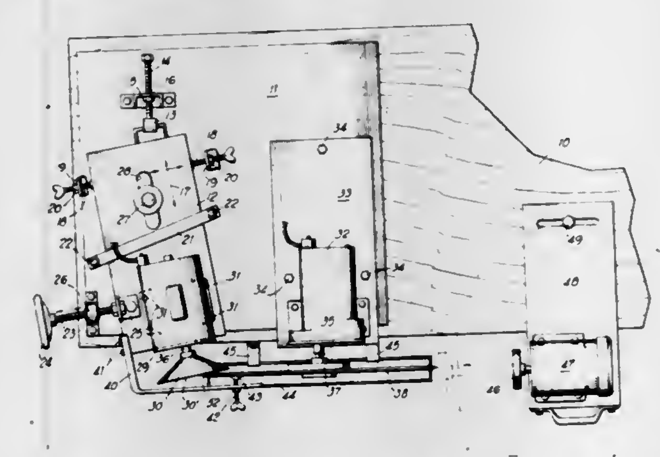

1. A self-contained sharpening apparatus for sharpening thin circular blades of large diameter and being bodily mountable on a work bench, the apparatus comprising a flat base plate mountable on a support surface of a work bench, a gear motor including a mounting plate secured to said base plate near one side thereof and having a driven shaft turning at a comparatively low speed of rotation and projecting beyond one edge of the base plate, means carried by the driven shaft to releasably secure a large diameter thin circular blade thereto for rotation with the shaft for sharpening, a comparatively high speed drive motor having a mounting base forming a slide, the drive motor having a driven shaft and a cone grinding wheel secured to such shaft for comparatively high speed rotation therewith and having a frontal grinding face, screw-threaded adjusting means on the base plate and engaging the slide to move the slide laterally, longitudinally and angularly with respect to the rotational axis of the grinding wheel, whereby the frontal grinding face of such wheel can be precisely adjusted to a required acute angle to the plane of rotation of the circular blade, the frontal grinding face extending across the peripheral edge of the circular blade on the side of the blade nearest to the gear and drive motors and exerting pressure on the blade edge sufficient to produce grinding and sharpening of the blade edge, means on said base plate and engaging the slide to lock the slide fixedly in a selected adjusted position, an arm fixed to the slide near one forward corner thereof and spaced from one side of the drive motor and grinding wheel, the arm extending forwardly of the grinding wheel and circular blade and having a lateral extension across and spaced from the frontal grinding face of the wheel and the forward face of the circular blade, an adjustable and lockable screw-threaded circular blade stabilizing shoe carried by the lateral extension of the arm substantially at right angles to the rotational plane of the blade, and said shoe slidably engaging the forward face of the blade near and radially inwardly of the peripheral edge of the blade in opposing relationship to the forward grinding face of the grinding wheel.

4,373,303
IN-GROUND TRAILER POST ASSEMBLY
Joseph Stratichuk, 4226 Batchelor Ave., Winnipeg, Manitoba, Canada
Filed Jun. 30, 1980, Ser. No. 164,885
Int. Cl.³ E04H *12/22, 12/00;* B60R *27/00*
U.S. Cl. 52—40 **5 Claims**

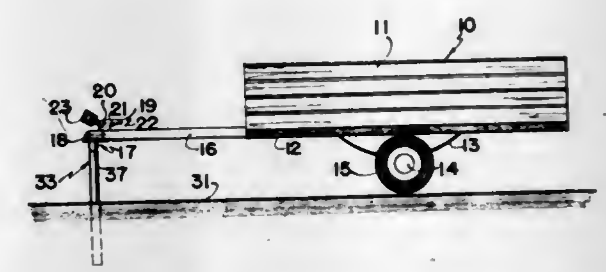

1. An in-ground trailer hitch post assembly for travel trailers, utility trailers and the like which include a hitch frame extending therefrom with a hitch ball receiving cup assembly on the front end thereof; comprising in combination a ground engaging portion and a post portion detachably engaging the upper end of said ground engaging portion, said ground engaging portion including a screw threaded tubular coupling portion on the upper end of said ground engaging portion situated substantially flush with the ground surface when installed therein, said post portion including a hitch means secured to the upper end thereof detachably engageable with the ball receiving cup of the associated trailer, and a screw threaded lower end screw threadably engaging within said screw threaded tubular coupling portion, said ground engaging portion comprising an elongated member situated vertically within the ground when installed, said screw threaded tubular coupling portion being screw threadably engageable upon the upper end of said elongated member and terminating substantially flush with the ground surface.

4,373,304
PREFABRICATED BUILDING UNITS
Ronald W. Howitt, 19 Holland Ct., Moana Park, Queensland, Australia (4217)
Filed Sep. 16, 1980, Ser. No. 187,798
Claims priority, application Australia, Mar. 18, 1980, PE2790
Int. Cl.³ E04B *7/16;* E04C *1/30*
U.S. Cl. 52—73 **4 Claims**

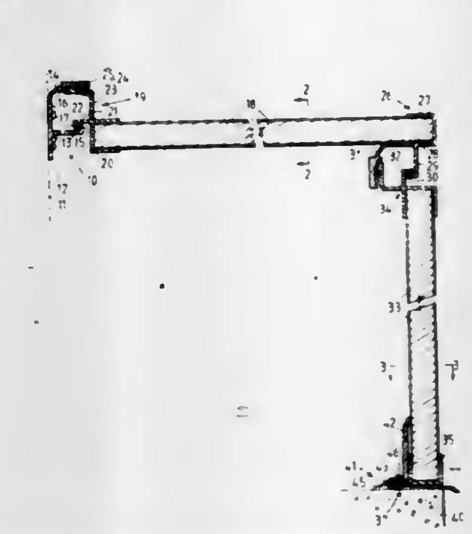

1. Prefabricated building units including:
a mounting rail,
means for supporting the mounting rail substantially horizontally at roof height,
a plurality of substantially rectangular roofing panels,
an engagement piece across the head of each roofing panel capable, when the roof panel is at an angle to horizontal

greater than the pitch of the roof to be installed, of being releasably engaged pivotally with the mounting rail, and

sealing means which, when the roofing panel is raised pivotally to the said pitch, automatically effects a seal between the mounting rail and the engagement piece;

wherein:

the mounting rail and the engagement piece are formed with hooked members releasably inter-engageable pivotally,

the mounting rail includes a flange with an underside curved in cross-section,

the attachment piece includes a flange with a normally upper surface so curved in cross-section that when the roof panel is raised pivotally to the said pitch it moves closely under the curved underside of the mounting rail flange, and

the sealing means includes a sealing strip which, when the roof panel is raised pivotally to the said pitch, is brought between the curved surfaces of the mounting rail flange and the attachment piece flange.

4,373,305
ARCH FORMING STRUCTURE
Leslie T. Russell, Halifax, Canada, assignor to Canadian Patents & Development Limited, Ottawa, Canada
Filed Feb. 6, 1981, Ser. No. 232,371
Claims priority, application Canada, Apr. 10, 1980, 352073
Int. Cl.³ E04B *1/32;* E04C *3/46*
U.S. Cl. 52—86 **4 Claims**

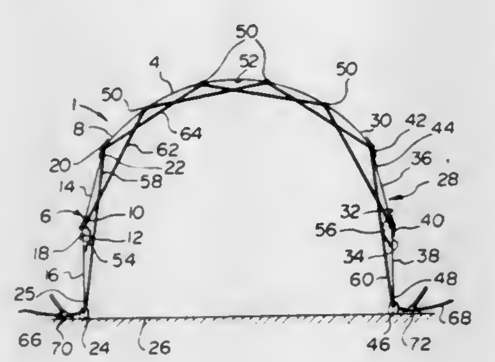

1. An arch forming structure, comprising:

(a) a flexible member, substantially flat in the collapsed condition and for bending therefrom to form, in the erected condition, the arched portion of the structure,

(b) a first pair of hinged strut members at a first end of the flexible member with two adjacent ends of the strut members thereof hinged together and the strut members when folded together at the hinge, in the collapsed condition, extending beneath the flexible member from the first end thereof towards the hinge, the hinge allowing limited pivotal movement between the strut members for them to be unfolded and then restrained against further pivotal movement at the erected position through dead center,

(c) a first connecting hinge pivotally connecting a free end of the first pair of hinged strut members to the first end of the flexible member,

(d) a first base hinge for pivotally attaching the other free end of the first pair of hinged strut members to a base,

(e) a second pair of hinged strut members at a second end of the flexible member, with two adjacent ends of the strut members hinged together and the strut members when folded together at the hinge, in the collapsed conditions extending beneath the flexible member from the second end thereof towards the hinge, the hinge allowing limited pivotal movement between the strut members for them to be unfolded and then restrained against further pivotal movement at an erected position through dead center,

(f) a second connecting hinge pivotally connecting a free end of the second pair of hinged strut members to the second end of the flexible member,

(g) a second base hinge for pivotally attaching the other free end of the second pair of hinged strut members to a base,

(h) a plurality of tension line guides attached to the flexible member at spaced intervals to a side of the flexible member which will define the inside of the arch so that the tension line guides will be spaced therearound,

(i) a first tension line deflecting guide attached to the first pair of hinged strut members at a position adjacent the hinge thereof and beneath the strut members thereof when they are folded together in the collapsed condition,

(j) a second tension line deflecting guide attached to the second pair of hinged strut members at a position adjacent the hinge thereof and beneath the strut members thereof when they are folded together in the collapsed condition,

(k) a first tension line length secured by one end to a portion of the first pair of hinged strut members in the region of the first base hinge and extending along the struts of the first pair of hinged strut members and deflected therefrom by the first tension line deflecting member, with the other end of the first tension line length secured to a portion of the first pair of hinged strut members in the region of the first connecting hinge,

(l) a second tension line length secured by one end to a portion of the second pair of hinged strut members in the region of the second base hinge and extending along the strut members of the second pair of hinged strut members and deflected therefrom by the second tension line deflecting member, with the other end of the second tension line length secured to a portion of the second pair of hinged strut members in the region of the second connecting hinge,

(m) a third tension line length fastened by one end to the first pair of hinged strut members in the region of the hinge thereof and threaded through odd number tension line guides only, counted from the first pair of hinged strut members, and

I. when an even number of tension line guides are provided, secured at the other end to the second pair of strut members in the region of the second connecting hinge,

II. when an odd number of tension line guides are provided, secured at the other end to a portion of the second pair of strut members in the region of the hinge thereof,

and

(n) a fourth tension line length fastened by one end to the first pair of strut members in the region of the first connecting hinge and threaded through even number tension line guides only, counted from the first pair of hinged strut members, and

III. when an even number of tension line guides are provided, secured at the other end to the second pair of strut members in the region of the hinge thereof,

IV. when an odd number of tension line guides are provided, secured at the other end to the second pair of strut members in the region of the second connecting hinge,

whereby,

(o) tensioning of the first and second tension line lengths with movement of the first and second pairs of hinged struts from the collapsed condition through dead center to the erected condition will cause the third and fourth tension line lengths to bend the flexible member and form the arched portion of the structure.

4,373,306
COUPLING FORMATION FOR THE INTERFITTING OF STRUCTURAL ELEMENTS
Jacques Recb, Le Chesnay, France, assignor to Allibert Exploitation, Grenoble, France
Filed Feb. 5, 1980, Ser. No. 127,310
Int. Cl.³ E01C *5/20*
U.S. Cl. 52—98 **6 Claims**

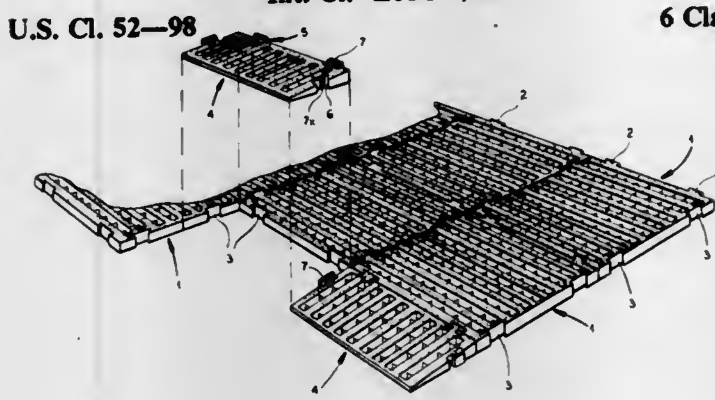

1. In an assembly of structural elements detachably interconnected by means of interfitting complementary coupling formations, said elements including related edges and spaced faces,

the improvement wherein hybrid-type coupling formations on said angularly related edges of at least one of said elements each comprise an undercut recess flanked by overhanging surface portions and a generally T-shaped projection rising from said recess, said projection having a stem frangibly secured to the bottom of said recess and a head spacedly overlying said overhanging surface portions with a profile substantially complementary to the inverted profile of said recess, the latter being exposed at said faces and laterally accessible from said faces for engagement with positive fit by a tenon of like inverted profile on another of said elements upon break-off of said stem at the bottom of said recess.

4,373,307
ADJUSTABLE EARTHQUAKE BACKSTOP SUPPORT FOR MOBILE HOMES
George Q. Evans, Paramount, Calif., assignor to Earthquake Preparedness Co., Inc., Paramount, Calif.
Filed Apr. 6, 1981, Ser. No. 251,503
Int. Cl.³ E04D *15/00*
U.S. Cl. 52—167 **6 Claims**

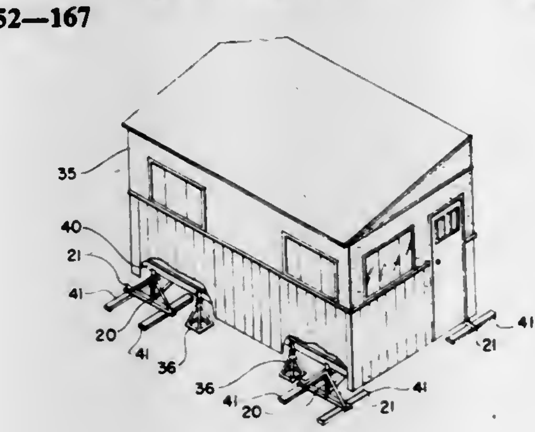

1. A backstop support for a mobile home having an underframe; said support comprising a cross-beam, adjustable means for supporting said cross-beam in a position underlying but spaced from said underframe, and means for preventing relative displacement of said cross-beam and underframe longitudinally of said cross-beam when said cross-beam is supported in said position.

4,373,308
HOUSING STRUCTURE UTILIZING SOLAR ENERGY
Ralph E. Whittaker, Danville, Calif., assignor to Atlantic Richfield Company, Los Angeles, Calif.
Filed Apr. 24, 1981, Ser. No. 257,298
Int. Cl.³ H01L *31/04;* F24J *3/02*
U.S. Cl. 52—173 R **7 Claims**

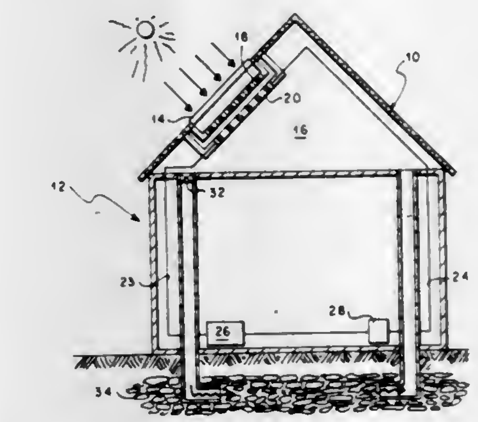

1. In a solar energy-utilizing building including: a roof and exterior walls, the improvement comprising:

a. a translucent member covering an opening in said roof,

b. elongated solar cell means supported within said walls, beneath said roof in spaced relation to said translucent member so as to absorb solar energy passing therethrough, said solar cell means being rotatable about its longitudinal axis, and

c. a flat plate thermal solar collector fixedly supported in spaced relation to said solar cell means so as to absorb heat energy passing through said translucent member.

4,373,309
SUPPORTING BOLT
Gerhard Lutz, Reutlingen, Fed. Rep. of Germany, assignor to Gelu Reutlinger Steinwerk Gerhard Lutz GmbH, Reutlingen, Fed. Rep. of Germany
Filed Sep. 11, 1978, Ser. No. 941,407
Int. Cl.³ E04F *11/00;* F16B *37/00*
U.S. Cl. 52—182 **9 Claims**

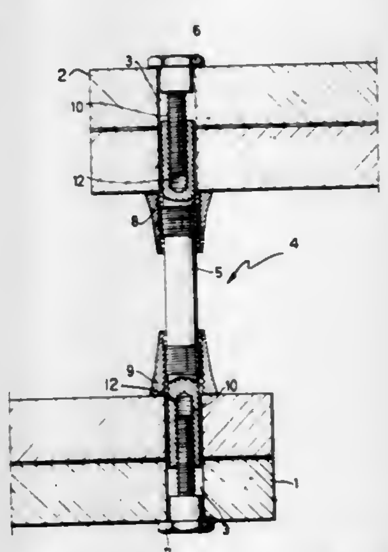

1. A supporting bolt assembly for connecting prefabricated steps together into a stairway, said supporting bolt assembly readily permitting the steps in said stairway to be adjusted, partially disassembled and completely disassembled with respect to each other, said supporting bolt assembly comprising a one-piece, long-shanked middle bolt formed with an axial threaded bore in each of its end portions, each said step being formed with a plurality of through bores of a size and configuration to snuggly receive an end portion of said middle bolt, said supporting bolt assembly further comprising a pair of end pieces each comprising a head portion and a threaded shank,

said end piece head portion having a size and configuration large enough to prevent it from passing through said step through bore, said end piece threaded shank mating with said axial threaded bore in said middle bolt end portion, said middle bolt being formed with a pair of externally threaded sections each located in predetermined spaced relation to a respective end portion of said middle bolt, said supporting bolt assembly further comprising a pair of retainers having threaded bores to mate with said middle bolt externally threaded sections respectively; whereby a stairway can be readily constructed, adjusted, and partially or totally disassembled using a plurality of said prefabricated steps and a plurality of said supporting bolt assemblies by mounting each step at it's through bore at an end portion of a middle bolt of a supporting bolt assembly between a head portion of an end piece and the adjacent retainer on said middle bolt of said supporting bolt assembly.

4,373,310
STAIRCASE HANDRAIL CONSTRUCTION
Robert Dean, 406 S. Shiawassee, Owosso, Mich. 48867
Filed Apr. 14, 1980, Ser. No. 140,315
Int. Cl.³ E04F *11/00*
U.S. Cl. 52—182 **6 Claims**

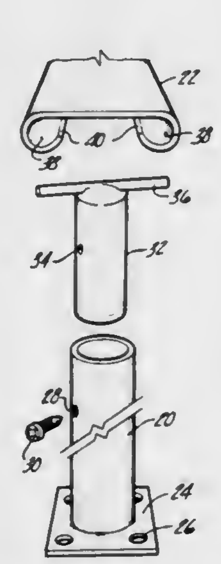

1. A handrail assembly for use with a staircase having treads, said assembly comprising:
a continuous rail having a top and a pair of return bent and downwardly depending flanges, said flanges forming a pair of facing channels between the side walls along the length of said rail, each flange having a free edge positioned underneath the top, said free edges being spaced apart from each other and forming a slot therebetween;
a tee member having a lower portion and an upper pin secured transversely across the upper end of the lower portion, said pin insertable into said pair of channels through said slot, said pin having a length substantially the same as the spacing between the side walls so that, with said pin positioned transversely across said rail and within said channels, the ends of the pin frictionally engage said side walls,
an elongated post having one end secured to and extending upwardly from at least one of said treads; and
means for fixedly securing the lower portion of said tee member to the other end of said post.

4,373,311
INTEGRAL HOUSING BODY
Wolfgang Artweger, Windischgarsten, Austria, assignor to Hutter & Schranz Bautechnik Gesellschaft m.b.H., Klagenfurt, Austria
Filed May 2, 1980, Ser. No. 145,888
Claims priority, application Austria, Jun. 28, 1980, 4502/79
Int. Cl.³ E04C *2/24*
U.S. Cl. 52—282 **5 Claims**

1. A housing body comprising a plurality of composite wall elements, each wall element consisting of an outer carrier plate, an inner carrier plate and a rigid synthetic resin foam support member sandwiched therebetween, the support members of adjoining one of the wall elements having end faces spaced from each other and forming a corner between the adjoining wall elements, the outer carrier plate being shaped to form the corner and spanning the space between the end faces of the support members of the adjoining wall elements whereby the outer carrier plate is common to the adjoining wall elements and the support member end faces define the space with the outer carrier plate, a load-bearing rigid synthetic resin foam core in the space and rigidly and directly bonded to the outer carrier plate and to the end faces of the support members of the adjoining wall elements in a force-transmitting manner, adjacent ones of the wall elements extending substantially perpendicularly to each other, alternating ones of the wall elements being substantially parallel to each other, all the wall elements and interconnecting foam cores

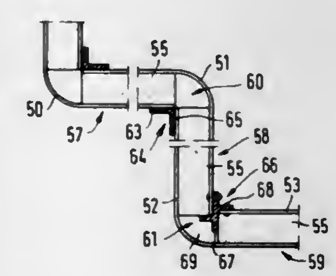

forming an integral structure, and alternating ones of the foam cores being connected to alternating ones of the carrier plates, and studs at the corners, the studs interconnecting abutting ones of the inner carrier plates and the studs being shaped elements having a first abutment part, a portion of the first abutment part being adjacent one of the abutting plates and being connected thereto and another portion thereof extending into the space at the corner and being adjacent the face of the support member of one of the adjoining wall elements, the other abutment part portion being connected to the support member face, and two additional abutment parts extending substantially perpendicularly from the first abutment part, one of the additional abutment parts being adjacent the other abutting plate and being connected thereto and the other additional abutment part extending into the space at the corner and being adjacent the face of the support member of the other adjoining wall element, the other additional abutment part being connected to the adjacent support member face.

4,373,312
PREFABRICATED PANEL CONSTRUCTION SYSTEM
Kwon S. Kim, Oklahoma City, Okla., assignor to Star Manufacturing Co., Oklahoma City, Okla.
Continuation of Ser. No. 893,435, Apr. 4, 1978. This application Sep. 9, 1980, Ser. No. 185,548
Int. Cl.³ E04C *1/10*
U.S. Cl. 52—309.9 **2 Claims**

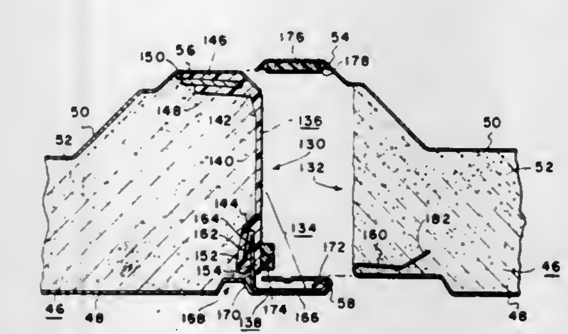

1. A prefabricated panel for use with like panels in constructing a roof of a building, comprising:
a body of insulating material having opposite upper and lower major faces, first and second opposite sides and first and second opposite ends;

upper and lower corrugated metal sheets disposed on upper and lower major faces of the insulating body, the upper and lower sheets each having a flap extending beyond the insulating body at the first and second opposite ends of the insulating body, respectively, to form respective leading and trailing ends of the panel;
the lower metal sheet having first and second folded edges extending along respective first and second opposite sides of the panel, without extending beyond the end of the insulating body at said first and second ends thereof, whereby the second end of an adjacent panel of similar construction may be mounted on the leading end flap of the upper sheet without interference from the folded edges to facilitate end-to-end assembly of roof panels; and
the first folded edge extending outwardly from the first side of the insulating body to form a leading edge of the panel and the second folded edge being embedded within the insulating body adjacent to the second side thereof to form a trailing edge of the panel for placing similar roof panels in side-by-side abutting relationship.

4,373,313
WATER-TIGHT RIGID STRUCTURAL PANEL
Edgar M. Nash, Jr., 32814 Maverick Dr., Porterville, Calif. 92357
Filed Jul. 22, 1980, Ser. No. 171,103
Int. Cl.³ E04C *2/32*
U.S. Cl. 52—397 **11 Claims**

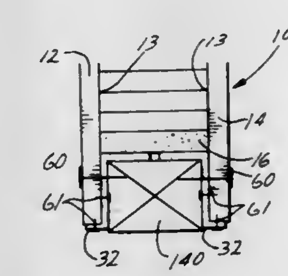

1. A load bearing wall comprising:
a framework including top and bottom horizontal members joined by spaced vertical members, and wall panels extending between the horizontal and vertical members, each wall panel including a pair of solid rectangular panel sheets spaced apart by a distance slightly greater than the thickness of the framework members, the sheets overlapping the framework members, core means located between and bonded to the adjacent surfaces of the panel sheets to secure the sheets together, a boundary sealing strip of compressible material having a normal thickness greater than the spacing between the panel sheets maintained by the core means, the boundary strip being compressed between and bonded to the panel sheets and extending around the perimeter of the panel sheets but offset from the edges of the panel sheets to provide space for the frame members to fit between the panel sheets, and a plurality of clips positioned at spaced intervals around the perimeter of the respective panel sheets, each clip having two parallel portions joined by a connecting portion, one parallel portion of each clip engaging the edge of a panel sheet, the other parallel portion lying against the boundary strip, and the connecting portion engaging the inner surface of the panel sheet, said other parallel portion of the clips engaging a frame member to transfer any load extending parallel to the panel surface between the panel and the framework.

4,373,314
MASONRY VENEER WALL ANCHOR
Jack A. Allan, Palos Hills, Ill., assignor to AA Wire Products Company, Chicago, Ill.
Filed Dec. 10, 1981, Ser. No. 329,243
Int. Cl.³ E04B *1/41*
U.S. Cl. 52—434 **9 Claims**

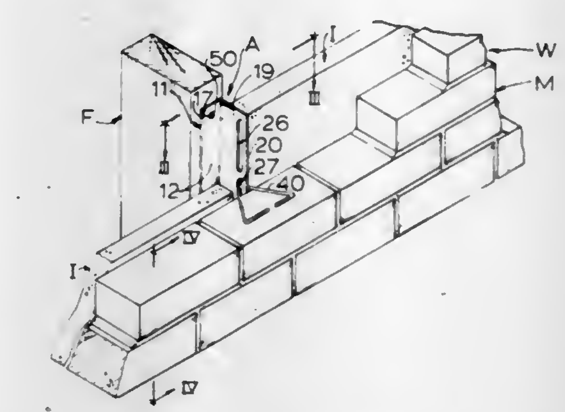

1. For use in a masonry wall veneer tie construction, a unitary wall anchor comprising,
first and second integrated rectangularly shaped leg components or coextensive length,
each having ends spaced apart from one another in the direction of a vertical axis and
each having a first longitudinal edge which is common to both thereby to form a corner joint, and
each having a second longitudinal edge which is spaced from said first edge and disposed in respective offset planes intersecting at said corner joint,
said first leg component having means for fastening said anchor with said first leg component in overlying relation to an adjoining architectural member,
said second leg component having elongated slot means formed therein inwardly of its edges and bounded longitudinally by ends and bounded laterally by inner and outer sides extending in parallelism to said vertical axis,
said slot means being sized to receive a tie means inserted therein in vertical sliding adjustment,
the respective inner and outer sides of said slot means being engageable with the tie means for transmitting both pulling and pushing forces to the adjoining architectural member over the entire area of said overlying first leg component.

4,373,315
BUILDING ELEMENTS AND BUILDING METHODS
Herbert H. Farrant, Massey, New Zealand, assignor to John Kenneth Burrowes, Auckland, New Zealand
Filed Mar. 13, 1980, Ser. No. 130,170
Claims priority, application New Zealand, Mar. 14, 1979, 189900
Int. Cl.³ E04D *1/00*
U.S. Cl. 52—522 **1 Claim**

1. A building structure comprising: two or more sheet building elements, each of said elements including a sheet of substantially rigid material having complementary interlocking means at or adjacent a pair of lateral edges thereof, a first of said interlocking means consisting of a substantially rectangular open topped trough having a flat base, and a second of said interlocking means consisting of an inverted substantially rectangular trough having a flat top and an open base, and clip means formed in said complementary means, whereby adjacent sheet building elements are conjoined by overlapping their adjacent edges so that a first and a second interlocking means are combined to form a substantially weather tight hollow substantially rectangular box section member to which linings or strappings can be attached by fasteners without damaging the weather tightness or integrity of the profile; and timber

elements provided within said hollow substantially rectangular box section to pass through either of said sheet building ele-

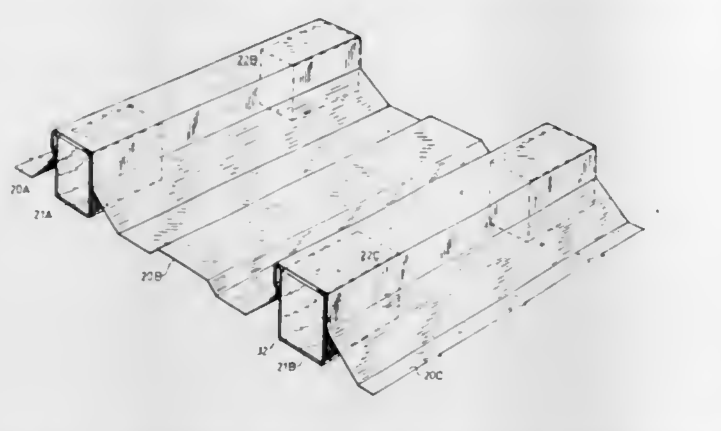

ments into said timber elements for connection with a supporting framework.

4,373,316

PLUG DRIVING APPARATUS

Takanobu Kobayashi, Katano, Japan, assignor to Hitachi Shipbuilding & Engineering Company Limited, Osaka, Japan

Filed Sep. 5, 1980, Ser. No. 184,530

Int. Cl.³ B67B *1/04;* **B65B** *7/28*

U.S. Cl. 53—67 **13 Claims**

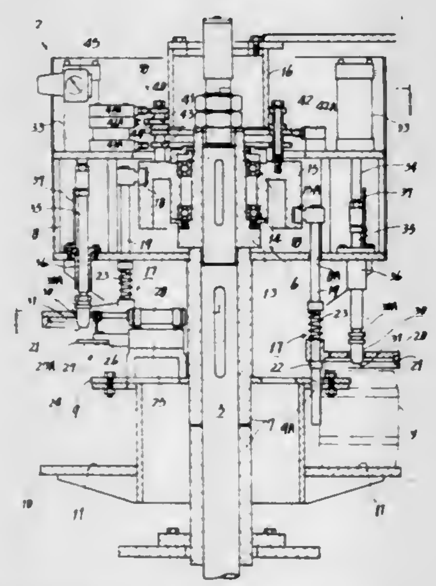

1. A plug driving apparatus comprising:
a vertical shaft;
an annular rotary receiver stand mounted on said shaft and having a plurality of container placing portions in a circular arrangement;
a plurality of plug driver heads each disposed above one of the container placing portions and having an end portion for retaining a plug, each driver head being vertically movable by first cylinder means between an upper stand-by position, an intermediate plug receiving position and a lower plug driving position;
plug pick-up means provided at each container placing portion, each plug pick-up means being linearly extendable and retractable by second cylinder means to and from a position right beneath a corresponding driver head;
fixed plug feeder means for successively feeding plugs to said plug pick-up means;
container positioning means provided at each container placing portion and comprising a downwardly and upwardly movable centering head having at the outer periphery thereof a holding portion adapted to fit, from above, around the outer periphery of the top portion of a container, the centering head having a hole in the central portion thereof for allowing the passage therethrough of a corresponding driver head; and
cam means disposed around the vertical shaft, said cam means comprising a first cam track for controlling the vertical movement of each driver head by the first cylinder means, a second cam track for switching the working pressure of the first cylinder means between low pressure operation to the intermediate plug receiving portion and high pressure operation to the lower plug driving position, a third cam track for extending and retracting the individual plug pick-up means by the second cylinder means, and a fourth cam track for vertically moving the centering heads of the positioning means.

4,373,317

CONTAINER WITH LID

Alwin Egli, Beringen, Switzerland, assignor to Platmanufaktur AB, Malmo, Sweden

Division of Ser. No. 970,339, Dec. 18, 1978. This application Jun. 2, 1980, Ser. No. 155,403

Claims priority, application Sweden, Jan. 2, 1978, 7800006

Int. Cl.³ B65B *61/18, 7/28*

U.S. Cl. 53—412 **14 Claims**

1. A method of forming an openable closure for a container comprising folding a blank of material to form an inner lid element having a flat bottom and a frame along at least two sides of said bottom, placing said inner lid element into an open end of a filled container with the bottom of the inner lid element facing into the container and the frame releasably bearing against the inner surfaces of the side walls of the container, joining a blank of material for an outer lid element with the frame of the inner lid element and joining the outer lid element to the container with a separable connection to enable separation of the outer lid element from the container together with removal of the entire inner lid element from the container to provide access to the interior of the container.

4,373,318

STACKING DEVICE FOR HOLLOW RIVETS

John Powderley, Birmingham, and David J. Brookes, Sutton Coldfield, both of England, assignors to USM Corporation, Farmington, Conn.

Filed Jun. 26, 1980, Ser. No. 163,216

Int. Cl.³ B65B *35/50, 27/06, 13/08*

U.S. Cl. 53—540 **11 Claims**

1. A stacking device suitable for use in stacking headed tubular fasteners in a column one-above-the-other head to tail, the device comprising feeding means including a substantially horizontal guide to which the fasteners are advanced one after the other with their shanks substantially vertical, a collector which defines a substantially vertical passage which has its upper end adjacent an open exit end of the guide so that fasteners leaving the guide through the exit end fall into the passage, the passage having transverse dimensions such that fasteners falling into the passage are constrained to form a column one-above-the-other with their shanks substantially in alignment, and air blowing means including a nozzle positioned adjacent the guide so that, when air is blown through the nozzle, the fastener nearest the exit end of the guide is caused to accelerate relative to the other fasteners in the guide and is thereby separated from said other fasteners to fall into the passage, means associated with the vertical passage of said collector, for packaging a column of stacked fasteners, said packaging means

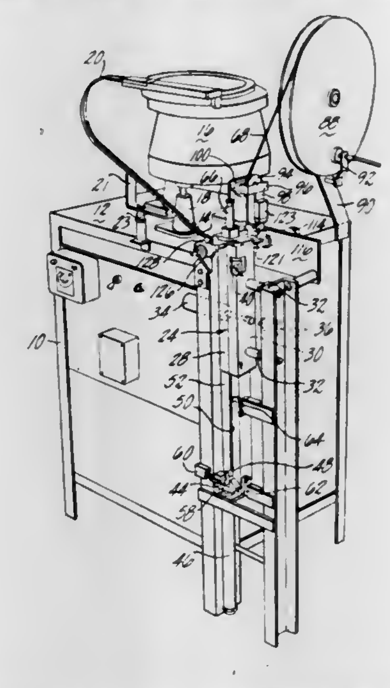

comprising means for moving a mandrel upwardly, longitudinally through a column of fasteners formed in the passage.

4,373,319

RECORD BAGGING

Geoffrey J. Pullen, Hayes; John A. Pemberton, New Denham, and Colin J. Brown, London, all of England, assignors to EMI Limited, Hayes, England

Filed Aug. 8, 1980, Ser. No. 176,592

Claims priority, application United Kingdom, Aug. 18, 1979, 7928834

Int. Cl.³ B65B *5/04, 43/14, 43/44, 43/54*

U.S. Cl. 53—573 **5 Claims**

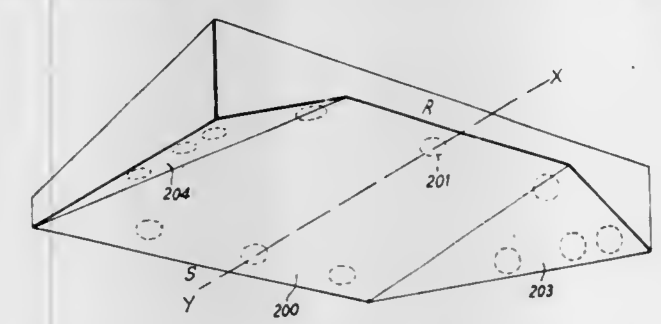

1. An apparatus suitable for use in a record transfer press for holding a record bag in a substantially horizontal position suitable for insertion therein of a disc record transferred thereto by a record transfer means, said apparatus comprising a plate means adapted to hold a bag so that the lower side thereof is everywhere unsupported and is spaced apart from the upper side, wherein the lower surface of the plate means has suction means, said plate means defining an axially extending channel having a first record receiving end and a second opposite end and having a progressively varying depth from said first end to said second opposite end, the shaping being such that when the upper side of a bag is caused by the suction means to conform to the lower said surface the shortest distance between the opposed closed edges of the bag is greater than the diameter of the disc record to be inserted therein, the other, closed edge of the bag being accommodated at or close to said second opposite end.

4,373,320

PACKING LINE FOR PACKING STACKS OF RECTANGULAR TINPLATE SHEETS ON PALLETS

Jan Olivierse, Velsen-Noord, and Machiel A. H. van Es, Beverwijk, both of Netherlands, assignors to Hoogovens IJmuiden B.V., IJmuiden, Netherlands

Continuation of Ser. No. 48,818, Jun. 15, 1979, abandoned. This application Apr. 24, 1981, Ser. No. 257,181

Claims priority, application Netherlands, Jun. 21, 1978, 7806682

Int. Cl.³ B65B *13/04*

U.S. Cl. 53—589 **5 Claims**

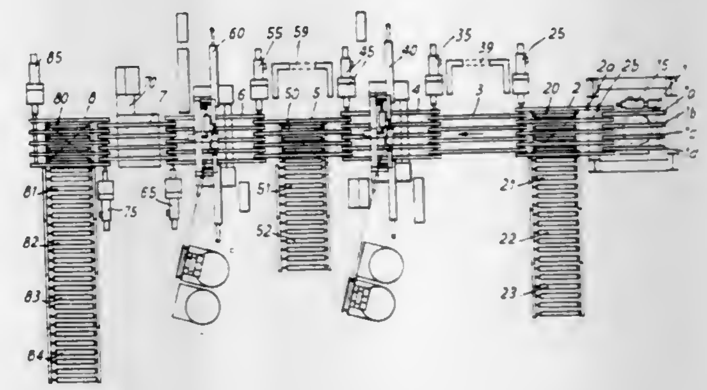

1. Packing line for packing stacks of rectangular tinplate sheets on pallets having bottom parallel runners, comprising
(a) a continuous conveyor path for said palletized stacks comprised of a path of a plurality of chain conveyors arranged end-to-end but with the ends of each chain conveyor overlapping the ends of its adjacent chain conveyor and at least one roller conveyor, each said chain conveyor over at least a portion of said chain conveyor path having at least three parallel endless spaced chains each with upper and lower runs moving parallel to the travel direction of the stack, the upper run providing a support surface for the palletized stacks with the pallet runners extending transversely to said chain conveyors path,
(b) a first one of said chain conveyors being a collector station at which successively said palletized stacks are formed on the pallets, the said first conveyor being vertically movable and rotatable about a vertical axis through at least 90° so as to be capable of turning a stack through 90°, the end of said first chain conveyor being independent of the end of the adjacent overlapping chain conveyor,
(c) a first manual workstation in said conveyor path at which manual packing operations are performed on the stacks,
(d) a second one of said chain conveyors being located before said manual workstation and after said first chain conveyor in the direction of travel of the stack,
(e) a third one of said chain conveyors located at said manual workstation,
(f) a fourth one of said chain conveyors,
(g) a strapping machine adapted automatically to apply straps transversely of the conveyor path around a palletized stack partially packed at said manual workstation, said strapping machine being located adjacent said fourth one of said chain conveyors, in the direction of travel of the palletized stacks, and
(h) a branch roller conveyor which is liftable to move one of its rollers between each two adjacent parallel chains and above the upper runs to enable palletized stacks to be moved into and out of the chain conveyor path, said roller conveyor positioned after said collector station and before said first manual packing station.

4,373,321
SAFETY STIRRUP

James P. Prendergast, 29 MacFarlan St., South Yarra, 3141, Victoria, Australia

Continuation-in-part of Ser. No. 952,094, Oct. 17, 1978, abandoned. This application Mar. 20, 1981, Ser. No. 246,002
Int. Cl.³ B68C *3/00*
U.S. Cl. 54—49 **10 Claims**

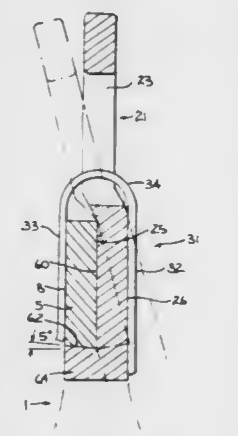

1. A stirrup safety device comprising:

a stirrup having a planar surface on the side of the bight thereof, said stirrup having an edge adjacent said planar surface:

a support for said stirrup having a plate-like portion with a planar surface and a portion adapted to receive a stirrup leather, said planar surface of said support being abuttable along only one side of said bight at the planar surface thereof; said plate-like portion of said stirrup support having a lip lying generally normal to the plate-like portion, the length of said lip corresponding generally to the thickness of said stirrup bight, said stirrup being positionable on said support with said edge resting on said lip and said planar surfaces in abutment; and

biasing means in the form of a U-shaped spring clip having two legs and a joinder portion, one of said legs contacting the bight of said stirrup and terminating short of said lip, the other of said legs contacting the plate-like portion of said support for biasing said planar surfaces of said stirrup and support into abutment with said lip and said edge in engagement so that said stirrup depends from said support, said biasing means being separable from said support and said stirrup,

said safety device being constructed and arranged such that in normal use with force applied to the stirrup by a rider, the stirrup will be supported by the support but such that when forces are applied to the stirrup at an angle to the support, the stirrup and support will pivot relative to one another against the biasing means until disengagement of the lip and the edge occur, whereupon the stirrup becomes separable from the support.

4,373,322
FLAIL-VACUUM SEED HARVESTER

Victor A. Beisel, Rte. 1, Fargo, Okla. 73840

Filed Sep. 14, 1981, Ser. No. 302,168
Int. Cl.³ A01D *45/30*
U.S. Cl. 56—126 **6 Claims**

1. A flail-vacuum seed and grain harvester, said harvester including an elongated horizontal housing adapted to be horizontally laterally advanced against a seed or grain crop and defining front and rear longitudinal sides and opposite ends, said housing including a pair of vertically spaced and registered downwardly concave and upwardly concave upper and lower generally partial cylindrical members, each of less than 180° in angular extent, extending between said ends and including corresponding front and rear arc end marginal portions extending longitudinally of said housing, the spacing between said partial cylindrical members defining a front-to-rear extending passage in said housing having an inlet end disposed between said front arc end marginal portions and an outlet end disposed between said rear arc end marginal portions, an elongated seed stripping rotary brush journalled in said housing between and extending longitudinally of said partial cylindrical members and including bristle ends which sweep across the opposing concave sides of said partial cylindrical members, the forward arc end portion of said upper partial cylindrical member diverging outwardly from the cylindrical path through which the outer periphery of said brush swings, the rear arc end portion of said upper cylindrical member including an extension extending generally tangentially rearwardly and downwardly from said path at an elevation spaced above the rear arc end of said lower partial cylindrical member, said housing including a longitudinally extending rear portion thereof disposed rearwardly of the axis of rotation of said brush and which is generally horizontal V-shaped in cross

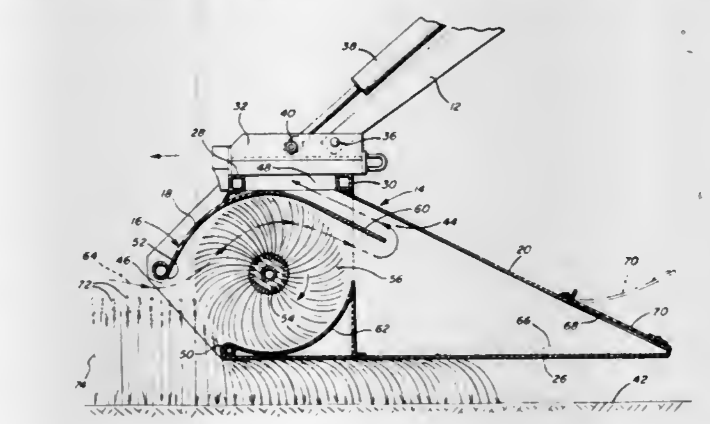

section and opens forwardly toward said brush, the free ends of the diverging leg portions of said horizontal V-shaped rear portion being generally horizontally aligned with the upper and lower peripheries of said brush, said tangential extension projecting into said rear portion and being spaced below and generally paralleling the upper leg portion thereof, the spacing between said extension and said upper leg portion comprising an outlet slot from said rear portion of said housing, motor means drivingly connected to said brush for rotating the latter in a direction with the lower periphery thereof moving forwardly and upwardly across said inlet, said outlet opening into the rear portion of said housing below said extension, said forward arc end of said upper partial cylindrical member being disposed forward of and above the forward arc end of said lower partial cylindrical member, the lower leg of said horizontal V-shaped rear housing portion comprising a support surface for harvested seed or grain.

4,373,323
TOBACCO LEAF STRIPPER

Thomas F. Jones, Maysville, Ky., assignor to Tobacco Machinery Co. of Ky. Inc., Maysville, Ky.

Filed May 11, 1981, Ser. No. 262,601
Int. Cl.³ A01D *45/16*
U.S. Cl. 56—27.5 **9 Claims**

1. A tobacco stripper for removing dried and cured tobacco leaves from a tobacco stalk severed from the ground, comprising:

(a) a base;

(b) at least four radially spaced and aligned rotatable pulleys having parallel axes of rotation supported upon said base;

(c) a pair of radially aligned counter-rotating endless belts rotatably carried by said pulleys, at least two of said pulleys engaging the interior surface of each of said belts, said belts have a plurality of impact teeth on their exterior surfaces, said teeth being separated from each other in the direction of belt movement by an interposed spacing adapted to accommodate the diameter of a tobacco stalk, said teeth and interposed spacing extending transversely across the entire width of the belts in a direction substantially perpendicular to the direction of belt movement, at least one pulley engaging the interior surface of each belt, said at least one pulley being separated to form a spaced nip between the belts adapted to accommodate a tobacco stalk; and

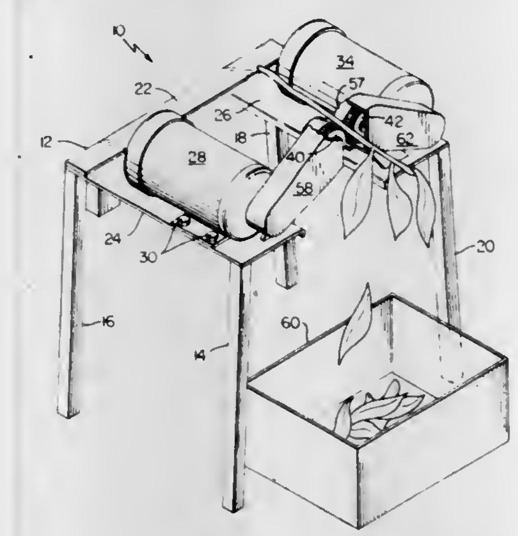

(d) drive means associated with at least one pulley engaged with each belt, said drive means being operative to produce counter-rotating movement of said belts.

4,373,324
GUIDE APPARATUS FOR FLEXIBLE ELEMENTS CONNECTED TO RELATIVELY MOVING UNITS

Alfred G. Janos, Hustisford, Wis., assignor to Maysteel Corporation, Mayville, Wis.

Filed Sep. 2, 1980, Ser. No. 182,863
Int. Cl.³ F16G *13/16*
U.S. Cl. 59—78.1 **21 Claims**

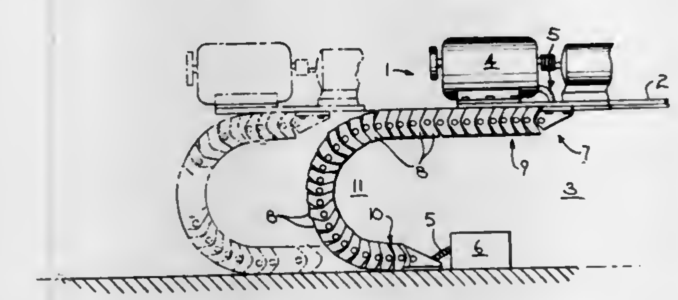

1. A self-supportive guide duct apparatus for guiding elongated flexible elements connected between a pair of laterally displaced relatively moving devices with a fixed bending radius, comprising a series of tubular duct elements including substantially parallel end walls and interconnecting substantially parallel side walls and defining a continuous articulated tubular duct enclosure for receiving of said elongated flexible elements, first and second spaced pivot support means secured to said side walls for pivot connection of adjacent duct elements, said duct elements being mounted in telescoped relations with the opposite pivot support means aligned and connected to pivotally support adjacent telescoped duct elements, the telescoped duct elements having interfitting end walls and side walls, and said side walls including interior stop wall means arranged and oriented to permit relative limited pivotal movement from an in-line position in one direction only and establishing interior interference surfaces preventing pivotal movement in the direction opposite said one direction from said in-line position, the exterior walls of said telescoping duct portions and the adjacent opposed interior walls being constructed and shaped to define complementing curved surfaces establishing close fitting spaced telescoping portions during pivotal movement to maintain an essentially continuous tubular enclosing guide for the elongated flexible elements.

4,373,325
COMBUSTORS

Jack R. Shekleton, San Diego, Calif., assignor to International Harvester Company, Chicago, Ill.

Filed Mar. 7, 1980, Ser. No. 128,360
Int. Cl.³ F23R *3/14, 3/30*
U.S. Cl. 60—39.06 **53 Claims**

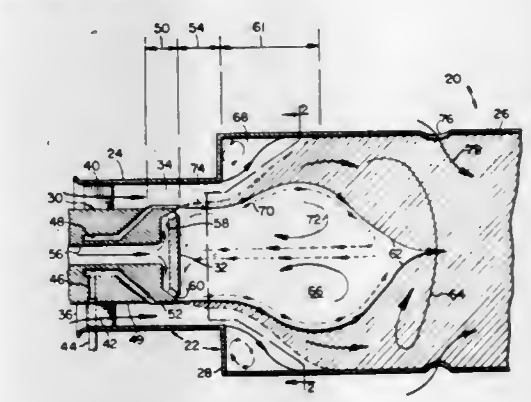

1. A method of effecting the stable, nonluminous combustion of a liquid fuel which comprises the steps of: generating an annulus of axially moving, rotating combustion air; forming a thin, uniform film of fuel on the inner boundary of said annulus at a specified location therealong; atomizing said fuel by contact between said fuel and said combustion air only after said film has been formed on the inner boundary of said annulus and so as to form a stratified annulus of small fuel droplets which resist centrifuging into the swirling annulus of combustion air; thereafter rapidly expanding said stratified annuli of combustion air and fuel droplets to promote the mixing and subsequent combustion of said fuel and air and then so effecting a downstream contraction of the swirling fuel-air mass as to effect the formation of a recirculation zone containing hot gases which stabilize the flame generated by the combustion of the fuel and air and so ignite the fuel as to effect evaporation and heating of the fuel before said stratified annuli of atomized fuel and rotating combustion air are rapidly expanded to promote the mixing of said fuel with the combustion air.

4,373,326
CERAMIC DUCT SYSTEM FOR TURBINE ENGINE

Charles H. Smale, Indianapolis, Ind., assignor to General Motors Corporation, Detroit, Mich.

Filed Oct. 22, 1980, Ser. No. 199,587
Int. Cl.³ F02C *3/10*
U.S. Cl. 60—39.161 **4 Claims**

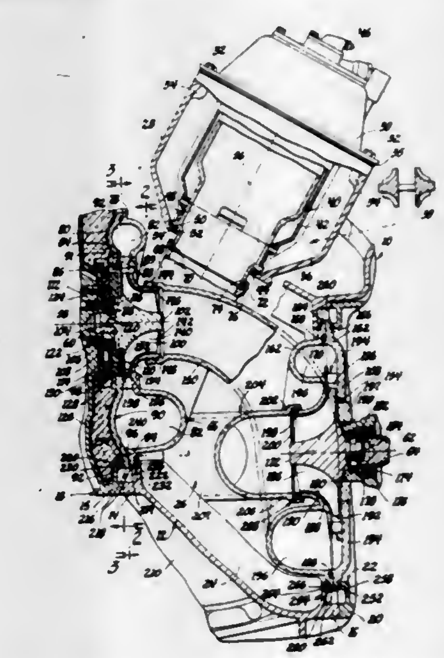

1. In a gas turbine engine having a metal engine block for

housing a gear train, a combustor, a gasifier spool with a gasifier turbine rotor and a power turbine spool with a turbine rotor, the improvement comprising: first ceramic housing means defining a gasifier turbine rotor chamber, said first ceramic housing means having a center outlet duct and a curved inlet duct segment thereon wrapped around said center outlet duct and inclined with respect to the axis of the gasifier spool and adapted to be connected to the outlet of the combustor for supplying motive fluid to the gasifier spool, a second ceramic housing means defining a chamber for a power turbine rotor located to arrange the axis of the power turbine spool at a point offset from the axis of the gasifier spool, said second ceramic housing means having an inlet duct conformation thereon fit within said curved inlet duct segment and connected to said center outlet duct to bridge the offset distance between the axes of the gasifier spool and the power turbine spool and including a center outlet, said inlet duct conformation having a reduced axial flow length therethrough to reduce pressure loss as motive fluid passes from the gasifier turbine to the power turbine, and means to connect the first and second ceramic housing means to said metal engine block to isolate the supported ceramic components from mechanical and thermal loading during operation of the gas turbine engine.

4,373,327
GAS TURBINE ENGINE COMBUSTION CHAMBERS
Richard C. Adkins, Milton Keynes, England, assignor to Rolls-Royce Limited, London, England
Filed Jun. 27, 1980, Ser. No. 163,481
Claims priority, application United Kingdom, Jul. 4, 1979, 7923319
Int. Cl.³ F02C *3/14*
U.S. Cl. 60—39.37 **8 Claims**

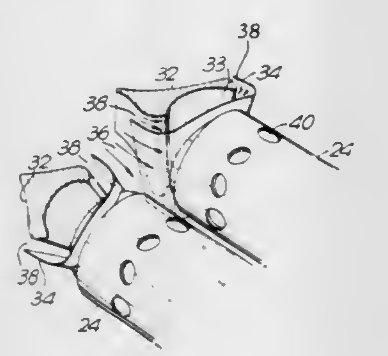

1. A gas turbine engine combustion system comprising:
an annular housing defined by inner and outer annular walls;
a plurality of combustion chambers equi-spaced apart and circumferentially arranged within said annular housing, each of said combustion chambers having an upstream and a downstream end;
a diffusion passage upstream of the upstream ends of said combustion chambers, said diffusion passage including inner and outer annular walls connected respectively to said inner and outer annular walls of said annular housing, said inner and outer walls of said diffusion passage converging in an upstream direction and arranged to receive a flow of compressed air; and
a plurality of aerodynamic struts extending between said inner and outer walls of said diffusion passage, each of said struts being adjacent to and upstream of and in alignment with a respective one of said combustion chambers, each of said struts being wedge-shaped in plan form and having an upstream apex, a downstream base spaced from the upstream apex of the respective one of said combustion chambers and sidewalls extending the full height of said diffusion passage, each of said struts having a circumferential width and radial height increasing from the apex thereof in a downstream direction to the base thereof whereby said diffusion passage increases in radial height and decreases in circumferential width in a downstream direction so as to decrease diffuser area ratio.

4,373,328
THRUST REVERSER
Robert A. Jones, Madison, Conn., assignor to United Technologies Corporation, Hartford, Conn.
Filed Oct. 22, 1980, Ser. No. 199,403
Int. Cl.³ F02K *3/06;* **B64C** *15/06*
U.S. Cl. 60—226.2 **4 Claims**

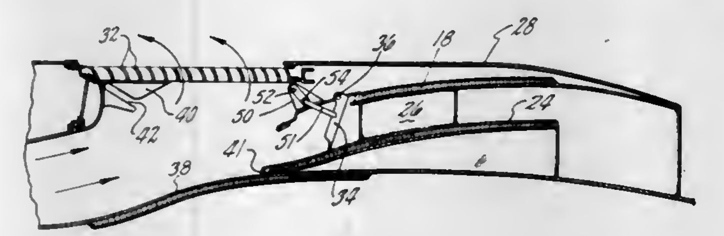

1. A thrust reverser for a fan jet engine supported in a nacelle of an aircraft having an annular passageway for conducting flow discharging from the fan, splitter means in said passageway cooperating with the walls of said annular passageway cooperating with the walls of said annular passageway for defining coaxial passages for dividing said flow into two coannular streams, a cascade coaxially disposed relative to said splitter, said nacelle having a slidable annular structure nesting said cascade and moveable to expose it to said passageway for reversing the flow of fan discharge air into ambient for thrust reversal, means attaching said splitter to said annular structure for moving said splitter in the same direction as said annular structure, said splitter having one end contoured to bear against the inner wall of said annular passageway in the deployed position for blocking the flow of the inner coannular stream of said coannular streams and blocker door means moveable with said slideable annular structure to a flow blocking position for blocking the flow of the outer of said coannular streams whereby the flow discharging from said fan is diverted to flow through said cascade.

4,373,329
TUBULAR EXHAUST MANIFOLD
Alfred R. G. Martini, Grass Lake, Mich., assignor to Tenneco Inc., Bannockburn, Ill.
Filed Jun. 30, 1980, Ser. No. 164,603
Int. Cl.³ F01N *3/34, 7/10*
U.S. Cl. 60—305 **17 Claims**

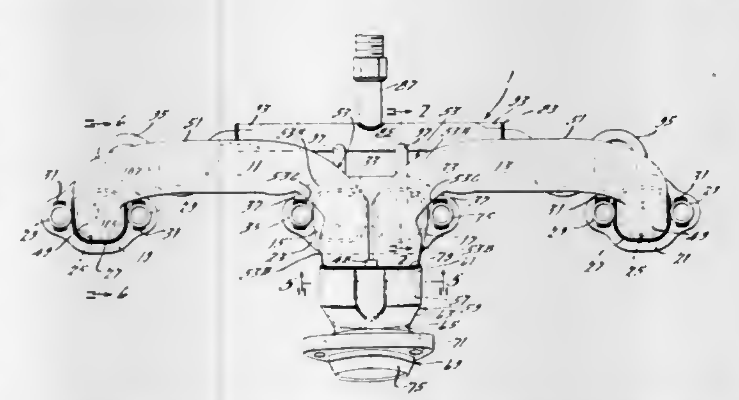

1. A fabricated metal exhaust gas manifold for an internal combustion engine, said engine having separate four in line exhaust gas ports for four different cylinders opening out of an outer surface of the engine, said manifold defining a compact envelope having a length corresponding to the distance between the first and last of said gas ports and a width and a height that are significantly less than said length and comprising a collector member having an outlet bushing for connection to an exhaust pipe and an internal exhaust gas collecting and mixing chamber in gas flow communication with said outlet, a pair of outer long pipes and a pair of inner short pipes having outlet ends bunched together inside said collector member with their outlet ends opening into said chamber, first means uniting said collector member and outlet ends in a rigid and gas-tight manner, said pipes extending away from said collector member and curving substantially 90° away from said collector member and spaced from one another so that they may be connected to different exhaust gas ports, said long pipes extending to the first and last of said four in line gas ports and said short pipes extending to the second and third of said gas ports, said pipes having inlet ends each adapted to receive gas from an exhaust gas port, and second means including a plurality of separate flanges mounted on said inlet ends for removably attaching the pipes to the outer surface of an engine in gas flow communication with the exhaust gas ports, said collector member being substantially tubular and said flanges being substantially flat and coplanar, said outlet ends and said collector member extending in a direction substantially parallel to the plane of said flanges, the outer ends of said inner short pair of pipes being adjacent to said plane and the outlet ends of said outer long pipes being spaced away from said plane by the outlet ends of said short pipes.

4,373,330
DIESEL ENGINE DUAL PATH EXHAUST CLEANER AND BURNER SYSTEM
Terrence L. Stark, Washington, Mich., assignor to General Motors Corporation, Detroit, Mich.
Filed Jun. 29, 1981, Ser. No. 278,088
Int. Cl.³ F01N *3/02*
U.S. Cl. 60—311 **3 Claims**

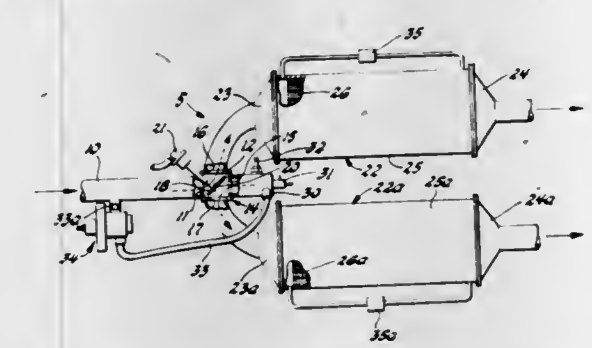

1. A dual path exhaust cleaner and burner system for use with a diesel engine, said system including an exhaust passage for receiving spent combustion products exhausted from the engine; a four-way valve means having a first inlet connected to said exhaust passage, said valve means also having a second inlet opposite said first inlet and opposed first and second outlets with a movable valve for the selective control of flow from said first and second inlets to said first and second outlets; a secondary passage means connected to said second inlet; first and second housing means each having a gas inlet connected to said first and second outlets, respectively, and each having a gas outlet therefrom; first and second particulate trapping filter means of combustion resistant material operatively positioned in said first and second housing means, respectively; heating means operatively associated with said particulate trapping filter means to effect the incineration of particulates collected thereon during operation of the engine; and, a regulated flow exhaust passage means, including a constant flow valve means, connected at one end to said secondary passage means and connectable at its opposite end to said exhaust passage whereby a constant predetermined flow of exhaust gas, as controlled by said constant flow valve means, can be supplied to one of said particulate trapping filter means so as to effect a controlled complete incineration of particulates thereon.

4,373,331
MANIFOLD ON AN INTERNAL COMBUSTION ENGINE
Andres Santiago, and Enrique Santiago, both of Diedorf, Fed. Rep. of Germany, assignors to Zeuna-Staerker GmbH & Co. KG, Fed. Rep. of Germany
Filed Sep. 4, 1980, Ser. No. 184,091
Claims priority, application Fed. Rep. of Germany, Sep. 6, 1979, 2935926; Nov. 8, 1979, 2945079
Int. Cl.³ F01N *7/10*
U.S. Cl. 60—323 **9 Claims**

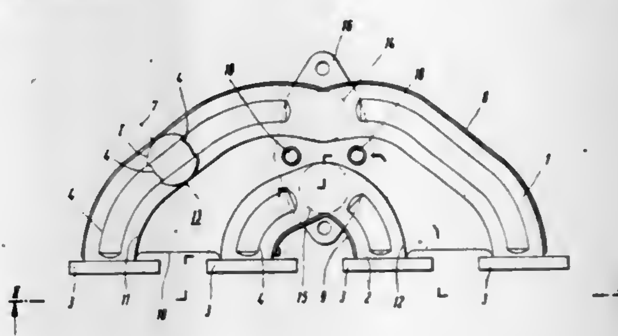

1. A manifold for an internal combustion engine for conducting exhaust gases from the engine to exhaust piping, said manifold comprising:
two half shells;
each half shell shaped such that when welded to the other half shell pipe lines are defined which lead from each exhaust gas port of the engine, and at least one flat web is defined between said pipe lines;
each half shell comprising two steel sheets overlaying one another, at least the sheet to be positioned adjacent the other half shell being comprised of non-scaling steel, and a thin insulating layer of a compressible, heat resistant material between said sheets only in the areas where said pipe lines are to be defined;
said half shells and said two steel sheets of each half shell all being welded together along the edges of the pipe lines and at a plurality of points in said web;
said pipe lines thereby being comprised of an upper wall portion defined by one half shell and a lower wall portion defined by the other half shell, said web thereby being comprised of flat portions of both half shells welded together at least at their respective edges where said pipes are defined and mutually supporting one another.

4,373,332
MOVEMENT COMPENSATION ARRANGEMENT
Hans K. Holmen, Sandvika, Norway, assignor to A/S Tele-Plan, Lysaker, Norway
Filed Jan. 23, 1980, Ser. No. 114,774
Claims priority, application Norway, Jan. 31, 1979, 790311; Apr. 24, 1979, 791356
Int. Cl.³ F15B *9/17*
U.S. Cl. 60—426 **12 Claims**

1. An arrangement for compensating for undesired movements of a load relative to a station, comprising an element which is adapted to be coupled to the load by a force-transmitting member and is mounted on the station so as to be movable with respect thereto; first and second hydropneumatic pressure containers, and a main hydraulic machine of variable displacement and operable both as a motor and as a pump and connected to the containers so that in its motor mode of operation it is driven by flow of fluid under pressure from the first container to the second container and in its pump mode of operation it pumps fluid from the second container into the first container, means which couple drivingly the hydraulic machine and the movable element for moving the movable element so as to maintain control of the force exerted on the element by the load through the force-transmitting member upon movement of the load; an auxiliary hydraulic machine including a motor device which is coupled drivingly to the

movable element and a pump device which is in fluid communication with the motor device, the pump device having a variable power output; a load position sensor and a control unit connected to the hydraulic machines for controlling the displacement of the hydraulic machines in response to input signals received thereby from the hydraulic machines and from the load position sensor, and the control unit being also con-

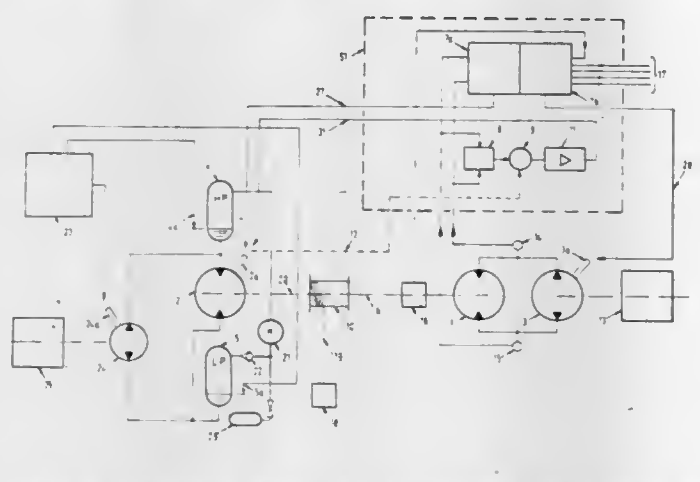

nected to the pump device for controlling the power output therefrom, one input signal to the control unit being representative of the pressure difference across said pump device; and the main hydraulic machine in operation provides static compensation whereby the pump device and motor device provide dynamic compensation and thereby obtain a controlled position of the load.

4,373,333

QUICK TAKE-UP MASTER CYLINDER WITH CHECK VALVE ASSEMBLY

John R. Coleman, Dayton, Ohio, assignor to General Motors Corporation, Detroit, Mich.

Filed Aug. 27, 1981, Ser. No. 296,884

Int. Cl.³ B60T *11/08;* F16K *15/04*

U.S. Cl. 60—578 1 Claim

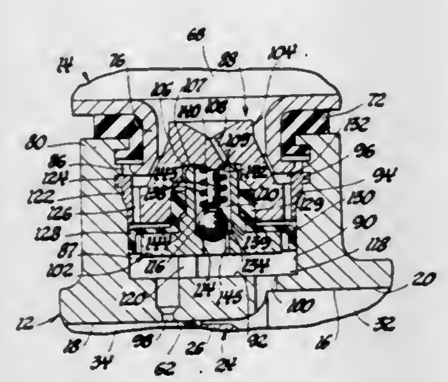

1. In a quick take-up master cylinder having a reservoir, first and second pressurizing chambers respectively provided with first and second pistons for pressurizing brake fluid therein, said first pressurizing chamber being a low pressure high volume displacing chamber and said second pressurizing chamber being a high pressure low volume displacing chamber, a compensation control and blow-off valve unit wherein the blow-off valve thereof is a check valve assembly having a valve body, a valve chamber formed in said body and defined by spaced end walls and a side wall, an inlet port in continuous fluid communication with said first pressurizing chamber and opening through one of said end walls into said valve chamber to define a valve seat therein, a ball check valve in said valve chamber normally seated on said valve seat, a compression coil spring in said valve chamber having one spring end seated on the other of said end walls and the other spring end engaging said ball check valve, said coil spring urging said ball check valve toward said valve seat, and an outlet port in said valve body providing continuous communication from said valve chamber to said fluid reservoir, said first piston when moved in the actuating direction generating a quick take-up pressure in said first pressurizing chamber initially transmitted to said second pressurizing chamber and at a predetermined pressure opening said ball check valve and thereafter desirably causing a high fluid flow at a predetermined low noise level through said input port and said outlet port to said reservoir;

means for reducing fluid flow noise and fluid flow restriction within said valve chamber when fluid pressure from said first pressurizing chamber opens said ball check valve by compressing said coil spring to allow the desired fluid flow from said inlet port through said valve chamber and said outlet port, said means including

a ball check valve opening movement limiting device extending from said check valve chamber other end wall into said coil spring and in alignment with said ball check valve but spaced from said ball check valve when said ball check valve is seated on said valve seat, and engaged by said ball check valve upon a predetermined limited amount of ball check valve opening movement to prevent sufficient compression of said coil spring which would otherwise cause the coils thereof to incipiently become a solid stack and generate a fluid flow noise exceeding said predetermined low noise level because of the proximity of the coils to each other, and further so that the desired fluid flow can flow through the coils of said spring within said valve chamber due to the reduction in fluid flow restriction;

said outlet port being offset from the axis of said limiting device and said coil spring so that the end of the outlet port at said valve chamber is positioned radially outside the spring seating portion of said other end wall, thereby to further reduce fluid flow restriction by providing a fluid flow path from said inlet to said outlet outside said coil spring.

4,373,334

DEVICE FOR VARIABLE HEIGHT ADJUSTMENT OF SUPPORTS

Lars E. Carlander, Kransvägen 112, Boras, Sweden (502 51)

Filed Sep. 25, 1948, Ser. No. 190,211

Claims priority, application Sweden, Sep. 26, 1979, 7907974

Int. Cl.³ B60T *7/02;* F01B *3/00*

U.S. Cl. 60—594 2 Claims

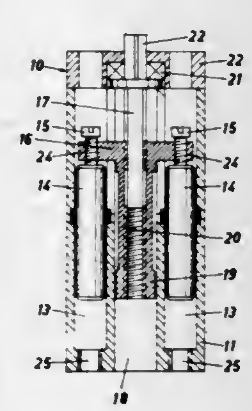

1. An adjustment means for variable height adjustment of fluid pressure operable supports, e.g. legs to vertically adjustable tables, chairs, beds etc., comprising, a cylindrically shaped housing member, a central bore in said housing and coaxial therewith, a number of individual cylindrical pressure chambers within said housing radially spaced outwardly with respect to and extending parallel to said central bore and circumferentially spaced equidistantly with respect to each other, the number corresponding to the number of supports, a piston in each pressure chamber adapted for reciprocation therein, a driving nut unrotatably but axially displaceably mounted in the housing, said axial displacement being parallel to the reciprocation of said pistons, an internally screw threaded bore in said driving nut, a screw threaded spindle rotatably mounted in the

housing, said screw threaded bore and spindle being in operative engagement so that rotation of said spindle axially displaces said driving nut, an individual adjusting screw for each piston threadedly mounted in said driving nut so that the inner end of each screw operatively engages one end of the respective piston, an elongated sleeve shaped guide member on said driving nut having an internal screw thread thereon cooperatively engaging the screw threads on said spindle, said guide member extending coaxially in said central bore from said nut between said pressure chambers and being guided for axial displacement in said central bore, means for connecting said spindle to a drive means, and a connection means in said housing communicating with each pressure chamber at the other end of each piston to facilitate connecting each pressure chamber by a conduit means to one of said fluid pressure operable supports so that when so connected with said conduit means, pressure chambers and supports containing a fluid pressure medium, rotation of said spindle will displace said pistons axially in said cylinders to operate said supports and said individual adjusting screws can operate each piston with respect to each other and each respective support with respect to the other supports.

4,373,335

SUPERCHARGE SYSTEM OF AN INTERNAL COMBUSTION ENGINE

Yasushi Kuribayashi, Yokohama, Japan, assignor to Nissan Motor Co., Ltd., Yokohama, Japan

Filed Oct. 3, 1980, Ser. No. 193,454

Claims priority, application Japan, Oct. 5, 1979, 54-137420[U]

Int. Cl.³ F02B *37/12*

U.S. Cl. 60—602 2 Claims

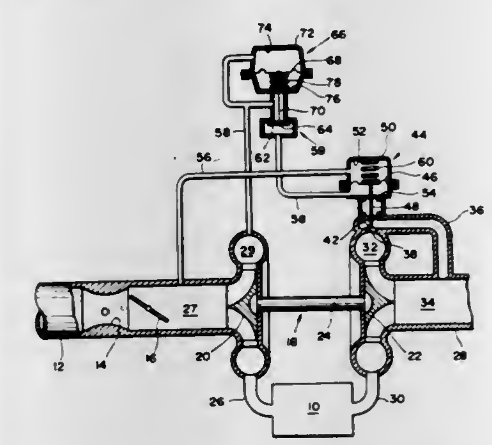

1. A supercharge system of an internal combustion engine including an intake passageway having a throttle valve therein, and an exhaust passageway, the supercharge system comprising:

a turbosupercharger having a turbine disposed in the exhaust passageway so as to be driven by exhaust gas of the engine, and a compressor disposed in the intake passageway downstream of the throttle valve and connected with said turbine so as to be driven by said turbine to force air into the engine at a pressure higher than the atmospheric pressure;

an exhaust bypass passage which branches from the exhaust passageway at a portion upstream of said turbine and joins the exhaust passageway at a portion downstream of said turbine so as to bypass said turbine;

an exhaust bypass valve for selectively opening and closing said bypass passage;

a bypass valve actuating device having a first pressure chamber, a second pressure chamber, a flexible diaphragm connected to said bypass valve and separating said first and second pressure chambers from each other, said diaphragm being movable into such a first position that said bypass valve opens said bypass passage and into such a second position that said bypass valve closes said bypass passage, and a return spring for biasing said diaphragm in such a direction that said bypass valve closes said bypass passage;

a first passage for providng communication between said first pressure chamber and a first portion of the intake passageway which is located downstream of the throttle valve between the throttle valve and said compressor;

a second passage for providing communication between said second pressure chamber and a second portion of the intake passageway which is located downstream of said compressor; and

a pressure difference adjusting valve for adjusting the difference between the pressures in said first and second pressure chambers such that said bypass valve is opened when the pressure in said first portion of the intake passageway is below a first predetermined value and when the pressure in said second portion of the intake passageway is above a second predetermined value which is higher than said first predetermined value, and that said bypass valve is closed when the pressure in said first portion is above said first predetermined value and the pressure in said second portion is below said second predetermined value,

said pressure difference adjusting valve comprising:

a valve member for selectively opening and closing said second passage, and

a valve member actuating device comprising:

a third chamber communicating with said second portion,

a fourth chamber communicating with the atmosphere,

another flexible diaphragm connected with said valve member and separating said third and fourth chambers from each other, said another diaphragm being movable into such a third position that said valve member closes said second passage and into such a fourth position that said valve member opens said second passage, and

a return spring for biasing said another diaphragm such that said another diaphragm is moved in response to the difference between the pressures in said third and fourth chambers into said third position to stop the feed of the pressure in said second portion to said second pressure chamber when the pressure in said second portion is below said second predetermined value and into said fourth position to effect the feed of the pressure in said second portion to said second pressure chamber when the pressure in said second portion is above said second predetermined value.

4,373,336

INTERNAL COMBUSTION ENGINE HAVING A TURBO-SUPERCHARGER WITH AN AUTOMATIC BYPASS

Hansulrich Hörler, Zurich, and Erwin Meier, Remetschwil, both of Switzerland, assignors to BBC Brown, Boveri & Company, Limited, Baden, Switzerland

Filed Dec. 20, 1979, Ser. No. 105,774

Claims priority, application Switzerland, Jan. 31, 1979, 923/79

Int. Cl.³ F02B *37/00*

U.S. Cl. 60—606 2 Claims

1. In an internal combustion engine of the type having a turbocharger compressor connected to an engine charge air intake manifold and a waste gas turbine connected to an engine waste gas manifold, an automatic bypass including a bypass line interconnecting, firstly, said waste gas manifold upstream of the waste gas turbine and, secondly, said air intake manifold downstream of said compressor, and bypass valve means in said bypass line comprising a valve seat, an adjustable valve body defining with said seat a throttle member for adapting the quantity of bypassed gas to the prevailing operating state of the engine, a movable piston rod having a first end adjacent said air intake manifold and to which said valve body is connected, and an actuating piston operably connected to said piston rod and responsive to pressures in the bypass line for moving said valve body, the improvement wherein:

said piston rod includes a second end remote from said air

intake manifold, said actuating piston disposed on said second end,

said throttle means defining means for resisting gas flow from the compressor side to the turbine side substantially less than from the turbine side to the compressor side,

said valve body being urged to an open condition when the pressure at said compressor side of said bypass valve is within a range below a selected pressure value under load conditions and above a pressure value existing under conditions of engine idling,

means for communicating said actuating piston with the pressure at said compressor side of said bypass line to move said valve body from a valve open position to a valve closed position in response to pressures above said selected value at said compressor side,

an adjustable stop element provided for adjustably limiting the stroke of said valve body in a valve opening direction, said valve body disposed in engagement with said valve seat in said valve closed position,

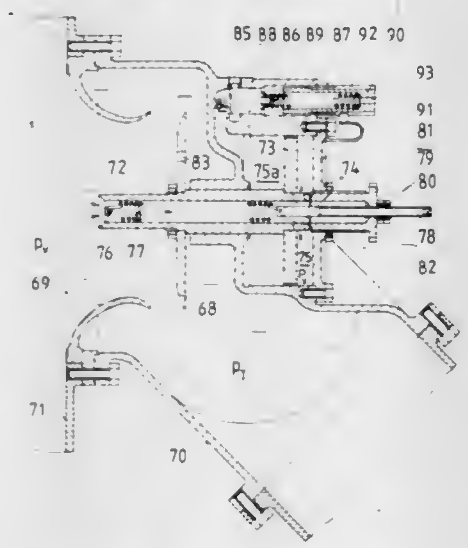

said piston rod being hollow and including transverse bores for connecting the charge air intake manifold with a space behind said actuating piston,

a spring for urging said valve body open, said spring comprising a helical tension spring, one end of said spring connected to said piston rod, and another end of said spring fixed to a threaded element operably connected to said spring and being adjustable to vary the prestress of said spring,

said threaded element comprising a threaded spindle, a threaded bushing mounted for adjustment along the axis of said piston rod, a first nut threadedly mounted on said bushing to locate the latter, said spindle extending through said bushing, a second nut threadedly mounted on said spindle and abutting said bushing to locate said spindle, said bushing defining said stop element for limiting the stroke of said valve body.

4,373,337
TURBOCHARGED INTERNAL COMBUSTION ENGINE WITH SPARK IGNITION

Wolfgang Widmann, Ludwigsburg, Fed. Rep. of Germany, assignor to Daimler-Benz A.G., Stuttgart, Fed. Rep. of Germany
Filed Aug. 18, 1980, Ser. No. 179,258
Claims priority, application Fed. Rep. of Germany, Aug. 18, 1979, 2933556
Int. Cl.³ F02B *37/00*
U.S. Cl. 60—611 **5 Claims**

1. An internal combustion engine with spark ignition, the engine including an exhaust gas turbocharger means for supplying supercharging air to the engine, a charging air line means for conveying supercharging air to an intake manifold of the engine, a throttle valve means arranged in a path of flow of the supercharging air for enabling a power control of the engine, and a bypass air line means connected to the charging air line means and terminating in an air inlet line at a position upstream of the turbocharger means, and a throttle means arranged in an inlet cross section of the bypass air line means, characterized in that the throttle means is constructed as a further throttle valve means, and in that means are provided for mechanically connecting the throttle valve means and

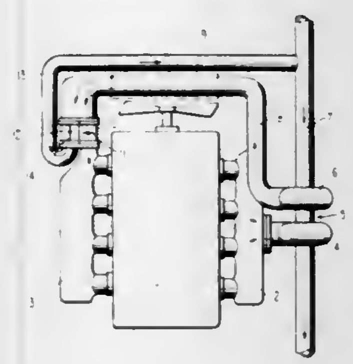

further throttle valve means such that the throttle valve means opens as the further throttle valve means closes and vice versa, with the further throttle valve means of the bypass air line means closing somewhat earlier before the other throttle valve means is entirely open.

4,373,338
SYSTEM FOR GENERATING ENERGY USING THE TEMPERATURE DIFFERENCE BETWEEN THE WATER TEMPERATURE AT THE SEA SURFACE AND THE WATER TEMPERATURE AT GREATER DEPTH

Barend J. G. van der Pot, Delft, Netherlands, assignor to Hollandsche Beton Groep N.V., Rijswijk, Netherlands
Filed Jan. 2, 1981, Ser. No. 222,226
Claims priority, application Netherlands, Jan. 11, 1980, 8000183
Int. Cl.³ F03G *7/04*
U.S. Cl. 60—641.7 **3 Claims**

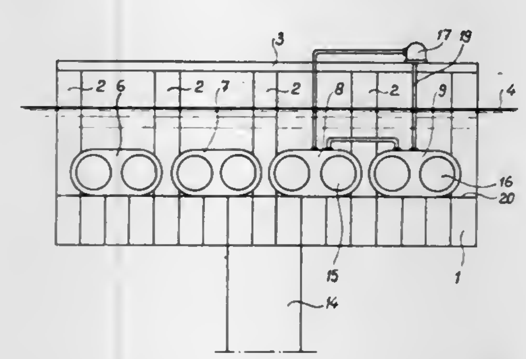

1. In a floating device for generating energy by using a temperature difference between the water temperature at the sea surface and the water temperature at a great depth therefrom, said device including a pontoon; a plurality of columns mounted on said pontoon, said columns intersecting the water surface in the operative position of the device with said pontoon below water level; an upper structure mounted on said columns; a downwardly extending cold water duct suspended from said pontoon; a plurality of energy converting units attached to said columns below water level, each of said energy converting units comprising at least one traversing channel with a pump and heat exchanger, and said energy converting units being in connection with said downwardly extending cold water duct and in connection with warm water of the environment therearound; and means for converting thermal energy resulting from said temperature difference into another form of energy, the improvement comprising said pontoon being box shaped and having a closed central cold water chamber defined by an upper wall, a lower wall and inner walls, said lower wall being joined to said cold water duct; and wherein said energy converting units are mounted upon a flat upper side of said pontoon, said energy converting units having outlet openings at a side of one side wall of said pontoon with a cold water channel inlet being formed at a lower side of said side wall joining an opening in said upper wall of said cold water chamber and having a warm water channel inlet in said upper side.

4,373,339
THERMAL ENERGY CONVERSION SYSTEM AND METHOD UTILIZING UNENCASED EXPANDITES

Jens O. Sorensen, Rancho Santa Fe, Calif., assignor to Trade Finance International, Georgetown, Cayman Islands
Continuation-in-part of Ser. No. 25,800, Apr. 2, 1979, Pat. No. 4,214,449. This application Dec. 14, 1979, Ser. No. 103,573
Int. Cl.³ F01K *25/06*
U.S. Cl. 60—649 **76 Claims**

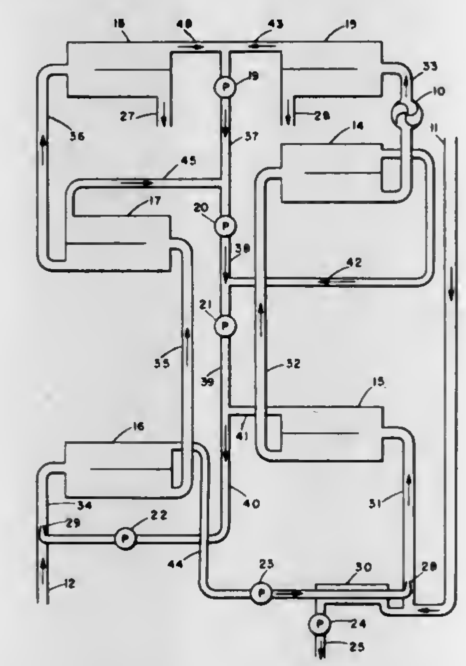

1. A method of thermal energy conversion comprising the steps of:

(a) providing a mass of unencased fluid expandites in a mass transport conduit circuit at a first combination of temperature and pressure;

(b) introducing a non-gaseous thermal fluid into the mass transport conduit circuit from a source external to the mass transport conduit circuit at a second combination of temperature and pressure;

(c) combining the provided expandite mass with the introduced thermal fluid in a given conduit of the circuit to create an expandite-fluid mixture having a density at some place in the given conduit that is changed from the average proportional density of the expandite mass and the thermal fluid at their respective prevailing combinations of temperature and pressure prior to such combination with each other to create a pressure differential that enhances the flow of the fluid contained within the circuit;

(d) directing at least a portion of said fluids contained within the circuit to flow vertically through a given portion of the conduit circuit to create a pressure differential in the given portion of the circuit in relation to the remainder of the conduit circuit to thereby enhance the flow of said fluids contained within the conduit circuit; and

(e) converting the pressure of at least a part of said enhanced flow of said contained fluids through the conduit circuit into a useful form of energy;

wherein step (a) comprises the steps of:

(f) separating from the expandite-fluid mixture, an expandite base which comprises at least a portion of said expandite mass; and

(f') thermally conditioning said expandite base.

4,373,340
PEAK LOAD DEVICE OF A MULTISTAGE TURBINE

Herbert Keller, Krähenbüschken 4, 4330 Mülheim, Fed. Rep. of Germany
Filed Jul. 23, 1980, Ser. No. 171,343
Claims priority, application Fed. Rep. of Germany, Jul. 25, 1979, 2930184
Int. Cl.³ F01K *13/00*
U.S. Cl. 60—677 **11 Claims**

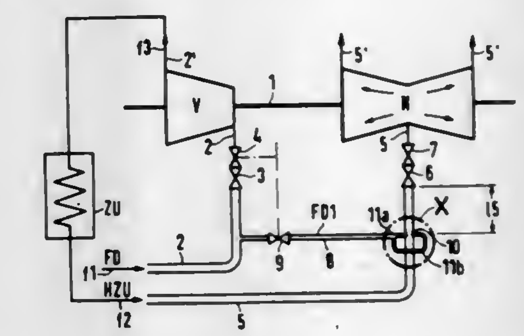

1. Peak load device of a multistage turbine, having a high pressure turbine section with an inlet pipe supplying working medium and an exhaust steam outlet, a subsequent turbine section having an inlet pipe connected to the exhaust steam outlet of the high pressure turbine section for receiving the exhaust steam thereof, a bypass line connected from the high pressure turbine section inlet pipe to the subsequent turbine section inlet pipe through which part of the working medium bypasses the high pressure turbine section as a bypass flow, comprising jet compressor inlet means disposed at the connection of the bypass line to the subsequent turbine section inlet pipe for receiving the bypass flow as a motive medium while increasing the pressure of the flow through the subsequent turbine section inlet pipe.

4,373,341
EXPANDIBLE PACKAGE FOR DISPENSING CONTAINERS

Reid A. Mahaffy, Montclair, and George W. Anderson, Little Falls, both of N.J., assignors to Mahaffy & Harder Engineering Co., Fairfield, N.J.
Filed Dec. 18, 1980, Ser. No. 217,702
Int. Cl.³ B65D *5/42*
U.S. Cl. 60—721 **16 Claims**

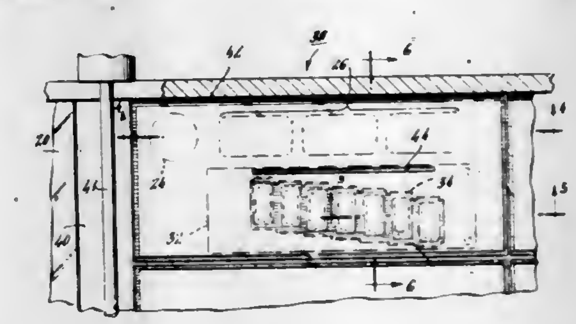

1. In a package to be inserted in a container to develop pressure for dispensing the container contents, said package being of the type comprising a sealed enclosure formed by flexible sheet material and containing therewithin a set of chemicals to be reacted together to form an initial gas pressure, said sealed enclosure further containing a plurality of individually sealed cells containing additional reactant chemicals and arranged to be ruptured sequentially as the package expands during a dispensing operation to effect reaction between said additional chemicals and one or more of said set of chemicals to produce additional increments of gas pressure within the sealed enclosure;

that improvement in such a package wherein;

said sealed enclosure comprises a first outer sheet member

formed with a plurality of pockets opening into the interior of the enclosure;
at least one of said pockets containing a first chemical component of said set of chemicals;
at least another of said pockets containing a second chemical component of said set of chemicals and capable of reacting with said first chemical component to develop an initial dispensing gas pressure;
said plurality of pockets in said first outer sheet member further comprising a set of pockets containing additional chemical material capable of reacting with at least one of said chemical components to develop further dispensing pressure;
said sealed enclosure including a second outer sheet member sealed peripherally to said first outer sheet member to form therewith said sealed enclosure encompassing all of said pockets;
a tape member between said first and second outer sheet members and positioned over the openings of said set of pockets, said tape member being sealed around the peripheries of said openings to prevent said chemical material therein from coming into contact with said chemical components;
said tape member being secured to said second outer sheet member to provide for progressive lift-off of said tape member from said first outer sheet member to open the peripheral seals around said set of pockets in sequence as the two outer sheet members separate during a dispensing operation, thereby permitting reactive contact between said additional chemical material and at least one of said chemical components to develop additional increments of gas pressure within said package.

4,373,342
COMBUSTION EQUIPMENT
Jeffrey D. Willis, and Nigel P. Gibney, both of Coventry, England, assignors to Rolls-Royce Limited, London, England
Continuation of Ser. No. 872,949, Jan. 26, 1978, abandoned. This application Feb. 20, 1980, Ser. No. 123,260
Claims priority, application United Kingdom, Feb. 4, 1977, 4558/77
Int. Cl.³ F23R *3/14*
U.S. Cl. 60—748 **2 Claims**

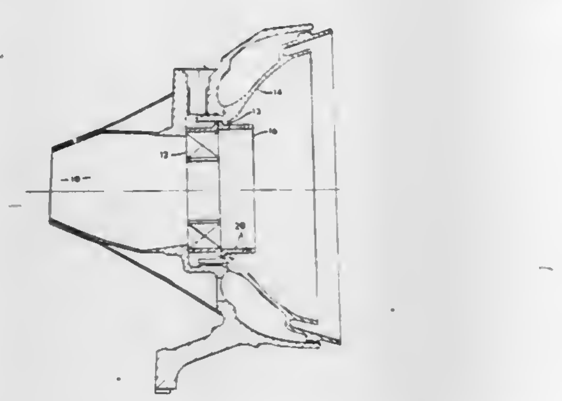

1. A gas turbine engine combustion chamber comprising:
a flame tube having a dome-shaped head portion provided with a central circular aperture from which said head portion immediately diverges downstream, said tube also having secondary air inlet apertures downstream of said head portion;
a swirler vane assembly mounted in and extending upstream of said central aperture, said assembly having spaced coaxial inner and outer annular sleeves with a ring of swirl vanes extending therebetween, said sleeves forming a single annular passage for the through flow of air into said tube, said inner sleeve being adapted to have a fuel nozzle fitted therein, and the diameter of the downstream edge of said outer sleeve being generally the same as that of said aperture; and
a cylindrical collar of substantially uniform diameter and substantially unobstructed interiorly throughout its length, said diameter being generally the same as that of said aperture, said collar being attached to said head portion and extending coaxially with and from said aperture into said flame tube, whereby in operation carbon accretion on the inner surface of said head portion is reduced substantially, recirculation and mixing of air and fuel is improved in the primary combustion zone upstream of said secondary air inlet apertures and weak flame extinction properties are improved.

4,373,343
HOT WATER PRODUCTION APPARATUS UTILIZING A HEAT PUMP
George A. A. Asselman, Eindhoven, Netherlands, and Albertus P. J. Michels, Laveno Mombello, Italy, assignors to U.S. Philips Corporation, New York, N.Y.
Filed May 8, 1981, Ser. No. 262,258
Claims priority, application Italy, May 12, 1980, 21983 A/80
Int. Cl.³ F25B *27/02*
U.S. Cl. 62—238.6 **4 Claims**

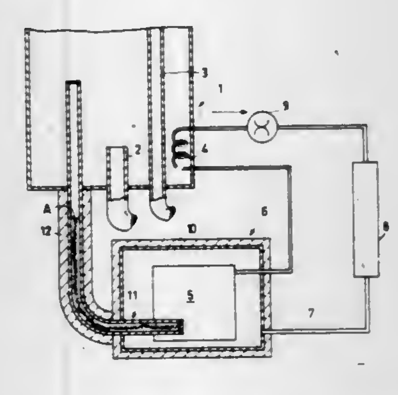

1. Hot water production apparatus comprising a container for water; a heat pump including a motor-compressor unit, a condenser and an evaporator connected in a closed circuit containing a heating fluid, said condenser being associated in heat-exchange relationship with the water in said container, said motor-compressor unit being disposed within a sealed casing in a bath of said heating fluid; and a heat pipe extending between a point within the water container and a point within the sealed casing and insulated over its portion between said water container and said sealed casing, said heat pipe being charged with an inert gas and an operating medium that in the range of 20° to 100° C. has a vapour pressure such that, at a temperature within said range, the front between the inert gas and the operating medium is situated in the portion of the heat pipe present in the water container.

4,373,344
METHODS AND APPARATUS FOR PRODUCING REFRIGERATION
John S. Hinn, Oakland, Calif., assignor to Airco, Inc., Montvale, N.J.
Filed May 18, 1977, Ser. No. 798,203
Int. Cl.³ F25D *25/00*
U.S. Cl. 62—62 **5 Claims**

1. A method for producing refrigeration comprising the steps of providing enclosure means having an internal passage between an inlet and an outlet in communication with ambient atmosphere; passing liquid carbon dioxide through a slot formed in said enclosure means peripherally of said internal passage to form a stream of carbon dioxide solid and gas interiorly of said enclosure means; directing said stream toward the outlet of said enclosure means; entraining ambient atmosphere through said inlet interiorly of and into said stream; and discharging said stream and entrained atmosphere from said outlet to thereby produce refrigeration.

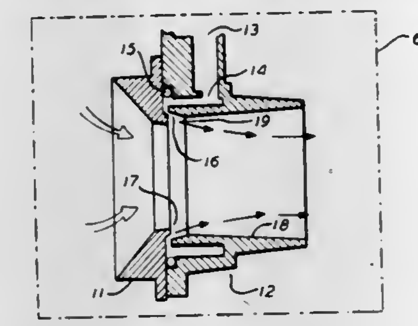

4,373,345
ICE-MAKING AND WATER-HEATING
Lewis Tyree, Jr., 145 Briarwood Ave., North, Oak Brook, Ill. 60521, and Harry C. Fischer, P.O. Box 1687, Cocoa, Fla. 32922
Filed Apr. 8, 1981, Ser. No. 252,159
Int. Cl.³ F25B *7/00*
U.S. Cl. 62—79 **13 Claims**

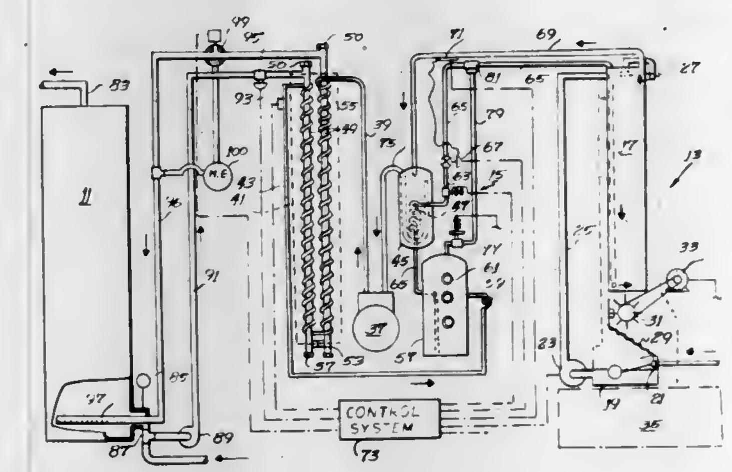

9. A method of forming ice and heating a liquid such as water, which method comprises
withdrawing liquid refrigerant from a reservoir of refrigerant in liquid and vapor form and expanding said withdrawn refrigerant to vapor to lower its temperature below the freezing point of water and create a cold source,
supplying water and said cold source to ice-maker means and freezing said water to form ice thereupon,
returning said expanded refrigerant vapor to a compressor and discharging hot high-pressure vapor therefrom to a condenser,
supplying liquid to the condenser where it is heated while condensing said high-pressure refrigerant vapor,
returning refrigerant from said condenser to said reservoir through restrictor means which causes a significant pressure drop therein, and
upon completion of ice formation of a desired thickness, halting said supply of said cold source to said ice-maker means, withdrawing relatively warm refrigerant vapor from said reservoir and supplying said withdrawn warm vapor to said ice-maker means to harvest said ice formed thereon whereby said returning of said high-pressure refrigerant to said reservoir through restrictor means assures that the transfer of heat to the liquid being heated in said condenser remains substantially constant throughout said harvest.

4,373,346
PRECOOL/SUBCOOL SYSTEM AND CONDENSER THEREFOR
Thomas H. Hebert, 4815 Sevena Dr., and Theodore M. Hebert, 10225 Hyaleah Rd., both of Tampa, Fla. 33617
Filed Mar. 25, 1981, Ser. No. 247,247
Int. Cl.³ F25B *7/00*
U.S. Cl. 62—79 **23 Claims**

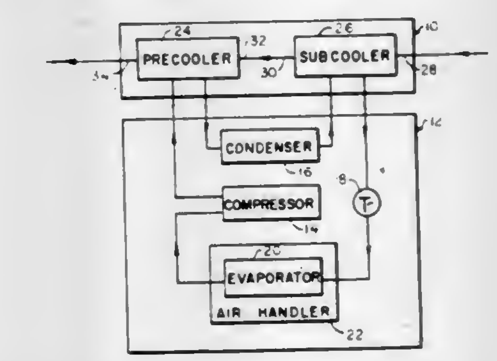

9. A method for increasing the efficiency and cooling capacity of a heat pump including an evaporator, a compressor, and a condenser operating in a cooling mode, comprising the steps of:
subcooling the refrigerant flowing from the condenser;
precooling the refrigerant prior to the refrigerant flowing through the condenser;
the step of precooling the refrigerant including the step of flowing a first fluid, having a temperature less than the temperature of the refrigerant, in a heat exchanging relationship with the refrigerant whereby the temperature of the refrigerant is decreased;
the step of subcooling the refrigerant including the step of flowing of a second fluid, having a temperature less than the temperature of the refrigerant, in a heat exchanging relationship with the refrigerant whereby the temperature of the refrigerant is decreased; and
regulating the flow rate of the fluid to subcool the refrigerant flowing from the condenser to a subcooled-liquid state and to precool the refrigerant flowing into the condenser to at least a saturated-vapor state.

4,373,347
HYBRID DOUBLE-ABSORPTION COOLING SYSTEM
John R. Howell, Austin, and C. S. Patrick Peng, Houston, both of Tex., assignors to Board of Regents, University of Texas System, Austin, Tex.
Filed Apr. 2, 1981, Ser. No. 250,319
Int. Cl.³ F25B *15/00*
U.S. Cl. 62—112 **25 Claims**

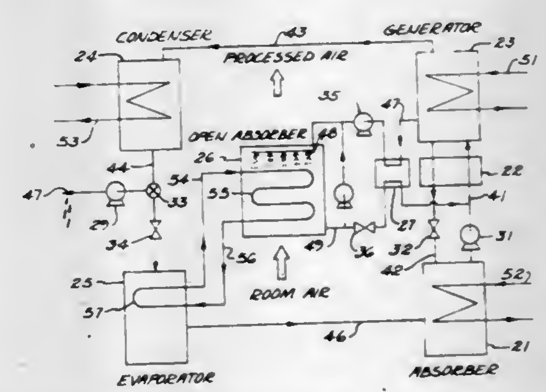

1. A hybrid double-absorption air cooling system utilizing low grade thermal energy comprising:
an open absorber employing a liquid desiccant solution for absorbing water vapor from air passing therethrough;
a cooling coil associated with said open absorber for cooling air passing through said open absorber; and

a vapor-absorption refrigeration system which uses the water vapor content of said liquid desiccant solution as an evaporable refrigerant and having means for cooling and circulating a first working fluid through said cooling coil and means for circulating said desiccant solution through said open absorber, said refrigeration system including:

a condenser for condensation of the heated water vapor evaporated from said desiccant solution to form condensed liquid water,

an evaporator in fluid communication with said condenser for evaporating said condensed water and for cooling said first working fluid,

an absorber connected to said evaporator for absorbing into the desiccant solution the vaporized water from said evaporator; and

a generator for receiving the absorbed solution from the absorber and generating the heated vapor of said desiccant solution for circulation to said condenser, said generator being in fluid communication with the open absorber for circulating a portion of said liquid desiccant through said open absorber.

11. A method of cooling a process air stream by utilizing low grade thermal energy comprising the steps of:

(a) contacting a liquid desiccant with water to form a desiccant solution;

(b) concentrating the desiccant solution by placing it in heat exchange relation at subatmospheric pressure with a low grade energy source so as to vaporize at least a portion of the water from the desiccant solution;

(c) collecting and condensing the vaporized water;

(d) revaporizing the condensed water while placing it in heat exchange relationship with a first working fluid;

(e) diluting at least a portion of the concentrated desiccant solution by bringing it in contact with the process air stream so as to remove water from the process air stream;

(f) placing the process air stream in heat exchange relation with the first working fluid; and

(g) contacting the desiccant solution with the revaporized water.

4,373,348

ENERGY SAVING REFRIGERATION SYSTEM

Fayez Ibrahim, and Edward Bowman, both of Niles, Mich., assignors to Tyler Refrigeration Corporation, Niles, Mich.

Division of Ser. No. 57,350, Jul. 13, 1979, Pat. No. 4,286,437. This application Jan. 21, 1981, Ser. No. 226,843

Int. Cl.[3] F25B *1/00*

U.S. Cl. 62—115 11 Claims

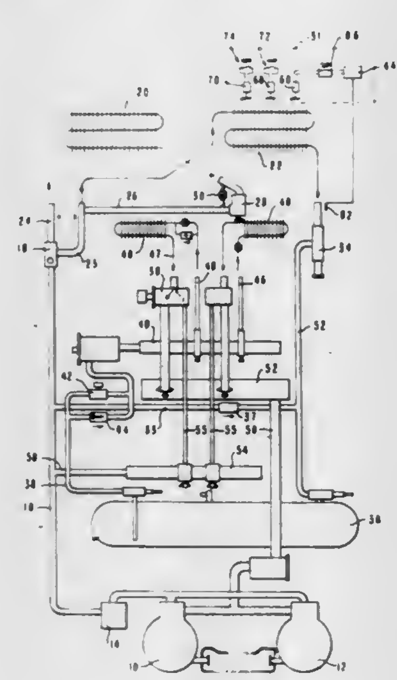

1. A method of operating a refrigeration system having compressor means, condenser means, receiver means and evaporator means and including the steps of:

compressing gaseous refrigerant to a relatively high compressor discharge temperature and relatively high compressor discharge pressure, the compressor discharge temperature being substantially above saturation temperature of the refrigerant at the compressor discharge pressure;

condensing the compressed gaseous refrigerant to a liquid, subcooling the liquid refrigerant to a preselected temperature level before such refrigerant leaves the condenser;

maintaining an operative system pressure within the receiver by the supply of gaseous refrigerant from the compressor;

evaporating the liquid refrigerant at a substantially lower pressure than the compressor discharge pressure; and

returning the evaporated refrigerant to the compressor.

4,373,349

HEAT PUMP SYSTEM ADAPTIVE DEFROST CONTROL SYSTEM

Dale A. Mueller, St. Paul, Minn., assignor to Honeywell Inc., Minneapolis, Minn.

Filed Jun. 30, 1981, Ser. No. 278,943

Int. Cl.[3] F25D *21/06*

U.S. Cl. 62—156 8 Claims

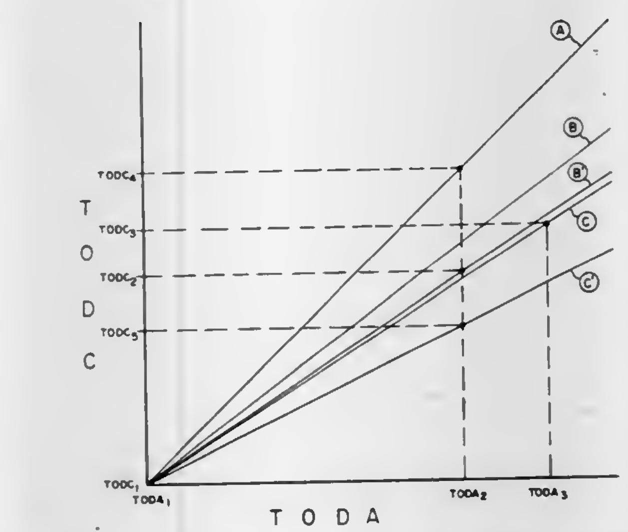

1. An outdoor coil defrost control system (hereinafter "defrost control system") for a reverse cycle refrigeration system (hereinafter "system") for heating and cooling a building wherein said system comprises refrigerant compression means, an indoor coil, an outdoor coil, and refrigerant conduit means connecting said compression means and said coils, said defrost control system comprising:

outdoor air temperature sensing means (hereinafter "TODAS") having an output indicative of outdoor air temperature (hereinafter "TODA");

outdoor coil temperature sensing means (hereinafter "TODCS") having an output indicative of the temperature of said outdoor coil (hereinafter "TODC");

enclosure temperature sensing means (hereinafter "STAT") having an output indicative of a demand for heating or cooling of the enclosure;

means (hereinafter "COM") operatively associated with said compression means and adapted to have an output indicative of the operation of said compression means; and

controller means having operative connections to said TODA, TODC, STAT, and COM so as to receive the outputs thereof, said controller being effective to place said system into an outdoor coil defrost mode of operation when all of the following four events have occurred:

(a) TODC is less than T_{PERMIT}, where T_{PERMIT} is a preselected value,

(b) COM output indicates operation of said compression means,

(c) COM output indicates said compression means has operated for a preselected minimum time, and

(d) TODC is equal to or less than N_1. TODA where N_1 is a preselected initial multiplier;

thereafter said controller being effective to place said system into a non-defrost mode of operation when defrost terminate conditions have occurred; and thereafter said controller being effective after each defrost operation to calculate a new value of N_1 based on the stabilized values of TODC and TODA for clear coil conditions whereby the defrost initiate control point is adjusted after each defrost operation.

4,373,350

HEAT PUMP CONTROL/DEFROST CIRCUIT

Joseph R. Noland, Louisville, Ky., assignor to General Electric Company, Louisville, Ky.

Filed Jul. 9, 1981, Ser. No. 282,352

Int. Cl.[3] F25D *21/06*

U.S. Cl. 62—156 2 Claims

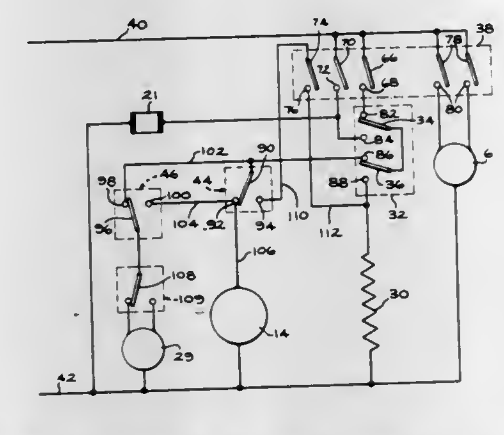

1. In a self-contained air conditioning unit for heating and cooling an enclosure, a refrigerant circuit including an outdoor heat exchanger and indoor heat exchanger, a compressor, a reversing valve for selectively connecting said compressor to said heat exchangers whereby said outdoor heat exchanger functions as an evaporator during operation of said unit on the heating cycle and said indoor heat exchanger functions as an evaporator during operation of said unit on the cooling cycle, fan means for moving enclosure air through said indoor heat exchanger, fan means for moving outdoor ambient air through said outdoor heat exchanger, an air conditioner heating cycle control system comprising:

a mode selection switch means for placing said air conditioning unit in said heating or cooling cycle;

a thermostat means having a first stage switching means operable for energizing said compressor in said heating cycle when the temperature of said enclosure is a predetermined comfort level, and a second stage switching means operable for de-energizing said compressor when the temperature of said enclosure drops to a second lower predetermined level during the operation of said compressor in said heating cycle;

a heating means arranged in the path of air through said indoor heat exchanger being energized by said second stage switching means when the temperature of said enclosure drops to the second lower preselected temperature;

a frost control means including a sensing element being exposed to the surface temperature of said outdoor heat exchanger, switch means under control of said sensing element movable between a first position for maintaining operation of said compressor in the heating cycle when said heat exchanger surface temperature sensed by said portions are above a preselected frost accumulation level and being movable to a second position for de-energizing said compressor when either of said sensing elements sense a preselected frost accumulation level to place said unit in a defrost mode and including circuit means operable when said frost control switch means is in the second position for energizing said heating means through said mode selection switch and said thermostat first stage switching means thereby energizing said heater at the start of said defrost mode to provide uninterrupted heating when said compressor is de-energized by said frost control means; and

a second control including a sensing element having one portion being exposed to said ambient outdoor temperature means under control of said sensing element for maintaining operation of said outdoor fan independent of said first control when the ambient sensed by said sensing element is above a frost accumulation temperature and to complete a circuit to said fan through said first control if said sensing element of said second control senses a preselected frosting temperature to de-energize said outdoor fan when said compressor is de-energized.

4,373,351

CONTROL APPARATUS FOR AN AIR CONDITIONING SYSTEM PROVIDING A PLURALITY OF ENERGY-SAVING MODES OF OPERATION

Custis L. Stamp, Jr., Tyler, Tex.; Rollie R. Herzog, Louisville, and Michael A. Brennan, Prospect, both of Ky., assignors to Trane CAC, Inc., La Crosse, Wis.

Filed Oct. 14, 1980, Ser. No. 196,414

Int. Cl.[3] F25B *13/00;* F23N *5/20*

U.S. Cl. 62—160 8 Claims

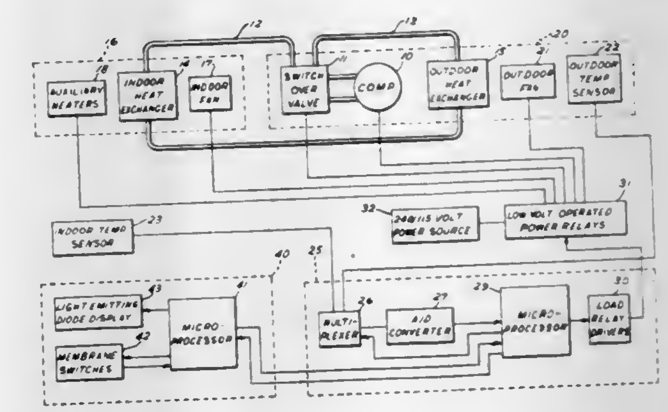

1. In an air conditioning system, control apparatus for automatically selecting and implementing, as a system set point operating temperature, a plurality of user-established temperature settings desired to be effective at different times of the day, said control apparatus comprising:

(a) clock means for supplying a signal representative of actual time of day;

(b) user-operated data input and storage means for establishing a plurality of desired time and temperature settings at which the system is to operate including,

(i) first means for establishing a primary temperature setting to be effective during a desired normal operating mode of the system,

(ii) second means for establishing at least two different energy saving time periods during which the system is to operate in energy saving operating modes,

(iii) third means for establishing a plurality of secondary temperature settings capable of being respectively different from each other to be effective during each of said energy saving time periods;

(c) mode control signal generation means responsive to said clock means and to said data input and storage means for establishing control signals representative of any energy saving time period extant at the time of day involved;

(d) temperature control signal generation means responsive to the data input and storage means and to the mode control signal generation means for establishing a system set point temperature control signal representative of said primary temperature setting when the time of day is outside said energy saving time periods and of one of said secondary temperature settings when the time of day is

within an energy saving time period corresponding thereto;

(e) and system functional operating control means responsive to the data input and storage means and to the temperature control signal generating means for operating the system to the system set point temperature indicated by said temperature control signal.

4,373,352

VARIABLE DISPLACEMENT COMPRESSOR

William T. Ladusaw, Louisville, Ky., assignor to General Electric Company, Louisville, Ky.

Filed Apr. 27, 1981, Ser. No. 258,188

Int. Cl.³ F25B *41/00;* F04B *49/02*

U.S. Cl. 62—196 C **11 Claims**

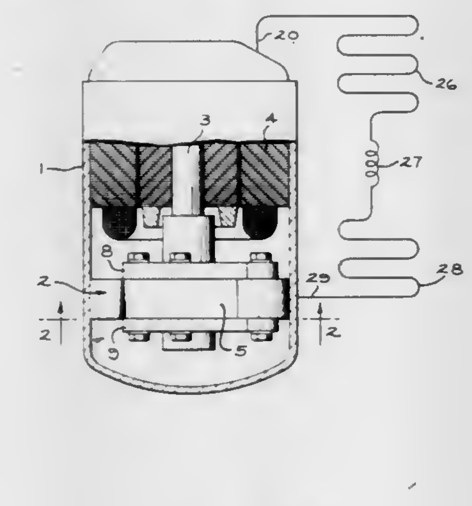

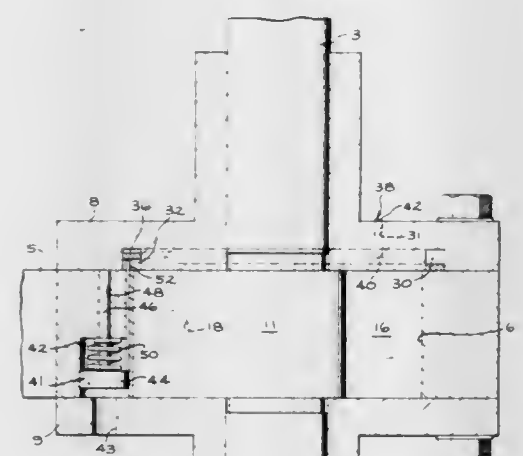

1. A hermetic rotary refrigerant compressor for use in a refrigeration system including refrigerant condensing means for condensing high pressure gaseous refrigerant from said compressor, an expansion device, and evaporator means wherein liquid refrigerant vaporizes and absorbs heat of evaporization comprising:

a hermetic casing adapted to contain a high pressure refrigerant gas;

a rotary compressor positioned in said casing and comprising means including a cylindrical wall member and upper and lower end plates forming the axial walls of an annular compression cylinder, spaced suction and discharge ports communicating with said cylinder;

means connecting said suction port to the evaporator;

means connecting said discharge port through a discharge valve to said casing;

a rotor extending axially between said plates being eccentrically rotatable within said cylinder with the peripheral surface of said rotor arranged to move progressively into sealing relation with successive portions of said cylindrical wall of said annular cylinder to divide said cylinder between a suction side and a compression side;

a motor having a shaft thereon for driving said rotor within said cylinder;

a radially disposed vane slidably maintained in a slot in said wall member between said ports being biased against said rotor to divide said cylinder into low and high pressure sides within said cylinder;

pressure relief means including channel means formed in one of said end plates, said channel being arranged and dimensioned so that a portion thereof is exposed to said cylinder to form a passageway on said low pressure side of said cylinder;

valve means including a valve in said channel and valve actuating means responsive to discharged refrigerant pressure in said casing being operable for moving said valve from a sealing position flush with the axial wall of said cylinder to an open position in said channel by a force varying with the difference in pressure between the suction and discharge pressures for allowing a portion of said refrigerant being compressed in said cylinder by said rotor to flow through said passageway from the compression side of the peripheral surface of said rotor to the suction side of the peripheral surface of said rotor when the pressure of refrigerant in said casing is greater than a predetermined pressure so that refrigerant pressure at said discharge port is maintained within said predetermined pressure.

4,373,353

REFRIGERANT CONTROL

Carmen J. Anzalone, Old Bridge, N.J., assignor to Fedders Corporation, Edison, N.J.

Filed Aug. 17, 1977, Ser. No. 825,218

Int. Cl.³ F25B *5/00, 41/04*

U.S. Cl. 62—200 **6 Claims**

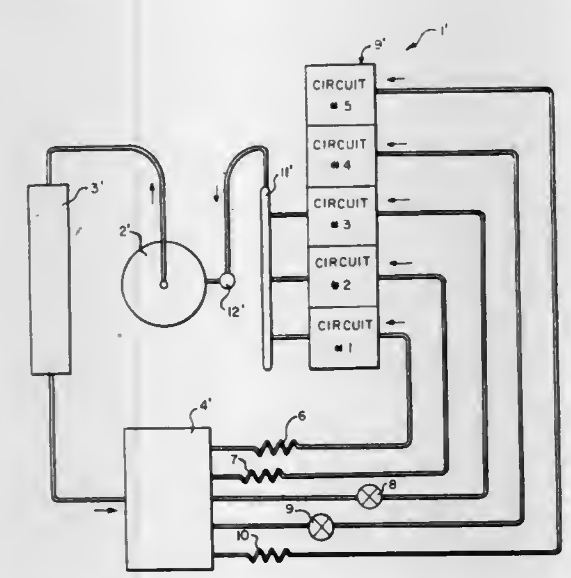

1. A refrigerant control system in combination with an air conditioner having a compressor with a high pressure output and a suction input, a condensor, and an evaporator, the control system being operable to reduce the capacity of the evaporator in response to a heavy load on the system, thereby to reduce the load on the compressor, the improvement comprising:

(a) said evaporator including:

a first evaporator coil circuit, and

a second evaporator coil circuit, said first circuit and said second circuit being independent of each other; and

(b) said control system including:

a distributor receiving liquid refrigerant from said condensor,

a first feed conduit having only one fluid control first means associated therewith which first control means consists of a first expansion device for the liquid refrigerant, operably connecting said first circuit to said distributor, said first expansion device being operable to impart to said first conduit a direct pressure-fluid flow characteristic whereby an increase in the pressure differential across said first conduit will normally result in an increase in fluid flow through said first conduit,

a second feed conduit operably connecting said second circuit to said distributor and having only one fluid flow control second means associated therewith which second control means consists of a second expansion device for the liquid refrigerant, said second expansion device being operable to impart to said second conduit an inverse pressure-fluid flow characteristic which, over a predetermined operating range, will result in a decrease in or substantially complete throttling of, any fluid flow through said second circuit with an increase in the pressure differential across said second conduit, thereby to make the system responsive to a heavy load by reducing the capacity of the evaporator, while sustaining a flow of liquid refrigerant through said first circuit.

4,373,354

COMBINATION DISCHARGE GAS MUFFLER AND WATER HEATER

George N. Sawyer, 14 Bayview, Rte. 2, Flint, Tex. 75762, assignor to Trane CAC, Inc., La Crosse, Wis.

Filed Sep. 28, 1981, Ser. No. 306,024

Int. Cl.³ F25B *27/02*

U.S. Cl. 62—238.6 **13 Claims**

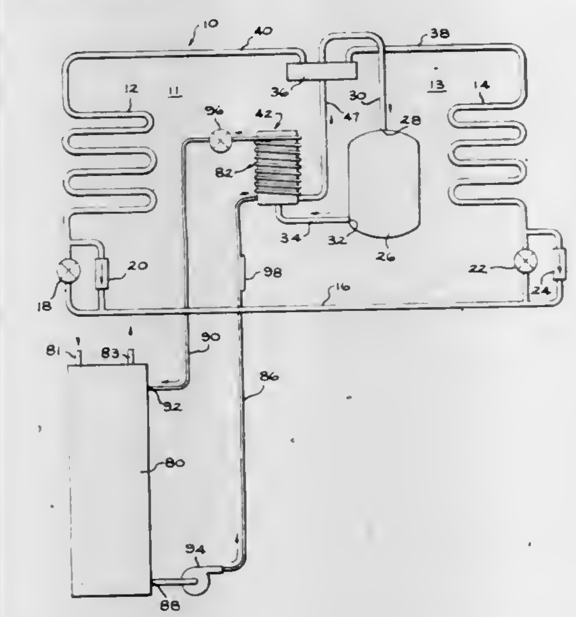

1. A muffler for a refrigeration system having heat exchange means being adapted to be connected to a water source, said refrigeration system including a compressor, a condenser for condensing hot gaseous refrigerant discharged from said compressor, an evaporator for evaporating said condensed refrigerant, said muffler comprising:

a cylindrical housing, a cap portion closing each end of said housing;

an inlet on said housing connected to the refrigerant system for receiving said hot gaseous refrigerant and an outlet arranging said housing in series flow in said refrigeration system;

a tubular casing arranged in said housing having its longitudinal wall spaced from the interior wall of said housing;

a cap on one end of said casing including an inlet, means connecting said inlet to said housing inlet for directing said hot gaseous refrigerant into said casing;

a cap on the other end of said casing including a plurality of outlet apertures for delivering said hot gaseous refrigerant to the interior of said housing;

a helical wall extending between the casing outer wall and housing interior wall to form a passage for said hot gaseous refrigerant between the outlet aperture of said casing and said housing inlet to return said hot gaseous refrigerant to said refrigerant system; and

a water passageway connected to said water source being arranged in heat exchange relationship with the outer surface of said housing being heated by said hot gaseous refrigerant to increase the temperature of said water as it flows through said water tube.

4,373,355

DUAL REFRIGERATED DISPLAY CABINET

John E. Monroe, Los Angeles, Calif., assignor to Displaymor Manufacturing Company, Inc., Los Angeles, Calif.

Filed Apr. 20, 1981, Ser. No. 255,561

Int. Cl.³ A47F *3/04*

U.S. Cl. 62—256 **4 Claims**

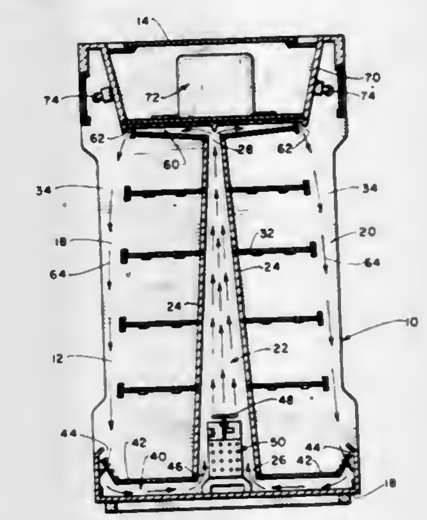

1. In a display case, the combination of: a housing having sidewalls and top and bottom walls for maintaining said sidewalls in spaced relationship with each other, said housing having open sides providing communication with first and second display areas at opposite sides of said housing; a common plenum chamber defined by said sidewalls and inclined walls located centrally of said housing and extending between said sidewalls; a lower passageway in communication with the lower extremity of said plenum chamber; an upper passageway in communication with the upper extremity of said plenum chamber is discharge refrigerated air downwardly across said display areas at the opposite sides of said display case; a refrigerated coil located in the flow path to said plenum chamber to refrigerate the air flowing into said plenum chamber; and a compressor located in said housing in communication with said refrigerated coil to introduce refrigerant into said refrigerated coil and cause chilling of the air passing through said coil into said plenum chamber.

4,373,356

LUBRICATION SYSTEM FOR ROTARY COMPRESSOR

Ralph F. Connor, Knight Township, Vanderburgh County, Ind., assignor to Whirlpool Corporation, Benton Harbor, Mich.

Filed Jul. 27, 1981, Ser. No. 287,412

Int. Cl.³ F25B *43/02*

U.S. Cl. 62—468 **20 Claims**

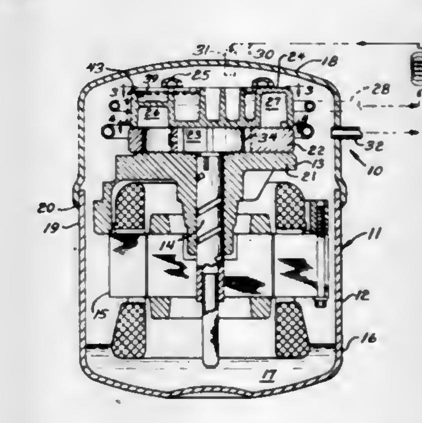

1. In a refrigerant compressor system including a housing, a rotary compressor apparatus within said housing and defining

a head, first discharge means for discharging compressed refrigerant/oil mixture from the compressor apparatus, and precooling means including a heat exchanger having an inlet connected to said first discharge means and an outlet connected to said housing to supply refrigerant/oil mixture thereinto for discharge of refrigerant vapor therefrom outwardly through a second discharge means, the improvement comprising:

means for directing the precooled refrigerant/oil mixture from said precooling means outlet into direct heat transfer association with said compressor head to cause evaporation of the refrigerant from said mixture.

4,373,357

CRYOGENIC COOLING APPARATUS

Norman H. Adams, Redditch, and David N. Campbell, King's Coughton, both of England, assignors to The Hymatic Engineering Company Limited, England

Filed Oct. 8, 1981, Ser. No. 309,830

Claims priority, application United Kingdom, Oct. 10, 1980, 8032822

Int. Cl.³ F25B *19/00*

U.S. Cl. 62—514 JT **8 Claims**

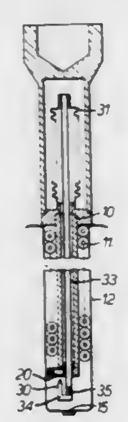

1. In a cryogenic cooling apparatus of the type including a substantially tubular heat exchanger, a Joule-Thompson nozzle and a container, said heat exchanger including a first path communicating with said nozzle through which, in use, refrigerant gas from a supply under pressure is supplied to said nozzle to liquify a portion of said gas in said container whereafter the low pressure gas is exhausted through a second path, said apparatus further including a valve member co-operating with said nozzle to vary its effective area to automatically vary the flow of said refrigerant gas and an operating member operatively connected to said valve member and to a movable wall, said movable wall being exposed on one side, in use, to the pressure of a sensing vapour which in operation is in equilibrium with liquid refrigerant;

the improvement comprising providing said operating member in the form of a combination operating member and sensing tube, said tube having a hollow interior, said interior communicating with the space containing said sensing vapour and extending down to the region of said nozzle whereby, in use, the heat extracted from the sensing vapour in said interior of said operating member is a function of the quantity of liquid refrigerant in contact with said operating member.

4,373,358

TORQUE LIMITING MECHANISM

Dean A. Pearch, Mt. Pleasant, and Thomas F. Pung, Sr., Weidman, both of Mich., assignors to Dana Corporation, Toledo, Ohio

Filed Dec. 29, 1980, Ser. No. 220,874

Int. Cl.³ F16D *7/02, 11/00*

U.S. Cl. 464—48 **14 Claims**

1. In a torque limiter of the type including a housing, at least one driven friction disc, one driver friction disc, and axially moveable biasing means for urging said discs together, an improvement comprising means for automatically arresting said biasing means at a predetermined limit of axial movement

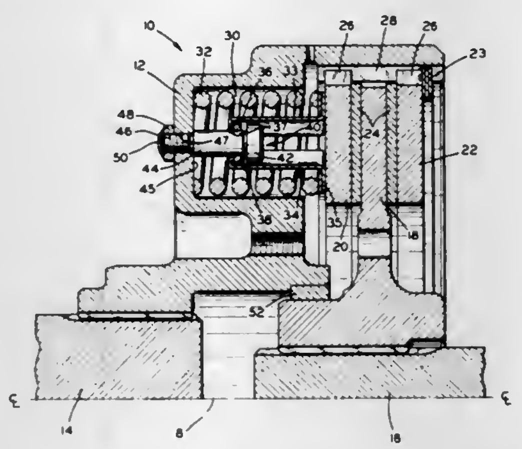

of said means, said biasing means comprising at least one spring positioned interjacent said housing and said friction discs.

4,373,359

HYDROSTATIC-MECHANICAL GEAR UNIT

Friedrich Ehrlinger, Friedrichshafen, and Michael Meyerle, Meckenbeuren, both of Fed. Rep. of Germany, assignors to Zahnradfabrik Friedrichshafen A.G., Friedrichshafen, Fed. Rep. of Germany

Filed May 8, 1980, Ser. No. 147,863

Claims priority, application Fed. Rep. of Germany, May 8, 1979, 2918448

Int. Cl.³ F16H *47/10, 37/08*

U.S. Cl. 74—687 **20 Claims**

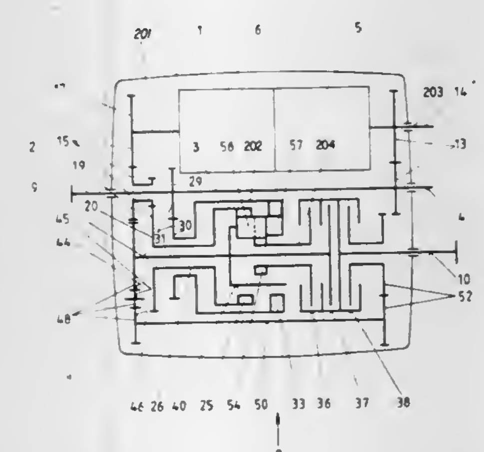

1. A hydrostatic-mechanical gear unit comprising an input shaft for receiving power from an engine, means for dividing power in the shaft into a hydraulic power branch and a mechanical power branch, the hydraulic power branch including a first hydrostatic unit operatively connected with a second hydrostatic unit, the input shaft being adapted to drive the first hydrostatic unit, and an output hydrostatic shaft adapted to be driven from the second hydrostatic unit, a planetary wheel set, gearing means for engaging the output hydrostatic shaft to transmit rotational power to said planetary wheel set, the mechanical power branch including gearing operatively engaging the input shaft and engaging the planetary wheel set, and adapted to impart rotational power to the planetary wheel set, the planetary wheel set being adapted to integrate the hydraulically activated rotation and the mechanically activated rotation, and intermediate shaft selectively driven by a first output means from the planetary wheel set, and coupling means for engaging the intermediate shaft and an output shaft and to thereby transmit rotational power to the output shaft when the gear unit is in a first driving stage, a coaxial shaft about the intermediate shaft and adapted to be selectively driven by a second output means from the planetary wheel set

when the gear unit is in a second driving stage, the coupling means disengaging the intermediate shaft from the output shaft and engaging the coaxial shaft with the output shaft to transmit power to the output shaft, the planetary wheel set and the coupling means being mounted on the same shaft, whereby at the transition between the first driving stage and second driving stage, the first and second output means of the planetary wheel set are at substantially the same rate of rotation.

4,373,360

DEVICE FOR CORRECTLY POSITIONING YARNS PRIOR TO KNITTING IN A CIRCULAR KNITTING MACHINE

Francesco Lonati, Brescia, Italy, assignor to Costruzioni Meccaniche Lonati S.p.A., Brescia, Italy

Filed Sep. 22, 1980, Ser. No. 189,240

Claims priority, application Italy, Oct. 1, 1979, 26156 A/79

Int. Cl.³ D04B *15/48, 15/60*

U.S. Cl. 66—131 **11 Claims**

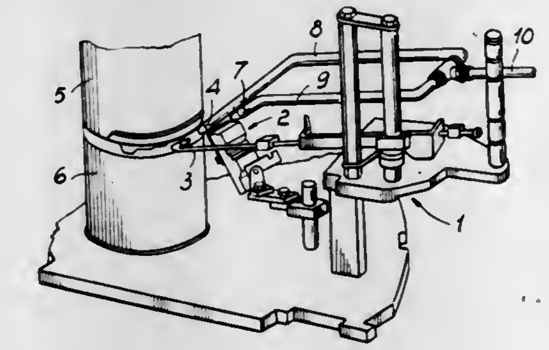

1. A device for correctly positioning yarns prior to knitting in a circular knitting machine, in particular a hose knitting machine, of the type comprising at least one needle cylinder, at least one striper unit having a plurality of yarn feeding fingers, a yarn cutting and gripping device and means for actuating said yarn feeding fingers and yarn cutting and gripping device according to a machine knitting program, the device comprising blowing nozzles respectively oriented towards said at least one needle cylinder and said yarn cutting and gripping device, at least one movably supported valve for admitting pressure fluid from a pressure fluid supply conduit to said nozzles, and control means for controlling said at least one valve, wherein said control means comprise at least one continuously rotatable control cam and means associated with said at least one valve for moving said at least one valve between a rest position and a position for operation in which said at least one control cam operates thereon to cause said at least one valve to provide communication between said supply conduit and said nozzles simultaneously with the actuation of any one of said yarn feeding fingers of said at least one striper unit.

4,373,361

SKI SOCK WITH INTEGRALLY KNIT THICKENED FABRIC AREAS

James L. Thorneburg, P.O. Box 5440, Statesville, N.C. 28677

Filed Apr. 13, 1981, Ser. No. 253,708

Int. Cl.³ A41B *11/00;* **D04B** *9/46*

U.S. Cl. 66—178 R **30 Claims**

1. A sock particularly adapted for wear with ski boots and the like and being adapted to cushion and protect the front portion of the leg from discomfort caused by the ski boot, said sock being knit throughout of at least one body yarn and including an integrally knit leg and foot, said leg and foot comprising a front half covering the front of the leg and the top of the foot of the wearer, and a rear half covering the rear of the leg, the heel, and the sole of the foot of the wearer, additional yarn knit in plated relationship with said body yarn in the front half of said leg and providing a thickened fabric area extending along the front of the leg of the wearer, areas adjacent opposite sides of said thickened fabric area in the front half of said leg being knit of said body yarn only, said thickened fabric area in said front half of said leg cushioning and protecting the front of the leg of the wearer, and said body yarn areas adjacent opposite sides of said thickened fabric area providing substantially

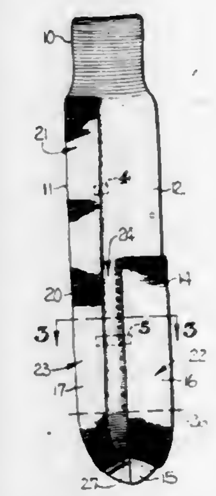

greater stretchability than the stretchability of said thickened fabric area so that the sock may be easily drawn on and removed from the foot and leg of the wearer and the sock will readily conform to the configuration of the leg of the wearer.

4,373,362

APPARATUS FOR THE CONTINUOUS WASHING OF LENGTHS OF TEXTILE MATERIAL

Hans Fleissner, Riehen, Switzerland, assignor to Vepa AG, Basel, Switzerland

Division of Ser. No. 17,277, Mar. 5, 1979, Pat. No. 4,247,294. This application Oct. 21, 1980, Ser. No. 199,307

Claims priority, application Fed. Rep. of Germany, Mar. 4, 1978, 2809433; Mar. 9, 1978, 2810162

Int. Cl.³ D06B *3/10*

U.S. Cl. 68—9 **23 Claims**

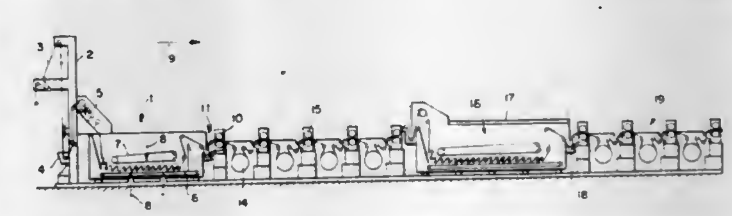

1. An apparatus for continuous washing of printed and dye-fixed, web-shaped textile material including woven or knit fabrics of natural and/or synthetic fibers which comprises feed means for depositing the textile material in folds into a dwell bath; conveying means arranged underneath the liquid level in said dwell bath for transporting the textile material in a folded condition from an inlet end through said bath to an outlet end of said bath, said conveying means including two spaced apart endless belts for continuously conveying the textile material in a folded condition between mutually parallel conveying surfaces provided by said belts, said conveying surfaces being disposed underneath the bath level and rotating in the same direction; means located at the outlet end of the bath above the liquid level for removing liquid and a film of dye material detachable from said textile material and for withdrawing the textile material from said dwell bath; and at least one washing bath unit having sieve drum means located within a washing bath for washing the textile material, said sieve drum means being subjected to forced throughflow of the washing liquid from the outside to the inside of the drum means; said means for depositing said textile material in folds including a slide means at the inlet end of the dwell bath for guiding said folds of textile material into a space between said two endless belts and said slide means being movable in a reciprocating fashion whereby the textile material is subjected to longitudinal com-

pacting and relief during transportation through said dwell bath between said two belts.

4,373,363
SKIN WASHER
Robert E. Edwards, Inverness; Donald H. McKee, Waukegan, and Claude D. Brown, Hanover Park, all of Ill., assignors to The Roy M. Moffitt Company, Schiller Park, Ill.
Filed Sep. 22, 1980, Ser. No. 189,056
Int. Cl.[3] C14C *1/00*
U.S. Cl. 69—28 **18 Claims**

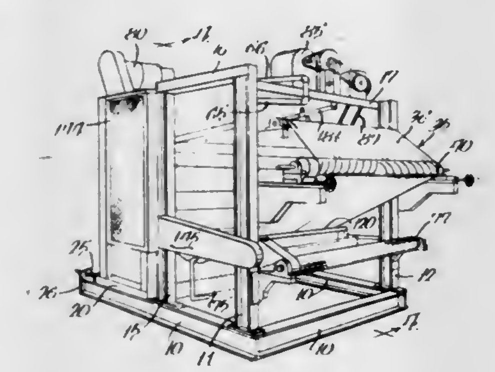

1. A skin washer comprising, a conveyor belt for conveying a skin to a washing station, a series of spaced-apart back-up members engaging one side of the conveyor belt at said washing station and defining a plane of support for the conveyor belt, and a pair of driven brush rollers at the opposite side of the conveyor belt and positioned opposite the spaces between the back-up members and across said plane of support to concavely deflect the conveyor belt and increase the arc of contact of said brush rollers with a skin supported on said opposite side of the conveyor belt.

4,373,364
METHOD OF CONTROLLING THE TEMPERATURE OF A HEATING FURNACE
Sunao Tanimoto, Tokyo; Shinya Tanifuji, and Yasuo Morooka, both of Hitachi, all of Japan, assignors to Hitachi, Ltd., Tokyo, Japan
Filed Nov. 25, 1980, Ser. No. 210,169
Claims priority, application Japan, Nov. 26, 1979, 54-152102
Int. Cl.[3] F27B *9/40*
U.S. Cl. 72—8 **10 Claims**

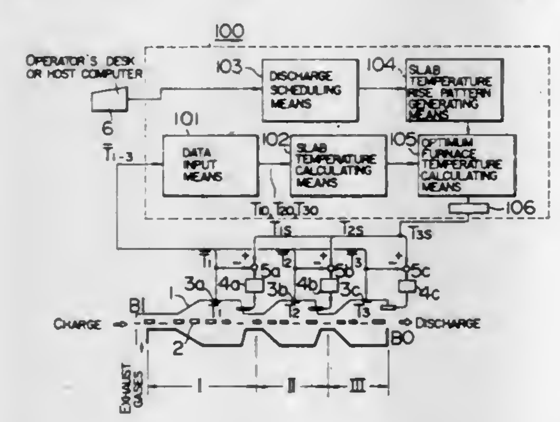

1. A temperature controlling method for heating, with a heating furnace having at least one heating zone provided with a controllable heating means, materials charged into said furnace such that said materials are heated up to an aimed temperature when they leave said furnace, said method comprising the steps of:

performing predictive calculation of a staying period of said material in the heating furnace when instructions for changing the operation condition of said heating furnace are detected;

calculating optimum slab temperature rise patterns for respective slabs with at least different staying periods in the heating furnace, along which patterns said materials are heated during the staying periods as obtained in said predictive calculation to attain aimed discharge temperatures and with which patterns a fuel consumption rate required for said heating becomes minimum by determining a minimum fuel flow rate for each zone as a function of furnace zone temperatures and furnace exhaust gas temperature;

computing zone temperatures which minimize deviations of slab temperatures in the respective zones after predetermined periods of time with respect to the optimum slab temperature rise patterns; and

controlling furnace temperatures with the computed zone temperatures as settings for the respective zones.

4,373,365
UP-SET SHRINKER FOR PRODUCING THICK WALL STEEL PIPE
Tadaaki Taira; Toshio Ishihara, and Junichiro Takehara, all of Fukuyama, Japan, assignors to Nippon Kokan Kabushiki Kaisha, Tokyo, Japan
Filed May 19, 1980, Ser. No. 151,470
Claims priority, application Japan, May 22, 1979, 54-62245
Int. Cl.[3] B21D *5/10*
U.S. Cl. 72—52 **7 Claims**

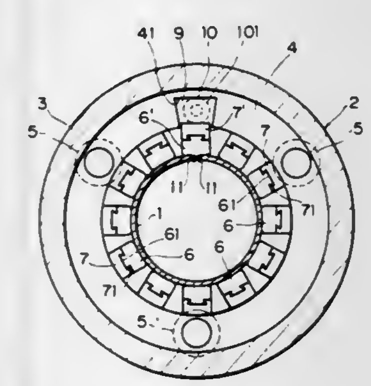

1. In an apparatus for producing thick wall steel pipe of generally O-shape, and having butting edges, and inner and outer surfaces, comprising:

an up-set shrinker having an outer cylinder (3) fixed to a base; an inner cylinder (4) disposed on an inner side of said outer cylinder (3); at least one reducing cylinder (5) coupled at least to said inner cylinder (4), said inner cylinder (4) being slidable axially of said outer cylinder (3) by means of said at least one reducing cylinder (5); said inner cylinder (4) having a guide groove (41) on one part of the inner surface thereof along its axial direction; a sliding block (9) mounted in said guide groove (41); an edge processing shrinker die (6') mounted to and held by said sliding block (9); and an edge processing cylinder (10) coupled to said sliding block (9), said sliding block (9) being slidable within said guide groove (41) by means of said edge processing cylinder (10);

the improvement wherein:

said inner cylinder (4) includes a plurality of taper segments (7) projecting from the inner surface of said inner cylinder centripetally thereof;

a plurality of reducing shrinker dies (6) for shaping parts of the O-shaped pipe other than edge butting portions of the O-shaped pipe, each reducing shrinker die (6) being slidably held by a respective one of said taper segments (7) via a mating dovetail (61) and a dovetail groove (71) and being non-rotatable;

a stopper member (161) is provided for restraining respective ends of said reducing shrinker dies (6);

said slidable block (9) includes a further taper segment (7') projecting inwardly centripetally thereof;

said edge processing shrinker die (6') being provided with a forming surface configured to bear against and shape outer surfaces of the edge butting portions of the O-shaped pipe, without being interposed between the butting edges of the O-shaped pipe, said edge processing shrinker die (6') being slidably mounted to said further taper segment (7') via a mating dovetail (61') and a dovetail groove (71') and being non-rotatable;

a further stopper member (16) for restraining an end of said edge processing shrinker die (6'); and

said forming surface of said edge processing shrinker die (6') having a surface which faces interior of said inner cylinder (4), and a cavity defined over the full length of said surface thereof which faces the interior of said inner cylinder (4), and a projecting area (63) on said cavity (62) and extending over the full length of said edge processing shrinker die (6');

said plurality of reducing shrinker dies (6) being displaceable centripetally of said inner cylinder (4) by sliding of said inner cylinder (4) in said outer cylinder (3) by means of said reducing cylinder (5), and said edge processing shrinker die (6') being displaceable centripetally within said guide groove (41) by sliding of said sliding block (9) by means of said edge processing cylinder (10); and

wherein no inner die is provided at least in the vicinity of said reducing shrinker dies (6) so that no contact is made to the inner surface of the generally O-shaped pipe-blank in the vicinity of said reducing shrinker dies, no inner die is provided opposite said edge processing shrinker die (6') so that no contact is made to the inner surface of the generally O-shaped pipe-blank in the vicinity of said edge processing shrinker die.

4,373,366
MACHINE FOR FORMING SPIRAL GROOVES IN METAL PIPE INNER SURFACE
Aritaka Tatsumi, Ibaraki, Japan, assignor to Hitachi Cable, Ltd., Tokyo, Japan
Filed Dec. 19, 1980, Ser. No. 218,152
Claims priority, application Japan, Feb. 19, 1980, 55-19448
Int. Cl.[3] B21B *17/08;* **B21C** *1/24*
U.S. Cl. 72—75 **12 Claims**

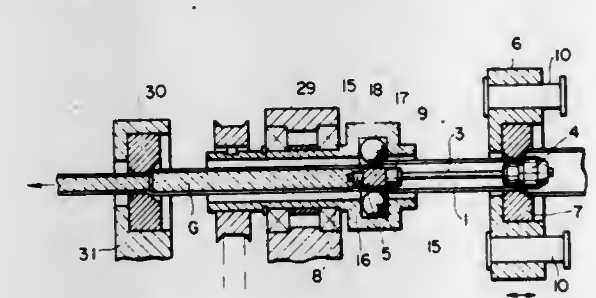

1. A machine for grooving an inner surface of a moving metal pipe comprising:

a tie rod insertable into said metal pipe;

a grooving plug rotatably mounted on a front end of said tie rod;

a floating plug fixedly secured to a rear end of said tie rod;

a rotary head;

a first die proposed at a position corresponding to a position of said floating plug, said first die being adapted to hold said grooving plug at a predetermined position in said rotary head;

said rotary head being disposed downstream of said first die;

a plurality of balls planetarily rotatably arranged in said rotary head to press a wall of said metal pipe against said grooving plug in said metal pipe so as to reduce a diameter of said metal pipe; and

a second die arranged downstream of said rotary head, for finishing said metal pipe thus processed.

4,373,367
ROLLER ENTRY GUIDES FOR ROD MILLS
Mario Fabris, 8 Roberts Rd., Grimsby, Ontario, Canada (L3M 3X2)
Continuation-in-part of Ser. No. 80,820, Oct. 1, 1979, Pat. No. 4,295,356. This application Nov. 17, 1980, Ser. No. 207,317
Int. Cl.[3] B21B *39/16*
U.S. Cl. 72—250 **7 Claims**

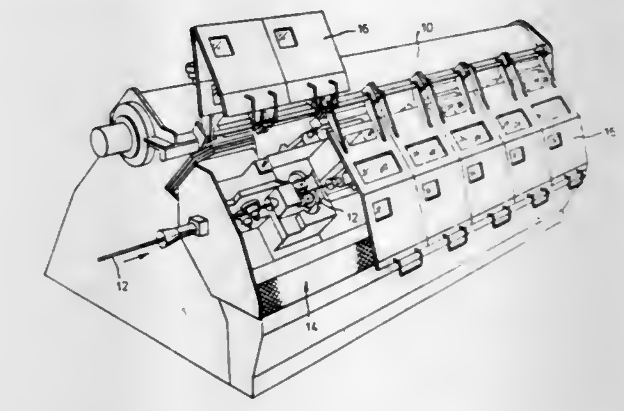

1. A roller entry guide for a rod mill comprising:

a body providing a rod passage therein through which the rod passes;

a pair of rocker arm members mounted by the body on opposite sides of the rod passage for pivoting rocking movement about respective parallel pivot axes;

a pair of guide roller members each mounted by the respective rocker arm member for rotation about a respective rotation axis, the pivoting rocking movement of the arm members permitting movement of the guide roller members toward and away from one another;

each guide roller member having a ring of fluid reaction members coaxial with its axis of rotation;

means disposed to direct a stream of fluid at the said ring of fluid reaction members to rotate the respective guide roller member about its axis of rotation; said means comprising a U-shaped bracket secured to said body through arms thereof and having the plane containing said arms perpendicular to a plane containing the rocker arms, a bore being provided in at least one of said arms and having an inlet to receive pressurised fluid and an outlet to direct a stream of fluid at said ring of fluid reaction members, and

means for feeding fluid to the said inlet whereby the guide roller members can be rotated at about their operative speeds prior to engagement by a rod passing through the device by impingement of fluid with said fluid reaction members.

4,373,368
HYDRAULIC ASSIST STRIPPING
Hendrik G. Heijting, Deventer, Netherlands, assignor to Thomassen & Drijver-Verblifa NV, Deventer, Netherlands
Filed Jun. 29, 1981, Ser. No. 278,783
Int. Cl.[3] B71D *45/00*
U.S. Cl. 72—344 **9 Claims**

1. A method of forming a cylindrical wall-ironed sleeve having a bottom and a radially inwardly enlarged wall thickness at an end remote from said bottom with there being an internally tapered transition region between a normal wall thickness and the enlarged wall thickness, said method including the forming of the sleeve on a mandrel with said enlarged wall thickness being interlocked with said mandrel; the step of introducing a fluid under pressure through the mandrel be-

tween the mandrel and the sleeve at the transition region of the sleeve to momentarily radially enlarge the end of the sleeve

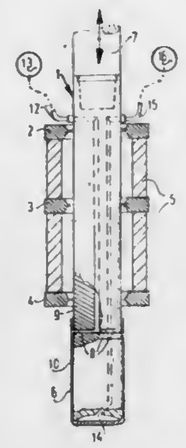

remote from the bottom and release the interlock between the sleeve and the mandrel.

4,373,369
METHOD OF FORMING INTEGRAL FLANGES IN A SHEET
John A. Schey, Waterloo, Canada, assignor to Modine Manufacturing Company, Racine, Wis.
Filed Mar. 27, 1980, Ser. No. 134,513
Int. Cl.³ B21D *22/00*
U.S. Cl. 72—347 **10 Claims**

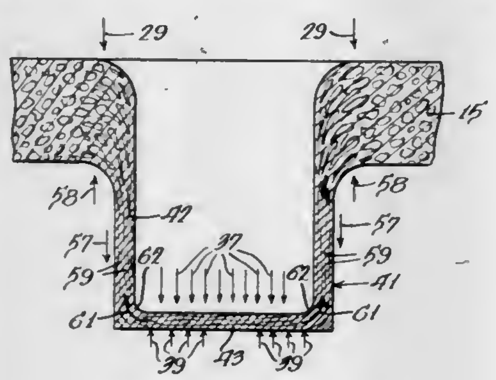

1. A method of forming an integral depression in a plastically deformable metal sheet comprising:
retaining said sheet against substantial movement around the area of the intended depression;
and exerting localized pressure on one side of said sheet over the area of said depression while simultaneously resisting said deformation by applying a yielding counterpressure on the opposite side of said sheet over the external area of said depression maintaining the sheet material in material flowing compression during the formation of said depression and thereby bringing the sheet material into a state of plastic flow in the area of said depression, said depression thereupon comprising a heavily deformed side wall and integral base of said sheet material.

4,373,370
PRESS TRANSFER BAR
Robert J. Allen, Daly City; Edward W. Blake, Orinda, both of Calif.; Manjeshwar S. Rao, Hoffman Estates, Ill., and Kurt L. Hahn, San Rafael, Calif., assignors to American Can Company, Greenwich, Conn.
Filed Jul. 11, 1979, Ser. No. 56,704
Int. Cl.³ B21D *72/00*
U.S. Cl. 72—349 **9 Claims**

1. A mechanism for periodically moving objects from one place to another including:
(a) a first oscillating means mounted for movement to and fro in a plane and having a first drive mechanism associated therewith for a first controlled periodic input movement to said first oscillating means;
(b) a second oscillating means carried on said first means for reciprocal movements relative thereto in substantially the same plane and direction and having a second drive having relative movement to and associated with said first drive mechanism and cooperatively connected to said second means for establishing a second periodic input movement relative to said first means;

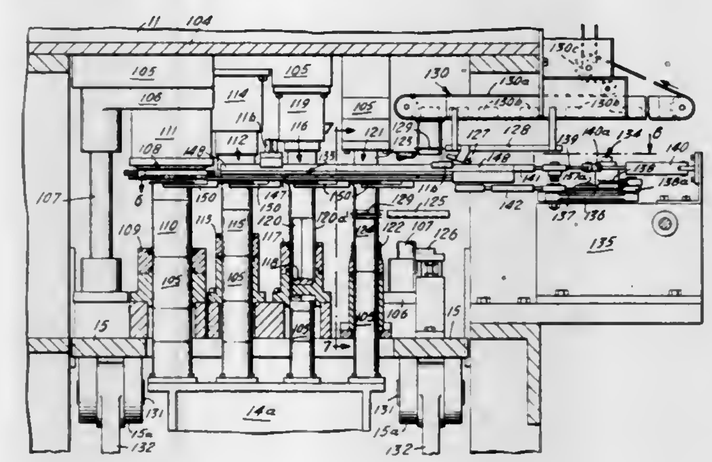

(c) an opposed pair of intermediate means supported to reciprocate with said first periodic input movement of said first means and carried for pivotal movement toward and away from one another each about a fixed pivot axis carried on and normal to said first oscillating means, said intermediate means being interconnected for activation by said second means in timed periodic relation to the reciprocation of said first means.

4,373,371
METHOD OF REDUCING SPRINGBACK IN MECHANICALLY PRESSED SHEET MATERIALS-I
You C. Liu, Bloomfield Hills, Mich., assignor to Ford Motor Company, Dearborn, Mich.
Filed Dec. 29, 1980, Ser. No. 220,348
Int. Cl.³ B21D *5/01*
U.S. Cl. 72—379 **13 Claims**

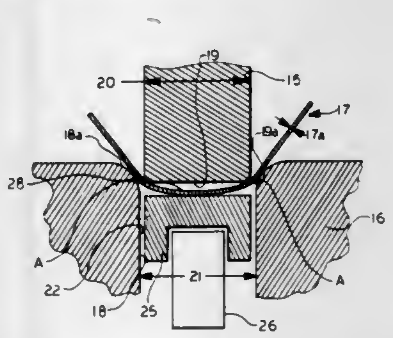

1. A method of bending sheet material by use of complimentary male punch and female molding members, said female molding member having a counterpad controllably movable to resist movement of the male punch member in said female molding member; the method comprising:
(a) striking said members together through a first increment with said sheet material therebetween to firstly bend said sheet metal at a first pair of bend loci spaced apart a predetermined distance, said counterpad permitting elastic strain to shape the sheet metal between said first bend loci as a curvilinear section;
(b) striking said members together through a second increment with said firstly bend sheet metal therebetween, said counterpad being controlled to cooperate with said male punch member to flatten said curvilinear section so that said members bend said sheet metal at a pair of second bend loci spaced differently than said first pair of bend loci.

4,373,372
APPARATUS FOR ASSEMBLING ELECTRICAL CABLES TO ELECTRICAL CONNECTORS
Harley R. Holt, Forest Park, Ill., assignor to Bunker Ramo Corporation, Oak Brook, Ill.
Filed Jul. 14, 1980, Ser. No. 167,945
Int. Cl.³ B21K *25/00*
U.S. Cl. 72—406 **17 Claims**

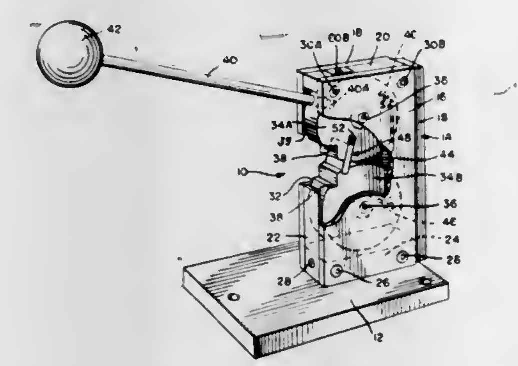

1. Apparatus for assembling electrical cables, or the like, to an electrical connector which has cable clamp means for clamping a cable in position with its conductors terminated to contact means on the connector, comprising:
a base;
a pair of opposed jaw members rotatably mounted on said base for movement about generally parallel, spaced axes of rotation toward and away from a connector to engage said cable clamp means for clamping a cable to provide strain relief therefor;
actuator means for rotating said jaw members; and
direct drive link means interconnecting said jaw members for conjoint rotation thereof in opposite directions toward and away from said cable clamp means in response to movement of said actuator means, said direct drive link means comprising a slidable plate extending between said jaw members in driving relationship therewith.

4,373,373
AUTOMOBILE BODY REPAIR
William J. Schaefer, 3706 Jay La. South, Rolling Meadows, Ill. 60008
Filed Feb. 28, 1980, Ser. No. 125,332
Int. Cl.³ B21D *37/02*
U.S. Cl. 72—413 **5 Claims**

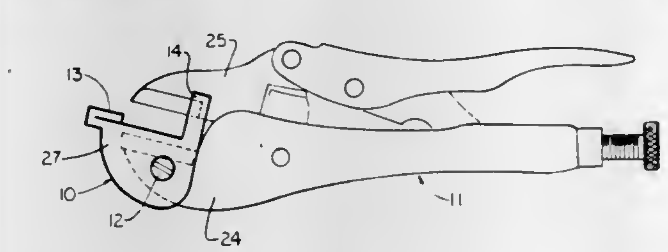

1. A device for forming an offset shoulder and depressed parallel edge along the outside perimeter of a hole in the sheet metal of an automobile body, said device being adapted for use with a standard compound acting adjustable vise type of hand pliers, having a first upper pan and a second lower jaw, comprising:
jaw lug means constructed as part of said device, said jawing means being positioned on the upper jaw of the said hand pliers,
attaching means securing the said jaw lug means to the said upper jaw of the said hand pliers,
work stop means located to allow the formation of said offset shoulder and edge in said piece of sheet metal, in an evenly contoured shape at a predetermined distance from said edge,
said attachment means including adjustment means wherein the formation of said offset shoulder and edge in said piece of sheet metal can be adjusted to have a longer or shorter offset radius according to the needs of a workman.

4,373,374
ARRANGEMENT FOR MEASURING THE AMOUNT OF GAS ENCLOSED IN A LIQUID
Jean Bajard, Truchtersheim, France, assignor to Societe Alsacienne de Services Industriels, Gambsheim, France
Filed Oct. 23, 1980, Ser. No. 199,913
Claims priority, application France, Oct. 26, 1979, 79 27108
Int. Cl.³ G01N *7/14*
U.S. Cl. 73—19 **8 Claims**

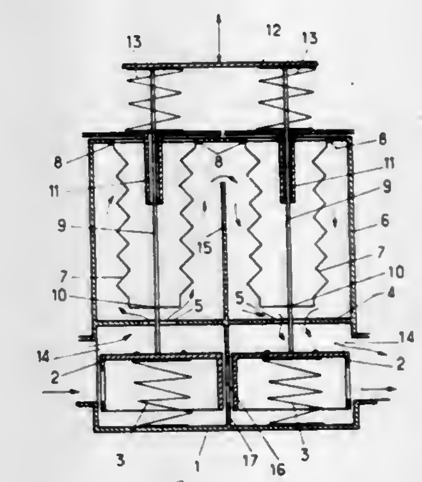

1. An arrangement for automatically measuring the amount of gas in a liquid, and especially the carbonic gas in beverages such as beer, mineral water, sodas, fruit juice, or the like, the arrangement comprising a bypass having an inlet and an outlet and being adapted to be connected into a loop communicating at opposite ends with a main conduit for the liquid; a measuring chamber destined to enclose a sample of the liquid and communicating with said bypass; closure members movable in said bypass between a first position for directing liquid passing through said inlet to flow through said measuring chamber to said outlet while preventing a direct communication between said inlet and said outlet and a second position preventing communication between said bypass and said measuring chamber, so that liquid passing through said inlet will flow directly to said outlet while enclosing a sample of the liquid in said measuring chamber;
a deformable body extending into said measuring chamber for changing the volume of the latter when communication between said measuring chamber and said bypass is prevented for creating in said measuring chamber the necessary condition for measuring the gas content in the liquid; and a single control member operatively connected to said closure members and to said deformable body so that said single control member ensures successively displacement of said movable closure members between said first and second positions and control of said deformable body to modify the volume of the measuring chamber, and vice versa.

4,373,375
HYDROGEN SENSOR
James H. Terhune; John P. Sturtz, and John P. Neissel, all of San Jose, Calif., assignors to General Electric Company, San Jose, Calif.
Filed Dec. 19, 1980, Ser. No. 218,495
Int. Cl.³ G01N *23/10, 27/66*
U.S. Cl. 73—19 **28 Claims**

1. A hydrogen sensor comprising: a sealed and evacuated chamber; a first window in said chamber formed of a material selectively permeable to hydrogen to admit hydrogen from an adjacent atmosphere into said chamber; a source of alpha particles in said chamber for ionizing the hydrogen therein; a

second window in said chamber formed of a material selectively permeable to helium, said second window providing an outlet from said chamber for helium formed by combination of alpha particles and electrons in said chamber; and a pair of

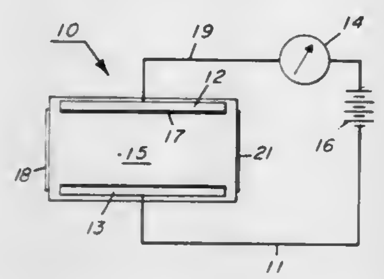

spaced electrodes in said chamber connected to a source of voltage for collecting electrons in said chamber, the resulting electron current being indicative of the concentration of hydrogen in said chamber.

4,373,376
METHOD AND APPARATUS FOR DIAGNOSING OVERHEATING OF AN ELECTRIC MACHINE
Kiyoshi Narato, Ibaraki; Keizo Ohtsuka, and Sadahiko Niwa, both of Hitachi, all of Japan, assignors to Hitachi, Ltd., Tokyo, Japan
Filed Sep. 17, 1980, Ser. No. 188,096
Claims priority, application Japan, Sep. 17, 1979, 54/117846
Int. Cl.^{3} G01N *31/08*
U.S. Cl. 73—23.1 13 Claims

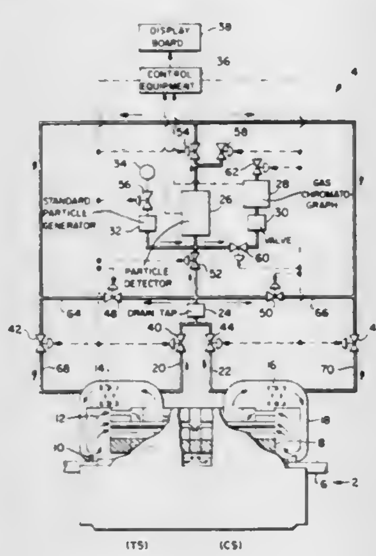

1. An overheat diagnosing apparatus for a gas-cooled type electric machine having at least some regions coated with an organic insulating material which decomposes when subjected to high temperatures, the apparatus comprising:
means for selectively extracting a coolant gas from at least one region of an interior space of the electric machine;
means for detecting a density of the decomposed organic insulating material in the selectively extracted coolant gas and for enabling a selection of an overheat region when the density of the decomposed organic insulating material in the coolant gas in the selected region is higher than a predetermined level;
means for analyzing a composition of the decomposed organic insulating material in the coolant gas from a selected overheat region and for enabling a determination of an overheat position in the selected overheat region; and
means for controlling said extracting means, said detecting means, and said analyzing means so that the coolant gas in the selected overheat region is introduced into said analyzing means.

4,373,377
UNIVERSAL TAIL PIPE CONNECTOR
Harvey A. Smith, Hampden, Mass., and Joseph T. Fleming, East Granby, Conn., assignors to United Technologies Corporation, Hartford, Conn.
Filed Oct. 27, 1980, Ser. No. 200,796
Int. Cl.^{3} G01N *31/00;* F16L *17/00*
U.S. Cl. 73—23 5 Claims

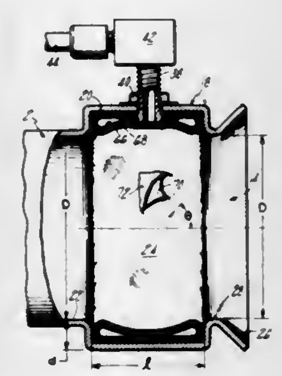

1. Apparatus for connecting exhaust emissions equipment to combustion engine exhaust pipes of varying diameter, in a system having a source of positive pressure signals and a source of vacuum pressure signals, comprising:
a hollow cylindrical housing having longitudinally spaced inlet and outlet ports for connecting to the exhaust pipe and emissions equipment respectively, said inlet port and said housing having internal diameters equal to or greater than the largest diameter exhaust pipe, said housing including an annular collar for providing therein an internal annular groove adjacent said inlet port;
three-way valve means, having first and second input apertures connected to the sources of positive pressure and negative pressure signals respectively, and having an output aperture, said valve means including switch means responsive to operator control for connecting, alternately, each input aperture to said output aperture; and
an inflatable seal, including an inflatable annular bladder of high temperature silicone rubber secured in said internal annular groove in axial registration within said housing by a pneumatic stem assembly adapted to engage said annular collar, said bladder being connected through said stem to said output aperture of said three-way valve for responding, alternately in dependence on operator control, to said positive pressure and vacuum pressure signals, said bladder retracting in response to applied vacuum pressure signals and nestling along a mating surface thereof within said internal annular groove so as to allow unobstructed internal passage of the exhaust pipe within said housing, said bladder inflating in response to applied positive pressure signals to provide a positive pressure seal between a sealing surface thereof and the outer surface contour of the inserted exhaust pipe.

4,373,378
VIBRATION SENSOR FOR AN AUTOMOTIVE VEHICLE
Takeshi Fujishiro, Yokosuka; Kiyoshi Takeuchi, Yokohama, and Toru Kita, Yokosuka, all of Japan, assignors to Nissan Motor Company, Limited, Yokohama, Japan
Filed Oct. 30, 1980, Ser. No. 202,271
Claims priority, application Japan, Nov. 6, 1979, 54-143736
Int. Cl.^{3} G01L *23/22*
U.S. Cl. 73—35 13 Claims

1. A vibration sensor which comprises:
(a) a housing having a hollow cavity;
(b) a plurality of piezoelectric vibration elements free to vibrate within the hollow cavity of said housing, the resonant frequencies of said vibration elements being selected to be relatively close to each other, said vibration elements being arranged to generate a piezoelectric sensor signal such that the respective piezoelectric voltages from said vibration elements are synthesized in the same polarity when engine knocking frequency lies between the two resonant frequencies of said vibration elements and are synthesized in the reverse polarity when engine knocking frequency lies below the lower resonant frequency or lies

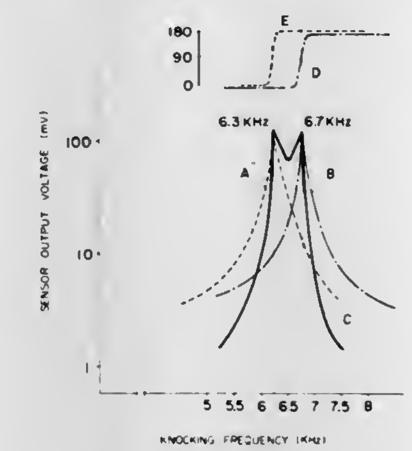

above the higher resonant frequency of said vibration elements; and
(c) conducting means for conducting the piezoelectric signal in response to the vibration of said piezoelectric elements, whereby a multi-peak vibration response characteristic is obtained.

4,373,379
METHOD AND APPARATUS FOR DETECTING DEFECTS IN A WATER COOLING SYSTEM OF A HYDROGEN-COOLED DYNAMIC ELECTRIC MACHINE
Sanshiro Obara, and Ikuro Miyashita, both of Hitachi, Japan, assignors to Hitachi, Ltd., Tokyo, Japan
Filed Nov. 25, 1980, Ser. No. 210,170
Claims priority, application Japan, Nov. 26, 1979, 54/151971
Int. Cl.^{3} G01M *3/22*
U.S. Cl. 73—40.5 R 10 Claims

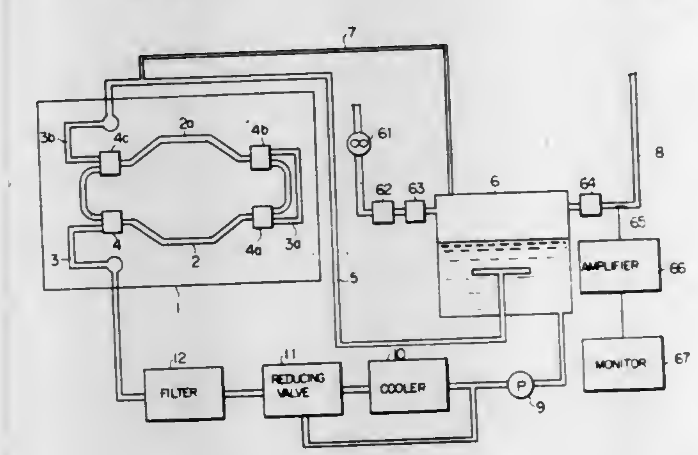

1. A method of detecting defects in a water cooling system which is arranged for circularly supplying a cooling water into a hydrogen cooled electrical machine having a water cooling passage therein, said water cooling system including a water supply tank having a top wall with which said water supply tank defines above a pool of the cooling water therein an upper space communicating with the atmosphere through an air pipe, and means for supplying the cooling water from said water supply tank to said water cooling passage in said hydrogen cooled electrical machine, comprising the steps of
i. blowing a carrier air at a predetermined constant flow rate to said upper space of said water supply tank so as to drive hydrogen gas accumulated in said upper space through said air pipe;
ii. measuring hydrogen gas concentration in said carrier air flowing through said air pipe; and
iii. judging whether any defect develops in said water cooling system or not, from the concentration measured.

4,373,380
TEST TOOL FOR SUB-SEA WELL HEAD HOUSINGS AND METHOD OF TESTING
John H. Mayo, 404 Alonda Dr., Lafayette, La. 70503
Filed Dec. 9, 1980, Ser. No. 214,674
Int. Cl.^{3} G01M *3/28*
U.S. Cl. 73—40.5 R 11 Claims

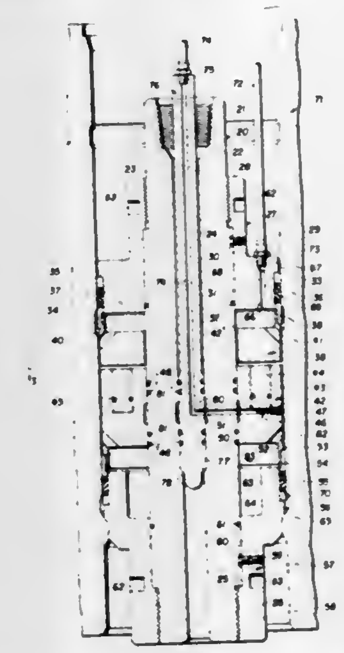

1. A method of testing a sealing surface to determine the degree of sealability of the surface, comprising pressure activating a seal in contact with said surface under a selected degree of activating pressure and maintaining the activating pressure constant for an interval, applying a test pressure to said surface and seal at a level of pressure above said activating pressure sufficient to cause leakage of fluid between said surface and seal, holding the test pressure constant for an interval while allowing a condition of pressure equilibrium between said activating and test pressures to occur evidenced by the stopping of leakage between said surface and seal, and recording the equilibrium pressure to establish the degree of sealability of said surface.

4,373,381
MANHOLE LEAKAGE INDICATOR AND METHOD FOR USING
Leon Kulp, 426 Bridge St., Catasauqua, Pa. 18032, and Donald E. Noggle, 102K Village Round, Wescosville, Pa. 18106
Filed Jan. 29, 1981, Ser. No. 229,337
Int. Cl.^{3} G01M *3/28*
U.S. Cl. 73—40.5 R 5 Claims

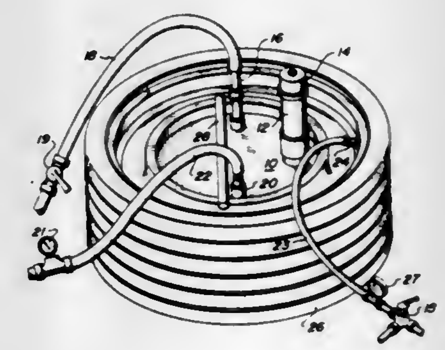

1. An apparatus for testing leakage from manholes comprising:
(a) a generally circular rim of rigid construction
(b) an inflatable bag circumscribing said rim, said rim and bag resting on
(c) a generally circular bottom plate to form an assembly, said assembly having a radius of somewhat less than the manhole to be tested;

(d) gas inlet means connected to said bag to allow its inflation and deflation;
(e) gas inlet means extending longitudinally through said assembly to allow the introduction of a gas into said manhole after said assembly is in place;
(f) means associated with said assembly adapted to receive a gauge intended to measure gas pressure of the manhole;
(g) a duct extending longitudinally through said assembly from the rim side to the bottom plate side;
(h) cap means for said duct at the rim side; and,
(i) means within said duct for releasably securing a cable to a wall of said duct whereby a cable may be secured at one end to said assembly and at its other end to a wall of said manhole.

4,373,382
METHOD OF ASCERTAINING THE HYDRATING ACTION OF A PRODUCT TO BE APPLIED TO THE SKIN
Nicole A. A. Brun, Geneva, Switzerland, assignor to Labiol S.A., Switzerland
Filed May 1, 1981, Ser. No. 259,669
Claims priority, application Switzerland, Jul. 9, 1980, 5242/80
Int. Cl.^{3} G01N *33/15, 13/00*
U.S. Cl. 73—53 **5 Claims**

1. Method of ascertaining the hydrating effect of a product to be applied on the skin, which comprises the steps of applying the product to be tested on at least one portion of at least one first sample of a vegetable, storing this first sample and at least another sample of the same vegetable but untreated under the same storage conditions, and finally comparing the evolution of the surface condition of the first and second samples.

4,373,383
DEVICE FOR BURNOFF OF A MEASURING RESISTOR
Günther Plapp, Filderstadt, and Peter Romann, Stuttgart, both of Fed. Rep. of Germany, assignors to Robert Bosch GmbH, Stuttgart, Fed. Rep. of Germany
Filed May 21, 1980, Ser. No. 151,843
Claims priority, application Fed. Rep. of Germany, Jul. 6, 1979, 2927378
Int. Cl.^{3} G01F *1/68*
U.S. Cl. 73—118 **13 Claims**

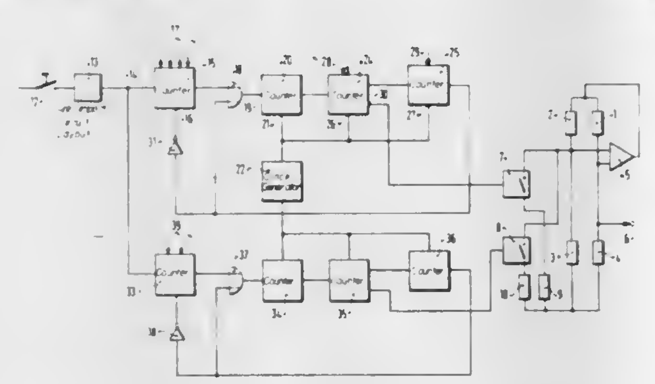

1. A device for burnoff of a measuring resistor, in particular a hot wire or hot film in the air flow rate meter of an internal combustion engine comprising:
an open-loop control device coupled with a trigger circuit which emits a repeating output signal in response to the appearance of predetermined operational characteristics, said open-loop control device increasing the flow of electrical current through said resistor during the burnoff procedure.

4,373,384
DIESEL ENGINE TIMING APPARATUS
Gene E. Olson, Kenosha, Wis.; Jerome A. Thompson, Milford, Mich.; Donald D. Grover, Kenosha, Wis.; Christopher B. Stout, Kenosha, Wis.; Thomas P. Becker, Kenosha, Wis., and Glenn A. Kaufman, Kenosha, Wis., assignors to Snap-on Tools Corporation, Kenosha, Wis.
Filed Jul. 23, 1981, Ser. No. 286,186
Int. Cl.^{3} G01M *15/00*
U.S. Cl. 73—119 A **11 Claims**

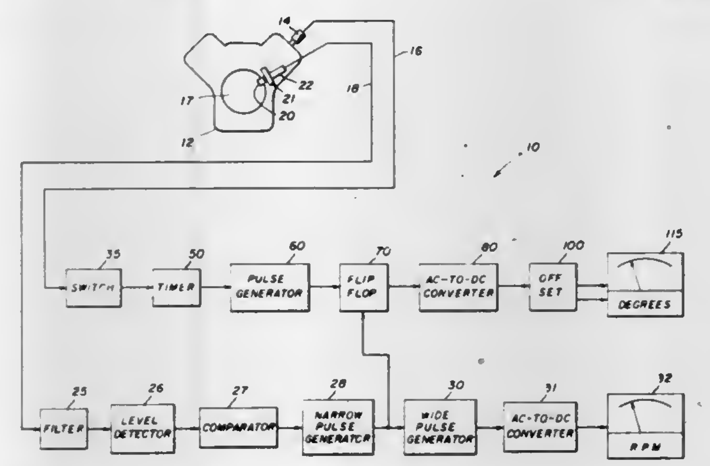

1. Diesel engine timing apparatus for a diesel engine having a rotating part with mark means that passes a fixed point a predetermined number of degrees after top dead center of a selected cylinder, said diesel engine timing apparatus comprising a luminosity probe adapted to be coupled to the selected cylinder for producing a first recurring electrical signal in response to the recurring light produced in the selected cylinder during combustion therein, timer means for producing a recurring timer signal commencing with the electrical signal but having a substantially greater duration, a first pulse generator responsive to the leading edge of the timer signal for producing a train of first pulses each having a duration substantially shorter than the duration of the timer signal, means adjacent to the fixed point for producing a second recurring electrical signal in response to the rotating mark means, a second pulse generator responsive to the leading edge of the second recurring electrical signal for producing a train of second pulses, circuit means coupled to said first and second pulse generators and being responsive to each first pulse to start an output pulse and being responsive to each second pulse to terminate the output pulse, and means for displaying information corresponding to the duration of the output pulses.

4,373,385
FLUID PRESSURE DETECTION
Raymond Boutteville, Bois D'Arcy, and Thierry Febvret, Versailles, both of France, assignors to Intertechnique, Plaisir, France
Filed Feb. 20, 1981, Ser. No. 236,555
Claims priority, application France, Feb. 27, 1980, 80 04381
Int. Cl.^{3} B60C *23/04;* **G01L** *9/10*
U.S. Cl. 73—146.5 **7 Claims**

1. A fluid pressure detector comprising
a housing having an axis,
transmission shaft means mounted for rotation about said axis and retained against axial movement, having an end portion projecting out of said housing for mechanical connection with a rotatable member in which the pressure is to be detected,
a unit slidably non-rotatably connected to said rotatable shaft,
deformable wall means coaxial to said shaft means and cooperating with a surface of said unit to define a pressure chamber, said surface being constructed for the pressure in said chamber to exert a resultant axial pressure force on said unit,

passage means in said shaft means opening into said projecting end portion and into said chamber,
resilient return means operatively connecting said unit and shaft and exerting an axial force on said unit,
a differential transformer carried by said housing and having excitating and receiving coil means,

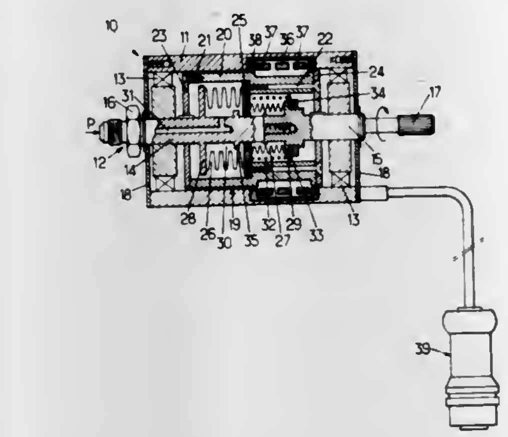

and a ferromagnetic body carried by said unit arranged to provide a coupling effect between said coil means which varies in dependence on the axial location of said unit along said shaft.

4,373,386
DIRECTION SENSITIVE FLOW VELOCITY METER AND SENSING PLATE TO BE USED ON IT
Jacob P. Schuddemat, Huizen, and Johan H. Huijsing, Den Hoorn, both of Netherlands, assignors to Brooks Instrument B.V., Veenendaal, Netherlands
Filed Jul. 3, 1980, Ser. No. 165,608
Claims priority, application Netherlands, Jul. 9, 1979, 7905356
Int. Cl.^{3} G01F *1/68;* **G01P** *5/10*
U.S. Cl. 73—189 **8 Claims**

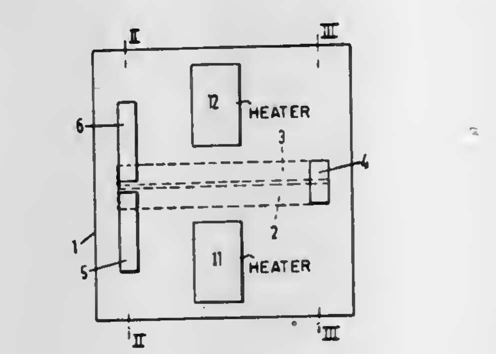

1. In a direction sensitive flow velocity meter for a fluid, including a sensing plate in thermal contact with the fluid, said sensing plate having a sensor part for producing electrical signals responsive to differences in temperature in said fluid and means for generating heat to produce a temperature differential in said fluid, and electronic means for processing the electric signals furnished by the sensor part to produce a signal indicative of the flow of the fluid, the improvement wherein said sensing plate comprises an integrated circuit, wherein said sensor part comprises at least one Seebeck detector integrated in said integrated circuit, and wherein said means for generating heat comprise one or more heating elements integrated in said integrated circuit.

4,373,387
AIR FLOW METER
Yutaka Nishimura; Hiroshi Kuroiwa; Tadashi Kirisawa, and Yoshishige Oyama, all of Ibaraki, Japan, assignors to Hitachi, Ltd., Tokyo, Japan
Filed Jul. 14, 1980, Ser. No. 168,736
Claims priority, application Japan, Jul. 24, 1979, 54/94725
Int. Cl.^{3} G01F *1/68*
U.S. Cl. 73—204 **13 Claims**

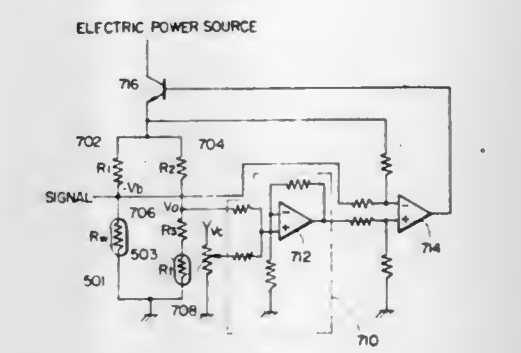

1. An air flow meter comprising an air flow velocity measuring resistor and a temperature compensating resistor installed in an air flow passage through lead wires exposed therein and supporting said resistors, said air velocity measuring resistor being heated to a predetermined temperature higher than that of said air drawn in said passage, said temperature compensating resistor being heated to a temperature almost equal to that of said air drawn in, and said temperature compensating resistor being supported by lead wires having no less heat resistance than that of the lead wires supporting said air velocity measuring resistor.

4,373,388
LIQUID LEVEL MONITORING DEVICE
Sotoo Kitamura; Sigeyuki Akita, both of Okazaki, and Junji Kitagawa, Aichi, all of Japan, assignors to Nippon Soken, Inc., Nishio, Japan
Filed Dec. 3, 1980, Ser. No. 212,275
Claims priority, application Japan, Dec. 25, 1979, 54-181059[U]
Int. Cl.^{3} G01F *23/18*
U.S. Cl. 73—301 **11 Claims**

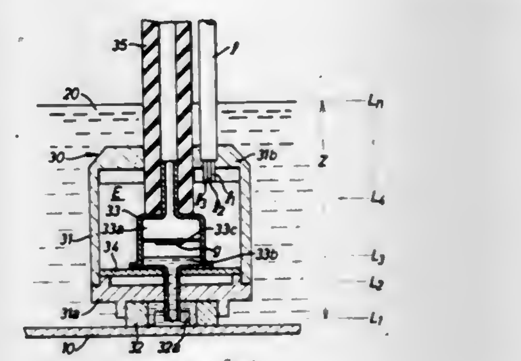

1. A liquid level monitoring device adapted for use in a container in which an amount of liquid is stored, said monitoring device comprising:
a casing arranged to be immersed in the stored liquid within said container, said casing having first and second ports and being integrally provided with a support member to be attached to a portion of the inner wall of said container, and said second port being integrally formed with a tubular extension having an open end to be located adjacent to the bottom of said container;
an elongated tube connected at its one end to said first port and positioned at its other end externally of said container;
a flexible diaphragm assembled within said casing to subdi-

vide the interior of said casing into first and second chambers respectively in open communication with said first and second ports, said first chamber being communicated with the atmospheric air through said tube, and said second chamber permitting the immerse of liquid through said second port thereinto such that an amount of the atmospheric air within said second chamber is compressed in dependence upon the amount of the stored liquid and that said diaphragm is flexed by a difference in pressure between said first and second chambers;

electric circuit means including a pressure transducer secured to said diaphragm to detect the rate of flexure of said diaphragm and including a control circuit to produce an electric signal indicative of the liquid surface level dependent upon the detected rate of flexure of said diaphragm; and

an indicator responsive to the electric signal from said control circuit for indicating the surface level of the stored liquid.

4,373,389

DEVICE FOR CAPACITIVE LEVEL MEASUREMENT

Rainer Decker, Hamburg, Fed. Rep. of Germany, assignor to Precitronic Gesellschaft fur Feinmechanik und Electronic m.b.H., Hamburg, Fed. Rep. of Germany

Filed Oct. 6, 1980, Ser. No. 193,930

Claims priority, application Fed. Rep. of Germany, Oct. 15, 1979, 2941652

Int. Cl.³ G01F *23/26*

U.S. Cl. 73—304 C **7 Claims**

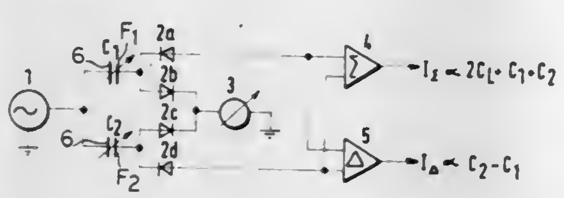

1. A capacitance type measuring device for measuring the level of liquid in a container, comprising:

(a) first, second and third electrodes arranged in said container to be in contact with said liquid, said electrodes being coextensive over a height (H) embracing at least the possible level variations of said liquid;

(b) said second electrode (F_1) being opposed to part of said first electrode for forming therewith a first measuring condenser having said liquid as a dielectric and having its capacitance responsive to the level and dielectric constant of said liquid;

(c) said third electrode (F_2) being opposed to another part of said first electrode and forming therewith a second measuring condenser having said liquid as a dielectric and having its capacitance responsive to the level and dielectric constant of said liquid;

(d) at least one of said second and third electrodes having its width varying over its height, and the dependence of the width from the height being different in said second and third electrodes;

(e) a means for applying electrical signals to said first and second measuring condensers and for obtaining therefrom first and second output signals responsive to the capacitances of said first and second condensers, respectively, which in turn are differently responsive to the level and dielectric constant of said liquid owing to said different dependence of width from height; and

(f) means for processing said first and second output signals together so as to obtain at least one of a measuring signal responsive only to said liquid level irrespective of said dielectric constant and a measuring signal responsive only to said dielectric constant irrespective of said level.

4,373,390

LIQUID GAGING SYSTEM COMPATIBLE WITH MULTIPLE CHARACTERIZATION OF EACH SENSOR

Martin J. van Dyke, Brooklyn Park; Dwight D. Colby, Roseville, and William R. Dougherty, St. Anthony, all of Minn., assignors to Honeywell Inc., Minneapolis, Minn.

Continuation of Ser. No. 149,795, May 14, 1980, abandoned. This application Jan. 28, 1982, Ser. No. 343,636

Int. Cl.³ G01F *23/26*

U.S. Cl. 73—304 C **49 Claims**

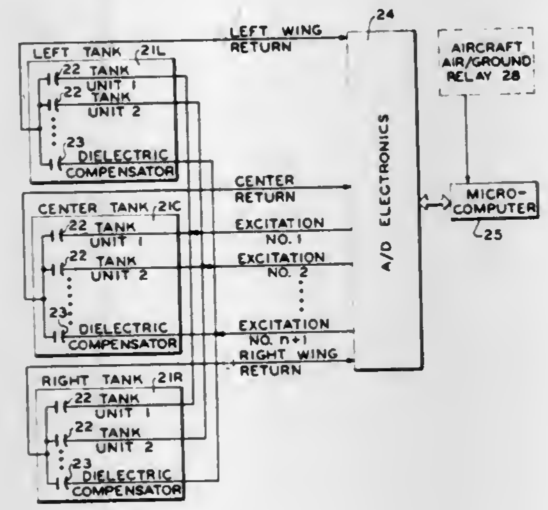

1. A liquid gaging system comprising:

a sensor for providing a liquid measurement signal related to a liquid depth at a particular location in a tank;

storage means for storing data including characterization parameters, the storage means comprising means for storing look up tables, there being a first look up table for storing at least a first parameter and a second look up table for storing at least a second parameter, each parameter being based on tank shape and volume and on sensor location, each parameter defining a relationship between a liquid depth and a volume related to a liquid quantity; and

determining means for selecting an appropriate look up table and for determining a value related to a liquid quantity in the tank based on the liquid measurement signal and the data, the determining means being connected to the sensor and to the storage means.

4,373,391

RELATIVE HUMIDITY SENSITIVE MATERIAL

Peter D. Johnson, Schenectady, N.Y., assignor to General Electric Company, Schenectady, N.Y.

Continuation-in-part of Ser. No. 52,083, Jun. 26, 1979, abandoned. This application Apr. 24, 1981, Ser. No. 257,081

Int. Cl.³ H01C *13/00*

U.S. Cl. 73—335 **12 Claims**

1. A relative humidity sensitive material comprising:

a mixture of at least one hygroscopic salt;

an at least partially electrically conductive metal based powder comprising a mixture of materials selected from the group consisting of Co_3O_4, Zr, and MnO_2; each said salt having a cationic constituent selected from the group consisting of the alkali and alkaline earth metals and an

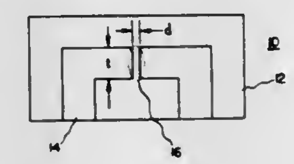

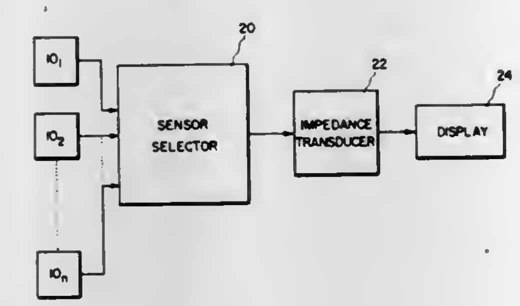

anionic constituent selected from the group consisting of chlorate, perchlorate, and chloro aluminate; and

an inert binder.

4,373,392

SENSOR CONTROL CIRCUIT

Shunichi Nagamoto, Nara, Japan, assignor to Matsushita Electric Industrial Co., Ltd., Osaka, Japan

Filed Jul. 1, 1980, Ser. No. 165,007

Claims priority, application Japan, Jul. 4, 1979, 54-84646

Int. Cl.³ G01W *1/00*

U.S. Cl. 73—336.5 **7 Claims**

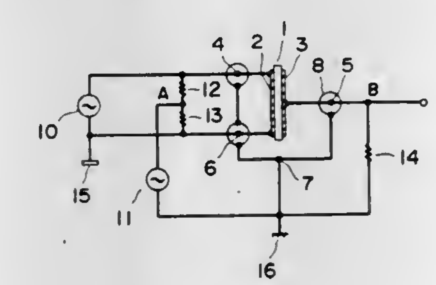

1. A sensor control circuit including a sensing device comprising a planar sensor element having two opposite major surfaces, first and second plate electrodes each having a predetermined exothermic resistance value and disposed on said two opposite major surfaces of said sensor element, two lead wires extending from said first plate electrode and connected to a power source whereby a current flowing through said lead wires and said first plate electrode causes said first plate electrode to generate heat, an additional lead wire extending from said second plate electrode, a pair of impedance elements connected in series between said two lead wires extending from said first plate electrode and a second power source interposed between the junction point of said pair of impedance elements and said additional lead wire extending from said second plate electrode and used for detecting the impedance of said sensor element.

4,373,393

METHOD FOR DETERMINING THE AGE OR AUTHENTICITY OF TIMBER STRUCTURES

Herman J. Heikkenen, 802 Preston Ave., Blacksburg, Va. 24061

Filed Jul. 19, 1978, Ser. No. 926,223

Int. Cl.³ G01N *33/46*

U.S. Cl. 73—432 R **1 Claim**

1. A method for determining the age or authenticity of a timber structure comprising:

(a) taking a plurality of radial core samples from several portions of a timber structure,

(b) taking at least one radial core sample from each of several mature living trees of one or more species or trees of one or more species whose death date is known, from at least one well drained, site in the general vicinity of the timber structure,

(c) measuring the absolute radial width of each annual growth ring for each of the samples taken in steps (a) and (b),

(d) comparing the width of each annual growth ring to the width of previous annular growth ring to determine if it is greater, less or equal in width to the previous annular growth ring, for each of the samples taken in steps (a) and (b),

(e) comparing the samples taken in step (a) to determine index years in which the annual growth ring relative to the preceding ring coincides in at least 80 percent of the samples,

(f) comparing the samples taken in step (b) to determine index years in which the annual growth ring relative to the preceding ring coincides in at least 80 percent of the samples,

(g) correlating on a first chronological scale the frequency pattern of the index years determined in step (e) with the frequency pattern of the index years determined in step (f) on a second chronological scale to establish a common period in the life of trees sampled in step (b) and trees used to make the timbers sampled in step (a),

(h) determining the last year of growth of the samples obtained in step (a) by comparing chronologically on the first chronological scale the date of the outermost growth ring of the samples taken in step (a) to the date of the outermost growth ring of the samples taken in step (b), on the second chronological scale.

4,373,394

ULTRASONIC TEST APPARATUS AND SWEEP VOLTAGE GENERATOR FOR USE THEREIN

Peter Renzel, Düren, and Werner Vermöhlen, Elsdorf, both of Fed. Rep. of Germany, assignors to Krautkramer-Branson Incorporated, Stratford, Conn.

Filed Oct. 21, 1980, Ser. No. 199,245

Claims priority, application Fed. Rep. of Germany, Nov. 9, 1979, 29452004

Int. Cl.³ G01N *29/04*

U.S. Cl. 73—606 **22 Claims**

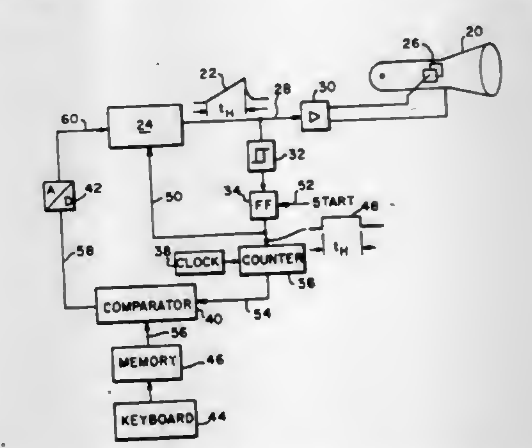

1. Apparatus for generating a voltage which cyclically varies linearly in magnitude with time comprising:

capacitor means;

means for supplying charging current to said capacitor means whereby a voltage which varies linearly with time will appear across said capacitor means;

a source of clock pulses;

counter means, said counter means being connected to receive clock pulses from said source;

means responsive to the initiation of charging of said capacitor means from a first voltage level for delivering clock pulses from said source to said counter means;

means responsive to the voltage across said capacitor means reaching a second voltage level for terminating the delivery of clock pulses to said counter means whereby said counter means will provide a signal commensurate with the time required for said capacitor means to charge from the said first voltage level to the said second voltage level;

selector means, said selector means providing a variable signal commensurate with a desired time for the voltage across said capacitor means to vary from said first voltage level to said second voltage level;

comparator means connected to said counter means and to said selector means for providing an error signal commensurate with any difference between the measured and desired times; and

means responsive to any error signal provided by said comparator means for varying the rate at which said capacitor means is charged from said current supplying means.

16. Apparatus for displaying the results of the non-destructive testing of an object with ultrasonic energy comprising:

means responsive to ultrasonic energy reflected from inhomogenities in a test object for converting said reflected energy into electrical signals;

a cathode ray tube;

means applying said signals commensurate with reflected echoes to the vertical electron beam deflection plates of said cathode ray tube;

adjustable sweep voltage generator means for producing a deflection signal having a sawtooth waveform and for applying said signal to the horizontal deflection plates of said cathode ray tube, the final amplitude of said sawtooth waveform signal and the slope thereof being pre-defined;

data entry means for generating a signal commensurate with a desired image region in units of length within the test object, said data entry means also permitting the generation of signals commensurate with characteristic values of the material comprising the test object and the construction of the ultrasound generator;

microprocessor means, said microprocessor means including data and instruction storage memories and a computing circuit, said microprocessor means computing a sawtooth waveform voltage slope corresponding to the desired image region and a delay time commensurate with the appropriate time for initiation of the sawtooth voltage subsequent to the generation of the examining ultrasonic energy; and

means responsive to the slope and delay time signals generated by said microprocessor means for adjusting said sweep voltage generator to vary the slope of the sawtooth waveform voltage and for initiating the operation of said sweep voltage generator.

4,373,395

APPARATUS FOR ULTRASONIC SCANNING

Jacques Borburgh, Poxdorf; Gerhard Naefe, Erlangen, and Helmut Rost, Uttenreuth, all of Fed. Rep. of Germany, assignors to Siemens Aktiengesellschaft, Berlin & Munich, Fed. Rep. of Germany

Filed Sep. 29, 1980, Ser. No. 191,779

Claims priority, application Fed. Rep. of Germany, Oct. 17, 1979, 2942049

Int. Cl.³ G01N ***29/00***

U.S. Cl. 73—607 **17 Claims**

1. Ultrasonic scanning apparatus including electronic delay circuitry for delaying echo signals produced in use by a multiplicity of transducers of the apparatus such that the phase relationship between respective echo signals is substantially maintained for each of a succession of ultrasonic scanning lines, the circuitry comprising a multiplicity of partial-line digital stores, each partial-line digital store being adapted for storing data in digital form corresponding to a part of an ultrasonic scanning line, a group of partial-line digital stores being associated with each of the transducers such that the total number of partial-line digital stores available for association with each transducer has a total storage capacity substantially less than that required for storing the data from the transducer which is to be stored during the generation of an ultrasonic scanning line, each group comprising at least three partial-line digital stores and being operated such that readout of part of the data of one ultrasonic scanning line makes room for the

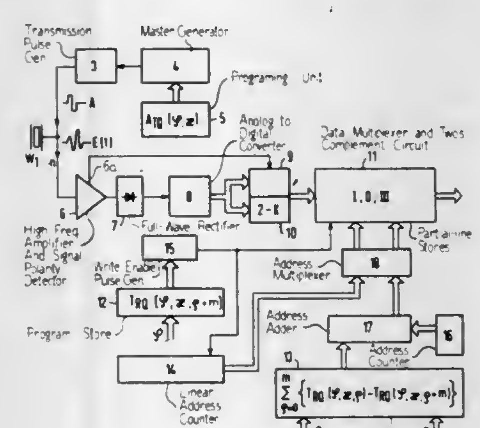

storage of a further part of the data of the same ultrasonic scanning line, and control means arranged such that, in use, data corresponding to echo signals is sequentially written in to the partial-line digital stores of the group for each of the transducers, beginning with the first such transducer to receive an echo signal, until at least the first partial-line digital store of the group for the last such transducer to receive an echo signal has been supplied with data, said control means being operative for simultaneously reading out stored data from all of the groups of partial-line digital stores after the time when the group of partial-line digital stores for the last such transducer to receive an echo signal has been supplied with data and before the group of partial-line digital stores associated with the first such transducer to receive an echo signal has exceeded its storage capacity.

4,373,396

MECHANICAL FILTER WITH ACOUSTIC SENSING

Robert A. Johnson, Tustin, Calif., assignor to Rockwell International Corporation, El Segundo, Calif.

Filed Sep. 22, 1980, Ser. No. 189,418

Int. Cl.³ G01H ***13/00;*** **G01L** ***23/22***

U.S. Cl. 73—651 **8 Claims**

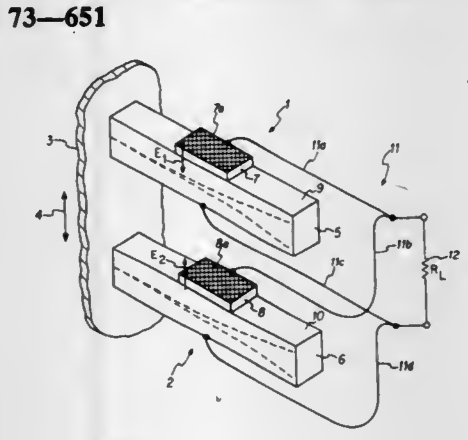

1. A mechanical bandpass filter driven by a velocity source, comprising:

a first flexure mode cantilever bar resonator having a resonant frequency f_1 and nodally connected to said velocity source, and having transducer means for generating an electrical output from flexural vibration;

a second flexure mode cantilever bar resonator having a resonant frequency f_2 and nodally connected to said velocity source, and having transducer means for generating an electrical output from flexural vibration;

means coupling the electrical outputs of said transducer means to define a passband frequency range corresponding to the range between and around f_2 and f_1 due to increased amplitude of vibration, and to define a stopband by signal cancellation with increasing attenuation farther away from said passband; and

impedance means R_L connected across said electrical outputs of said transducer means for controlling the passband ripple of said mechanical bandpass filter.

4,373,397

PIEZORESISTIVE PRESSURE CELL

Hans W. Keller, St.-Gallerstr. 106, CH-8404 Winterthur, Switzerland

Filed Jan. 30, 1981, Ser. No. 229,880

Claims priority, application European Pat. Off., Feb. 6, 1980, 80100603.2

Int. Cl.³ G01L ***9/06***

U.S. Cl. 73—721 **5 Claims**

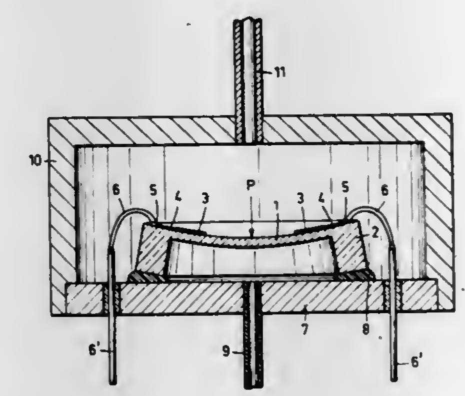

1. A piezoresistive pressure cell of generally cylindrical shape, comprising a front end cell wall constituting a metering diaphragm having at least one strain-responsive resistor secured thereon, said front cell wall consisting essentially of a solid insulating material, and which extends over an annular cylinder barrel portion having a uniform wall thickness substantially greater than the cross-sectional thickness of said metering diaphragm, said pressure cell further comprising a rigid rear cell wall upon which the cylinder barrel portion is sealed by a fixing material applied between the cylinder barrel end face and the rear cell wall, wherein the fixing material is a plastic material adapted to undergo stresses including rubber elastic elongation and shear.

4,373,398

INDICATING GAUGE WITH PRESSURE RELIEF VALVE

George M. Poneczek, Chicago, Ill., assignor to Stewart-Warner Corporation, Chicago, Ill.

Filed Feb. 2, 1981, Ser. No. 230,447

Int. Cl.³ G01L ***19/06, 7/08***

U.S. Cl. 73—738 **18 Claims**

1. An indicating instrument of the type that responds to pressure variations representing changes in a sensed parameter, comprising; housing means, a pressure responsive assembly in the housing means adapted to be connected to a pressure source that varies in accordance with the sensed parameter, an indicator in the housing means connected to be driven by the pressure responsive assembly so that the indicator provides a visual representation of variations in the sensed parameter, said housing means being sealed to prevent the entry of foreign material into the housing, and valve means for preventing an excessive increase in pressure in the housing means including an aperture in the housing means, a plug in the aperture constructed so that it may not pass inwardly into the housing means, and an adhesive covering and sealing the plug, said

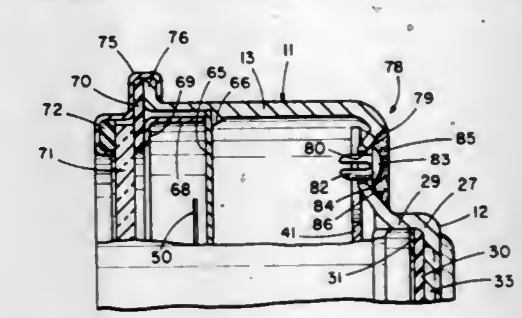

adhesive controlling the internal pressure in the housing means at which the plug will be released from the housing means aperture thereby relieving pressure within the housing means.

4,373,399

SEMICONDUCTOR STRAIN GAUGE TRANSDUCER

Alexei V. Beloglazov, poselok Khlebnikovo, Stantsionnaya ulitsa, 5, kv. 12, Moskovskaya oblast; Vladimir E. Beiden, K-482, korpus 4, kv. 2, Moscow; Georgy G. Iordan, ulitsa 26 Bakinskikh komissarov, 3, kv. 1, Moscow; Vladimir M. Karneev, Leningradskoe shosse, 8/2, kv. 346, Moscow; Vladimir S. Papkov, K-498, korpus 405, kv. 18, Moscow; Vladimir M. Stuchebnikov, ulitsa Gotvalda, 15, kv. 51, Moscow; Viktor V. Khasikov, Sadovo-Spasskaya, ulitsa, 21, kv. 5, Moscow, and Mikhail V. Surovikov, K-527, korpus 906, kv. 170, Moscow, all of U.S.S.R.

Filed Feb. 5, 1981, Ser. No. 231,890

Int. Cl.³ G01B ***7/16***

U.S. Cl. 73—777 **4 Claims**

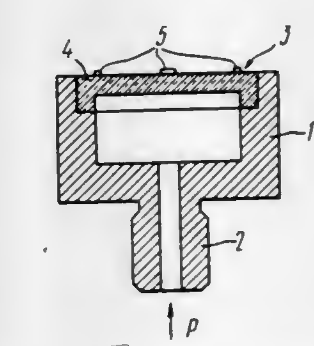

1. A semiconductor strain gauge transducer comprising: a sensitive element including a monocrystal sapphire substrate; epitaxial strain gauges made of silicon resistors of p-type conduction, arranged on said substrate and interconnected into a bridge or differential strain-sensitive circuit; a signal conversion unit whose input is connected to the output of said strain-sensitive circuit, wherein the hole concentration in the silicon is $3.5 \cdot 10^{19}$ to $3 \cdot 10^{20}$ cm^{-3}.

4,373,400

SIGNAL GENERATOR FOR ELECTROMAGNETIC FLOWMETERS

Toshio Sekiguchi, Tokyo, Japan, assignor to Hokushin Elect. Works, Ltd., Tokyo, Japan

Filed Dec. 15, 1980, Ser. No. 216,249

Claims priority, application Japan, Dec. 17, 1979, 54-162847

Int. Cl.³ G01F ***1/60***

U.S. Cl. 73—861.12 **4 Claims**

1. In an electromagnetic flowmeter having a signal generator whose signal is applied to a converter, said generator comprising:

A. a flow tube having an insulated liner through which the fluid to be metered flows, and a pair of diametrically-opposed electrodes;

B. a coil to establish an electromagnetic field in the flow tube to be intercepted by the fluid to induce a signal in the electrodes, which signal is applied to the converter;
C. an excitation circuit to derive an excitation current from an external power supply and to feed the current to said coil, said power supply including a d-c source and a periodically actuated reversing switch coupled thereto to yield an alternating rectangular excitation current wave, each cycle of which has a current pulse of one polarity followed by a current pulse of opposite polarity; and

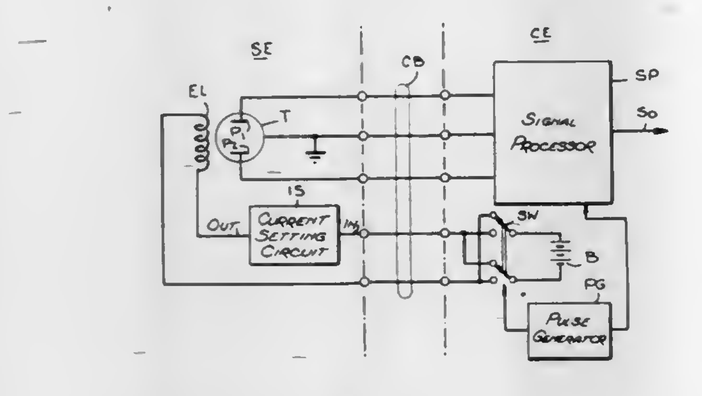

D. a current-setting circuit coupled to said excitation circuit for setting the alternating excitation current to a value establishing a constant relationship between the fluid flow rate and said signal, said current setting circuit being constituted by first and second pairs of diodes connected in series opposition, said pairs being connected in parallel opposition to define a rectifying bridge, said reversing switch being connected through the parallel pairs to said coil, and a constant-current network connected between the junction of the diodes in the first pair and the junction of the diodes in the second pair to maintain the pulses of opposite polarity in each cycle at a constant level.

4,373,401

TRANSDUCER STRUCTURE AND MOUNTING ARRANGEMENT FOR TRANSDUCER STRUCTURE FOR CLAMP-ON ULTRASONIC FLOWMETERS

Joseph Baumoel, 107 Columbia Dr., Jericho, Long Island, N.Y. 11753

Filed May 5, 1980, Ser. No. 146,530
Int. Cl.³ G01F *1/66;* G01N *29/02*
U.S. Cl. 73—861.18 9 Claims

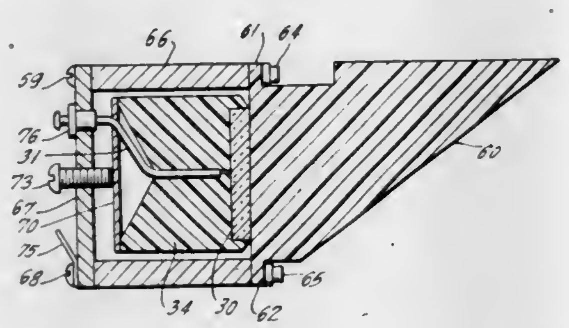

1. A transducer structure comprising, in combination:
a transducer crystal having electrodes which are energizable to produce mechanical energy; a sonic coupling body having a sonic output surface coupled to one surface of said crystal and conducting sonic energy from said one surface of said crystal to its said sonic output surface; said sonic coupling body comprised of a plastic material having sonic-temperature characteristics which are sufficiently close to those of steel to enable coupling to a steel pipe for good operation over a wide temperature range; said sonic coupling body having the shape of a rectangular wedge; the base of said wedge coupled to said one surface of said crystal; one side of said wedge defining said sonic output surface.

4,373,402

METHOD AND APPARATUS FOR MEASURING CABLE TENSION IN A PARKING BRAKE ASSEMBLY

Gary L. Barrett, Union Lake, Mich., assignor to GSE, Inc., Farmington Hills, Mich.

Filed Mar. 9, 1981, Ser. No. 242,095
Int. Cl.³ G01L *5/10, 5/28*
U.S. Cl. 73—862.39 14 Claims

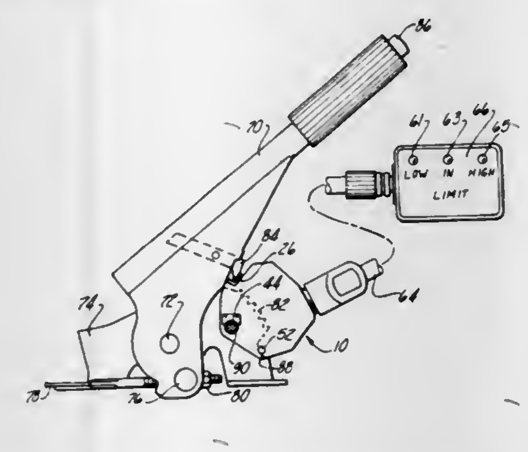

1. Apparatus for measuring the tension in a cable of a parking brake assembly having a lever arm pivotally connected to a mounting bracket, said apparatus comprising:
a force measuring transducer device including a load receiving surface;
at least one flexure element connected to the load receiving surface;
means on the flexure element for converting strain developed therein to an electrical signal as a function thereof; and
mounting means for securing the device on the bracket of the parking brake assembly such that the lever arm engages the load receiving surface when the lever arm has been raised to a given position;
whereby the tension on the cable may be adjusted until the output of the device indicates that the appropriate amount of tension on the cable has been obtained, the force applied by the lever arm to the load receiving surface of the transducer device being a function of the cable tension.

11. A method of measuring the tension on a cable in a parking brake assembly having a lever arm pivotally mounted on a bracket and latching means for selectively holding the lever arm in an adjusted position, said method comprising:
releasing the latching means and raising the lever arm to a given position;
inserting a force measuring transducer device on the bracket;
releasing the lever arm so that it comes into contact with the transducer device; and
converting the force applied by the lever arm to electrical signals by way of flexure elements in the transducer device to provide an output which is a function of the tension on the cable.

4,373,403

CONTROL FOR MECHANICAL TRANSMISSION

Theodore A. Malott, Jackson, and Barry L. Frost, Marcellus, both of Mich., assignors to Clark Equipment Company, Buchanan, Mich.

Filed Jan. 29, 1981, Ser. No. 229,472
Int. Cl.³ G05G *9/12, 5/10*
U.S. Cl. 74—337.5 10 Claims

1. A control for a transmission having multiple input portions and multiple output portions in which a plurality of speed ratios are provided by actuating selected pairs of input and output portions, comprising:

a pair of shift rails;
an axially movable and rotatable control shaft;
a pair of cam members mounted on the control shaft so as to move and rotate therewith;
each shift rail having a cam follower surface;
one of the cam members positioned on the control shaft so that it is aligned with the cam follower surface of one of the shift rails when the other of the cam members is positioned to be aligned with the other of the shift rails;
the one cam member adapted to cooperate with the cam follower surface of the one shift rail to effect movement of

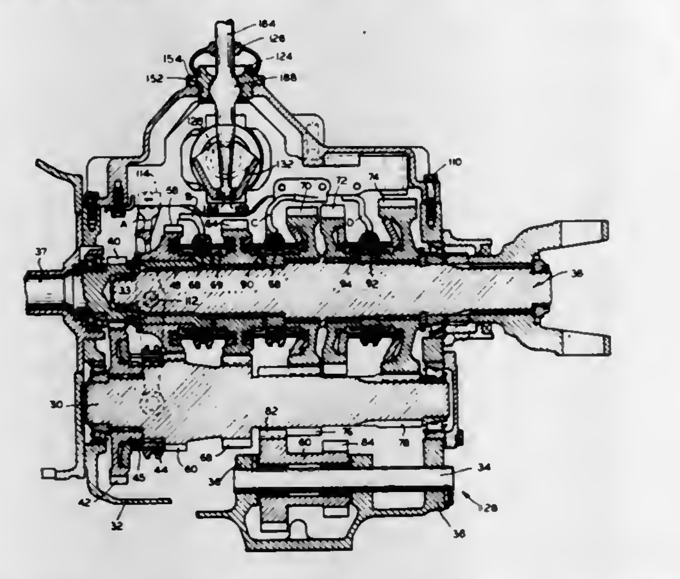

the respective shift rail upon rotation of the control shaft in a chosen direction whereby one of the input portions is actuated;
the other cam member adapted to cooperate with the cam follower surface of the other shift rail to effect movement of the respective shift rail upon said rotation of the control shaft in a chosen direction whereby one of the output portions is actuated; and
the movement of the one shift rail commences before and terminates during the movement of the other shift rail whereby the movements of the pair of shift rails are overlapped during rotation of the control shaft.

4,373,404

DIFFERENTIAL SCREW ACTUATOR

Theodore A. Heinz, Simi Valley, Calif., assignor to Rockwell International Corporation, El Segundo, Calif.

Filed Jun. 30, 1980, Ser. No. 164,417
Int. Cl.³ F16H *1/18*
U.S. Cl. 74—424.8 B 8 Claims

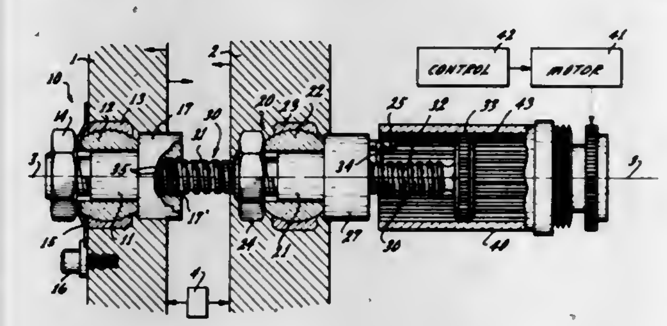

1. In a differential actuator for precision adjustment of spacing between a first and a second plate under utilization of a screw, there being first threaded means in the first plate and second threaded means in said second plate having different pitches, the screw threadedly engaging the first and second threaded means, the improvement comprising in combination first means for preventing rotation of the first threaded means during rotation and feedthrough of the screw; and
second means for preventing rotation of the second threaded means for and over a particular range only, while permitting rotation of the second threaded means with the screw in an adjoining range of rotational displacement of the screw, so that the spacing is coarsely adjusted by direct screw action of the screw in the first threaded means, and finely adjusted by differential screw action when rotation of the second threaded means is prevented.

4,373,405

MOLDED PLASTIC CONTROL LOCK KNOB WITH PUSH AND/OR PULL FEATURE

Ronald J. Geil, Vermilion, Ohio, assignor to Gould Inc., Rolling Meadows, Ill.

Filed Sep. 3, 1980, Ser. No. 183,842
Int. Cl.³ G05G *5/16, 1/08*
U.S. Cl. 74—531 9 Claims

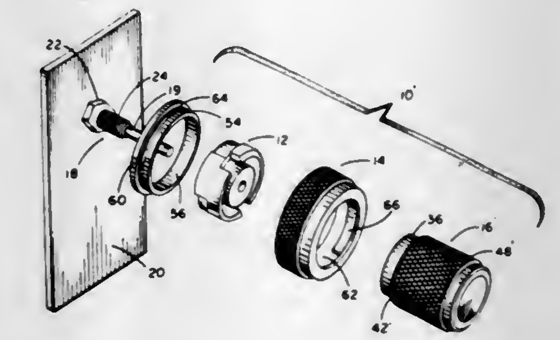

1. A locking device for use with an adjustable rotary control member of the type having a push and/or pull function, said rotary control member having a rotary shaft fixedly mounted through a panel, said locking device comprising:
a locking shoe assembly having a means for fixedly attaching said locking shoe assembly to said panel so as to remain rotationally fixed thereto wherein the rotary shaft extends axially through said locking shoe assembly, a circumferential receiving slot, and at least one locking shoe integrally attached at one end to said locking shoe assembly with an internally inclining outer cam surface wherein the distal other end of said locking shoe is free to move radially inward into said receiving slot when force is applied thereto;
an annular locking knob circumferentially mounted over said locking shoe assembly so that said shaft of said rotary control member is in axial alignment and extends through said locking knob and wherein said locking knob is free to move rotationally about said locking shoe assembly, said locking knob having at least one internally inclining internal cam being dimensioned so as to be closely adjacent with said internally inclining outer cam of said locking shoe when said locking knob is in an unlocked position and adapted to contact said internally inclined outer cam of said locking shoe when said locking knob is rotated into a locked position forcing the free end of said locking shoe into said receiving means;
an annular retention ring circumferentially mounted over said locking shoe assembly, so as to be located between said panel and said annular locking knob, said annular retention ring being dimensioned so as to fit loosely over said locking shoe assembly but not over said at least one locking shoe, said annular retention ring being located between said panel and said at least one locking shoe, said annular retention ring being attached to said annular locking knob so as to hold said annular locking knob in a longitudinal position with respect to said panel; and
a control knob mounted on said shaft of said rotary control device, said control knob having an attachement means for attaching said control knob to said shaft of said rotary control member so that rotation of the control knob will rotate said shaft of said rotary control device and said shaft of said rotary control device can be pushed and/or pulled, a land portion integrally attached to said knob and adapted to fit within said circumferential receiving slot of

said locking shoe assembly, so that when said locking knob is in said unlocked position said control knob is free to rotate and to be pushed and/or pulled and when said locking knob is in said locked position said at least one locking knob internal cam forces said at least one locking shoe into said receiving slot binding said land portion in said receiving slot thus preventing said control knob from being rotated and from being pushed and/or pulled.

4,373,406
FULL ACCESS PALLET SHUTTLE GUARDING
Tadeusz W. Piotrowski, Cincinnati, Ohio, assignor to Cincinnati Milacron Inc., Cincinnati, Ohio
Filed Aug. 1, 1980, Ser. No. 174,441
Int. Cl.[3] F16P *3/04*
U.S. Cl. 74—613 **3 Claims**

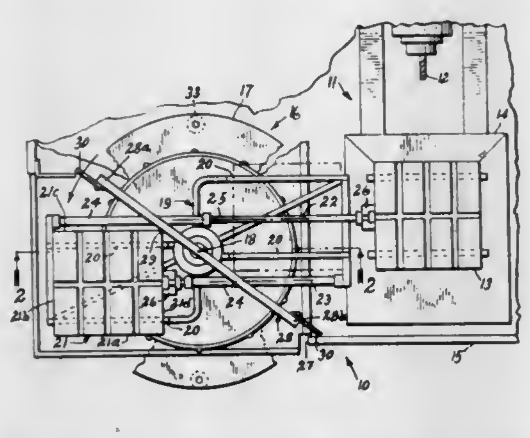

1. In a machine tool pallet transfer system having a pair of pallets oppositely disposed on a rotatable deck section about a generally vertical rotary transfer axis and movable along respective horizontal linear transfer axes toward and away from said pallet transfer system, an improved guard comprising:
(a) a guard base affixed to said rotatable deck section of said pallet transfer system; and
(b) a planar guard body, affixed to said base and vertically disposed along a horizontal line passing through said rotary axis at an angle oblique to said linear transfer axes, said planar guard body vertically extending to a point above said pallets, and horizontally extending to a diameter defined by a radial line from said vertical axis to the extreme edges of rotating pallets.

4,373,407
CLUTCH MECHANISM FOR POWER TRANSMISSION SYSTEM
Kiyokazu Okubo, Wako, Japan, assignor to Honda Giken Kogyo Kabushiki Kaisha, Tokyo, Japan
Filed Nov. 19, 1980, Ser. No. 208,416
Claims priority, application Japan, Nov. 19, 1979, 54-149694; Nov. 19, 1979, 54-149695; Nov. 19, 1979, 54-149696; Dec. 26, 1979, 54-169645
Int. Cl.[3] F16H *35/04;* **F16D** *47/04*
U.S. Cl. 74—650 **8 Claims**

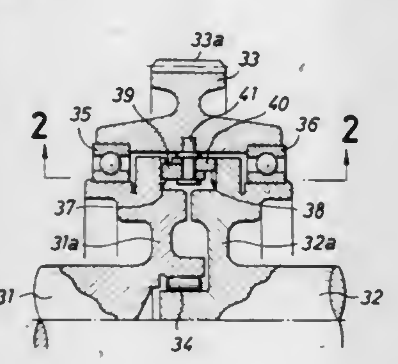

1. A clutch mechanism for a power transmission system having one drive member and two driven members, comprising:
at least one pair of clutch members interposed between said drive member and said two driven members so as to transmit the rotational power of said drive member to said driven members independently of each other when said drive member rotates;
said pair of clutch members being constructed so as to operatively cooperate with said drive member and said drive members such that one of said driven members, which is rotating at a higher speed than said drive member due to external force, is set free from said drive member while said power from said drive member is transmitted to the other driven member;
said pair of clutch members comprising a pair of pawls which are hingedly connected in a rocking manner to said drive member and which are biased to be opened;
said two driven members being respectively formed with a radially inner row of helical teeth and a radially outer row of helical teeth, said inner and outer rows of helical teeth being arranged to face each other and being dimensioned and shaped to engage with and disengage from said pawls;
the distance between the leading ends of said pawls at the minimum angle therebetween being set to be larger than the distance between the corresponding opposed protruding portions of said inner and outer rows of said helical teeth and smaller than the distance between the protruding portions of one row of said helical teeth and corresponding opposed recessed portions of the other row of said helical teeth;
said two driven members having a common substantially horizontal axis; and
said pair of pawls being hingedly movable to substantially the radial direction of said common axis.

4,373,408
VARIABLE RATIO FLUID-MECHANICAL DRIVE APPARATUS
Ned D. Mills, West Richland, Wash., assignor to Varitran, Inc., Richland, Wash.
Filed Jun. 16, 1980, Ser. No. 160,014
Int. Cl.[3] F16H *47/04*
U.S. Cl. 74—687 **12 Claims**

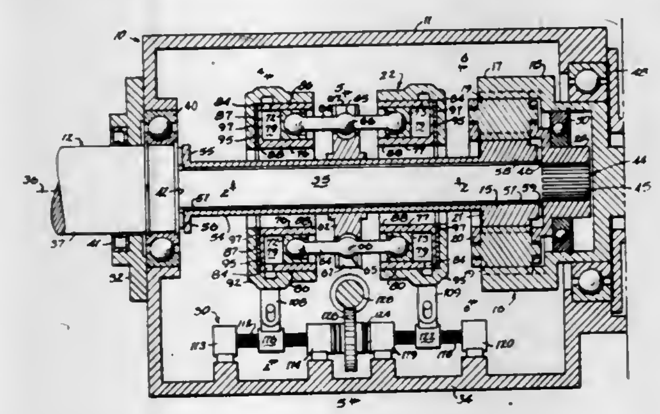

1. A variable ratio fluid-mechanical drive apparatus comprising:
a housing;
a planetary gear set mounted within the housing having a ring gear member, a planetary gear carrier member and a sun gear member with complementary ring gear, planetary gears and sun gear in intermeshing engagement for providing a wide range of speed ratios;
a power input drive means operatively connected to one of the planetary members for driving the planetary gear set;
a power output drive means operatively connected to one of the other planetary members to enable the planetary gear set to drive the power output drive means;
a positive displacement pump unit having a first unit shaft mounted within the housing for rotation about a pump unit axis in which the first shaft is operatively connected to the remaining planetary member to control the rotational speed of the remaining planetary member;
a positive displacement motor unit having a second unit shaft mounted within the housing for rotation about a motor unit axis in which the second shaft is operatively connected to the power output drive means to transfer torque between the second shaft and the power output drive means;
fluid connecting means operatively interconnecting the pump unit and the motor unit for communicating fluid between the pump unit and the motor unit;
wherein one of the positive displacement fluid units has:
(a) a plurality of piston rods extending axially in opposite directions with respect to the one unit shaft at radially and angularly spaced locations about the one unit shaft;
(b) means for maintaining the piston rods axially stationary with respect to the unit axis;
(c) each piston rod having axially stationary pistons mounted at respective rod ends;
(d) opposed piston cavity barrels mounted for orbital movement about the unit shaft and having a plurality of piston cavities receiving the pistons therein;
(e) barrel carrier means mounted within the housing rotatably supporting the cavity barrels for orbital movement about the one unit shaft and pivotally supporting the cavity barrels for pivotal movement about spaced tilt axes that are normal to and intersect with the one unit axis to orient the piston cavity barrels at varying orbital tilt angles about the tilt axes with respect to the unit axis; and
first control means operatively connected to the barrel carrier means for pivoting the barrels in unison in opposite directions about the tilt axes to vary the tilt angles of the barrels to vary the fluid displacement of the one unit in relation to the magnitude of the tilt angles.

4,373,409
COMBINATION CREEPER GEAR AND CONTROL SYSTEM FOR A TRANSMISSION
Vasile Benedek, Bruhl, and Volker D. Hückler, Mannheim, both of Fed. Rep. of Germany, assignors to Deere & Company, Moline, Ill.
Filed Jul. 28, 1980, Ser. No. 172,616
Claims priority, application Fed. Rep. of Germany, Jul. 31, 1979, 2930950
Int. Cl.[3] F16H *3/02*
U.S. Cl. 74—745 **10 Claims**

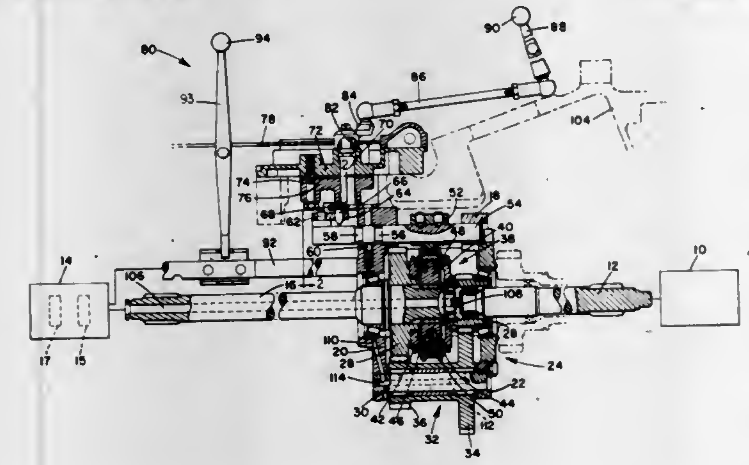

1. A combination creeper gear and control system for a transmission having a range selector gear followed by a change speed gear, said combination comprising:
(a) an engine driven drive shaft;
(b) an input shaft extending into said transmission;
(c) a creeper gear mechanism comprising a drive gear mounted on said drive shaft, a driven gear mounted on said input shaft and a lay shaft aligned parallel to both said drive shaft and said input shaft having a compound gear mounted thereon, said compound gear having a first and a second gear, said first gear meshing with said drive gear and said second gear meshing with said driven gear;
(d) a synchronizer located between said drive gear and said driven gear, said synchronizer being selectively engageable between a direct mode wherein said drive shaft is directly connected to said input shaft and a creep mode wherein said drive shaft is connected to said input shaft by way of said lay shaft and said compound gear; and
(e) selector control means for activating said synchronizer between said direct mode and said creep mode, said selector control means including a first lever-actuated shift rod associated with said creeper gear mechanism, a second lever-actuated shift rod associated with said range selector gear, and a locking pin slideably positioned between said first and second shift rods, said locking pin being controlled by movement of said first and second shift rods such that said creep mode cannot be selected when said range selector gear selects a higher speed range but which can be selected in either a low speed forward range or a reverse range of said range selector gear.

4,373,410
METHOD AND APPARATUS FOR FABRICATING DIAMOND STUD ASSEMBLIES
Kenneth Davis, 3410 W. Ohio, Midland, Tex. 79701
Filed Jul. 21, 1980, Ser. No. 170,840
Int. Cl.[3] E21B *10/56*
U.S. Cl. 76—108 A **12 Claims**

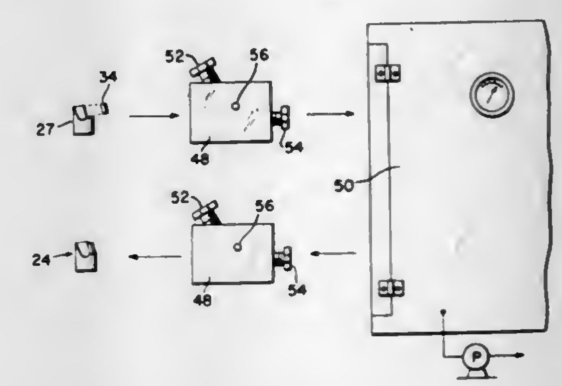

1. Method for making a polycrystalline diamond stud assembly for a drill bit, comprising the steps of:
(1) making a support stud for supporting a polycrystalline diamond cutter element;
(2) providing a diamond cutter element;
(3) preparing the surface between said element and said stud so that the element can subsequently be fused to the stud;
(4) placing the stud of step (1) and the element of step (2) into a fixture;
(5) aligning the stud and element respective to one another so that the element is positioned in its operative cutting position respective to the stud;
(6) selecting a shim having a relatively high coefficient of thermal expansion respective to the stud, element, and fixture;
(7) placing the shim of step (6) adjacent to one of the outer face of the element and the lower terminal end of the stud;
(8) forcing the shim and stud towards one another to thereby force the element towards the stud; and, mechanically immovably holding the shim, stud, element, and fixture together in fixed relationship respective to one another;
(9) heating the fixture containing the stud, element, and shim until fusion occurs between the element and stud; whereupon, the coefficient of thermal expansion of the shim causes the stud and element to be forced towards one another with a force which increases in proportion to the temperature elevation;
(10) cooling the fixture of step (9), removing the stud and fused element from the fixture, thereby providing the aforesaid polycrystalline diamond cutter assembly.

7. Apparatus for making a polycrystalline diamond stud assembly for a drill bit, comprising:
a fixture, a cavity formed within said fixture for removably receiving a support stud and cutter element therewithin;
first and second abutment means located within said cavity and placed laterally respective to one another and connected to the fixture, said first abutment means has a surface formed thereon for engaging the stud of a stud assembly, said second abutment means has a face thereon for engaging the face of the element of a stud assembly;
one of said first and second abutment means being movable respective to the other of said first and second abutment means to cause a cutter assembly which may be located therebetween to be placed into compression;
one of said first and second abutment means includes a shim means made of a material having relatively high coefficient of expansion, said shim means being interposed between the stud assembly and one of said abutment means; said shim, stud, element, and fixture are mechanically held together in fixed relationship respective to one another;
an alignment means for enabling the element to be moved laterally respective to the stud after the stud and element have been received between said abutment means;
so that when the fixture containing the stud and element is heated, the element is fused to the stud with great force being exerted at the interface between the element and stud due to the difference in coefficient of expansion of the shim respective to the fixture, stud, and element.

4,373,411
EXPANSIBLE MANDREL
Georges Kanakaris, Tremblay, France, assignor to Santrade Ltd., Lucerne, Switzerland
Filed Feb. 11, 1981, Ser. No. 233,456
Claims priority, application France, Feb. 19, 1980, 80 03548
Int. Cl.³ B23B *31/42*
U.S. Cl. 82—44 **11 Claims**

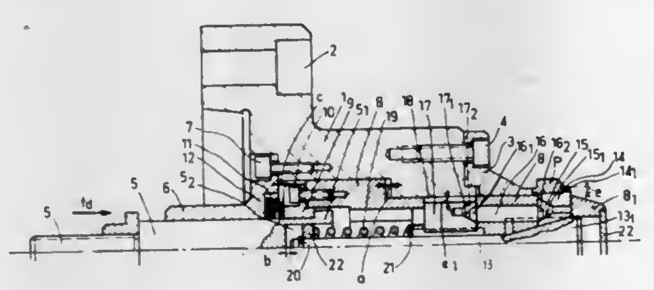

1. An expansible mandrel for loading and unloading a work member while the mandrel is rotating, said mandrel comprising:
a frame having an abutment;
a mandrel body slidable forwardly and rearwardly in said frame;
at least two slide members mounted for radial movement within first recesses in said body, said slide members each including:
a radial projection for pressing the work member against said abutment, and
an inclined surface facing radially inwardly;
a piston movable forwardly and rearwardly relative to said body, said piston including inclined surface means engageable with said inclined surfaces of said slides;
a first spring arranged for urging said piston rearwardly to bring said inclined surface means into engagement with said inclined surfaces and urge said slides radially outwardly into engagement with the work member;
a second spring for urging said body and slides forwardly;
a coupling rod movable:
forwardly by a first distance to become disengaged from said body to enable said body and slides to be pushed forwardly by said second spring, and further by a second distance to push said piston forwardly against the bias of said first spring,
rearwardly by said second distance to enable said first spring to push said piston rearwardly, and further by said first distance to engage said body to pull the latter rearwardly;
weight members mounted in second recesses of said body for radial movement;
a mechanical linkage operably interconnecting said weight members and respective ones of said slides such that centrifugally-induced radial outward movement of said weight members produces radial inward movement of said slides and their projections when said piston is moved forwardly by said control rod and out of engagement with said slides, said linkage effecting radial inward movement of said weight members in response to radial outward movement of said sleeves produced by said piston when said coupling rod is moved rearwardly.

4,373,412
METHOD AND APPARATUS FOR CUTTING SHEET MATERIAL WITH A CUTTING WHEEL
Heinz J. Gerber, and David R. Pearl, both of West Hartford, Conn., assignors to Gerber Garment Technology, Inc., South Windsor, Conn.
Filed Jul. 10, 1980, Ser. No. 168,312
Int. Cl.³ D06H *7/00;* G06F *15/46*
U.S. Cl. 83—24 **6 Claims**

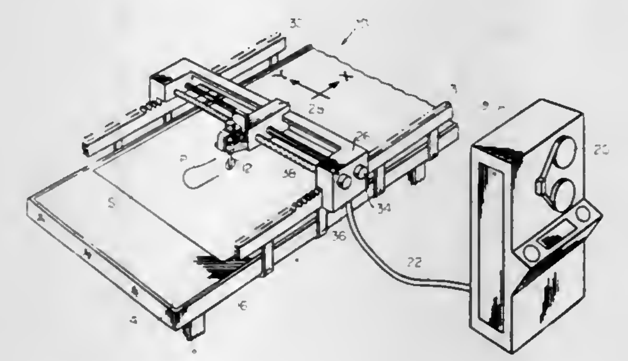

1. A method of cutting limp sheet material along predetermined lines of cut defining the contours of pattern pieces comprising the steps of:
providing in a program controlled cutting machine a support having a hard, smooth surface on which limp sheet material is positioned for cutting;
attaching limp sheet material to be cut to the hard, smooth surface of the support in a flat condition for cutting by spreading an adhesive directly on the support surface by spraying the adhesive in a stipple pattern on the support surface such that less than the entire area of the surface is provided with adhesive and laying the limp sheet material in contact with the adhesive on the surface so that only adhesive lies between the material and the hard surface;
placing a cutting wheel having a sharp peripheral cutting edge in engagement with the attached sheet material;
moving the cutting wheel and the attached sheet material relative to one another to advance the wheel along a closed and predetermined line of cut defining the contours of a pattern piece in accordance with a cutting program and simultaneously pressing the cutting wheel against the hard support surface with sufficient pressure to cause the cutting edge of the wheel to cut through the attached material to the support surface along the line of cut and sever a pattern piece from the surrounding material and then;
removing the cut pattern piece from the support surface and the surrounding material adhesively attached to the surface.

4,373,413
PUNCH PRESS APPARATUS FOR PLACEMENT AND ALIGNMENT OF A KNIFE HOLDER
Hans Mohrbach, Rieschweiler, Fed. Rep. of Germany, assignor to Ernst Mohrbach KG, Rieschweiler, Fed. Rep. of Germany
Filed Dec. 10, 1980, Ser. No. 215,078
Claims priority, application Fed. Rep. of Germany, Dec. 22, 1979, 2952010
Int. Cl.³ B26F *1/38*
U.S. Cl. 83—123 **7 Claims**

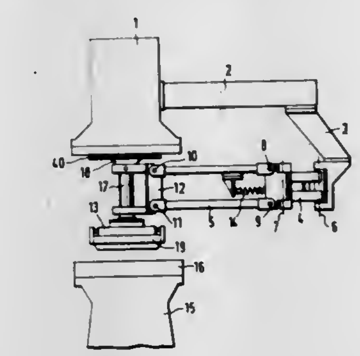

1. Apparatus for the placement and alignment of punch knives on material to be punched in a punch press, comprising a support, a first swivel arm having a first end and a second end with the first end pivotally attached to said support for pivotal movement about a vertical axis, a second swivel arm having a first end and a second end with the first end pivotally attached to the second end of said first swivel arm for pivotal movement about a vertical axis, said second swivel arm being pivotally mounted for pivotal movement about a horizontal axis, and a knife holder pivotally attached to the second end of said second swivel arm, said knife holder supported by said first and second swivel arms for movement along horizontal and vertical coordinates, said second swivel arm comprises a double-armed parallelogram arm with each arm of said double-armed parallelogram arm pivotal about a separate horizontal axis, means for effecting a restoring force on said swivel arm for returning said swivel arm to a horizontal position after it is displaced during a punching operation, said knife holder includes a tubular vertically aligned member extending upwardly from said knife holder, said second swivel arm is pivotally connected to said member, said tubular member forming a cylinder therein, a piston located in the lower end of said cylinder, an ejection plate secured to the lower end of said piston exteriorly of said cylinder, and means in communication with said cylinder for supplying a hydraulic medium thereto for displacing said piston and said ejection plate in the downward direction.

4,373,414
CODED KEY CUTTING DEVICE
Frank P. Agius, 909 Washington Ave., Alpena, Mich. 49707
Filed Oct. 6, 1980, Ser. No. 194,255
Int. Cl.³ B26F *1/12*
U.S. Cl. 83—414 **6 Claims**

1. An improvement in a coded key cutting device, said device having a frame, means at one end of the frame defining a cutting area, first and second carriage assemblies movable relative to one another and to said frame, said first carriage assembly arranged for transverse movement on said frame and said second carriage assembly positioned on said first carriage assembly and arranged for movement axially thereof, said improvement comprising a first cam assembly on said frame arranged to impart movement on said first carriage assembly, said first cam assembly comprising a knob rotatably mounted on said frame, an annular flange on said knob, a cam configuration on said annular flange and a cam follower on said first carriage assembly engaging said cam, a secondary cam assembly on said first carriage assembly arranged to impart movement to said secondary carriage assembly, means for securing a key blank to said second carriage assembly, a die and a punch located within said cutting area, said punch being reciprocal

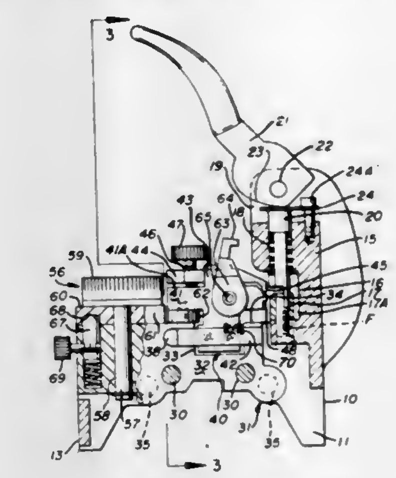

relative to said die, means for indexing said cam assemblies and means for moving said punch.

4,373,415
ELECTRONIC MUSICAL INSTRUMENT
Nobuaki Kondo, Omiya, Japan, assignor to Kabushiki Kaisha Kawai Gakki Seisakusho, Japan
Filed Mar. 17, 1980, Ser. No. 130,774
Claims priority, application Japan, Mar. 26, 1979, 54-35248
Int. Cl.³ G10H *1/36*
U.S. Cl. 84—1.01 **5 Claims**

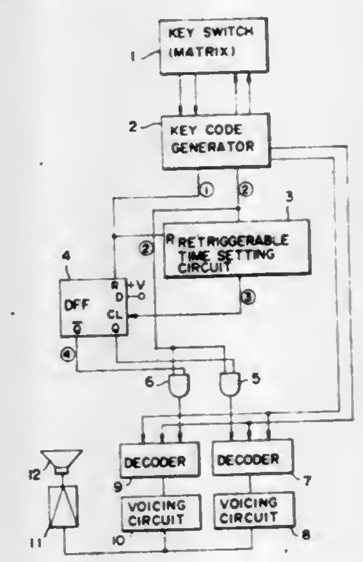

1. An electronic musical instrument comprising:
a single manual keyboard having keys;
said keyboard being provided with two voicing blocks, one of said voicing blocks producing, in response to key depression, at least one of a melody tone, an accompaniment tone, or a base tone, with the other of said blocks producing at least one of the remaining of said tones, said voicing blocks having a spatial interval of keys of the keyboard therebetween;
means for producing time-divided signals by depression of a key;
first circuit means responsive to said time-divided signals for producing a certain time interval for distinguishing between tones produced by said voicing blocks and for thereby separating in time the tones produced,
and
a second circuit means for producing monophonic and polyphonic sounds from the tones separated by said first circuit means.

4,373,416
WAVE GENERATOR FOR ELECTRONIC MUSICAL INSTRUMENT

Akinori Endo, and Hirokazu Kato, both of Hamamatsu, Japan, assignors to Nippon Gakki Seizo Kabushiki Kaisha, Shizuoka, Japan
Continuation of Ser. No. 865,272, Dec. 28, 1977, abandoned. This application Dec. 10, 1980, Ser. No. 214,939
Claims priority, application Japan, Dec. 29, 1976, 51-158945; Dec. 29, 1976, 51-158946; Dec. 29, 1976, 51-158947; Dec. 29, 1976, 51-158949
Int. Cl.^{3} G10H *1/00*
U.S. Cl. 84—1.01 **25 Claims**

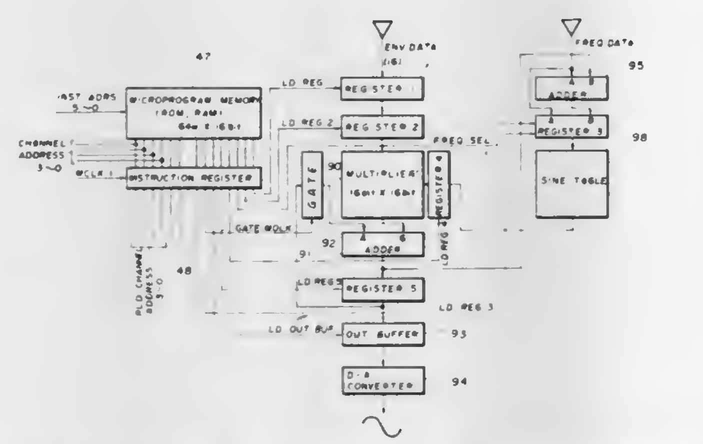

1. A wave generator for an electronic musical instrument, comprising: a microprogram memory for storing a set of instructions, said instructions consisting of instructions for musical tone calculation and for indicating the sequence of calculation of a plurality of sample values constituting a musical tone waveform according to a predetermined calculation formula; an instruction delivery circuit connected to said microprogram memory for delivering said instructions; a data source for generating frequency data and envelope data which respectively designate a tone pitch and a sounding timing of each tone to be produced;

an arithmetic circuit for carrying out waveform calculations under the control of said instructions; a plurality of registers connected to said data source, said instruction delivery circuit and said arithmetic circuit for storing said frequency data, said envelope data, and arithmetic intermediate results which are inputted from said arithmetic circuit during the waveform calculations; and

a function table connected to said registers for storing function values at respective addresses and delivering the function values when accessed by said registers under the control of said instructions;

said arithmetic circuit carrying out said calculations using said frequency data, said envelope data and said function values received from said registers and in accordance with said instructions received from said registers;

the calculation results constituting a musical tone wave.

22. A wave generator for an electronic musical instrument, comprising:

a segment indicating signal generator for generating, one after another in sequence, a plurality of different numerical valued segment indicating signals, the segments being timewise divisions of an envelope wave to be generated;

a variation rate generator for generating a plurality of different variation rate signals, each being a signal exhibiting a numerical value, said variation rate generator being connected to said segment indicating signal generator to selectively generate a variation rate signal from among said variation rate signals according to said segment indicating signals; and

a calculation circuit including an arithmetic circuit and a register and connected to said variation rate generator, for sequentially producing, by calculation using each said numerical value as a calculation increment, sample values are after another which constitute an envelope wave having wave values varying at a rate determined by the selected one of said variation rate signals for each of said segments.

4,373,417
ELECTRIC GUITAR

Gregg Wilson, Aurora, Colo., and John F. Page, La Mirada, Calif., assignors to CBS Inc., New York, N.Y.
Filed Jun. 10, 1981, Ser. No. 272,198
Int. Cl.^{3} G10H *3/00;* **G10D** *1/08, 3/04, 3/18*
U.S. Cl. 84—1.16 **10 Claims**

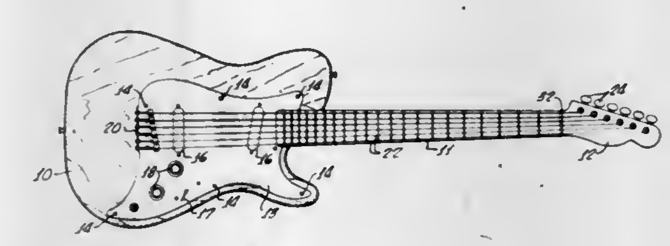

1. An electric guitar, which comprises:
(a) a wooden body,
(b) an elongated neck extending from one end of said body, and having a head at the outer end thereof,
(c) a pickguard secured to the upper surface of said body, said pickguard being formed of sheet metal,
(d) a flange integral with a region of said pickguard remote from said neck,
said region being disposed along an imaginary extension of said neck,
said flange extending upwardly from said pickguard,
said flange forming part of a bridge assembly,
(e) a plurality of tensioned guitar strings extending from said head along said neck and across a portion of said bridge assembly, and
(f) pickup means to sense the vibrations of said strings.

4,373,418
TUNING FORK MOUNTING ASSEMBLY IN ELECTROMECHANICAL PIANOS

Harold B. Rhodes, La Habra, and Steven J. Woodyard, Stanton, both of Calif., assignors to CBS Inc., New York, N.Y.
Filed Jan. 9, 1981, Ser. No. 223,777
Int. Cl.^{3} G10D *13/08;* **G10H** *3/00*
U.S. Cl. 84—404 **15 Claims**

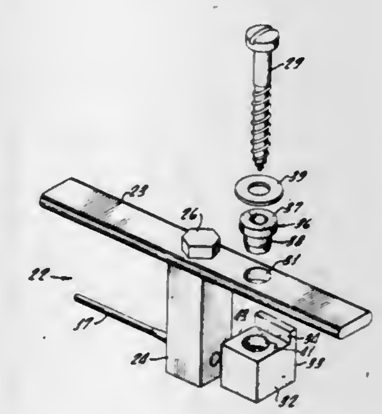

1. In an electromechanical piano of the type in which each tone is generated by striking the low-mass leg of an asymmetrical fork, and the resulting vibrations of such leg are transduced into a voltage adapted to be amplified and used to drive a loudspeaker, an improved mounting means for each such fork, said mounting means comprising:
(a) a single screw extended through an oversize opening in a high-mass portion of said fork and thence into a support,
(b) resilient means to maintain said high-mass portion in spaced relationship from said support without effecting substantial damping of said fork,

(c) means to prevent said fork from rotating about the axis of said screw,
said means (c) being spacer or standoff means interposed between said fork and the fork adjacent thereto for contact with high-mass portions of both forks,
the single screw for each fork cooperating with the screw of the adjacent fork, and also with high-mass portions of both forks and with spacer or standoff means, to prevent rotation of each fork about the axis of its associated screw, and
(d) characterized in that said means (a) and (b) constitute the sole support for said fork, and said means (c) constitutes the sole means for preventing each fork from rotating about the axis of its associated screw.

4,373,419
DRUM APPARATUS

Gene J. Tuttrup, 12 Vista Villa Park, Waseca, Minn. 36093
Filed Jan. 12, 1981, Ser. No. 224,428
Int. Cl.^{3} G10D *13/02*
U.S. Cl. 84—411 R **25 Claims**

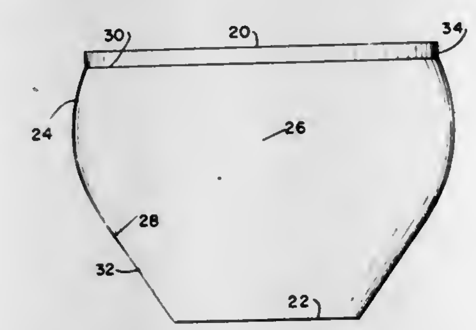

1. Percussion instrument apparatus comprising a drum body having a first open end and a smaller second open end opposite the first open end, the body having first and second sidewall sections, the first sidewall section comprising a truncated spherical section curving convexly and the second sidewall section comprising a truncated conical section sloping inwardly from the first sidewall section.

4,373,420
COMBUSTION SUPPRESSOR

Edward T. Piesik, Pomona, Calif., assignor to General Dynamics, Pomona Division, Pomona, Calif.
Filed Oct. 6, 1980, Ser. No. 194,533
Int. Cl.^{3} F41F *3/04*
U.S. Cl. 89—1.812 **8 Claims**

7. A method of suppressing exhaust gas combustion in a multiple rocket launching system comprising a plurality of rocket launch tubes having exhaust gas exits and a plenum chamber interconnecting said exhaust gas exits and communicating with external exhaust means, said method comprising:
sensing the pressure in the launch tubes during firing of the rockets;
determining when the pressure in said launch tube falls below a preselected level; and
providing a supply of inert gas to said plenum when pressure in said launch tube falls below said preselected level in a

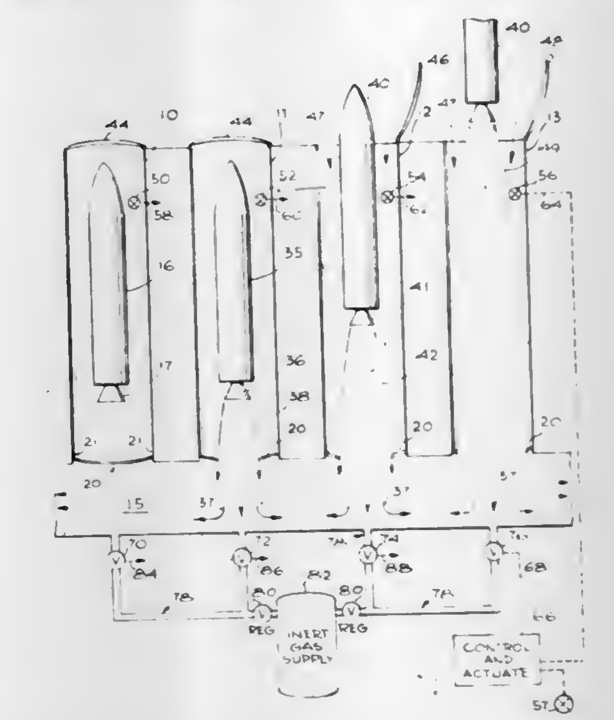

quantity effective to prevent ingress of combustible atmospheric gases into said plenum.

4,373,421
EMERGENCY AEROSOL LUBRICATION DEVICE, PARTICULARLY FOR AIRBORNE ENGINES

Andre A. M. L. Camboulives, Savigny sur Orge; Pierre Debeneix, Saint Sauveur sur Ecole; Claude V. L. Gendronneau, Fontainebleau, and Roger P. Hugnet, Paris, all of France, assignors to Societe Nationale d'Etude et de Construction de Moteurs d'Aviation (S.N.E.C.M.A.), Paris, France
Filed Sep. 15, 1980, Ser. No. 187,069
Claims priority, application France, Sep. 17, 1979, 79 23488
Int. Cl.^{3} F01M *1/18*
U.S. Cl. 184—6.4 **4 Claims**

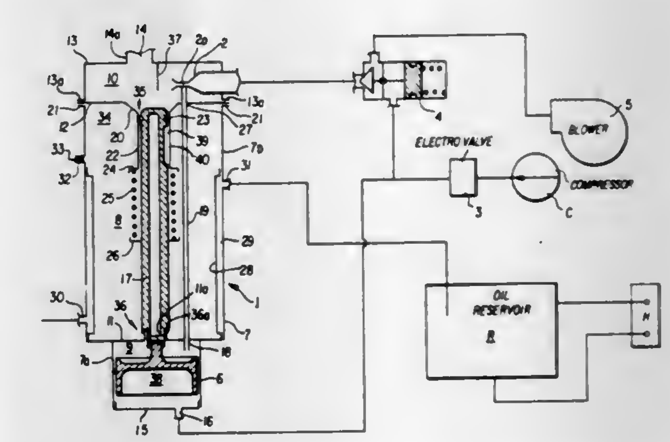

1. Emergency aerosol lubrication device, particularly for an airborne engine, comprising:
a closed reserve compartment for placing a certain quantity of oil in reserve,
means for introducing oil into said reserve compartment, with a volume of air provided at the upper end of said reserve compartment,
an aerosol container connected to lubrication points and disposed above and separated from said reserve compartment by a wall, at least a part of said wall being essentially oil-tight under low pressure so as to avoid drainage of oil out of said reserve compartment, and having a depression, at the lower point of which opens a recovery conduit for recovery of non-atomized oil, with said conduit communicating with said reserve compartment,

controllable means supplied separately with air to atomize said oil in said aerosol container,
an oil supply conduit operatively associated with said controllable means, opening into the lower part of said reserve compartment, and
means for keeping the reserve oil at an appropriate temperature.

4,373,422
RECIPROCATING FEED SYSTEM
William J. Washburn, Capistrano Beach; Hugh B. Thompson, Santa Ana, and Clifford E. La Fever, Mission Viejo, all of Calif., assignors to Ford Motor Company, Dearborn, Mich.
Continuation of Ser. No. 947,283, Sep. 29, 1978, abandoned. This application Aug. 7, 1980, Ser. No. 176,222
Int. Cl.³ F41D *10/04*
U.S. Cl. 89—33 CA **8 Claims**

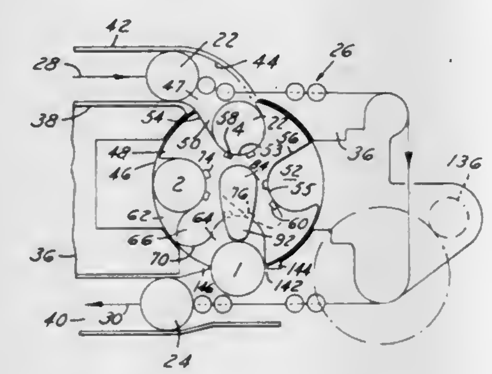

1. An article handling system comprising:
a frame member;
a work station connected to the frame member;
a conveyor means connected to the frame member for conveying articles;
means for feeding said articles from the conveyor means to the work station, the feeding means including:
a sprocket rotatably mounted about its central axis;
said sprocket having a receptacle slot at its perimeter for receiving an article from the conveyor means and a discharge slot circumferentially spaced from said receptacle slot;
a drive means for oscillating the sprocket about its central axis between a first position wherein said receptacle slot in its first position receives the articles from the conveyor means and a second position wherein said receptacle slot in its second position is in communication with the work station and the articles can pass from said receptacle slot to the work station and said discharge slot oscillates between a first position for receiving a used article from the work station and a second position for passing the used article through an outlet in the frame member;
said slots spaced about the sprocket such that the receptacle and discharge slots are in their respective first positions and second positions at simultaneous times;
an ejector cam which oscillates between two positions, the cam abuts the used article held in the discharge slot as the sprocket moves between its two positions to move the used articles radially outward from said discharge slot; and
a second drive means for oscillating the ejector cam.

4,373,423
GAS OPERATED MECHANISM HAVING AUTOMATIC PRESSURE REGULATOR
Wildey J. Moore, P.O. Box 4046, New Windsor, N.Y. 12550
Filed Jun. 2, 1980, Ser. No. 155,793
Int. Cl.³ F41D *5/08, 5/10*
U.S. Cl. 89—191 A **16 Claims**

1. In a gas operated firearm having an axially elongated barrel including a bore extending therethrough, means defining an annular gas chamber of variable volume surrounding an associated portion of the barrel and including a guide member mounted on the barrel and a first reaction member coaxially surrounding an associated portion of the barrel and supported for limited axial movement between first and second positions relative to the barrel, and means defining a gas port communicating with the bore and the gas chamber, said first reaction member being movable in one axial direction from its first to its second position in response to gas pressure within the chamber, the improvement comprising a second reaction member supported in coaxial surrounding relation to said barrel by said guide member for axial movement relative to said barrel and said first reaction member, said first and second reaction members having opposing reaction surfaces defining associated portions of said chamber, means for biasing said second reac-

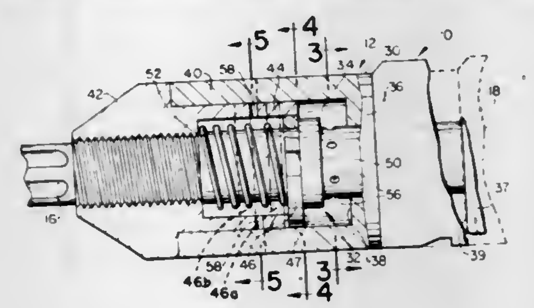

tion member in said one axial direction toward said first reaction member and to an inactive position, and means defining a vent for communicating with said chamber and the atmosphere to vent gases of explosion from said chamber, said vent means being normally out of communication with said chamber, said second reaction member being movable in opposition to said biasing means and in an axial direction opposite said one axial direction from said inactive position to another position in response to gas pressure within said gas chamber, said second reaction member being further movable in said opposite axial direction from said other position to a venting position in response to gas pressure within said chamber, said venting means being in communication with said chamber and with the atmosphere only when said second reaction member is in said venting position.

4,373,424
HYDRAULIC BOOSTER
Yoshiharu Adachi, Aichi, Japan, assignor to Aisin Seiki Kabushiki Kaisha, Aichi, Japan
Filed Sep. 3, 1980, Ser. No. 183,641
Claims priority, application Japan, Sep. 4, 1979, 54-113812
Int. Cl.³ F01B *25/02;* **F15B** *9/10*
U.S. Cl. 91—20 **9 Claims**

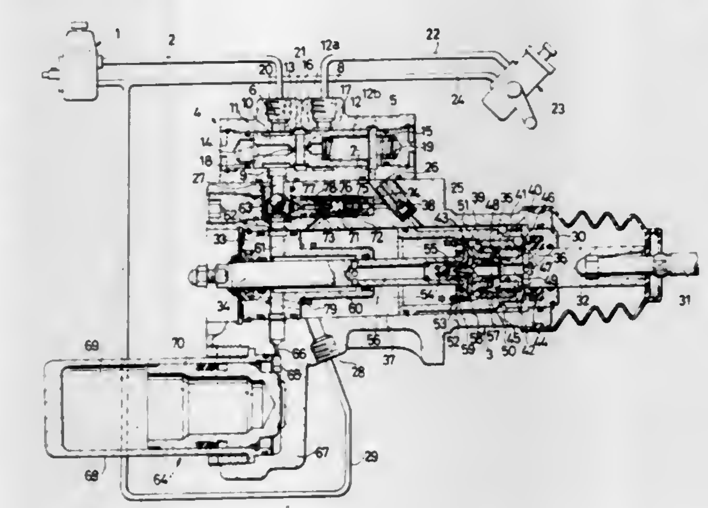

1. A hydraulic booster, comprising:
a hydraulic pump for producing a fluid discharge pressure;
a distributor valve casing having first and second outlet ports and an inlet port for receiving pressurized fluid from said pump;

a spool valve slidably fitted in said valve casing and comprising first and second lands for controlling the flow of fluid from said inlet port to said first and second outlet ports in a predetermined manner in response to pressure variations at said first and second outlet ports and a third land for raising the discharge pressure of said pump to a level considerably higher than the pressure at said first outlet port in response to a pressure increase at said first outlet port;
a cylinder body having a first inlet port communicating with said first outlet port of said distributor valve casing, a second inlet port supplied with the discharge pressure of said pump and an outlet communicating with a reservoir;
a power piston slidably fitted in said cylinder body and defining therein a pressure chamber and a drain chamber respectively communicating with said first inlet port and outlet of said cylinder body;
a valve member slidably mounted in said power piston;
a normally open valve including said valve member and further comprising an input piston which is operated by a driver;
passage means communicating said pressure and drain chambers with each other through said normally open valve;
a normally closed valve disposed within said power piston and adapted to be opened by said input piston through said valve member when said normally open valve is completely closed;
passage means communicating said second inlet port and said pressure chamber with each other through said normally closed valve; and an output rod connected to said power piston.

4,373,425
HYDRAULIC ENGINE
Georges Moatti, 17, rue Gutenberg, 92100 Boulogne sur Seine, France
Filed Jul. 1, 1980, Ser. No. 164,907
Claims priority, application France, Jul. 2, 1979, 79 17154
Int. Cl.³ F01L *21/04, 21/02, 25/02*
U.S. Cl. 91—227 **6 Claims**

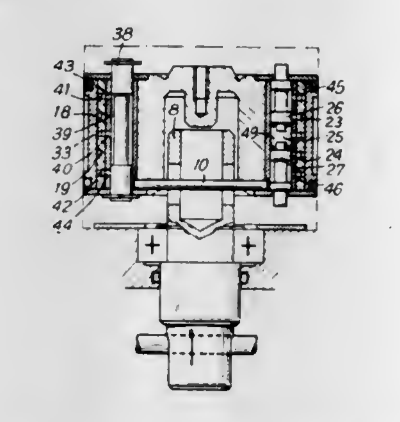

1. Hydraulic engine used in particular to drive a self-cleaning filter, which engine comprises a piston moving with an automatically controlled reciprocate motion, inside a cylinder into the walls of which issue a pressurized hydraulic fluid supply pipe and an exhaust pipe for said hydraulic fluid, said piston defining with the cylinder two chambers to receive the hydraulic fluid and comprising drive means parallel to the piston axis and sliding in said piston, said drive means ensuring the selective and successive communication of the supply pipe and exhaust pipe with each one of the chambers, via conduits provided inside the piston, said piston comprising a central core and a sleeve mounted in sealed manner on said core, said core being provided on its periphery with at least three annular grooved portions forming with the inside wall of the sleeve three annular fluid-tight grooves, the middle groove being in permanent communication with the exhaust pipe and the two adjacent grooves being in permanent communication with the supply pipe, whereas the middle groove and one of the two adjacent grooves are selectively and respectively connected with the two chambers of the cylinder via a slide valve mounted in the piston and forming part of said drive means, said valve comprising outlets respectively connected to the two chambers via conduits provided in the core of the piston and issuing on to each of the faces thereof.

4,373,426
ROTARY ACTUATOR
Paul P. Weyer, c/o Weyer Machine Co. Inc., 1462 Blake St., Enumclaw, Wash. 98022
Division of Ser. No. 960,043, Nov. 13, 1978, abandoned. This application Nov. 3, 1980, Ser. No. 203,156
Int. Cl.³ F15B *15/22;* **F01B** *3/00*
U.S. Cl. 91—396 **5 Claims**

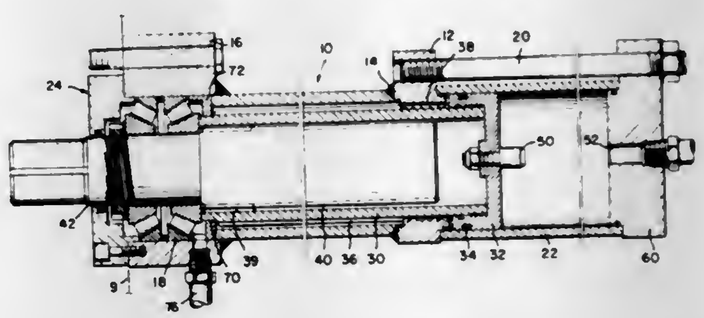

1. A helical rotary actuator comprising a cylindrical torque transmitting first section surrounding a linear-to-rotary force transmission chamber and a cylindrical second section, a base adapted to be secured to a support surface, said torque transmitting first section being rigidly secured to said base for transmitting reaction torque thereto, a separate, independent ring gear having teeth projecting radially inward of said torque transmitting first section into said chamber, and weld means integrally connecting said first section to said ring gear for transmitting torque between said ring gear and said first section,
said base including a bearing section having a bearing, a rotary output shaft in said bearing, piston means reciprocably mounted within one of said sections and helical spline means within said chamber drivingly interconnected to said ring gear, piston means and rotary output shaft for rotating said output shaft in response to reciprocation of said piston means.

4,373,427
FLUID PRESSURE CYLINDER
Venkat R. Garlapaty, Plymouth; Michael J. Hall, and William C. Branham, both of Wayzata, all of Minn., assignors to Tol-O-Matic, Inc., Minneapolis, Minn.
Filed Jan. 31, 1980, Ser. No. 117,347
Int. Cl.³ F01B *29/08*
U.S. Cl. 92—88 **25 Claims**

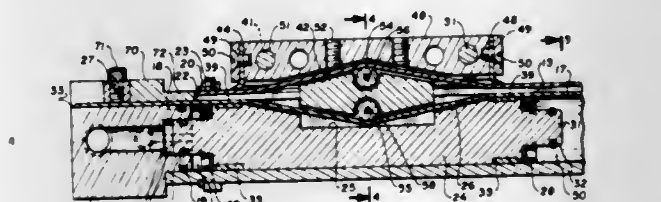

1. A fluid power cylinder comprising:
an elongated cylinder having a pair of pressure fluid chambers and an elongated slot of predetermined width extending generally parallel to the longitudinal axis of said cylinder, said cylinder further including a first pair of beveled cylinder edges joining the sides of said slot with the inner surface of said cylinder;
a piston reciprocally movable within said cylinder in re-

sponse to the introduction of fluid pressure in said pressure fluid chambers; and

an elongated inner strip seal member of greater width than said slot, said inner seal member including a laminated structure comprising a first layer of thin, non-elastic but flexible material and a second layer of magnetic material, said first and second layers being secured to one another, said inner seal member further having top and bottom generally flat surfaces parallel to one another and a first pair of beveled seal member edges for cooperating engagement with said first pair of beveled cylinder edges for successively sealing said slot during movement of said piston.

4,373,428

GLIDE SHOE OF A HYDRAULIC PISTON MACHINE

Hans J. Fricke, Stuttgart, Fed. Rep. of Germany, assignor to Robert Bosch GmbH, Stuttgart, Fed. Rep. of Germany

Continuation of Ser. No. 936,603, Aug. 23, 1978, abandoned. This application Dec. 22, 1980, Ser. No. 219,385

Claims priority, application Fed. Rep. of Germany, Nov. 11, 1977, 2750490

Int. Cl.³ F01B *31/10*

U.S. Cl. 92—159 **16 Claims**

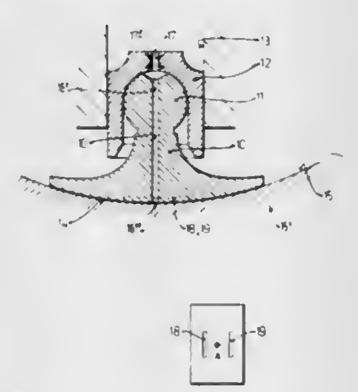

1. In a hydraulic piston machine of the type having a housing, a reciprocable piston in the housing, and a piston-reciprocating element having a glide surface and operating for reciprocating the piston, a combination comprising a glide shoe articulately connected to said piston and moving relative to the piston-reciprocating element in a first direction, said glide shoe having a glide face in sliding contact with said glide surface of the piston-reciprocating element, said glide shoe having at least one bore communicating with an interior of said housing and extending toward said glide face so that a working medium which flows through said bore causes build-up of a hydrostatic pressure between said bore and said glide surface of said piston-reciprocating element, said glide face being continuous and being interrupted only by recess means which occupies not more than a relatively small portion of said glide face and consists of an outlet of said bore which opens at said glide face of said glide shoe and, at least one groove which extends on said glide face of said glide shoe only in said first direction and is narrow in a second direction which is transverse to said first direction, so that the width of said groove measured in said second direction is considerably smaller than the length of the same measured in said first direction and no grooves extending in a direction other than said first direction are provided on said glide face, whereby a relatively high hydrodynamic pressure can build up between the remainder portion of said glide face of said glide shoe and said glide surface of said piston-reciprocating element during working movement of said glide shoe relative to the piston-reciprocating element.

4,373,429

STEAM SEALING STRIP FOR WATER BAKING PLATES

Franz Haas, Sr., Gerstlgasse 25, 1210 Wien; Franz Haas, Jr., Castellezgasse 32, 1020 Wien, and Johann Haas, Wiener Strasse 209-215, 2104 Spillern (NÖ), all of Austria

Filed Feb. 27, 1981, Ser. No. 238,679

Claims priority, application Austria, Feb. 27, 1980, 1086/80

Int. Cl.³ A47J *37/01*

U.S. Cl. 99—375 **18 Claims**

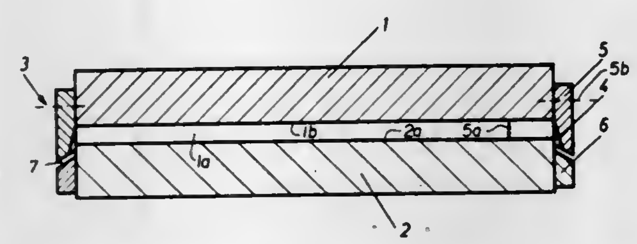

1. A steam sealing strip for closing open edges between opposed upper and lower cooperating wafer baking plates having opposed primary wafer baking surfaces spaced apart by a certain height, the primary wafer baking surfaces defining a primary wafer baking space between the wafer baking plates, the primary wafer baking space being for the baking of dough, the height between plates also being the height of the primary wafer baking space, which height does not include the depth of any engraving in the primary baking surfaces, the sealing strip comprising:

an upper sealing strip portion for coupling with the upper baking plate;

a lower sealing strip portion for coupling with the lower baking plate;

said upper sealing strip portion having a secondary baking surface facing said lower sealing strip portion;

said lower sealing strip portion having a secondary baking surface facing said upper sealing strip portion, said secondary baking surfaces of said upper and lower sealing strip portions being in opposed, spaced, face-to-face relationship and defining a gap therebetween;

a secondary baking space between said opposed surfaces of said sealing strip portions for receiving excess dough from between the baking plates and for baking the excess dough to prevent the formation of unbaked dough portions, said secondary baking space being defined by said gap between said secondary baking surfaces of said sealing strip portions; and

a plurality of steam channels in at least one of said sealing strip portions for releasing steam from between the wafer baking plates, said steam channels opening into said secondary baking space.

4,373,430

HUMIDIFIER FOR A PROOF BOX

Beverly J. Allen, Seattle, Wash., assignor to Oscar Lucks Company, Seattle, Wash.

Filed Oct. 2, 1978, Ser. No. 947,438

Int. Cl.³ H05B *1/00;* **A21C** *13/00*

U.S. Cl. 99—468 **10 Claims**

1. A fast warmup, high capacity humidifier for a proof box comprising:

(a) a heater pan means including:

(i) a heater pan having a base, a peripheral sidewall extending upwardly therefrom wherein said heater pan is adaped to receive and hold a shallow pool of water, and

(ii) an electric heating element means for heating at least substantially the entire said base to a temperature sufficient to vigorously boil at least substantially the entire said shallow pool of water to quickly produce large volumes of steam to quickly humidify the interior of said proof box during operation of the humidifier;

(b) a water supply means adapted for maintaining said shallow pool of water at a preselected depth during operation of the humidifier;

(c) a water supply conduit means adapted for conveying water from said water supply means to the interior of said heater pan means;

(d) support means for supporting said heater pan means for selective rotation about a horizontal axis;

(e) swivel coupling means located in said water supply conduit means between said water supply means and said heater pan means; and

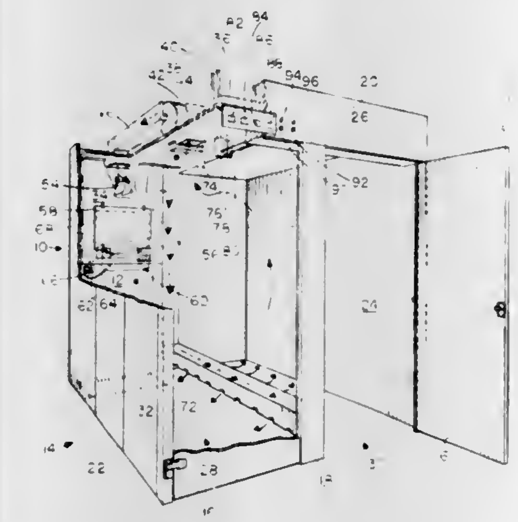

(f) a drip pan removably mounted to said support means beneath said heater pan;

wherein when it is desired to empty said heater pan means, such as for cleaning, said heater pan means may be rotated on said support means to dump the contents thereof into said drip pan, without the necessity of disconnecting said water supply conduit means.

4,373,431

APPARATUS FOR APPLYING A GRILL STRIPE TO A MEAT PRODUCT

William P. Wallick, 7478 W. 10th Ave., Lakewood, Colo. 80215, and George A. Gauthier, Arvada, Colo., assignors to William P. Wallick, Lakewood, Colo.

Filed Dec. 8, 1980, Ser. No. 214,187

Int. Cl.³ A47J *37/00*

U.S. Cl. 99—483 **23 Claims**

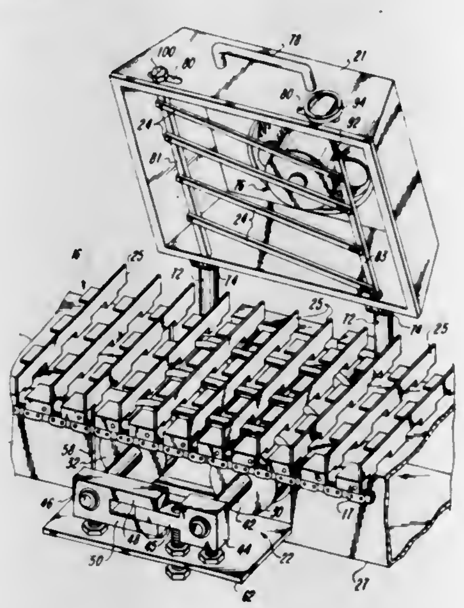

1. An apparatus for placing at least one grill stripe on a tubular meat product of circlar transverse cross section, said apparatus operably connected to a meat product conveyor so as to receive individual tubular meat products from said meat product conveyor, which meat product conveyor conveys said tubular meat products at incremental spaces along a predetermined path comprising, in combination:

means for scoring at least one grill stripe around the circumference of said meat product; and

means for placing said meat product into contact with said means for scoring said grill stripe, said means for placing said meat product into contact receives said meat product from said meat conveyor and moves said meat product translationally and rotationally along said means for scoring a grill stripe over a predetermined distance along said meat product conveyor.

4,373,432

TOP AND BUTT TRIMMER FOR PINEAPPLES

Masato Tsutsumi, Kahului, Hi., assignor to Maui Land & Pineapple Company, Inc., Kahului, Hi.

Filed Jul. 21, 1978, Ser. No. 927,132

Int. Cl.³ A23N *3/00, 4/20, 7/08*

U.S. Cl. 99—542 **7 Claims**

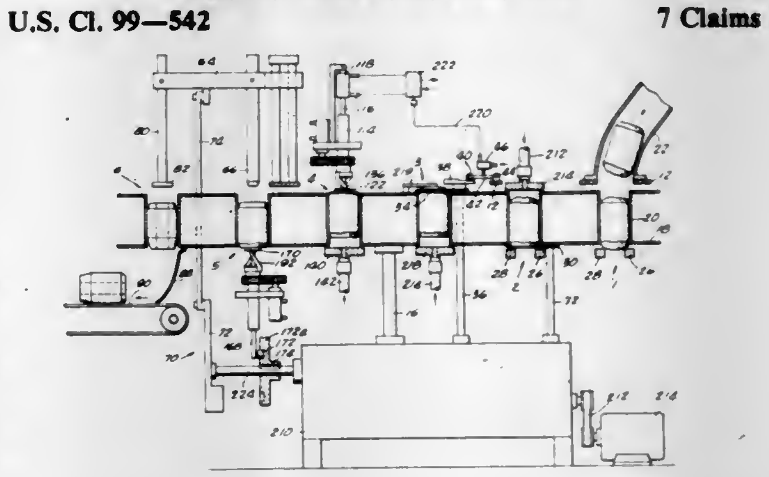

1. An improved Ginaca machine for the automatic processing of pineapples, comprising:

a turrent rotatable about a vertical axis, said turret having at least six barrels therein;

means for rotatably driving and indexing said turret whereby the barrels are temporarily and sequentially indexed at a plurality of processing stations;

feed means at the first of said stations for continuously introducing cylindrically pre-sized, partially skinned pineapples into a barrel of said turret;

first cutting means at the second of said stations for cutting an end of a pineapple, said means including a continuously rotating knife blade positioned adjacent a horizontal surface of said turret and moving parallel thereto, adjustable gauging means adjacent said turret at said station, and means for moving a pineapple cylinder in a barrel into contact with said gauging means;

second cutting means at the third of said stations for cutting the other end of a pineapple, said means including a continuously rotating knife blade positioned adjacent the opposite horizontal surface of said turret and moving parallel thereto, adjustable gauging means adjacent said turret at said station, and means for moving a pineapple cylinder in a barrel into contact with said gauging means;

first trimming means at the fourth of said stations for trimming remaining shell and blemishes from the corners of an end of a pineapple cylinder, said trimming means comprising a stationary trimming knife assembly including a rotating knife blade, and means for moving the pineapple cylinder in its barrel to engage said knife assembly;

second trimming means at the fifth of said stations for trimming remaining shell and blemishes from the corners of the other end of a pineapple cylinder, said second trimming means comprising a stationary trimming knife assembly including a rotating knife blade, means for coring said pineapple cylinder, and means for moving the same into engagement with said trimming knife assembly; and

means at the sixth of said stations for ejecting pineapple cylinders from the turret.

4,373,433

METHOD AND APPARATUS FOR DEWATERING SCREENINGS

Shigeki Kamei; Masamori Fushio, and Atuo Hirai, all of Amagasaki, Japan, assignors to Hitachi Kiden Kogyo, Ltd., Hyogo, Japan

Filed Jan. 26, 1981, Ser. No. 228,701

Int. Cl.³ B30B *3/04*

U.S. Cl. 100—37 **5 Claims**

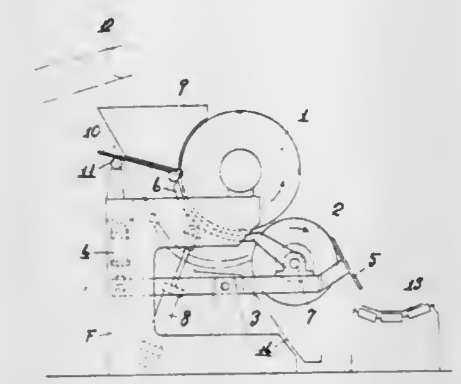

1. A method of dewatering screenings comprising the steps of: a preliminary dewatering by pushing a movable chute on which screenings are supplied against the outer circumferential surface of an upper dewatering roller and a secondary dewatering by compressing the preliminarily dewatered screenings between an upper dewatering roller and a lower dewatering roller which is arranged in such a position that it is backward at a certain angle in relation to the vertical line passing the center of the axis of the upper dewatering roller, both rollers being turned in the direction of catching screenings therebetween.

4,373,434

APPARATUS FOR THE EXPANSION OF OIL BEARING SEEDS

David G. Alexander, and Ian J. Woolley, both of Hull, England, assignors to Simon-Rosedowns Limited, Hull, England

Filed Nov. 24, 1980, Ser. No. 209,690

Int. Cl.³ B30B *9/18, 11/24*

U.S. Cl. 100—43 **7 Claims**

1. Apparatus for the expansion of oil bearing seeds of the kind comprising at least one screw rotatable in a barrel for conveying seed through the barrel from one end to the other, a die plate having orifices therein at the output end of the barrel and through which the seed material is extruded by the action of the screw or screws, a plurality of needles aligned with at least some of said orifices outside of said barrel and movable relative to the die plate thus to be inserted into the associated orifices at least partially to occlude same to enable the effective area of cross-section thereof to be varied.

4,373,435

CRUSHER AND SEPARATOR FOR CANS AND BOTTLES

John J. Grevich, Rte. 1, Box 34, Star Prairie, Wis. 54026

Filed Jan. 5, 1981, Ser. No. 222,666

Int. Cl.³ B30B *9/32*

U.S. Cl. 100—49 **13 Claims**

1. A crusher and separator for metal and glass containers, comprising

a crushing means for mashing such containers into scrap by reducing metal cans into flattened condition and glass bottles into small particles,

an inclined discharge chute below the crushing means receiving the scrap from the crushing means and having a bottom wall with a lower end and a revolving separating wheel at the lower end of the bottom wall, the wheel revolving on a horizontal axis below the bottom wall and transverse to the chute and the wheel having a portion of its periphery protruding upwardly of the lower end of the bottom wall to obstruct smooth sliding of the flattened cans down and off the chute and causing the flattened cans to hesitate, the wheel having a magnet on its periphery to adhere flattened steel cans thereto, the wheel propelling flattened aluminum cans from the chute, the bottom wall of the inclined chute having a glass discharging port therein directly below the crushing means and spaced along the chute above the lower end thereof, the wheel

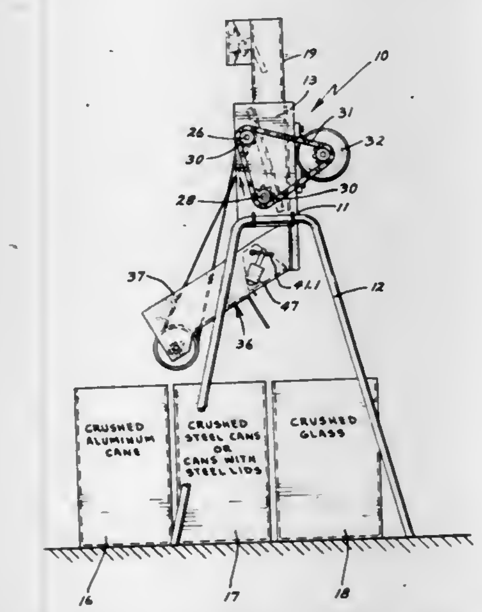

having upper and lower portions of its periphery, the chute being adjacent the upper portion of the periphery for delivering flattened cans thereto, there being open and unobstructed space adjacent the lower portion of the periphery of the wheel to permit all flattened cans to move downward adjacent the lower portion of the periphery of the wheel,

a deflector beneath the lower end of the bottom wall and adjacent the periphery of the separating wheel to knock the steel cans off the revolving wheel and magnet, the steel cans dropping at a location spaced from the discharging of the aluminum cans,

and a movable gate traversing the glass discharging port and allowing crushed cans to slide thereover to the separating wheel, the gate being movable to open the port and permit glass particles to fall through at a location spaced from the dropping of the steel cans.

4,373,436

AXIALLY ALIGNED DRIVING CAM IMPRINTER

James L. Shenoha, Lockport, Ill., assignor to Norwood Marking & Equipment Co., Inc., Downers Grove, Ill.

Filed Jun. 11, 1980, Ser. No. 158,632

Int. Cl.³ B41F *31/16, 1/00*

U.S. Cl. 101—27 **4 Claims**

1. In an intermittent imprint marker including base means, a reciprocatably movable marker head block, an opposed anvil, tape supply and take-up reels, a power member moved cam slot member having a first cam slot for driving a follower operably affixed to the head block, and a second cam for driving a tape advance drive roller, the improvement of a projecting shaft on the head block, a slot opening extending through the shaft spaced from the head block, the cam slot member projecting through the slot opening normal to the direction of reciprocal movement of the head block, the first cam slot aligned with the slot opening, a cam follower affixed to the shaft positioned in the first cam slot, the second cam being spaced from the first cam slot, and bearing means supporting the cam slot member, said bearing means including a bearing member having spaced parallel legs with opposed grooves

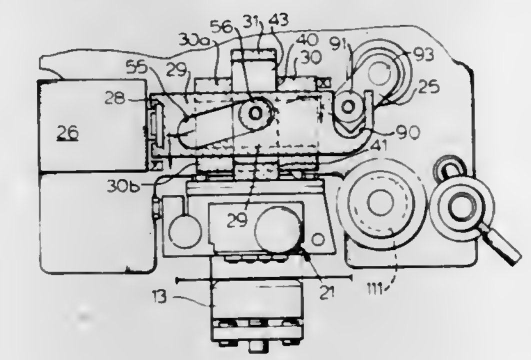

therein and aligned openings therethrough, said shaft extending through the aligned openings and restrained against lateral movement thereby, the cam slot member received in the opposed grooves and retained against non-linear movement thereby, the slot opening and cam slot member cooperating to prevent rotation of the shaft.

4,373,437

APPARATUS TO SUPPLY ARTICLES FOR PRINTING

Ralph L. Rodenbaugh, Pittsburgh, and John M. Zwigert, Cabot, both of Pa., assignors to Deco Coatings Corporation, Pittsburgh and Carl Strutz & Company, Inc., Mars, both of, Pa.

Filed Dec. 19, 1980, Ser. No. 218,417

Int. Cl.³ B41F *17/00*

U.S. Cl. 101—35 **10 Claims**

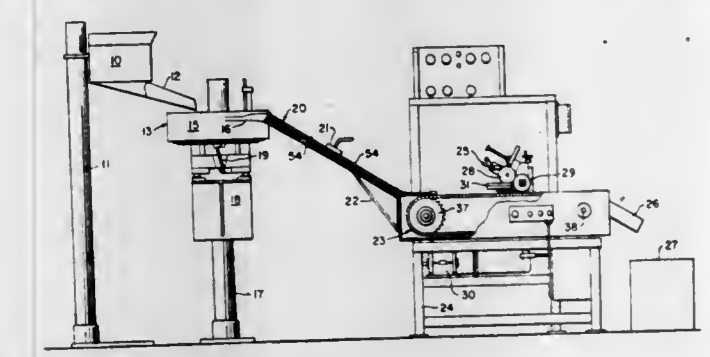

1. Apparatus to supply articles in succession to a printing station, said apparatus including a conveyor having spaced-apart attachment members extending from the top of pivotally-joined links engageable with a support for movement from an article-loading station to beyond said printing station, a drive coupled to at least one of two sprockets engaging the links at opposite ends of the conveyor, a supply chute inclined at an acute angle to the horizontal and including an article guide extending to said loading station, an article-constraining member with a yieldable end section extending from said article guide beyond the terminal end thereof and over the initial part of said conveyor for restraining an article against advancement from the article-loading station, said yieldable end section being normally spaced from the top of an attachment member while located at the loading station by a distance less than the height of the articles in the supply chute for restraining an article against advancement from the loading station toward the printing station until an underlying attachment advances to engage the article whereupon the yieldable end section permits falling of the article onto the conveyor between attachments for advancement of the article to the printing station, means to deliver a succession of abutting articles to said supply chute, and printing means at said printing station operative in a timed relation with movement of said conveyor to print indicia upon the articles when carried by said conveyor.

4,373,438

DOT PRINTER

Kenichiro Arai, Shiojiri, Japan, assignor to Shinshu Seiki Kabushiki Kaisha, Nagano and Kabushiki Kaisha Suwa Seikosha, Tokyo, both of, Japan

Filed Dec. 24, 1980, Ser. No. 219,741

Claims priority, application Japan, Dec. 28, 1979, 54-172230

Int. Cl.³ B41J *3/12*

U.S. Cl. 101—93.04 **17 Claims**

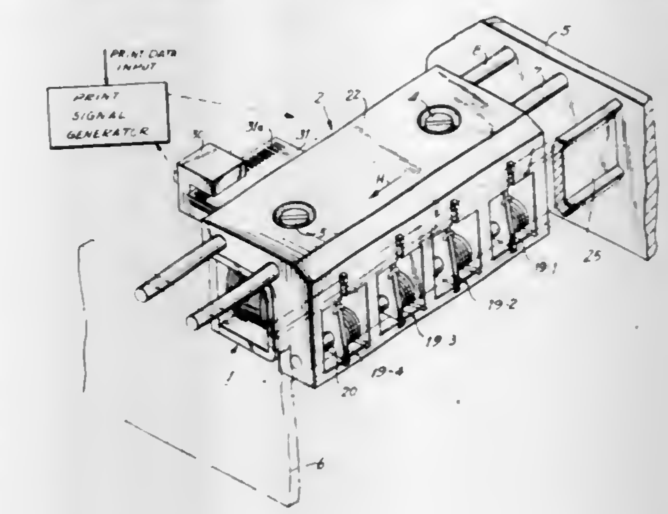

1. A dot printer for printing on a recording media using a matrix of dots comprising:

a carriage, said carriage being supported for reciprocal motion in a lateral direction;

at least one printing lever, each printing lever including a printing surface for impacting said medium for printing, and a bearing surface, said at least one printing lever being pivotably mounted and connected to said carriage for lateral movement therewith;

electromagnetic means associated with each said at least one printing lever, each said electromagnetic means including a movable plunger, a wire connected at one end to said plunger for movement therewith, the other end of said wire engaging said bearing surface of said printing lever, a coil frame having a coil core and a coil mounted thereon, energization of said electromagnetic means causing said movable plunger to be attracted to said coil core, said printing means pivoting and impacting said printing surface against said printing medium, said electromagnetic means being mounted on said carriage and moving therewith;

individual spring means associated with each said at least one printing lever, one end of said spring means being connected to said carriage, the other end of each said spring means being connected to one of said at least one printing levers and biasing said printing lever in a position away from said recording medium,

said wire operating in opposition to said spring means when said electromagnetic means is energized, printing of said medium being done at a plurality of lateral positions.

4,373,439

CHARACTER RING-SELECTING TYPE PRINTER

Hitoshi Mikoshiba, Shiojiri, Japan, assignor to Shinshu Seiki Kabushiki Kaisha, Nagano and Kabushki Kaisha Suwa Seikosha, Tokyo, both of, Japan

Filed Dec. 16, 1980, Ser. No. 216,900

Claims priority, application Japan, Dec. 17, 1979, 54-163692

Int. Cl.³ B41J *9/12*

U.S. Cl. 101—93.09 **9 Claims**

1. A character ring selecting type printer for printing on a print media, comprising:

a plurality of character rings mounted for rotation, each said character ring having at least two character columns on the periphery thereof, said columns being laterally separated;

means for rotating said character rings;
individual means for stopping each said character ring in any selected rotational position;
pressing means for simultaneously pressing against each said character ring for printing while said character rings are stopped, said pressing means always operating simultaneously, when pressing, said pressing means pressing only a first one of said at least two character columns on each said character ring at any one time;

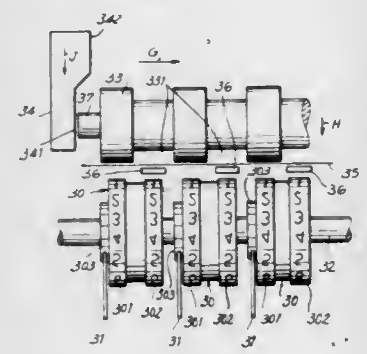

means for laterally translating said pressing means from a position in which each pressing means is positioned adjacent one character column on a character ring to a position in which each pressing means is adjacent another character column of the same character ring, said translated pressing means when pressing, always simultaneously pressing for printing only said another one of said at least two character columns on each said character ring.

4,373,440
HAMMER BANK ASSEMBLY
Val K. Jezbera, 642 Encino Vista Dr., Thousand Oaks, Calif. 91360
Filed Aug. 13, 1979, Ser. No. 65,766
Int. Cl.³ B41J *9/30*
U.S. Cl. 101—93.34 **21 Claims**

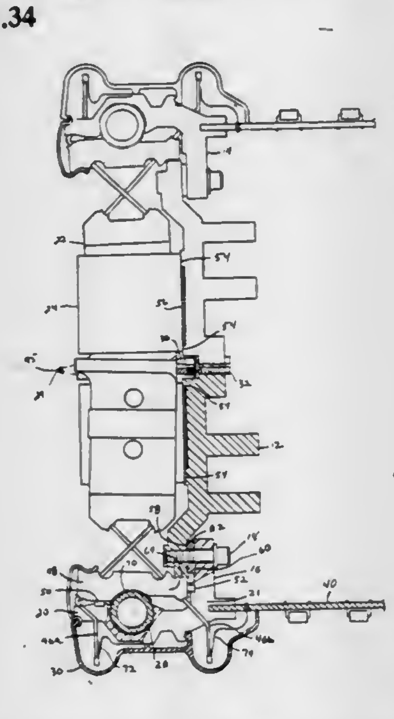

1. A hammer bank mounting assembly for accurately mounting a plurality of print hammers of the type having an impact tip and a flat coil section supported by a pair of crossed spring wires which extend through a foot member, comprising:
an elongated metal frame having a planar frontal region to which a plurality of spaced parallel magnets can be attached, a bottom planar edge which is accurately spaced and aligned with respect to said frontal region, and a rear mounting plane which is accurately spaced and aligned with respect to said frontal region;
an elongated first shoe member having a generally L-shaped cross section including an upwardly extending arm attached to said frame, said arm including a mounting plane which is accurately spaced and aligned with respect to said rear mounting plane, and a generally horizontal section which projects forwardly from said frame below said bottom edge, said horizontal section having a channel extending along the length thereof; and
a rigid elongated rod extending along the length of the channel, said rod being accurately spaced and aligned with respect to the mounting plane of the arm of said shoe member, the foot members of said print hammers being securable to said assembly parallel to one another and perpendicular to said rod and in contact with said rod and said bottom edge to achieve accurate alignment of said hammers.

4,373,441
HEATABLE SIEVE FOR SCREEN PRINTING
Elmar Messerschmitt, Paul-Hösch-Str. 13, 8000 München 60, Fed. Rep. of Germany
PCT No. PCT/EP80/00023, § 371 Date Dec. 23, 1980, § 102(e) Date Dec. 12, 1980, PCT Pub. No. WO80/02257, PCT Pub. Date Oct. 30, 1980
PCT Filed Apr. 23, 1980, Ser. No. 227,072
Int. Cl.³ B05C *17/06, 17/08*
U.S. Cl. 101—127.1 **7 Claims**

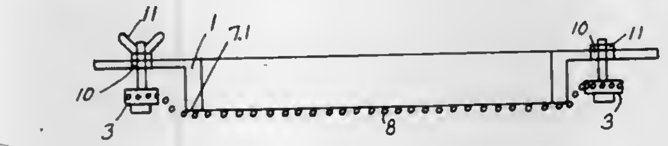

1. A screen printing assembly for use with thermoplastic inks comprising a supporting frame having opposite frame rail portions, thermoplastic synthetic resin material on said frame rail portions, a printing screen of electrically conducting material which can be heated by transmitting electrical current therethrough, said screen having relatively low-resistance opposite portions of increased conducting cross-sectional area overlying, in contact with, and thermoplastically secured on said synthetic resin material, the remainder of the screen between said low-resistance portions being of higher resistivity and being spaced from said resin material, and respective terminal means on said low-resistance portions for connecting a source of electrical current to said screen to heat the screen, whereby to cause the screen portion between the low-resistance portions to be heated to a working temperature responsive to the connection of a source of current to said terminal means, while said low-resistance portions thermoplastically secured on said synthetic resin material are heated to a lower temperature and are relatively cool so as to prevent melting of the resin material, and wherein said low-resistance portions comprise metallic plating on the screen.

4,373,442
PORTABLE INK FOUNTAIN
Harold P. Dahlgren, 4008 Buena Vista, Dallas, Tex. 75205; William A. Sullivan, 3821 Grand Teton Crt., Irving, Tex. 75062; John W. Gardiner, 3028 White Oak La., Bedford, Tex. 76021, and James E. Taylor, 4129 Drowsy La., Dallas, Tex. 75233
Filed Nov. 3, 1980, Ser. No. 203,662
Claims priority, application PCT Int'l Appl., Nov. 5, 1979, PCT/US79/00947
Int. Cl.³ B41F *31/06, 31/12, 31/32, 7/26*
U.S. Cl. 101—207 **4 Claims**

1. A method of metering ink which is to be applied by a roller apparatus to a printing plate wherein the roller apparatus is rotated such that its surface speed is substantially equal to the surface speed of the printing plate, the improvement comprising: positioning a metering roller, which is positively driven by a variable speed drive, in pressure indented relation with the roller apparatus to form an ink metering nip; supplying ink from first and second rollers to the ink metering nip; rotating said first and second rollers by frictional force from said metering roller such that adjacent surfaces move in the same direction to form a film of ink on the metering roller; positioning the metering roller in pressure indented relation with the roller apparatus; and rotating the ink metering roller such that the surface speed thereof is less than the surface speed of the roller apparatus, said roller apparatus including at least one transfer roller which is frictionally driven at a surface speed which is greater than the surface speed of the metering roller.

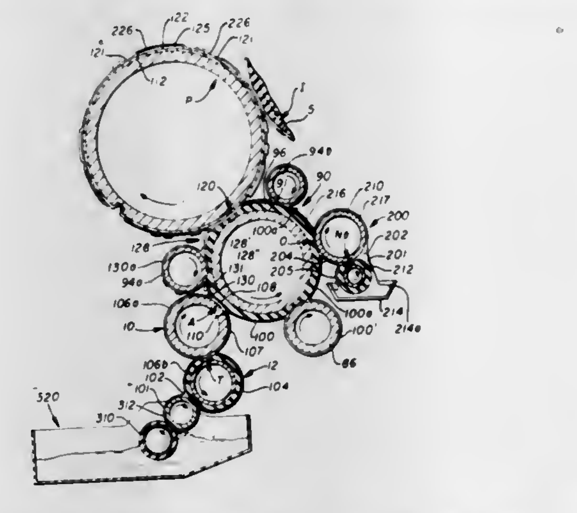

4,373,443
METHOD OF HIGH VISCOSITY INKING IN ROTARY NEWSPAPER PRESSES
Harshad D. Matalia, Easton, Pa., and Menashe Navi, New York, N.Y., assignors to American Newspaper Publishers Association, Easton, Pa.
Continuation of Ser. No. 122,105, Feb. 15, 1980, abandoned. This application Nov. 18, 1981, Ser. No. 322,603
Int. Cl.³ B41F *31/04, 31/06, 31/26*
U.S. Cl. 101—221 **1 Claim**

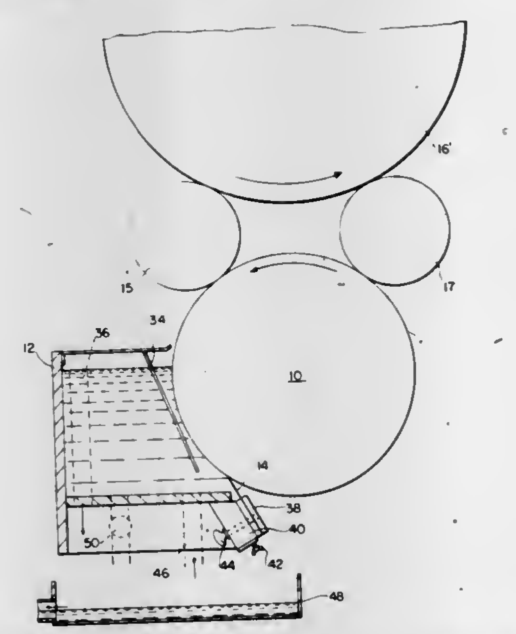

1. Method of enhancing high viscosity inking in a rotary newspaper letterpress system of the type applying high viscosity ink to both sides of the web with dual inking components, each component having an ink reservoir with an inking cylinder rotably positioned therein, two form rollers rotatably contacting said inking cylinder, a plate cylinder independently contacting said form rollers and an impression cylinder contacting one side of a moving newspaper web against the plate cylinder comprising:
A. Defining a plurality of ink repository cells conformed as truncated pyramids within the surface of each inking cylinder such that there are 200–360 cells per linear inch;
B. Immersing said repository cells by rotating each said inking cylinder within its ink reservoir where the ink has a hydrocarbon base and a viscosity in the range 2,000–2,500 centipoises;
C. Reverse angle scraping of excess ink from the surface of each said inking cylinder;
D. Further rotating each inking cylinder and repository cells against the surfaces of each pair of form rollers and rotating said form rollers against each plate cylinder;
E. Printing by rotating said plate cylinders against both sides of a newspaper web moving over the surface of a rotating impression cylinder such that the speed of rotating said inking cylinder, plate cylinder and impression cylinder is at speed of printing up to 3,000 lineal feet per minute; and
F. Sequentially immersing each inking cylinder within each said reservoir.

4,373,444
LABEL WEB OVER-PRINTER
Harry Cunnington, Boston, England, assignor to Norcros Investments Limited, Reading, England
Filed Oct. 27, 1980, Ser. No. 201,275
Claims priority, application United Kingdom, Oct. 31, 1979, 7937804
Int. Cl.³ B41F *5/00, 13/04*
U.S. Cl. 101—228 **1 Claim**

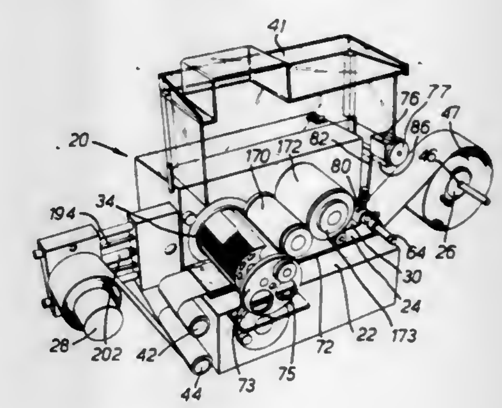

1. In a label over-printer
a label web reel holder,
a frame of the over-printer mounting the reel holder,
guide means for guiding the label web from the reel,
said guide means being adjustable and adjacent one edge of the web,
a releasable brake pad operative on the upper face of the label web as it is drawn from the reel through the guide means,
a printing mechanism downstream of the guide means including
a rotary type drum having extruded groups of rails for receiving printing indicia accommodated in at least one axially extending recess in the periphery of the drum,
a rotary platen freely-rotatable and co-operating with the type drum,
means eccentrically mounting the platen whereby printing pressure between the type drum and the platen can be adjusted,
cam means secured for rotation and co-axial with the type drum,
further cam means synchronously driven in the opposite sense of the cam means of the type drum and arranged to co-operate therewith to index the web intermittently through the printing mechanism, and
an ink roller co-operating with said printing indicia, said roller incorporating
a multiplicity of discs of ink-absorbent paper arranged as a stack, and means at each end of the stack clamping the discs together,
reciprocating indexing means for providing fine adjust-

ment of the indexing stroke of the label web through the over-printer,
guide rollers operable on the printed web of labels after the printing mechanism,
a web take-up reel mounted on the frame after the said guide rollers, and
means for positively driving said take-up reel to wind the printed web on the reel.

4,373,445
DOCTOR BLADE CONSTRUCTION FOR PRINTING MACHINE
Ingo Köbler, Gessertshausen, Fed. Rep. of Germany, assignor to M.A.N.-ROLAND Druckmaschinen Aktiengesellschaft, Offenbach am Main, Fed. Rep. of Germany
Filed May 27, 1981, Ser. No. 268,095
Claims priority, application Fed. Rep. of Germany, May 29, 1980, 3020306
Int. Cl.³ B41F *31/04*
U.S. Cl. 101—365 **7 Claims**

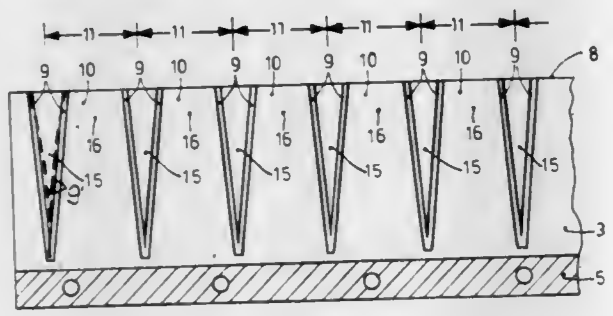

1. Elongated doctor blade for use in the inking system of a printing machine having
a clamping zone (4) extending in the direction of elongation of the doctor blade and at an extremity along the length of the doctor blade;
a working zone, projecting transversely to the direction of elongation of the doctor blade and extending from the clamping zone (4) and terminating in a working edge at said other extremity of the doctor blade;
and grooves (9) formed on the surface of the doctor blade starting at the working edge, and extending towards the clamping zone and subdividing the blade into a plurality of individually positionable interconnecting zones, each of which can be individually adjusted with respect to an ink duct roller (2) of the printing machine
wherein, in accordance with the invention,
the plurality of grooves (9) are arranged in pairs, the two grooves of each pair separating the zones (10) from each other and extending, in addition to the direction from the working edge (8) towards said clamping zone, at an inclination towards each other to converge in V-formation and merging into each other at the apex of the V with the open part of the V formation located at the working edge and the apex thereof spaced from the working edge towards the clamping zone.

4,373,446
BEARING ADAPTER FOR RAILROAD TRUCKS HAVING STEERING ARMS
Geoffrey W. Cope, Williamsville, N.Y., assignor to Dresser Industries, Inc., Dallas, Tex.
Filed Jul. 28, 1980, Ser. No. 172,895
Int. Cl.³ B61F *3/08, 5/30, 5/38, 5/50*
U.S. Cl. 105—224.1 **5 Claims**

1. In a truck for a railway vehicle, a set of wheels and an axle rigidly joining said wheels, bearing assembly at each end of said axle, a first side frame having pedestal jaws accommodating therebetween one of said bearing assemblies, a second side frame having pedestal jaws accommodating the other bearing therebetween, said bearing assemblies each including a bearing adapter member and a steering arm for radially steering said truck operatively connected to said axle wherein said adapter member includes a main body portion underlying the roof of said pedestal jaws of said side frame and an extension section extending axially inward from said main body portion toward

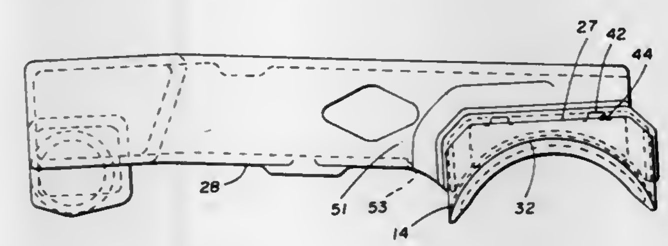

the center of said truck parallel to said axle and having an upwardly facing generally planar surface underlying said steering arm, and means maintained in compression for connecting said steering arm to said surface whereby the arm is supported on the surface.

4,373,447
RAIL VEHICLE PASSENGER BODY
Johann K. Pfister, Dietlikon, Switzerland, assignor to Schweizerische Lokomotiv und Maschinenfabrik, Winterthur, Switzerland
Continuation of Ser. No. 832,898, Sep. 13, 1977, abandoned. This application Dec. 21, 1979, Ser. No. 105,867
Claims priority, application Switzerland, Sep. 16, 1976, 11730/76
Int. Cl.³ B61D *1/00, 17/10, 17/12*
U.S. Cl. 105—399 **11 Claims**

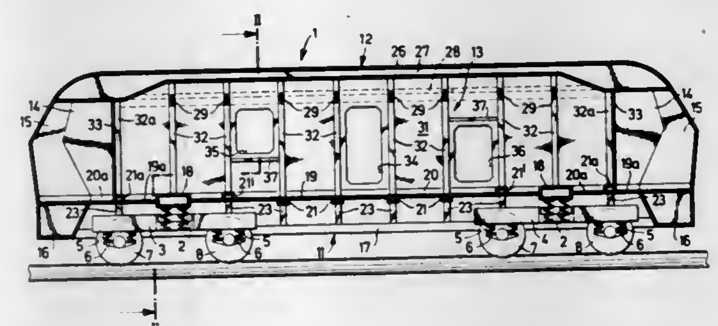

1. A rail drive vehicle body comprising
a base;
a roof having a plate covering the whole of the vehicle body;
at least one load-bearing frame secured to and between said base and said roof, said bearing frame being disposed within the middle third of the rail vehicle body width and extending longitudinally of the body, said base, roof and bearing frame defining a unitary load bearing section member;
a plurality of transversely disposed longitudinally spaced horizontal expansion plates connected to and between respective edges of said roof plate and said bearing frame; and
a pair of mounted side walls disposed between said base and said roof longitudinally of the rail vehicle body.
9. A rail drive vehicle body comprising
a base extending over the width of the vehicle body;
a roof having a curved plate with depending longitudinal edges covering the whole of the vehicle body;
at least one load-bearing frame secured to and between said base and said roof, said bearing frame being disposed within the middle of the rail vehicle body width and extending lontidudinally of the body;
a plurality of transversely disposed longitudinally spaced horizontal expansion plates connected to and between respective edges of said roof plate and said bearing frame;
said base, roof, bearing frame and plates defining a unitary load bearing section of generally I-shaped cross-section; and
a pair of mounted side walls disposed between said base and said roof longitudinally of the rail vehicle body.
10. A rail drive vehicle body comprising
a base extending across the width of the vehicle body;
a roof having a plate covering the whole of the vehicle body;
at least one load-bearing frame secured to and between said base and said roof, said bearing frame being disposed within the middle third of the rail vehicle body width and extending longitudinally of the body,
said base, roof and bearing frame defining a unitary bearing section member;
a plurality of transversely disposed longitudinally spaced horizontal stiffening plates connected to and between respective edges of said roof plate and said bearing frame, said plates being vertically rigid and stiff, and resilient lengthwise to the vehicle body whereby the entire roof is operative as a bearing element; and
side walls removably mounted between said base and said roof longitudinally of the rail vehicle body.

4,373,448
SHELF ASSEMBLY AND BRACKET THEREFOR
Frank Pallotta, Mississauga, Canada, assignor to DSH, Concord, Canada
Filed Feb. 20, 1981, Ser. No. 236,328
Int. Cl.³ A47B *41/04*
U.S. Cl. 108—29 **6 Claims**

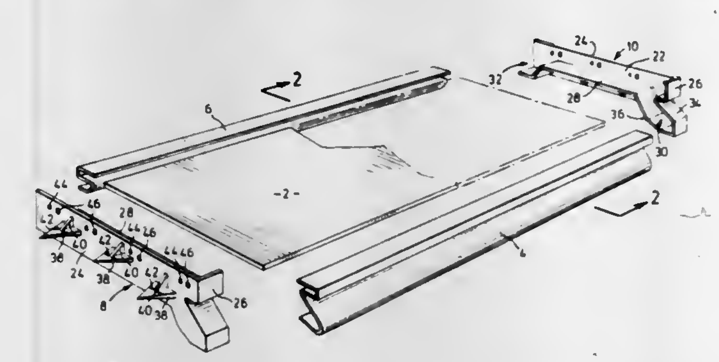

1. A combined shelf and hanger bar system for a closet comprising a planar shelf panel, a rear shelf rail the same length as the panel and engageable therewith to receive and support the rear edge of the panel, the rear shelf rail having a cross section having an upper portion receiving the rear edge of the panel and a reinforcing depending portion, a front shelf rail the same length as the panel and engageable therewith to receive and support the front edge of the panel, the front rail having a section including an upper portion engaging a front edge of the panel and a depending portion having an upturned flange for supporting garment hangers, and a pair of unitary moulded end brackets each having a wall plate having a wall engaging surface extending perpendicular to the shelf and to the rails and means to enable its attachment to a wall, and a flange extending perpendicularly from its opposite surface and having a horizontal centre portion forming an upwardly open ledge, engageable with the underside of one end of the shelf panel, and end portions defining a deep front upwardly open pocket and a shallow rear upwardly open pocket each extending downwardly relative to the ledge and engageable with the ends of the depending portions of the front and rear rails respectively.

4,373,449
LITERATURE SHELVING
Gerald R. Klaus, St. Charles, and Thomas E. Williams, Schaumburg, both of Ill., assignors to Fellowes Manufacturing, Itasca, Ill.
Continuation-in-part of Ser. No. 111,709, Jan. 14, 1980, abandoned. This application Jun. 16, 1980, Ser. No. 159,458
Int. Cl.³ A47B *57/00*
U.S. Cl. 108—60 **12 Claims**

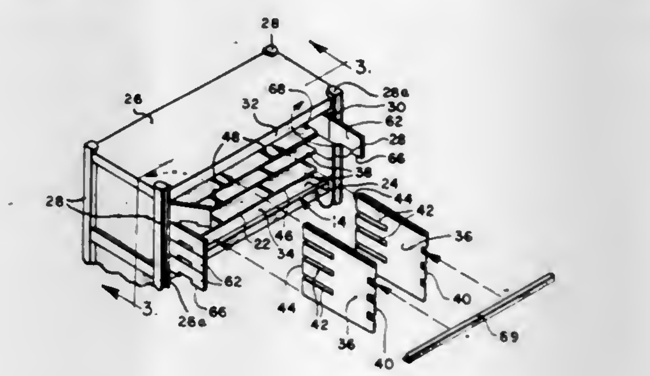

1. A multiple-partitioned shelf unit comprising:
a rigid shelf having a shelf open end comprising a four-sided, substantially horizontal floor, a four-sided, substantially horizontal ceiling, and means supporting said ceiling above said floor, said means including two spaced-apart upstanding members defining therebetween the horizontal extent of said shelf open end, wherein said ceiling further includes a downwardly-extending lip, the free end of said lip and floor defining therebetween the vertical extent of said shelf open end;
a fiberboard shell having an upstanding rear panel hingedly connected to two upstanding side panels opposite free ends of said side panels, said shell being positioned within said shelf with said rear panel rearward of said shell open end and said free ends of said side panels each disposed at opposite ends of said horizontal extent of said shelf open end, each adjacent and inward of one of said upstanding members, and at least a portion of each of said side panels extending behind said lip; and
means forming fiberboard compartments open to said shelf open end wherein said compartment-forming means extend between said side panels and, together with said adjacent upstanding member, said lip and side rear panel, hold said side panels in a stationary upright position.

4,373,450
DISKETTE SAFE
Norman Miller, and John F. McKinnis, Jr., both of Lafayette, Ind., assignors to Schwab Safe Co., Inc., Lafayette, Ind.
Filed Nov. 24, 1980, Ser. No. 209,422
Int. Cl.³ E06B *7/16*
U.S. Cl. 109—75 **9 Claims**

1. A safe for protecting the contents against high temperature and humidity comprising:
a cabinet having an interior storage space and a door opening;
a layer of insulation lining said storage space;
a layer of wax within said insulation layer for melting to absorb heat energy;
a drawer for holding said contents;
means for mounting said drawer for sliding movement in and out of said storage space through said door opening;
an inner door means mounted on said drawer for providing an inner seal in said door opening when said drawer is in said storage space;

means for locking said inner door means in sealing relation in said door space; and

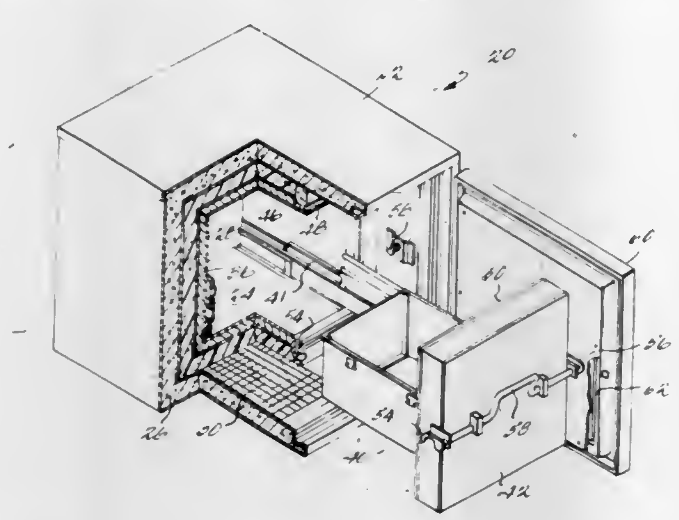

a hinged outer door for providing an outer seal of said door space.

4,373,451
APPARATUS AND METHOD FOR FEEDING PULVERIZED SOLID FUEL TO A BURNER
Kenneth L. Gardner, Riverside; Edward Gootzait, Lewisburg; Edward T. Maciejewski, Catawissa, and Donald L. Fisher, Milton, all of Pa., assignors to Kennedy Van Saun Corporation, Danville, Pa.
Filed Apr. 6, 1981, Ser. No. 251,498
Int. Cl.³ F23K *3/00*
U.S. Cl. 110—101 CC **12 Claims**

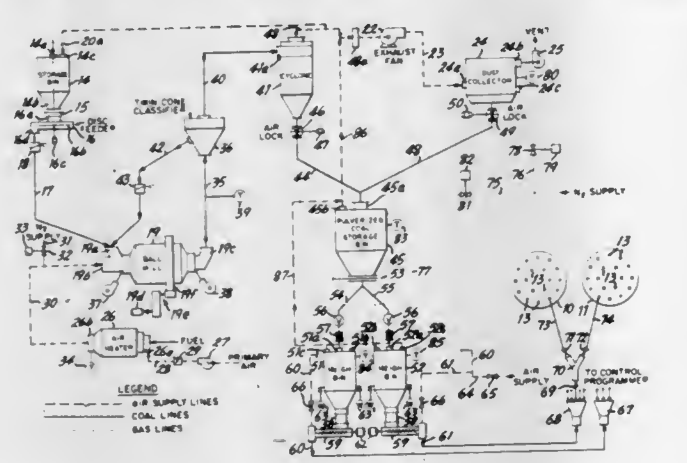

1. An apparatus for feeding pulverized solid fuel to the burners of a kiln comprising distributing means for distributing pulverized solid fuel into a plurality of fuel streams, means for weighing pulverized fuel in each stream, a plurality of air conduits for receiving pulverized fuel therein from said streams and supplying an air-fuel mixture to burners in different regions of the kiln and a driven fuel feed means for feeding the pulverized fuel from each stream to an air conduit at a rate controlled by the respective weighing means.

4,373,452
WOOD BURNING STOVE
Robert V. Van Dewoestine, Corning, N.Y., assignor to Corning Glass Works, Corning, N.Y.
Continuation-in-part of Ser. No. 173,155, Jul. 28, 1980. This application Mar. 1, 1982, Ser. No. 353,834
Int. Cl.³ F23J *15/00*
U.S. Cl. 110—203 **16 Claims**

1. In a woodburning stove of the type having:
a combustion chamber, and
a flue for removing exhaust from said chamber, the improvement comprising:
a catalytic converter means for oxidizing oxidizable species in said exhaust, said catalytic converter means comprising a honeycomb structure having a plurality of mutually parallel catalytic cells, each having a flow length oriented in the direction of the flow of said

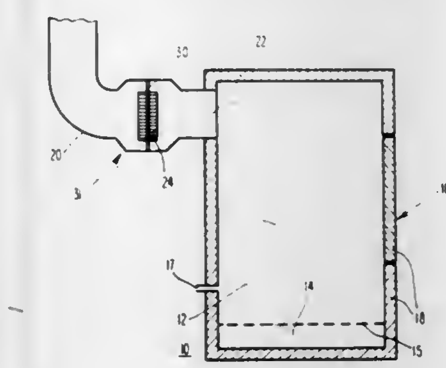

exhaust, and a volume (V) in cubic inches expressed as a function of the cell density (N) of said cells in cells per square inch in a direction perpendicular to said flow being at least:

$$V = \frac{1.35}{N^2} + \frac{400.34}{N} - 0.013.$$

4,373,453
APPARATUS AND METHOD FOR UTILIZING HOT WASTE GASES
Samuel Foresto, 243 Willis Ave., Mineola, N.Y. 11501
Continuation-in-part of Ser. No. 221,974, Jan. 2, 1981, Pat. No. 4,317,417. This application Sep. 16, 1981, Ser. No. 302,487
Int. Cl.³ F23J *3/00*
U.S. Cl. 110—216 **53 Claims**

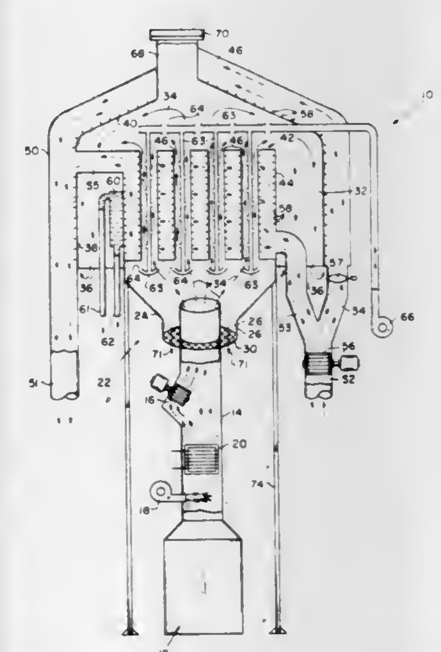

1. An apparatus for utilizing waste gases comprising
a source in which waste gases are produced,
heat extractor means for extracting heat from the waste gases,
a clean air chamber through which clean air is flowed,
flue means for conducting the hot waste gases to cause the same to flow from the head of said flue means directly from said source into said heat extractor means,
said heat extractor means including means to direct the hot waste gases to pass therethrough in heat exchange relation with said clean air chamber to heat the clean air flowing through said clean air chamber and thereafter to exhaust said waste gases normally from said heat extractor means to the atmosphere in a downward direction of flow,

and a flow passage means providing an opening to the atmosphere and through which the waste gases flow from said apparatus to the atmosphere from between said flue means and said heat extractor means when pressure in said heat extractor means exceeds the pressure of the hot waste gases from said flue means.

4,373,454
OIL SHALE RETORTING AND COMBUSTION SYSTEM
Augustine A. Pitrolo, Fairmont; Joseph S. Mei, Morgantown, both of W. Va., and Jerry Y. Shang, Fairfax, Va., assignors to The United States of America as represented by the Department of Energy, Washington, D.C.
Filed Aug. 28, 1981, Ser. No. 297,307
Int. Cl.³ F23B *1/06, 1/38, 5/02;* **F23D** *1/02*
U.S. Cl. 110—347 **2 Claims**

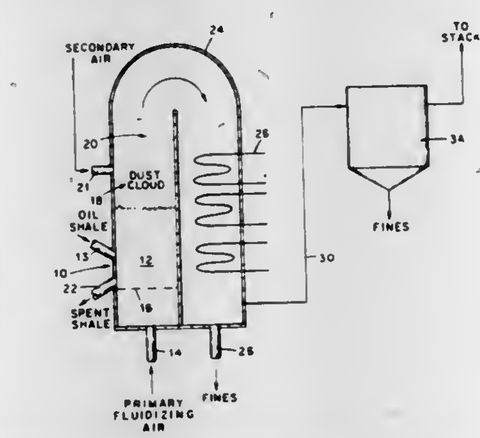

1. A method for extracting energy values from oil shale having substantial concentrations of calcium carbonate therein, comprising the steps of heating particulate oil shale in a retorting zone in a bed reactor, fluidizing the contents in said zone with air having an oxygen content of about stoichiometric and sufficient to provide for the heating of oil shale to a temperature adequate to thermally decompose the organic hydrocarbons therein and insufficient to provide a temperature adequate to effect substantial combustion of the hydrocarbons extracted from the oil shale or substantial calcination of the calcium carbonate, conducting the extracted hydrocarbons and the calcium carbonate in an upward direction into a freeboard combustion zone, contacting the contents in said freeboard combustion zone with excess air having an oxygen level in the range of about 10 to 85 percent greater than stoichiometric to provide a temperature sufficient to effect the combustion of said volatiles and the calcination of said calcium carbonate in said combustion zone, thereafter extracting sensible heat from the resulting combustion products.

4,373,455
SEED BOOT ASSEMBLY
Terrance Friggstad, Frontier, Canada, assignor to Friggstad Manufacturing Ltd., Frontier, Canada
Filed Jun. 8, 1981, Ser. No. 271,777
Int. Cl.³ A01C *5/00*
U.S. Cl. 111—86 **18 Claims**

1. A seed and/or fertilizer applicating boot assembly for use in conjunction with a sweep secured to a downwardly depending sweep shank and including a securing bolt assembly extending diametrically through said tube from the front to the rear thereof and through the shank to secure said tube to said shank; comprising in combination substantially vertical tube operatively connected to a source of grain and/or fertilizer entrained in an air stream, means in said tube to divide the stream of grain and/or fertilizer into two streams, one at each side of the tube, said means extending along the vertical length of part of said tube, said means including a vertically extending crease formed in the wall of said tube extending inwardly therefrom partway across the bore of said tube, and extending

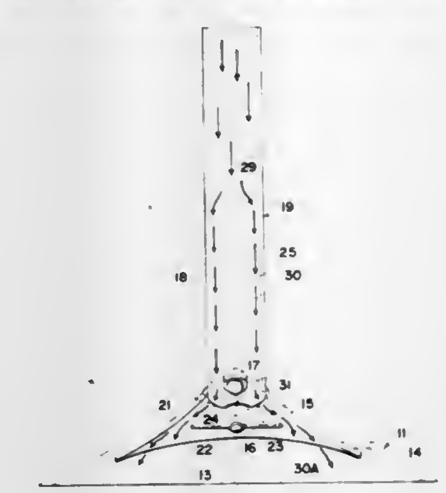

from just above the securing bolt assembly to a point situated adjacent midway along the length of said tube.

4,373,456
AGRICULTURAL FURROW FORMING APPARATUS DEPTH CONTROL
Lawerence D. Westerfield, Romeoville, Ill., assignor to International Harvester Co., Chicago, Ill.
Filed May 20, 1981, Ser. No. 265,514
Int. Cl.³ A01C *5/06*
U.S. Cl. 111—88 **1 Claim**

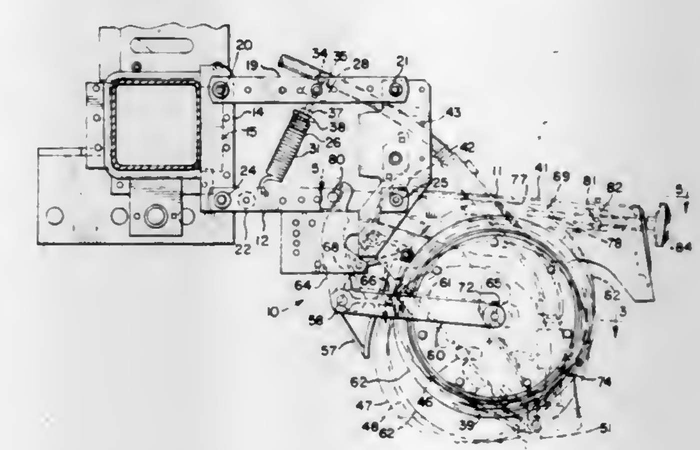

1. A furrow forming apparatus depth control for a seed planter, comprising:
(a) a frame, said frame being adapted to be attached for towing to a mobile power source;
(b) a pair of opposed furrow forming disks rotatably mounted on said frame, with the disks substantially contacting each other at the approximate point of entry into the soil and diverging apart rearwardly and upwardly relative to the direction of travel;
(c) a pair of gauge wheel means individually mounted on said frame forward of said disks for regulating furrow depth, each means including a support pivotally mounted on said frame, a wheel located generally adjacent an outer surface of a disk and rotatably mounted on said support;
(d) gauge wheel adjustment means movably mounted on said frame for contact with said supports to achieve desired furrow depth, said means including an indicator and a slide slideably mounted on said frame forward of said supports and above the pivotal mounting of said supports on said frame, said slide having a threaded portion and including structure positioned adjacent said supports and extending transversely thereto and to the furrow, a threaded rod engageable with said threaded portion and a knob for rotating said rod for moving said supports equally in the same direction;
(e) furrow depth indicating means having a zero indicating

position and spaced indicia located adjacent said indicator; and

(f) adjustment means for selectively mounting said indicating means on said frame, said adjustment means including a longitudinally spaced pair of slotted holes elongated in the direction of indicator travel in said indicating means and complementary fasteners to selectively secure said indicating means to said frame, whereby with said disks and wheels in contact with a level surface, and said zero indicating position of said indicating means being located opposite said indicator by said adjustment means and secured to said frame, accurate depth control is achieved.

4,373,457

FEED ARRANGEMENT FOR TEXTILE MACHINES

August Heinzle, Altweg 9, A-6844 Altach, Austria

Filed Feb. 20, 1980, Ser. No. 122,847

Claims priority, application Austria, Feb. 20, 1979, 1304/79

Int. Cl.³ D05C *3/04;* **D05B** *49/04*

U.S. Cl. 112—96 **5 Claims**

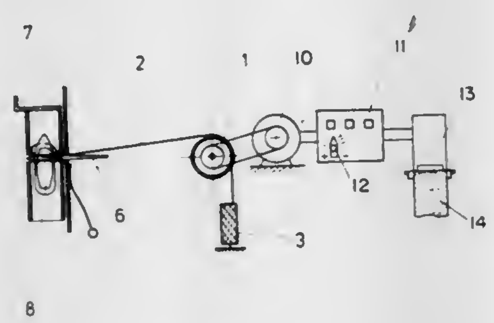

1. A feed arrangement for feeding and tightening a thread with respect to a foundation in a textile machine which includes a supply of thread and a generally cylindrical thread roller about which the thread is looped at least once to frictionally contact the thread roller, comprising drive means directly connected to the thread roller for rotating the thread roller in one direction about its axis to feed intermittently desired lengths of the thread from the thread supply so that successive stitches of the thread can be formed in the foundation, and for rotating the thread roller in the opposite direction about its axis after each stitch is formed to tighten the thread a desired amount relative to the foundation, and means for controlling said drive means so that different lengths of thread can be fed successively by the thread roller to form corresponding stitches in the foundation during operation of the textile machine.

4,373,458

METHOD AND MACHINE FOR VERSATILE STITCHING

Adolph S. Dorosz, Beverly; Patrick N. Kirwan, Danvers, both of Mass., and Nicholas P. Szydlek, Exeter, N.H., assignors to USM Corporation, Farmington, Conn.

Continuation of Ser. No. 924,840, Jul. 14, 1978, abandoned. This application Jun. 4, 1981, Ser. No. 271,023

Int. Cl.³ D05B *21/00*

U.S. Cl. 112—121.12 **35 Claims**

1. A method of forming stitch paths at selected distances apart on a workpiece translatable in its own general plane which comprises, providing in a sewing machine a needle bar reciprocable on an axis and carrying a plurality of needles into and out of the workpiece from one side thereof, providing a plurality of thread hooking devices operable on thread on the opposite side of the workpiece, each of the thread hooking devices being rotatable about said axis, and causing the needle bar and thread hooking devices to be rotated about the common axis when the plurality of needles are disengaged from the workpiece so that a line interconnecting the tips of the needles at their workpiece engaging localities is maintained at arbitrarily predetermined angles to the translation path of the workpiece during operation of the machine wherein the distance between stitch paths is selectively varied by changing said line

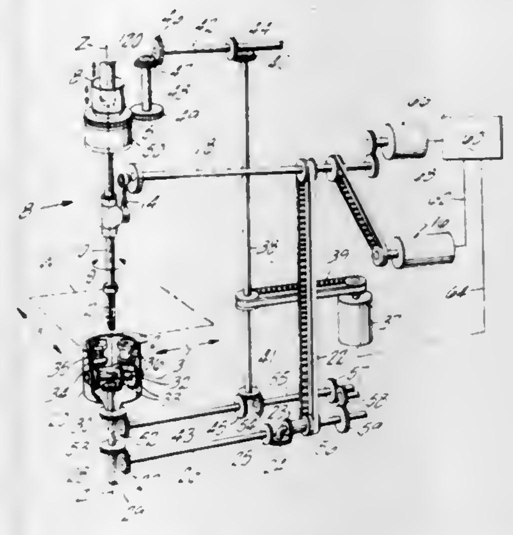

from a maintained perpendicularity to a selected angle or succession of selected angles less than 90°.

4,373,459

ELECTRONICALLY CONTROLLED SEWING MACHINE ARRANGED TO SEW A SEQUENCE OF STITCH PATTERNS

William H. Dunn, Frankford Township, Sussex County; Stephen A. Garron, Elizabeth; Leonard I. Horey, West Orange, and John W. Wurst, Chester Township, Morris County, all of N.J., assignors to The Singer Company, Stamford, Conn.

Filed Aug. 11, 1982, Ser. No. 407,023

Int. Cl.³ D05B *3/02*

U.S. Cl. 112—158 E **6 Claims**

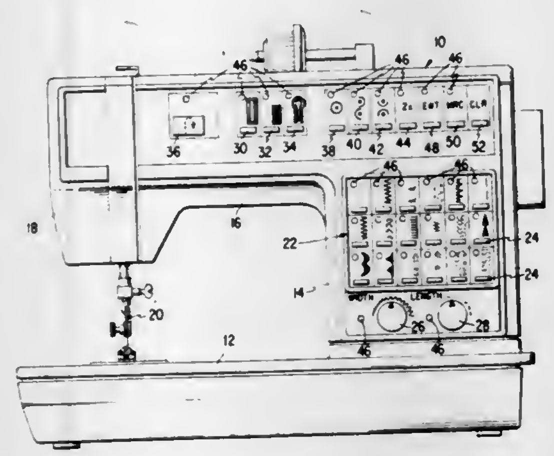

1. An electronically controlled multiple pattern sewing machine including a central control system having a memory storing stitch pattern information, pattern selection input means for transmitting to said central control system a pattern selection signal identifying a selected pattern to be sewn by the sewing machine, alteration function input means for transmitting to said central control system selected pattern alteration function commands associated with a selected pattern on an individual basis to cause said central control system to alter the stored stitch pattern information in accordance with said selected pattern alteration function commands so as to sew a selectively altered version of a selected pattern, and pattern string memory means for storing the sequence of entries each comprising a respective pattern selection signal and associated selected pattern alteration function commands.

4,373,460

SEWING MACHINE LOOPERS

William R. Parker, Mt. Prospect, and Matt J. Gosche, Franklin Park, both of Ill., assignors to Union Special Corporation, Chicago, Ill.

Filed Apr. 26, 1978, Ser. No. 900,049

Int. Cl.³ D05B *57/06*

U.S. Cl. 112—162 **5 Claims**

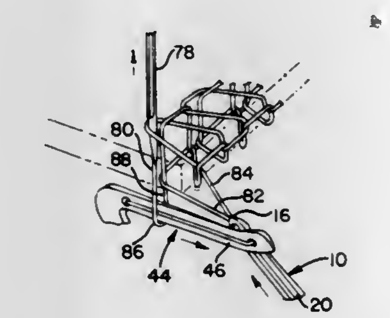

1. A three thread overedge stitch sewing machine having sewing instrumentalities comprising:

a thread carrying needle;

a thread carrying upper looper including:

a point end means;

a heel portion means;

a blade means having a front face means extending from said upper looper point end means to said upper looper heel portion means, said upper looper front face means having an upper edge means and a lower edge means;

a butt end shank means joined to said upper looper heel portion means;

a thread groove means located in said upper looper front face means of said upper looper blade means; and

eye means located in said upper looper blade means at said upper looper point end means, said upper looper thread groove means terminating at said upper looper eye means, said upper looper point end means being disposed between the center line of said upper looper thread groove and eye means and the upper edge of said upper looper front face means, whereas to prevent said upper looper point end means from piercing the previously set stitch when sewing extremely heavy weight material; and,

a thread carrying lower looper including:

a beak end means;

a heel portion means;

a blade means having a front face means extending from said lower looper beak end means to said lower looper heel portion means;

an angled base portion means formed with a shank end means and joined to said lower looper heel portion means;

two eye means located in said lower looper blade means, one of said lower looper eye means being in proximity of said lower looper beak end means and the other of said lower looper eye means being in proximity of said lower looper heel portion means;

a lengthwise thread groove means located in said lower looper front face means of said lower looper blade means, one end terminating at said lower looper beak end eye means and the other end terminating at said lower looper heel portion eye means; and

a bottom face portion means being generally flat and extending the length of said lower looper blade and having a 2° rise at said lower looper beak end means whereas to prevent needle thread loop skips when sewing at extremely high speeds, 8000 stitches per minute range.

4,373,461

SEWING MACHINE WITH A CYCLE PATTERN STITCHING DEVICE

Yasuro Sano, Hachioji, Japan, assignor to Janome Sewing Machine Co. Ltd., Tokyo, Japan

Filed Aug. 11, 1980, Ser. No. 177,460

Claims priority, application Japan, Aug. 16, 1979, 54-112054[U]

Int. Cl.³ D05B *69/22*

U.S. Cl. 112—274 **3 Claims**

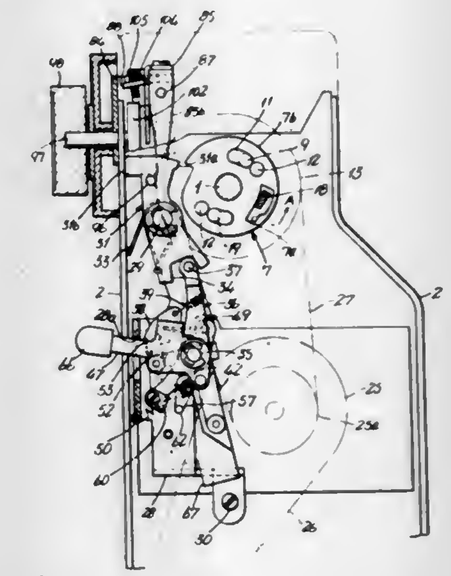

1. A sewing machine, comprising a housing; an upper shaft turnably mounted in said housing and adapted to reciprocate a needle penetrating a fabric to be sewn; a pulley mounted on said upper shaft freely rotatable relative thereto; means adapted to be driven by a motor for rotating said pulley; clutch means normally connecting said upper shaft to transmit rotation of said pulley to said upper shaft; stop means mounted on said upper shaft for rotation therewith; blocking means displaceable between an inoperative position in which it is spaced from the path of rotation of said stop means and an operative position located in said path to block rotation of said stop means; means cooperating with said stop means and operating said clutch means to disconnect said upper shaft from said pulley when said blocking means blocks rotation of said stop means; cycle stitch control means rotated by said upper shaft at a predetermined speed; regulating means cooperating with said control means while holding said blocking means in said inoperative position; and manually operated means operated to a predetermined position to constantly bias said blocking means toward the path of rotation of said stop means against the action of said regulating means holding the blocking means in the inoperative position, said control means operating said regulating means in one direction to release said blocking means after a predetermined number of revolutions of said upper shaft.

4,373,462

FILLABLE STRUCTURE

Daniel C. E. Fish, Wimbourne, England, assignor to Leigh Flexible Structures Limited, Walsall, England

Filed May 20, 1980, Ser. No. 151,633

Int. Cl.³ B63B *25/08*

U.S. Cl. 114—74 R **3 Claims**

1. A floatable fillable structure comprising flexible pieces fixed together at least along longitudinally extending side seams, each seam defining a laterally extending piece with an internal longitudinally extending passage, discrete buoyancy elements trapped in said passages thereby providing a buoyant, stable structure which floats in the correct orientation, a vent

normally biased to the closed position secured to an upper wall of the structure and a floating spacer composed of a net bag

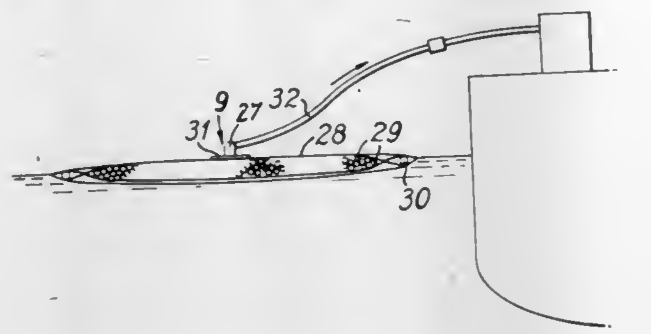

containing balls under the vent to maintain a gas passage between the vent and the interior of the structure.

4,373,463
CLEAT DEVICE
Jerald G. Beaudette, 5042 Bryant Ave., South, Minneapolis, Minn. 55419
Filed Aug. 5, 1980, Ser. No. 175,484
Int. Cl.³ B63B *21/04*
U.S. Cl. 114—218 **2 Claims**

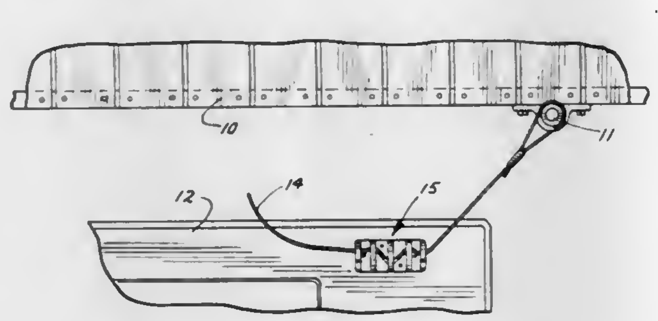

1. A cleat device on a larger structure for restraining a flexible line including:
A. a base fixedly mounted to said larger structure;
B. a plurality of at least three parallel, spaced-apart, jam cleats mounted on said base in juxtaposition, with adjacent open ends facing in opposition directions, said jam cleats each including a planar upper face and a planar lower face converging to form a first acute angle;
C. at least one of said faces of each of said jam cleats including a longitudinally extending ridge thereon forming a second acute angle with the other face, said rib being centrally aligned with its working face and said rib not extending entirely across the width of the face and said first angle ranges from 10° to 50° and said second angle ranges from 15° to 60°; and
D. means to maintain a line cleated in said jam cleats so that its axis is in direction to maintain said line in jammed relationship with respect to the outermost jam cleats.

4,373,464
RESILIENT DOME DEVICE
Herbert Blau, Philadelphia, Pa., assignor to Blau & Lapides, Inc., Philadelphia, Pa.
Filed May 27, 1980, Ser. No. 153,280
Int. Cl.³ E01F *9/01, 9/06, 11/00*
U.S. Cl. 116—63 R **10 Claims**

1. A resilient dome device comprising in combination,
(a) a hollow dome made of resilient material, said dome having a top and a base,
(b) a central tubular formation of resilient material secured to and extending vertically centrally downward from the top of the dome substantially to the base of the dome, said tubular formation being open at its upper end and through the top of the dome and downward through at least most of its vertical extent, whereby said tubular formation is adapted to receive within it a cylindrical member projected thereinto,
(c) a spring disposed about the outer surface of and extending substantially the full length of the said central tubular

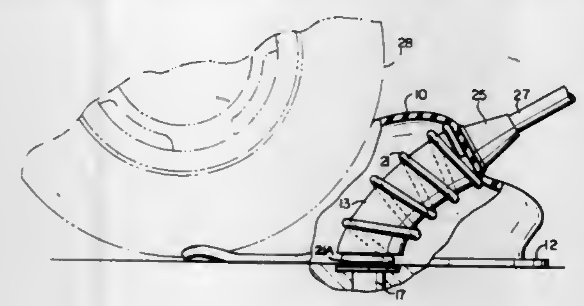

formation thereby helping to restore the resilient dome to its undeformed shape, and
(d) means for connecting said device to a supporting surface against which said dome base is disposable.

4,373,465
VISUAL FLUID LEVEL INDICATOR
Robert F. Gaiser, Stevensville, Mich., assignor to The Bendix Corporation, Southfield, Mich.
Filed Oct. 3, 1980, Ser. No. 193,763
Int. Cl.³ G01F *23/02*
U.S. Cl. 116—227 **1 Claim**

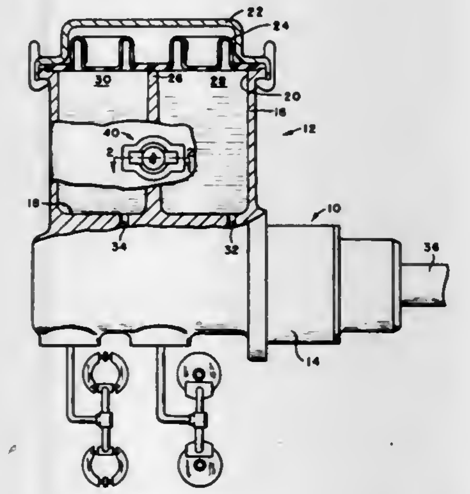

1. In a visual fluid level indicator, a housing having an outer wall extending from a base to an opening which receives the fluid, an inner wall extending from the base toward the opening to substantially form a pair of cavities for carrying the fluid and a transparent plastic plug sealingly coupled to the housing to provide a visual indication of the fluid level within the housing, characterized by said inner wall cooperating with said outer wall to define a passage extending between said pair of cavities at an intermediate location on said inner wall between said base and said opening and said outer wall including an outer wall opening intersecting said passage to communicate with said pair of cavities at a predetermined location relative to said base, said transparent plastic plug including a first diameter portion extending into said outer wall opening and a second diameter portion forming a shoulder with said first diameter portion, said outer wall also including at least one transversely extending tab, said transparent plastic plug including at least one integrally formed resilient projection cooperating with said one transversely extending tab to releasably connect said transparent plastic plug to said housing when said first diameter portion is received within said outer wall opening, said tab including an undercut recess which defines a lock spaced from said outer wall opening and said projection being biased into said undercut recess to define a locking fit spaced outwardly from said shoulder and prevent disconnection of said transparent plastic plug from said housing, and a sealing ring engaging said first diameter portion, said shoulder and said outer wall.

4,373,466
STOREROOM BIN MARKER
Ralph G. MacPhee, 1209 Fremont Hill Dr., Selah, Wash. 98942
Filed Oct. 24, 1980, Ser. No. 200,391
Int. Cl.³ G09F *3/20, 9/00*
U.S. Cl. 116—315 **11 Claims**

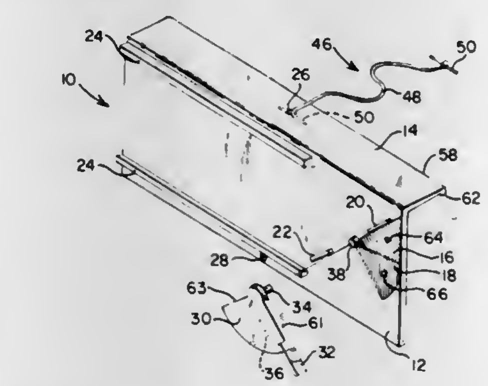

1. A storeroom bin marker comprising:
a base member means having located thereon at least two indicia means; and
a view blocking means mounted to said base member means for rotation about an axis generally perpendicular to said base member means, so said view blocking means rotates in a plane generally parallel to said base member means; wherein said view blocking means is sized and located on said base member means in a way such that in a first position said view blocking means covers all of said indicia means, in a second position said view blocking means does not cover at least one of said indicia means, and in a third position said view blocking means does not cover any of said indicia means; and wherein said bin marker further comprises means for releasably holding said view blocking means in said first and second positions.

4,373,467
MACHINE FOR APPLYING A PATCH OF ADHESIVE ONTO THE BOTTOM OF A LAST
Michael M. Becka, Nashua, N.H., assignor to International Shoe Machine Corporation, Nashua, N.H.
Filed Jul. 27, 1981, Ser. No. 287,339
Int. Cl.³ B05C *1/02*
U.S. Cl. 118—211 **2 Claims**

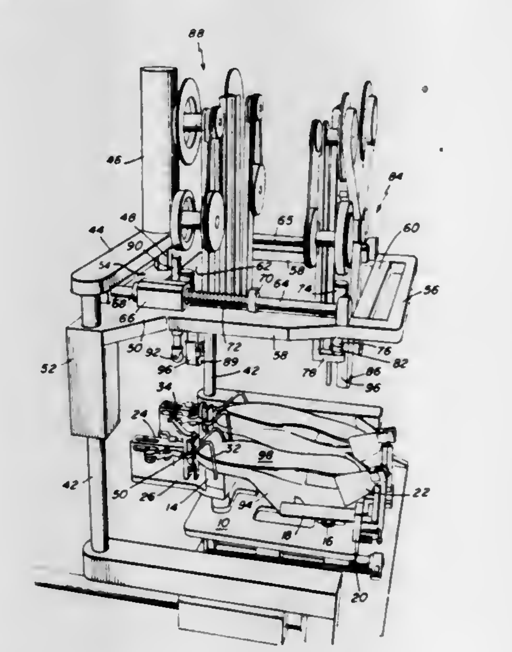

1. A machine for applying a patch of adhesive onto the bottom of a last prior to bonding an insole to the last bottom by means of the adhesive patch comprising: a last support for supporting the last bottom-up with its toe end facing rearwardly; an adhesive applying member, located above the last bottom, mounted for heightwise movement; a toe end contacting member mounted for yieldable forward movement from a rearward idle position spaced from the toe end of the last into a position of engagement with the toe end of the last; means for initially positioning the adhesive applying member in an upper idle position, spaced from the last bottom; and means for thereafter effecting downward movement of the adhesive applying member towards the last bottom to enable the adhesive applying member to engage the last bottom and apply the patch of adhesive onto the last bottom; characterized in that the machine comprises: means for yieldably moving the toe end contacting member forwardly from its idle position into engagement with the toe end of the last prior to effecting the downward movement of the adhesive applying member; means mounting the adhesive applying member for forward-rearward movement; means yieldably urging the adhesive applying member to a rearward position; and cooperative shifting means, formed of a first portion mounted to the toe end contacting member and formed of a second portion mounted for heightwise movement with the adhesive applying member, effective to shift the adhesive applying member forwardly during its downward movement an amount such as to cause the adhesive applying member to engage the last bottom close to and rearwardly of the toe end of the last bottom.

4,373,468
DEVELOPING APPARATUS
Masashi Suda, Iruma, and Junichiro Kanbe, Tokyo, both of Japan, assignors to Canon Kabushiki Kaisha, Tokyo, Japan
Filed May 13, 1980, Ser. No. 149,451
Claims priority, application Japan, May 17, 1979, 54-60783
Int. Cl.³ G03G *15/09*
U.S. Cl. 118—658 **24 Claims**

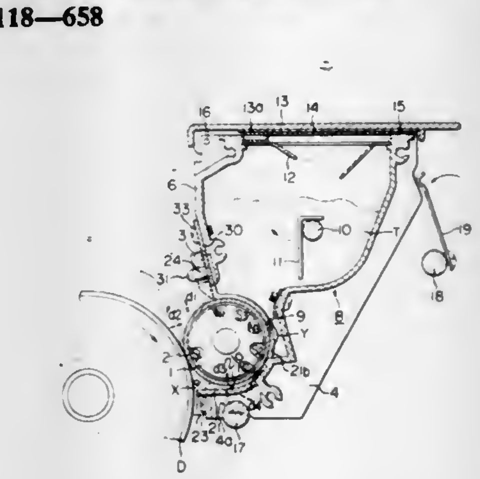

1. A developing apparatus for supplying developer to a latent image on a latent image bearing member to develop it, said apparatus comprising means for supplying one-component magnetic toner as said developer, a movable developer carrying member having a surface for receiving the supplied developer, a thickness limiting member of magnetic material or a magnet disposed close to the surface of said developer carrying member for limiting the layer of developer on said developer carrying member to a predetermined small thickness, fixed magnetic field producing means disposed within said developer carrying member, said magnetic field producing means having a magnetic pole positioned in facing relationship with said thickness limiting member, and means for mounting said thickness limiting member for slideable movement toward and away from the facing magnetic pole, said mounting means including locking means for maintaining a predetermined distance between said thickness limiting member and said developer carrying member, an adjusting plate mounted on said supply means, pin means cooperating with at least one opening in said thickness limiting member for positioning said adjusting plate and said thickness limiting member, and wherein said locking means includes means for connecting said adjusting

plate with said thickness limiting member, and wherein said opening in said thickness limiting member has a diameter larger than that of said pin means, said pin means being offset relative to said opening, said thickness limiting member being adapted to move toward said developer carrying member under the influence of the facing magnetic pole.

4,373,469
APPARATUS FOR DEVELOPING ELECTROSTATIC LATENT IMAGES
Tsukasa Kuge, Tokyo; Toru Matsumoto, Kita; Tsuyoshi Watanabe, and Yasuyuki Tamura, both of Kawasaki, all of Japan, assignors to Canon Kabushiki Kaisha, Tokyo, Japan
Continuation of Ser. No. 63,158, Aug. 2, 1979, abandoned, which is a division of Ser. No. 871,710, Jan. 23, 1978, Pat. No. 4,185,129. This application Jan. 30, 1981, Ser. No. 229,935
Claims priority, application Japan, Jan. 28, 1977, 52-8320
Int. Cl.^{3} G03G *15/10, 21/00*
U.S. Cl. 118—652 **4 Claims**

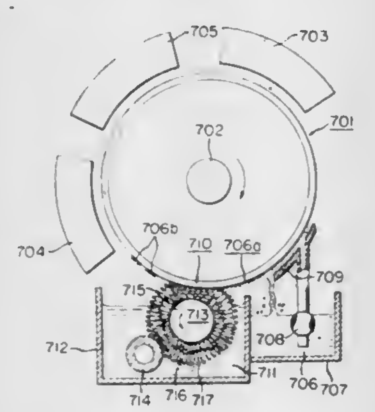

1. Apparatus for developing electrostatic latent images, comprising:
application means for applying a developer having a high concentration of developer particles uniformly over the image and non-image portions of a latent image bearing surface; and
developing means for applying a liquid to the image bearing surface to remove therefrom developer particles which are not attracted thereto by the coulomb force therebetween and form a developed image, said developing means comprising a liquid reservoir and a composite elastic roller for transferring liquid from said liquid reservoir to the image bearing surface, said composite roller including a core shaft member, an elastic inner layer provided on the circumference of said core shaft member, said elastic layer being elastically deformable and porous to retain liquid, and a sleeve-like net covering said inner layer, said net being made of flexible material and permeable to liquid and developing particles, at least one of said inner layer and net being electrically conductive to eliminate marginal effect in the developed image.

4,373,470
MASK POSITIONING CARRIAGE ASSEMBLY
Richard T. Martin, Goleta, Calif., assignor to Applied Magnetics Corporation, Goleta, Calif.
Filed Feb. 9, 1981, Ser. No. 232,842
Int. Cl.^{3} C23C *13/08*
U.S. Cl. 118—720 **22 Claims**

1. A carriage assembly for positioning a selected mask from a plurality of masks adapted to be supported thereon between a substrate and a source comprising
an elongated mask support means including
means adapted for positioning each of said masks in a predetermined position relative to each other in a selected plane;
means defining a guiding element and a supporting element;
means operatively coupled to and for transporting the elongated mask support means and masks supported thereby along a predetermined path and being adapted to position a selected mask at a working station between a substrate located in a plane substantially parallel to said selected plane and a source located in an opposed relation to a said substrate; and
means positioned along said predetermined path for movably engaging at a said working station said means for defining said guiding element and for directing movement thereof along a line of reference within said predetermined path, at least one of said means for defining said guiding element and said movably engaging means including means defining a recessed groove and the other of which defines a protruding lip which movably engage said recessed groove along said line of reference, said guiding element defining means and said movably engaging means

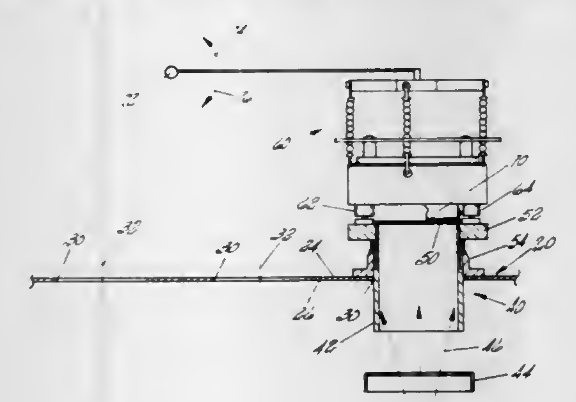

being operative to confine movement of the guiding element to movement thereof along said line of reference; and
means for movably engaging at a said working station said means for defining said supporting element on a surface which affords unconstrained thermal expansion and contraction and distortion of said elongated mask support means in all directions including along said line of reference to minimize lateral variations in position of a said selected mask at a said working station, said transporting means being adapted to move said elongated mask support means including masks supported thereby along said predetermined path relative to a said substrate and a said source independent of unconstrained thermal expansion and contraction and distortion of said elongated mask support means while confining movement of the guiding element along said line of reference.

4,373,471
MONITORING LIQUID CONSUMPTION OF A LABORATORY ANIMAL
John N. Coulbourn, Box 2551, Lehigh Valley, Pa. 18001
Filed Jul. 27, 1981, Ser. No. 287,255
Int. Cl.^{3} A01K *7/00*
U.S. Cl. 119—72 **10 Claims**

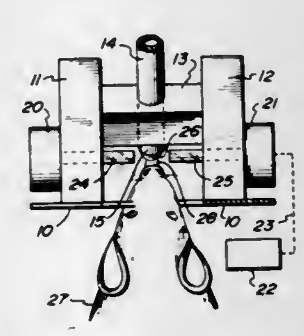

1. A method of monitoring liquid consumption of a laboratory animal which does not involve passing an electric current through any portion of the body of said animal, comprising the steps of:

(a) establishing a liquid feeding station;
(b) locating the terminus of a drinking tube within said station and connecting the other end of said tube to a source of the liquid to be consumed by the animal, thus maintaining a meniscus of liquid at said terminus;
(c) providing a photo-electric source and a companion photo-electric cell proximate said station but out of reach of said animal;
(d) piping a beam of light from said source to one side of said meniscus and piping said beam back to said cell from the other side of said meniscus, thereby completing a photo-electric circuit containing a gap therein which spans said meniscus;
(e) adjusting the location of the gap with respect to said tube terminus, as a function of the species of animal being monitored, so that the particular animal directly breaks the beam of light only when it is taking fluid from the drinking tube;
(f) linking the output of the photocell to a counter; and,
(g) counting the number of times the beam of light is broken;
whereby the drinking habits of the animal are accurately monitored.

4,373,472
WATER HEATER
Philipp Kreis, Munich, Fed. Rep. of Germany, assignor to GmbH & Co. TRUMA-Geratebau, Fed. Rep. of Germany
Filed Mar. 26, 1981, Ser. No. 247,668
Claims priority, application Fed. Rep. of Germany, Mar. 31, 1980, 3012548
Int. Cl.^{3} F22B *5/00*
U.S. Cl. 122—14 **8 Claims**

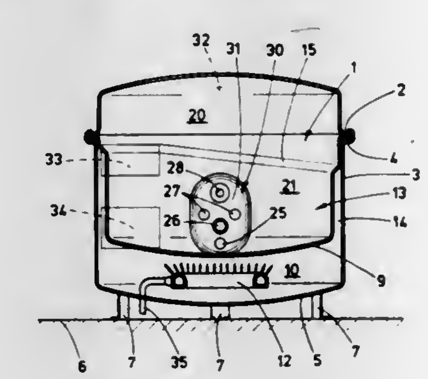

1. In a water heater for gaseous or gasified liquid fuels, especially for installation in mobile accommodation such as mobile homes, caravans or in mountain huts or similar small rooms, having a closed water container of approximately circular cross-section, a housing surrounding at least the lower section of said water container, said housing being closed at the bottom by means of a base and forming, in conjunction with the base of the water container, a gas-tight combustion chamber, a lower induction aperture for fresh air and an upper extraction aperture for waste gases and passages through the water container for inlet and outlet pipes, the improvement which comprises an annular space connected with the combustion chamber formed between the housing and the water container, both the waste gas extraction aperture and the fresh air induction aperture being located in the housing, one or two box-shaped corner sections having side walls and an outer wall portion in one side wall for one or both apertures having a fresh air chamber, adjoining the housing and, by means of their side walls, converting the housing in the vicinity of the corner sections into a rectangular shape, and a connecting aperture to link up with a through-flow unit in the outer wall portion being provided in one side wall.

4,373,473
HEAT RECUPERATING WATER HEATING SYSTEM
Robert Grandmont, Sherbrooke, Canada, assignor to 110707 Canada Ltee, Quebec, Canada
Filed Mar. 16, 1981, Ser. No. 243,764
Int. Cl.^{3} F22B *33/00*
U.S. Cl. 122—20 B **8 Claims**

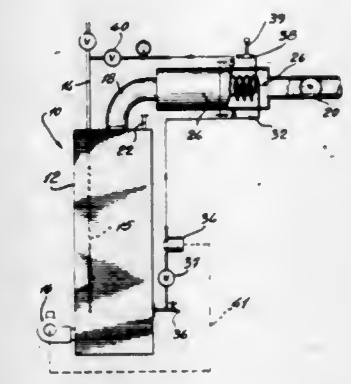

1. A heat recuperating water heating system comprising:
a water receiving enclosure;
a water inlet to and a water outlet from said enclosure;
a burner to provide a source of heat for heating water in said enclosure;
a flue to carry away products of combustion from said heat source;
a manifold in said flue;
a continuous coil line in said manifold, said coil line being doubly wound to define a pair of inner and outer concentric loops; said coil line having one end connected to a first conduit in communication with said water inlet and the opposite end connected to a second conduit in communication with said water outlet;
water circulating means in said second conduit between said opposite end of said coil line and said water outlet; and
electrical means connecting said water circulating means to said burner to set said circulating means in operation each time said burner is operated, said water circulating means being set to provide a determined flow of water in said coil.

4,373,474
SCAVENGING ARRANGEMENT FOR A TWO-STROKE INTERNAL COMBUSTION PISTON ENGINE
Manfred Schindler, Markt Schwaben; Reinhold Ficht, Kirchseeon, and Hermann Vogt, Fürmoosen, all of Fed. Rep. of Germany, assignors to Ficht GmbH, Kirchseeon, Fed. Rep. of Germany
Filed Dec. 29, 1980, Ser. No. 221,196
Claims priority, application Fed. Rep. of Germany, Nov. 4, 1980, 3041560
Int. Cl.^{3} F02B *75/24*
U.S. Cl. 123—56 B **7 Claims**

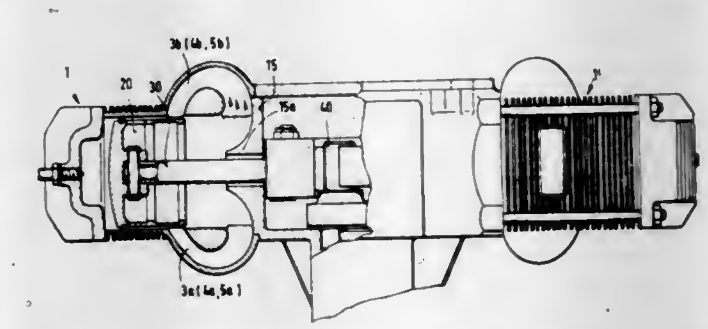

1. Two-stroke internal combustion piston engine comprising a pair of axially elongated cylinders disposed in axial alignment and spaced axially apart, a separate piston reciprocally movable in each said cylinder in the axial direction thereof and

having a bottom dead center position within said cylinder, a separate piston rod connected to each said piston and said piston rods disposed in axial alignment, a rotating crank guide assembly located between said cylinders and coupling said piston rods for reciprocating said piston rods in the axial direction of said cylinders, said cylinders each including a cylinder wall extending in the axial direction of said cylinder defining the axially extending inner surface thereof, each said cylinder having an axially extending plane symmetrically dividing the interior of said cylinder, each said cylinder wall having an exhaust opening from the interior of said cylinder located in the region adjacent the bottom dead center position so that said exhaust opening is open when said piston is in the bottom dead center position, said exhaust opening being symmetrically arranged relative to the axially extending plane in said cylinder and extending in the axial direction of said cylinder, each said cylinder wall having a plurality of scavenging openings therethrough opening into the interior of said cylinder, said scavenging openings being arranged in a number of pairs with each pair being symmetrically arranged relative to the axially extending plane so that each scavenging opening of one pair is located on an opposite side of the axially extending plane from the other said scavenging opening thereof, the axial extent of said scavenging openings are located in the axially extending region of said exhaust opening, said scavenging openings are spaced angularly from said exhaust opening relative to the axial direction of said cylinders, duct means for supplying the scavenging medium to said scavenging openings, said scavenging openings having first side surfaces extending in the axial direction of said cylinder and second side surfaces extending transversely of the axial direction of said cylinder, a first pair of said scavenging openings being located more remote from said exhaust opening than the other said scavenging openings, a second pair of said scavenging openings being located closer to said exhaust opening than the other said scavenging openings, the projection of said first side surfaces of said pairs of scavenging openings opening into the interior of said cylinder each intersect in an arrow-like shape with the point at the intersection directed away from said exhaust opening, the projections of said first side surfaces of said first pair of said scavenging openings forming an angle on the sides of said projections closer to said exhaust opening greater than the angle formed by said first side surfaces of the remaining pairs of said scavenging openings, with the arrow-like shaped angles formed thereby decreasing as said pairs of scavenging openings are located closer to said exhaust opening, and the projection of said second side surfaces of said pairs of scavenging openings extending into the interior of said cylinder forming an acute angle with a plane extending perpendicular to the axial direction of said cylinder and the acute angle formed by said first pair of scavenging openings being greater than the acute angle formed by said second side surfaces of the remaining said pairs of scavening openings with the acute angle formed thereby decreasing as said pairs of scavenging openings are located closer to said exhaust opening, so that the individually directed flows from the differently directed pairs of said scavenging openings build upon one another and initially flow away from said piston in the bottom dead center position to the opposite end of said cylinder and then reverse direction at the opposite end of said cylinder and flow toward said piston for displacing residual gases of the preceding working stroke out of said exhaust opening.

4,373,475
INTERNAL COMBUSTION ENGINE
J. David Kirk, Waukegan, Ill., assignor to Outboard Marine Corporation, Waukegan, Ill.
Filed Dec. 18, 1980, Ser. No. 217,858
Int. Cl.³ F02B *75/20, 33/04*
U.S. Cl. 123—59 B **10 Claims**

1. An internal combustion engine comprising a cylinder block having a bore, means for forming in said cylinder block first, second, and third openings, each of said openings communicating with said bore, said cylinder block also having means defining an exhaust passage spaced from said bores, and a cover member removably attachable on said cylinder block and including means defining a first cavity communicating with said first opening and with said exhaust passage when said

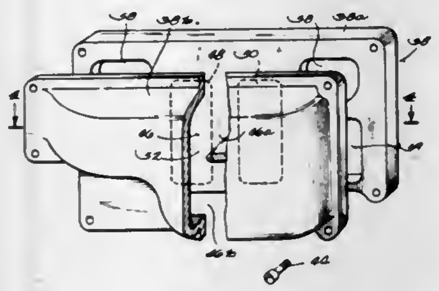

cover member is attached on said cylinder block and means defining a second cavity communicating with each of said second and third openings when said cover member is attached on said cylinder block.

4,373,476
ROTARY VALVE SYSTEM
Joseph P. Vervoordt, 432 Monroe Ave., and Joseph J. Gorzynski, 259 Prospect Ave., both of New Milford, N.J. 07646
Filed Mar. 7, 1980, Ser. No. 128,293
Int. Cl.³ F01L *7/06*
U.S. Cl. 123—80 D **5 Claims**

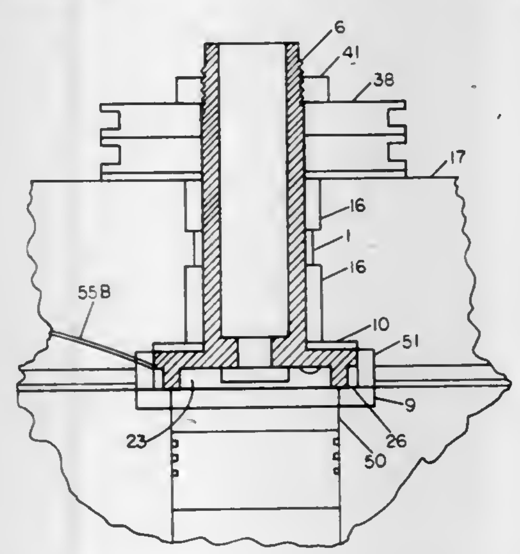

1. A rotary valve system for internal combustion engines including a valve disc jacket having an aperture therein and predetermined inlet and outlet passages, the combination comprising:

an elongated substantially cylindrical valve passage means having a threaded section at one end and an outwardly extending disc portion at the other end having a downwardly extending circumferential wall with a predetermined aperture extending therealong, said disc portion having a bottom surface comprising the upper surface of a combustion chamber and an upper surface and including at least one shaped protrusion thereon for purposes of charge stratification,

a ring seal having a predetermined aperture therethrough for mating with the corresponding aperture in the circumferential wall of the disc portion, said apertures periodically cooperating with the inlet and outlet passages in the valve disc jacket, and,

an impregnated sleeve insert mounted between the upper surface of the disc portion and the valve disc jacket to provide a contact running surface that is run dry.

4,373,477
LASH ADJUSTER WITH PLUNGER RETAINER
Stephen M. Buente, Kalamazoo, and George A. Hillebrand, Battle Creek, both of Mich., assignors to Eaton Corporation, Cleveland, Ohio
Filed Dec. 29, 1980, Ser. No. 220,490
Int. Cl.³ F01L *1/24, 1/14*
U.S. Cl. 123—90.55 **8 Claims**

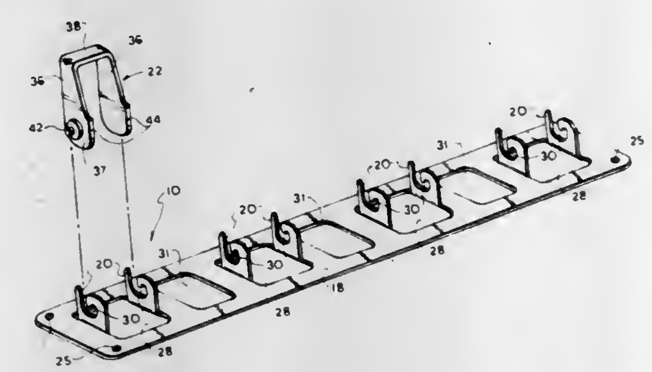

1. A lash adjuster for valve gear of an internal combustion engine comprising:

(a) body means including structure defining a bore therethrough, said bore terminating in an internal face;

(b) plunger means slidably received in said bore, said plunger means including structure defining a plunger body having a bore therein with a piston slidably received in said bore in precision closely fitting relationship thereto, said piston and said plunger body cooperating to define a fluid pressure chamber therebetween;

(c) one-way valve means disposed in said plunger means and operable to permit flow of fluid into said fluid chamber upon movement of said piston in a direction outwardly of said plunger body;

(d) said plunger means and said body means defining a fluid reservoir for supplying fluid to said one-way valve means;

(e) said body means defining a passage for communicating pressurized fluid to said fluid reservoir; and

(f) means for retaining said plunger means within said bore prior to assembly of said lash adjuster into said valve gear, said retaining means including,

(i) said plunger body defining a ramp surface adjacent said end portion,

(ii) fastener means including an elastically deformable member disposed in engagement with said plunger body, said ramp surface being operable upon insertion of said plunger means in said bore to elastically deform said member radially outwardly and subsequently cause said member to engage said plunger means in snap locking arrangement for preventing removal of said plunger means from said bore.

4,373,478
APPARATUS FOR RELEASABLY SECURING IGNITION DEVICES
Sultan A. Rifat, 159 Gelston Ave., Brooklyn, N.Y. 11209
Filed Apr. 27, 1981, Ser. No. 258,023
Int. Cl.³ F02P *13/00*
U.S. Cl. 123—169 R **8 Claims**

1. Apparatus for use with a combustion engine of the type including a cylinder head having a plurality of bores therein for receiving a plurality of non-externally threaded ignition devices, said apparatus releasably securing said ignition devices in said bores and facilitating the insertion and removal of said ignition devices therefrom, said apparatus comprising:

means, separate from said ignition devices, defining a pair of slots about each of said bores;

a plurality of retaining members, one for each ignition de-

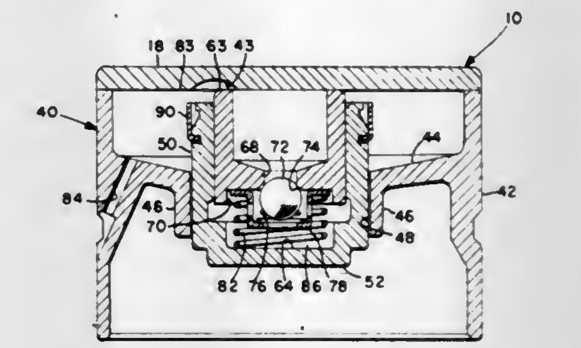

vice, each retaining member having a bearing surface and a pair of projections receivable in a pair of slots disposed about a bore; and

means for releasably securing said projections in said slots with said bearing surfaces abutting said ignition devices and urging said ignition devices into said bores.

4,373,479
FUEL SYSTEM PROVIDING PRIMING AND AUTOMATIC WARM UP
Henry C. Billingsley, Waukegan, and Chester G. DuBois, Zion, both of Ill., assignors to Outboard Marine Corporation, Waukegan, Ill.
Filed Aug. 7, 1980, Ser. No. 176,079
Int. Cl.³ F02M *1/16*
U.S. Cl. 123—187.5 R **10 Claims**

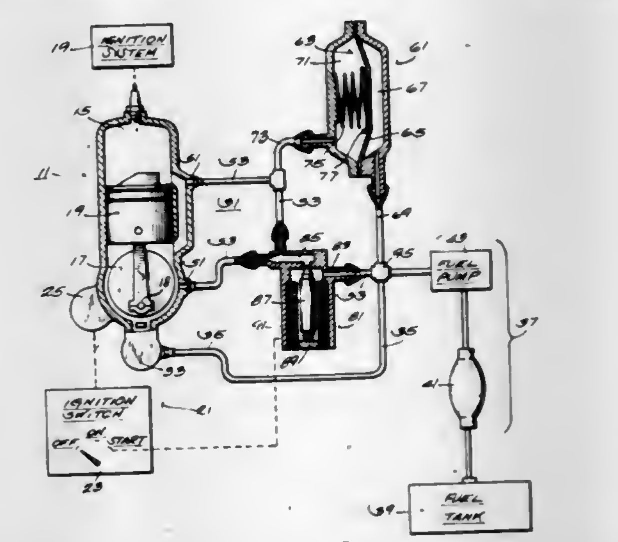

1. A fuel supply system for an internal combustion engine including a combustion chamber and a rotatably mounted crankshaft, said fuel system comprising means operable for supplying priming fuel to said combustion chamber and for automatically supplying additional fuel to said combustion chamber independently of crankshaft rotation and in response to supplying priming fuel to said combustion chamber and initiation of engine starting.

4,373,480
CONSTRUCTION OF POWER TRANSMITTING DEVICE FOR INTERNAL COMBUSTION ENGINE
Mitsuo Shikata, Toyonaka, and Kazuto Usui, Osaka, both of Japan, assignors to Yanmar Diesel Engine Co., Ltd., Osaka, Japan
Filed Mar. 10, 1980, Ser. No. 128,965
Claims priority, application Japan, Jan. 17, 1980, 55-3970
Int. Cl.[3] F02F *7/00*
U.S. Cl. 123—195 A **2 Claims**

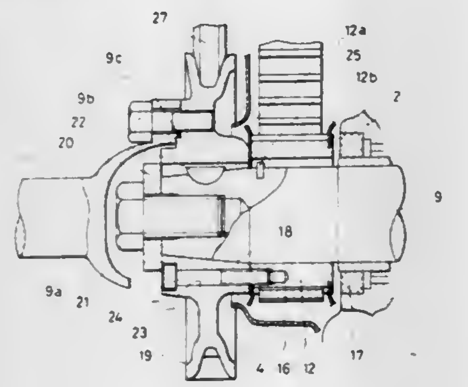

1. A power transmitting device for an internal combustion engine, said device comprising:
(a) a crankshaft having a tapered end portion;
(b) a timing belt pulley mounted on said crankshaft adjacent to said tapered end portion;
(c) a transmission shaft having first shoulder means spaced radially outward at one end thereof, wherein said power take out pulley includes second should means and wherein said transmission shaft is fixedly connected to said take out pulley with said first shoulder means engaging said second shoulder means; and
(d) a power take-out pulley mounted by fixing it in position on said crankshaft on the tapered end portion thereof; wherein the timing belt pulley is fixed to the power take-out pulley by fixing the power take-out pulley to the tapered end portion of the crankshaft and then fixing the timing pulley to the power take-out pulley.

4,373,481
DEVICE FOR CONTROLLABLE COUPLING OF TWO SHAFT PARTS WITH A PREDETERMINED ANGLE OF ROTATION CORRELATION
Hermann Krüger, and Michael Willmann, both of Wolfsburg, Fed. Rep. of Germany, assignors to Volkswagenwerk Aktiengesellschaft, Wolfsburg, Fed. Rep. of Germany
Filed Apr. 22, 1981, Ser. No. 256,557
Claims priority, application Fed. Rep. of Germany, May 3, 1980, 3017092
Int. Cl.[3] F02D *13/06, 17/00;* **F02B** *75/32;* **F16D** *25/10*
U.S. Cl. 123—198 F **20 Claims**

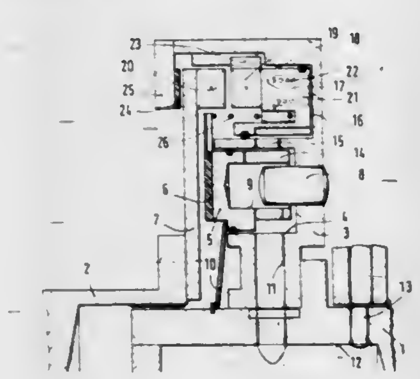

1. In a multicylinder internal combustion engine having a first crankshaft part and a second crankshaft part, a device for coupling said first and second crankshaft parts at a predetermined relative angular position comprising:
a friction clutch means for pre-coupling said first and second crankshaft parts, for attaining substantially the same speed of rotation, having a first thrust element coupled to said first shaft part, wherein said thrust element is rotatable over an angle relative to said first shaft between a first angular position and a second angular position, and a clutch plate coupled to said second shaft part for engaging said thrust element;
means for actuating said friction clutch means, wherein said thrust element is maintained in said first angular position during initial actuation of said friction clutch means and moves to said second angular position in response to a reversal in torque transmission between said crankshaft parts;
engagement means for achieving positive locking engagement between said first shaft part and said second shaft part, comprising a first engagement element mounted to said first shaft part to be axially displaceable therealong, and a second engagement element fixed to said second shaft part, wherein said engagement elements positively engage only at a predetermined relative angular position wherein said friction clutch means includes means for preventing the engagement of said engagement elements when said thrust element is in said first angular position; and
means for actuating said engagement means when said thrust element is in said second angular position.

4,373,482
FLEXIBLE SHAFT FAN DRIVE
Edward J. Goscenski, Jr., Battle Creek, Mich., assignor to Eaton Corporation, Cleveland, Ohio
Filed Feb. 2, 1981, Ser. No. 230,844
Int. Cl.[3] F02B *77/00*
U.S. Cl. 123—198 R **8 Claims**

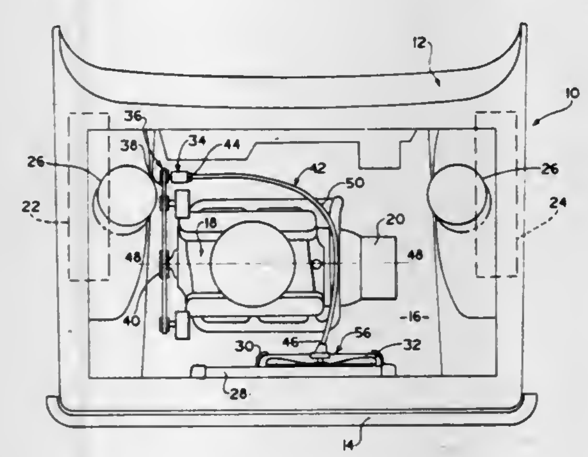

1. A cooling system for cooling a vehicle having a longitudinally extending axis, a front end facing in the direction of vehicle movement along said longitudinal axis, a rear end relative to said longitudinal axis, a pair of wheels at said front end rotatable about an axis traversing said longitudinal axis, and an engine located within said front end of said vehicle and having a crankshaft rotatable about an axis traversing said longitudinal axis, said engine having a front end facing one of said wheels and a rear end facing the other of said wheels along said crankshaft axis, and a radiator traverse to said longitudinal axis and located forwardly of said engine in said front end of said vehicle, the improvement comprising:
(a) a pulley located at said front end of said engine and driven by said crankshaft, said pulley having a front end located in the direction of said front end of said engine and a rear end located in the direction of said rear end of said engine along an axis substantially parallel to said crankshaft axis;
(b) a propeller type cooling fan located juxtaposition said radiator for moving air through said radiator along said longitudinal axis;
(c) a flexible shaft terminating at a pair of ends and extending a distance from said pulley at a location rearwardly of said crankshaft axis along a line traverse to said longitudinal axis and then bending along a curve and extending a distance toward said fan;
(d) means securing one end of said shaft at the rear end of said pulley for rotation of said shaft with said pulley; and
(e) means securing the other end of said shaft with said fan for rotating said fan.

4,373,483
LUBRICATING OIL PUMP DRIVE FOR AN INTERNAL COMBUSTION ENGINE
Cecil T. Bury, Huddersfield, England, assignor to David Brown Tractors Ltd., Huddersfield, England
Filed Mar. 3, 1981, Ser. No. 239,237
Claims priority, application United Kingdom, Mar. 19, 1980, 8009307
Int. Cl.[3] F02B *77/14*
U.S. Cl. 123—198 C **5 Claims**

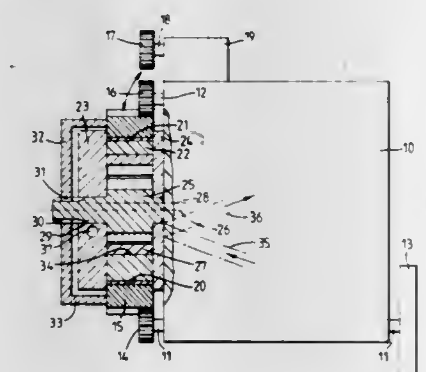

1. An internal combustion engine having a train of toothed gears including an idler gear driveably connecting its crankshaft to its camshaft, wherein its lubricating oil pump is of the internal gear type and is housed within and driven by said idler gear.

4,373,484
ROTARY PISTON MECHANISM
Daniel E. Boehling, 2341 Castlebridge Rd., Midlothian, Va. 23113
Filed Oct. 6, 1980, Ser. No. 194,190
Int. Cl.[3] F02B *53/02*
U.S. Cl. 123—241 **8 Claims**

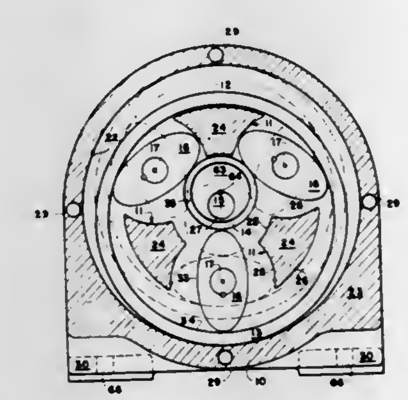

1. A rotary piston mechanism comprising:
a. a stator enclosure of fixed volume defined by two side plates spaced apart in gas-tight engagement with a circuitous boundary wall perpendicular to said plates, said boundary wall having a center of symmetry and being the interior portion of a housing of substantially uniform thickness having opposed flat outer faces,
b. three filler blocks of substantially identical shape and volume fixedly positioned within said enclosure and spaced 120° apart with respect to said center of symmetry, said blocks having opposed flat outer faces and four edge walls perpendicular thereto, including inner and outer edge walls, said outer edge wall being further from said center of symmetry than said inner edge wall, and two side edge walls of identical opposed curvilinear contour, said blocks being symmetrical about a plane perpendicular to said outer faces and bisecting said inner and outer edge walls,
c. rotor components disposed within said enclosure, said rotor components being of uniform thickness and having flat outer faces disposed to lie in close parallel association with said side plates, and having boundary edge walls perpendicular to said side plates, said rotor components comprising
i. a floating outer ring having concentric inside and outside circular boundary walls, said ring encompassing said three blocks and adapted to undergo rotative motion in a manner eccentric to said center of symmetry,
ii. an internal ring disposed about said center of symmetry and within an area bounded by said three filler blocks and adapted to undergo rotative motion in a manner eccentric to said center of symmetry and in a direction opposite to the motion of said outer ring, and
iii. three identical elliptic plates, each located in spaces formed between respective filler blocks, and adapted for rotation about axles perpendicularly centered therein, said axles being supported by said side plates at sites between said blocks in a manner such that rotation of said elliptic plates causes continuous rolling contact with said internal ring and inside circular boundary wall of said outer ring, whereby when said elliptic plates are rotated in the same direction, three chambers of variable volume are defined within said outer ring, and none of said rotor components contact said filler blocks,
d. a power delivery shaft which passes perpendicularly through said side plates at said center of symmetry,
e. means for coupling at least one rotor component to said power delivery shaft,
f. apertures positioned within said side plates to permit gas to enter and exit said chambers of variable volume, and
g. grooves provided in the outer faces of said elliptic plates adapted to control the flow of gas from said chambers through said apertures.

4,373,485
CARBURETOR FOR AN INTERNAL COMBUSTION ENGINE
Yoshimasa Hayashi, Kamakura, Japan, assignor to Nissan Motor Company, Limited, Yokohama, Japan
Filed May 20, 1981, Ser. No. 265,405
Claims priority, application Japan, Jul. 14, 1980, 55-99040[U]; Jul. 15, 1980, 55-99530[U]
Int. Cl.[3] F02M *11/04*
U.S. Cl. 123—340 **6 Claims**

1. A carburetor for an internal combustion engine of an automotive vehicle, the vehicle being equipped with a transmission, the carburetor comprising:
(a) primary and secondary barrels, the primary barrel comprising,
(1) a primary air intake passage,
(2) a primary venturi arranged in the primary air intake passage,
(3) a primary throttle valve arranged in the primary air intake passsage downstream of the primary venturi,
the secondary barrel comprising,
(4) a secondary air intake passage,
(5) a secondary venturi arranged in the secondary air intake passage,
(6) a secondary throttle valve arranged in the secondary air intake passage downstream of the secondary venturi;

(b) a vacuum responsive actuator connected to the secondary throttle valve to operate the same;
(c) a passageway opening to the primary and secondary venturis for obtaining a resultant of the primary and secondary venturi vacuums and introducing the resultant vacuum into the actuator so that the secondary throttle valve will be opened as the resultant vacuum rises;

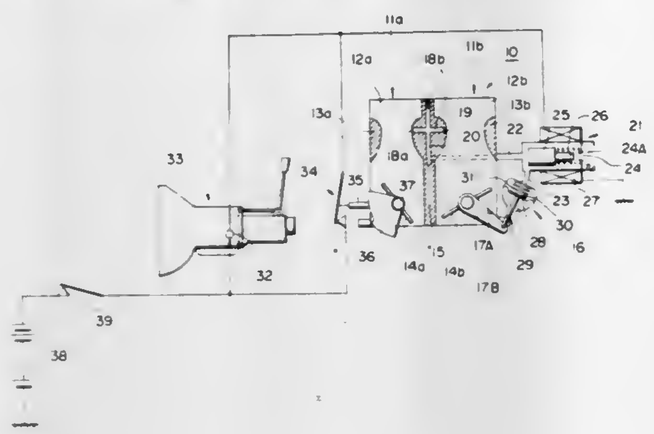

(d) a sensor for detecting whether a low-speed gear is engaged in the transmission; and
(e) a valve responsive to the sensor for controlling the introduction of the resultant vacuum into the actuator;
whereby the secondary throttle valve is closed irrespective of the resultant vacuum when the low-speed gear is engaged in the transmission.

4,373,486
ROTATIONAL POSITION AND VELOCITY SENSING APPARATUS
Gary R. Nichols, Woodburn, Ind., and John J. Kozlowski, Jr., Margate, Fla., assignors to Magnavox Government and Industrial Electronics Company, Fort Wayne, Ind.
Filed Jan. 9, 1981, Ser. No. 223,779
Int. Cl.³ F02P *5/04;* G01M *15/00*
U.S. Cl. 123—414 22 Claims

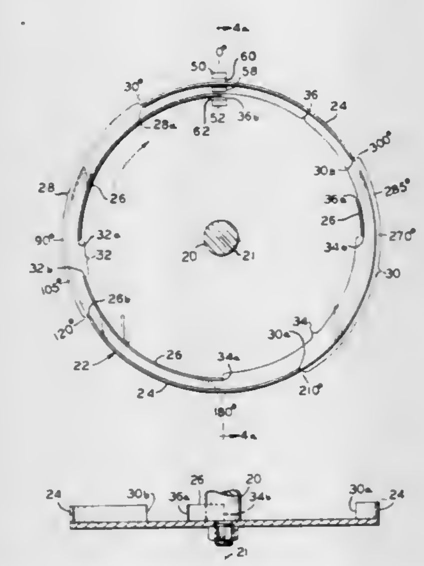

1. Rotational position sensing and output apparatus for a shaft rotatable about an axis for sensing a predetermined number of rotational positions of said shaft, comprising;
first means for generating a predetermined number of two digit binary signals corresponding to the predetermined number of rotational positions of said shaft;
second means for receiving said signals and for providing a predetermined number of separate binary waveforms each having at least two transitions between "0" and "1" for each revolution of said shaft;
said second means comprising means for recognizing transitions from one two digit binary signal to another two digit binary signal whereby additional rotational positions of the shaft are recognized;
said first means comprises a disk rotatably driven by the shaft;
first and second circular rims of magnetic field shunting material projecting from one side of said disk; said first and second rims being concentric with the shaft axis and having first and second radii, respectively;
first notches, each of predetermined arcuate length and angular position being formed in said first rim and second notches each of predetermined arcuate length and angular position being formed in said second rim;
a magnet having north and south poles being mounted in fixed relation to and on a radius of the axis of said shaft;
a first Hall-effect sensor, having an output, being mounted in fixed relation to the shaft axis and on said radius and being radially spaced from said north poles to define a first flux gap;
a second Hall-effect sensor, having an output, and being mounted in fixed relation to the shaft axis and on said radius and being radially spaced from said south pole to define a second flux gap;
said first rim being in radial registration with said first gap, and said second rim being in radial registration with said second gap;
said first and second rims passing freely through said first and second gaps, respectively, upon shaft rotation, causing the outputs of said Hall-effect sensors to alternate between binary level "1" and binary level "0" as a notch or rim passes through their respective gaps.

4,373,487
IGNITION TIMING CORRECTING SYSTEM FOR INTERNAL COMBUSTION ENGINE
Satoshi Komurasaki, and Tsuneo Yamane, both of Himeji, Japan
Filed Mar. 31, 1981, Ser. No. 249,459
Claims priority, application Japan, Apr. 3, 1980, 55-44405
Int. Cl.³ F02P *5/04*
U.S. Cl. 123—418 4 Claims

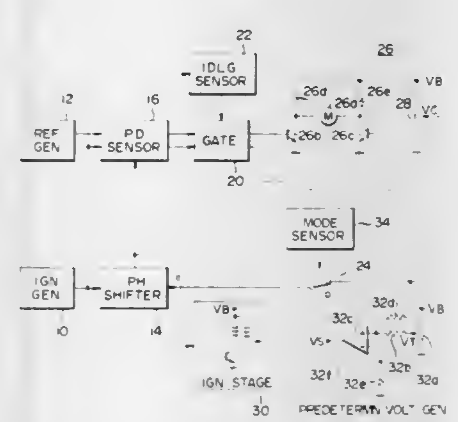

1. An ignition time correcting system for an internal combustion engine comprising a reference generator means for generating a reference signal at a reference angular position of the rotation of an internal combustion engine, an ignition generator means for generating an ignition signal at an angular position of the rotation of the engine leading that for said reference signal, said ignition signal having a predetermined advance characteristic, a phase shifter means connected to said ignition generator means to control a retardation of said ignition signal in response to a control input applied thereto, an ignition means connected to said phase shifter means to generate an ignition voltage with an output from said phase shifter means, a control signal generator means for generating a control signal for determining the retardation of said ignition signal provided by said phase shifter means, a control means for controlling a magnitude of said control signal in response to the phase relationship between said reference signal and said output from said phase shifter means so as to impart to said output from said phase shifter means a predetermined phase relative to said reference signal in a predetermined mode of operation of the internal combustion engine, and means for changing the magnitude of said control input to said phase shifter means from its magnitude determined by said control signal to its magnitude predetermined by a predetermined mode of operation of the internal combustion engine.

4,373,488
INTERNAL COMBUSTION ENGINE ELECTRONIC IGNITION SYSTEM
Michael A. Neuhalfen, Galveston, Ind., assignor to General Motors Corporation, Detroit, Mich.
Filed May 18, 1981, Ser. No. 264,663
Int. Cl.³ F02P *5/08*
U.S. Cl. 123—418 5 Claims

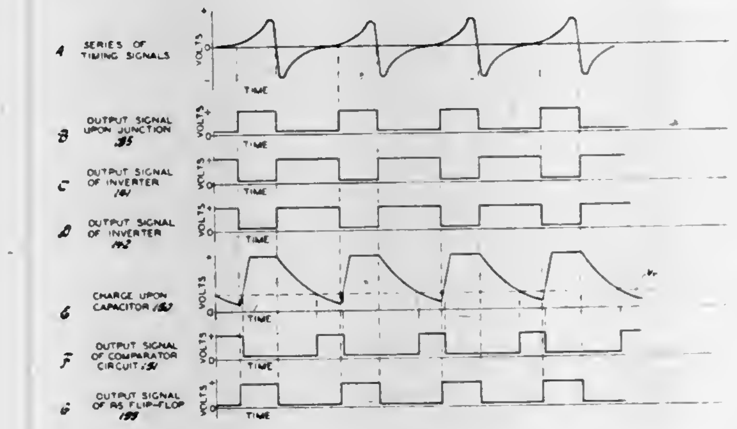

1. In an internal combustion engine electronic ignition system of the type that includes mutually exclusive discrete circuits responsive to each selected half cycle of a series of alternating current timing signals produced in synchronism with an associated engine that are operative, respectively, to effect engine speed ignition spark advance adjustment and to produce a series of substantially square wave electrical signals having leading and trailing edges with the trailing edges being substantially coincident with the point of zero crossover of each selected half cycle of the timing signals into the next half cycle, the improvement of circuitry operative to inhibit engine speed ignition spark advance adjustment with engine speeds less than a selected value, comprising:
means responsive to said square wave electrical signal trailing and leading edges for producing a time variable electrical signal that is initiated at each said trailing edge, changes from a selected initial level with time toward another level at such a rate as to attain a selected second level only when said engine speed is less than said selected value and is terminated at each said leading edge;
means responsive to said time variable electrical signal attaining said selected second level when said engine speed is less than said selected value and the said leading edge of the next said square wave electrical signal for producing an electrical signal and to the said trailing edge of the same said square wave electrical signal for terminating said electrical signal; and
means for applying said electrical signal to said circuitry operative to effect engine speed ignition spark advance in such a manner as to inhibit the operation thereof.

4,373,489
SPARK TIMING CONTROL SYSTEM
Hiroshi Yamaguchi, Yokosuka, Japan, assignor to Nissan Motor Company, Limited, Yokohama, Japan
Filed Sep. 26, 1980, Ser. No. 190,952
Claims priority, application Japan, Sep. 28, 1979, 54-124172
Int. Cl.³ F02P *5/14*
U.S. Cl. 123—422 6 Claims

1. A spark-timing control system for controlling the timing of ignition spark in an internal combustion engine, said system being associated with a fuel control means for terminating fuel delivery to said engine when the engine speed is above a predetermined value and in the presence of a deceleration condition, said fuel control means being operable to resume fuel delivery to said engine in response to a demand therefor when the engine speed falls below the predetermined value or in the presence of an acceleration condition, said system including a digital computer operable to:
(a) calculate an optimum value of spark timing in terms of engine load at which said engine is operating;

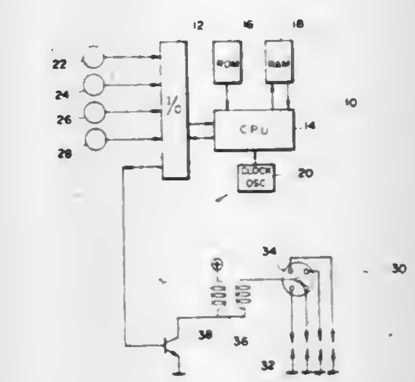

(b) retard the spark timing by a retard value with respect to the calculated optimum spark timing value upon the occurrence of a demand for fuel delivery resumption;
(c) maintain the spark timing of a series of successive sparks retarded by the retard value with respect to the calculated optimum spark timing value for a predetermined time after the occurrence of the demand for fuel delivery consumption; and
(d) after the step (c), gradually advancing the spark timing to the calculated optimum spark timing value.

4,373,490
FUEL INJECTION APPARATUS
Kei Kimata, Ama, and Tsugito Nakazeki, Iwata, both of Japan, assignors to NTN Toyo Bearing Company, Limited, Osaka, Japan
PCT No. PCT/JP80/00140, § 371 Date Jan. 14, 1981, § 102(e) Date Jan. 14, 1981, PCT Pub. No. WO81/00020, PCT Pub. Date Jan. 8, 1981
PCT Filed Jun. 20, 1980, Ser. No. 225,111
Claims priority, application Japan, Jun. 25, 1979, 54-80605
Int. Cl.³ F02D *3/00*
U.S. Cl. 123—452 9 Claims

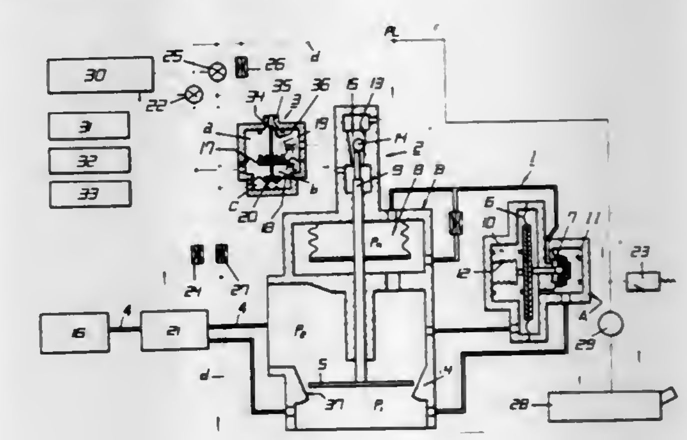

1. A fuel injection apparatus of the type comprising air flow rate detecting means having a servomechanism and a valve opening mechanism for maintaining at a predetermined value the pressure difference across a throttle valve disposed in a suction pipe and detecting the flow rate of air to an internal combustion engine from the degree of opening of said throttle valve, fuel flow rate measuring means disposed in a fuel supply passage and having a fuel measuring gate which is connected

to said throttle valve and whose degree of fluidcommunication uniquely corresponds to the degree of opening of said throttle valve, pressure adjusting means for regulating the pressure differences across said fuel measuring gate, a plurality of sensor means for sensing the operating conditions of the engine and for emitting sensed signals, electronic control unit means which receives said sensed signals and emits control signals based on said sensed signals, and a first solenoid valve disposed in a fuel pressure control circuit and adapted to be opened and closed by said control signals which are emitted from said electronic control unit means for adjusting a set value of said pressure adjusting means by the open-close action thereof to compensate the air-fuel ratio so as to adapt to all the operating conditions of said engine, characterized in that said fuel injection apparatus further comprises a second solenoid valve disposed in said fuel pressure control circuit in parallel with the first solenoid valve, said second solenoid valve being adapted to be opened and closed by output time ratio of fuel rich and lean signals which are emitted from said electronic control unit means so as to correct the basic air-fuel ratio determined in connection with said servo-mechanism of the air flow rate detecting means and said fuel measuring gate when said engine is in operating condition, thereby maintaining said fuel-air ratio at a desired constant value.

4,373,491
FUEL SUPPLY SYSTEM
Heinrich Knapp, Leonberg, Fed. Rep. of Germany, assignor to Robert Bosch GmbH, Stuttgart, Fed. Rep. of Germany
Filed May 21, 1981, Ser. No. 265,758
Claims priority, application Fed. Rep. of Germany, May 22, 1980, 3019544
Int. Cl.³ F02M *61/14*
U.S. Cl. 123—472 **4 Claims**

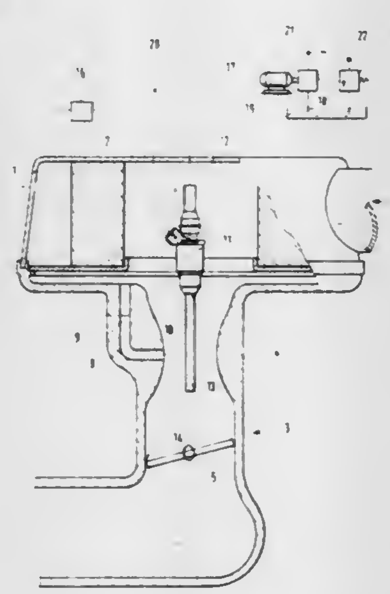

1. A fuel supply system for mixture-compressing internal combustion engines with externally supplied ignition comprising an air intake tube, an air filter positioned relative to said air intake tube, said air intake tube having a venturi-like section, an arbitrarily actuatable throttle device in said intake tube downstream of said venturi-like section, a fuel injection valve upstream of said throttle device for injecting toward said throttle valve a quantity of fuel corresponding to the quantity of air aspirated by the engine, an air bypass line connected to said venturi-like section of said air intake tube, an air flow rate meter in said air bypass line and further that said injection valve includes a portion arranged to protrude into said air filter upstream of said venturi-like section, and said injection valve comprises a slender mouthpiece which extends through said venturi-like section so that fuel can be ejected upstream of said throttle device downstream of said venturi-like section.

4,373,492
FUEL INJECTION PUMP FOR INTERNAL COMBUSTION ENGINE
Karl Konrath, Ludwigsburg, and Helmut Laufer, Stuttgart, both of Fed. Rep. of Germany, assignors to Robert Bosch GmbH, Stuttgart, Fed. Rep. of Germany
Filed Jul. 30, 1980, Ser. No. 173,509
Claims priority, application Fed. Rep. of Germany, Aug. 7, 1979, 2931908
Int. Cl.³ F02M *59/20*
U.S. Cl. 123—502 **1 Claim**

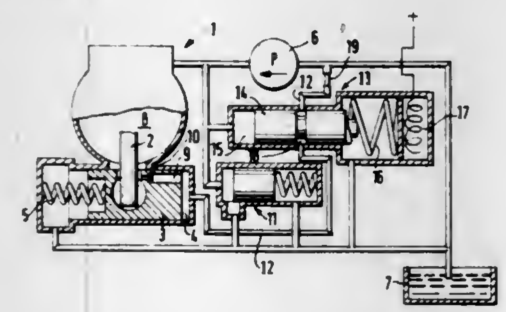

1. A fuel injection pump for internal combustion engines comprising a supply pump having a supply side and a suction side, a suction chamber which receives fuel from said supply pump, a piston cylinder juxtaposed said suction chamber in a fluid working relationship with said supply side of said pump, an adjusting piston in said piston cylinder, means extending from said suction chamber into said piston cylinder for movement by said adjusting piston; a piston restoring force means in one end of said piston cylinder and a work chamber in the end of said piston cylinder opposite from said restoring force means for adjusting said piston counter to a restoring force of said piston restoring force means, a throttle connection in said adjusting piston for admitting fluid under pressure from said supply pump to said work chamber in proportion to rpm for adjusting an injection onset of said pump, a pressure control valve for controlling fluid pressure from said supply pump to said restoring force end of said piston cylinder in accordance with rpm, a slide valve, a relief line connecting with said work chamber and to said suction side of said supply pump through a passageway in said slide valve so that pressure in said work chamber is variable by varying a control cross-section of said passageway which results in varying the injection onset of said pump by movement of said piston, said slide valve connected with said pressure side of said pump and said relief line operating to control the cross-section of said passageway in said slide valve; said slide valve including a control spring end and a pressure end, said control spring end including a control spring and a valve adjusting member therein, said slide valve being activated by fluid pressure as determined by said pressure control valve and said control spring, wherein an initial stress on said control spring is a function of said adjusting member in accordance with operational characteristics of said engine.

4,373,493
METHOD AND APPARATUS FOR UTILIZING GASEOUS AND LIQUID FUELS IN AN INTERNAL COMBUSTION ENGINE
James W. Welsh, 75 Templar Way, Summit, N.J. 07901
Filed Jun. 18, 1980, Ser. No. 160,501
Int. Cl.³ F02M *21/02, 13/08*
U.S. Cl. 123—525 **12 Claims**

1. A method for utilizing both gaseous and liquid fuels in a standard internal combustion engine utilizing a carburetor having a throttle valve therein for cutting off the supply of air and liquid fuel to the carburetor while the engine is in a no-load idle operating state, said method comprising:
supplying liquid fuel and air to the engine carburetor,
supplying gaseous fuel from a separate gaseous fuel reservoir at regulated pressure stored under substantially high pressure and released from the reservoir at a lower regulated pressure mixing said gaseous fuel with air from a supply independent of the liquid fuel air supply, and feeding the gaseous fuel and air mixture directly to the intake manifold of said internal combustion engine at a point between the carburetor throttle valve and the manifold,
controlling the flow of liquid fuel from said carburetor to said engine manifold to preclude feeding of liquid fuel to said manifold while the engine is in a no-load idling operating state,

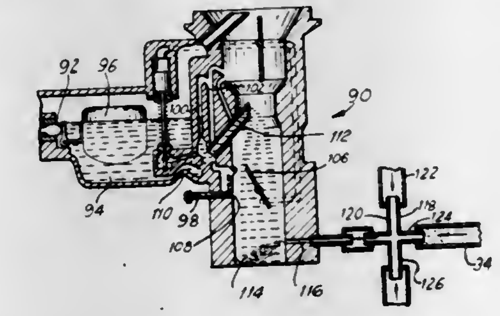

supplying only the gaseous fuel and air mixture to said engine manifold at a controlled rate while said engine is in said no-load idling state, and
feeding increasing quantities of both gaseous and liquid fuels to said manifold responsive to increasing engine loads, the feeding of gaseous fuel being controlled by the manifold vacuum, volume displacement of the engine cylinders.

4,373,494
TREATMENT OF FLUID HYDROCARBON FUELS WITH ELECTRIC FIELDS
Roy C. McMahon, Kansas City, Mo., assignor to Electrostatic Equipment Company, Kansas City, Mo.
Filed Aug. 27, 1980, Ser. No. 181,689
Int. Cl.³ F02M *27/04*
U.S. Cl. 123—538 **17 Claims**

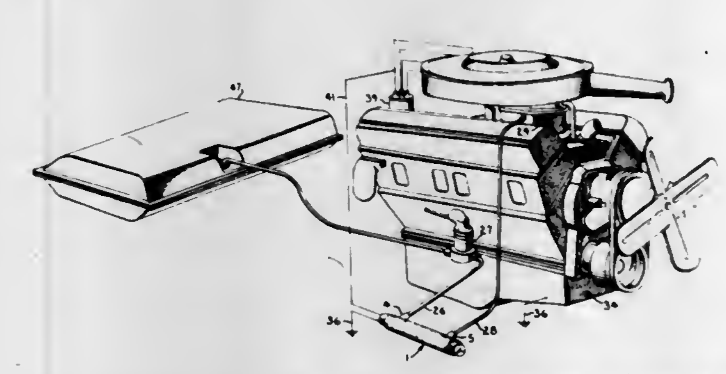

1. In combination with an internal combustion engine and a fuel source, a treater for treating a liquid hydrocarbon fuel to be combusted in said engine; said treater being fuel flow positioned between said fuel source and said engine so as to improve the combustion efficiency of the fuel; said treater comprising the combination of:
(a) an elongated conductive inner electrode;
(b) an elongated conductive cylindrical outer electrode positioned substantially coaxially about said inner electrode to define an elongated annular treater region therebetween;
(c) a dielectric covering on at least one of said electrodes to insulate said one of said electrodes from said fuel during treatment;
(d) fluid connection means at opposite ends of said outer electrode and communicating with said treater region, one of said fluid connection means being for connection to said fuel source and the other of said fluid connection means for connection to said engine;
(e) a plurality of dielectric particles positioned within said treater region;
(f) means retaining said dielectric particles within said treater region;
(g) high voltage supply means connected to said electrodes to provide a high intensity electric field between said electrodes within said treater region for treatment of fuel flowing therethrough to said engine.

4,373,495
PRESSURE TRANSDUCER FOR EXHAUST GAS RECIRCULATION SYSTEM
Cyril E. Bradshaw, Kalamazoo, Mich., assignor to Eaton Corporation, Cleveland, Ohio
Filed Nov. 28, 1980, Ser. No. 211,014
Int. Cl.³ F02M *25/06*
U.S. Cl. 123—568 **15 Claims**

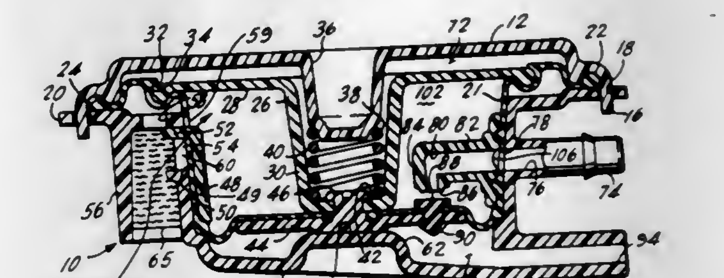

1. A pressure transducer for an internal combustion engine exhaust gas recirculation (EGR) system, said system having fluid lines connected to a carburetor venturi vacuum port, an EGR control valve, a ported manifold vacuum port in said carburetor, and a control pressure signal source, said transducer comprising,
(a) housing means, said housing means including structure defining a cavity therewithin;
(b) pressure responsive means disposed within said cavity, said pressure responsive means including a resilient diaphragm connected around the outer periphery thereof to said housing means;
(c) means for effecting a seal between said diaphragm and said housing means along a surface radially inwardly from the outer periphery thereof for dividing said diaphragm into outer and inner pressure responsive portions;
(d) reaction plate means connected to said diaphragm outer portion and said diaphragm inner portion for maintaining a spaced relationship therebetween and for movement therewith;
(e) means for biasing said reaction plate means and said diaphragm inner portion in one direction;
(f) said housing means, said diaphragm outer portion, and said reaction plate means cooperating to define a vacuum chamber;
(g) said reaction plate means and said diaphragm inner portion cooperating to define a vent chamber;
(h) said inner diaphragm portion and said housing means cooperating to define a control pressure chamber;
(i) said housing means including,
(i) means defining a vent port for communicating atmospheric air to said vent chamber;
(ii) means defining a fluid pressure signal output port adapted for connection to said EGR control valve line;
(iii) means defining a first vacuum signal supply port adapted for connection to said ported manifold vacuum line and in fluid communication with said vent chamber, and
(iv) means defining a second vacuum signal supply port adapted for connection to said carburetor venturi vacuum line; and
(j) means defining a valve seat disposed in said vent chamber and a valve surface movable with said reaction plate means toward and away from said valve seat, for regulating the fluid pressure at said output port means in response to pressure changes in said control chamber, vent chamber and vacuum chamber.

4,373,496

APPARATUS FOR CONTROLLING AN EXHAUST RECIRCULATION DEVICE IN INTERNAL COMBUSTION ENGINES

Max Greiner, Gerlingen; Klaus Krieger, Affalterbach, both of Fed. Rep. of Germany; Gottfried Schiller, Chicago, Ill.; Wolf-Rüdiger Walk, and Ludwig Walz, both of Stuttgart, Fed. Rep. of Germany, assignors to Robert Bosch GmbH, Stuttgart, Fed. Rep. of Germany

Filed Apr. 1, 1981, Ser. No. 206,594

Int. Cl.[3] F02M *25/06*

U.S. Cl. 123—569 **30 Claims**

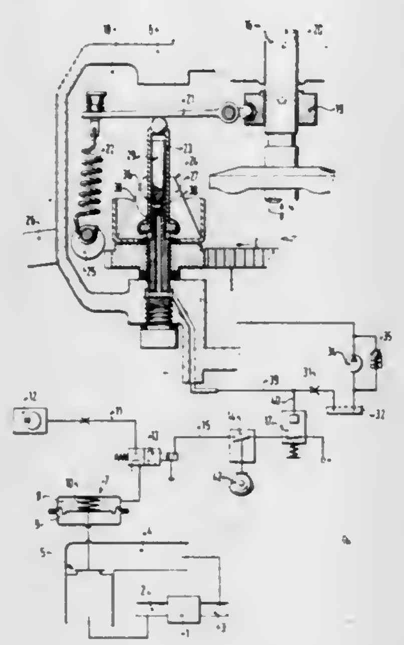

1. In combination with an exhaust gas recirculation device and a governor spring adjusting lever of a fuel injection pump of an internal combustion engine, said exhaust gas recirculation device including an exhaust gas recirculating line, an exhaust gas throttle device disposed in the exhaust gas recirculating line and an exhaust gas adjusting device disposed to actuate the exhaust gas throttle device, an improved apparatus for controlling the exhaust gas recirculating device, comprising:

switching means connected to the exhaust gas adjusting device;

control means connecting the switching means to the governor spring adjusting lever, and being responsive to the setting of the governor spring adjusting lever such that;

(a) said switching means actuates the exhaust gas adjusting device causing the exhaust gas throttle means to open thereby permitting exhaust gas recirculation for all settings of the governor spring adjusting lever less than a predetermined setting; and

(b) said switching means actuates the exhaust gas adjusting device causing the exhaust gas throttle means to close thereby blocking exhaust gas recirculation for all settings of the governor spring adjusting lever greater than a predetermined setting.

4,373,497

EXHAUST GAS RECIRCULATION CONTROL

Glen C. Hamren, Greentown, Ind., assignor to General Motors Corporation, Detroit, Mich.

Filed Sep. 21, 1981, Ser. No. 303,949

Int. Cl.[3] F02M *25/06*

U.S. Cl. 123—571 **3 Claims**

1. In combination with a fuel injected internal combustion engine having an air induction passage through which air is inducted into the engine, an exhaust discharge passage, and a fuel injection pump including a variable position fuel control element for controlling the quantity of fuel injected per engine revolution, an exhaust gas recirculation control system for variably controlling the amount of exhaust gas recirculated in accord with the quantity of fuel per revolution between a maximum amount at a first predetermined quantity of fuel per revolution and a minimum amount at a second predetermined quantity of fuel per revolution, comprising:

an exhaust gas recirculation means effective to recirculate exhaust gases from the exhaust gas discharge passage to the air induction passage;

means effective to measure the engine speed;

means effective to measure the position of the fuel control element, the fuel control element positions providing the first and second predetermined values of fuel quantity per revolution each changing at different rates as a function of speed throughout at least a major portion of the speed range of the engine;

means effective to adjust the amount of exhaust gases recir-

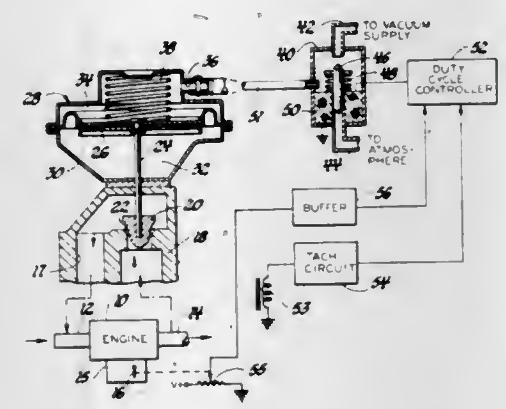

culated through the exhaust gas recirculation means in response to the average value of a control signal; and

means effective to vary the average value of the control signal between minimum and maximum values in response to variations in the position of the fuel control element, the rate of change of the average value of the control signal with varying positions of the fuel control element varying with engine speed inversely to the change in the range of positions of the fuel control element between the positions producing the first and second predetermined fuel quantities for each revolution, whereby the relationship between the exhaust gas recirculation amount and the quantity of fuel injected for each revolution is maintained substantially constant over the speed range of the engine.

4,373,498

EXHAUST GAS RECIRCULATION SYSTEM FOR INTERNAL COMBUSTION ENGINE

Shoji Ushimura, Yokosuka, Japan, assignor to Nissan Motor Company, Limited, Kanagawa, Japan

Filed May 20, 1980, Ser. No. 151,574

Claims priority, application Japan, May 22, 1979, 54-62269

Int. Cl.[3] F02M *25/06*

U.S. Cl. 123—571 **3 Claims**

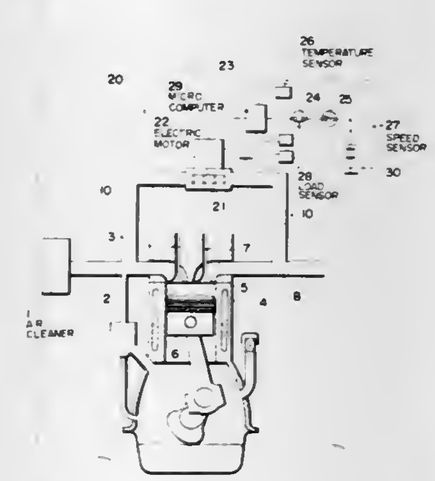

1. An exhaust gas recirculation system for an internal combustion engine comprising an intake passage and an exhaust passage, said system comprising:

a recirculation passage communicating between the exhaust passage and the intake passage; and

means disposed in the recirculation passage for impelling exhaust gas from the exhaust passage of the engine to the intake passage along the recirculation passage,

said impelling means including a blower or compressor for forcing a flow of exhaust gas, an electric motor for driving the blower or compressor, and means for controlling the motor.

4,373,499

VENTILATION CHECK VALVE FOR INTERNAL COMBUSTION ENGINES

Lothar Bendig, Ludwigsburg, Fed. Rep. of Germany, assignor to Filterwerk Mann & Hummel GmbH, Ludwigsburg, Fed. Rep. of Germany

Filed Aug. 21, 1981, Ser. No. 295,007

Claims priority, application Fed. Rep. of Germany, Aug. 27, 1980, 3032243

Int. Cl.[3] F02M *27/00*

U.S. Cl. 123—574 **9 Claims**

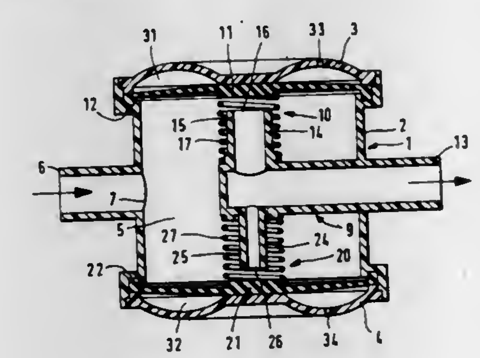

1. A suction-limiting check valve adapted for use in a pollutant ventilation line of an internal combustion engine which supplies negative pressure of differing levels to the ventilation line, as when the engine crankcase is to be ventilated into the engine intake duct downstream of the carburetor throttle, the check valve comprising in combination:

a valve housing enclosing a valve chamber, the valve housing having an inlet connectable to a space which is to be ventilated and an outlet connectable to a source of variable negative pressure;

first and second diaphragms forming hermetic flexible wall portions of the valve chamber, each diaphragm being circumferentially restrained and having at least a major portion of its outer surface exposed to atmospheric pressure;

first and second diaphragm biasing means applying a bias force to the respective diaphragms in opposition to the atmospheric pressure on their outer surface;

first and second diaphragm abutment means limiting the outward deflection of the respective diaphragms by the diaphragm biasing means, thereby defining diaphragm rest positions; and

first and second valve sockets communicating with the valve housing outlet and defining first and second valve mouths facing a central portion of the inner surface of the respective diaphragms, at an opening distance from the diaphragms in their rest position; and wherein

the first and second diaphragms and their respective biasing means and abutment means cooperate with the first and second valve mouths to form first and second valve devices in a parallel-operating relationship, each valve device responding independently to changes in the negative pressure in the valve chamber and in the housing outlet by closing at a predetermined level of increasing negative pressure in the valve chamber and by reopening at predetermined combined levels of decreasing negative pressure in the valve chamber and in the housing outlet, whereby the closing pressure level in the valve chamber differs from the reopening pressure level as a function of the area of the valve mouth and the level of negative pressure in the housing outlet;

the closing and reopening responses of the first and second valve devices; as determined by their respective diaphragms, diaphragm biasing and abutment means and the opening area and opening distance of their respective valve mouths, are unequal with regard to the levels of negative pressure in the valve chamber.

4,373,500

CARBURETOR AIR INJECTION SYSTEM

Louis E. Haynes, 302 S. 6th, Union City, Tenn. 38261

Filed Sep. 25, 1981, Ser. No. 305,791

Int. Cl.[3] F02M *23/04*

U.S. Cl. 123—587 **1 Claim**

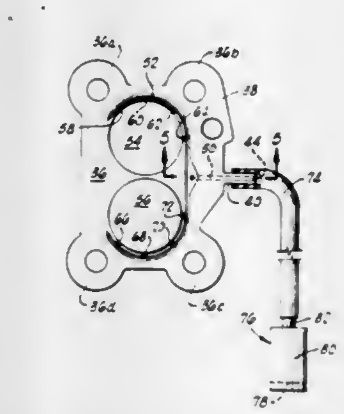

1. A carburetor injection system for reducing the suction developed by an intake manifold and for reducing the amount of heat transferred between an intake manifold and a carburetor, comprising:

a downdraft carburetor including at least one barrel:

an internal combustion engine including a plurality of spaced cylinders and an intake manifold communicating with said cylinders for charging a combustible mixture of fuel and air to said cylinders;

an automatic choke vlave in at least one barrel of said carburetor;

a flat, substantially rectangular air injector plate sealingly positioned between a carburetor and the intake manifold and including at least two fuel passage ports through the plate, said plate having:

a single auxiliary air inlet port extending through one edge of said plate and opening internally of said one edge along a part of one side of said plate which is closest to said intake manifold and said auxiliary air inlet port having a diameter between 3/64ths inch and 3/32nds inch, said diameter being non-varying throughout the length of said port;

air passageway means disposed in said one side of said air injector plate for conveying auxiliary air from said air inlet port to said fuel passage ports, said air passageway means comprising:

a curvilinear groove having a first semi-circular portion of uniform cross-sectioned configuration extending substantially halfway around a first one of said two fuel passage ports and also having a second semi-circular portion extending substantially halfway around a second one of said two fuel passage ports;

a capillary passageway connecting said curvilinear groove with said single auxiliary air inlet port so that substantially equal lengths of said curvilinear groove lie on opposite sides of the point of intersection of said capillary passageway with said curvilinear groove to substantially equally distribute to the first and second semi-circular portions air entering said curvilinear groove from said capillary passageway; and

a plurality of substantially equally spaced auxiliary air feed passageways extending radially inward from each of said semi-circular portions to communicate with the periphery of the respective fuel passage port over about 180° of the periphery of said port so that air is distributed evenly to the cylinders of said engine through said intake manifold;
a flexible tubing having a first end connected to said single auxiliary air inlet port and having a second end displaced from said first end;
air filter means, connected to said second end of said tubing, for filtering auxiliary air introduced into said auxiliary air inlet port through said flexible tubing;
a first tar paper gasket positioned between said one side of said air injector plate and said intake manifold;
a second tar paper gasket positioned between said air injector plate and said carburetor; and
a throttle valve positioned in at least one barrel of said carburetor between said automatic choke valve and said air injector plate.

4,373,501
FUEL METERING SYSTEM FOR AN INTERNAL COMBUSTION ENGINE
William G. Rado, Ann Arbor, Mich., assignor to Ford Motor Company, Dearborn, Mich.
Filed Sep. 17, 1981, Ser. No. 303,273
Int. Cl.[3] F02D *9/02*
U.S. Cl. 123—589 **2 Claims**

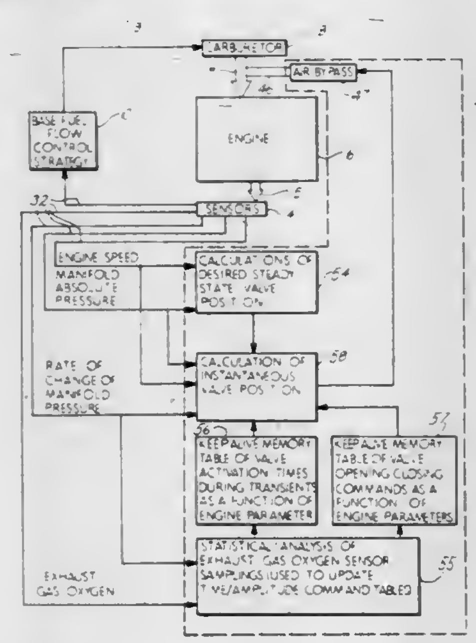

1. A method for controlling the air-fuel ratio for an internal combustion engine having an air supply passage by prepositioning an auxiliary air supply passage so the auxiliary air supply passage can be controlled to counteract a predicted transient, said method comprising:
generating a stored look-up table to govern the amount of change in the auxiliary air supply passage upon detection of a transient;
detecting a transient;
altering the amount of air flow in the auxiliary air supply passage as a function of the look-up table to maintain a desired air-fuel ratio;
adjusting the air flow in the auxiliary air supply passage to a value suitable for compensating for the next transient;
adaptively updating the table to take into account engine operation conditions by:
(a) sensing an exhaust gas oxygen sensor signal at predetermined intervals;
(b) modifying table values to provide a richer air-fuel average if there are a predetermined number of lean exhaust gas oxygen sensor indications;
(c) modifying table values to provide a leaner air-fuel average if there are a predetermined number of rich exhaust gas oxygen sensor indications; and
(d) producing no modification of the tables if the number of rich and lean indications are within a predetermined number of each other, so that said step of adjusting the air flow includes:
shutting off the auxiliary air passage when the engine is in a heavy cruise mode thereby creating the ability to turn on additional air when needed;
turning on the auxiliary air passage when the engine is in the idle mode so the auxiliary air passage is ready to be shut off under a sudden acceleration;
partly closing off the auxiliary air passage at part throttle steady state operation so as to be able to compensate in either direction; and
wherein the step of detecting a transient includes the step of detecting a minimum value of the rate of change of load at a given engine speed.

2. A fuel metering system for an internal combustion engine, the engine having a passage through which a mixture of air and fuel is introduced into a compression chamber of the engine, the fuel metering system comprising:
a fuel system for controlling the rate at which fuel is metered into the engine's intake passage;
a secondary path for injecting air into the combustion chamber of the engine and means for modifying the rate at which air passes through the secondary path and to preposition said secondary path to compensate for otherwise rapid changes in the air fuel ratio, said means for modifying the rate at which air is injected by the secondary path including a calculation means to calculate repetitively a value representing a current transfer rate of air through the main passage, a desired air fuel ratio, and an amount of air needed from the secondary path, so that said means for modifying the rate at which air is injected by the secondary path prepositions said secondary path to be able to counteract a predicted transient;
said calculation means including:
stored look-up tables which are adaptively adjusted to provide settings of the ability of the secondary path to pass air, the adaptive adjustment taking place as a function of engine operating conditions;
a computation means for determining a desired steady state valve position to set the ability of the secondary path to pass air, said computation means receiving as input information an engine load indicating parameter;
a statistical analysis means to analyze an input from an exhaust gas oxygen sensor samplings to update time and amplitude look-up tables governing the change in valve position to set the ability of the secondary path to pass air, said statistical analysis means receiving input information of exhaust gas oxygen sensor sampling and the rate of change of manifold pressure;
memory table means coupled to said statistical analysis means for storing valve activation times during transient as a function of engine parameters;
a secondary memory table means of valve opening and closing commands as a function of engine parameters, said keep-alive second memory table being coupled to said statistical analysis means; and
a second computation means for calculating the instantaneous valve position, said calculation means being coupled to receive engine speed, manifold absolute pressure, rate of change of manifold pressure, information from said second keep-alive memory table means and information from second computation means of desired steadty state valve position, and having an output coupled to the valve setting ability secondary path to said air.

4,373,502
FUEL CONTROL SYSTEM
Ronald Re, Newark, Del., assignor to Miletech, Inc., Greenville, Del.
Continuation-in-part of Ser. No. 197,695, Oct. 16, 1980, abandoned. This application Mar. 16, 1981, Ser. No. 244,067
Int. Cl.[3] E02M *7/22*
U.S. Cl. 123—512 **16 Claims**

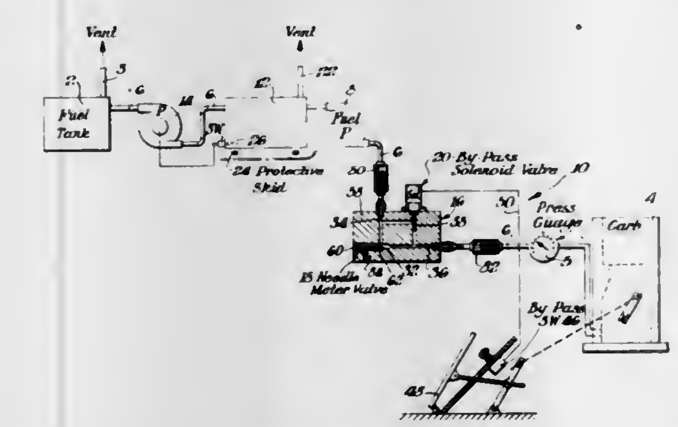

1. In a fuel control system for gasoline-operated motor vehicles having a main storage tank and a fuel pump connected in the fuel line between the main storage tank and the float bowl of a carburetor for feeding gasoline to the carburetor, the improvement being a control system mounted to said fuel line between said fuel pump and said carburetor whereby said control system is adapted to be installed into already existing systems of motor vehicles, said control system including an operating tank mounted to said fuel line downstream from and in flow communication with said main storage tank, vent means for said operating tank, metering means in said fuel line downstream from said operating tank for controlling the rate of fuel flowing to said carburetor, said metering means including a main valve for providing a fixed rate of flow to said carburetor and a selectively operated by-pass valve for providing an increased rate of flow to said carburetor, said main valve and said by-pass valve being mounted in a common housing, said common housing having an upstream inlet line and a downstream outlet line, connecting means connecting said inlet line to an upstream portion of said fuel line between said fuel pump and said housing, and connecting means connecting said outlet line to a downstream portion of said fuel line between said housing and said carburetor.

4,373,503
SLINGSHOT WITH OUTER SLEEVE FOR ELASTIC BAND PROTECTION
Charles A. Saunders, Columbus, Nebr., assignor to Saunders Archery Co., Columbus, Nebr.
Filed Oct. 13, 1977, Ser. No. 841,824
Int. Cl.[3] F41B *7/00*
U.S. Cl. 124—20 R **4 Claims**

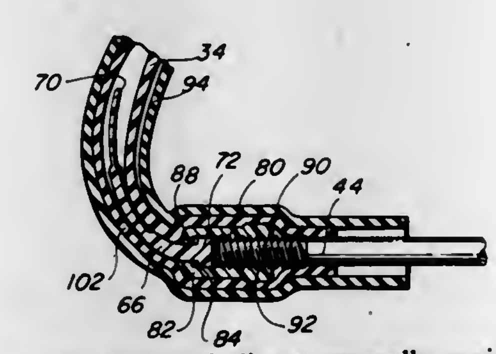

1. In a slingshot including a generally upright handle, rod means for securing missile-projecting elastic band means to said handle, fastening means for attaching said rod means to said handle, elastic band means for projecting a projectile, said rod means terminating in hook elements having rearwardly directed free ends for attachment of said elastic band means thereto over each of said ends of said hook elements,
the improvement comprising:
flexible and resilient tube means for protecting said elastic band means from fold-over fatigue and wear due to forward displacement of said band means and pivotal fold-over thereof about said ends of said hook elements upon elastic release and recoil of said band means in projecting a projectile,
said tube means being sleeved over said elastic band means coaxially therewith along a lineal sector overlying a zone of attachment of said band means to said hook elements,
said tube means being in contiguous, embracing contact with said elastic band means in said zone of attachment thereof to said hook elements and extending rearwardly of said ends of said hook elements, and
said tube means being a flexible bend-limiting restraining element to obviate sharp reverse folding of said elastic band means upon distention and release of the stretched elastic band means in projecting a projectile.

4,373,504
GAS BURNER CONVECTION OVEN
William J. Day, Allentown, Pa., assignor to Raytheon Company, Lexington, Mass.
Continuation of Ser. No. 4,007, Jan. 16, 1979, abandoned. This application Dec. 22, 1980, Ser. No. 219,413
Int. Cl.[3] F24C *15/32;* **A21B** *1/00*
U.S. Cl. 126—21 A **2 Claims**

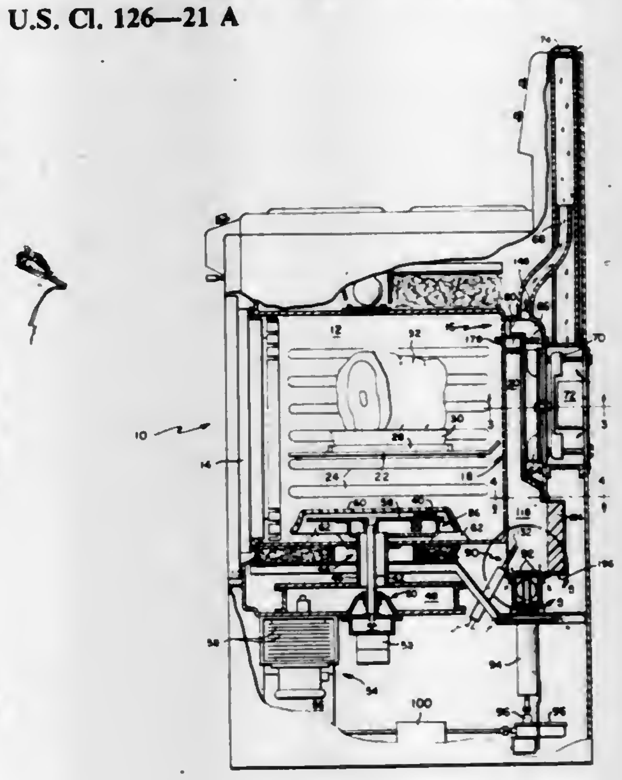

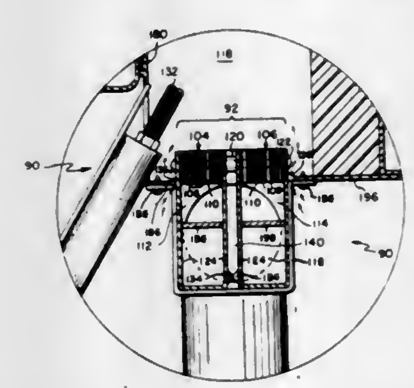

1. A convection oven comprising:
a substantially rectangular oven cavity having a front access door;
a blower system positioned behind the rear wall of said cavity for circulating vapor through said cavity;
means for supplying heat to said vapor comprising a burner

positioned behind said rear wall below the vapor input to said blower system;

said burner comprising ribbons of corrugated metal separated by flat metal ribbons defining primary fuel-air ports, each of said primary fuel-air ports being separated by fewer than four intervening fuel-air ports from a source of secondary air; and

said blower system drawing a primary fuel-air mixture through said fuel-air ports and drawing secondary air from said source of secondary air.

4,373,505
ADJUSTABLE VENTURI TUBE ASSEMBLY FOR A GAS BARBECUE GRILL
Walter Koziol, Antioch, Ill., assignor to Modern Home Products Corp., Antioch, Ill.
Continuation-in-part of Ser. No. 940,215, Sep. 7, 1978, Pat. No. 4,267,816. This application Mar. 3, 1981, Ser. No. 239,999
Int. Cl.[3] F24C *3/00*
U.S. Cl. 126—39 E 13 Claims

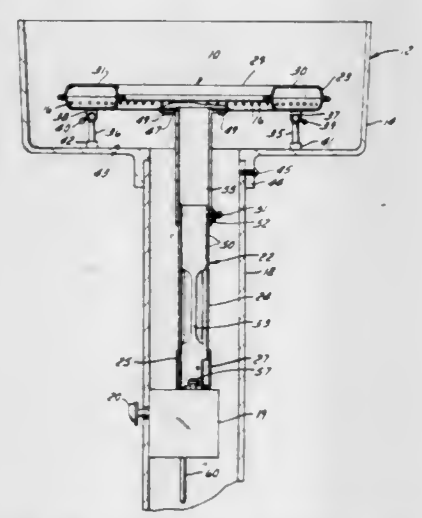

1. An improved gas venturi tube assembly for a gas burner element comprising:

a tubular member defining at least one lateral aperture;

an air regulator member slidably received by said tubular member at one end thereof to controllably cover said lateral aperture;

an opening defined by said regulator member adapted to receive a gas supply nozzle;

a gas intake conduit having an end for operative association with said burner element at one end and in telescoping relationship with said tubular member at the other end; and

adjustable securing means operatively associated with said tubular member and said intake conduit to secure said conduit and said tubular member in a fixed position.

4,373,506
STOVE WITH CO-AXIAL VENT AND FLUE DESIGN
James R. Hyatt, Rte. 1, Box 267-A, Clarkton, N.C. 28433
Filed May 8, 1980, Ser. No. 148,187
Int. Cl.[3] F24B *3/00, 7/00*
U.S. Cl. 126—67 2 Claims

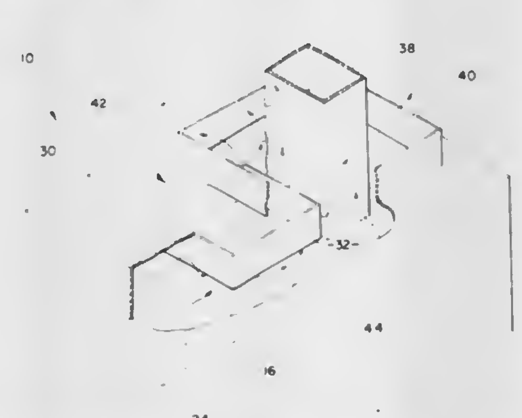

1. A forced air stove having a unique co-axial flue and vent design for effectively capturing heat around the firebox and the flue extending therefrom, comprising: a rectangular firebox having a surrounding wall including a generally horizontal top structure and adapted to receive and burn combustible fuel material such as wood and coal therein; access door means operatively associated with said firebox for gaining access thereto; an outer wall structure disposed outwardly of the wall structure of said firebox over a substantial area of said firebox for defining an air passageway therebetween where the defined air passageway acts to channel air around the firebox when material is being burned therein such that the heat from the material being burned may be transferred to the passing air; said outer wall structure having a top including a horizontally disposed top portion that extends generally parallel to said top of said firebox; fan means operatively associated with said stove and communicatively connected with said defined air passageway for generating a system of air and forcing the same through said air passageway; flue means communicatively connected to the top of said firebox and extending therefrom through the air passageway defined exteriorly of said firebox and on through the plane of the top portion of said outer wall structure overlying the top of said firebox wherein flue gases resulting from the combustion within the firebox may pass therethrough; a vent opening formed in the top portion of said outer wall structure around the upwardly extending flue; vent means disposed outwardly of and around said flue and communicatively connected to the vent opening and said air passageway and connected to and extending from the top portion of the outer wall structure in co-axial relationship with said flue means such that heat being exhausted by said flue means must pass in close heat exchange relationship with flue gases passing from said firebox through said flue means, and wherein said co-axial relationship between said flue means and said vent means assures that the air passing through one must pass within the other although in separate relationship; humidifier means operatively associated with said stove and generally disposed in association with said defined air passageway for transferring moisture to the heated air passing therethrough, said humidifier means including a water container disposed within said defined air passageway in the path of the passing air wherein the water container acts to transfer moisture to the passing heated air and wherein said water container is oriented transverse to the general direction of air flow within said defined air passageway and vertically spaced over the passing air flow such that the passing air flow is constrained to pass thereunder after which the air flow may turn approximately 90 degrees and move up one side of the water container and on up adjacent the open top thereof.

4,373,507
STOVE CONSTRUCTION
Larry A. Schwartz, Warwick; Robert Geiter, Coventry, and Peter S. Albertsen, Quidnesset, all of R.I., assignors to Jamestown Group, Providence, R.I.
Filed Oct. 9, 1980, Ser. No. 195,399
Int. Cl.[3] F23V *15/00;* F23L *11/00*
U.S. Cl. 126—289 8 Claims

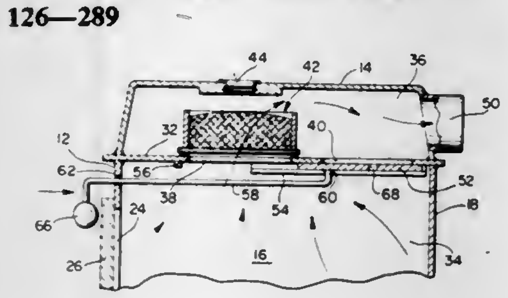

1. A stove comprising front, rear, top, bottom and side walls, a door on said front wall movable between a closed and open position to permit access to the stove interior, a substantially horizontal partition in said stove located in spaced relation to but adjacent said top wall defining a relatively large combustion chamber therebelow and a relatively small afterburn chamber thereabove, an exhaust duct communicating with said afterburn chamber and draft means communicating with said combustion chamber, said partition having two openings therein, a catalytic converter mounted on said partition in registry with one of said openings whereby all gases passing through said one opening pass through said converter, damper means movable between a first position wherein said one opening is unobstructed and said other opening is substantially blocked, and a second position wherein said other opening is unobstructed and said one opening is substantially blocked, and handle means operable from outside the stove to move said damper between said first and second positions, said handle means blocking opening movement of said door when said damper is in its said first position, whereby said door can be opened only when said damper has been moved to its said second position.

4,373,508
ADJUSTABLE MEANS FOR SUPPORTING COMBUSTIBLE MATERIAL
Richard D. Northcraft, Rte. 3, Box 450, Escondido, Calif. 92025
Division of Ser. No. 84,621, Oct. 12, 1979, abandoned. This application Jun. 19, 1981, Ser. No. 275,371
Int. Cl.[3] F23H *13/00*
U.S. Cl. 126—298 8 Claims

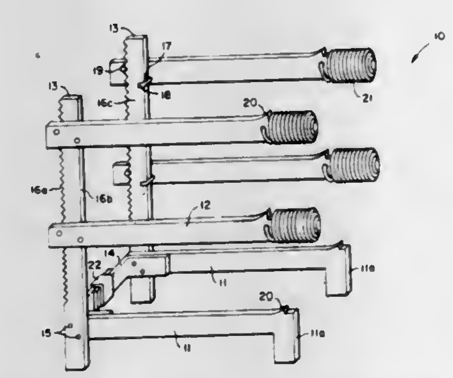

1. In an andiron for supporting combustible logs, said andiron having a base portion, at least one vertical member projecting upwardly from said base portion, at least one lateral member adjustably supported on one side of said vertical member, there being spaced abutment members projecting from one side of each lateral member towards and frictionally engaging opposite edge portions of one of said vertical members to hold said lateral member in a selected position of adjustment on said vertical member, the spacing between said abutment members being greater than the spacing between said opposite edge portions of said vertical member such that upward swinging movement of said lateral member about one of said abutment members releases said frictional engagement to permit vertical movement of said lateral member along said vertical member, the improvement wherein one of said abutment members engages said vertical member only on the edge portion thereof opposite that with which the other abutment member is in engagement, said other abutment member being formed with shoulder means in overlapping engagement with a surface portion of said vertical member on the side thereof opposite said lateral member when said lateral member is in said selected position to thereby prevent relative separating movement of said vertical and lateral members, said shoulder means being spaced from the other of said abutment members a distance greater than the spacing between said opposite edge portions of said vertical member such that said upward swinging movement of said lateral member about the longitudinal axis of the abutment member in engagement with only the edge portion of said vertical member permits movement of said shoulder means out of said overlapping engagement with said vertical member surface portion to thereby permit relative separating movement of said vertical and lateral members.

4,373,509
HIGH EFFICIENCY VENTILATION SYSTEM
Emery W. Neitzel, Rothschild, and Jerome A. Schumacher, Wausau, both of Wis., assignors to Greenheck Fan Corporation, Schofield, Wis.
Filed Oct. 20, 1980, Ser. No. 198,588
Int. Cl.[3] F21C *15/08;* F23J *11/00*
U.S. Cl. 126—299 D 9 Claims

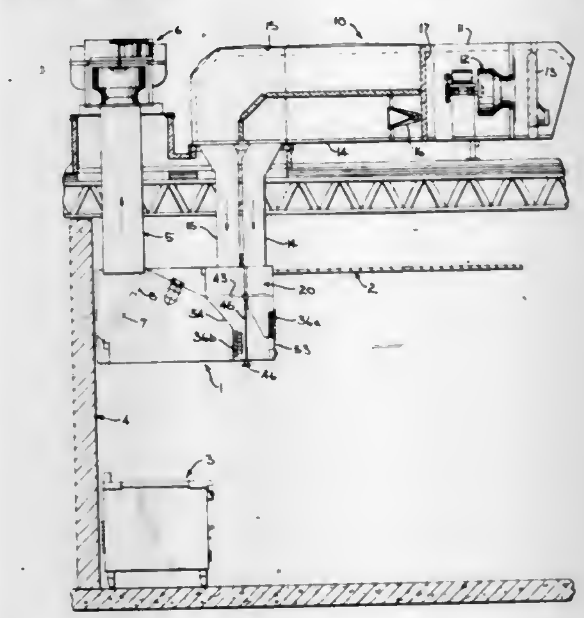

1. A ventilation system for a room which comprises:

a make-up air supply system including an inlet duct, a fan for supplying a substantially constant volume of fresh air to the inlet duct, a tempered air duct connected to the inlet duct and including means for conditioning air flowing therethrough, and a fresh air duct connected to the inlet duct;

a hood disposed within the room and having a fresh air register coupled to the fresh air duct and positioned to direct fresh air beneath the hood and having a tempered air register coupled to the tempered air duct and positioned to direct tempered air into the room, the hood also including damper means for changing the relative amounts of air flowing through the tempered air register and the fresh air register without changing the combined amount of air flowing through both of said registers; and

an exhaust system having an exhaust duct coupled to the hood and an exhaust fan for withdrawing a substantially constant amount of air from beneath the hood through the exhaust duct.

4,373,510
VENTING SYSTEM FOR OIL OR GAS-FIRED APPLIANCES
Donald L. Smith, 452 Nassau Ave., Bolingbrook, Ill. 60439
Filed Apr. 17, 1980, Ser. No. 141,261
Int. Cl.[3] F23J *11/00;* E04F *17/04*
U.S. Cl. 126—307 A 5 Claims

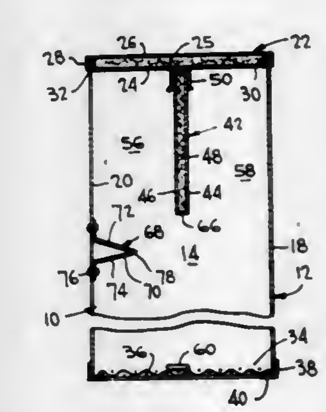

1. In combination with an oil or gas-fired appliance having a

base, an upper portion and having a combustion chamber provided with a plurality of burners each having a flue leading to a collection box within the appliance and a flue outlet disposed in the upper portion for the outlet passage of combustion gases from the collector box to be conveyed to a chimney flue for the appliance: a venting system for the collector box of the combustion chamber comprising a first piping for the outlet of combustion gases from the collector box connected to the flue outlet, a second piping connected to the chimney flue, an elongate diverter box disposed in the path of the combination gases between the collector box and the chimney flue and vertically arranged exteriorly of the appliance and having a first and second set of opposing vertical walls and having an upper portion with a top wall and a lower portion, a heat resistant baffle depending from the top wall and sealingly transversely extending between the walls of one set of walls parallel with the walls of the second set and centrally disposed between the walls of the second set to divide the upper portion of the interior of the diverter box into a flue gas inlet section with which the first piping communicates and a vent gas outlet section with which the second piping communicates, said diverter box having a bottom in its lower portion provided with a substantial opening disposed well above the base of the appliance with said opening being at least at or above the horizontal level of the burners and in constant free communication with the atmospheric air surrounding the appliance which air enters the diverter box through the opening in the bottom to establish a thermal barrier, said baffle having a free lower end terminating a substantial distance above the opening in the bottom and a turning vane positioned slightly below the free lower end and carried by the wall of the second set on the flue gas inlet side of the baffle so that flue gases flowing downwardly in the flue gas inlet section impinge on the vane and are turned immediately under the lower end of the baffle to flow upwardly in the vent gas outlet section with the cold air entering through the opening in the bottom establishing a thermal barrier to slow down the speed of the hot gases in the flue gas inlet section, and with the baffle forming a heat lock in the combustion chamber to prevent heat waste through the chimney flue and with said turning vane being downwardly sloped from the carrying wall and having a free tip disposed below the free end of the baffle and between its carrying wall and the baffle.

4,373,511
COOKING VESSEL
Derek A. Miles, and Julie M. T. Miles, both of Quinta da Pena Rau da Pena, 4100 Porto, Portugal
Filed May 27, 1980, Ser. No. 153,606
Int. Cl.³ F24D *1/00*
U.S. Cl. 126—369 **15 Claims**

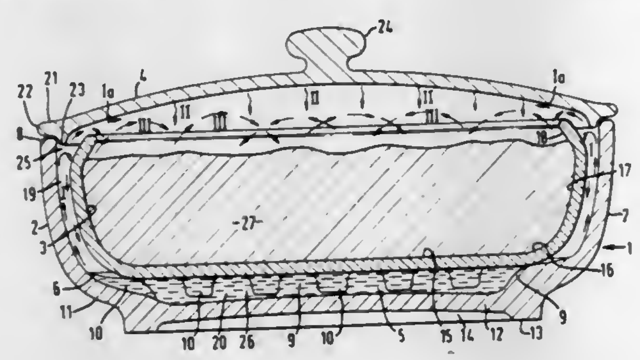

1. A cooking vessel for oven cooking comprising an outer vessel to contain a quantity of water, an inner vessel to contain foods, and a lid to close said outer vessel, wherein said outer vessel is formed with a well at its lower end, support means are provided in said outer vessel for supporting said inner vessel above said well with the outer face of a sidewall of said inner vessel spaced inwardly from the inner face of a sidewall of said outer vessel to provide an annular gap and with passages communicating said well with said annular gap; said inner vessel and said outer vessel and said lid are relatively so shaped and located one within another as to form therebetween a space of which space said annular gap forms a part; said inner vessel and said lid are relatively so shaped and disposed as to form a further space therebetween above food contained in said inner vessel; and wherein, when said cooking vessel is heated in an oven, a controlled release, circulation and re-condensation of water vapor from said water contained in said outer vessel occurs in said space and a controlled release, circulation and re-condensation of further water vapor from said food contained in said inner vessel occurs in said further space, with relatively little mixing of said water vapor and said further water vapor and without undue loss of said water vapor from said cooking vessel, after initial heating of said outer vessel and lid in the oven.

4,373,512
METHOD AND APPARATUS FOR PROTECTING AN ARRANGEMENT LOCATED IN AN AREA OF HIGHLY CONCENTRATED RADIATION
Alfred Hirt, Munich, Fed. Rep. of Germany, assignor to Maschinenfabrik Augsburg-Nurnberg Aktiengesellschaft, Munich, Fed. Rep. of Germany
Filed Jan. 29, 1981, Ser. No. 230,102
Claims priority, application Fed. Rep. of Germany, Feb. 8, 1980, 3004582
Int. Cl.³ F24J *3/02*
U.S. Cl. 126—418 **10 Claims**

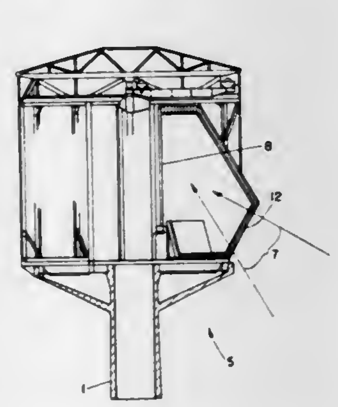

1. In a method for protecting an arrangement located in a region of highly-concentrated radiation, including a solar radiation receiver of a field of solar heliostats, the improvement comprising in diffusing radiation in the path of radiation directed towards the arrangement by directing a radiation diffusing fluid into said path of radiation such that the fluid itself causes diffusion of the radiation in said path.

9. Device for protecting an arrangement located in a region of highly-concentrated radiation, said arrangement comprising an apertured receiver of a gas tower-solar tower project having a heat exchanger unit and a hot gas turbine connected thereto; a firing or spraying device being located in the upper region of the gas tower supporting the receiver or on the receiver, said firing or spraying device being adapted to direct a smoke producing medium or water vapor into the path of radiation between a controlled heliostat system and the receiver.

4,373,513
HIGH-EFFICIENCY NON-TRACKING SOLAR COLLECTOR DEVICE
Peter Materna, 943 Lanning Ave., Lawrenceville, N.Y. 08648
Filed Jun. 17, 1980, Ser. No. 160,552
Int. Cl.³ F24J *3/02*
U.S. Cl. 126—422 **15 Claims**

1. A radiant energy receiver operable between minimum and maximum operating temperatures, comprising:

a plurality of fluid conductors of predetermined crosssectional area, thermally isolated from each other and presenting parallel paths to a common flow input;

a fluid disposed in said plurality of fluid conductors having a negative thermal coefficient of viscosity such that the viscosity of said fluid changes at least by a factor of 5 in response to said fluid being heated and cooled between the minimum and maximum operating temperatures of said receiver, said fluid having minimum and maximum viscosities at the maximum and minimum operating temperatures of said receiver, respectively:

successive ones of said plurality of fluid conductors receiving radiant energy with others of said plurality of fluid conductors remaining unenergized, depending upon the time of day and time of year;

energy utilization means in thermal communication with said fluid;

means for circulating said fluid through said ones of said fluid conductors and said energy utilization means;

said fluid acting as a valving means responding to said fluid being heated and cooled to permit the flow of said fluid through said successive ones of said plurality of fluid conductors receiving radiant energy, and to stop the flow of said fluid through said others of said plurality of fluid conductors remaining unenergized.

2. A high efficiency non-tracking solar collector device

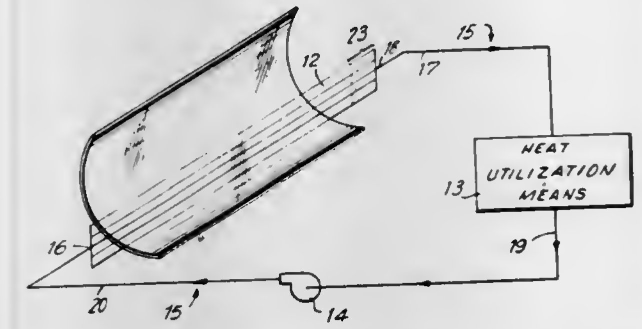

comprising an elongate concentrator means configured to concentrate incident light along a band extending parallel to the axis of said reflector, the transverse position of said band varying as a function of the incident angle of light on said reflector, a collector assembly having a receptor surface spaced from said reflector in accordance with the focal length of said reflector, said surface having a longitudinal extent substantially coincident with the lenth of said band and a lateral extent substantially coincident with the extreme positions assumed by said band responsive to the impingement of useful incident light on said collector, characterized in that said collector assembly defines a liquid container bounded by and in heat conductive relation to said receptive surface, said container being divided into a plurality of side-by-side abutting flow passages extending parallel to the axis of said reflector, an entrance and an exit manifold formed on said container, each said manifold communicating with all said passages, pump means for circulating liquid from said entrance to said exit manifold through said passages and a liquid in said system subject to viscosity changes in the range of temperatures encountered in said collector assembly whereby the viscosity of fluid in the respective passages is a function of the temperature of the liquid therein and, accordingly, the flow rate is maximized through the hottest said passages.

4,373,514
DEVICE FOR COLLECTING, TRANSMITTING AND USING SOLAR ENERGY
Lambros Lois, 6104 Dunleer Ct., Bethesda, Md. 20034
Filed Apr. 2, 1980, Ser. No. 136,612
Int. Cl.³ F24J *3/02*
U.S. Cl. 126—438 **17 Claims**

1. A transmission device for transmitting a beam of collimated solar energy from a solar energy collector/concentrator/collimator to an associated solar energy use or storage device, said beam having a propagation axis defined by the line formed by the center of said beam along its direction of travel, said transmission device comprising:

a plurality of modular, interconnected solar energy transmission tubes, said plurality of tubes having a transmission axis defined by the interconnection of the longitudinal axes of said tubes,

each tube having walls smooth and highly reflective to solar radiation,

at least one tube being an angled tube wherein the walls thereof form an angle at at least one position thereof whereby the longitudinal axis of said angled tube is changed in direction by the same angle at said position; and said angled tube having an interior beam diverting means, located inside at said position, whereby the direction of radiation propagating along the longitudinal axis of said angled tube is changed by said angle at said position,

each non-angled tube having an alignment sight disposed on its exterior at each end such that a line drawn through the

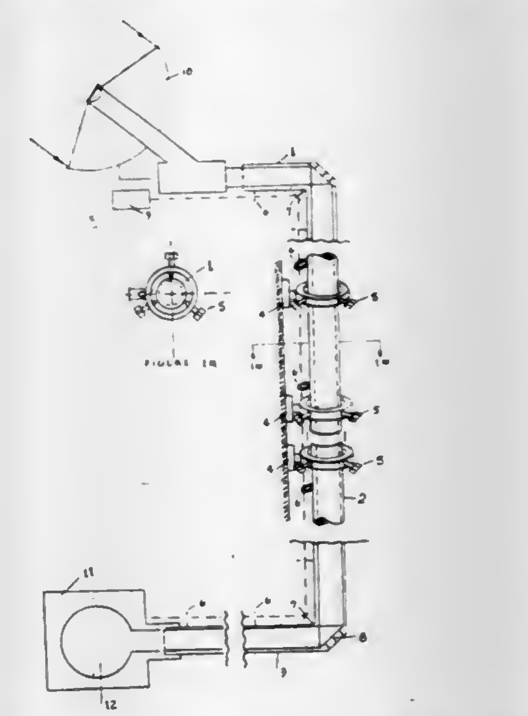

center of said sights will be parallel to the longitudinal axis of said tube, and each angled tube having an alignment sight disposed on its exterior at each end and also having an external beam diverting means disposed on its exterior at the position of said angle such that light propagating parallel to the longitudinal axis of one side of said angled tube and passing through the sight disposed on the end of the same side will be diverted at said external beam diverting means to propagate along a direction parallel to the longitudinal axis of the other side of said angled tube and pass through the sight disposed at the end of said other side; said sights providing means by which said transmission axis of said plurality of tubes can be aligned to essentially coincide with said beam propagation axis

wherein at least one of said modular tubes is provided with longitudinally parallel, exterior fins by which heat is dissipated from said tube.

4,373,515
SOLAR COLLECTOR
Raleigh E. Morgan, 461 E. Santan, Chandler, Ariz. 85224
Filed Jul. 31, 1980, Ser. No. 173,955
Int. Cl.³ F24J *3/02*
U.S. Cl. 126—438 **8 Claims**

1. A solar collection for receiving solar radiation and for utilizing the energy therein to increase the temperature of a fluid medium, said solar collector comprising:

a. a first plurality of hollow cylindrical energy accumulators, each energy accumulator having an outer surface, a portion of said surface being directly exposed to said solar radiation, and each energy accumulator having first and second holes therethrough proximate each end thereof;

b. a second plurality of arcuate reflectors, each reflector spaced from and associated with a different one of said accumulators and having a reflection surface for receiving solar radiation and redirecting said radiation to the surface of its associated accumulator, each of said second plurality of reflectors having a first aperture therethrough at a first end thereof and a second aperture therethrough at a second end thereof;

c. a third plurality of conduits for circulating said fluid medium therethrough, each of said conduits residing in juxtaposition with the surface of an associated one of said first plurality of accumulators, the temperature of said fluid medium being elevated in response to transfer of said

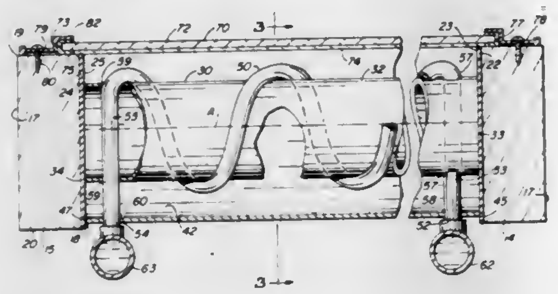

energy from said energy accumulators, each of said third plurality of conduits having a first terminal end portion passing through the holes in the first of its associated collector and through the aperture in a first end of its associated reflector, and having a second terminal end portion passing through the holes in each second end of its associated collector and through the aperture in the second end of its associated reflector;

d. a fluid medium supply line coupled to each of said first terminal end portions of each of said third plurality of conduits for supplying said fluid medium thereto; and

e. a fluid medium outlet line coupled to each of said second terminal end portions of each of said third plurality of conduits for receiving said fluid medium therefrom.

4,373,516

APPARATUS FOR CHIROPRACTIC THERAPY AND MASSAGE

Teruo Masuda, Itaukaichi; Masayasu Morita, Fuchu; Kazuyuki Yamaguchi, Sayama, and Yoshikazu Harada, Akishima, all of Japan, assignors to France Bed Co., Ltd., Tokyo, Japan

Filed Dec. 5, 1980, Ser. No. 213,647

Claims priority, application Japan, Dec. 27, 1979, 54-180193[U]; Dec. 27, 1979, 54-180194[U]; Apr. 8, 1980, 55-47562[U]; May 15, 1980, 55-64278; May 15, 1980, 55-66578[U]; May 15, 1980, 55-66579[U]

Int. Cl.^{3} A61H *1/00*

U.S. Cl. 128—57 **14 Claims**

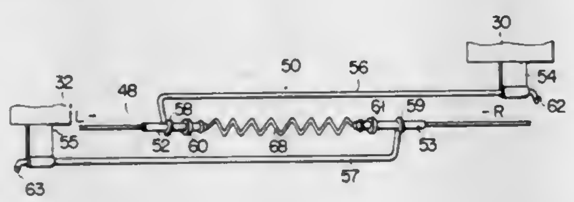

1. An apparatus for chiropractic therapy and massage comprising a housing on which an user may lie, pressure means including a number of pressure rollers disposed in the housing and adapted to roll to apply pressure on the body of the user lying on the housing, a support frame provided in the housing and supporting the pressure means, a pair of pulleys provided in the housing, and a wire stretched between the pulleys to reciprocate the support frame, characterized in that the apparatus further comprises:

means coupled to both ends of said wire for absorbing the elongation and contraction of said wire; and

means coupling both ends of said wire to said support frame for transmitting the driving force of said wire directly to said support frame without transmitting the driving force to said absorbing means.

4,373,517

ORTHOPEDIC ARM AND SHOULDER BRACE

James M. Criscuolo, New York, N.Y., assignor to Thomas E. Spath, Brooklyn, N.Y.

Filed Aug. 12, 1980, Ser. No. 177,477

Int. Cl.^{3} A61B *17/18*

U.S. Cl. 128—75 **7 Claims**

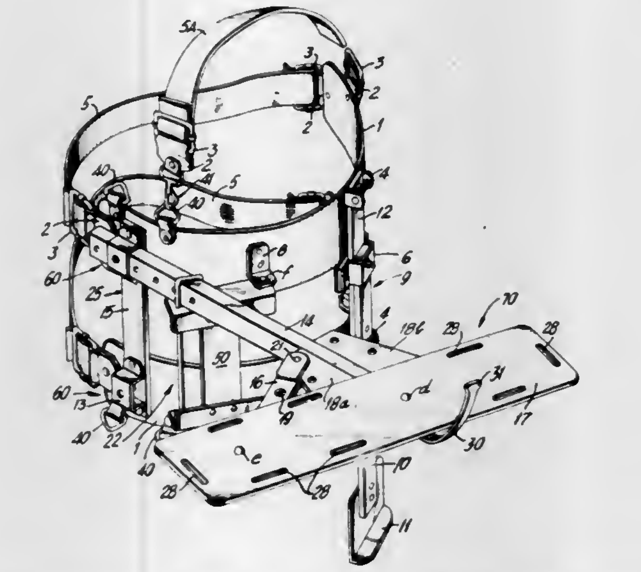

1. In a reversible orthopedic brace device for use on a human being to immobilize and support the arm and shoulder of the wearer consisting of a pair of upper and lower adjustable, generally parallel rigid bands terminating at positions approximating the chest and back of the wearer, and fastening means associated with the bands for mounting laterally the bands on the human torso, the improvement which comprises:

(a) at least three vertically mounted rigid assemblies, the upper and lower ends of which are secured to the upper and lower rigid bands to thereby join the bands in a unitary structure;

(b) a generally horizontal arm support assembly terminating at one end in a pivotally mounted, adjustable horizontal plate adapted to receive and support the forearm of the wearer; and

(c) a vertical hip support bar terminating in a flat L-shaped plate; wherein at least two of the vertically mounted rigid assemblies cooperate to receive and adjustably secure the horizontal arm support assembly, and a third vertically mounted rigid assembly is adapted to receive and adjustably secure the vertical hip support bar to position the L-shaped plate proximate to the hip of the wearer.

4,373,518

METHOD OF DRILLING LIVING BONE

William L. Kaiser, Warsaw, and Gale R. Brown, South Whitley, both of Ind., assignors to Zimmer, Inc., Warsaw, Ind.

Filed Sep. 26, 1980, Ser. No. 191,187

Int. Cl.^{3} A61F *5/04*

U.S. Cl. 128—92 EB **1 Claim**

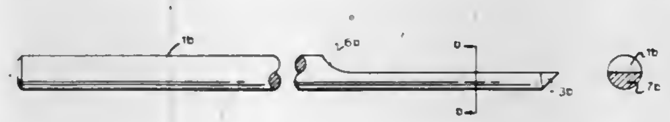

1. In a method for inserting a bone pin through tissue and bone, the improvement comprising:

drilling through said tissue and bone with a bone pin, said bone pin having an elongated cylindrical shaft with a cutting tip at one end of said shaft, said cutting tip including a semi-cylindrical portion having a flat surface substantially coinciding with the center plane of said bone pin, said semi-cylindrical portion having a proximal end integrally connected to the shaft and a distal end having an angled cutting edge and an angled non-cutting edge converging to form a point,

maintaining the maximum average bone temperature during drilling at a radial distance of 1 mm from the drill site at about 51° C. or less, and maintaining the average duration of temperature elevation above 55° C. at a radial distance of 1 mm from the drill site during drilling at about one second or less; and

retaining the bone pin in the tissue and bone for a period of time for use with a suitable external fixation device.

4,373,519

COMPOSITE WOUND DRESSING

Louis A. Errede, North Oaks; James D. Stoesz, St. Paul, both of Minn., and George D. Winter, deceased, late of St. Paul, Minn. (by Jenny Upton, personal representative), assignors to Minnesota Mining and Manufacturing Company, St. Paul, Minn.

Filed Jun. 26, 1981, Ser. No. 277,990

Int. Cl.^{3} A61L *15/00;* **A61F** *13/00*

U.S. Cl. 128—156 **18 Claims**

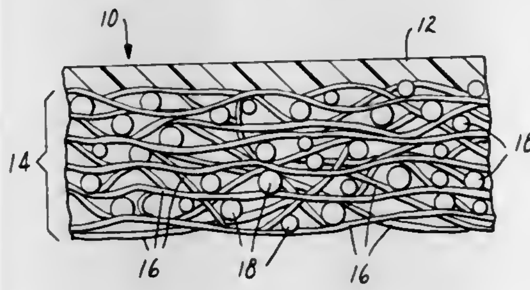

1. A composite wound-dressing which is a sheet material, comprising:

(a) a polytetrafluoroethylene fibril matrix,

(b) 0.5 to 10 parts of hydrophilic absorptive particles per part of PTFE by weight enmeshed in said matrix, the absorptive particles having absorptive capacity greater than 0.5 grams of water per gram of dry particles, and

(c) a partially occlusive film coated on one surface of said matrix,

wherein substantially all of said hydrophilic absorptive particles are unavailable for sloughing.

4,373,520

RESPIRATOR SPEECH UNIT/OUTLET VALVE

Roland H. Arbique, Hull, Canada, assignor to Her Majesty the Queen in Right of Canada, as represented by the Minister of National Defence, Canada

Filed Aug. 14, 1980, Ser. No. 178,186

Claims priority, application Canada, Sep. 28, 1979, 336600

Int. Cl.^{3} A62B *7/00*

U.S. Cl. 128—201.19 **8 Claims**

1. A speech transmitting unit for use with a respirator, said respirator including an air inlet and an air outlet, said unit comprising

a cylindrical open-ended frame, one end of which is to be connected to said air outlet;

a rigid valve seat disc transversely disposed in said frame adjacent the other end of the frame, providing an air-tight seal between said frame and said valve seat disc;

first and second openings in said valve seat disc, said first opening being in the form of a circular aperture;

a one-way valve associated with said circular aperture to permit the exit of exhaled air from said respirator and to prevent the entry of outside air into said respirator when the wearer thereof is not exhaling;

a speech transmitter disc including a diaphragm, transversely disposed in said frame adjacent said one end of the frame and spaced from said valve seat disc, said transmitter disc being of a diameter somewhat smaller than the diameter of said frame, to define together with said valve seat disc and said frame, a peripheral exhaled air-flow path between said one end of the frame and said circular aperture; an opening in said speech transmitter disc; and

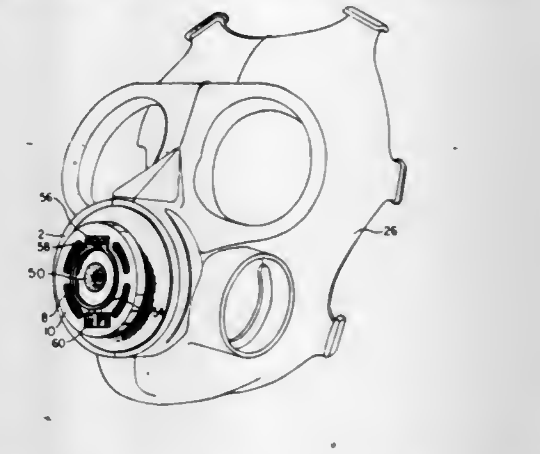

conduit means for connecting said opening in said speech transmitter disc with said second opening in said valve seat disc to provide an outlet path for speech transmission, wherein said valve is in the form of a flexible disc secured at its center to an outer end of the frame, the valve in operative position being concentric with and covering the aperture to cooperate therewith, at least a portion of the periphery of the valve overlapping the edges of the aperture, the valve, when in operation, flexing to permit passage of exhaled air from the respirator through said aperture and then sealing the aperture to prevent entry through the aperture into the respirator of outside air.

4,373,521

HEATED BREATHING BAG SHEATH

J. Frank Wattenbarger, Panama City, Fla., assignor to The United States of America as represented by the Secretary of the Navy, Washington, D.C.

Filed Aug. 24, 1981, Ser. No. 295,398

Int. Cl.^{3} A62B *7/00*

U.S. Cl. 128—202.13 **10 Claims**

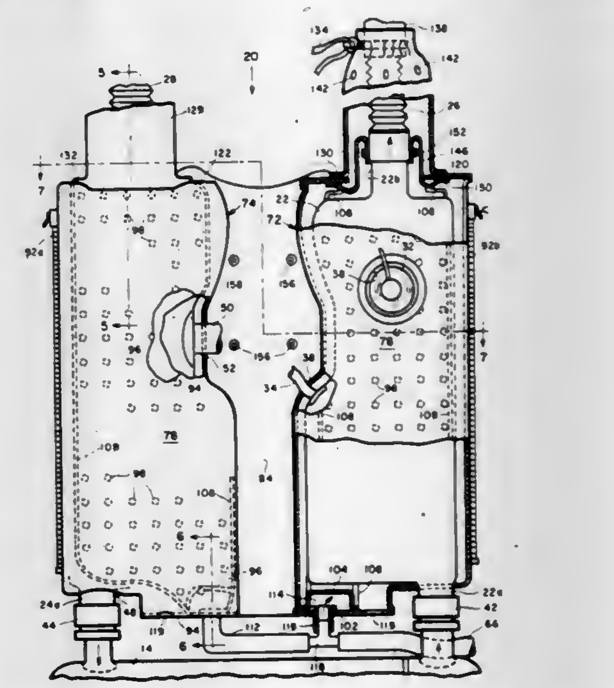

1. A heated sheath devide for use in association with an underwater breathing apparatus of the type including a breathing bag, a breathing hose extending from said bag for connec-

tion of its distal end to a utilization means, and a source of heated water, said sheath device comprising:
fabric wall means defining at least a first breathing bag enclosure;
said wall means comprising at least one wall including inner and outer layers of substantially water impervious fabric, said layers being connected together at a plurality of locations so as to define water flow passages in said one wall;
means for connecting said flow passages to said source of heated water;
at least a first water conducting, elongate sleeve means formed of substantially water impervious fabric having a proximal end connected to said outer layer of said wall means, said sleeve means being adapted to receive said hose and to have its distal end substantially closed about the distal end portion of said hose; and
at least a first dam means extending from said inner layer and adapted to be fixed around the proximal end of said hose so as to direct water flowing from between said layers into the space between said hose and said sleeve means.

4,373,522
EMERGENCY FRESH AIR SUPPLY DEVICE
Allen S. Zien, Bayside, Wis., assignor to Zien Mechanical Contractors, Milwaukee, Wis.
Filed Jul. 31, 1981, Ser. No. 288,909
Int. Cl.³ A62B *7/00*
U.S. Cl. 128—206.12 11 Claims

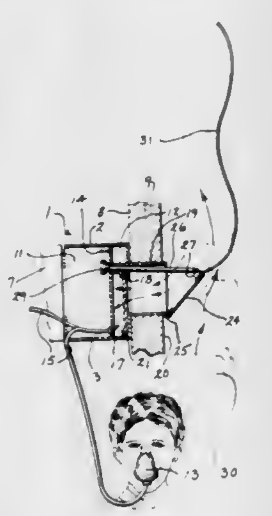

1. An emergency fresh air supply device for people in a building room having an outside wall, comprising in combination:
(a) housing means defining a storage chamber and an air chamber and adapted to be fixedly mounted on the inner side of said outside wall, and with said housing means being openable from the room side,
(b) a fresh air conduit connected to said air chamber of said housing means and adapted to extend outwardly therefrom through the said building wall to form a fresh air inlet mouth on the outer side of said wall,
(c) at least one face mask removably disposed within said storage chamber of said housing means and with said mask being connected to said conduit,
(d) and a closure cap disposed at said inlet mouth of said conduit for normally closing said conduit to outside air.

4,373,523
HELMET MOUNTED CONSTANT TENSION TRACTION DEVICE
Edward J. Treutelaar, 8439 W. Sunnyside Ave., Chicago, Ill. 60656
Filed Oct. 23, 1980, Ser. No. 182,620
Int. Cl.³ A61M *15/08*
U.S. Cl. 128—207.18 8 Claims

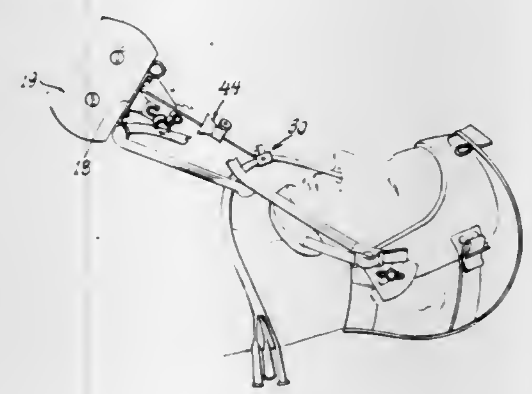

1. A head-worn esophageal varices tube support having a constant tension traction device carried thereby and providing a connecting cable for attachment to the tube comprising:
(a) a helmet-like structure to be worn on the head of a patient so as to allow full mobility for use,
(b) a bracket extending forwardly from said helmet-like structure for mounting a constant tension traction device in a line substantially the continuation of the patient's nostrils,
(c) a constant tension traction device mounted upon said bracket and providing a retractable cable,
(d) means mounted on said cable of said constant tension traction device and releasably attached to the esophageal varices tube for mounting the same under constant tension after the same has been inserted in the nostrils of the patient, and
(e) means adjustably fixed along the length of said cable to limit up-riding of the tube out of the patient's nostrils by said constant tension traction device.

4,373,524
LIQUID FLOW CONTROL DEVICES PARTICULARLY USEFUL IN INFUSION ADMINISTRATION SETS
Saul Leibinsohn, 11 Oley Hagardom St., Rishon Le Zion, Israel
Filed May 9, 1980, Ser. No. 148,487
Claims priority, application Israel, May 14, 1979, 57279
Int. Cl.³ A61M *5/00*
U.S. Cl. 128—214 R 26 Claims

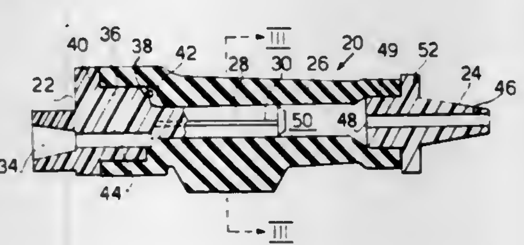

1. A liquid flow control device particularly useful for attachment to an infusion administration set including an infusion liquid container connected by a line to an infusion needle, comprising: a conical socket member at one end of said device for connecting same to the infusion container side of the line; a conical pin member at the opposite end of said device for connecting same to the infusion needle side of the line; and fixed-rate metering means between and communicating with said socket and pin members for metering the liquid flow therebetween according to a preselected fixed rate; said fixed-rate liquid metering means including a stem integrally formed with one of said conical members, a sleeve overlying said stem, and a metering groove formed between the outer face of the stem and the inner face of the overlying sleeve which groove meters the liquid flow according to the preselected fixed rate.

4,373,525
METHOD AND APPARATUS FOR DETECTING OCCLUSION IN FLUID-INFUSION TUBE OF PERISTALTIC TYPE FLUID-INFUSION PUMP
Susumu Kobayashi, Fujinomiya, Japan, assignor to Terumo Corporation, Tokyo, Japan
Filed Feb. 6, 1981, Ser. No. 231,955
Claims priority, application Japan, Feb. 12, 1980, 55/15644
Int. Cl.³ A61M *5/00;* F04B *49/00*
U.S. Cl. 128—214 E 15 Claims

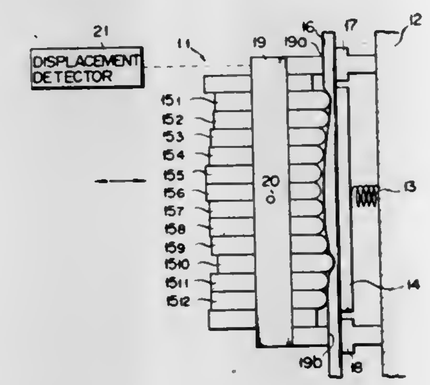

2. An apparatus for detecting occlusion in a fluid-infusion tube of a peristaltic fluid-infusion pump comprising:
a pair of stationary pieces respectively mounted adjacent said fluid-infusion tube at a fluid inlet portion and a fluid outlet portion of said fluid-infusion pump;
a common movable member having a pair of pressing parts disposed respectively in opposition to said stationary pieces, said pressing parts being adapted to press the parts of said fluid-infusion tube which correspond to said fluid inlet and outlet portion of said pump, with a predetermined substantially equal pressure between said pressing parts and said respective associated stationary pieces during normal fluid infusing, said common movable member being adapted to be displaced corresponding to a change in a first distance between opposite wall portions of said fluid-infusion tube at said inlet portion thereof, and a change in a second distance at said outlet portion thereof, the sum of said first and second distances always being constant, said first and second distances being changed by a change in the internal pressure of said fluid-infusion tube caused by occlusion in said fluid-infusion tube; and
means coupled to said common movable member for detecting said occlusion by detecting said displacement of said common movable member.

4,373,526
DEVICE FOR INJECTION SYRINGE
Lothar Kling, Bierstädter Höhe 24, Wiesbaden, Fed. Rep. of Germany
PCT No. PCT/DE80/00099, § 371 Date Mar. 19, 1981, § 102(e) Date Mar. 19, 1981, PCT Pub. No. WO81/00210, PCT Pub. Date Feb. 5, 1981
PCT Filed Jul. 8, 1980, Ser. No. 253,925
Claims priority, application Fed. Rep. of Germany, Jun. 20, 1979, 2929425
Int. Cl.³ A61M *5/00*
U.S. Cl. 128—215 14 Claims

1. Device for injection syringes having a hollow cylindrical body and an exposed injection needle extending below the cylindrical body and connected for flow of liquid from the body through the needle for intramuscular and subcutaneous injections in human or veterinary medicine, which comprises an essentially tubular sleeve of substantially uniform inner diameter, whose inner diameter is slightly larger than the outer diameter of the hollow cylindrical body of an associated injection syringe to permit sliding the sleeve onto the cylindrical body, and which is provided in the interior with at least one clamping- or holding element disposed at an intermediate point to provide an upper portion of the sleeve encircling the cylindrical body and which holding element releases, when a certain pressure is reached, the forward motion of the syringe

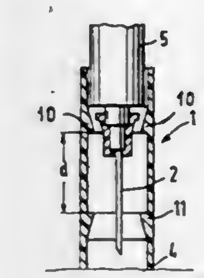

body with the needle which is disposed in the sleeve, whereby the length of the sleeve and the position of the clamping element in it are so dimensioned that the needle remains completely in the sleeve before the pressure is applied, and that, after the application of the pressure, the desired depth of injection can be reached outside of the sleeve by a stop element in the sleeve which stops the syringe body which moves toward the end of said sleeve when the desired pressure is reached.

4,373,527
IMPLANTABLE, PROGRAMMABLE MEDICATION INFUSION SYSTEM
Robert E. Fischell, Silver Spring, Md., assignor to The Johns Hopkins University, Baltimore, Md.
Filed Apr. 27, 1979, Ser. No. 34,155
Int. Cl.³ A61M *7/00*
U.S. Cl. 128—260 642 Claims

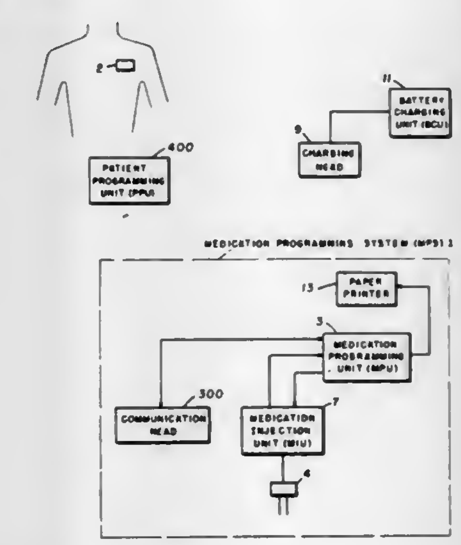

1. A programmable infusion system for providing medication to a living body of a patient comprising:
an infusion apparatus for implantation in said living body, said apparatus including
a medication reservoir for storing selected medication,
means for infusing said selected medication stored in said medication reservoir into said living body, said infusion means having at least one remotely commandable operational characteristic,
command receiver means coupled to said infusion means for receiving command signals, and
means for telemetering operational information pertaining to said infusion apparatus out of said living body;
command source means external to said living body for transmitting said command signals to be received by said command receiver means; and

means for receiving said telemetered operational information external to said living body.

4,373,528

SUCTION BOTTLE FOR SUCKING OUT SECRETIONS FROM WOUND CAVITIES

Anton Harle, Munster-Roxel, Fed. Rep. of Germany

Filed Mar. 18, 1981, Ser. No. 245,011

Claims priority, application Fed. Rep. of Germany, Mar. 22, 1980, 3011163

Int. Cl.³ A61M *1/00*

U.S. Cl. 128—276 4 Claims

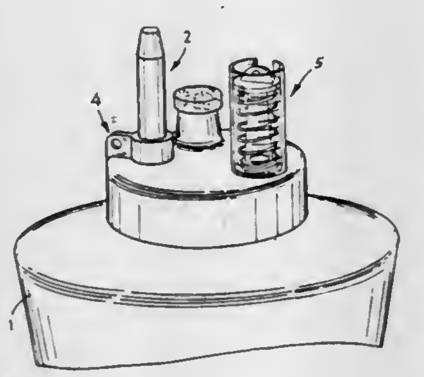

1. Suction bottle for sucking out secretions from wound cavities with an arrangement for checking the vacuum sealing off a pressure opening in the suction bottle, and with a connecting stub for a suction line, the improvement comprising a return spring (9) for the vacuum indicator arrangement (5), produced from a springy-elastic material, that is supported on the outside of a sealing tube (7) sealing the pressure opening (6) between the top end of the suction bottle (1) and an abutment (8) fixed to the sealing tube which is structured as an indicator arrangement and (7) which is fixed on the one end, in sealing fashion, to the suction bottle (1) and closed off on the other end, and a scale bearer for the vacuum indicator arrangement including stop notches at its top, said bearer cooperating with the abutment.

4,373,529

TAMPON WITH WOUND PLEDGET IN THE SHAPE OF A BELL

Amnuey Lilaonitkul, and Richard R. Tews, both of Appleton, Wis., assignors to Kimberly-Clark Corporation, Neenah, Wis.

Filed May 11, 1981, Ser. No. 262,327

Int. Cl.³ A61F *13/20;* **D01G** *25/00*

U.S. Cl. 128—285 4 Claims

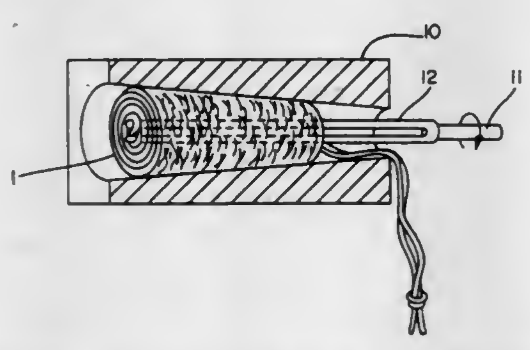

4. A tampon comprising a rolled pledget in the form of a bell shape with raised and depressed areas along the surface, said tampon having a withdrawal string positioned at the head of the bell.

4,373,530

SURGICAL STITCHING INSTRUMENT

Vahe Kilejian, Fresno, Calif., assignor to Lisa Ann Kilejian, Central Point, Oreg.

Continuation-in-part of Ser. No. 137,391, Apr. 4, 1980, abandoned. This application Jun. 29, 1981, Ser. No. 278,980

Int. Cl.³ A61B *17/04*

U.S. Cl. 128—334 R 9 Claims

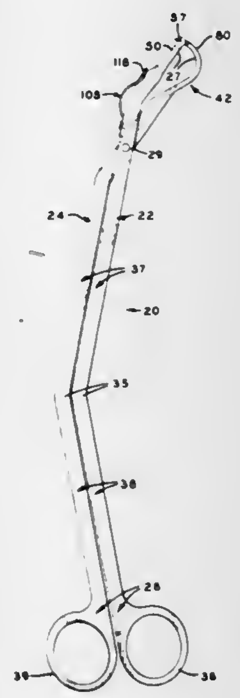

1. A surgical stitching instrument comprising:

A. a suture holder having a needle receiving slot and aligned notches on opposite sides of the slot adapted to receive a suture therein disposed transversely of the slot, the notches being disposed in a common plane and having an outer open end and a closed inner end;

B. a needle having a sharpened point, an inner edge, an outer edge divergent from the inner edge away from the point, and a hook in the outer edge spaced from the point; and

C. means mounting the holder and needle for relative movement between a retracted position spaced to receive a tissue to be stitched therebetween and a contracted position with the point of the needle in the slot of the holder, the needle being adapted to pierce the tissue disposed therebetween as the needle moves from its retracted position toward the holder, the point being adapted to slide under such a suture in the notches of the holder in movement into the slot, the inner edge of the needle being sharpened to cut the suture in the notches of the holder during such movement of the needle into the slot, the outer edge having a camming surface adapted to cam the suture outwardly of the notches in further movement of the point into the slot, the hook being adapted to snag the suture as it is cammed out of the notches and to drag the suture through the pierced tissue as the holder and needle return to their retracted positions, the outer ends of the notches being disposed in advance of the inner ends thereof in the direction of movement of the needle from the contracted position to the retracted position.

4,373,531

APPARATUS FOR PHYSIOLOGICAL STIMULATION AND DETECTION OF EVOKED RESPONSE

Frederik H. M. Wittkampf; Kornelis A. Mensink, both of Brummen, and Hendrik L. Brouwer, Dieren, all of Netherlands, assignors to Vitafin N.V., Curacao, Netherlands Antilles

Continuation-in-part of Ser. No. 30,457, Apr. 16, 1979, Pat. No. 4,305,396. This application Feb. 5, 1981, Ser. No. 231,882

Int. Cl.³ A61N *1/36*

U.S. Cl. 128—419 PG 17 Claims

1. A pacemaker of the type for delivering pacing stimulus signals to a patient, having an output to which generated stimulus signals are connected, a timing generator for timing the generation of pacing stimulus signals, output means for generating said pacing stimulus signals and delivering same to said output, sensing means for sensing heartbeat signals from said patient, and logic means connected to said sensing means and said timing generator for controlling generation of said pacing stimulus signals, wherein said output means is characterized by

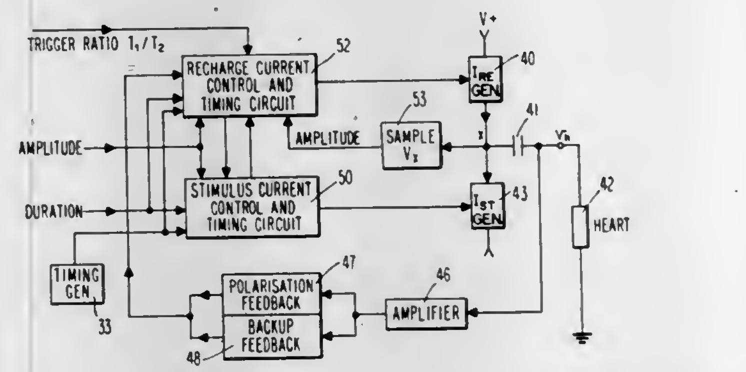

duration means for generating output signals having three separate durations, said output means having first means for generating a first recharge pulse of a positive polarity and a first duration, second means for generating a stimulus pulse of a negative polarity and a second duration following said first duration, and a third means for generating a second recharge pulse of a positive polarity and a third duration following said second duration, said three pulses together comprising one of said stimulus signals.

4,373,532

ULTRASONIC MARKER FOR PHYSIOLOGIC DIAGNOSIS AND METHOD OF USING SAME

Bruce C. Hill, and Roger A. Stern, both of Palo Alto, Calif., assignors to Palo Alto Medical Research Foundation, Palo Alto, Calif.

Filed Jul. 7, 1980, Ser. No. 166,556

Int. Cl.³ A61B *10/00*

U.S. Cl. 128—660 6 Claims

1. A marker for ultrasonic diagnosis comprising a body which provides, upon being subjected to a beam of ultrasonic energy, a reflected, transmitted or scattered acoustic signal distinct from the signal produced by surrounding tissue and means for chronically securing said marker to animal tissue for implantation during surgery, said body comprising an array of balls tangent to a plurality of adjacent balls and attached at the points of tangency, said balls being metallic and fused to each other.

4,373,533

ULTRASONIC DIAGNOSING APPARATUS

Kazuhiro Iinuma, Yaita, Japan, assignor to Tokyo Shibaura Denki Kabushiki Kaisha, Japan

Filed Feb. 24, 1981, Ser. No. 237,655

Claims priority, application Japan, Feb. 27, 1980, 55-22670

Int. Cl.³ A61B *10/00*

U.S. Cl. 128—663 6 Claims

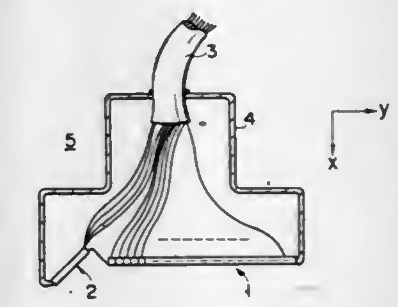

1. An ultrasonic diagnosing apparatus comprising:

a first transducer array having a plurality of ultrasonic transducers arranged in a given direction for transmitting an ultrasonic beam into a tissue of a human body and for receiving the ultrasonic echo reflected from the tissue;

a second transducer array having a plurality of ultrasonic transducers, for transmitting an ultrasonic beam into the tissue and receiving the ultrasonic echo reflected from the tissue, arrayed in a direction orthogonal to the direction of an array of the transducers in said first transducer array and arranged at an acute angle with respect to said first transducer array in a direction along which the ultrasonic beam of said first transducer array is transmitted and the ultrasonic echo is received;

a first signal processing circuit for processing the ultrasonic echo received by said first transducer array to produce an output signal corresponding to tomogram information of the tissue;

a second signal processing circuit for processing the ultrasonic echo received by said second transducer array to produce an output signal corresponding to a velocity of a blood flow in the tissue;

first display means for displaying a tomogram based on the output signal of said first signal processing circuit; and

second display means for displaying blood flow information based on the output signal of said second signal processing circuit.

4,373,534

METHOD AND APPARATUS FOR CALIBRATING RESPIRATION MONITORING SYSTEM

Herman Watson, Miami, Fla., assignor to Respitrace Corporation, Ardsley, N.Y.

Filed Apr. 14, 1981, Ser. No. 254,133

Int. Cl.³ A61B *5/10*

U.S. Cl. 128—725 2 Claims

1. In a non-invasive system for measuring respiration volume of the type including: means for providing a signal responsive to a rib cage dimension indicative of rib cage contribution to respiration volume; means for providing a signal responsive to an abdominal dimension indicative of abdominal contribution to respiration volume; means for multiplying said rib cage and abdominal signals by predetermined weighting factors reflecting the relative contributions of said rib cage and abdomen to respiration volume; and means for summing said weighted signals for providing a signal proportional to respiration volume; the improvement comprising means for determining said weighting factors comprising:

alternate means for measuring respiration volume and providing a signal indicative thereof;

means for simultaneously recording said unweighted rib cage and abdominal signals and said signal from said alter-

nate measuring means for a first plurality of breaths based on a first relative contribution between said rib cage and abdomen and for a second plurality of breaths based on a second relative contribution between said rib cage and abdomen;

processing means for (1) dividing said rib cage signal by said signal from said alternate measuring means for each breath

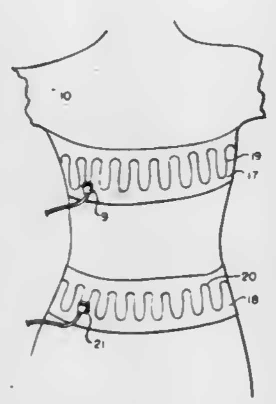

for definig a first coordinate for each breath, (2) dividing said abdominal signal by said signal from said alternate measuring means for each breath for defining a second coordinate for each breath, and (3) determining the x and y intercepts of a line approximation extending through the plurality of points defined by said first and second coordinates, the reciprocals of said intercepts substantially equaling said weighting factors.

4,373,535
VENTING, SELF-STOPPING, ASPIRATING SYRINGE
Michael D. Martell, 5297 Sandoval Ave., Riverside, Calif. 92509
Filed Aug. 17, 1981, Ser. No. 293,662
Int. Cl.³ A61B *5/00*
U.S. Cl. 128—765 **12 Claims**

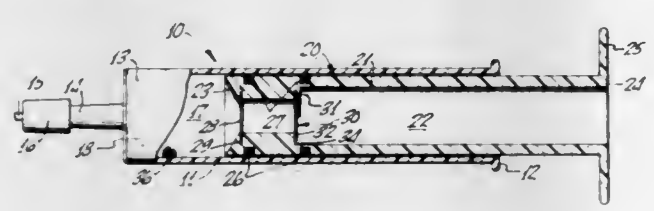

1. A syringe assembly comprising:
a tubular body open at one end and being adapted to receive a hypodermic needle at the other end thereof;
a plunger, one end of which is adapted for insertion into said tubular body through said open end, said plunger having a longitudinal passageway for air flow therethrough;
means for forming a fluid-tight seal between the outside surface of said plunger and the inside surface of said tubular body;
an air permeable filter membrane extending across said passageway adjacent said one end of said plunger; and
valve means extending across said passageway between said membrane and said open end of said tubular body for selectively permitting the passage of air through said passageway.

4,373,536
MOBILE CORN HARVESTER
Jose T. da Silva, Ribeirao Preto, Brazil, assignor to Cia Penha de Maquinas Agricolas-Copemag, Brazil
Filed Jun. 1, 1981, Ser. No. 269,421
Int. Cl.³ A01F *12/18*
U.S. Cl. 130—9 R **6 Claims**

1. A mobile corn harvester comprising a chassis, a casing mounted on said chassis and sloping upwardly toward the rear, a rotor extending longitudinally of said casing and rotatable therein, reaping means at the forward end of said casing for cutting corn stalks with ears thereon and delivering them into said casing, a forward portion of said rotor comprising a cylindrical shaft with a helical vane thereon for separating the ears from the stalks and transporting the ears rearwardly to a thrashing means, said casing having an elongate lower opening through which said stalks are discharged, said thrashing means comprising a cylindrical screen in a rearward portion of said casing and coaxial with said rotor, and a rearward portion of

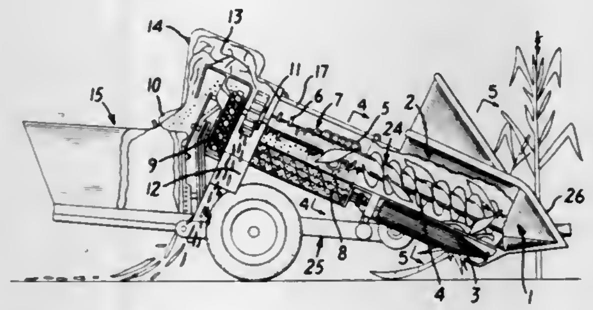

said rotor comprising a cylindrical shaft and thrashing loops and pins thereon, a lower portion of said casing below said screen forming a trough into which fall kernels of grain passing through said screen, a screw conveyor in said trough for transporting said grain upwardly and rearwardly to a discharge point, and a radial fan at the rear of said rotor and coaxial therewith for drawing waste material rearwardly of said casing and discharging it through an opening in said casing.

4,373,537
GRAIN SEPARATING APPARATUS
James B. McNaught, St. Germain-en-Laye, France, assignor to Massey-Ferguson Services N.V., Curacao, Netherlands Antilles
PCT No. PCT/GB80/00222, § 371 Date Aug. 31, 1981, § 102(e) Date Aug. 31, 1981, PCT Pub. No. WO81/01939, PCT Pub. Date Jul. 23, 1981
PCT Filed Dec. 19, 1980, Ser. No. 297,693
Int. Cl.³ A01F *7/00, 12/00;* **B02C** *21/00*
U.S. Cl. 130—27 R **11 Claims**

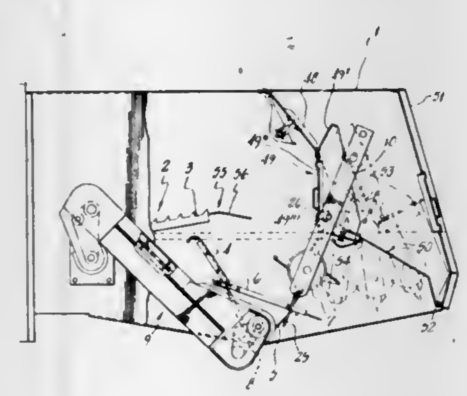

1. Apparatus for recovering grain from a mixture of grain and straw in a combine harvester comprising a conveyor capable of conveying a mixture of grain and straw in a generally horizontal direction to a discharge end; a chute arranged so that said mixture discharged from the conveyor falls onto the chute, the chute having a floor that is imperforate to the passage of grain through it and is downwardly inclined and projects beyond said discharge end in the feeding direction of the conveyor; a trough covered by a grille provided at or adjacent to the lower end of the chute and adapted so that when the mixture of grain and straw passes down the chute grain is collected by the trough and straw passes over it; and a rotor provided above and adjacent to the rear end of the chute and driven so as to assist the discharge of material from the apparatus, characterised in that the rotor **(7)** is so that it is adjustable towards and away from the chute **(4)** to vary the

space therebetween for different types of crop and crop conditions.

4,373,538
METHOD AND APPARATUS FOR FORMING A STREAM FROM SEVERAL TYPES OF TOBACCO
Wolfgang Steiniger, Börnsen, Fed. Rep. of Germany, assignor to Hauni-Werke Körber & Co. KG., Hamburg, Fed. Rep. of Germany
Filed Feb. 17, 1981, Ser. No. 234,454
Int. Cl.³ A24C *5/39, 5/14*
U.S. Cl. 131—109 R **23 Claims**

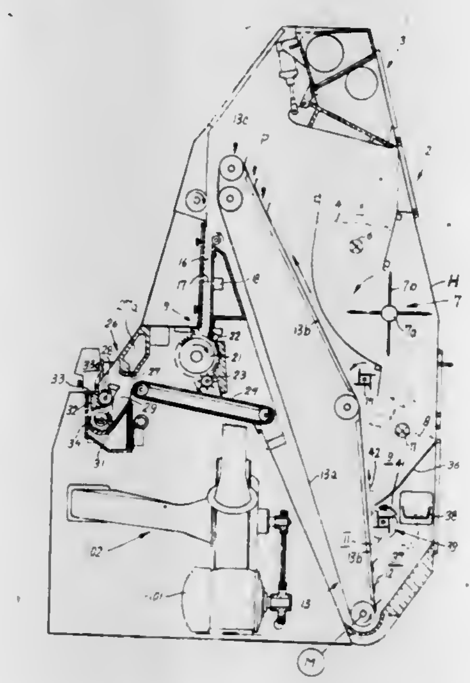

12. In an apparatus for forming a tobacco stream which contains predetermined percentages of plural types of tobacco, the combination of a first source containing tobacco of a first type; a second source containing tobacco of a second type; conveyor means having a plurality of entraining elements defining a series of pockets; means for moving said elements along a predetermined path wherein said elements advance first past said first source to remove therefrom batches of tobacco of the first type, whereby at least some batches contain a surplus of first tobacco, and thereupon past said second source to augment the batches by adding thereto tobacco of the second type; means for removing the surplus of tobacco of the first type from the respective batches intermediate said first and second sources so that each of the batches advancing past said second source at most contains a predetermined maximum quantity of tobacco of the first type; and means for converting the augmented batches into said stream.

4,373,539
TOBACCO SMOKE FILTER
Frank L. Innacelli, 25 Mori Pl., Red Bank, N.J. 07701
Filed Sep. 25, 1981, Ser. No. 305,719
Int. Cl.³ A24D *3/00, 3/02, 3/04*
U.S. Cl. 131—209 **15 Claims**

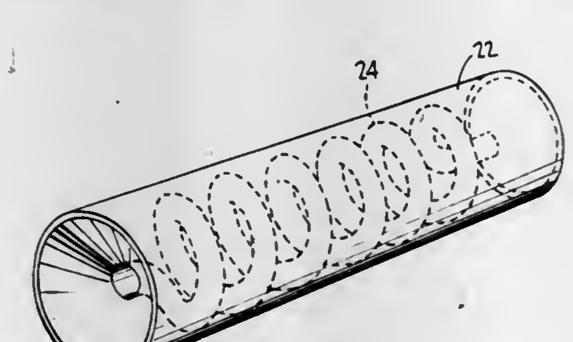

1. A smoking device comprising a means to hold a tobacco charge having a smoke outlet end, a conventional cellulose filter having an inlet end and a coiled helical tube filled with compressed carbon having an inlet and outlet end portion, said coiled tube placed between said filter and said means to hold the tobacco charge wherein said inlet portion of the coil is directly connected to the outlet of the means to hold the tobacco charge and the outlet portion of the coil is connected to said filter means whereby any tobacco smoke leaving the outlet end of the tobacco charge holding means passes directly into the inlet portion of said coil.

4,373,540
HAIR STRAIGHTENING PROCESS AND HAIR CURLING PROCESS AND COMPOSITIONS THEREFOR
Mario J. de la Guardia, Savannah, Ga., assignor to Carson Products Company, Savannah, Ga.
Division of Ser. No. 805,149, Jun. 9, 1977, Pat. No. 4,304,244. This application Dec. 8, 1980, Ser. No. 214,023
Int. Cl.² A45D *7/00*
U.S. Cl. 424—89 **2 Claims**

1. A composition for treating hair comprising an effective amount of guanidine hydroxide as the active ingredient, the pH of said composition being at least 11.8, and said composition being applied to said hair and being removed therefrom after a predetermined amount of time.

4,373,541
BRISTLE STRUCTURE FOR BRUSHES AND BRUSH ASSEMBLY
Gary J. Nishioka, 1268 Hemlock, NW., Salem, Oreg. 97304
Continuation-in-part of Ser. No. 64,366, Aug. 7, 1979, abandoned. This application Nov. 10, 1980, Ser. No. 205,150
Int. Cl.² A45D *44/18*
U.S. Cl. 132—84 R **2 Claims**

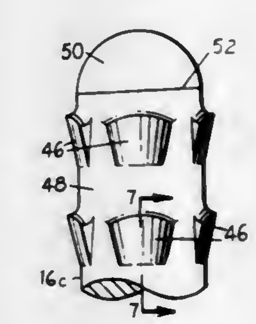

1. A brush structure comprising
(a) a head portion,
(b) and multiple bristles mounted on said head portion,
(c) said bristles each having a base end attached to said head portion,
(d) said bristles also each having a shaft portion projecting from said base end and terminating in a tip end,
(e) said bristles being arranged in multiple tufts on said head portion with each of said tufts comprising multiple bristles,
(f) at least some of said bristles having multiple longitudinally extending flat sides joined with each other by cutting edges,
(g) said flat sides and said cutting edges of said bristles extending in uninterrupted relation along the full length of said bristles from said base end to said tip end,
(h) said cutting edges being substantially equally spaced apart along the full length of said bristles,
(i) said bristles being sufficiently rigid to maintain themselves normally in free-standing relation on said head portion but being sufficiently flexible to bend during brushing motions whereby to allow abrasive functioning of the tip ends of the bristles as well as to allow abrasive functioning of said

cutting edges along the shaft portions of said bristles in said tufts.

4,373,542

FIRE SAFE DISC VALVE

Domer Scaramucci, 3245 S. Hattie, Oklahoma City, Okla. 73129
Division of Ser. No. 865,853, Dec. 30, 1977, Pat. No. 4,249,555. This application Oct. 20, 1980, Ser. No. 198,540
Int. Cl.³ F16K *1/20*

U.S. Cl. 137—72 **18 Claims**

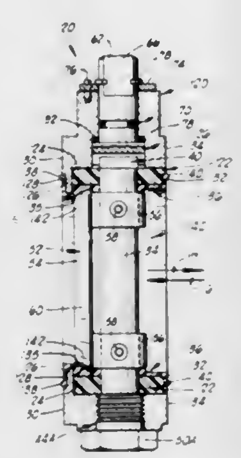

1. A fire safe disc valve, comprising:
a valve body having a flow passageway therethrough and having an annular flow sealing seat, the valve body having a stem operating aperture disposed in a wall thereof and communicating with the flow passageway, and the valve body having an annular stem sealing seat facing the flow passageway and disposed in the stem operating aperture;
an operating stem rotatably supported in the stem operating aperture and having an operating end and a stem engaging end, the operating stem having an annular stem sealing face facing the stem sealing seat;
a disc shaft having a first end portion disposed in the stem operating aperture and a disc supporting portion disposed in the flow passageway, the first end portion of the disc shaft engageable with the stem engaging end of the operating stem so that rotation of the operating stem effects rotation of the disc shaft;
packing means supported by the valve body for providing bearing support for the first end portion of the disc shaft, the operating stem having limited axial displacement toward the stem sealing seat under fluid pressure on the stem engaging end in the event the packing means is destroyed, the packing means characterized as comprising:
a sleeve bearing supported by the valve body in the flow passageway, the sleeve bearing having a pair of diametrally opposed bearing apertures, each of said bearing apertures supporting one end of the disc shaft;
a disc supported by the disc supporting portion of the disc shaft in the flow passageway of the valve body, the disc positionable by rotation of the disc shaft in a passage sealing position and in a passage opening position, the disc having an annular flow sealing face facing the annular flow sealing seat when the disc is in the passage sealing position; and
disc sealing means for sealing the flow passageway between the disc and the annular flow sealing seat when the disc is in the passage sealing position, the disc shaft having limited downstream displacement under the pressure of fluid in the flow passageway in the event the annular stem packer and the disc sealing means are destroyed so that the flow passageway is sealed by sealing together of the annular flow sealing face of the disc and the annular flow sealing seat of the valve body.

4,373,543

FIRE RESISTANT SEAT FOR FLOW CONTROL VALVE

Robert J. Brown, and Kenneth D. Shepherd, both of Cookeville, Tenn., assignors to The Duriron Company, Inc., Dayton, Ohio
Filed Jun. 12, 1981, Ser. No. 273,165
Int. Cl.³ F16K *1/226*

U.S. Cl. 137—74 **5 Claims**

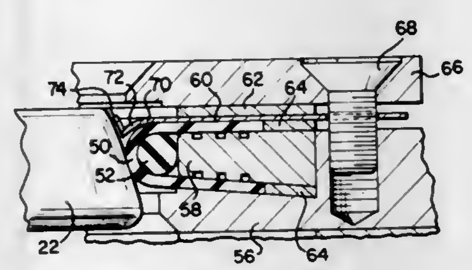

1. A flow control valve for providing a metal-to-metal seal upon the thermally induced failure of the primary sealing element, comprising in combination: a housing defining a fluid flow channel, a valve element disposed in said fluid flow channel adapted to be moved between an open and a closed position to control the flow of fluid therethrough, an annular resilient seat member circumscribing said fluid flow channel and cooperating with said valve element for sealing said fluid flow channel when said valve element is in a closed position, said annular resilient seat member including a primary sealing element and a resilient reinforcing member supporting said primary sealing element, at least one annular flexible metal seat member having a curved inner edge adapted to sealingly engage said valve disc and positioned adjacent to and biased toward said resilient seat member, and heat resistant gasket means for holding said flexible metal seat member in position so that upon melting or deterioration of said resilient seat member said curved inner edge of said flexible metal seat member springs into sealing engagement with said valve element when said valve element is in a closed position to provide a heat resistant metal-to-metal seal.

4,373,544

CHECK VALVE

Robert B. Goodman, West Hartford, and James T. Triba, Enfield, both of Conn., assignors to United Technologies Corporation, Hartford, Conn.
Continuation-in-part of Ser. No. 191,037, Sep. 25, 1980, abandoned. This application Oct. 13, 1981, Ser. No. 310,587
Int. Cl.³ F16K *15/06*

U.S. Cl. 137—220 **11 Claims**

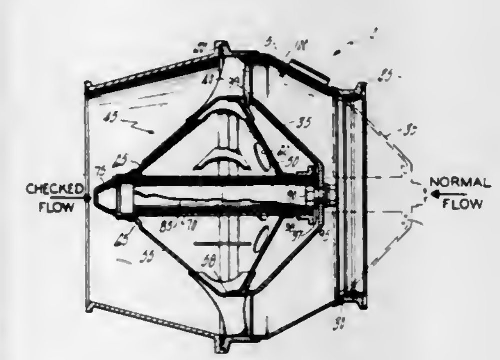

1. A fluid check valve comprising:
a housing, defining an outer portion of a fluid channel;
a seat disposed within said housing;
a valve element positionable within said housing by fluid flow therethrough, said valve element, by application thereto of reverse fluid flow, being held in engagement with said seat for closing said check valve and, by application of forward fluid flow thereto, being unseated for opening said check valve; and

an apertured guide body disposed within said housing and defining, with said valve element, under conditions of normal fluid flow, an inner wall of said fluid passage, said apertures accommodating reverse flow therethrough for application of said reverse flow to said valve element for seating said valve element and closing said check valve, said check valve being characterized by:
said guide body being mounted within the interior of said housing by a plurality of spaced struts, each of said struts being disposed between said housing and guide body and extending in directions defined by directional components both radially outward from and tangential to said guide body.

4,373,545

DOUBLE BLOCK AND VENT VALVE

Herman E. Knappe, Cedar Rapids, Iowa, assignor to Cherry-Burrell Corporation, Cedar Rapids, Iowa
Filed Jan. 26, 1981, Ser. No. 228,229
Int. Cl.³ F16K *11/20, 51/00*

U.S. Cl. 137—240 **3 Claims**

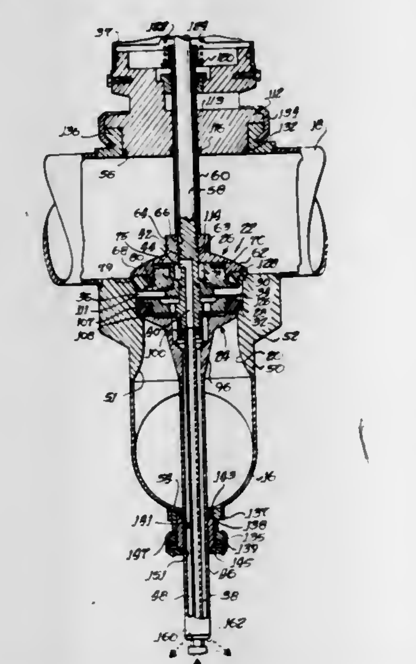

1. A valve for allowing the separate flow of liquids through two separate lines without intermixing when the valve is in the closed position and for permitting flow between the two lines when the valve is in the open position, which valve comprises
housing means having an internal wall forming an interior passageway therewithin which interconnects a first region designed for connection to a first piping system and a second region designed for connection with a second piping system,
a valve member disposed within said housing
a generally cylindrical rod member extending from an exterior location into an upper end of said housing upon which said valve member is mounted for reciprocating movement, said rod member being adapted for attachment to actuator means disposed exterior of said housing for reciprocating said valve member,
said valve member having a hollow extension stem portion coaxial with said rod member that extends exterior of said housing through the lower end thereof,
said valve member including first and second relatively movable parts, the first part being affixed to said rod member and said second part including a sleeve portion which is disposed in surrounding coaxial relation to said rod member for sliding relative to said rod member and extends through said housing, compression spring means connected to said sleeve portion at a location exterior of said housing for biasing said second valve member part toward said first valve member part so that said parts move relatively toward each other when said rod member reciprocates to open the valve,
said interior passageway wall being formed with first and second annular seats, the diameter of said first annular seat being less than the diameter of said second annular seat,
said first valve member part carrying first ring means for sealing against said first annular seat,
said second valve member part carrying second ring means for sealing against said second annular seat,
tube means located within said hollow stem and extending from a location exterior of said housing to a central passageway within a generally cylindrical spindle portion of said first valve member part, said central passageway having a lower entrance end and upper exit through the sidewall of said spindle portion,
said hollow stem and said tube means forming an annular passageway therebetween,
said first and second valve parts being spaced apart from each other when said valve is in the closed position to create an intermediate chamber therebetween, said second valve member part having passageways communicating said upper exit with said intermediate chamber when said valve is in said closed position, said passageways including constricted nozzle portions, said intermediate chamber extending to said internal wall at a location between said first and said second seats and also extending downward to said annular passageway,
whereby any liquid leaking past either of said ring means drains exterior of said housing through said annular passageway and whereby said intermediate chamber can be cleaned without disassembly by causing cleaning fluid to flow through said constricted nozzle passageway portions and into said intermediate chamber in forceful sprays against the surfaces of said internal wall and out of said housing through said annular passageway.

4,373,546

LONG LIFE VALVE

Rafael Krakovsky, 1022 University Blvd. East, Apt.#322, Silver Spring, Md. 20903
Filed Nov. 26, 1980, Ser. No. 210,786
Int. Cl.³ F16K *29/00*

U.S. Cl. 137—330 **2 Claims**

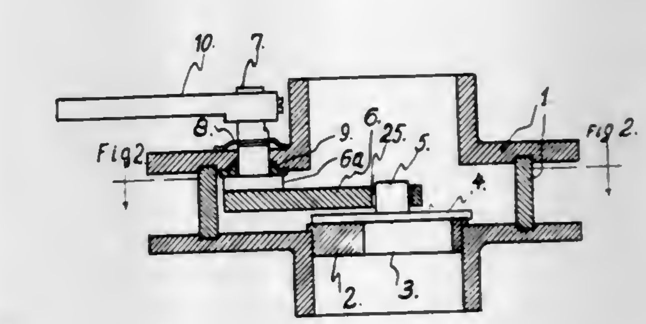

1. The method of controlling fluid flow in a valve for regulating a variable flow of fluid having valve members including a circular apertureless flat surface disc type closure member movable in sliding registration across a flat surface having therein flow aperture structure to variably restrict the flow path opening size in a manner to extend the operable life of the valve by reducing wear about the disc perimeter edge induced by sliding registration and by fluid flow erosion of the disc peripheral edges comprising the steps of:
mounting the circular apertureless flat surface disc closure member about its geometric center so that it may rotate as it is moved across the flow aperture in sliding registration to open and close a flow path,
providing said flow aperture structure in the valve of an aperture size substantially smaller than the disc for registration therewith,
establishing a flat valve seat surface to receive the flat disc surface in sliding motion thereacross for sealing in place substantially solely by fluid pressure on the disc,

orienting in the valve seat said flow aperture structure with a major portion thereof asymmetrically disposed to one side of the movement path of the center of said disc sufficient to generate a turning movement rotating the disc as it slides into registration by means of the asymmetrical position of the flow path on the rotary disc by reaction of fluid pressure and flow at the aperture while the disc is being moved into or out of registration with the valve seat, and

sliding the flat disc surface into and out of registration across the flat valve seat surface to at least partly close the aperture in a mode inducing the random rotational positioning of the disc edge as a function of the fluid pressure and flow to thereby distribute wear induced on the disc edge by fluid flow through the aperture about the entire disc periphery.

4,373,547
DOME FUNNEL

William A. Geis, Woodbridge, and Carl H. Frimodig, Jr., Middletown, both of N.J., assignors to Shell Oil Company, Houston, Tex.
Filed Dec. 29, 1980, Ser. No. 220,661
Int. Cl.³ F16L ***35/00;*** **B67D** ***5/00***
U.S. Cl. 137—377 **9 Claims**

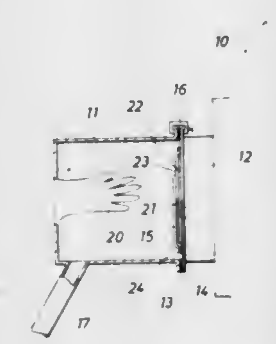

1. Apparatus for removing fluid through a dome hatch of a rolled-over tanker comprising, an open-ended container having a fluid outlet means, means for attaching the open end of the container to the dome hatch, and a flexible mitten extending inwardly of the container to the proximity of the open end.

4,373,548
GAS FLOW SAFETY CONTROL DEVICE

Martin S. Chou, No. 13, Section 2, Kuang Fu Rd., San Chung City, Taipei Hsien, Taiwan
Filed Jul. 8, 1981, Ser. No. 281,342
Int. Cl.³ F16K ***17/00***
U.S. Cl. 137—460 **2 Claims**

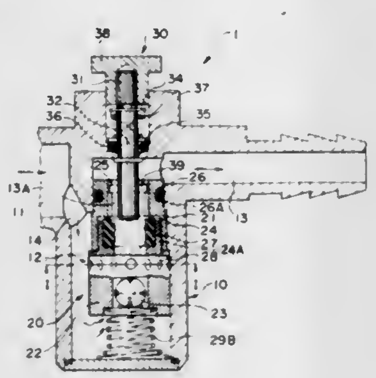

1. A gas flow safety control device, comprising:

a casing provided with an inlet port to be connected to a gas supply source, a gas compartment connected to said inlet port, an outlet port through which the gas is delivered to a gas burner, said gas compartment provided with a semicylindrical wall having a longitudinal axis;

a cylinder member rotatably coaxially inserted in said gas compartment in said casing, having an inner passage, an upper open end connecting said inner passage to said outlet port, a lower open end connecting said inner passage to said gas compartment, an outer cylindrical surface in contact with said semicylindrical wall of said gas compartment, a plurality of orifices formed in a row around approximately one half of the outer circumference so that when said cylinder member is rotated to dispose said orifices against said semicylindrical wall the orifices are closed, and when said cylinder member is rotated to dispose said orifices opposite to said semicylindrical wall the orifices are exposed to said gas compartment thus connecting said gas compartment with said inner passage;

a ball member capable of freely passing through the lower part of said inner passage of said cylinder member, said ball member being supported by a coil spring so as to be disposed in the lower part of said inner passage of said cylinder member blow said row of orifices;

a throat member fixedly disposed between said upper open end of said inner passage of said cylinder member and said row of orifices in said inner passage, having slightly tapered interior passage which may be closed by traping said ball member when said ball member is pushed upwards from below; and

an operating handle operatively connected to said cylinder member from above.

4,373,549
MASS FLOW/PRESSURE CONTROL SYSTEM

Roger A. Nalepa, Landenberg, Pa., and Michael A. Casale, Newark, Del., assignors to Hewlett-Packard Company, Palo Alto, Calif.
Filed Feb. 12, 1979, Ser. No. 11,333
Int. Cl.³ F16K ***31/02***
U.S. Cl. 137—487.5 **17 Claims**

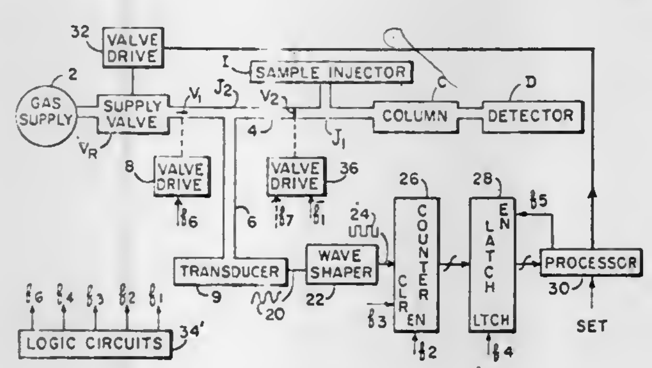

11. Apparatus for controlling the flow of a gas from a pressurized source so as to maintain a constant pressure on a load, comprising

a valve having an input to which gas under pressure may be coupled and an output,

means defining a volume V having an inlet port coupled to the output of said valve and an outlet port to which a load may be coupled,

pressure signal producing means including a transducer for producing, when activated, an electrical signal representing the pressure in said volume V,

means for placing said valve in an open position during a first portion of each of a plurality of successive cycles and for placing it in a closed position during the remainder of each cycle,

means for activating said pressure signal producing means during the end of said first portion of each cycle so as to produce a signal representing the pressure P_A of the gas in the volume V,

means for activating said pressure signal producing means during the end portion of each cycle so as to produce a signal representing the pressure P_B of the gas in the volume V, and

means responsive to one of the signals representing the pressures P_A or P_B for controlling the amount of gas that flows through said valve in each cycle so as to maintain said one pressure at a predetermined set value.

4,373,550
VALVE HAVING A BIAS-MOUNTED ELASTOMERIC SEALING ELEMENT, AND METHOD OF CONSTRUCTING THE SAME

William Yelich, Costa Mesa, Calif., assignor to Cla-Val Co., Newport Beach, Calif.
Filed Jul. 28, 1980, Ser. No. 172,563
Int. Cl.³ F16K ***15/00***
U.S. Cl. 137—516.29 **12 Claims**

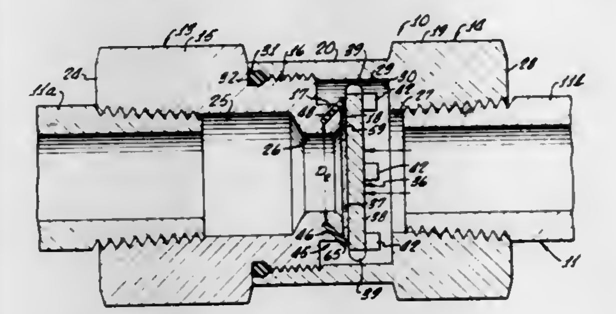

1. A valve comprising:

(a) a body having a forwardly facing seating surface and a frustoconical annular groove formed in said body;

(b) an elastomeric annular sealing washer, said washer having a radially inner portion retained in said groove, and having an outer circumferential edge disposed forwardly of said seating surface;

(c) a valve closure having a surface extending across said seat and radially outwardly thereof, said valve closure being mounted for movement between an open position displaced from said washer and a closed position in which the closure has a line contact with said washer edge and extends radially outwardly of said edge;

(d) said washer being flat in unstressed condition and the radially inner portion of said washer being held in a stretched frustoconical configuration by said groove.

4,373,551
DRIPLESS COUPLER

Aloysius C. Shindelar, Hudson, Iowa, assignor to Deere & Company, Moline, Ill.
Filed Jan. 12, 1981, Ser. No. 224,598
Int. Cl.³ F16L ***37/28***
U.S. Cl. 137—614.06 **19 Claims**

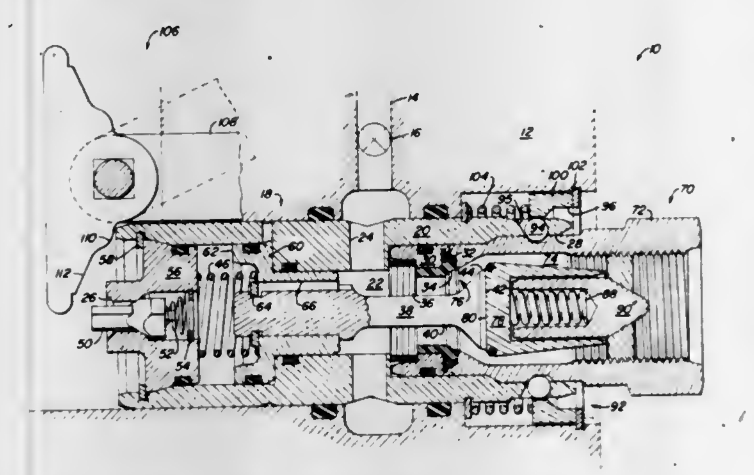

1. A dripless coupler comprising:

(a) a housing having a fluid passage formed therein;

(b) a female coupler movably retained in said housing, said female coupler including a receptacle enclosing a cavity having an inlet port communicating with said fluid passage formed in said housing, an open bore located at one end of said cavity and an outlet port axially aligned with said open bore, a movable seat positioned in said open bore portion of said receptacle, main valve means mateable with said movable seat for blocking fluid flow through said open bore, said main valve means having a flat end surface, and secondary valve means for controlling fluid flow through said outlet port;

(c) a male coupler insertable into said open bore portion of said female coupler, said male coupler including a receptacle enclosing a cavity having an inlet opening in which a movable check valve is positioned, said check valve having a flat end surface mateable with said flat end surface of said main valve means located in said male coupler;

(d) movable piston means for assisting in moving said main valve means against fluid pressure contained in said male coupler; and

(e) lever-actuatable cam means for moving both said receptacle of said female coupler and said secondary valve means, said lever-actuatable cam means being pivotally attached to said housing.

4,373,552
ELECTROMAGNETIC FLOW CONTROL VALVE ASSEMBLY

Shoji Ito, Nagoya, and Motonobu Akagi, Kariya, both of Japan, assignors to Aisin Seiki Kabushiki Kaisha, Kariya, Japan
Filed Nov. 3, 1980, Ser. No. 203,517
Claims priority, application Japan, Nov. 8, 1979, 54-145673
Int. Cl.³ F16K ***11/04, 31/08***
U.S. Cl. 137—625.48 **5 Claims**

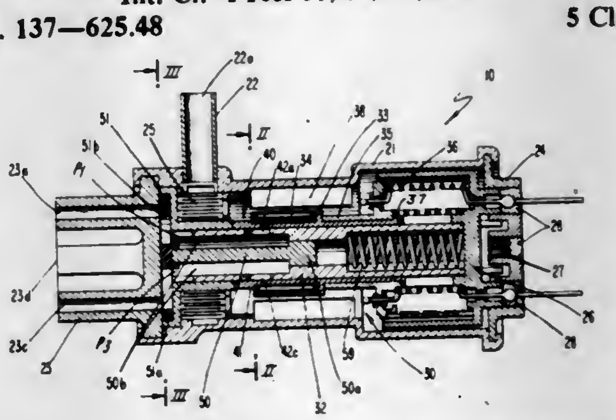

1. An electromagnetic flow control valve assembly comprising:

a valve body including an inlet port and a plurality of outlet ports; and

valve means in said body for controlling fluid communication between said inlet port and said outlet ports;

said valve means including a hollow iron core having a peripheral wall, a plurality of individual passages, each of said passages being in fluid communication with a corresponding one of said outlet ports;

a plurality of individual apertures in said peripheral wall, one of said apertures corresponding to each of said passages for forming a fluid path between each of said outlet ports and said inlet port; and

bobbin means including a bobbin slidably mounted on the core for simultaneously and linearly controlling fluid flow between said inlet port and all of said plurality of outlet ports through said plurality of apertures in response to electric current applied to said bobbin means, said bobbin for moving axially between one position wherein said fluid paths are all closed by said bobbin, and a second position wherein said apertures are uncovered for opening all of said fluid paths.

4,373,553
BROAD BAND FLUERIC AMPLIFIER

Tadeusz M. Drzewiecki, Silver Spring, Md., assignor to The United States of America as represented by the Secretary of the Army, Washington, D.C.

Filed Jan. 14, 1980, Ser. No. 111,738
Int. Cl.³ F15C *1/08*

U.S. Cl. 137—840 13 Claims

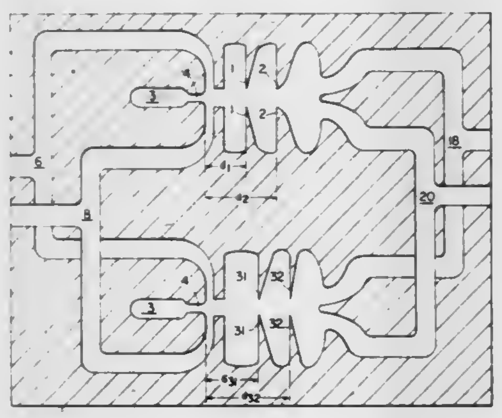

1. A broad band proportional flueric amplifier comprising:
input means for directing a jet of fluid outwardly from a nozzle;
output means comprising two output channels;
control means for deflecting the jet toward an output channel and for causing the jet to oscillate between the output channels; and
at least one set of protrusions situated on opposite sides of the jet path, each protrusion being positioned at a distance from the edge of the undeflected jet which does not exceed one half the width of said jet such that the deflected jet will just touch the protrusion when the output of the amplifier is fully saturated.

4,373,554
SELF-SEALING ARTICLE AND PROCESS

Paul M. Cook, Atherton, Calif., assignor to Raychem Corporation, Menlo Park, Calif.

Continuation-in-part of Ser. No. 228,300, Oct. 4, 1962, abandoned, and a continuation-in-part of Ser. No. 58,401, Jul. 27, 1970, abandoned. This application Apr. 18, 1974, Ser. No. 462,120
Int. Cl.³ F16L *11/12*

U.S. Cl. 138—137 13 Claims

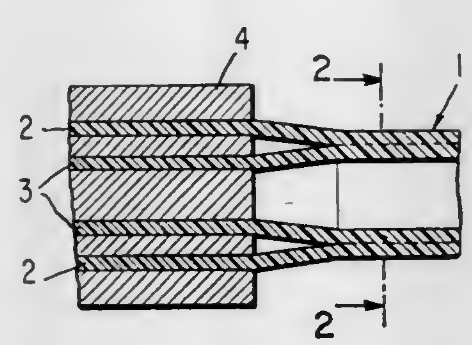

1. A monolithic tubular article comprising an outer and an inner concentric tubular wall portion, said concentric wall portions being intimately bonded with each other, said intimate bond having been formed by fusing said wall portions together or by forming a chemical bond between said wall portions, one of said tubular portions comprising a heat-recoverable polymeric material being infusible at the temperature of heat-recoverability, the other said portion comprising a polymeric material fusible at the temperature of heat-recoverability.

4,373,555
CUT-OUT FUSE TUBE

Morris Mattuck, La Chute, and Rheal Comte, Ste. Marthe-sur-le-Lac, both of Canada, assignors to Canadian General Electric Company Limited, Toronto, Canada

Filed Dec. 2, 1981, Ser. No. 326,548
Int. Cl.³ D03D *35/00;* H01H *85/02*

U.S. Cl. 138—140 20 Claims

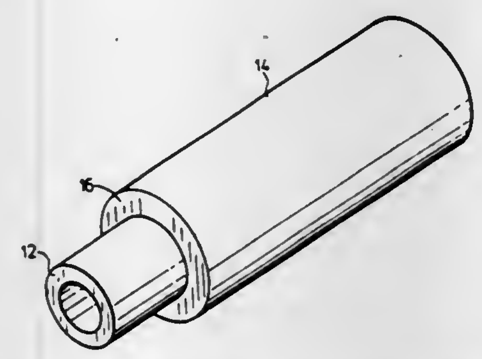

1. An arc-quenching composition comprising heat-treated polyester fibre material supported in a cycloaliphatic epoxy resin matrix.

6. A multiple layered laminate having an arc-quenching surface layer comprising a heat-treated polyester fibre material supported in a cycloaliphatic epoxy resin matrix.

9. A fuse tube comprising the composition of claim 1.

13. A fuse tube having a multiple layered laminate construction including:
an inner arc-quenching surface layer comprised of a wound filamentous heat-treated fibre material supported in a cycloaliphatic epoxy resin matrix; and, also including at least one other outer layer of filament wound glass fibre reinforced epoxy resin, said other layer being bonded to said surface layer.

4,373,556
CUT-OUT FUSE TUBE

Daniel D. Bergh, Lenox, Mass., assignor to Canadian General Electric Company Limited, Toronto, Canada

Filed Dec. 2, 1981, Ser. No. 326,549
Int. Cl.³ D03D *35/00;* H01H *85/02*

U.S. Cl. 138—140 13 Claims

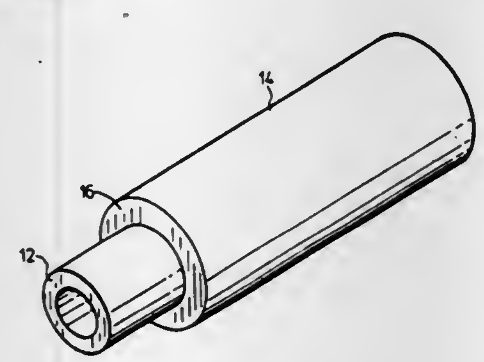

1. An arc-quenching composition comprising polyester fibre material supported in a cycloaliphatic epoxy resin matrix.

6. A multiple layered laminate having an arc-quenching surface layer comprising a polyester fibre material supported in a cycloaliphatic epoxy resin matrix.

8. A fuse tube comprising the composition of claim 1.

4,373,557
APPARATUS FOR PICKING THE SHUTTLES OF A LOOM

Robert Gründler, Arbon; Josef Fuchs, Steinach, both of Switzerland, and Herbert Jenni, Götzis, Austria, assignors to Aktiengesellschaft Adolph Saurer, Arbon, Switzerland

Filed Apr. 6, 1981, Ser. No. 250,941
Claims priority, application Switzerland, Apr. 24, 1980, 3176/80
Int. Cl.³ D03D *42/24*

U.S. Cl. 139—142 6 Claims

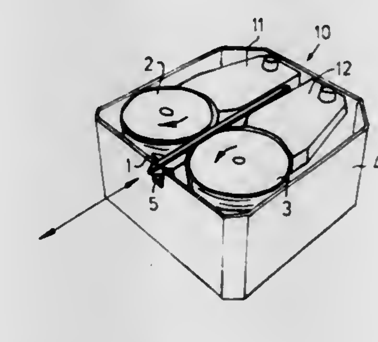

1. An apparatus for picking shuttles, especially projectile-like shuttles of a loom, comprising:
at least one pair of driven rolls which can be placed into contact with opposite sides of a shuttle to be inserted into a shed along a predetermined trajectory;
a respective spring-loaded pivotal lever at which there is rotatably mounted a related one of the rolls;
said pivotal levers extending essentially parallel to the shuttle trajectory;
each of said pivotal levers being pivotable about a stationary axis and having a free end;
means for simultaneously placing both of the rolls into contact with the shuttle;
said placing means including an adjustment element;
pressure springs acting at said free ends of said pivotal levers for placing the free ends of both pivotal levers into operative association with said adjustment element; and
said rolls possessing a radial resilient-yielding action which increases at least approximately lineraly as a function of the increasing radial contact pressure upon placement of the rolls into contact with the shuttle.

4,373,558
BOOKBINDING WIRE STOCK PRODUCTION METHOD AND APPARATUS

Kenneth H. Dawson, Newark, Calif., assignor to Spiral Binding Company, Inc., Clifton, N.J.

Filed Sep. 24, 1980, Ser. No. 190,447
Int. Cl.³ B21F *1/04*

U.S. Cl. 140—71 R 5 Claims

1. Apparatus for producing wire bookbinding stock comprising a pusher shaft for rotation in incremental steps and for reciprocating motion relative to the axis of rotation, a hub for supporting said shaft, a pair of forming arm members secured to said hub for pivotal movement relative to said hub and for drawing wire from a supply, cam followers connected to said members for controlling the pivotal motion of said forming arm members, a ring spaced slightly from and in alignment with one of said forming arm members, a set of pins protruding radially from the rim of said ring for sequential alignment with one of said forming arm members, and another ring axially aligned in a plane parallel with and spaced axially from said ring, said another ring also having a set of pins protruding radially from the rim thereof for sequential alignment with said pusher shaft, whereby said forming arm members lace the wire around said sequentially aligned pins in order to keep uniform

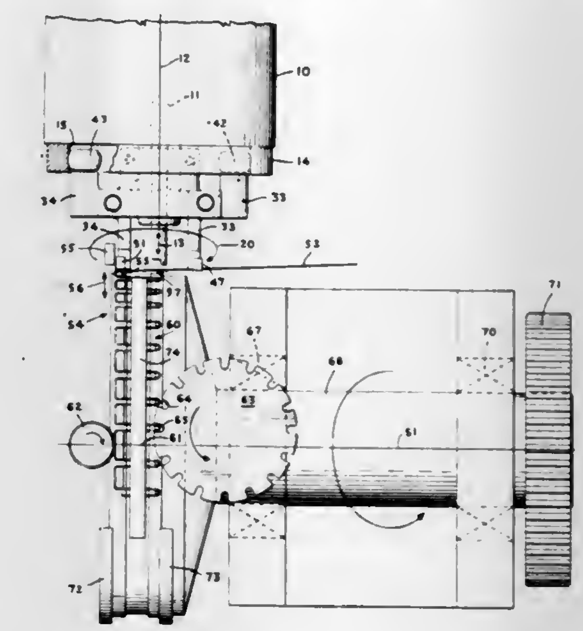

tension on the wire throughout winding to avoid creating stresses in the wire and thus produce wire bookbinding stock.

4,373,559
APPARATUS FOR PRESSURIZING AN ADDITIVE TRANSFER DEVICE

Donald L. Mowles, Libertyville; James F. Middaugh, Gurnee; Sangvorn Rutnarak, Vernon Hills, and Joseph N. Genese, Waukegan, all of Ill., assignors to Abbott Laboratories, North Chicago, Ill.

Filed Dec. 4, 1980, Ser. No. 213,132
Int. Cl.³ B65B *3/04*

U.S. Cl. 141—18 14 Claims

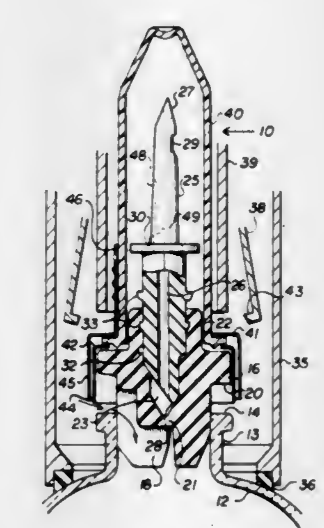

9. An apparatus for pressurizing an additive transfer unit for storing and transferring a fluid material to a solution container having an exposed closure, said transfer unit including:
a self-pressurized additive container for storing the fluid material to be transferred, said additive container having a rigid neck portion defining a finish, the opening in said container being sealed by a closure affixed thereto;
said closure having a shoulder for resting against said finish of the rigid container neck, said closure including a puncturable stopper positioned in sealing engagement with the opening in the additive container and in a substantially stationary manner, said stopper including channel portion to permit the introduction of a pressurizing media when said closure partially engages said container neck;
means for affixing the stopper to the additive container;
said stopper including a central opening extending along the longitudinal axis thereof with an end of the stopper pro-

jecting into the container being sealed by said puncturable diaphragm;
a piercing member having a passageway therethrough for the flow of said medicament and a point on both ends thereof and slidably disposed within the central opening in said stopper, one end of the piercing member extending from said opening;
said piercing member having a stop and being movable from a first position for entry through the closure of the solution container to a second position for puncturing of the diaphragm of the stopper in the additive container and permit the said fluid material within the additive container to transfer into the solution container;
said stop of the piercing member including an annular shoulder extending from the body thereof at a point in the portion of the piercing member which extends from the central opening in the stopper, said shoulder preventing excessive movement of the piercing member in the central opening in the stopper when the piercing member is inserted in the closure of said solution container;
said piercing member including an elongated body with said point on either end thereof and a projection extending from the body intermediate the ends thereof;
the central opening within the stopper including an undercut to receive the projection on the piercing member when the piercing member is moved from the first position to the second position within the central opening in the stopper for puncturing of the diaphragm of the stopper whereby the projection on the piercing member will engage the undercut in the opening in the stopper to thereby retain the piercing member within the opening in the stopper when the transfer unit is withdrawn from the solution container;
said apparatus comprising:
filling collar means engagable in a fluid tight manner on said additive container and surrounding said closure, said filling collar means being operatively connected to a source of pressurizing fluid media; and
crimping means concentrically and internally positioned with respect to said filling collar means to engage said closure affixing means to affix said closure to said additive container;
a pathway being formed by said closure channel portion in said diaphragm portion to permit the pressurizing fluid media to enter the additive container from the filling collar means.

4,373,560

APPARATUS FOR FILLING CAULKING TUBES

Robert M. Elsworth, c/o Sam Gray, Main Box 19, Georgetown, Exuma, The Bahamas, assignor to Robert M. Elsworth, Londonville, N.Y.

Filed Apr. 18, 1979, Ser. No. 31,115

Int. Cl.³ B65B *3/12*

U.S. Cl. 141—129 **26 Claims**

1. An improved apparatus for filling caulking cartridges with viscous liqid compositions comprising,
a frame;
a drive means at the lower portion of said frame having conveyor belt means which conveyor belt means passes through the lower portion of said frame said conveyor means carrying a plurality of caulking cartridges which are initially empty;
a reservoir means at the top portion of said frame having therein stored said viscous compositions;
linkage means driven by said drive means and extending from lower portion of said frame to the upper portion of said frame;
block means located beneath said reservoir means on said frame and containing therein core means with cavities for receiving said compositions and piston means located adjacent to said block and core means wherein said linkage means drives said core means and said piston means to receive measured quantities of said viscous compositions from said reservoir means and deposit said compositions in empty caulking cartridges passing on said conveyor

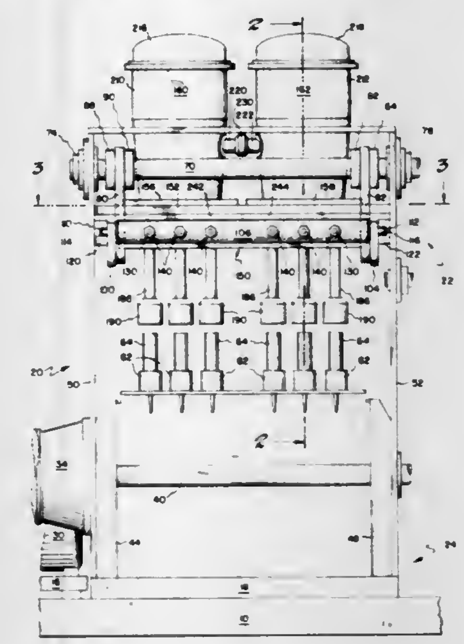

means under said valve core means and piston means wherein said core means rotates in said block means by the use of roller bearing means.

4,373,561

SUMP OIL DRAINING AND COLLECTING DEVICE

Jürgen Berger, Rheingaustr. 115, D-6200 Wiesbaden, Fed. Rep. of Germany

Filed Jul. 31, 1980, Ser. No. 174,007

Int. Cl.³ B65B *3/04*

U.S. Cl. 141—330 **7 Claims**

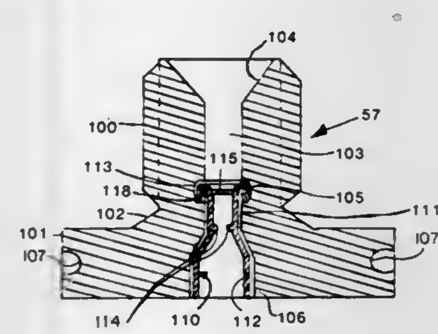

1. A device for draining and collecting oil from motor vehicle oil sumps comprising:
an oil collecting vessel;
a drain hose;
a drain spigot having a first and a second end, the first end comprising an edge and the second end being attached to the drain hose;
a drain plug having a body provided with oil outlet passage, which is closed by a membrane;
wherein the spigot is formed for engagement into the oil outlet passage, the first end of the spigot being capable of rupturing the membrane thus providing an oil outlet flow from the oil sump through the oil outlet passage, the spigot, the drain hose into the oil collecting vessel;
wherein the membrane is formed by a plastic cup and further comprising means for locking said cup in said oil outlet passage; and
wherein said plastic cup has a ring collar surrounding said membrane, and wherein said oil outlet passage has a ring groove, said ring groove and said ring collar being formed as to engage in a snapping action.

4,373,562

SPLINE JOINTS AND METHOD AND APPARATUS FOR MAKING SAME

Joseph O. Vernon, 209 Lyons Ave., Tazewell, Va. 26451

Continuation-in-part of Ser. No. 198,072, Oct. 17, 1980, abandoned. This application Dec. 11, 1980, Ser. No. 215,315

Int. Cl.³ B27C *5/10*

U.S. Cl. 144—144.5 R **10 Claims**

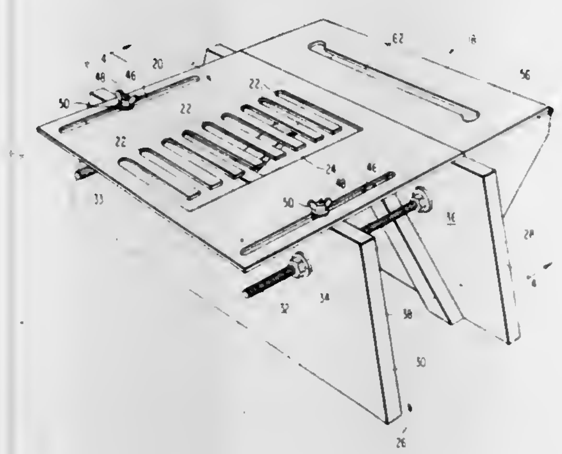

1. An apparatus for forming a joint between two flat members having bevelled ends in abutting relationship comprising:
(a) a groove forming template having slot means for guiding a router through a path;
(b) a stationary member and adjustable member moveable relative to said stationary member, said groove forming template being fixed to said stationary member;
(c) said stationary member and said adjustable member having opposed inner faces with guide means for locating flat members at an angle to the underside of said template, with an end of a flat member sufficiently adajcent said template to permit a router to cut a groove through the ends when said router is moved through said slot means; and
(d) securing means for securing a flat member between said moveable member and said stationary member and positioned against said guide means and in a plate substantially perpendicular to said inner faces.

4,373,563

SAWING OF LUMBER FROM LOGS

Alan Kenyon, House No. 3, Acme Township, Sabie, Transvaal, South Africa

Continuation of Ser. No. 950,313, Oct. 10, 1978, abandoned, which is a division of Ser. No. 599,950, Jul. 28, 1975, Pat. No. 4,127,044. This application Jan. 29, 1981, Ser. No. 230,041

Claims priority, application South Africa, Jul. 30, 1974, 74/4840

Int. Cl.³ B27B *1/00*

U.S. Cl. 144—357 **8 Claims**

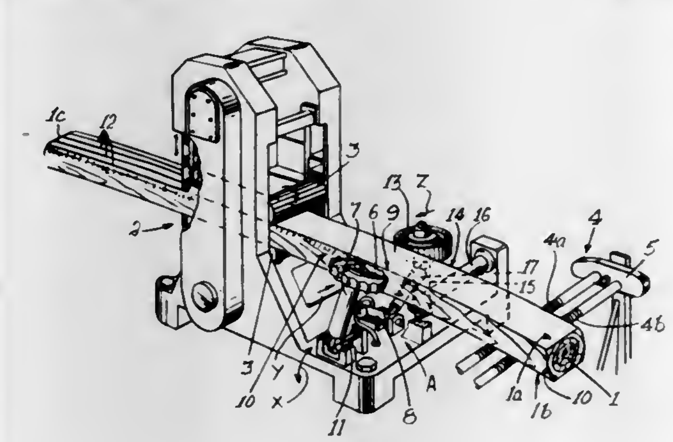

1. A method of sawing boards, planks or other sawn lumber from an elongated timber log or cant, comprising the steps of feeding the log or cant, longitudinally through a saw; sensing the longitudinal configuration of an unsawn longitudinally extending side surface of the log or cant on one side only of the log or cant as the latter passes through the saw; orientating the log or cant relative to the saw in accordance with the sensed configuration by exerting only resilient lateral orientating pressure on the log or cant, only on the unsawn side thereof on which the longitudinal configuration is sensed to saw the log or cant longitudinally along at least one saw line substantially parallel to the sensed configuration and restricting the laterally inward extent of the action of the resilient orientating pressure on the log or cant according to the required spacing of the saw line from the sensed configuration.

4,373,564

SELF-PROPELLED WOOD PROCESSING APPARATUS

Leo L. Heikkinen, Prentice, Wis. 54556

Filed Nov. 13, 1980, Ser. No. 206,522

Int. Cl.³ B27L *7/00*

U.S. Cl. 144—366 **10 Claims**

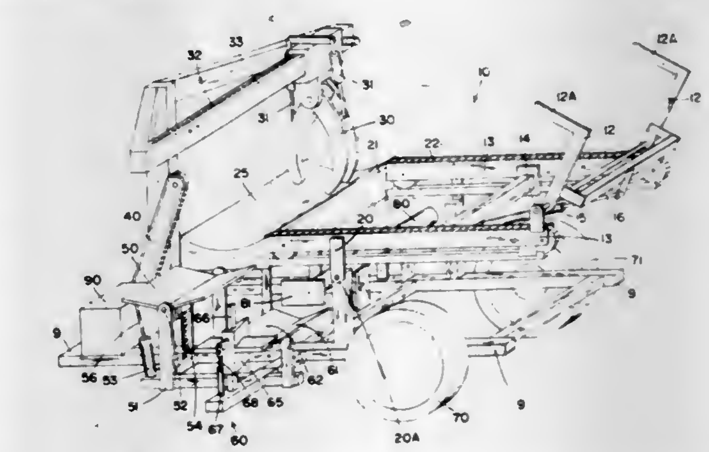

1. A self-propelled apparatus for converting a log into firewood comprising:
a pick-up member for lifting a plurality of logs onto a log deck;
a tiltable log deck for receiving a plurality of logs and for coacting with said pick-up member;
means for delivering a log from said log deck to a log feeder;
a log feeder having means for grasping and securely holding a log;
means for cutting the log into fireplace wood when said log is held by said log feeder;
means for diverting the cut logs to a splitting mechanism;
a splitting mechanism for splitting the cut logs into fireplace wood; and
means for propelling the apparatus to permit an operator to pick logs from a pile with said pick-up member and then transfer the logs to said log deck.

4,373,565

MALLET

Eduardo R. R. Soto, Rosario, Argentina, assignor to Tecnologia Argentina S.A., Rosario, Argentina

Filed Mar. 17, 1981, Ser. No. 244,782

Claims priority, application Argentina, Apr. 16, 1980, 280707

Int. Cl.³ B25D *1/00*

U.S. Cl. 145—36 **10 Claims**

1. Malet or hammer having
a metal core (**100**) having two end surfaces (**102, 103**), and a bottom surface (**109**);
an opening (**M, M'**) formed in the core and extending through the bottom surface to receive a handle (**L**);
and striking portions (**201, 202**) of elastomer material secured to the metal core,
wherein, in accordance with the invention,
the metal core (**100**) has generally ellipsoid shape;
the end surfaces (**102, 103**) are parallel planes having a sur-

face area which is between 50% to 70% of the area of the core at a central section thereof;
an essentially plane top surface (**106**) extending transversely to the end surfaces;
essentially plane side surfaces (**107**, **108**) extending laterally of a plane of symmetry through the handle opening (M, M');
a first inclined surfaces (**110**) connecting said end surfaces (**102**, **103**) with said plane top surface (**106**);
second inclined surfaces (**112**) connecting the end surfaces (**102**, **103**) and the bottom surface (**109**);
third inclined surfaces (**111**) connecting said end surfaces (**102**, **103**) and said side surfaces (**107**, **108**);
a projection (**104**, **105**) extending at right angles from each of the plane end surfaces (**102**, **103**), said projections having rounded end portions;

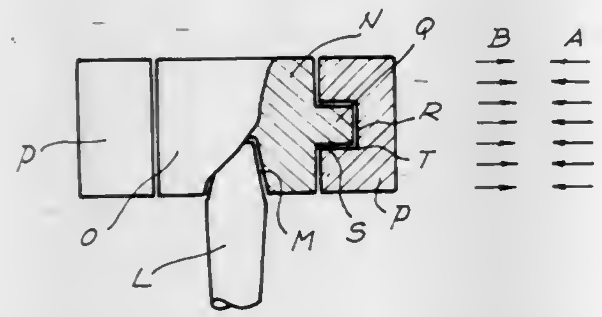

and wherein a unitary plastic cover element (**200**) is provided having said striking portions (**201**, **202**) formed thereon at terminal ends of said element,
said plastic cover element being formed with internal surfaces which match and fit said end surfaces (**102**, **103**), said top surface (**106**), said side surfaces (**107**, **108**) and said first, second and third inclined surfaces (**110**, **111**, **112**),
the striking portions (**201**, **203**) being formed with recesses to accept said projections (**104**, **105**); and
wherein the area of the cover element, in transverse section, increases by at least 30% from the end surfaces of the striking portions to the central section, and the wall portions of the cover element adjacent said top surface and said side surfaces are of essentially uniform thickness.

4,373,566
PNEUMATIC RADIAL TIRE HAVING A REDUCED ROLLING RESISTANCE
Hiroshi Hirakawa, Musashino; Akio Sato, Higashimurayama; Takashi Takusagawa, Ohme, and Nobumasa Ikeda, Kodaira, all of Japan, assignors to Bridgestone Tire Co., Ltd., Tokyo, Japan
Filed Jun. 3, 1981, Ser. No. 270,206
Claims priority, application Japan, Jun. 17, 1980, 55-80892
Int. Cl.³ B60C *9/18, 13/00*
U.S. Cl. 152—353 G **8 Claims**

1. A pneumatic radial tire comprising;
a toroidal carcass including radially arranged cords, a belt layer superimposed about the crown portion of the carcass and including a plurality of cord layers, each cord being inclined at an angle within a range between 60° and 80° with respect to the radial plane of the tire and each cord of adjacent cord layers being crossed with each other, a bead core around which the lower end of the toroidal carcass is wound to form a turn-up portion, a rubber filler disposed on said bead core and sandwiched between the carcass and its turn-up portion; a side rubber outwardly covering a side portion and bead portion of the toroidal carcass, a tread rubber for outwardly covering the crown portion of the carcass inclusive of the belt layer and forming a joint portion with the side rubber, a relatively thin base rubber disposed directly below the joint portion between the side rubber and the tread rubber and superimposed about the outer surface of the carcass and belt layer and made integral therewith, said base rubber having a loss modulus of elasticity of 2.0 to 12 kg/cm² and its side edge portion extending to below the side rubber, and a stress relieving groove composed of a depression of

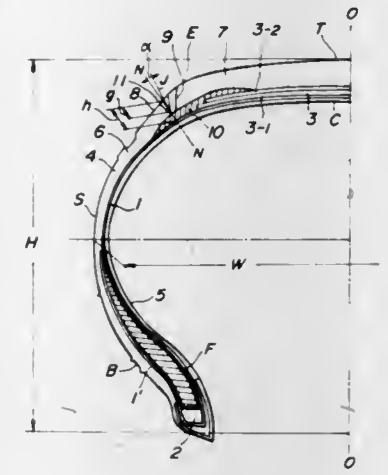

the side rubber facing toward the base rubber at a position near the joint portion between the side rubber and the tread rubber and extending along the circumference of the tire.

4,373,567
TIRE RIM AND ADAPTER
Pierre J. R. Declercq, Gilsdorf, Luxembourg, assignor to The Goodyear Tire & Rubber Company, Akron, Ohio
Filed Oct. 10, 1980, Ser. No. 196,727
Int. Cl.³ B60B *21/10, 25/08*
U.S. Cl. 152—405 **13 Claims**

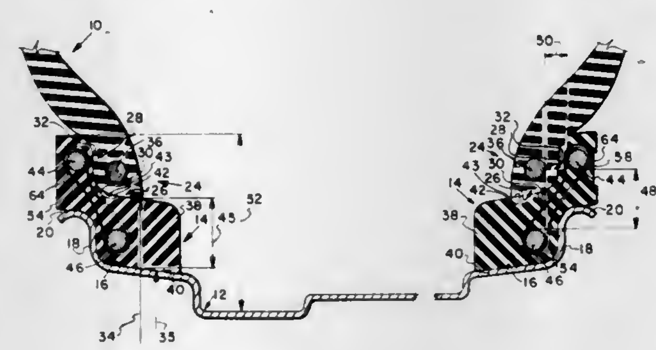

1. An adapter for adapting a rim to a tire having a bead diameter larger than the diameter of the rim bead seats, said rim having a bead seat extending generally parallel to the rotational axis of the rim and a flange which extends generally radially outwardly therefrom to normally engage the bead portions of a tire for mounting of a tire on the rim, and a tire having a bead core in a bead portion which has a radially inner seating surface and a surface which extends generally radially outwardly therefrom, the diameter of the radially inner seating surface of the bead portion of the tire being greater than that of the rim bead seat, said adapter comprising an annular body having a first surface which is contoured to conform to and engage the respective flange and bead seat of the rim, and a second surface having a bead seat which is contoured to conform to and engage the seating surface of the respective bead of the tire, and thereby provides a bead seat on the adapter located radially outwardly from the rim bead seat, when the adapter is mounted on the rim, a distance which is sufficient to locate the adapter bead seat at least partly radially outwardly of said rim flange, a pair of annular cores disposed within said annular body, and at least one reinforcing ply enveloping said pair of cores in said annular body, said cores in said annular body being spaced apart in a direction perpendicular to said axis a distance which is greater than the distance which they are spaced apart in a direction parallel to said axis, the radially outer core of said cores in said annular body being disposed at least in part radially outwardly of the respectively associated bead core in the tire, the radially inner core of said cores in said annular body being disposed at least in part in overlapping relationship to the respectively associated bead core in the tire in a direction parallel to said axis.

4,373,568
REDUCIBLE VOLUME SUN-BLIND
Enrico Lancellotti, Casalecchio di Reno, Italy, assignor to Sunfilter S.r.l., Bologna, Italy
Filed May 23, 1980, Ser. No. 152,842
Claims priority, application Italy, Jun. 7, 1979, 48563/79[U]
Int. Cl.³ E05D *15/00;* **E06B** *7/086*
U.S. Cl. 160—184 **9 Claims**

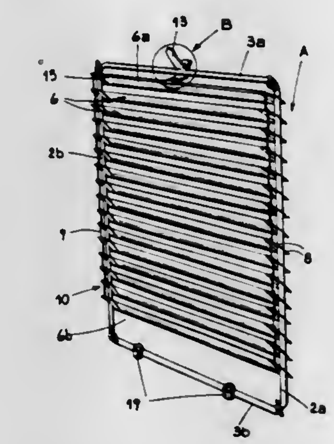

1. Reducible volume sun-blind comprising: an articulated parallelogram that defines a support frame for the blind; means for stabilizing the said parallelogram in any one of a plurality of configurations; a plurality of parallel strips having extremities rotatably connected, with respect to longitudinal axes of the individual strips, to two parallel sides of the parallelogram; elastic means for tensioning the said strips interposed between at least one extremity of said strips and the relevant side of the parallelogram; means responsive to a manual force on one of said blinds and positioned within the outer extremities of said parallelogram for synchronously rotating the said strips, with respect to their longitudinal axes, from a position in which surfaces of said strips are practically coplanar with the surface defined by the said parallelogram to a position in which the surfaces of the strips are approximately perpendicular thereto; and means for stabilizing the said strips in a desired one of a plurality of positions, said means for stabilizing extending between one of said strips and one of the sides of the parallelogram to thereby fix the orientation of the strips with respect to the parallelogram.

4,373,569
WINDOW SHADE ROLLER ASSEMBLY
Bernard Barettella, 688 Maple Ave., Ridgefield, N.J. 07657
Filed Oct. 6, 1980, Ser. No. 194,231
Int. Cl.³ A47G *5/02*
U.S. Cl. 160—263 **10 Claims**

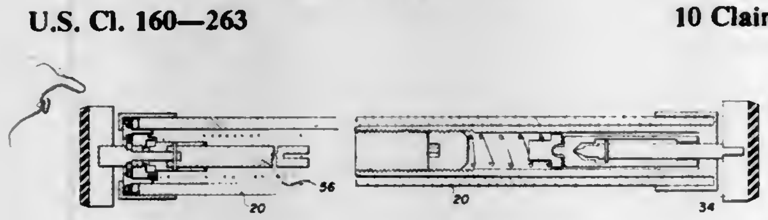

1. A cylindrical window shade roller assembly adapted for mounting either by frictional engagement within the periphery of a window frame; or alternatively by being hang-mounted at receiving brackets on the window frame; said assembly comprising in combination:
a cylindrical window shade roller having a first and second axial recesses, respectively at the first and second ends thereof;
a projecting first shaft being mounted in said first recess to enable rotation of said shade roller thereabout during raising and lowering of the associated shade when said assembly is mounted at said window frame, and spring means wound during said rotation for biasing said roller to enable return thereof to its initial position;
a two-way mounting assembly being received at said second axial recess, said mounting assembly comprising:
(1) a hollow cylindrical housing adapted for being received in said second axial recess and terminating in a cap portion having a diameter larger than that of said housing, whereby said cap may close said second end of said shade roller;
(2) a second shaft extending centrally through said cap and into said housing, the externally facing distal end of said shaft terminating in a mounting pintle;
(3) spring means extending within said housing and bearing against a rearward closing thereof;
(4) a hollow cylindrical link within said housing between said shaft and spring means, said link being closed at the end thereof toward said spring and open at the other end thereof, said link receiving at its open end the rearward portion of said second shaft; said shaft being selectively moveable between a first longitudinal position where it is retracted within said link, and a second longitudinal position whereat said shaft is telescoped with respect to and detented at said link; said shaft being rotatable with respect to said housing at each of said first and second positions;
whereby when said second shaft is in said first, withdrawn position, substantially only said pintle projects through said cap to enable said hang-mounting of said window shade assembly; and whereby when said shaft is in said second, extended position, said window shade assembly may be frictionally secured within said window frame border by positioning the end of said first shaft in mechanical engagement with one side of said window frame periphery, moving said second shaft inwardly to compress said spring, emplacing said shade roller assembly within said frame, and permitting the restorative force of said spring to expand said second shaft against said window frame to effect frictional engagement therewith.

4,373,570
PORTABLE FABRIC DISPLAY BOOTH ASSEMBLY
Jeffrey M. Nussdorf, 1612 Worcester Rd., Framingham, Mass. 01701, and John C. McMillan, 24 St. John Pl., Westport, Conn. 06880
Filed Jul. 31, 1980, Ser. No. 173,954
Int. Cl.³ A47G *5/00*
U.S. Cl. 160—352 **5 Claims**

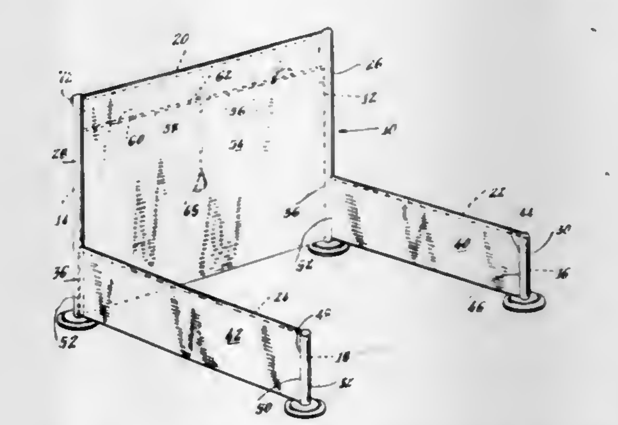

1. A portable fabric display booth assembly for at least partially enclosing an area defined by a pair of spaced posts and a pair of spaced standards having side and back railings respectively comprising: each of said posts and standards being provided with a sleeve having a first closure member for closing and opening said sleeve and a second closure member, a pair of flat fabric pieces each having closure members on opposite

ends thereof which are adapted to be supported by respective side railings and to be interconnected with respective closure members on said respective post and standard to form side fabric panels, a main flat rear fabric piece supported by the back railing and having closure members at opposite ends thereof for interconnecting with the closure members on the sleeves on said spaced standards to form the back fabric panel of said display booth, a marginal top edge of said main flat rear fabric piece having an elongated sleeve coextensive therewith, an expandable pole in said elongated sleeve, and pockets located on the rear of each sleeve on said standards to hold the ends of said pole when said top of said flat fabric piece is drawn over the back railing to thereby hold said main piece in a taut condition.

4,373,571
APPARATUS AND PROCESS FOR ELECTROMAGNETICALLY SHAPING A MOLTEN MATERIAL WITHIN A NARROW CONTAINMENT ZONE
John C. Yarwood, Madison, Conn.; Gerhart K. Gaule, Elberon, N.J., and Gary L. Ungarean, Woodbridge, Conn., assignors to Olin Corporation, New Haven, Conn.
Continuation-in-part of Ser. No. 213,127, Dec. 4, 1980. This application Apr. 24, 1981, Ser. No. 257,442
Int. Cl.³ B22D *27/02*
U.S. Cl. 164—467 **42 Claims**

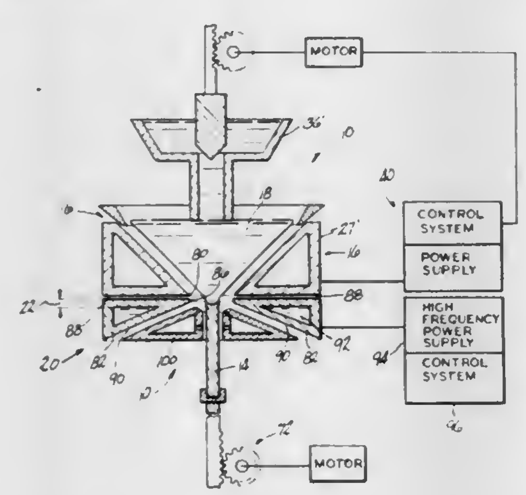

1. In an apparatus for electromagnetically forming a material into a desired thin strip shape, said apparatus comprising:
first portion means for containing a sump of said material in molten form;
second portion means downstream of and communicating with said first portion means, said second portion means defining a containment zone of 5 mm or less for electromagnetically shaping said molten material into said thin strip shape whereby efficiency is improved by reducing power consumption.

4,373,572
COMMERCIAL LAUNDRY HEAT RECOVERY SYSTEM
Richard O. Kaufmann, Tucson, Ariz., assignor to Thermal Engineering of Arizona, Inc., Tucson, Ariz.
Filed Mar. 5, 1981, Ser. No. 240,844
Int. Cl.³ F24H *1/00*
U.S. Cl. 165—1 **8 Claims**

6. A method for recovering heat from heated waste water in a commercial laundry, said method comprising the steps of:
(a) pumping the heated waste water through a plate and frame heat exchanger;
(b) entraining air bubbles in the pumped waste water to scour the surfaces of the plate and frame heat exchanger coming in contact therewith;
(c) introducing fresh water into the plate and frame heat exchanger to receive heat from the waste water through a heat transfer effected by the plate and frame heat exchanger;
(d) withdrawing a first proportion of the heated fresh water;
(e) conveying the first proportion of the heated fresh water to a cold water storage tank;

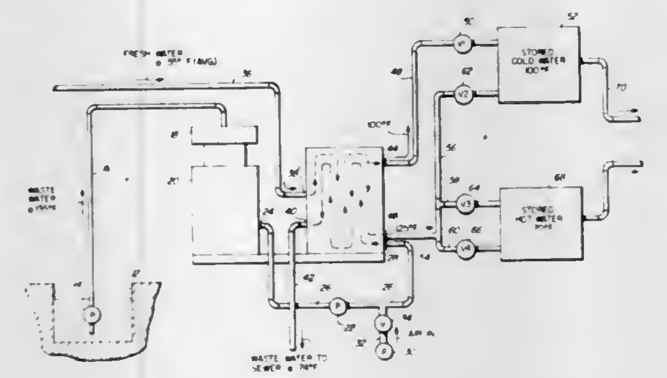

(f) withdrawing a second proportion of the heated fresh water; and
(g) conveying the second proportion of the heated fresh water to a hot water storage tank.

4,373,573
LONG TERM STORAGE AND USE OF SOLAR ENERGY
Albert Madwed, 25 Saxton Dr., Bridgeport, Conn. 06604
Filed May 2, 1980, Ser. No. 146,125
Int. Cl.³ F25B *13/00;* **F24J** *3/02*
U.S. Cl. 165—2 **16 Claims**

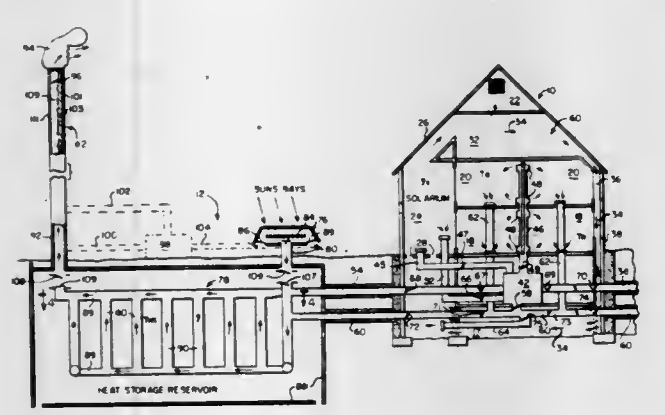

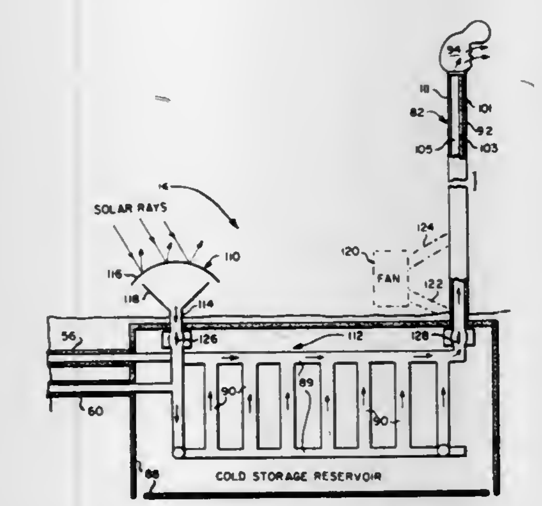

16. A method for the storage and use of solar energy by a thermal load over long term periods which comprises:
(a) introducing air from the atmosphere into a collection zone;
(b) passing the air from said collection zone into and through an underground storage zone having a heat capacity sufficient to store thermal energy for the major part at least of an entire heating or cooling period;
(c) during a first heating or cooling period, at times at least circulating an air stream into said collection zone, into and through said thermal storage zone at least in part by exposing an elongated column of air connecting the thermal storage zone with the atmosphere to solar heating, and outwardly from said thermal storage zone without passing through said thermal load, said stream affecting substantial heat exchange with the earth in said thermal storage zone during said first heating or cooling period; and
(d) during the succeeding heating or cooling season, respectively, isolating said underground thermal storage zone from the ambient atmosphere and flowing an air stream through said zone and through said thermal load to affect heating or cooling of said heat load.

4,373,574
METHOD AND APPARATUS FOR ALTERNATELY HEATING AND COOLING A HEAT EXCHANGER
Otmar U. Schäfer, Pienzenauerstrasse 9, 8000 München 80, Fed. Rep. of Germany
Filed Jun. 18, 1980, Ser. No. 160,477
Claims priority, application Fed. Rep. of Germany, Oct. 30, 1979, 2943797
Int. Cl.³ F24D *11/00*
U.S. Cl. 165—2 **5 Claims**

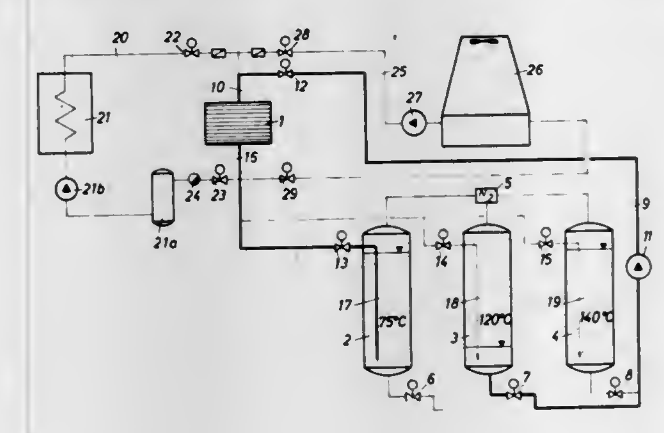

1. A method of alternately heating and cooling a heat exchanger, such as a press or a reaction vessel, of a heating and cooling installation with heat recovery, and having at least two storage vessels respectively of higher and lower average temperature and a conduit system and a boiler, comprising the steps of:
feeding liquid of the storage vessel of higher temperature into said heat exchanger for heating-up of said heat exchanger, and for cooling-off of the heat exchanger, feeding into the heat exchanger liquid of said storage vessel of lower temperature,
feeding steam of a generator directly into the heat exchanger, in the last heating-up stage of the heat exchanger as well as during the heating stage, in which the heat exchanger is held at high temperature,
prior to said last heating-up stage, displacing the liquid heat carrier present in the heat exchanger and in a portion of said conduit system, into a liquid storage vessel with variable liquid level, and for the further heating-up and heating of the heat exchanger, steam from the steam generator is fed to the heat exchanger, and wherein during cooling-off the heat exchanger and said portion of the conduit system are first filled with liquid from said liquid storage vessel of variable liquid level.

4,373,575
INBOARD SEAL MOUNTING
John R. Hayes, Indianapolis, Ind., assignor to General Motors Corporation, Detroit, Mich.
Filed Mar. 23, 1981, Ser. No. 246,430
Int. Cl.³ F28D *19/00*
U.S. Cl. 165—7 **3 Claims**

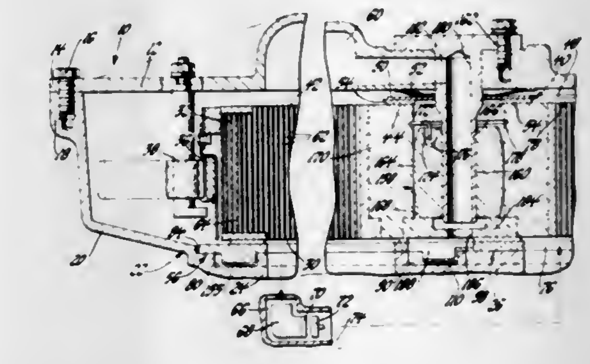

1. In a gas turbine engine regenerator system of the type including a regenerator disc disposed on a block portion of said engine for rotation about a spindle means and intercepting a pressurized compressor discharge passage and a power turbine exhaust passage, said compressor discharge and turbine exhaust passages being separated by an engine block cross arm, and inboard and outboard rim seal means between said disc and said engine block, an improved cross arm seal arrangement comprising, means on said engine block cross arm defining a groove flanked on opposite sides by a pair of flat surfaces, a ceramic seal means having a pair of flanges engaging respective ones of said flat surfaces to support said seal means on said engine block and a base disposed in said groove, said seal means engaging said disc and defining thereat a cross arm seal, leaf spring seal means disposed in said groove between said block cross arm and said ceramic seal means for completing separation between said compressor discharge passage and said turbine exhaust passage at said cross arm, first auxiliary passage means for directing pressurized cold air from a high pressure zone on one side of said disc to said groove through said spindle means thereby to pressure bias said leaf spring seal means into engagement on one of said ceramic seal means and said block cross arm, and second auxiliary passage means for directing said pressurized cold air from said groove to a lower high pressure zone on the other side of said disc thereby to permit flow-through of high pressure cooling air for cooling said spindle means and said leaf spring seal means.

4,373,576
HEATING, VENTILATING AND AIR CONDITIONING SYSTEM WITH REVERSIBLE AIR FLOW
Kenneth Strupczewski, 5213 Windward La., Bensalem, Pa. 19020
Filed Jan. 8, 1981, Ser. No. 222,948
Int. Cl.³ F25B *29/00*
U.S. Cl. 165—48 R **6 Claims**

6. A heating and cooling system for a room comprising
first vent means positioned high in the room for delivering cooled air to the room;
second vent means positioned low in the room for delivering heated air to the room;
duct means for conveying air connecting first and second vent means;
cooling means and heating means for alternately cooling and heating the room;
reversible rotation fan means for delivering more air when blowing in one direction than the other, said fan means

constituting means for causing the air to flow from the second vent to the first vent at higher velocity while

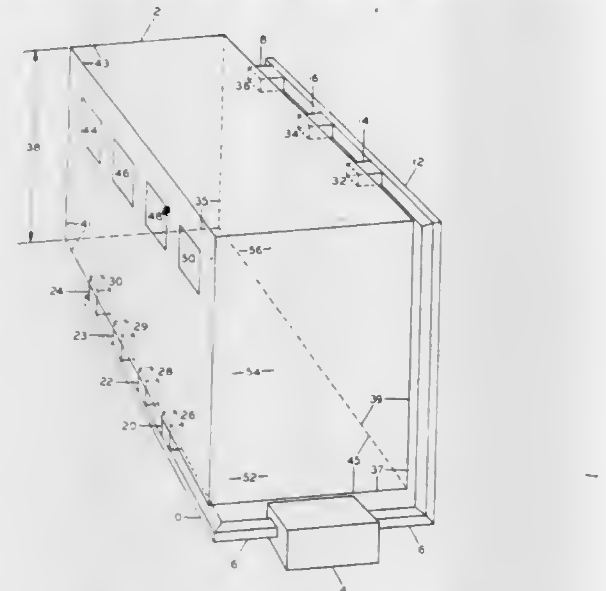

cooling, and for causing the air to flow from the first vent to the second vent at lesser velocity while heating.

4,373,577
HEAT EXCHANGER ASSEMBLY
Russell G. McMillen, Fort Wayne, Ind., assignor to International Harvester Co., Chicago, Ill.
PCT No. PCT/US80/00935, § 371 Date Jul. 21, 1980, § 102(e) Date Jul. 21, 1980, PCT Pub. No. WO82/00343, PCT Pub. Date Feb. 4, 1982
PCT Filed Jul. 21, 1980, Ser. No. 269,432
Int. Cl.³ F28F *9/26*
U.S. Cl. 165—122 **21 Claims**

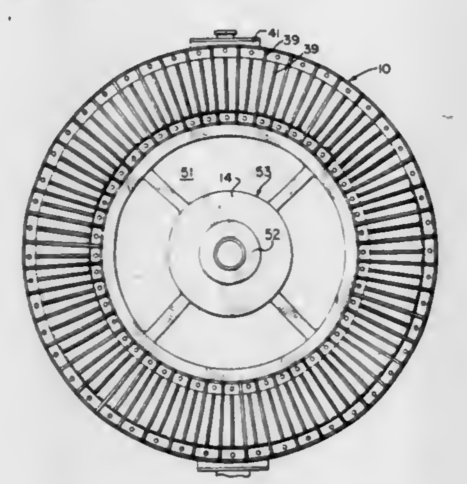

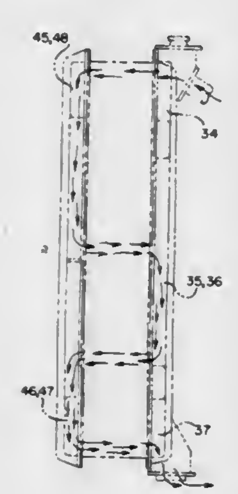

1. A heat exchanger assembly comprising:

a heat exchange means disposed about a central axis, said heat exchange means including:

fluid inlet means for introducing a fluid into the interior of said heat exchange means, fluid outlet means spaced from said fluid inlet means for discharging fluid from the interior of said heat exchange means, and fluid passageway means extending between and providing a fluid path between said fluid inlet means and said fluid outlet means, said fluid passageway means including a plurality of first elongatetd segment means lying generally in a first plane perpendicular to said central axis, a plurality of spaced segment means extending substantially parallel with respect to said central axis, one end of each of said spaced segment means being in fluid communication with a respective portion of a respective one of said elongated segment means, said fluid inlet means being in fluid communication with a portion of a respective first one of said first elongated segment means, said segment portion of said respective first one of said first elongated segment means being spaced intermediate the ends thereof, and said fluid passageway means further including a plurality of second elongated segment means lying generally in a second plane perpendicular to said central axis and axially spaced and parallel with respect to said first plane, and one end of each of said spaced segment means being in fluid communication with a respective portion of a respective one of said second elongated segment means.

4,373,578
RADIATOR WITH HEAT EXCHANGER
Zalman P. Saperstein, Gurnee, Ill.; Refki M. El-Bourini, West Allis, and John E. Munch, Jr., Racine, both of Wis., assignors to Modine Manufacturing Company, Racine, Wis.
Filed Apr. 23, 1981, Ser. No. 257,223
Int. Cl.³ F28D *7/10*
U.S. Cl. 165—141 **2 Claims**

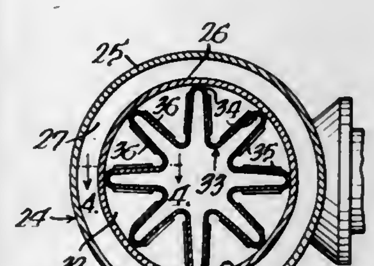

1. A cooling radiator having secondary cooling means comprising:

a pair of spaced liquid coolant tanks, one of which is an inlet tank having a liquid coolant inlet adjacent one end and the other of which is a liquid outlet tank having an outlet adjacent its corresponding opposite end;

interconnecting spaced coolant tubes between said tanks for flow of liquid coolant between the tanks by way of said tubes;

a heat exchanger for cooling a second liquid located in heat exchange relationship with said outlet tank, said heat exchanger having spaced inlet and outlet, a confined liquid space therebetween for flow of a liquid through the space in heat exchange relationship with the liquid coolant in said outlet tank, said heat exchanger comprising substantially concentric tubes spaced apart to provide a confined liquid space; and

an internal fin within said heat exchanger located within an inner tube in heat exchange relationship with the liquid in said outlet tank, said heat exchanger internal fin comprising a sheet metal heat conducting member having spaced sides arranged in a star shape with the star tips bearing against the inner surface of the inner tube and said tips comprising the outer extremities of spaced fingers comprising said star, the sides of said fingers having apertured flutes for creating turbulence in the liquid coolant flowing through said inner tube, over the inner and outer surfaces of said sheet metal and through said fluted apertures.

4,373,579
PLATE HEAT EXCHANGER
Ake Jernqvist, Lund, and Ulf Bolmstedt, Staffanstorp, both of Sweden, assignors to Alfa-Laval AB, Tumba, Sweden
Filed Jun. 30, 1980, Ser. No. 164,144
Claims priority, application Sweden, Jul. 6, 1979, 7905915
Int. Cl.³ F28F *3/08*
U.S. Cl. 165—167 **3 Claims**

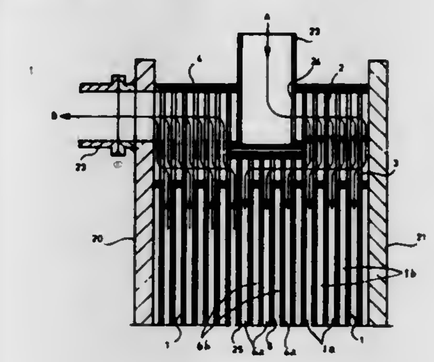

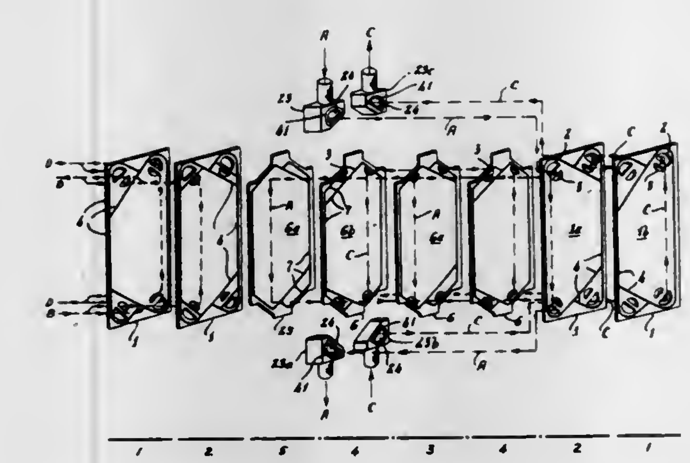

1. A heat exchanger comprising a first series of plates, a frame-work in which the plates are clamped adjacent to each other, peripheral gaskets located between adjacent plates and forming therewith a first series of heat exchanging passages for heat exchanging fluids, each plate being generally rectangular in shape and having at each of its corner portions an opening which forms with corresponding openings of adjacent plates a first manifold duct for one of said fluids, a second series of plates clamped adjacent to each other in said frame-work and each being generally rectangular in shape, peripheral gaskets located between adjacent plates of said second series and forming therewith a second series of heat exchanging passages for said fluids, each plate of said second series having one of its corners cut away to form a recess corresponding to a said opening in the plates of the first series, said recesses forming a space aligned with a said manifold duct, and a connection piece sealingly clamped in said space between said plates and communicating with said manifold duct, the plates of both said series each having a separate opening forming a second manifold duct, said first manifold duct being connected to heat exchanging passages of both series through said second manifold duct.

4,373,580
TUBE SEALING IN TUBE BUNDLE HEAT EXCHANGERS
Rene Gossalter, P.O. Box 715, St. Gallen, Switzerland
Continuation of Ser. No. 10,756, Feb. 9, 1979, abandoned. This application Mar. 12, 1981, Ser. No. 243,034
Claims priority, application Switzerland, Feb. 13, 1978, 1539/78
Int. Cl.³ F28F *9/04*
U.S. Cl. 165—173 **9 Claims**

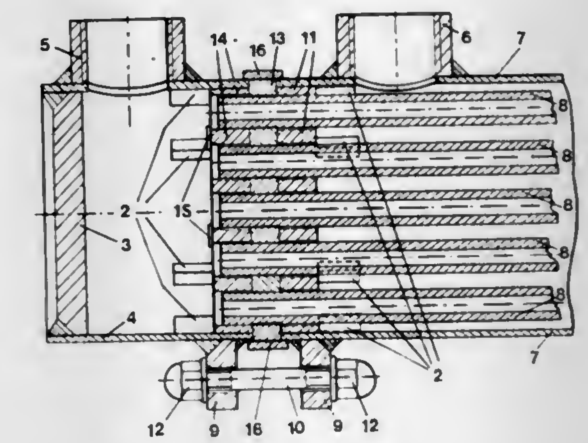

1. A tube bundle heat exchanger comprising a generally tubular housing including a jacket tube and an extension tube extending substantially coaxially with said jacket tube, said jacket and extension tubes having adjacent open ends relatively spaced apart, sealing means including an elastic sealing tube plate mounted in the space between said jacket and extension tubes and extending transversely thereof, a first rigid tube plate mounted within said extension tube in contact with said elastic tube plate and extending substantially parallel thereto, a second rigid tube plate mounted within said jacket tube in contact with said elastic tube plate and extending substantially parallel thereto, mounting means on at least one of said jacket and extension tubes for mounting at least one of said first and second rigid tube plates for movement axially of said jacket and extension tubes toward said elastic sealing tube plate, said mounting means including abutment means extending from the inner surfaces of at least one of said jacket and extension tubes for engaging the respective surface of the axially movable rigid tube plate which is opposite the surface thereof in contact with said elastic sealing tube plate, a plurality of heat exchanger tubes extending in spaced relationship axially of said jacket and extension tubes through aligned apertures formed in said first and second rigid tube plates and said elastic sealing tube plate, one end of each of said heat exchanger tubes opening into said extension tube, tube retaining means formed on said first rigid tube plate for retaining said heat exchanger tubes within said first rigid tube plate, circumferential sleeve means extending around the adjacent spaced ends of said extension and jacket tubes and over an annular gap therebetween to enclose said elastic tube plate, said sleeve means being formed to permit relative axial movement of said jacket and extension tubes, and a plurality of force applying means connected between said jacket and extension tubes and operative to move the spaced open ends thereof toward one another to cause axial movement of said first and second rigid tube plates against opposite sides of said elastic sealing tube plate and expansion of said elastic sealing tube plate against said heat exchanger tubes and the adjacent open ends of said extension and jacket tubes to enhance the sealing of said annular gap.

4,373,581

APPARATUS AND METHOD FOR RADIO FREQUENCY HEATING OF HYDROCARBONACEOUS EARTH FORMATIONS INCLUDING AN IMPEDANCE MATCHING TECHNIQUE

Robert L. Toellner, Duncan, Okla., assignor to Halliburton Company, Duncan, Okla.

Filed Jan. 19, 1981, Ser. No. 226,308

Int. Cl.[3] E21B *43/24, 47/00, 43/12*

U.S. Cl. 166—53 9 Claims

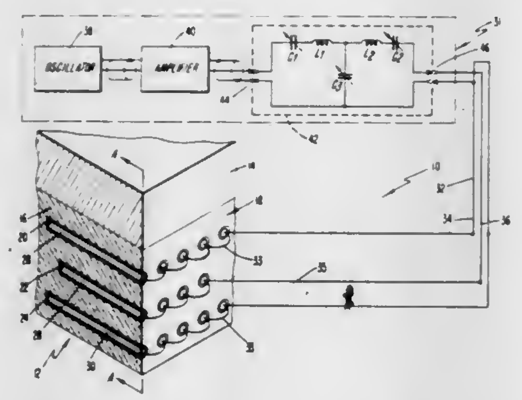

1. An impedance matching network having a first port connected to a high power radio frequency transmitter and a second port connected to a transmission line including conductors at least partially embedded in a hydrocarbonaceous earth formation to be heated, comprising a first and a second variable reactance means, said first and second variable reactance means comprising respectively, first and second independently variable capacitors, connected in series to form an upper leg of a T network; and a third variable reactance means, said third variable reactance means comprising a third independently variable capacitor, in shunt between the first and second variable reactance means to form the central leg of a T network, wherein the impedance presented by said transmission line during the heating of the hydrocarbonaceous formation is matched by holding one of the variable reactances at its minimum or maximum and adjusting the other two variable reactance means.

4,373,582

ACOUSTICALLY CONTROLLED ELECTRO-MECHANICAL CIRCULATION SUB

John M. Bednar; Daniel P. Postler, and Terry V. Jones, all of Houston, Tex., assignors to Exxon Production Research Co., Houston, Tex.

Filed Dec. 22, 1980, Ser. No. 218,602

Int. Cl.[3] E21B *34/08, 34/16*

U.S. Cl. 166—65 R 53 Claims

46. A device suitable for use in a wall as circulation sub comprising:

a housing having an inner bore, an exterior wall, at least one circulation port allowing fluid communication between the inner bore and the exterior wall and adapted at its upper and lower ends to connect to well drilling pipe or collars;

a piston sleeve slidably mounted within the inner bore of the housing, covering said at least one circulation port in one position, and having pressure responsive means adapted to move the piston sleeve to another position uncovering said at least one circulation port upon application of sufficient fluid pressure from the fluid communicating between the inner bore and exterior wall;

control valve means adapted to apply said sufficient fluid pressure to said piston sleeve pressure responsive means to move said piston sleeve to said another position; and

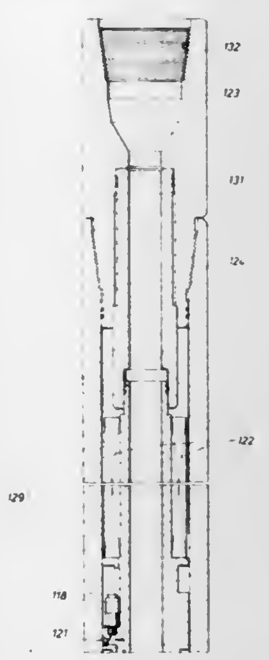

means for receiving an acoustic signal from an upper portion of the well and adapted to actuate said control valve means.

4,373,583

TEST-SYSTEM

Fleming A. Waters, Odessa, Tex., assignor to Otis Engineering Corporation, Dallas, Tex.

Filed Jan. 5, 1982, Ser. No. 337,098

Int. Cl.[3] E21B *34/14*

U.S. Cl. 166—113 3 Claims

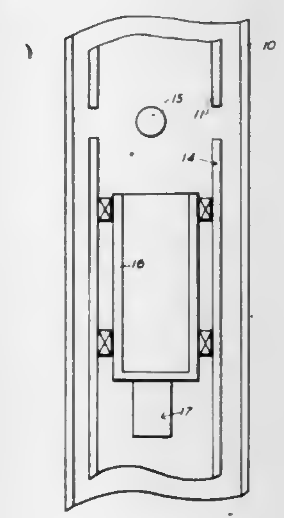

1. A test system for wells comprising,

a landing nipple having locking grooves therein,

a lock mandrel releasably locked in said landing nipple,

a pressure relief valve carried by the lock mandrel,

a valve suspended from the lock mandrel,

said valve including a valve body having lateral ports at its upper end and a valve member movable between open and closed positions,

a closing tool for engaging said valve member and moving it from open to closed position,

means for releasing said closing tool from said valve member with said valve member in closed position,

said closing tool having a small diameter extension at its upper end,

said closing tool and the valve member dimensioned such that said closing tool extension is opposite said ports when said tool and valve member are engaged and said valve member is in its open position, and

a pressure recording instrument suspended from the valve.

4,373,584

SINGLE TRIP TUBING HANGER ASSEMBLY

Raphael J. Silberman, Houston, Tex.; Frederick T. Tilton, La Habra, Calif.; Everett H. Smith, Houston, and Dennis A. Wichkoski, Pasadena, both of Tex., assignors to Baker International Corporation, Orange, Calif.

Filed May 7, 1979, Ser. No. 36,964

Int. Cl.[3] E21B *19/00*

U.S. Cl. 166—117.7 65 Claims

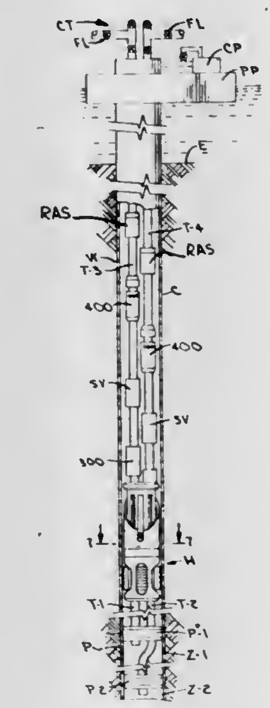

1. An apparatus for producing a well from plural productive zones penetrated by the well bore in which casing is set below the top of the well, said apparatus comprising: tubing hanger means supporting a plurality of lower production tubing string sections extending downwardly in the well bore and respectively communicating with one of said productive zones; anchor means on said tubing hanger means activatable into anchoring engagement with said casing; plural upper production tubing string sections received in said hanger means and extending to the top of the well and sealingly engaged within said tubing hanger means before, during, and after the anchoring engagement of said tubing hanger means with said casing; a latch apparatus carried on and extending between said upper production tubing string sections for initial securement of said tubing hanger means to each of said upper production tubing string sections and for unlatching of said upper production tubing sections from said hanger means, the sum of the weight of said tubing hanger means and each of said lower production tubing string sections, carriable by said latch apparatus prior to anchoring said tubing hanger means with said casing, whereby said upper production tubing string sections are respectively communicable with said downwardly extending production tubing string sections when the tubing hanger is set for production of the well.

4,373,585

METHOD OF SOLVENT FLOODING TO RECOVER VISCOUS OILS

John L. Fitch, Dallas, and Lynn D. Mullins, De Soto, both of Tex., assignors to Mobil Oil Corporation, New York, N.Y.

Filed Jul. 21, 1981, Ser. No. 285,696

Int. Cl.[3] E21B *43/22*

U.S. Cl. 166—263 27 Claims

1. A method of recovering viscous oil from a viscous oil-containing subsurface formation penetrated by at least one injection well and one production well comprising:

(a) establishing a fluid communication path extending between the injection well and the production well near the lower portion of said oil-containing formation;

(b) injecting a hydrocarbon solvent via said injection well into said fluid communication path, said solvent having a specific gravity less than the specific gravity of the oil contained in the formation and a viscosity not greater than 1/100 the viscosity of the oil contained in the formation under formation conditions and recovering fluids including oil and solvent from the fluid communication path via the production well until the fluid comprises an unfavorable ratio of oil to solvent;

(c) thereafter shutting-in said production well;

(d) continuing to inject a quantity of said hydrocarbon solvent into the fluid communication path via said injection well;

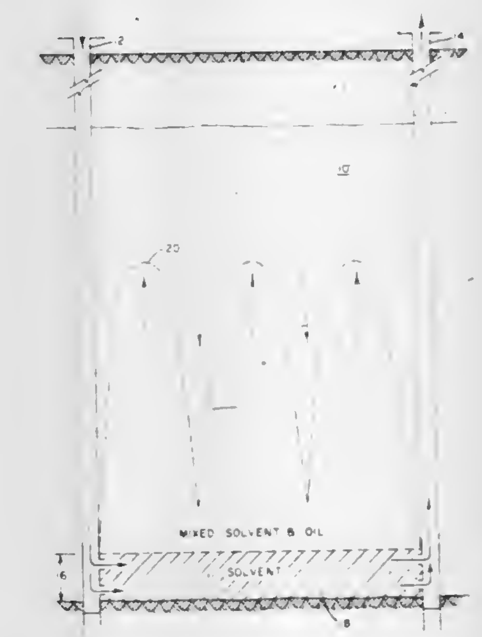

(e) shutting in said injection well along with the shut-in production well to permit said formation to undergo a soak period for a time sufficient for gravity-driven convection to substantially mix the solvent with the oil in the formation and thereby reduce its viscosity; and

(f) thereafter injecting a driving fluid into the formation via said injection well and recovering fluids including oil from said formation via said production well until the fluid being recovered from the production well comprises an unfavorable ratio of produced oil to driving fluid.

4,373,586

METHOD OF SOLVENT FLOODING TO RECOVER VISCOUS OILS

William C. Hunt, III, Dallas, Tex., assignor to Mobil Oil Corporation, New York, N.Y.

Filed Aug. 7, 1981, Ser. No. 290,758

Int. Cl.[3] E21B *43/22*

U.S. Cl. 166—263 38 Claims

21. A method of recovering viscous oil from a viscous oil-containing subsurface formation, said formation having no significant permeability barrier therein, and penetrated by at least one injection well and one production well comprising:

(a) establishing a fluid communication path extending between the injection well and the production well near the lower portion of said oil-containing formation;

(b) providing an interior production well located between the injection well and production well in fluid communication with the upper portion of the oil-containing formation;

(c) injecting a hydrocarbon solvent via said injection well into said fluid communication path, said solvent having a specific gravity less than the specific gravity of the oil contained in the formation under formation conditions, and recovering fluids including oil from the fluid communication path via the production well until solvent is detected in the fluid recovered from the production well;

(d) thereafter shutting-in said production well;

(e) continuing to inject a quantity of said hydrocarbon sol-

vent into the fluid communication path via said injection well and recovering fluids including oil from the formation via said interior production well;

(f) shutting-in the injection well and the interior production well along with the production well to permit said formation to undergo a soak period for a time sufficient for gravity-driven convection to substantially mix the solvent

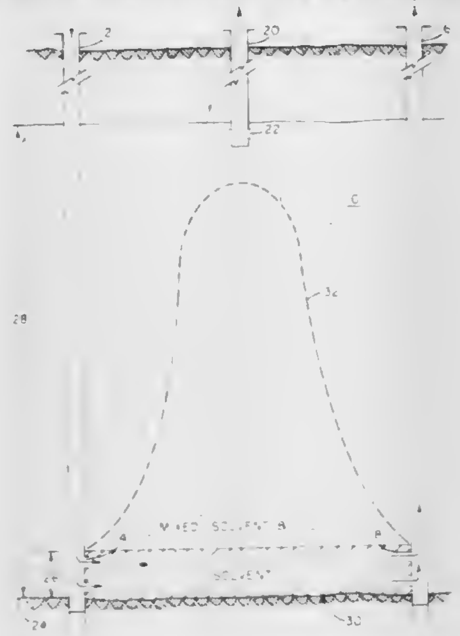

with the oil in the formation and thereby reduce its viscosity; and

(g) thereafter injecting a driving fluid into the formation via said injection well and recovering fluid including oil from the formation via said production well until the fluid being recovered comprises an unfavorable ratio of produced oil to driving fluid.

4,373,587
FLUID DISPLACEMENT WELL SAFETY VALVE
Ronald E. Pringle, Houston, Tex., assignor to Camco, Incorporated, Houston, Tex.
Filed Dec. 8, 1980, Ser. No. 214,069
Int. Cl.³ E21B *34/10*
U.S. Cl. 166—324 **16 Claims**

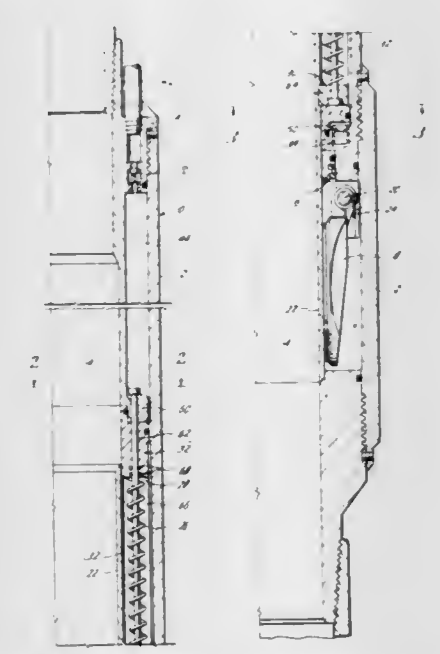

1. A subsurface well safety valve for controlling the fluid flow through a well conduit comprising,
a housing having a bore therethrough,
a valve closure member positioned in the housing movable between open and closed positions in the bore,
a flow tube longitudinally movable in the housing for controlling the movement of the valve closure member,
means for biasing the flow tube in a first direction for causing the valve closure member to move to the open position,
a sealless gas chamber in said housing,
a fluid passageway positioned in the housing and adapted to receive fluid pressure from the well surface for increasing the pressure of the gas in the chamber, said passageway including a time delay restriction limiting fluid flow out of said housing for leaving a compressed gas in the gas chamber after the pressure from the surface is reduced,
piston means in the housing connected to the flow tube, said piston means having a first end exposed to pressure in the passageway on a first side of the restriction, and having a second end exposed to pressure in the passageway on the second side of the restriction and subject to the pressure in the gas chamber whereby when pressure on the first side of the restriction is reduced the compressed gas will act on the fluid on the second side of the restriction to move the piston means in a direction to close the valve.

4,373,588
FIRE EXTINGUISHING APPARATUS
Kenneth T. White, Chicago Heights, and Harold F. Roberts, Hawthorn Woods, both of Ill., assignors to Chemetron Corporation, Chicago, Ill.
Filed Oct. 27, 1980, Ser. No. 200,628
Int. Cl.³ A62C *37/06*
U.S. Cl. 169—19 **5 Claims**

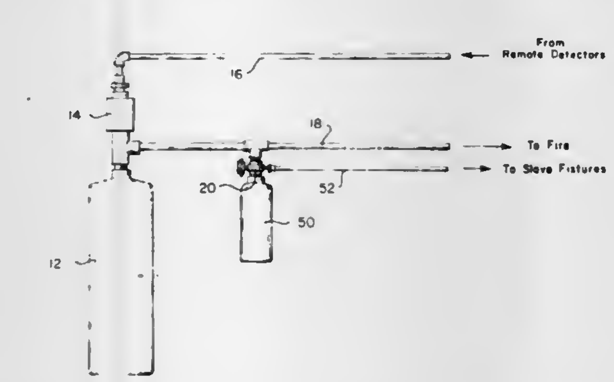

1. An apparatus for pneumatically actuating slave devices in direct response to the discharge of a dry chemical fire extinguishant comprising:
at least one main fire extinguisher containing pressurized dry chemical fire extinguishant,
a main discharge pipe through which the pressurized dry chemical fire extinguishant from the main fire extinguisher passes,
a cartridge containing a pressurized gas supply connected to said main discharge pipe through an actuator valve,
said actuator valve comprising:
a resilient check having a tip portion urged into intimate contact with the valve walls by the pressurized gas supply to prevent said pressurized gas from escaping the actuator valve,
a piston reciprocally mounted in the actuator valve having a head disposed toward the main discharge pipe said head movable in response to pressure in the discharge pipe and fit into the actuator valve at sufficiently close tolerance to minimize gas transfer therethrough, said piston having a base portion facing the tip of the check and integrally connected with the head, such that depression of the piston head into the actuator valve releases the pressurized gas in the pressurized gas supply by forcing the tip of the check from its contact with the valve walls, and
a secondary discharge pipe through which the pressurized gas in the pressurized gas supply is released when the pressure against the piston head is greater than the pressure against the resilient check,
pneumatically responsive slave devices connected to the secondary discharge pipe, and

means for releasing the pressurized dry chemical fire extinguishant in the main fire extinguisher into the main discharge line to create a force in the main discharge line greater than the force against the resilient check.

4,373,589
HARVESTING APPARATUS FOR ONIONS
Yitzchak Hagiz, Givat Shmuel, Israel, assignor to Sharnoa Ltd., Petach Tikva, Israel
Filed Feb. 3, 1981, Ser. No. 231,114
Int. Cl.³ A01D *37/00;* A23N *15/04*
U.S. Cl. 171—31 **7 Claims**

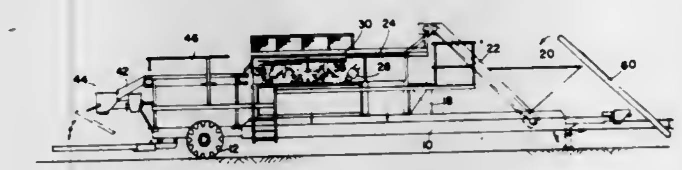

1. Mobile onion harvesting apparatus comprising:
driving means;
a wheeled chassis arranged to be coupled to said driving means;
a produce receiving hopper;
conveyor apparatus for raising produce from said hopper;
precleaning apparatus receiving onions from a conveyor apparatus, said precleaning apparatus including a generally planar array of spaced elements defining interstices therebetween and vibratory means coupled to said array for imparting vibration thereto, thereby to enhance the removal of debris through said interstices; and
trimming apparatus for receiving onions from said conveyor apparatus and trimming off the tops and bottoms of the onions, said trimming apparatus comprising an array of spaced elements, a plurality of rotary blade assemblies disposed thereunder and means for applying vibratory motion to said array with a vibration vector which is inclined upwardly with respect to said array such that trimmed onions are continually repositioned and roll or slide therealong.

4,373,590
TILLING APPARATUS
Michael C. Wittrock, Arvada, Colo., assignor to The Eversman Mfg. Company, Denver, Colo.
Filed Apr. 25, 1980, Ser. No. 143,609
Int. Cl.³ A01B *73/00, 33/02, 33/08*
U.S. Cl. 172—78 **24 Claims**

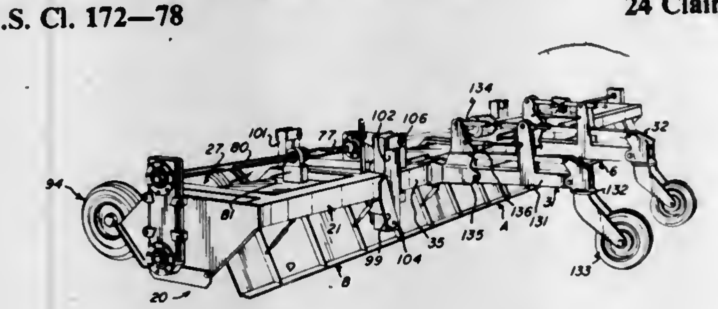

1. In a tilling implement, the combination comprising:
a tilling rotor supported for rotation by a support, said rotor including a rotor shaft and a plurality of axially spaced multiple tine and hub assemblies mounted on said rotor shaft at spaced intervals along said rotor shaft, each said assembly having a plurality of soil-working tines, each with a radially extending shank portion, and hoe portions that alternate to project axially in one direction and axially in the other direction, the hoe portions of adjacent of said assemblies overlapping to cut a width of soil; and
a rotor drive train on said support for transmitting rotary power from a power source to rotate said tilling rotor to work the soil through which said tilling rotor is advanced while rotated, said drive train including a central drive shaft and a cross drive shaft coupled to and extending laterally out from a side of said central drive shaft, said cross drive shaft being above and generally parallel to said rotor and coupled to said rotor shaft by a first coupling, said support, tilling rotor and rotor shaft being constructed as a central section and at least one wing section pivotally connected to a side of the central section to pivot about a first axis to move up and down to adjust to irregular soil contours, said first axis being in substantially the same horizontal plane as the axis of the rotor shaft of said central section to provide a minimum variation in tillage width for each row, said wing section being arranged to swing between a lowered working position and a raised position for transport.

4,373,591
IMPLEMENT AND LAST MOTION HITCH LOCKING MECHANISM THEREFOR
Wayne J. Schaaf, and Bennie J. Boswell, both of Kewanee, Ill., assignors to Chromalloy American Corporation, St. Louis, Mo.
Filed Apr. 10, 1981, Ser. No. 252,850
Int. Cl.³ A01B *59/04*
U.S. Cl. 172—328 **16 Claims**

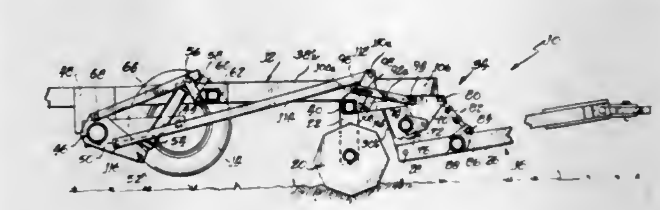

1. In an implement having a frame, a hitch bar pivotally connected to said frame for hinged movement relative to said frame, a rockshaft mounted on said frame for rotation about its longitudinal axis, and wheel means mounted on said rockshaft for movement between a lowered transport position wherein said frame is raised for transport and a raised position wherein said frame is lowered for an operating mode, the combination therewith comprising hitch lock means operatively associated with said wheel means and said hitch bar and adapted to maintain said hitch bar in fixed relation to said frame when said wheel means is in its said lowered position, said hitch lock means being adapted to enable hinged movement of said hitch bar relative to said frame when said wheel means is in its said raised position, said hitch lock means including first lost motion link means operatively associated with said hitch bar and adapted to limit downward hinged movement of said hitch bar to a first predetermined downward position when said wheel means is in its said lowered position while enabling upward hinged movement of said hitch bar to a second predetermined position when said wheel means is in its said raised position, and second lost motion link means interconnected between said wheel means and said hitch bar and adapted to prevent upward hinged movement of said hitch bar from said first predetermined position when said wheel means is in its said lowered position so as to lock said hitch bar in fixed relation to said frame, said first and second lost motion link means being cooperative in response to movement of said wheel means to its said raised position to enable upward and downward hinged movement of said hitch bar relative to said frame between its said first and second predetermined positions.

4,373,592
ROTARY DRILLING DRILL STRING STABILIZER-CUTTINGS GRINDER

Thomas B. Dellinger, Duncanville, and John Kelly, Jr., Arlington, both of Tex., assignors to Mobil Oil Corporation, New York, N.Y.

Filed Nov. 28, 1980, Ser. No. 210,915
Int. Cl.³ E21B *12/00, 17/00*
U.S. Cl. 175—61 **13 Claims**

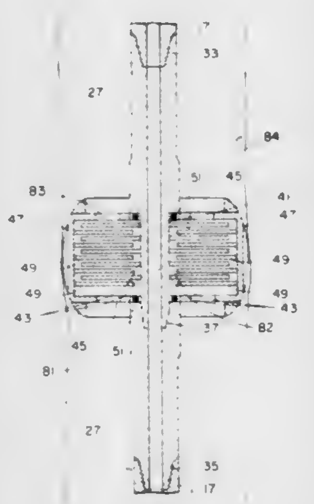

6. In extended reach drilling a wellbore having an inclination from a vertical of at least 60°, a method of rotary drilling a wellbore into the earth in a manner to mitigate differential sticking of a drill string having a drill bit at the lower end thereof, comprising drilling said wellbore by rotating a drill string comprised of sections of drill pipe connected together, and mitigating the tendency of the drill string to differentially stick in the borehole by providing a drill collar just above the drill bit and a stabilizer-grinder at a position just above the drill collar and along the drill string to grind and reduce the size of cuttings generated during the drilling operation.

4,373,593
DRILL BIT

Cornelius Phaal, Rivonia, South Africa, and Rainer Jürgens, Celle, Fed. Rep. of Germany, assignors to Christensen, Inc., Salt Lake City, Utah

Filed Mar. 10, 1980, Ser. No. 128,998
Claims priority, application Fed. Rep. of Germany, Mar. 16, 1979, 2910347
The portion of the term of this patent subsequent to Feb. 24, 1998, has been disclaimed.
Int. Cl.³ E21B *10/46*
U.S. Cl. 175—329 **12 Claims**

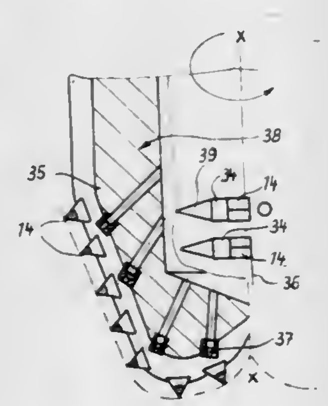

1. A rotary boring bit for boreholes, comprising a body which is provided on its outer periphery with cutting members each of which consist of a supporting portion and a cutting portion disposed on the supporting portion, each cutting member being formed as a wedge shaped cut-out segment of a sintered body with a supporting portion surrounding the cutting portion as a casing at least at the periphery, said cutting portion being a material selected from compacted diamond and compacted cubic boron nitride.

4,373,594
ROTARY DRILL BIT

Thomas R. Barr, P.O. Box 251, Denison, Tex. 75020

Filed Aug. 10, 1981, Ser. No. 291,759
Int. Cl.³ E21B *10/60*
U.S. Cl. 175—393 **4 Claims**

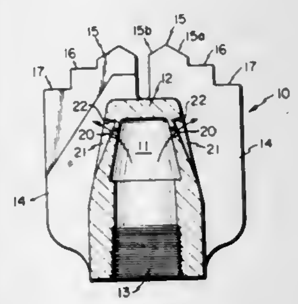

1. A rotary drill bit comprising:
a hollow body having a closed lower end and means on the upper end for securing the body to the lower end of a drill string;
a plurality of outwardly and downwardly extending cutting members on the exterior of and projecting laterally beyond the periphery of said body, said body having a plurality of flow passages, each of said passages opening downwardly and outwardly along a longitudinal axis between each two adjacent cutting members; and
deflecting means formed integrally with and exteriorly of said hollow body between each two adjacent cutting means for deflecting upwardly and away from said flow passages cuttings and the like to avoid plugging said passages during drilling, each longitudinal axis being oriented to direct fluid in a path to avoid contact with said deflecting means to permit unimpeded flow from said passages of all the fluid in said downward direction for cooling and lubricating said cutting members.

4,373,595
Patent Not Issued For This Number

4,373,596
WEIGHING APPARATUS WITH ELECTROMAGNETIC FORCE COMPENSATION

Peter Kunz, Saumstrasse 28, CH-8625 Gossau, Switzerland

Filed Aug. 14, 1981, Ser. No. 292,904
Claims priority, application Switzerland, Aug. 22, 1980, 6339/80
Int. Cl.³ G01G *7/00*
U.S. Cl. 177—212 **7 Claims**

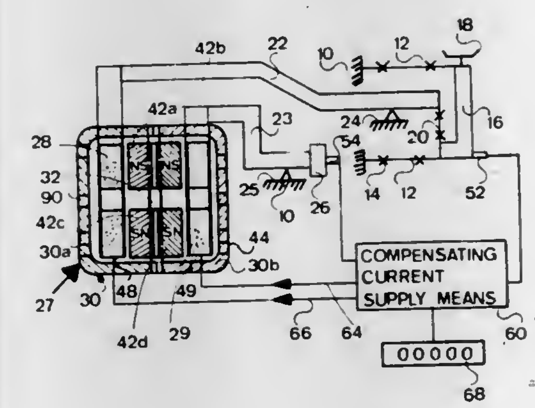

1. In a weighing system of the electromagnetic load compensation type including a frame **(10)**, load receiving means **(16)** movably connected with said frame for vertical displacement from an initial no-load position upon the application of a load thereto, permanent magnet means **(27)** connected with said frame for producing a stationary magnetic field, load coil means **(28)** connected with said load-receiving means for vertical displacement in said magnetic field, reference coil means **(28)** connected with said frame for vertical displacement in said magnetic field from an initial null-position, means **(52)** for generating a load signal responsive to the displacement of said load-receiving means from its initial no-load position, means **(54)** for generating a reference signal responsive to the displacement of said reference coil from its null position, compensation current supply means **(60)** responsive to said load and reference signals for supplying compensating current to said load and reference coils to return the same to their initial no-load and null positions, respectively, and display means **(68)** responsive to said compensating current for affording a visual indication of the magnitude of the applied load;
the improvement wherein said permanent magnetic means comprises
(a) a hollow open-ended horizontally arranged sectional yoke housing including a pair of generally identical soft iron components **(30*a*, 30*b*)**;
(b) a vertical divider wall **(32)** extending longitudinally between the ends of said housing for dividing the chamber contained therein into a pair of air gaps **(48, 49)**; and
(c) at least one first permanent magnet **(42*a*)** mounted within a first opening **(38*a*)** contained in said divider wall, the polar axis of said magnet being normal to said divider wall;
(d) said load and reference coils being arranged in said air gaps on opposite sides of, and parallel with, said divider wall, respectively, whereby the direction of the magnetic flux extending through the lower portions of the coils is opposite to that of the flux extending through the upper portions of the coils.

4,373,597
TRACTOR FOR AGRICULTURE

Hiroshi Itatani, Sakai; Masatsugu Tone, Hashimoto, and Kazuaki Kurohara, Sakai, all of Japan, assignors to Kubota, Ltd., Osaka, Japan

Continuation of Ser. No. 26,157, Apr. 2, 1979, abandoned. This application Feb. 12, 1981, Ser. No. 233,550
Claims priority, application Japan, Aug. 31, 1978, 53/107848
Int. Cl.³ B60K *17/06*
U.S. Cl. 180—70 MS **7 Claims**

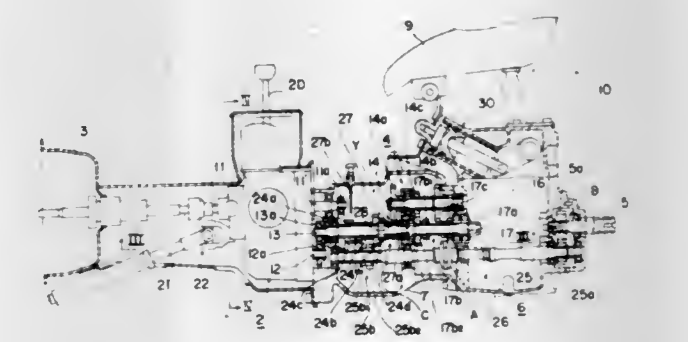

1. A power transmission system for an agricultural tractor comprising:
a hydrostatic stepless speed change device **(2)** disposed rearwardly of a drive engine **(1)** and provided with a pump input shaft **(11)** and a motor output shaft **(12)**, said pump input shaft **(11)** having a forward end portion for receiving power from said drive engine **(1)** and a rear end portion **(11')** extended rearwardly of and through said stepless speed change device **(2)**, and said motor output shaft **(12)** being extended rearwardly of said stepless speed change device **(2)**;
a travelling transmission means **(4)** including a gear type speed change mechanism;
a power take-off transmission means **(6)** operatively connected to said rear end portion **(11')** of said pump input shaft **(11)**; and
a transmission changeover means (C) for causing said travelling transmission means **(4)** to operatively connect selectively to said motor output shaft **(12)** or to said power take-off transmission means **(6)**;
wherein said transmission changeover means (C) is provided upstream of an input portion of said gear type speed change mechanism of said travelling transmission means **(4)**.

4,373,598
AUXILIARY STEERING FOR MOTOR VEHICLES

Dieter Elser, Essingen-Lauterburg, Fed. Rep. of Germany, assignor to Zahnradfabrik Friedrichshafen, AG, Friedrichshafen, Fed. Rep. of Germany

Filed May 7, 1980, Ser. No. 147,602
Int. Cl.³ B62D *5/08*
U.S. Cl. 180—143 **19 Claims**

1. In a power steering device comprising a housing having a valved steering spindle therein comprised of two sections connected by a torsion rod **(6)** for return rotation to a neutral position and wherein one of the sections **(1)** is manually operable and carries a rotary valve plug **(3)** and the other of the sections **(2)** has a valve sleeve **(5)** encompassing and coacting

with said rotary valve plug for flow control to and from pressure chambers (**10, 11**) within said housing, upon relative rotation of said sections, a piston (**13**) in said housing movable between said pressure chambers to activate a steering mechanism, and drive means (W, etc.) intermediate said valve sleeve section and said piston; the improvement residing in road resistance simulating means which comprises: a reaction piston

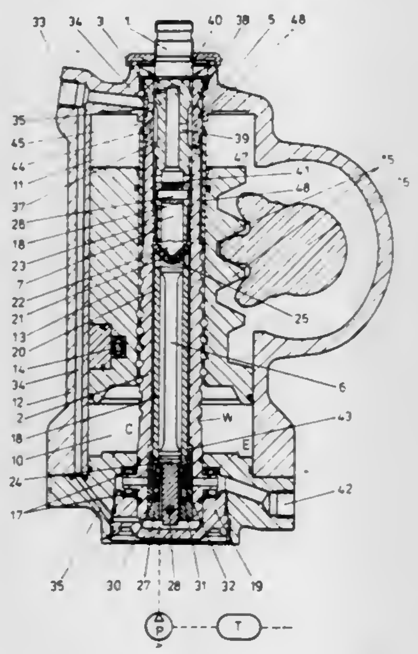

(**20**) encompassing said torsion rod within said valve sleeve section and having an end adjacent an end of said steering spindle and rotation resisting means (**21, 22, 25**) comprising cam means intermediate said adjacent ends; and force means (**30**) acting on said reaction piston in axially spaced relation to said cam means remote from the rotary valve plug for exerting force against said steering spindle through said cam means upon rotation of said steering spindle to resist rotation thereof.

4,373,599
HYDRAULIC RACK STEERING SYSTEM
Wolfgang Walter, and Werner Breitweg, both of Schwabisch Gmund, Fed. Rep. of Germany, assignors to Zahnradfabrik Friedrichshafen, AG., Friedrichshafen, Fed. Rep. of Germany
Filed Mar. 3, 1981, Ser. No. 240,214
Claims priority, application Fed. Rep. of Germany, Mar. 8, 1980, 3009051
Int. Cl.³ B62D *5/10;* **F16J** *15/18*
U.S. Cl. 180—148 **5 Claims**

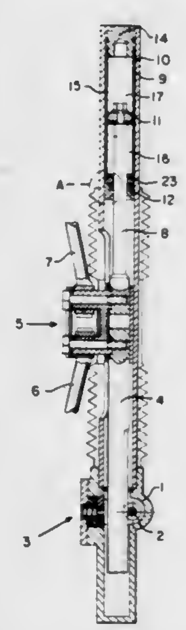

1. A hydraulic rack steering system having a servocylinder with a piston rod therein and being integrally connected to a rack with a pinion for driving the rack wherein said servocylinder comprises pressure chambers with a piston carried on said rod between said pressure chambers and including a seal assembly secured at an end of the servocylinder slidably engaging the piston rod;

the improvement wherein:

the seal assembly has a seal assembly housing (**12**) and within said housing a compressible sealing ring (**22**) surrounding a prestress ring (**21**) surrounding a further compressible sealing ring around a sealing ring of plastic material for engagement with a piston rod;

including a cover ring (**23**) secured within said seal assembly housing for retaining the aforementioned rings axially therein and being disposed with axial clearance (S) from said prestress ring to permit movement of said piston rod to follow bending of said rack under steering stress.

4,373,600
THREE WHEEL DRIVE VEHICLE
Floyd E. Buschbom, Long Lake, and Glen D. Hansen, Maple Plain, both of Minn., assignors to Veda, Inc., Long Lake, Minn.
Filed Jul. 18, 1980, Ser. No. 170,145
Int. Cl.³ B62D *6/06;* **B60K** *7/00*
U.S. Cl. 180—212 **29 Claims**

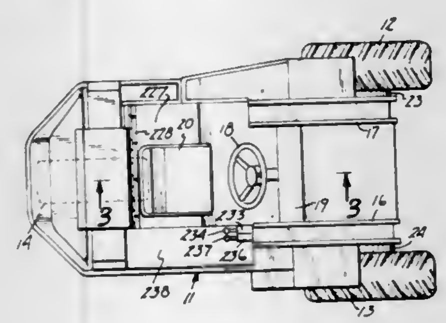

1. A vehicle comprising: a frame having a first portion and second portion, first wheels operatively connected to the first portion of the frame, fluid operated first motors, one of said first motors being drivably connected to one first wheel, the other of said first motors being drivably connected to the other first wheel, second wheel means operatively connected to the second portion of the frame, a fluid operated second motor drivably connected to the second wheel means, a pump assembly having a first pump for supplying fluid under pressure to the first motors, and a second pump for supplying fluid under pressure to the second motor whereby said first motors and second motor concurrently operate to drive the first wheels and second wheel means, means for operating said pump assembly, sub-frame means mounted on the frame, means mounting the pump assembly and means for operating said pump assembly on said sub-frame means, mount means releasably connecting the sub-frame means on the frame whereby the pump assembly, means for operating said pump assembly, and sub-frame means can be removed as a unit from the frame, means for rotatably mounting said second wheel means on said frame for angular movement about a generally upright axis, and means for angularly moving said second wheel means about said upright axis to steer said vehicle.

4,373,601
POWER TRANSMISSION DEVICE OF MOTORCYCLES
Takanori Onda, Kawagoe; Hiroshi Kawasaki, Tokorozawa, and Mitsukuni Misawa, Tokyo, all of Japan, assignors to Honda Giken Kogyo Kabushiki Kaisha, Tokyo, Japan
Filed Sep. 18, 1980, Ser. No. 188,365
Claims priority, application Japan, Sep. 25, 1979, 54-123031
Int. Cl.³ B62M *11/06, 17/00*
U.S. Cl. 180—226 **15 Claims**

1. A power transmission device for a motorcycle having an engine contained in a crank case and a rear wheel driven from the engine, said power transmission device comprising a main transmission case integrally formed with the engine crank case and extending longitudinally rearwards thereof, a main transmission mounted in said main transmission case, a sub-transmission case disposed in part at one side in the transverse direction of said main transmission case, a sub-transmission mounted in said sub-transmission case and drivingly connected to said main transmission, said sub-transmission being disposed at said

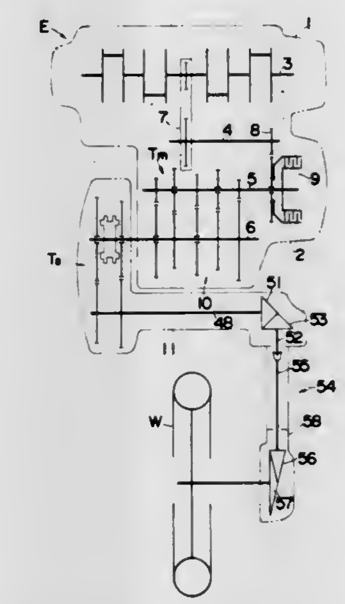

one side in the transverse direction of said main transmission case, and means for drivingly connecting said sub-transmission to the rear wheel of the motorcycle, said means being disposed at the other side in the transverse direction of said main transmission case so that said means and said sub-transmission are transversely offset on opposite sides of said rear wheel.

4,373,602
POWER UNIT SUSPENSION SYSTEM FOR MOTORCYCLES
Takao Tomita, Niiza; Hitoshi Yamamoto, Shiki; Shigenaga Enoki, Wako; Isamu Goto, Kiyose, and Takeshi Hashimoto, Tachikawa, all of Japan, assignors to Honda Giken Kogyo Kabushiki Kaisha, Tokyo, Japan
Filed Mar. 3, 1981, Ser. No. 240,191
Claims priority, application Japan, Mar. 6, 1980, 55-28382; May 30, 1980, 55-72318; Jun. 2, 1980, 55-73852; Jun. 2, 1980, 55-73853
Int. Cl.³ B62K *11/04*
U.S. Cl. 180—227 **18 Claims**

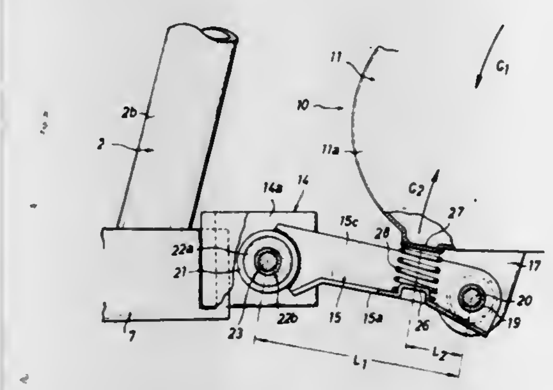

1. In a motorcycle having a vehicle body frame and a power unit including an engine assembled integrally with a transmission and supporting an axle of a rear wheel, a suspension system for said power unit comprising:

link means having an axis in its longitudinal direction extending substantially at right angles to the direction of principal vibratory forces of said engine;

said link means being rotatable about a first pivot means while resiliently resisted, and about a second pivot means spaced apart in said longitudinal direction from said first pivot means;

said first pivot means being secured to said frame and said second pivot means being secured to a first front lower portion of said power unit;

whereby the entire rotational load acting on said power unit about said axle of said rear wheel is substantially converted into a moment of rotation of said link means;

first elastic means provided for said link means to elastically support said power unit, said first elastic means being arranged between an upper portion of said link means and a second front lower portion of said power unit;

said first elastic means being capable of producing a reaction force opposing said rotational load; and

means for supporting a rear portion of said power unit from an upper portion of said frame, said supporting means including shock absorbing means.

4,373,603
AUTOMATIC CRAB STEERING
Carl D. Nelson, Litchfield Park, Ariz., assignor to J. I. Case Company, Racine, Wis.
Filed Mar. 5, 1981, Ser. No. 240,698
Int. Cl.³ B60D *1/14;* **B62D** *9/02*
U.S. Cl. 180—236 **4 Claims**

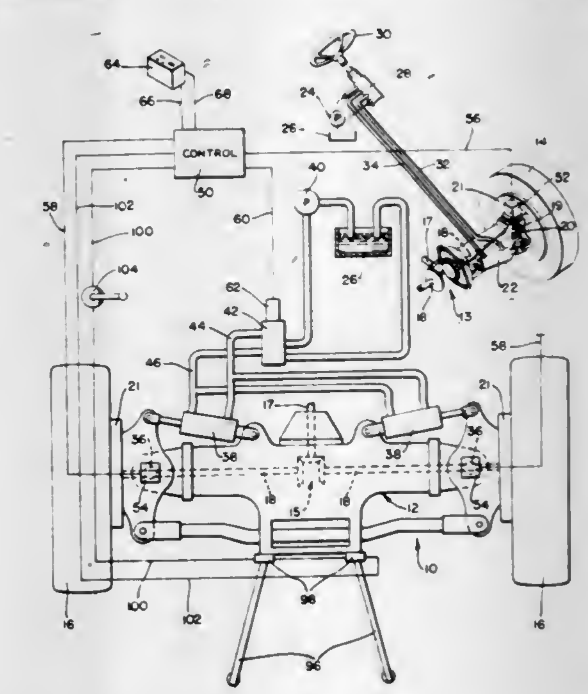

1. A steering system for a tractor including a frame having a pair of front drive wheels and a pair of rear drive wheels;

steering means for controlling turning movements of said drive wheels;

implement draft arms mounted to said frame for connecting an implement to said tractor;

sensing means mounted to said implement draft arms for detecting side draft forces applied to said implement arms by an implement and producing an output signal in response to said side draft forces; and

control means including switch means having a plurality of positions respectively defining different modes of steering and one mode of steering being selectable wherein said drive wheels are automatically turned at equal angles in the same direction so that the longitudinal axis of the tractor moves in a generally sidewise direction, and said control means receiving said output signal and actuating said steering means when said one mode of steering is selected and in response to side draft on said implement draft arms above a predetermined level.

4,373,604
TRANSFER CASE
Royston C. Lunn, Ann Arbor; J. Edwin MacAfee, Grosse Ile; Robert C. Grabowski, Dearborn Heights; Dennis N. Renneker, Troy, and John M. Winkler, Temperance, all of Mich., assignors to American Motors Corporation, Southfield, Mich.
Filed Nov. 13, 1980, Ser. No. 206,338
Int. Cl.³ B60K *17/34*
U.S. Cl. 180—247 **9 Claims**

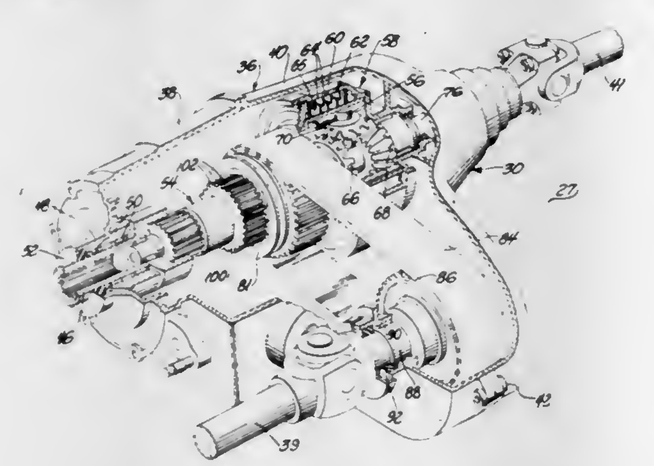

1. A transfer case for a four-wheel drive vehicle including a front axle and a rear axle and having a two-wheel drive mode and a four-wheel drive mode, the transfer case comprising:
a housing;
an input shaft mounted for rotation within the housing and adapted to connect to a source of drive torque;
a first output shaft and a second output shaft, each mounted for rotation within the housing;
coupling means for selectively coupling one axle through the first output shaft to receive drive torque when the vehicle is in its four-wheel drive mode, and not to receive drive torque when in its two-wheel drive mode, and wherein the other axle is coupled through the second output shaft to receive drive torque in either drive mode;
control means responsive to a control signal of a first character to couple the one axle through the first output shaft, and responsive to a control signal of a second character to decouple the one axle from drive torque; and
signaling means responsive to the position of the coupling means to provide a position indicating signal for feedback in controlling the actuation of the coupling means.

4,373,605
GEARLESS HYDRAULIC TRANSMISSION AND VEHICLE DRIVE SYSTEM
Darrel J. Sheppard, Sr., 28751 Delton, Madison Heights, Mich. 48071
Filed Jul. 1, 1980, Ser. No. 165,211
Int. Cl.³ B60K *17/10*
U.S. Cl. 180—308 **19 Claims**

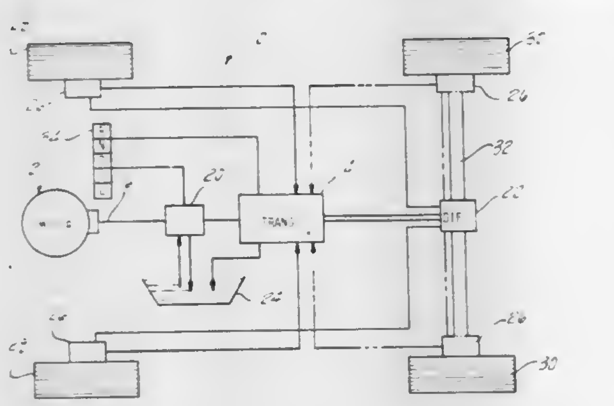

1. In a vehicle having an engine with an output shaft, an accelerator to control said engine, and at least one driven wheel, a hydraulic device for selectively varying the torque output from the output shaft of said engine to said driven wheel, said device comprising:
a hydraulic fluid reservoir;
a torque motor operatively connected to said at least one driven wheel;
a hydraulic pump driven by said output shaft and drawing fluid from said reservoir to provide fluid at high pressure; and
fluid circuit means fluidly communicating said fluid at high pressure from said pump to said torque motor and returning to said reservoir to drive said at least one driven wheel and return, said circuit means having:
means positively controlled by said accelerator for selectively admitting fluid at high pressure from said pump to said torque motor,
first means for varying the flow rate of said fluid between said torque motor and said admitting means thereby changing the torque applied to said driven wheel;
means for recirculating fluid to said torque motor without returning to said reservoir when fluid is not selectively admitted to said circuit means; and means disposed in said recirculating means for selectively restricting the flow of fluid recirculating to said torque motor.

4,373,606
LOUDSPEAKER ENCLOSURE AND PROCESS FOR GENERATING SOUND RADIATION
Philip R. Clements, 8710-R, Park La., Dallas, Tex. 75231, and Donald R. Smith, 4044 Buena Vista, #215, Dallas, Tex. 75204
Filed Dec. 31, 1979, Ser. No. 108,371
Int. Cl.³ H05K *5/00*
U.S. Cl. 181—151 **27 Claims**

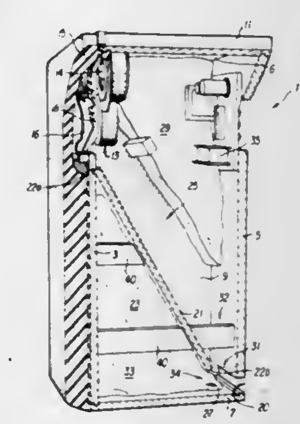

1. An improved loudspeaker enclosure for generating sound radiation in a room having a floor and a wall comprising;
a. a loudspeaker acoustically mounted therein for generating sound radiation, said loudspeaker having a rear piston radiating area of x;
b. a wall including a sound transmission port having a cross sectional area of between .3x and .65x for forming a sound radiation structure in combination with the room floor and room wall;
c. a bottom wall;
d. a tuned acoustical chamber for selectively absorbing sound radiation of the fundamental and even and odd harmonics of the system resonance frequency of the enclosure, said acoustical chamber including a sound radiation entrance port having a cross sectional area of y;
e. a compression chamber which is acoustically coupled to said rear piston radiation area of said loudspeaker, said chamber having a throat having a cross sectional area substantially equal to or less than x, and
f. an acoustical coupling for coupling said compression chamber throat with said sound transmission port and said sound radiation entrance port of said tuned acoustical chamber, said coupling having a top including said compression chamber throat, a bottom including said bottom enclosure wall, and a side including said transmission port.

4,373,607
LOUDSPEAKER CONE STIFFENERS
Charles D. Miller, P.O. Box 790126, Dallas, Tex. 75379
Continuation-in-part of Ser. No. 63,379, Aug. 3, 1979, abandoned. This application Jun. 25, 1981, Ser. No. 276,810
Int. Cl.³ H04R *7/00*
U.S. Cl. 181—166 **12 Claims**

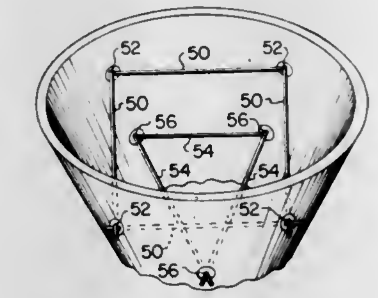

1. An improved loudspeaker comprising:
a generally conical diaphragm,
acoustic driving means coupled to a small end of said diaphragm, and
a plurality of stiffener columns positioned in a plane essentially perpendicular to a central axis of said diaphragm and said columns having ends attached to said diaphragm intermediate said small end and a large end of said diaphragm, wherein said plurality of columns is positioned end to end to form a polygon.

4,373,608
TUNED SOUND BARRIERS
David G. Holmes, Schenectady, N.Y., assignor to General Electric Company, Schenectady, N.Y.
Filed Dec. 20, 1979, Ser. No. 105,599
Int. Cl.³ H02K *5/24;* F16F *7/00;* G10K *11/16;* H01F *15/02*
U.S. Cl. 181—202 **13 Claims**

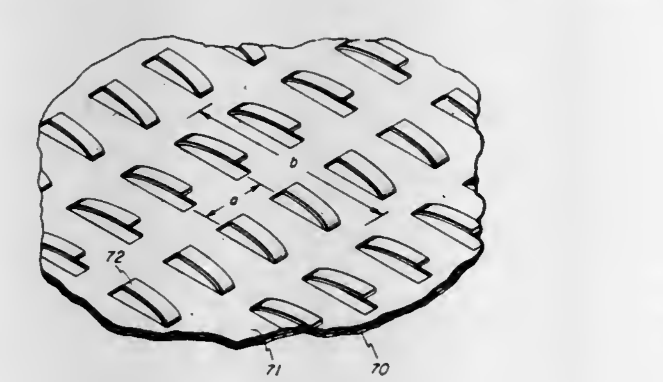

1. A tuned sound barrier for reducing the noise emitted by a vibrating source comprising:
a barrier sheet disposed adjacent said source; and
a plurality of resonators attached to and uniformly distributed over a major surface of said sheet; each one of said plurality of resonators being tuned to present to said barrier sheet a large mechanical impedance to vibratory motion of said barrier sheet at a specific frequency emitted by said source.

4,373,609
STAIRWAY STRINGERS CONSTRUCTED OF CAST, READILY-ASSEMBLED UNITS
Victor De Donato, 30 LeMoyne Ave., Pittsburgh, Pa. 15228
Filed Dec. 22, 1980, Ser. No. 218,939
Int. Cl.³ E04F *11/00*
U.S. Cl. 182—178 **10 Claims**

1. A readily-assembled stringer for constructing a stairway wherein the stringer is formed of a plurality of cast units assembled in a continuous, stepped relationship, each unit comprised of first and second arms and an intermediate member, each of said arms having an end integral with the intermediate member and a free end, said arms being substantially parallel and extending in the same direction and at substantially right angles from the intermediate member, said first arm having a recessed section open at the end of the arm integral with the intermedi-

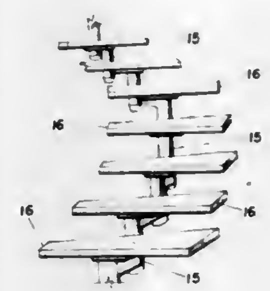

ate member for snugly receiving the free end of the second arm of a first adjacent unit, said free end of the second arm being adapted to be snugly inserted in the recessed section of the first arm of a second adjacent unit, and means for securely fastening together the first and second arms of adjacent units.

4,373,610
SPEED CONTROL APPARATUS FOR ELEVATOR
Toshiaki Ishii, Inazawa, Japan, assignor to Mitsubishi Denki Kabushiki Kaisha, Tokyo, Japan
Filed May 15, 1981, Ser. No. 264,167
Claims priority, application Japan, May 28, 1980, 55-71267
Int. Cl.³ B66B *1/30*
U.S. Cl. 187—29 R **6 Claims**

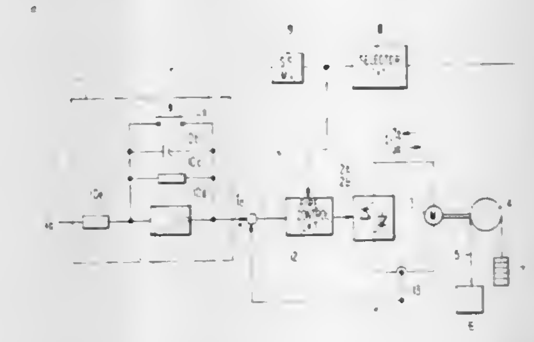

1. A speed control apparatus for an elevator comprising: dual thyristor converters for converting A.C. electrical power into D.C. electrical power supplied to a D.C. motor driving an elevator car, said converters forming a non-circulating static Leonard device, a selector circuit (8) for producing a selection signal for switching between said dual thyristor converters to reverse the direction of current flowing to said D.C. motor, a signal generating circuit (9) for producing a signal in response to said selection signal, a current command changing circuit (10) for changing a current command signal based on the difference between a speed command signal for said elevator car and a signal proportional to the actual speed of said car in response to a signal from said signal generating circuit, and a firing angle control circuit (12) for generating a signal for controlling the firing angle of the converter thyristors as a function of the difference between a signal from said current command changing circuit and a detected current value of said D.C. motor, and a selection signal from said selector circuit, said current command changing circuit comprising an amplifier, and a filter circuit connected across said amplifier and formed by a resistor, a capacitor and resetting means connected in parallel, said resetting means functioning to reset said filter circuit in response to a signal from said signal generating circuit, said current command changing circuit serving to initially reduce the difference between the actual and commanded motor currents during transient switching periods of operation, and to thereafter limit the rate of change of said

commanded motor current, and said signal generating circuit comprising a single pulse generator for producing a signal whose width is proportional to a time constant determined by the resistance and capacitance of said filter circuit, and which is of sufficient duration to enable the discharge of said capacitor.

4,373,611

CONVEYOR TO INTERFIT WITH A LOADED SHOPPING CART AND TO MOVE PORTIONS OF THE LOAD, ON DEMAND OF A CHECKER, TO THE FRONT OF THE CART, FOR REMOVAL, PRICE SCANNING, AND BAGGING, BY THE CHECKER AT A CHECKOUT STAND

Roderick J. Frederick, 1205 6th Ave. S., Seattle, Wash. 98134
Filed Oct. 1, 1980, Ser. No. 192,931
Int. Cl.³ A47B *46/00*
U.S. Cl. 186—64 47 Claims

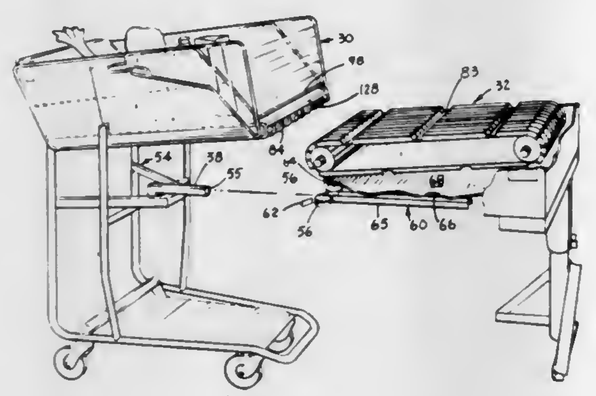

1. In combination for installation and use in a market, a grocery cart for customers to load with their selected groceries, an unloading conveyor, sequentially and temporarily interfitted with arriving grocery carts, located immediately adjacent to a checkout stand, and operated by a checker to move the selected groceries to the front of the grocery cart to be conveniently picked up by the checker, and a checkout stand located nearby the end of the unloading conveyor, and related pricing, and money changing equipment, located within a convenient distance of the checker's sole location, comprising:

(a) a grocery cart having a basket with a bottom of equally spaced longitudinal members sloping upwardly and forwardly such that the forward portion of the bottom of the basket is raised slightly above the rear portion of the bottom of the basket and the longitudinal members define a plurality of parallel continuous unobstructed passages from rear to front along the bottom of the basket;

(b) an unloading conveyor having equally spaced longitudinal ribs adapted to extend up through and along the parallel unobstructed passages alongside the equally spaced longitudinal members of the bottom of the basket of the grocery cart, and which slope in a complimentary fashion parallel to the slope of the bottom of the basket at such an elevation that the ribs will pass through the parallel passages when the basket of the cart is positioned over the conveyor;

(c) the checkout stand positioned immediately adjacent the unloading conveyor, for receiving groceries just after they are removed from the basket, where the groceries have been moved forward, while resting upon the equally spaced longitudinal ribs of the conveyor belt; and

(d) the spaced longitudinal members forming the bottom of the basket being upturned at their forward ends to provide clearance above the longitudinal ribs and being transversely joined together at their ends by a cross member, such that the longitudinal ribs of the conveyor can readily pass beneath the cross member without interference.

4,373,612

ELEVATOR SYSTEM

William R. Caputo, Wyckoff, and Alan L. Husson, Hackettstown, both of N.J., assignors to Westinghouse Electric Corp., Pittsburgh, Pa.
Filed Nov. 25, 1980, Ser. No. 210,439
Int. Cl.³ B66B *1/30*
U.S. Cl. 187—29 R 6 Claims

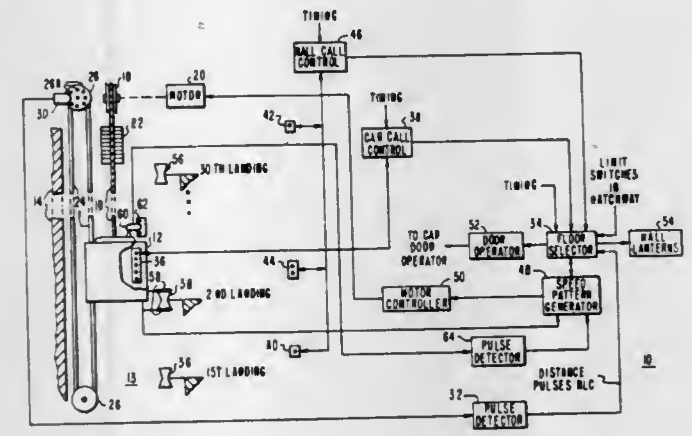

1. An elevator system, comprising:
a structure having a plurality of floors,
an elevator car mounted for movement in said structure to serve the floors,
motive means for causing said elevator car to make a run and stop at a target floor,
control means for said motive means, including speed pattern means for providing a speed pattern indicative of the desired speed of the elevator car during at least a portion of a run, and floor selector means,
said speed pattern means including first speed pattern means providing a running speed pattern which increases its magnitude from zero to a constant value to control the speed of the elevator car when the elevator car is to make a run and accelerate towards a predetermined constant velocity,
said floor selector means providing a slowdown signal when said elevator car reaches a predetermined distance from a target floor during a run,
said speed pattern means additionally including second speed pattern means providing a slowdown speed pattern in response to the issuance of said slowdown signal,
said first speed pattern means including:
(a) means providing a first deceleration signal in response to said slowdown signal,
(b) means responsive to said first deceleration signal which reduces the rate of change of the running speed pattern to zero, if its rate of change is not already zero when said slowdown signal is provided,
(c) first comparator means providing a second deceleration signal in response to a first predetermined relationship between said running and said slowdown speed patterns,
(d) means responsive to said second deceleration signal which reduces the magnitude of said running speed pattern at a predetermined constant rate of change, which rate is less than the predetermined constant rate of change of said slowdown speed pattern, and
(e) second comparator means providing a transfer signal in response to a second predetermined relationship between said running and said slowdown speed patterns,
(f) and transfer means substituting said slowdown speed pattern for said running speed pattern in response to the issuance of said transfer signal, with said slowdown speed pattern controlling the speed of said elevator car following said substitution.

4,373,613

VEHICLE BRAKE EQUIPMENT

Cecil W. West, Caerphilly, Wales, assignor to Coal Industry (Patents) Limited, London, England
Filed Feb. 24, 1981, Ser. No. 237,570
Claims priority, application United Kingdom, May 9, 1980, 8015448
Int. Cl.³ B61H *7/12*
U.S. Cl. 188—43 13 Claims

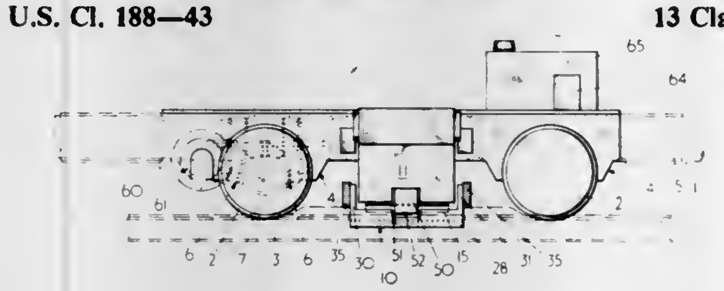

1. Vehicle brake equipment for a vehicle adapted to travel along a stationary rail, comprising a body component adapted to be mounted on the vehicle, brake means having a brake applied mode in which a brake member is urged towards the stationary rail with braking effort, and a brake release mode in which the brake member is not urged towards the stationary rail with braking effort, means for applying the braking effort to the brake member when, in use, the brake is applied, movable reaction means having one operational mode in which a reaction brake member is located on the opposite side of the stationary rail to said brake member and having a second operational mode in which the reaction brake member is clear of the stationary rail, drive means for urging the reaction brake member towards said one operational mode, and abutment means which are arrangeable to abut a stationary formation located along a section of the vehicle path and which when abutting the formation are arranged to override the action of the drive means to urge the reaction brake member towards said second operational mode in which the reaction brake member is clear of the stationary rail.

4,373,614

DISC BRAKE ASSEMBLY

Dean E. Runkle, LaPorte, Ind., assignor to The Bendix Corporation, Southfield, Mich.
Filed Mar. 27, 1981, Ser. No. 248,652
Int. Cl.³ F16D *55/224*
U.S. Cl. 188—72.3 9 Claims

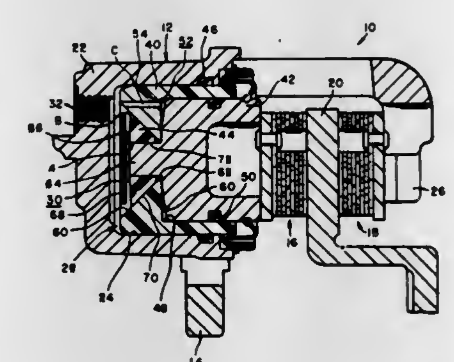

1. In a disc brake assembly having a pair of friction pads which cooperate with a caliper assembly to retard rotation of a rotor during braking, the caliper assembly defining a bore for receiving a piston assembly to substantially define a pressure chamber for receiving fluid pressure during braking, characterized by said piston assembly comprising a pair of pistons, said pair of pistons being movable relative to each other during braking and also during termination of braking, said pair of pistons cooperating to substantially define an auxiliary pressure chamber therebetween for receiving fluid pressure during braking and also cooperating to carry a resilient member therebetween, said resilient member cooperating with the fluid pressure within said auxiliary pressure chamber to substantially control the relative movement between said pair of pistons, a first seal cooperates with said pair of pistons to develop a first friction force when one of said pair of pistons is movable relative to the other piston a second seal cooperates with said other piston to develop a second friction force when said other piston is movable relative to said caliper assembly, and said first friction force is less than said second friction force.

4,373,615

LAMINATED DISC BRAKE PAD ASSEMBLY

Wolfgang Melinat, Dayton, Ohio, assignor to General Motors Corporation, Detroit, Mich.
Filed Jan. 26, 1981, Ser. No. 228,707
Int. Cl.³ F16D *65/02, 69/02, 69/04*
U.S. Cl. 188—73.1 2 Claims

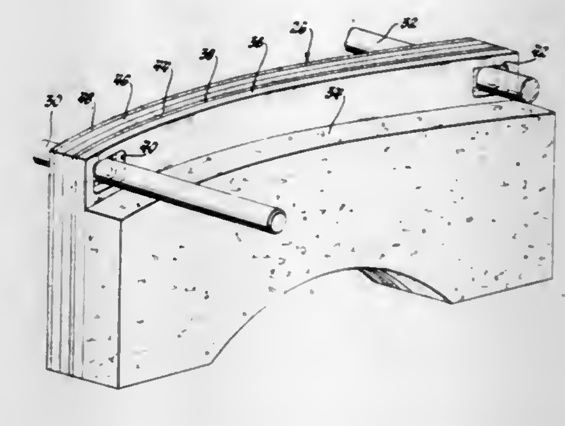

2. A disc brake lining noise suppression system including a brake shoe and lining assembly comprising:
a first assembly section defined by a first brake shoe, a brake lining pad and a heat barrier secured together;
a second assembly section including a second brake shoe;
a rubber-like compound attached to and joining said first and second assembly sections and allowing said first assembly section to vibrate laterally and longitudinally relative to said second assembly section during brake application;
and mounting means mounting said shoe and lining assembly in a disc brake caliper and retaining said second assembly section against lateral and longitudinal vibration relative to the disc brake caliper while permitting lateral and longitudinal vibration of said first assembly section.

4,373,616

DISC BRAKES

Toshio Kondo, Toyota, Japan, assignor to Aisin Seiki Kabushiki Kaisha, Kariya, Japan
Continuation of Ser. No. 78,154, Sep. 24, 1979, abandoned. This application Jan. 26, 1981, Ser. No. 228,186
Claims priority, application Japan, Sep. 28, 1978, 53-119609
Int. Cl.³ F16D *55/224*
U.S. Cl. 188—73.45 2 Claims

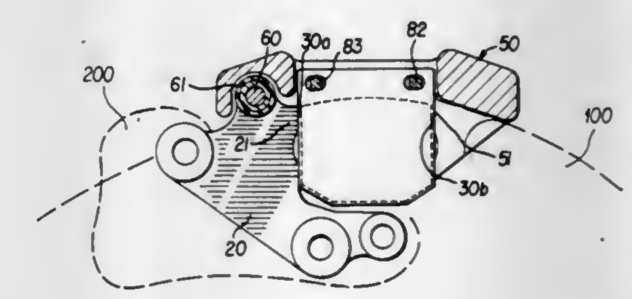

1. A disc brake assembly for a wheel of a vehicle having a non-rotatable part comprising:
a rotatable disc plate secured to said wheel for unitary rotation therewith;

first and second friction pads for frictional engagement with a first and second side of said rotatable disc plate, respectively;

an adapter secured to said non-rotatable part of the vehicle, said adapter including a base portion extending in the radial direction with respect to said disc and being secured to said non-rotatable part of said vehicle by bolts, said adapter further including a first arm portion including a first hole, said adapter further including a second arm portion including a second hole;

caliper means including an opening for allowing said pads to pass therethrough and a fluid actuator disposed therein for moving said first and second friction pads into engagement with said disc plate, said caliper means being movably supported by said adapter and said pads being supported by said caliper means via supporting members extending therebetween, wherein said caliper means includes a cylinder portion, a reaction portion and two connecting portions at the top of said caliper means and connecting said cylinder portion and said reaction portion; wherein one of said connecting portions is provided with a recess opening to the outer circumferential surface of said disc, and wherein a second of said connecting portions is quadrilateral in section and is farther from said non-rotatable part of said vehicle than is said one of said connecting portions;

caliper supporting means secured to said caliper means and slidably supported by said adapter for guiding movement of said caliper means, said caliper supporting means comprising a pair of pins, one of said pins being positioned in, and protected by, said recess of said one of said connecting portions and in said first hole, the second of said pins being positioned radially below said cylinder portion of said caliper means and in said second hole;

said friction pads contacting said adapter at a first end portion thereof and directly contacting said caliper at a second end portion thereof opposite said first end portion, said second end portion comprising said first arm portion, to thereby receive braking torque exerted under a vehicle forward movement condition directly by said adapter and to receive braking torque exerted under a vehicle reverse movement condition by said caliper and said caliper supporting means.

4,373,617

CONTROLLED SLIP TORQUE CONVERTER CLUTCH

Thomas P. Mathues, Miamisburg, Ohio, assignor to General Motors Corporation, Detroit, Mich.

Filed Jun. 1, 1981, Ser. No. 269,344

Int. Cl.³ F16D *43/06*

U.S. Cl. 192—3.31 **4 Claims**

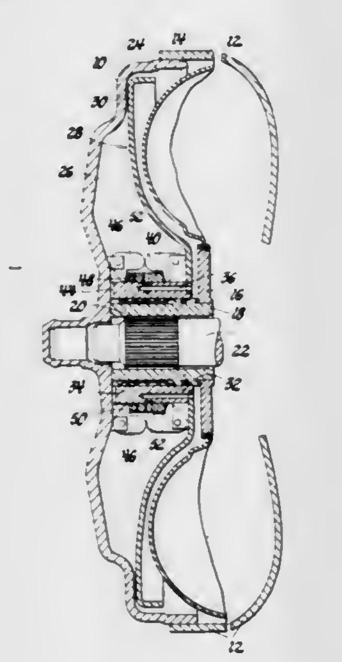

1. A control for a slipping clutch and torque converter drive comprising; an engagement chamber for said slipping clutch; a disengagement chamber for said slipping clutch; means for directing fluid to said engagement chamber and from said disengagement chamber; valve means disposed adjacent said slipping clutch for controlling fluid communication from said engagement chamber to said disengagement chamber; output speed sensitive control means rotatable with said slipping clutch and operating on said valve means to increase the fluid communication with increasing rotary speed of said slipping clutch thereby reducing the torque capacity of the slipping clutch and increasing the speed differential in said torque converter; and input speed sensitive control means rotatable with the input of said torque converter and operating on said valve means to decrease the fluid communication with increasing rotary speed of the input thereby increasing the torque capacity and decreasing the speed differential in said torque converter, said input and output speed sensitive control means interacting to maintain the slipping clutch slippingly engaged so that the slipping clutch and the torque converter share in the torque transmitted.

4,373,618

REVERSE SPEED SHIFT DEVICE FOR A MOTOR VEHICLE CHANGE-SPEED GEARBOX

Gustav Sabel, Cologne, Fed. Rep. of Germany, assignor to Ford Motor Company, Dearborn, Mich.

Filed Jun. 17, 1980, Ser. No. 160,410

Claims priority, application Fed. Rep. of Germany, Aug. 21, 1979, 2933719

Int. Cl.³ B60K *41/20*

U.S. Cl. 192—4 B **2 Claims**

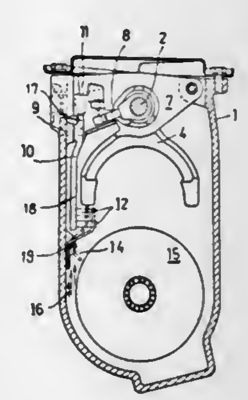

1. A reverse speed shift device for a change-speed gearbox having an after-running shaft and a selector shaft with a selector finger extending therefrom comprising:

a pivotably mounted check plate partially supported by the selector finger to cause rotation of the check plate as the selector finger is moved;

a pivotably mounted lever having first and second arms, the first arm being engageable by the check plate upon movement of the selector finger into the position for reverse gear engagement;

a pumping device mounted on the after-running shaft adapted to produce an oil stream flowing within the gearbox; and

a pivotably mounted baffle plate engaged by the second arm of the lever, the baffle plate being moveable from a rest position at which the flow of the oil stream is substantially unobstructed to a braking position at which the oil stream flow is substantially obstructed as the lever is pivoted upon engagement by the check plate through operation of the selector shaft whereby the over-running shaft is braked as the oil stream is obstructed.

4,373,619

TRANSMISSION CONTROL SYSTEM

Renaldo F. Schritt, Bothell, and Martin J. Kenney, Redmond, both of Wash., assignors to Grad-Line, Inc., Woodinville, Wash.

Filed Apr. 7, 1980, Ser. No. 121,890

Int. Cl.³ B60K *41/06, 41/28*

U.S. Cl. 192—0.09 **8 Claims**

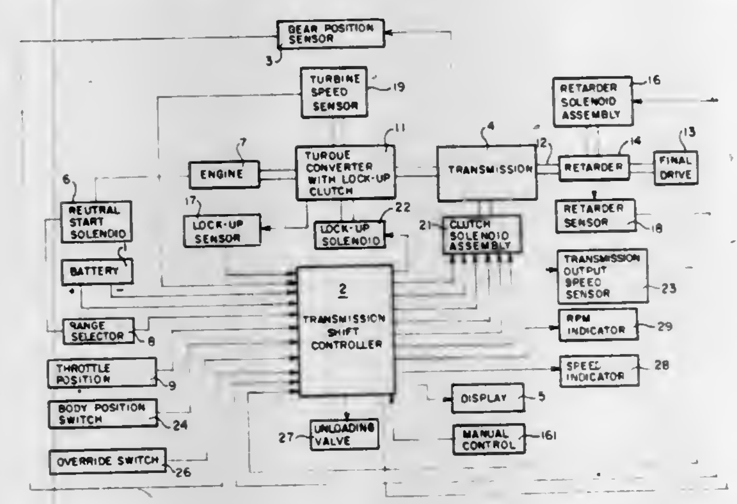

1. A control system for a multi-speed shiftable transmission, said transmission including a selectively operable speed range selector means for selecting a plurality of speed ranges, said plurality of speed ranges including a reverse speed range, a neutral range, and a plurality of forward speed ranges, a plurality of clutches selectively operable to provide different transmission output speed ranges, a transmission output shaft, and a torque convertor having a turbine and a lockup clutch therein, comprising:

first sensing means providing input signals indicative of a selected speed range for said transmission;

second sensing means providing input signals indicative of the actual speed range of said transmission;

third sensing means providing input signals indicative of the rotational speed of said turbine;

fourth sensing means providing input signals indicative of the rotational speed of said transmission output shaft;

means selectively actuating said plurality of clutches to shift transmission output speed ranges;

means for limiting the rotational speed of said transmission output shaft to a speed less than a predetermined speed;

means providing signals to selectively engage said lockup clutch to lock said torque convertor for direct drive; and

control means responsive to said input signals for providing control signals to actuate said lockup clutch and said plurality of clutches according to preset conditions to effect shifting of said transmission to said selected speed range, said control means including digital computing means and encoding means for connecting said input signals to said digital computing means, and means for inhibiting shifting when said lockup clutch locks said torque convertor for direct drive and means for inhibiting shifting when said means for limiting the rotational speed of said transmission output shaft is engaged.

4,373,620

ELASTOMERIC ENERGIZER FOR SPRAG CLUTCH

T. F. Zlotek, Warren, Mich., assignor to Dana Corporation, Toledo, Ohio

Filed Oct. 26, 1979, Ser. No. 88,449

Int. Cl.³ F16D *15/00, 41/07*

U.S. Cl. 192—41 A **8 Claims**

1. In a sprag clutch assembly including a pluralty of circumferentially spaced sprags, each sprag having a groove in at least one side thereof, the groove of each sprag being in alignment with the groove of each adjacent sprag, wherein the grooves define an annular recess in the pluralty of sprags in a plane perpendicular to the rotational axis of the sprag clutch assembly, an improvement comprising a sprag energizer of elastomeric material contained within said recess, said energizer being non-integrally molded with respect to said sprags, said energizer being of relative dimension as to occupy less than the

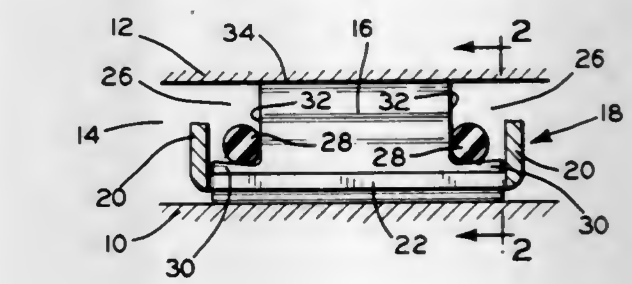

total volume of each groove, said energizer forming a band of resilient frictional contact over less than the total surface area of each groove, whereby said individual sprags do not apply bending moments to said energizer.

4,373,621

DRIVE MECHANISM EMPLOYING WRAPPED-SPRING CLUTCH AS RADIAL LOAD-BEARING MEANS

George A. Hellmer, 212 Thomas Ave., Maquoketa, Iowa 52060

Filed Nov. 7, 1980, Ser. No. 204,742

Int. Cl.³ F16D *13/02, 13/08*

U.S. Cl. 192—81 C **5 Claims**

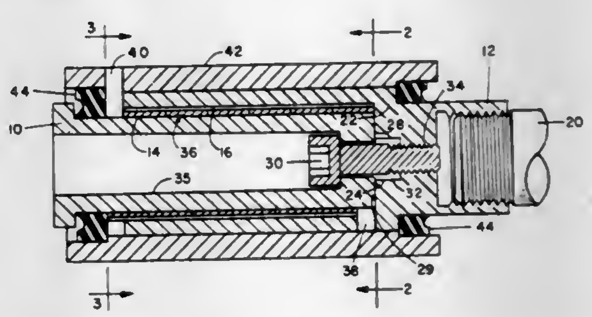

1. An externally-controlled, wrapped-spring clutch mechanism including a first rotatable member having an axially elongated cylindrical outer surface, a second rotatable member having an axially elongated cylindrical inner surface loosely telescoped over the first member outer surface so as to provide an axially elongated annular space between the two surfaces, a control element externally of and coaxial with the members, a coiled clutch spring contained within the annular space and wrapped around the first member and pre-loaded into engagement with the first member outer surface whereby one member drives the other, and said spring having axially opposite ends one of which is connected to the second member and the other of which is connected to the control element whereby the control element is selectively operative to relax the spring to discontinue drive between the members for enabling free relative rotation of the members, characterized in that the entire outer surface is formed as a minimum-friction bearing surface and the entire inner surface of the spring is formed as a minimum-friction helical bearing surface cooperative with the outer surface bearing area to freely inter-journal the two members for relative rotation when the control element is operated to relax the spring, said bearing surfaces comprising the sole radially-effective inter-journalling means between the members.

4,373,622
FLOATING MANIFOLD
Richard A. Michael, Waterloo, Iowa, assignor to Deere & Company, Moline, Ill.
Filed Oct. 27, 1980, Ser. No. 200,858
Int. Cl.³ F16D *25/06;* **F16L** *27/02*
U.S. Cl. 192—85 AA **6 Claims**

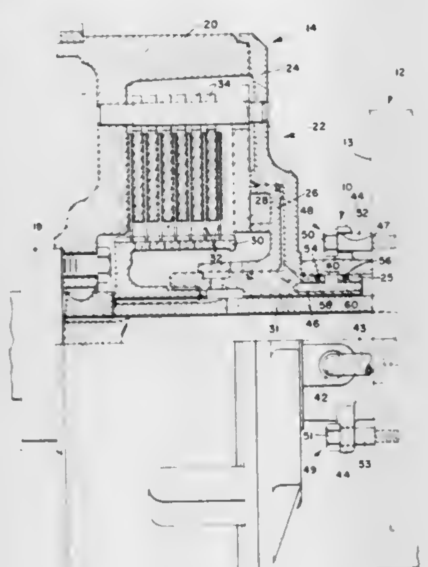

3. In combination with a stationary member, a rotatable clutch secured to a rotatable flywheel, a full annular piston enclosed in said clutch cover, said clutch comprising a rotatable clutch cover with an outward extending lip, a pressure plate indirectly connected to multiple clutch discs and actuated by said full annular piston, and a floating manifold positioned between said stationary member and said rotatable clutch, said floating manifold comprising:
(a) a circular collar annularly positioned on said outward extending lip of said rotatable clutch;
(b) passage means extending radially into said collar for conveying a hydraulic oil between said stationary member and said annular piston; and
(c) latching tongues mounted to the outer periphery of said circular collar capable of juxtapositioning said collar to said stationary member, said latching tongues limiting rotational movement in one direction of said circular collar on said outward extending lip while permitting limited axial movement of said circular collar on said outward extending lip relative to said stationary member.

4,373,623
SILO DISCHARGE CHUTE
George B. Bruecker, Rte. 1, Greenleaf, Wis. 54126
Filed Apr. 2, 1981, Ser. No. 250,456
Int. Cl.³ B65G *11/02*
U.S. Cl. 193—14 **12 Claims**

1. In silo discharge chute forming means comprising:
A. at least one inwardly bowed door for straddling an upright opening in the wall of a silo; and
B. support means to removably support each door astride said opening;
the improvements wherein:
C. each door comprises at least two vertically divided segments having a combined width greater than the width of said opening and an individual width less than the width of said opening; and
D. said support means for each door comprises a vertically registered pair of normally horizontally supported U-shaped members, each member having a pair of legs for pivotal attachment to said wall on each side of said opening and a bight normally extending radially inward and pivotally retractable radially outward through said opening, and fastening means fixed to the upper and lower ends

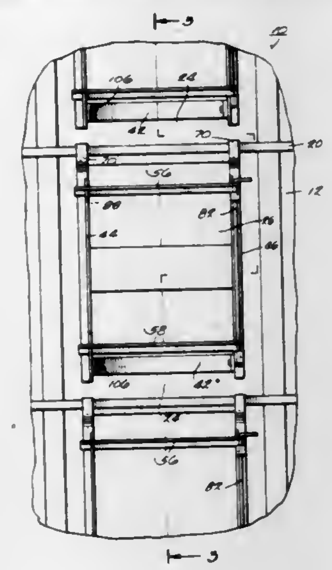

of each door to engage the bights of said pair of U-shaped members.

4,373,624
CIGARETTE CONVEYOR SYSTEMS
Desmond W. Molins; Dennis Hinchcliffe; Frank Heybourn, and Raymond G. Coyte, all of London, England, assignors to Molins Limited, London, England
Division of Ser. No. 865,212, Dec. 28, 1977, Pat. No. 4,280,611, which is a continuation-in-part of Ser. No. 633,714, Nov. 20, 1975, abandoned. This application Mar. 18, 1981, Ser. No. 245,160
Claims priority, application United Kingdom, Nov. 27, 1974, 51321/74
Int. Cl.³ B65G *1/00*
U.S. Cl. 198—347 **11 Claims**

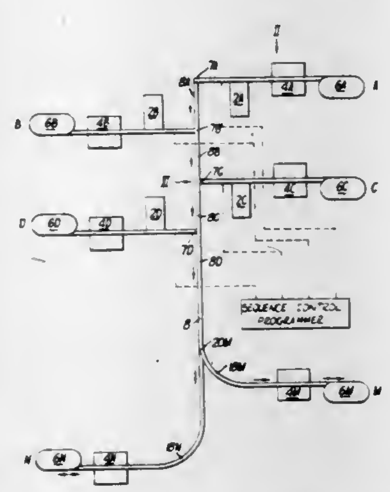

1. A cigarette making system including a number of units each comprising a cigarette making machine, a cigarette packing machine, a reservoir which accommodates differences between the rates of cigarette supply and demand, and linking conveyor means for connecting said cigarette making machine to said cigarette packing machine and said reservoir within the unit characterized in that the output of the cigarette making machine in each unit is greater than that of the associated packing machine, and that the system includes an additional packing machine which is not directly associated with a making machine, and additional transfer conveyor means which communicates with each of said linking conveyor means in said units for deliverying surplus cigarettes from the cigarette making machines to the additional packing machine.

4,373,625
DOUBLE-WALLED ROTARY TUBULAR CONVEYOR WITH STABILIZING DRIVE MEANS
Ronald S. Parsons, 15 Fieldhedge Dr., Somerville, N.J. 08876
Filed Sep. 30, 1980, Ser. No. 192,484
Int. Cl.³ B65G *17/00*
U.S. Cl. 198—804 **7 Claims**

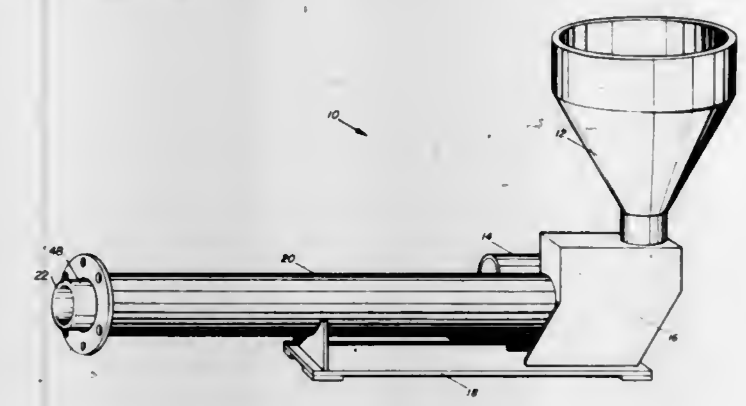

7. A tubular conveyor apparatus comprising:
a first double-walled rotary tubular driven conveyor including at least a first drive means therefor, said first conveyor having a continuously circular cross-section;
at least a second double-walled rotary tubular driven conveyor including at least a second drive means therefore synchronized with said first drive means, said second conveyor having a continuously circular cross-section;
and,
a tube skipping conveyor completely surrounding said first and second double-walled rotary tubular conveyors, said tube skipping conveyor having a continuously circular cross-section.

4,373,626
CARTON FOR CARDED PRODUCT
Harry I. Roccaforte, Western Springs, Ill., assignor to Champion International Corporation, Stamford, Conn.
Filed Jun. 2, 1980, Ser. No. 155,439
Int. Cl.³ B65D *81/00, 25/54, 85/30*
U.S. Cl. 206—45.14 **11 Claims**

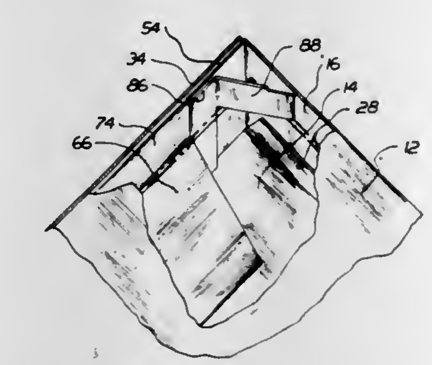

1. A carton for supporting a card with a product mounted on a face thereof to space the product from the carton structure including:
a substantially planar back face panel;
a first side wall panel hinged to a first side edge of said back panel;
a front face panel hinged to said first side wall panel along the edge thereof opposite said back face panel, said front face panel extending substantially parallel to said back face panel and being substantially identical in size and shape to said back face panel;
a second side wall panel hinged to the side edge of said front face panel opposite said first side wall panel, said second side wall panel hinged to the side edge of said back face panel opposite the first side edge thereof;
a first pair of end closure panels, one each hinged at opposite ends of said back face panel;
a second pair of end closure panels, one hinged at opposite ends of said front face panel;
a first pair of end closure flaps, one each hinged at opposite ends of said first side wall;
a second pair of end closure flaps, one each hinged at opposite ends of said second side wall;
a pair of end support flaps, one each hinged to and folded back on the adjacent end closure panel of one of said pairs of end closure panels, said end support flaps extending inwardly and angularly engaging the face panel to which its respective adjacent end closure panel is hinged;
and means at each carton end to maintain the product and the card end at that carton end spaced from said face panel opposite the face panel in engagement with the end support flap at that carton end.

4,373,627
ARTICLE CARRIER
Prentice J. Wood, Hapeville, Ga., assignor to The Mead Corporation, Dayton, Ohio
Continuation-in-part of Ser. No. 34,429, Apr. 30, 1979, abandoned, which is a division of Ser. No. 893,190, Apr. 3, 1978, abandoned. This application May 15, 1980, Ser. No. 150,204
Int. Cl.³ B65D *75/00*
U.S. Cl. 206—201 **7 Claims**

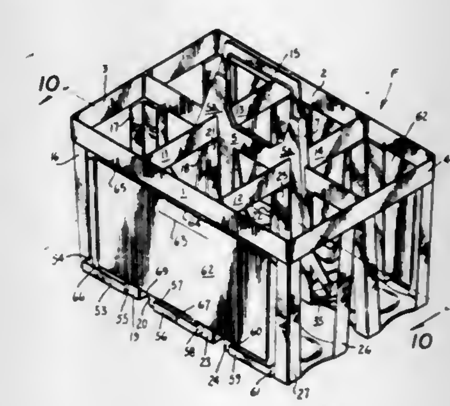

1. An article carrier formed in a rectilinear arrangement and comprising a frame structure, a plurality of struts depending downwardly from said frame structure and arranged in at least two groups, a bottom element secured to the lower edges of each group of struts to form a pair of article receiving cells, a partition element disposed between and secured to two adjacent struts of one group of struts and forming a partition between said cells, the midportion of said partition element being transversely yieldable, a base strap interconnecting the lower portions of two adjacent struts of at least one group, said base strap projecting outwardly of said carrier with respect to said two adjacent struts, and a promotional insert being associated with one side of said carrier and including a retaining tab integrally joined to the lower edge of said insert and disposed in overlapping relationship with the inner surface of said base strap.

4,373,628
WOODWORKING PLANE HOLDER
Christopher Dantes, 40 Kale Rd., Rocky Pt., N.Y. 11778
Filed Jun. 8, 1981, Ser. No. 271,538
Int. Cl.³ B65D *61/00*
U.S. Cl. 206—349 **4 Claims**

1. A wood-working plane holder comprising:
a flat rectangular base structure, said base having a rectangular cut-out portion transverse to said base and shaped and located therein to receive the blade of a plane;
a hollow rectangular enclosure attached to said base and

forming therewith a cavity of predetermined size to receive a plane; and

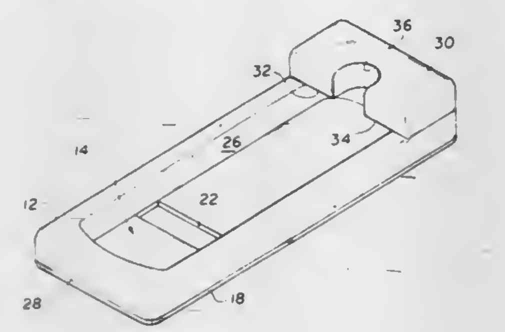

a cover for the cavity attached to said rectangular enclosure at one end thereof so that the cover overlies a portion of the cavity at said one end.

4,373,629
USED SURGICAL SHARPS CONTAINER WITH RE-USABLE MAGNETIC BASE

Roy A. Ulin, Wyckoff; Ted Foley, West Milford, both of N.J., and Hasmukh Shah, Bombay, India, assignors to Akzona Incorporated, Asheville, N.C.
Filed Jun. 9, 1981, Ser. No. 271,873
Int. Cl.³ A45C *11/26*
U.S. Cl. 206—350 **22 Claims**

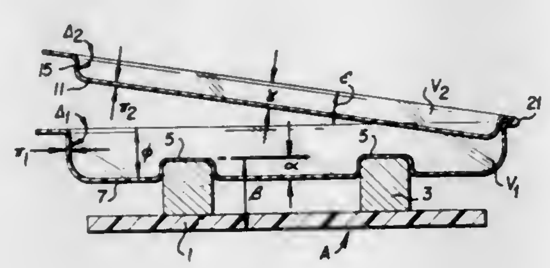

1. A container for storing sharps, comprising:
(a) base means formed of a reuseable and sterilizable material, said base means having a platform and at least one rib of magnetic material fixed to said platform and projecting upwardly from said platform to engage collecting means;
(b) collecting means for surgical needles or blades, said collecting means having at least one inverted recess to engage said at least one rib of said base means, said at least one inverted recess and at least one rib dimensioned in such a way to provide a reversibly interlocking frictional fit between said collecting means and said base means so as to make said collecting means disposable by removing said from said base means; and
(c) cover means with said collecting means to form an enclosure, said cover means capable of tight-fitting engagement with and placement over said collecting means to prevent said sharps from escaping from said enclosure when said cover means are in tight-fitting engagement with said collecting means, said collecting means and said cover means attached to each other by hinge means, said collecting means being provided with locking means to lock said cover means with said collecting means when said cover means is in tight-fitting engagement with said collecting means.

4,373,630
WRAPAROUND ARTICLE CARRIER WITH ADJUSTABLE GIRTH

James R. Oliff, Austell, Ga., assignor to The Mead Corporation, Dayton, Ohio
Filed Jan. 25, 1982, Ser. No. 342,400
Int. Cl.³ B65D *71/00, 85/62*
U.S. Cl. 206—434 **5 Claims**

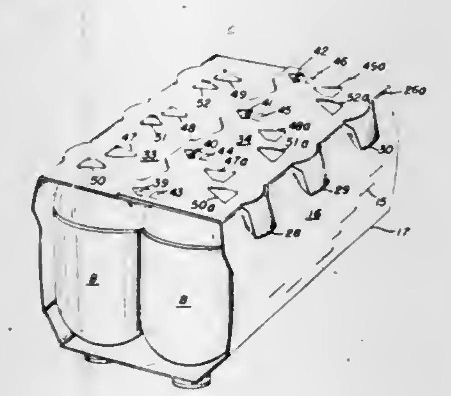

1. In an article carrier of the wraparound type formed from a blank of generally rectangular configuration and having lap panels at its outer ends which are overlapped and secured together in flat face contacting relation in alternate relative positions of long and short overlaps to form tubular structures of different girths respectively, an improved tightening means comprising at least one pair of tightening apertures formed respectively in said lap panels for receiving machine tightening elements operable to impart tightening action to said blank when disposed about a group of articles, said one pair of tightening apertures being spaced a predetermined distance from one longitudinal edge of said blank, and a second pair of tightening apertures formed respectively in said lap panels for receiving machine tightening elements operable to impart tightening action to said blank when disposed about a group of articles, said second pair of tightening apertures being spaced said predetermined distance from the longitudinal edge of said blank which is opposite from said one longitudinal edge thereby to adapt the carrier blank for transverse orientation in different positions relative to the associated group of articles by rotating the blank when disposed in a horizontal plane through an angle of 180° about a vertical axis, said second pair of tightening apertures being spaced from each other in a direction longitudinally of the blank by a distance which is different than the spacing between said one pair of tightening apertures in a direction longitudinally of the blank thereby to adapt the carrier for packaging article groups comprising articles of different sizes, said pairs of apertures being arranged in staggered relationship with respect to each other.

4,373,631
TAMPON PACK ESPECIALLY FOR A COATED TAMPON CONTAINING MEDICAMENTS

Axel Friese, and Frantisek Simunek, both of Wuppertal, Fed. Rep. of Germany, assignors to Dr. Carl Hahn G.m.b.H., Dusseldorf, Fed. Rep. of Germany
Continuation of Ser. No. 126,593, Mar. 3, 1980, abandoned. This application Dec. 21, 1981, Ser. No. 332,687
Claims priority, application Fed. Rep. of Germany, Apr. 24, 1979, 2916564
Int. Cl.³ A61F *13/20;* **B65D** *81/02, 57/00*
U.S. Cl. 206—438 **6 Claims**

1. A tampon pack for containing and protecting a cylindrical tampon having a coated insertion end and an uncoated rear end, said pack walls provided with at least one constriction in the zone adapted to contain the rear end of the tampon whereby said tampon may be held with the coated insertion end out of substantial contact with the container walls; said tampon pack in the form of an elongated blister pack having a body portion and a cover wherein the transverse cross-section of the constriction is essentially in the form of a segment of a

circle with a trapezoid placed thereon; said trapezoid having its shorter parallel side coincident with the imaginary secant of

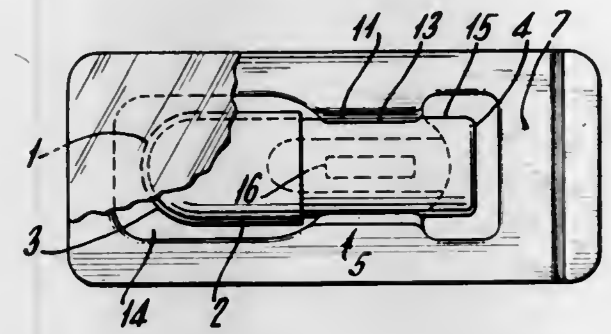

said segment, and its longer parallel side formed by the cover of the blister pack.

4,373,632
NAIL POLISH HANGER

John M. VanZandt, 15932 Northfield, Pacific Palisades, Calif. 90272
Filed Feb. 19, 1981, Ser. No. 236,288
Int. Cl.³ B65D *73/00*
U.S. Cl. 206—457 **5 Claims**

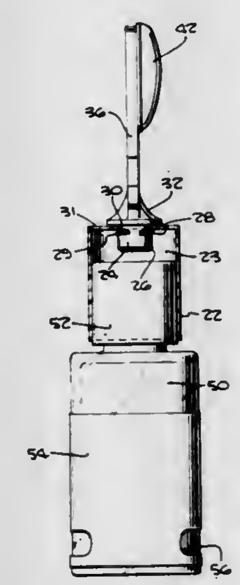

1. An apparatus for suspending a container from a cap removably attached to said container comprising:
(a) sheath means, encircling said cap, for attaching said apparatus to said container, said sheath means including a bore disposed over said cap; and
(b) hanger means, rotatably attached to said sheath means at said bore and including an arcuate opening for positioning over a point of support, for rotatably suspending said sheath means and said container from said point of support, said hanger means including:
(1) a substantially flat and elongated member, having a cutaway area therein defining said arcuate opening;
(2) a flange disposed at one end of said elongated member, said flange being disposed adjacent said bore in said sheath means and being larger in area than said bore;
(3) a shaft member extending outwardly from said flange and having a cross section substantially identical to that of said bore, said shaft being positionable within said bore; and
(4) thread means, disposed on said shaft, for maintaining said hanger means rotatably attached to said sheath means after said shaft member is placed in said bore and said thread means is urged past said sheath means.

4,373,633
STACKABLE CAN

Milton F. Lutz, Sr., 5906 Wolf Lake Rd., Grass Lake, Mich. 49241
Filed Sep. 14, 1981, Ser. No. 301,454
Int. Cl.³ B65D *21/02*
U.S. Cl. 206—508 **2 Claims**

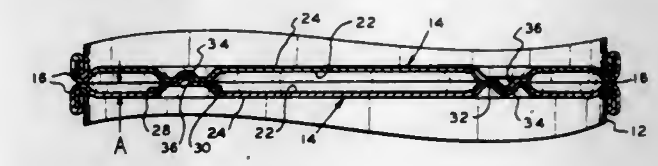

1. An end for a can characterized by its ability to interrelate with a similar can end to facilitate the vertical stacking of cans comprising, in combination, a substantially flat sheet metal member having an axis, a general plane of configuration perpendicular to said axis, an inner side, an outer side and a periphery, an annular ridge defined on said member from the material thereof axially extending from said general plane on said outer side concentric to said member axis and radially spaced inwardly of said periphery, said ridge including a flat support surface substantially parallel to said member general plane comprising the maximum axial extension of said ridge from said member general plane, a plurality of axially extending rounded and concave recesses defined in said ridge support surface, a plurality of axially extending rounded and convex projections defined in said ridge support surface complementary in configuration and dimension to said recesses, said recesses and projections being at an equal radial distance from said member axis and of a diameter less than the radial dimension of said support surface and spaced from each other in non-intersecting relationship, said recesses and projections being angularly spaced about said member axis upon said ridge support surface in an alternating relationship, and an annular flat ring defined on said member within the general plane thereof intermediate said periphery and said ridge.

4,373,634
RESILIENT NESTABLE CUP

Bryant Edwards, Clarendon Hills, Ill., assignor to Illinois Tool Works Inc., Chicago, Ill.
Filed Jan. 19, 1981, Ser. No. 225,954
Int. Cl.³ B65D *21/02*
U.S. Cl. 206—520 **5 Claims**

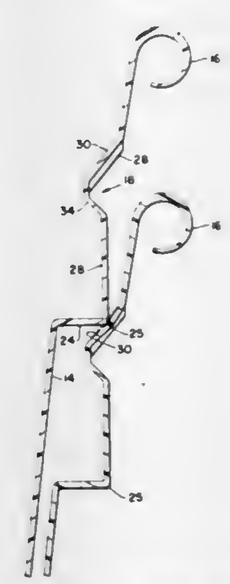

1. One-piece nestable cup of thin wall plastic construction comprising a bottom wall and side wall integral therewith tapering upwardly and outwardly therefrom, the upper margin of the sidewall having thickened rim means of predetermined axial extent, said side wall having circumferential stacking ring means formed therein positioned below said upper margin and

adjacent the bottom wall and having an axial extent greater than the axial extent of the thickened rim means, said stacking ring means having, at its lower extremity, circumferentially disposed externally projecting shoulder means and having, at its upper extremity, circumferentially disposed internally projecting shoulder means of smaller minimum diameter than the maximum diameter of said external shoulder means and spaced upwardly therefrom, said internal shoulder means adapted to form a shelf to co-act with the complementary external shoulder means of a like container to positively limit the extent of telescopic association of said like containers, supporting strut portion located between the internally projecting shoulder means and externally projecting shoulder means, the strut portion tapered downwardly and outwardly toward the bottom wall of the axial uppermost extremity of the strut extending inwardly of the axial lowermost extremity of the strut, one of said shoulder means presenting a co-acting first surface means extending in a plane generally perpendicular to the central axis of the cup, and the other of said shoulder means including a generally bulbous co-acting second surface means adapted to extend toward a first support of a telescopically associated like container, the bulbous second surfacing being of significant surface area relative to the surface circumferential area of the remainder of the shoulder means upon which it is formed whereby limited contact between said first and second co-acting surfaces transforms into substantial contact in the plane of the first surface means due to the resilient compression of the bulbous surface upon axial force exerted on the stack of cups, the first and second co-acting surface and strut portion creating two co-acting spring means which cooperate to overcome the effect of shock loading on a stack of nested containers.

4,373,635
FILTERS
Robert S. Mules, Talbot Green, Wales, assignor to Fram Europe Limited, Glamorgan, Great Britain
Filed Sep. 30, 1981, Ser. No. 307,043
Claims priority, application United Kingdom, Sep. 23, 1980, 8030554
Int. Cl.³ B65D *85/84*
U.S. Cl. 206—525 **3 Claims**

1. In a combination filter cartridge and shipping tray for protecting the filter cartridge, said filter cartridge comprising an array of transversely folded pleats having a pair of opposite ends, the ends of each of said pleats being sealed, a perimetrical strip of sealing material extending around said array for sealing said filter cartridge in use, said shipping tray having an upstanding side wall extending around said cartridge and a raised center portion cooperating with said side wall to define a trough extending around the perimeter of said tray, said trough molding said sealing material into a predetermined shape, the upstanding wall of said tray defining a cavity receiving said filter cartridge and permitting the latter to sealingly engage with the sealing material in said trough when the filter is manufactured whereby the sealing material hardens into a seal carried on said cartridge when the tray is removed from the cartridge, said tray protecting both said seal and said array of pleats, and a protective frame enclosing at least a portion of said array of pleats, said frame including a perimetrically extending portion projecting from said pleats, said projecting portion being embedded in said sealing material.

4,373,636
CONTAINER
Louis S. Hoffman, Evan Farm Rd., Morris Township, Morris County, N.J. 07960
Filed Feb. 18, 1981, Ser. No. 235,754
Int. Cl.³ B65D *85/72;* **A45C** *11/20;* **A23B** *7/14;* **B65D** *51/16*
U.S. Cl. 206—551 **27 Claims**

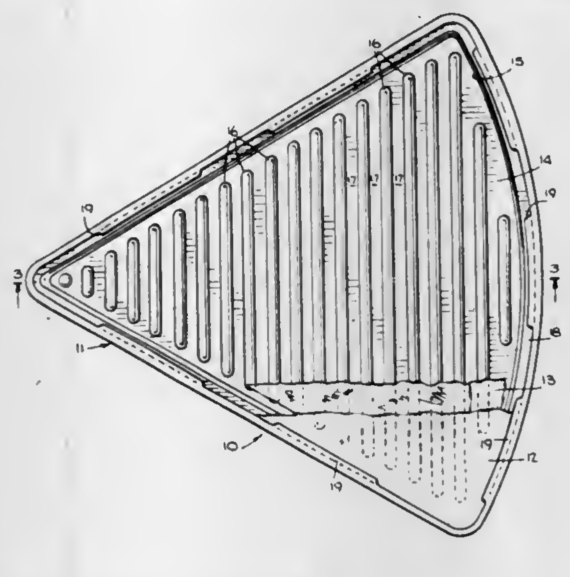

1. A container for pizza comprising
a tray of predetermined geometric shape having a base, a peripheral wall defining a chamber and a plurality of raised elongated ribs on said base for receiving pizza thereon while defining airflow passages therebetween; and
a cover removably mounted on said wall of said tray to enclose said chamber.

4,373,637
COLLAPSIBLE PALLET MOUNTED CONTAINER
Joseph C. Shippell, Montrose, Mich., assignor to Consolidated Packaging Corporation, Flint, Mich.
Filed Nov. 30, 1981, Ser. No. 325,579
Int. Cl.³ B65D *19/00*
U.S. Cl. 206—600 **13 Claims**

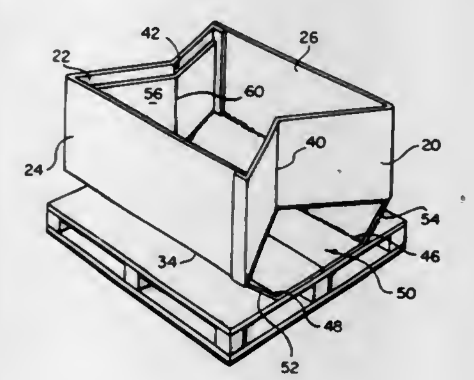

1. A collapsible container assembly comprising:
a horizontal rigid pallet base;
four flexible interconnected wall panels comprising two opposite side panels and two opposite end panels;
a container floor with at least two floor score lines parallel to each other dividing the floor to define a central portion and outer portions of each side of and connected to the central portion;
the container floor being integrally and flexibly connected at the outer edges of the outer portions to the bottom edges of the two opposite side panels by means of a pair of side score lines;
the central portion being affixed to the rigid pallet and the outer portions being foldable along the floor and side score lines;
vertical score lines dividing the two opposite end panels into two sections, whereby the two sections on each side of the vertical score lines on each of the two opposite end panels are foldable inwardly along the vertical score lines from an opened position to a collapsed position;
the floor score lines and the side score lines and the vertical score lines all forming flexible connections allowing the container to be collapsed in a flattened configuration above the pallet for storage.

4,373,638
SORTING APPARATUS
Mark A. Schapper, Ivanhoe, Australia, assignor to Sphere Investments Limited, Nassau, The Bahamas
Filed Jan. 2, 1981, Ser. No. 222,070
Claims priority, application South Africa, Jan. 24, 1980, 80/0429
Int. Cl.³ B07C *5/00, 5/344*
U.S. Cl. 209—570 **17 Claims**

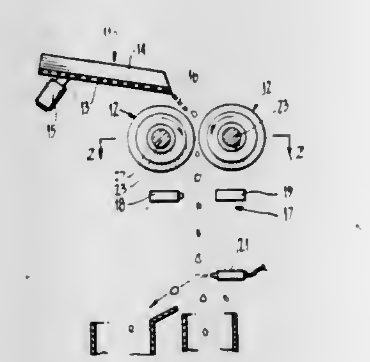

1. Sorting apparatus for sorting objects according to the degree to which they possess a certain characteristic, comprising feed means operable to feed objects to be sorted in a stream in which the objects are spaced apart from one another and along a path which comprises a free flight trajectory; means to measure a characteristic of the objects as they move in said stream; and means selectively to deflect individual objects from said free flight trajectory according to the measure of said characteristic obtained for those objects; wherein said feed means comprises a pair of movable elements having surfaces defining an upwardly facing nip, means to feed the objects to be sorted downwardly into said nip and drive means to move said elements such that said surfaces move downwardly at the nip so as to grip the objects and accelerate them downwardly and subsequently to project them downwardly into free flight such that said free flight trajectory is substantially vertical.

4,373,639
SUPPORTIVE ANGLE HOLDING MEANS AND STRUCTURE CLAMPING MEANS FOR STORAGE DEVICES
Alfred J. Tricon, 9654 Winsome La., Houston, Tex. 77063
Filed Jul. 16, 1980, Ser. No. 169,290
Int. Cl.³ A47F *7/00*
U.S. Cl. 211—86 **6 Claims**

1. An apparatus for tiltably connecting a storage device to a drafting table and the like, comprising:
a first threaded rod member,
a second threaded rod member aligned with and spaced from said first rod member and having an eye portion at one end,
a first bar member slidably disposed about said rod members,
a second bar member slidably disposed about said rod members and alignedly spaced from said first bar member,
a first pair of nut members each threadedly and compressively disposed on said first rod member for urging one of said bar members toward the other of said bar members,
a second pair of nut members each threadedly and tensionally disposed on said second rod member for urging one of said bar members from the other of said bar members,
support means for storing and holding selected objects, and connector means for pivotally interconnecting said support means with said eye portion of said second rod member for positioning said support means independently relative

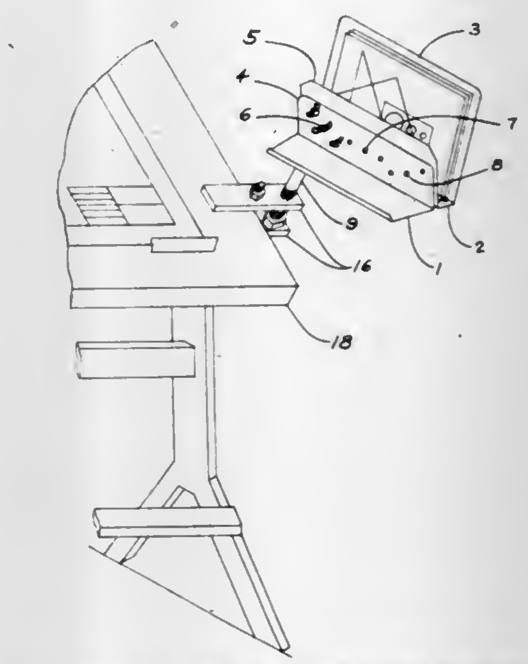

to the positions of said first rod member and said bar members.

4,373,640
MEDICINE BOTTLE ACCESSORY
George F. Resio, 212 Mary St., Old Forge, Pa. 18518
Filed Aug. 26, 1977, Ser. No. 827,852
Int. Cl.² B65D *41/26, 51/24, 55/00*
U.S. Cl. 215—228 **3 Claims**

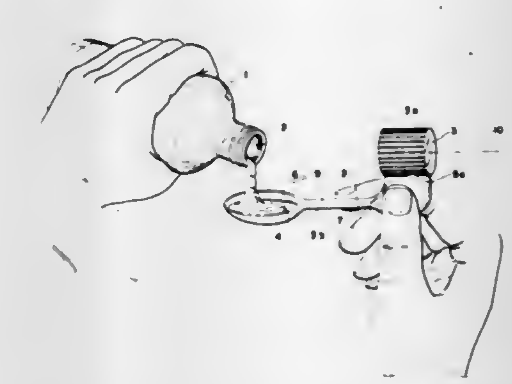

1. A medicine bottle accessory for a medicine bottle having an open top, said medicine bottle accessory comprising
a bottle top of generally cup type configuration removably affixed to the bottle at the top thereof for selectively opening and closing the open top of the bottle, and a spoon integrally formed with the bottle top and extending therefrom whereby a consumer of medicine from the bottle having a contagious illness prevents the spread of his illness by utilizing the spoon to convey medicine from the bottle to his mouth, said spoon having an elongated stem having spaced opposite first and second ends and extending from the bottle top and forming a finger grip at its first end, and an open receptacle extending from the second end of the stem, said stem being of substantially L-shape having a first part in the area of the first end thereof substantially coplanar with a diametrical plane through the bottle top and a second part in the area of the second end thereof substantially perpendicular to the first part of the stem and in spaced substantially parallel relation with the axis of the bottle top.

4,373,641
PLASTIC CLOSURE AND RELATED CONTAINER FINISH
John N. Banich, Sr., Chicago, and Donald H. Zipper, Western Springs, both of Ill., assignors to The Continental Group, Inc., Stamford, Conn.
Filed Mar. 9, 1981, Ser. No. 241,972
Int. Cl.³ B65D *41/06*
U.S. Cl. 215—331 4 Claims

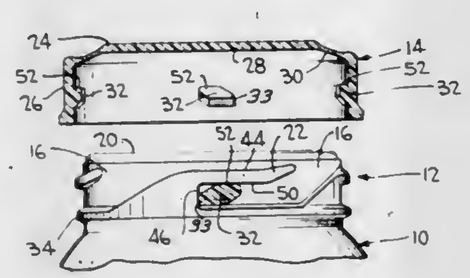

1. A closure and neck finish combination, said neck finish having a terminal sealing surface and including a plurality of thread segments projecting radially from a container neck, said closure being formed of a plastic material and including an end panel for sealing engagement with said terminal sealing surface and a depending skirt, said skirt having radially inwardly directed lugs for underlying said thread segments and retaining said closure on said neck finish; the improvement comprising said neck finish including a support surface on said neck below said thread segments, and said skirt having an internal surface area for engaging said support surface for preventing distortion of said skirt due to the loading of said lugs, said thread segments and said lugs having mating surfaces sloping radially outwardly and axially upwardly at a maximum angle of 10° to the axis of said neck.

4,373,642
MATERIAL HANDLING TOTE
Richard H. Wolters, Grand Rapids; William C. Anderson; Charles R. Tyke, both of Cascade, and Charles P. Schreiner, Saugatuck, all of Mich., assignors to Westinghouse Electric Corp., Pittsburgh, Pa.
Filed Dec. 4, 1980, Ser. No. 212,946
Int. Cl.³ B65D *1/22, 6/34, 21/02*
U.S. Cl. 220—72 9 Claims

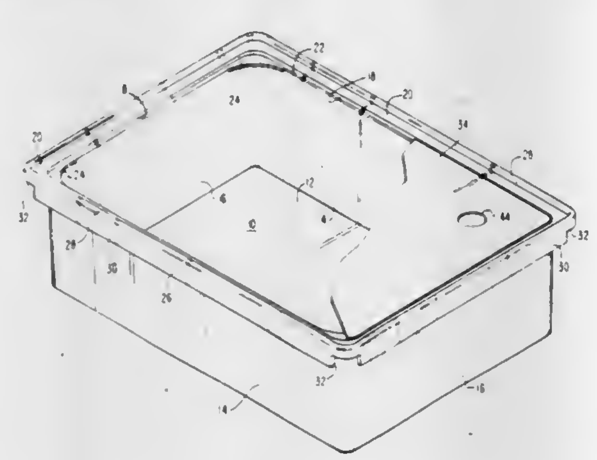

1. A material handling tote comprising:
a bottom wall, a pair of side walls and a pair of end walls defining an open top container;
a continuous flange extending outwardly from the upper edge of said side walls and said end walls, said continuous flange having at its outer edge a vertical flange having an upper portion extending above said continuous flange and a lower portion extending below said continuous flange, said lower portions being substantially equal in length to their adjacent end and side walls thereby providing open corners for lateral access to the space between said end walls and said side walls and their adjacent lower portions of said vertical flange; and
a plurality of raised ribs on the inner surface of the lower portions of said vertical flange, said raised ribs constructed and arranged to spread the load equidistantly across said vertical flange when said material handling tote is hung from a support rail.

4,373,643
TRANSPORT CONTAINER
Joachim Przytarski, Berlin, Fed. Rep. of Germany, assignor to KTS, Kunstoff-Technische Spezialfertigungen Anni Przytarski, Berlin, Fed. Rep. of Germany
Filed Jul. 30, 1981, Ser. No. 288,348
Claims priority, application Fed. Rep. of Germany, Apr. 3, 1981, 3114174
Int. Cl.³ B65D *25/14, 90/04, 90/06*
U.S. Cl. 220—450 6 Claims

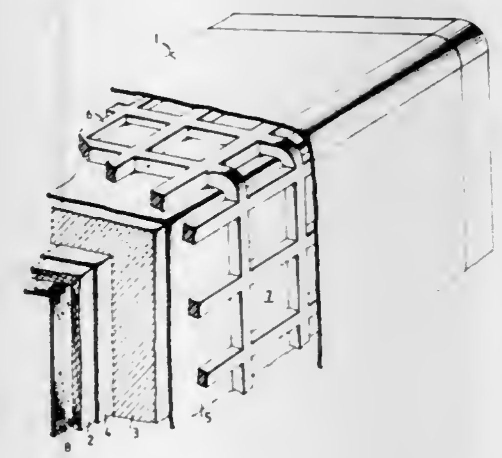

1. A lightweight transport container for transporting goods which are sensitive to humidity and temperature changes, of the type composed of walls and at least one lid, the improvement comprising:
said walls and lid each being composed of a plurality of layer zones which are coordinated with each other with respect to their operating characteristics, including an inner layer zone comprising a rigid, moisture-storing material, a heat-insulating material layer zone disposed atop said inner layer zone which is covered on both its inner and outer sides with a water impermeable foil, a wide mesh-like grid structure which rests on the foil covering the outer side of said heat-insulating material layer zone and forms a plurality of air chambers, and an outer wall for said transport container which covers said grid structure.

4,373,644
CHILD RESISTANT TYPE TRIGGER ACTUATED PUMP DISPENSER
Robert A. Bennett, 170 Sturbridge Rd., Easton, Conn. 06425
Filed Feb. 17, 1981, Ser. No. 234,928
Int. Cl.³ B05B *11/00*; G01F *11/04*
U.S. Cl. 222—153 10 Claims

1. A device for use with a manually operable trigger pump having a pump body and a circular cap disposed below the body and adapted to engage a container having material to be pumped out by said pump, said pump having a generally vertical trigger pivotally coupled at its upper end to said body and a linkage coupled at one end to said trigger at a point intermediate the ends of the trigger, said linkage extending inclinedly upwardly upwards from said coupled end into said body, said linkage being moved into said body when said trigger is pivoted in a vertical plane toward said body to operate said pump, said device comprising:
locking means securable to the outer surface of said cap in such manner as to be manually rotatable about said cap; and
a generally horizontal arm integral at one end with said locking means and when said means is secured to the cap extending radially outward from said cap, said arm having in its top surface a radially extending recess, said means when secured to said cap being rotatable to a locked position at which the other end of the arm is aligned with but is inwardly spaced from the trigger and said linkage engages said recess, the separation between said trigger and the other end of said arm, when the means is in locked

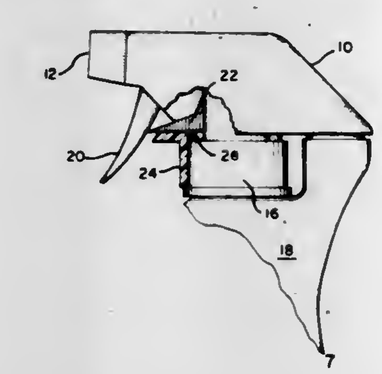

position, being large enough to allow sufficient pivotal movement of the trigger toward the pump body to raise the linkage partially out of engagement with the recess and small enough to prevent trigger operation of the pump, whereby the pump is locked into an inoperative position, said pump being unlocked and in operative position when the trigger is pivoted inwardly to partially disengage the linkage in the recess and the locking means is simultaneously rotated to move the other end of the arm out of alignment with the trigger whereby the linkage is fully disengaged from the recess and the trigger can be pivoted in normal operative manner.

4,373,645
RESILIENT LINER FOR PARTICULATE BULK CARGO RECEPTACLES
Hugh Boyd, Tallmadge, Ohio, assignor to Goodyear Aerospace Corporation, Akron, Ohio
Filed Mar. 30, 1981, Ser. No. 248,765
Int. Cl.³ B65G *69/08*
U.S. Cl. 222—203 9 Claims

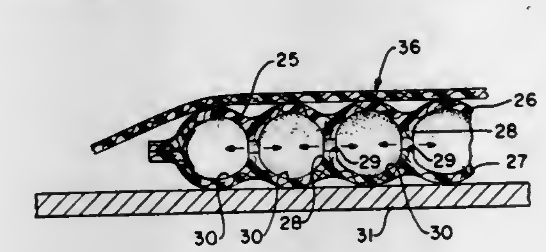

1. A resilient liner for mounting within a hopper type receptacle which receives and discharges flowable bulk particulate material, said receptacle having conical or sloping walls in at least the bottom portion thereof, said liner comprising at least one panel, each panel comprising:
A. a fluid tight envelope having a top and bottom portion;
B. a valve located in the envelope in communication with the inside and outside of the envelope, through which fluid may pass in or out of the envelope when the valve is open; and
C. connecting means joined to the top and bottom portions of the envelope and extending therebetween within said envelope to retain said top and bottom portion in fixed spaced relationship to each other at various locations on both the top and bottom portion, said locations on one portion lying in a first plane and said locations on the other portion lying in a second plane substantially parallel to the first plane, said connecting means forming multiple chambers within the envelope when the inside of the envelope is at a static pressure at least slightly higher than the ambient exterior pressure;
D. said envelope and connecting means cooperatively interacting with each other in such manner that when the panel is attached to the inside of one of the walls of a receptacle and pieces of particulate material passing through the receptacle strike the top portion of the envelope, the top portion is deflected inwardly in the areas struck, thereby creating an undulating random wave motion on the top portion which aids in maintaining a constant flow of particulate material through the receptacle; and
E. means attaching each panel to the inside of receptacle walls.

4,373,646
CARTRIDGE-TYPE DISPENSER
George E. MacEwen, Kansas City, Mo., assignor to Phillips Petroleum Company, Bartlesville, Okla.
Continuation of Ser. No. 63,880, Aug. 3, 1970, abandoned. This application May 14, 1981, Ser. No. 263,654
Int. Cl.³ B65D *85/72*
U.S. Cl. 222—327 29 Claims

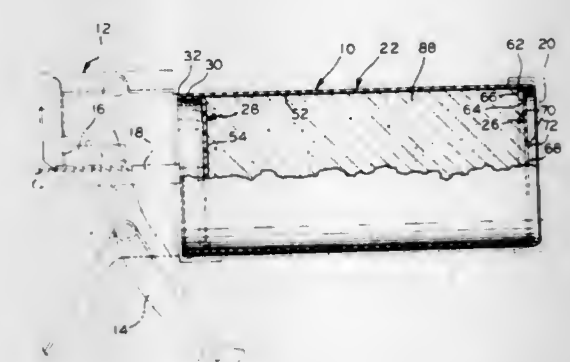

1. A container comprising:
a generally cylindrically shaped tubular sidewall having an inner surface and first and second open ends, said first open end being formed in a radially inwardly rolled lip, and said second open end having an annular end face;
a generally flat circular disc disposed within said tubular sidewall in abutting relation with the radially inwardly rolled lip and having a generally cylindrical skirt on the outer periphery of said disc, said skirt terminating in a radially outwardly extending flange portion with a plurality of circumferentially spaced, radially outwardly extending bosses each extending between said flange portion and said generally cylindrical skirt, said skirt, said flange portion and said bosses being enfolded by the radially inwardly rolled lip of said generally cylindrically shaped tubular sidewall; and
plug top closure means at least partially disposed within said tubular sidewall at the second open end thereof.

22. In a cartridge-type dispenser of the type which includes a generally cylindrical tubular body having first and second end portions with dispensing outlet means in the first end portion thereof and with the second end portion thereof being open and having an annular end face thereon, the improvement comprising:
plug closure means adapted to be at least partially disposed within the second end portion of said tubular body for closing said cartridge-type dispenser, said plug closure means having a generally cylindrical closure sidewall sized and shaped to be closely received within the second end portion of said tubular body and having radially outwardly extending closure flange means on a first end portion of said closure sidewall adapted for yieldably engaging said tubular body, said closure sidewall further including at least one radially outwardly extending circumferential rib means on the outer surface thereof

adapted to tightly and slidingly engage the inner surface of said tubular body so as to at least temporarily retain said plug closure means within said second end portion of said tubular body, and means closing a second end of said generally cylindrical closure sidewall, said at least one radially outwardly extending circumferential rib means being interrupted at at least one location so as to provide means for venting gas therepast during insertion of said plug closure means in the second end portion of said tubular body.

4,373,647
VALVE FOR USE WITH FLEXIBLE DISPENSING TUBE
Calvin R. Hollingsworth, 4744 NE. 180th, Seattle, Wash. 98155
Division of Ser. No. 157,406, Jun. 9, 1980, abandoned. This application Jan. 22, 1982, Ser. No. 341,815
Int. Cl.[3] B67D *3/00*
U.S. Cl. 222—528 **6 Claims**

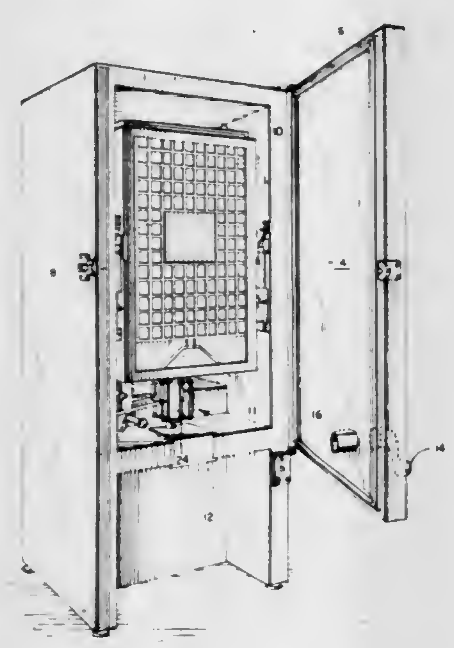

1. A valve mechanism for use with a flexible dispensing tube or the like comprising:
upper plate means adapted to be secured in a stationary position relative to the dispensing tube when in use, said plate including an opening to receive the dispensing tube,
a first set of substantially parallel pivotally mounted linking elements having one end secured to one face of the upper plate means,
middle plate means pivotally secured to the other end of the first set of elements, said middle plate means including an aperture to receive the tube means,
a second set of substantially parallel linking elements pivotally mounted linking elements secured to the middle plate means on the face opposite the connection with the first set of linking elements,
bottom plate means pivotally secured to the other end of the second set of linking elements, said bottom plate means including an aperture to receive the dispensing tube, and
actuating means to move the two sets of linking elements out of alignment crimping the dispensing tube and preventing fluid flow therethrough.

4,373,648
CONTROLLED RATE LINEAR MOTION DRIVE
Norbert L. Wright, Park Ridge, and Jerome A. Selusnik, Chicago, both of Ill., assignors to Teepak, Inc., Chicago, Ill.
Filed May 8, 1980, Ser. No. 147,769
Int. Cl.[3] A41H *43/00;* A22C *11/02*
U.S. Cl. 223—28 **7 Claims**

1. In a drive mechanism for converting rotational movement to linear movement, said drive mechanism being of the rack and pinion type wherein the available rack length is less than that required for its intended stroke, the improvement comprising:
a rack linearly movable from one extreme position to another extreme position; and
at least two spaced pinions disposed in substantially coplanar relationship for mating engagement with said rack, said

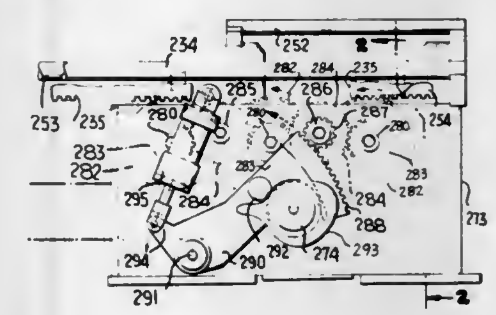

pinions being movable in synchronized relationship with each other;
the length of said rack and the spacing of said pinions being such that when said rack is in either of said extreme positions the same mates with only one of said pinions whereas, when said rack is in a position therebetween the same simultaneously mates with two of said pinions.

4,373,649
WAISTLINE SUPPORTABLE DISPENSER FOR MARTIAL ARTS "SHURIKENS" THROWING STARS
Joko Ninomiya, 4534 E. Colfax Ave., Denver, Colo. 80220
Filed Aug. 31, 1981, Ser. No. 297,727
Int. Cl.[3] A41F *9/00*
U.S. Cl. 224—163 **8 Claims**

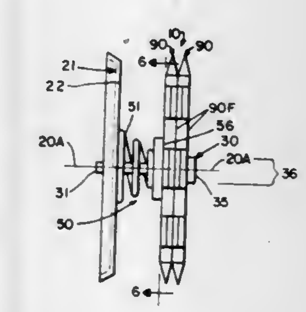

1. Waistline supportable dispenser for a plurality of uniplanar martial arts throwing stars, said throwing stars being respectively provided with an elliptical central opening, and said waistline supportable dispenser comprising:
a. a rack member having an upright frontal-side and having support means for removably attaching the rack member to the user's wearing apparel substantially at waistline level;
b. a horizontal peg rigidly attached to a central portion of the rack member and extending forwardly from its frontal-side, said peg including a trail-length relatively near said rack frontal-side and also including a cross-sectionally enlarged lead-length relatively forwardly remote from said frontal-side, said peg trail-length at its largest cross-sectional dimension being smaller than the minor-axis of the throwing star elliptical central opening, said peg lead-length being cross-sectionally ellipsoid wherein its broadest-extent is dimensionally intermediate the minor-axis and major-axis dimensions of the throwing star elliptical central opening;
c. a plurality of upright throwing stars rotatably surrounding the peg trail-length, the throwing stars being individually empirically rotated about said trail-length until their central opening minor-axes are parallel to the broadest-extent of the peg lead-length; and
d. spring means extending forwardly from the rack member frontal-side so as to forwardly bear against the trailmost throwing star whereby the stars are yieldably urged against the peg lead-length in a condition wherein they can be individually dispensed commencing at the lead-most throwing star only by counter-rotation until the central opening major-axis becomes parallel to the broad-est-extent of the peg lead-length.

4,373,650
CONTINUOUS CUTTER FOR A GLASS FIBER CHOPPER
Benjamin A. Gay, Huntington Beach, Calif., assignor to PPG Industries, Inc., Pittsburgh, Pa.
Filed Jan. 8, 1981, Ser. No. 223,563
Int. Cl.[3] D01G *1/04*
U.S. Cl. 225—97 **7 Claims**

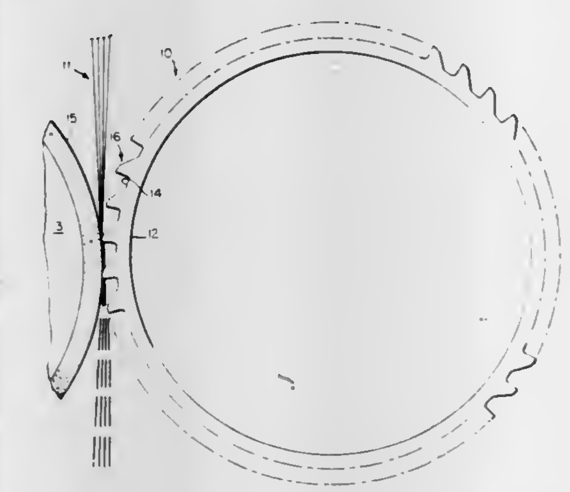

1. A continuous cutter ring for use in a glass fiber chopper apparatus to sever glass fiber filaments passing between said cutter ring and a cooperating elastomeric cot ring into chopped lengths of glass fibers, said cutter ring comprising:
an annular ring, said ring having an inner circumferential surface and an outer periphery; and
a plurality of chisel-shaped teeth integrally formed on said outer periphery, each of said teeth having a leading face extending radially outwardly from said outer periphery, a horizontal surface extending rearwardly in the direction of rotation of said cutter ring from an upper edge of said leading face, a transition surface extending downwardly and rearwardly from said horizontal surface, and a skirt extending downwardly and rearwardly from said transition surface to said outer periphery of said annular ring, said teeth being equally spaced on said outer periphery and extending generally across said outer periphery, so that the glass fiber filaments are sharply bent by the cooperation of said horizontal surface portion of said chisel-shaped teeth and said elastomeric cot ring to effect the severance of said glass fiber filaments by a bending and breaking action.

4,373,651
METHOD AND APPARATUS ASSEMBLING AND NAILING BOARDS TOGETHER
Charles E. Fanslow, 3371 S. Service Dr., Red Wing, Minn. 55066
Filed Sep. 2, 1980, Ser. No. 183,212
Int. Cl.[3] B27F *7/02*
U.S. Cl. 227—3 **30 Claims**

1. An automatic board nailing machine comprising,
storage means for storing in stacked relation a plurality of inner boards,
automatically actuated conveyors conveying the inner boards longitudinally in a first direction along one of the longitudinal edges of the inner boards directly into nailing position from said storage means,
magazines for storing outer boards in stacked relation,
automatically actuated feeding means feeding in a second direction at right angles to the first direction outer boards in upright position on one of the ends of the outer boards from said magazines into nailing position on opposite sides of said inner boards to produce an assembly for nailing,
automatically actuated opposed nailing means on opposite

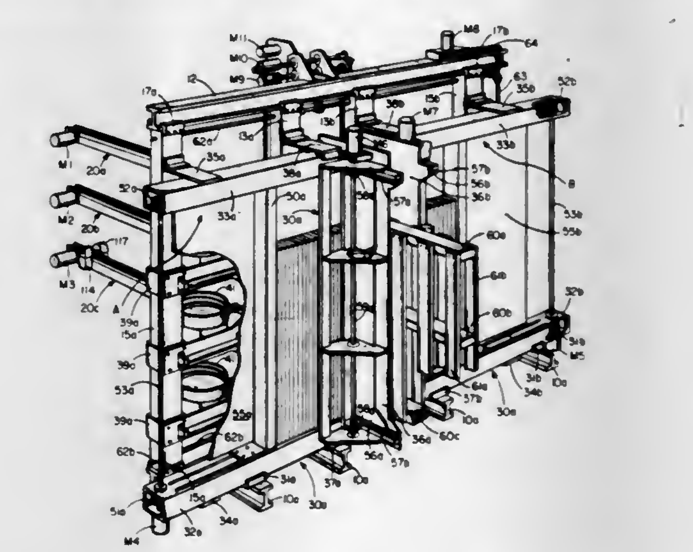

sides of said assembly for simultaneously nailing the outer boards fed into nailing position, and
means for discharging the nailed-together assembly from the nailing position in the first direction.

4,373,652
APPARATUS FOR END-PLATING ELONGATE MEMBERS SUCH AS RAILROAD TIES
Gordon E. Matlock, Sullivan, and Owen T. Hornkohl, Webster Groves, both of Mo., assignors to Moehlenpah Industries, Inc., St. Louis, Mo.
Filed Sep. 12, 1980, Ser. No. 186,747
Int. Cl.[3] B27F *7/05*
U.S. Cl. 227—100 **9 Claims**

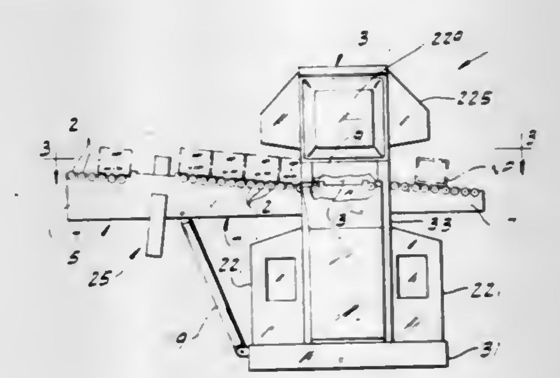

1. Apparatus for pressing nailing plates or the like into opposite ends of elongate members, such as wooden railroad ties, thereby to end-plate the ties, comprising:
a press;
infeed conveyor means for conveying said ties forwardly one after another in generally horizontal position and with the ties extending generally transversely of the direction of conveyance to a first station, constituting a feed station;
means engageable by each tie as it is conveyed forward on said infeed conveyor means for stopping the tie at said feed station;
walking beam feed means movable from a lowered position to a raised position in which it lifts the tie at said feed station and feeds it to a second station, constituting an end-plating station, in the press;
power means for moving the walking beam feed means between its raised and lowered positions;
said press comprising upper and lower platen means engageable with the top and bottom faces of a tie adjacent the ends of the tie, said lower platen means being movable through an upstroke for raising the tie while generally horizontal from a lowered position to an elevated position and for pressing the tie against said upper platen means

thereby to apply a vertical compressing force to the tie adjacent the ends thereof, and a downstroke for lowering the tie, side platen means engageable with opposite side faces of said tie adjacent the ends thereof when the tie is in said elevated position, said side platen means being movable toward and away from one another whereby a horizontal compressing force can be applied to and removed from opposite side faces of the tie adjacent the ends thereof, and a pair of end platents engageable with nailing plates on opposite ends of the tie for pressing the plates into the tie ends when the tie is in said elevated position and while said compressing forces are being applied to the tie by said upper, lower and side platen means;

walking beam discharge means movable between a lowered position and a raised position for discharging the tie from the press prior to the next tie being fed to said end-plating station;

power means for moving said walking beam discharge means between said raised and lowered positions; and

means responsive to movement of said walking beam discharge means from its lowered to its raised position for actuating said power means to move said walking beam feed means from its lowered to its raised position, said walking beam discharge means, when raised, being disposed for engagement by a tie being fed forwardly by said walking beam feed means thereby to block the tie from moving to said end-plating station prior to discharge of an end-plated tie from the press.

4,373,653

METHOD AND APPARATUS FOR ULTRASONIC BONDING

Thomas E. Salzer, Bedford, Mass., and Michael S. Masheff, St. Petersburg, Fla., assignors to Raytheon Company, Lexington, Mass.

Filed Sep. 10, 1981, Ser. No. 300,728

Int. Cl.^{3} B23K *21/02*

U.S. Cl. 228—104 **20 Claims**

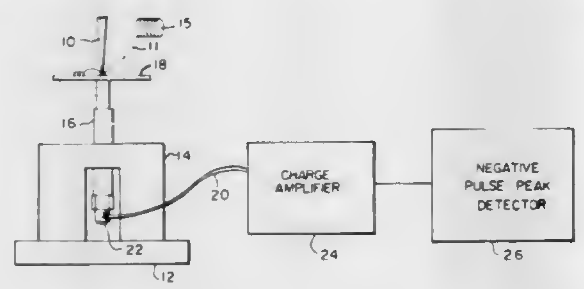

1. A method for providing high reliability ultrasonic bonds comprising the steps of:

bonding a wire to a conductive terminal using an ultrasonic bonding tool;

generating a signal corresponding to the force required to separate said tool from said wire; and

providing a display in response to said signal for supplying the operator with data relating to the quality of the bond of said wire to said conductive terminal.

13. A system for providing high reliability ultrasonic bonds comprising:

means for bonding a wire to a conductive terminal using an ultrasonic bonding tool;

means for generating a signal corresponding to the force required to separate said tool from said wire; and

means for monitoring a plurality of successive said signals for determining trends relating to the quality of bonds of said wires to said conductive terminals.

4,373,654

METHOD OF MANUFACTURING ELECTROWINNING ANODE

Raymond D. Prengaman, Arlington, and James L. Howard, Grand Prairie, both of Tex., assignors to RSR Corporation, Dallas, Tex.

Filed Nov. 28, 1980, Ser. No. 211,435

Int. Cl.^{3} B23K *31/02;* B23P *17/00;* C25C *7/02*

U.S. Cl. 228—173 R **2 Claims**

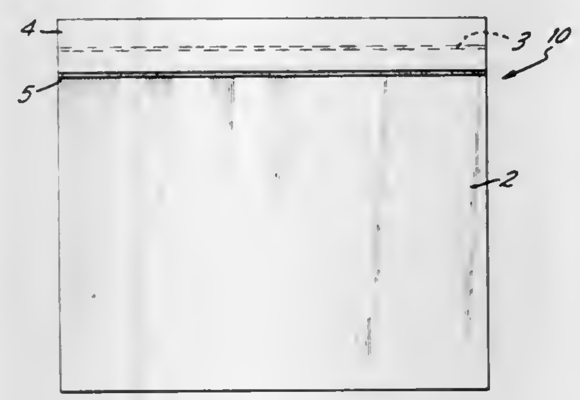

1. A method of making a lead anode for electrowinning metals comprising:

(a) forming a sheet of lead alloy anode material by hot working a billet of lead alloy at temperatures above 150° C. until uniform grain size is achieved;

(b) forming a copper bus bar with a longitudinal slot of a size such that an end of the lead alloy sheet fits tightly therewith;

(c) coating the bus bar with a lead-tin alloy;

(d) fitting said end of the lead sheet into said slot of the coated bus bar; and

(e) soldering the bus bar and lead sheet together.

4,373,655

COMPONENT MASK FOR PRINTED CIRCUIT BOARDS AND METHOD OF USE THEREOF

Joseph A. McKenzie, Jr., 6330 Laura La., Pleasanton, Calif. 94566

Filed Jun. 26, 1980, Ser. No. 163,303

Int. Cl.^{3} H05K *3/34;* B23K *31/02*

U.S. Cl. 228—180 R **10 Claims**

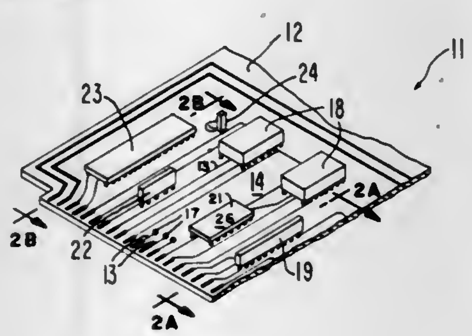

1. A component mask for preserving unoccupied lead-holes in a printed circuit board during the application of high temperature mass connection material to mass connect electronic components to said printed circuit board while permitting high temperature mass connection material to enter said lead-holes to wet their walls and form a coating of high temperature mass connection material thereon, comprising:

(A) a supporting block; and

(B) at least one pin of plastic protruding from said block, said plastic resistant to adherence to the high temperature mass connection material and capable of withstanding the temperature of the high temperature mass connection material during mass connection of electronic components to the printed circuit board, and said pin having:

(1) a cross-sectional configuration and thickness enabling the pin to fit into a lead-hole extending through a printed circuit board and occupy said lead-hole except for a clearance surrounding the pin between the pin and wall defining the lead-hole that permits high temperature mass connection material to enter said lead-hole and wet said walls; and

(2) a length at least generally equal to the thickness of said printed circuit board whereby said pin can extend completely through said lead-hole.

4,373,656

METHOD OF PRESERVING THE SOLDERABILITY OF COPPER

John L. Parker, Jr., Sandston, and Robert B. Ranes, Richmond, both of Va., assignors to Western Electric Company, Inc., New York, N.Y.

Filed Jul. 17, 1981, Ser. No. 284,044

Int. Cl.^{3} H05K *3/22*

U.S. Cl. 228—203 **16 Claims**

1. A method of preserving the solderability of a copper surface comprising:

stabilizing the surface with an aqueous solution comprising a mixture of an acid phosphate and a glycol;

treating the stabilized surface with a protective azole; and

rinsing the azole treated surface so as to remove excess azole.

4,373,657

DEVICES AND METHOD FOR DELIVERY OF SOLDER AND BRAZING MATERIAL

Marc Fillon, 120 Grande Rue, 89720 Villeblevin, France

Filed Jun. 27, 1980, Ser. No. 163,429

Int. Cl.^{3} B23K *9/12, 3/06*

U.S. Cl. 228—229 **16 Claims**

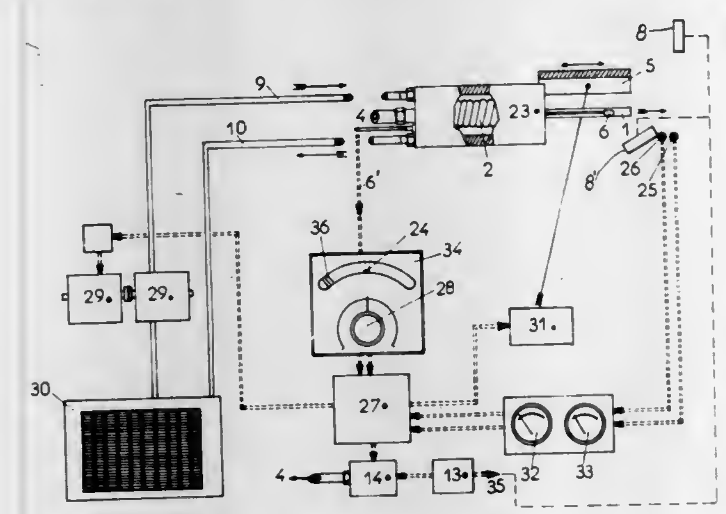

1. A device for feeding filler metal for a welding operation of the type having a burner and a means for feeding gases, comprising:

a guide body for delivering the filler metal, said guide body being exposed to the heat from the burner to preheat the filler metal in the guide body to a temperature just below its melting point, the feed of the filler metal being in response to the temperature of the filler metal in the guide body, and the operation of the burner and the feed of gases being responsive to the feed of filler metal, whereby when the feed of the filler metal stops to change the workpiece, the ignition of the burner and the feed of the gases also stops.

10. A method for feeding filler metal for a welding operation, comprising the steps of:

delivering the filler metal through a guide body, preheating the filler metal located at the end portion of the guide body to a temperature just below its melting point by exposing the said end portion of the guide body to heat from a heat supplying burner,

sensing the temperature of the filler metal at said end portion,

and setting the speed of feed of the filler metal in response to the sensed temperature.

4,373,658

HIGH PRESSURE CONDENSATION SOLDERING, FUSING OR BRAZING

Edward J. March, Lower Makefield Township, Bucks County, Pa., and Raymond J. Newman, Lawrence Township, Mercer County, N.J., assignors to Western Electric Co., Inc., New York, N.Y.

Filed Feb. 23, 1981, Ser. No. 237,204

Int. Cl.^{3} B23K *3/00;* F27D *7/02*

U.S. Cl. 228—242 **7 Claims**

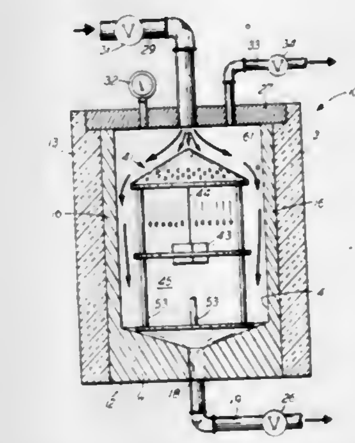

1. A method of forming a vapor processing zone, having a substantially uniform temperature distribution therein, within a high pressure steam condensation heating chamber for soldering, fusing or brazing an article therein, the method comprising the steps of:

forming a shield of steam between the chamber wall and the vapor processing zone; and

simultaneously directing high pressure steam into said processing zone at a temperature sufficient to solder, fuse or braze said article.

4,373,659

STACKABLE CARTON WITH LID

William F. Cornell, Fresno; John P. Vear, Salinas, both of Calif., and E. Anthony Pascuzzi, Arden Hills, Minn., assignors to Champion International Corporation, Stamford, Conn.

Continuation-in-part of Ser. No. 89,885, Oct. 31, 1979, abandoned, which is a continuation-in-part of Ser. No. 936,612, Aug. 24, 1978, Pat. No. 4,175,691. This application Mar. 3, 1981, Ser. No. 239,897

Int. Cl.^{3} B65D *5/26, 13/00*

U.S. Cl. 229—32 **10 Claims**

1. A closed stackable carton having a tray portion and a lid portion comprising in combination:

a tray made from a blank having a rectangular floor panel;

first and second generally rectangular tray side wall panels extending from fold lines defining a pair of opposite sides of said floor panel;

first and second pairs of tray side wall flaps extending from fold lines which define the ends of the side wall panels;

each tray side wall flap including a projection at the extreme free end defining at least a half of a tab for extending upwardly from an upper edge of said flap and a corresponding recess at the extreme free end of the lower edge of said flap in vertical alignment with said projection;

first and second generally rectangular tray end wall panels extending from fold lines defining a pair of opposite ends of said floor panel;

each of said tray end wall panels having at least one recess at

its lower edge to correspond with a recess defined in the lower edge of said tray side wall flaps in vertical alignment with said projections in the upper edges of said flaps when said tray blank is folded to form the tray of the stackable carton;

a lid made from a blank having a rectangular top panel slightly larger than the floor panel of said tray;

first and second generally rectangular lid side wall panels extending from fold lines defining a pair of opposite sides of said top panel;

first and second pairs of lid side wall flaps extending out-

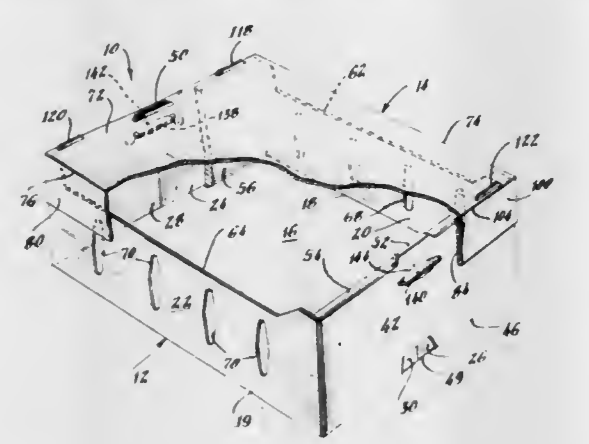

wardly from fold lines defining the ends of the lid side wall panels;

first and second lid end panels extending from fold lines defining a pair of opposite ends of said top panel;

said lid top panel having openings formed therein adjacent the lid top panel ends in alignment with said tray tabs on said end wall panels and defined by the projections on the upper edges of said side panel flaps for receiving said tray tabs when said tray blank is folded to form the tray of the stackable carton and the lid blank is folded to form the lid therefor and assembled with the tray to complete the closed restackable carton.

4,373,660
CONTAINER
Richard Wytko, Olympia, Wash., assignor to Weyerhaeuser Company, Tacoma, Wash.
Continuation-in-part of Ser. No. 284,426, Jul. 20, 1981, abandoned. This application Mar. 17, 1982, Ser. No. 358,981
Int. Cl.³ B65D *5/10, 5/22, 5/66*
U.S. Cl. 229—39 R **7 Claims**

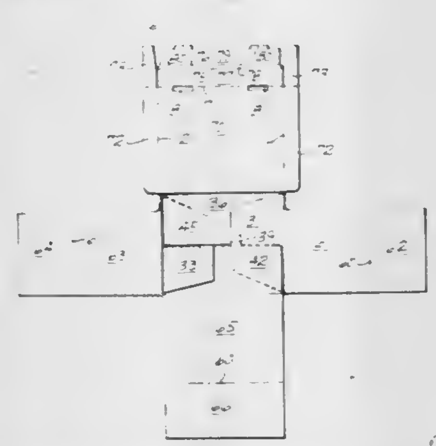

5. A container comprising a first, second, third and fourth panels serially connected by score lines,

means for connecting said first and fourth panels,

two of said first, second, third and fourth panels being opposed side walls of the container,

the other two of said first, second, third and fourth panels being opposed front and back walls of the container,

a bottom closure extending along the lower edge of said first, second, third and fourth panels,

said bottom closure including opposed truncated panels extending from said opposed side walls and opposed rectangular panels extending from said front and back walls respectfully, each said rectangular panel extending beyond the major axis of the container bottom and includes a converging recess at the midpoint of its outer free edge and a diagonal score line extending inwardly from said recess thereby forming a fold back section, said fold back sections adhesively secured to the adjacent truncated panel, said bottom panel being secured with the engagement of said recesses,

a front reinforcing panel hingedly attached to the upper edge of said front panel extending into said container in contact with the inner face of said front panel,

side reinforcing panels hinged to the upper edges of said side panels and extending downwardly into the container in contact with the inner face of said side panels, and

a cover panel extending from the upper edge of said back panel, front and side panels extending downwardly from said cover panel, said front and side cover panels being attached, bottom reinforcing panels hinged to the lower edges of said front and side reinforcing panels, each said bottom reinforcing panel being rectangularly shaped and of equal length and extending normal to respective front and side reinforcing panels a distance such that opposed bottom reinforcing panels overlap each other.

4,373,661
CARTON WITH INSPECTION FLAP AND EASY OPENING FEATURES AND BLANKS THEREFOR
Burton R. Lundquist, Pinnacle Peak, and Thomas A. Kozlowski, Phoenix, both of Ariz., assignors to Armour and Company, Phoenix, Ariz.
Filed May 17, 1978, Ser. No. 906,542
Int. Cl.³ B65D *5/42*
U.S. Cl. 229—87 F **4 Claims**

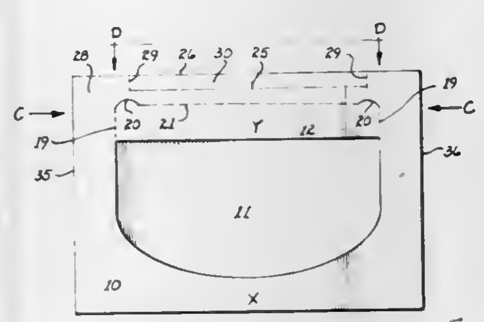

1. In a carton blank for constructing a carton for displaying a product such as bacon, wherein the blank is comprised of:

a. a top panel having a cut-out viewing area,

b. a bottom panel and side walls,

c. a glue flap,

d. an edge section of the top panel being located between the cut-out viewing area and the one edge of the top panel adjacent to the cut-out viewing area and having substantially the same width as the glue flap,

e. an inspection flap covering at least a portion of the cut-out viewing area and hingedly connected to the edge section of the top panel along a hinge line and having sides connected to the top panel by lines of weakness,

f. at least one scoring line adjacent a ply-separation area designed to provide easy opening of the carton,

the invention comprising an arrangement wherein a single scoring line is located in the edge section adjacent to the inspection flap and defines the edge of a ply-separation area along which the glue flap attaches, said scoring line being no longer in length than the distance across the inspection flap between said lines of weakness and lying within an area bounded by the ends of said inspection flap, so that the lines of force initially created by lifting said inspection flap in an upward manner do not intersect said ply-separation area located in said edge section,

4,373,662
INTEGRATED CONTROL SYSTEM USING A MICROPROCESSOR
William W. Bassett, Wayzata, and Dean R. Rask, Minneapolis, both of Minn., assignors to Honeywell Inc., Minneapolis, Minn.
Filed Oct. 17, 1980, Ser. No. 197,841
Int. Cl.³ F24D *5/10;* **G05D** *23/00*
U.S. Cl. 236—10 **1 Claim**

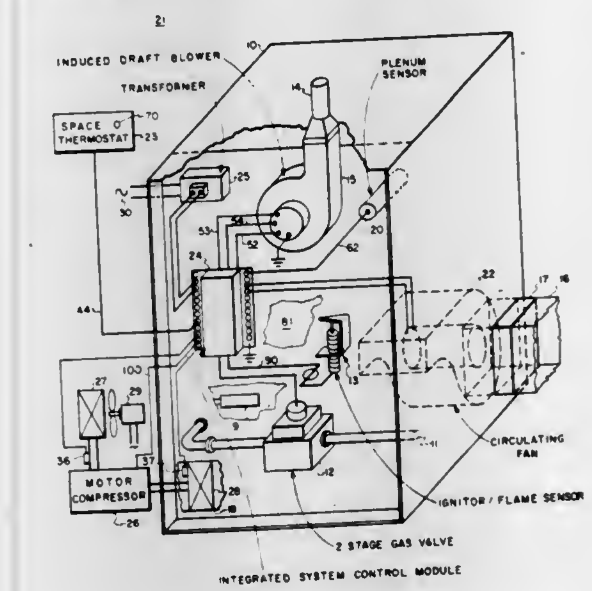

1. In a temperature control system for a temperature changing apparatus delivering temperature conditioned air from a plenum by an air blower to a space comprising

space temperature responsive means adapted to respond to the temperature in the space,

control means adapted to control the temperature conditioning apparatus,

means connecting said space temperature responsive means to said control means to maintain a predetermined temperature in the space,

operating output temperature responsive means adapted to respond to the output temperature of the conditioned air,

means connecting said operating output temperature responsive means to said control means for detecting an abnormal operation of the temperature conditioning apparatus upon an abnormal increase in the output temperature, wherein said output responsive means upon a first increase to a first predetermined output in operating output, provides a visual indication of said first output, upon a second increase to a second predetermined output in operating output, provides a signal to said control means to reduce the operation of the temperature conditioning apparatus, and upon a third increase to a third predetermined output in operating output, provides a turning off operation.

4,373,663
CONDITION CONTROL SYSTEM FOR EFFICIENT TRANSFER OF ENERGY TO AND FROM A WORKING FLUID
Jeffrey M. Hammer, St. Louis Park, Minn., assignor to Honeywell Inc., Minneapolis, Minn.
Filed Dec. 10, 1981, Ser. No. 329,147
Int. Cl.³ F23N *1/00;* **G06F** *15/20*
U.S. Cl. 236—15 R **20 Claims**

1. A condition control system adapted to control a system for modifying a working fluid by controlling the transfer of energy to and from said working fluid at varying rates including a fixed lower on rate, a fixed upper rate, and a modulating rate between said two fixed rates, including: condition sensor means including output means responsive to the condition of said working fluid; setpoint means having at least two operating modes and including adjustable input means to set a level of operation for said system; said setpoint means including system responsive input means, and having output means which is dependent upon said adjustable input means and said system responsive input means to determine which of said operating modes is provided to control said setpoint output means; said setpoint output means being combined with said condition sensor output means to provide a preliminary error signal; off-on error detection means connected to receive said preliminary error signal and having output means providing an off-on output control signal; condition control sequencer means connected to control said system between an off state and said fixed upper rate to modify said working fluid with said on-off error detection output means controlling said sequencer means between said off state and said lower on rate; error signal processing means connected to said preliminary error signal and having error signal output means and further having integrated output signal means; combining means connected to said error signal output means and to said integrated output signal means to provide a sequencer command output signal capable of operating said sequencer means from said lower on

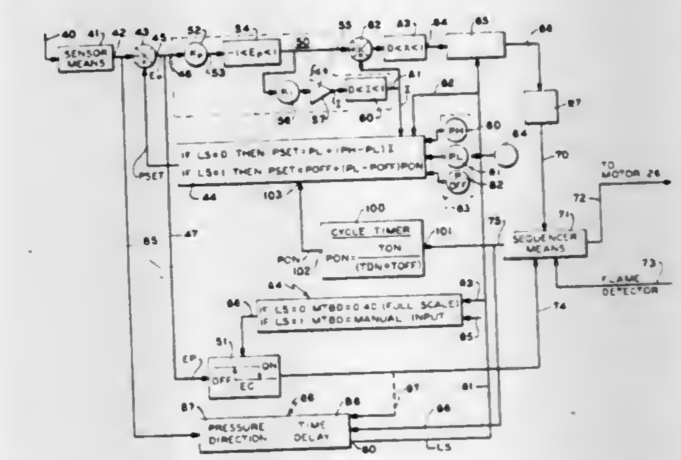

state to said fixed upper rate; said integrated output signal means further connected to said setpoint means to affect a first of said operating modes of said setpoint means; responsive means having input means connected to said condition sensor output means and having further input means responsive to said on-off error detector means; said load responsive means having switched output means that acts as a limit for said system; said switched output means connected to said setpoint system responsive input means to select one of said operating modes; gate means controlled by said switched output means to in turn control the connection of said sequencer command output signal means to said sequencer means; and cycle timer means having an input responsive to said sequencer means wherein said off-on error detection means provides the operating time of said system, and an output connected to said setpoint means to determine an operating level of said setpoint means to affect a second of said modes of said setpoint means operation.

4,373,664
WALL THERMOSTAT AND THE LIKE
Charles E. Barker; Anthony C. Cairo; Frederick T. Bauer, all of Holland, Mich., and Auzville Jackson, Jr., Richmond, Va., assignors to Robertshaw Controls Company, Richmond, Va.
Division of Ser. No. 116,959, Jan. 30, 1980, Pat. No. 4,319,711, which is a continuation of Ser. No. 840,582, Oct. 11, 1977, abandoned. This application May 14, 1981, Ser. No. 263,730
Int. Cl.³ F23N *5/20;* **G08B** *23/00*
U.S. Cl. 236—46 R **9 Claims**

1. An ambient air unitary self contained wall thermostat comprising:

ambient air temperature sensing providing analog signals indicative of actual temperature in an enclosed zone;

analog to digital conversion means for converting said signals indicative of actual temperature to binary encoded form;

means for storing a desired temperature in binary encoded form;

means for manually entering said desired temperature into said means for storing;
means for comparing said binary encoded signals indicative of actual desired temperatures and for providing an actuating signal to a heating or cooling source to conform said actual temperature to said desired temperature;
means for selectively suppressing response to prevent mis-

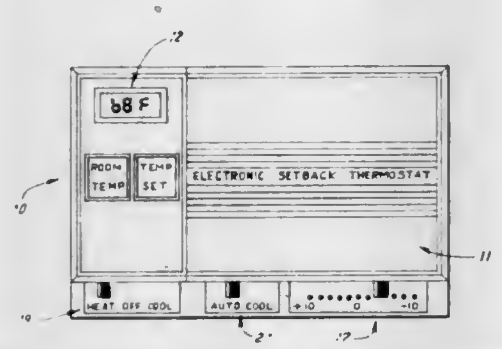

leading transitory excursions of sensed temperature from average actual zone temperature; and
means responsive to the provisions of said actuating signal for determining the predicted time of coincidence of said actual temperature with said desired temperature in response to operation of said heating or cooling source and for responsively terminating generation of said actuating signal.

4,373,665
DEFORMABLE LIGHT-WEIGHT HOUSING STRUCTURE
Kurt Dietzsch, Leonberg-Eltingen, Fed. Rep. of Germany, assignor to Sueddeutsche Kuehlerfabrik Julius Fr. Behr GmbH & Co. KG, Stuttgart, Fed. Rep. of Germany
Filed Dec. 20, 1979, Ser. No. 105,498
Claims priority, application Fed. Rep. of Germany, Dec. 23, 1978, 2856031
Int. Cl.³ B62D *25/00;* **B60H** *1/02*
U.S. Cl. 237—12.3 A **7 Claims**

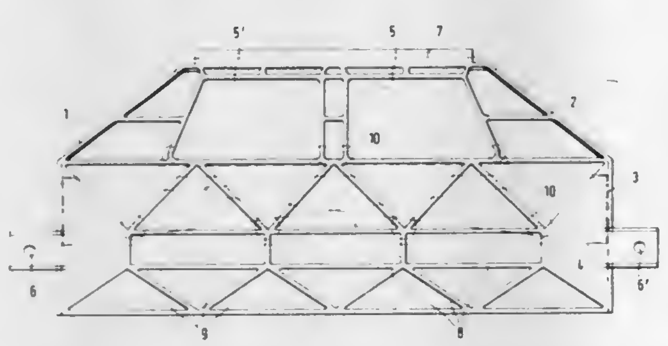

1. A light-weight deformable air-conducting housing for use as a collapsing component in a vehicle, comprising:
a load-bearing latice structure comprising a plurality of elongated members of a first thickness interconnected together in a rigid truss-like configuration having a predetermined axis of collapse and a plurality of open spaces between said elongated members;
a non-load-bearing skin of a second thickness which is smaller than said first thickness of said elongated members, said skin closing in an airtight manner the open spaces between said elongated members and defining therein at least one air inlet and at least one air outlet;
means on said housing for attaching said lattice structure to the body of a vehicle so that said predetermined axis of collapse of said housing coincides substantially with the longitudinal axis of the vehicle; and
wherein said housing comprises a heater housing attached beneath the dashboard of a vehicle and contains a heater positioned therein.

4,373,666
ENGINE COOLING-PASSENGER HEATING SYSTEM
Donald L. Williams, Port Clinton, Ohio, assignor to General Motors Corporation, Detroit, Mich.
Filed Jun. 26, 1981, Ser. No. 277,869
Int. Cl.³ B60H *1/02*
U.S. Cl. 237—12.3 B **3 Claims**

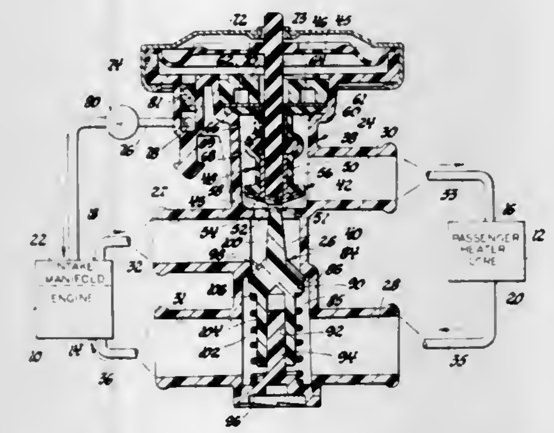

1. An engine cooling-passenger heating system comprising an engine and a passenger heater each having an inlet and outlet for a cooling-heating liquid wherein the engine outlet to the heater is at a liquid jacketed intake manifold on the engine, and multi-mode valve means for connecting said engine outlet to said engine inlet to thereby bypass all liquid flow past said passenger heater for a no-heat mode while maintaining flow circulation through the jacketed intake manifold and alternatively connecting said engine outlet to said heater inlet and said heater outlet to said engine inlet to thereby effect flow through said heater for a heat mode while also being responsive to pressure drop across said heater above a predetermined value to also simultaneously establish in said heat mode a restricted connection between said engine outlet and said engine inlet to thereby effect limited bypass flow past and limited flow through said heater to maintain circulation through the jacketed intake manifold while minimizing the strength requirements of the heater.

4,373,667
DEVICES FOR ELASTICALLY FASTENING RAIL-WAY RAILS BY LOCKING
Michel Duchemin, Lambres Lez Douai, France, assignor to Ressorts Industrie, Paris, France
Filed Sep. 29, 1980, Ser. No. 191,765
Claims priority, application France, Oct. 2, 1979, 79 24530
Int. Cl.³ E01B *9/30*
U.S. Cl. 238—349 **4 Claims**

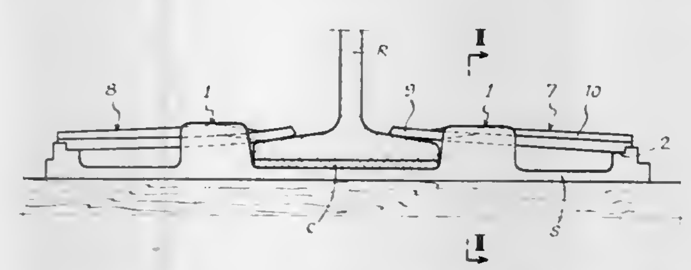

1. A device for elastically fastening a rail having a flange portion to a support, comprising:
tie plate means secured to said support and including two lobe means defining a support area on which said flange portion is adapted to be supported, each lobe means including a groove, and at least one end support positioned remotely with respect to said rail; and
two clip means, each engageable between said flange portion and said at least one end support, each including a resilient portion engageable with said flange portion and a rigid

portion, the latter rigid portion including two side portions slidably receivable within a respective one of said grooves, a rigidifying middle portion, a first end engageable with said at least one end support and a second opposite end positioned at least immediately adjacent said flange portion.

4,373,668
SPREADER CONTROL
Donald R. Forbes, Rte. 107, Raymond Rd., Deerfield, N.H. 03037, and Edson A. Forbes, 12 D'Angelo Rd., Wayland, Mass. 01778
Filed Jun. 6, 1980, Ser. No. 156,925
Int. Cl.³ A01C *17/00*
U.S. Cl. 239—74 **10 Claims**

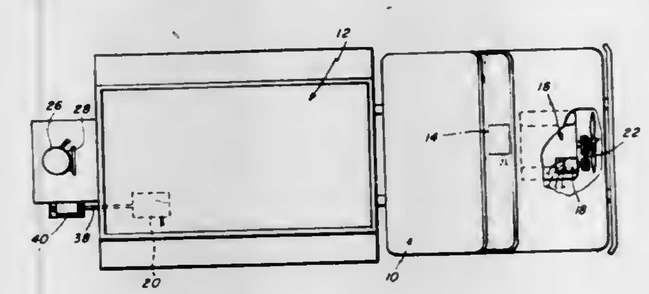

1. Spreader control system for a vehicle having an internal combustion engine and a conveyor means for a product that is to be spread leading to a spreader, said system comprising;
electrical spreader motor,
means for mounting the spreader motor at a rear of the vehicle adjacent the conveyor means for operating the vehicle spreader,
electrical conveyor motor,
means for mounting the conveyor motor for driving the conveyor motor,
first control means including means for controlling the electrical spreader motor comprising manually settable adjustment means for controlling spreader motor speed independent of conveyor motor speed,
and second control means for controlling the electrical conveyor motor, including alternator power means operated from the vehicle internal combustion engine and means for controlling the alternator power means output to the electrical conveyor motor,
wherein said second control means includes a computer, mode control means having a manual position and an automatic position, means coupling the mode control means to the computer, said computer having a control output line, means coupling the computer output line to a control winding of the alternator power means, said mode control means in its manual position providing a preset frequency signal for controlling the conveyor motor at a set revolution per time, means for sensing vehicle speed, said mode control means in its automatic position providing a control signal to the conveyor motor to operate the conveyor motor as a speed which is a function of both a preset signal and the vehicle speed signal.

4,373,669
HYDRAULIC DRIVE FOR AN AGRICULTURAL SPRAYER
William C. Swanson, Clarendon Hills, Ill., assignor to International Harvester Co., Chicago, Ill.
Filed Nov. 28, 1980, Ser. No. 210,984
Int. Cl.³ B05B *9/04*
U.S. Cl. 239—124 **4 Claims**

1. In an agricultural vehicle with a hydraulic system adapted for use as a liquid dispensing sprayer, a sprayer hydraulic drive comprising:
an independent hydraulic source circuit including at least a pump and a reservoir;
valve means interconnecting said circuit with a sprayer pump circuit facilitating activation and deactivation of said sprayer pump circuit for various modes of operation;
a rotary flow divider operatively connected with said valve means and including a motor rotor linked with a pump rotor via a shaft;
said pump rotor hydraulically connected with and driving a sprayer motor;

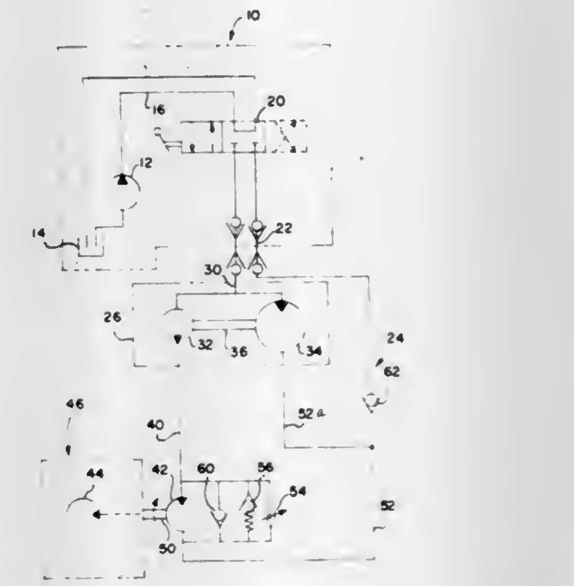

said sprayer motor driving a centrifugal pump of said liquid dispensing sprayer; and
pressure relief means for bypassing said sprayer motor and merging with a sprayer pump circuit return line linked with said motor rotor.

4,373,670
APPARATUS FOR APPLYING ROAD MARKING MATERIALS TO ROADWAYS
David N. Kilner, Horsham, England, assignor to Prismo Universal Limited, Surrey, England
Filed Jul. 30, 1981, Ser. No. 288,334
Claims priority, application United Kingdom, Jul. 30, 1980, 8024894
Int. Cl.³ B05B *1/20;* **A01G** *25/09;* **E01C** *19/16;* **E01H** *3/02*
U.S. Cl. 239—172 **6 Claims**

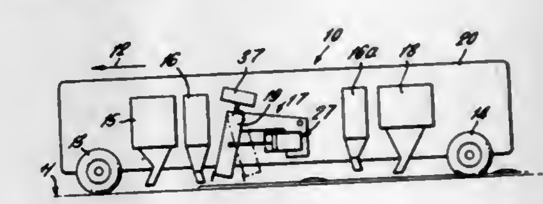

1. Apparatus for applying road marking material to a trafficable surface of a roadway comprising a vehicle, ejector means mounted on the vehicle and operable to deliver discrete blobs of a fluid road marking material directly onto a said surface from a delivery port of the ejector means, and a ram connected between the ejector means and a part of the vehicle for moving the ejector means relative to the vehicle during ejection so that, in use, when the vehicle is propelled along a roadway the speed of the delivery port relative to the roadway during delivery of the blobs is reduced.

4,373,671
ELECTROMAGNETIC FUEL INJECTOR
Dante S. Giardini, Dearborn Hgts., Mich., assignor to Ford Motor Company, Dearborn, Mich.
Filed Apr. 13, 1981, Ser. No. 253,458
Int. Cl.³ B05B *1/30*
U.S. Cl. 239—585 **19 Claims**

1. A fuel injector for use in a combustion chamber of an internal combustion engine; said injector characterized by:

a housing having a cavity therein with a fuel outlet orifice and a fuel inlet port being in communication with said cavity;
a fuel flow control valve moveable to block or permit fuel flow through the orifice;
a fuel flow control valve spring means for moving said valve to a closed position;
a fuel displacement means in said cavity and dividing said cavity into first and second sections, said first section being in pressure communication with said combustion chamber and said second section in communication with said fuel flow control valve;
a one-way check valve mounted at said inlet port, said check valve being able to open to permit an inflow of fuel into said second section of said cavity and being able to close to permit a buildup of pressure in said other section of said cavity when the control valve is in its closed position;
an electromagnetic assembly mounted within said housing having a coil and armature;

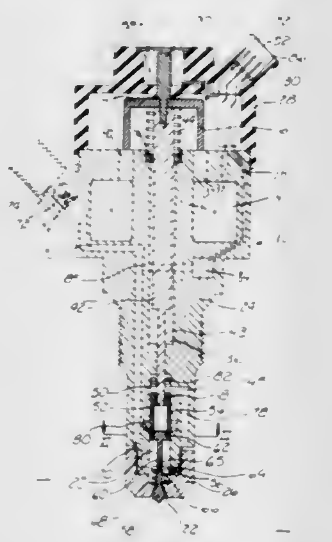

said housing defining first and second substantially parallel pole surfaces defining a gap adjacent said coil;
a magnetic field passing transversely through said gap when said coil is energized;
said armature received in said gap;
said armature being connected to said fluid driving means;
an armature spring means urging said armature to a first position;
said armature being moveable to a second position when said coil is energized to operably move said fuel displacement means to displace the fuel which opens said fuel flow control valve;
combustion chamber pressure in said first section applying a force on said displacement means to displace said fuel within said second section; said force counteracting in part any force exerted by the combustion chamber pressures on said valve and on fuel within said second section when said valve is open that works against displacing of fuel by said displacement means.

4,373,672

ROTARY TYPE ELECTROSTATIC SPRAY PAINTING DEVICE

Teru Morishita, Shizuoka; Yoshimichi Ishioka, Susono, and Toshikazu Suzuki, Toyota, all of Japan, assignors to Toyota Jidosha Kogyo Kabushiki Kaisha, Toyota, Japan

Filed Jan. 29, 1981, Ser. No. 230,112
Claims priority, application Japan, Aug. 6, 1980, 55-107075
Int. Cl.³ B05B *5/04;* **F16C** *32/06*
U.S. Cl. 239—703 **18 Claims**

1. A rotary type electrostatic spray painting device comprising:
a metallic housing;
a metallic rotary shaft rotatably arranged in said housing and having an axis of rotation, a front end, and a rear end;
a cup-shaped metallic spray head fixed onto said front end of said rotary shaft and comprising a spray head supporting member which has a cylindrical outer circumferential wall, and a spray head body which has a cup-shaped inner wall and a cylindrical inner circumferential wall fitted onto said cylindrical outer circumferential wall of said spray head supporting member, said cylindrical inner circumferential wall of said spray head body having a radially inwardly projecting annular projection which is arranged at a location which is rearwardly distal with respect to said cup-shaped inner wall and has a rear end face directed to said rear end of said metallic housing, said cylindrical outer circumferential wall of said spray head supporting member having a thin extending portion which extends towards said rear end of said metallic housing and defines at least a portion of an annular groove fitted onto said annular projection, said thin extending portion having a rear end which is radially outwardly bent onto said rear end face of said annular projection for securing said spray head body to said spray head supporting member;

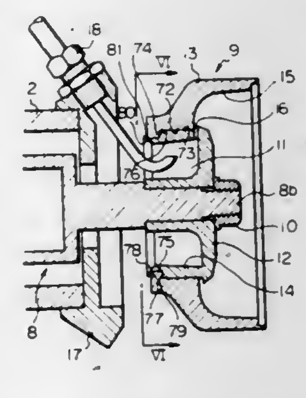

feeding means for feeding a paint onto said cup-shaped inner wall;
drive means cooperating with said metallic rotary shaft for rotating said metallic rotary shaft;
non-contact type radial bearing means arranged in said metallic housing and cooperating with said metallic rotary shaft for radially supporting said metallic rotary shaft under a non-contacting state;
non-contact type thrust bearing means arranged in said metallic housing and cooperating with said metallic rotary shaft for axially supporting said metallic rotary shaft under a non-contacting state;
terminal means for receiving a negative high voltage, said terminal means being connected to said metallic housing, and;
electrode means arranged in said metallic housing and electrically connecting said terminal means and said cup-shaped metallic spray head.

4,373,673

ROTARY TYPE ELECTROSTATIC SPRAY PAINTING DEVICE

Teru Morishita, Shizuoka; Matuyosi Sugiyama; Akira Sato, both of Susono, and Toshikazu Suzuki, Toyota, all of Japan, assignors to Toyota Jidosha Kogyo Kabushiki Kaisha, Toyota, Japan

Filed Jul. 9, 1980, Ser. No. 167,331
Claims priority, application Japan, Feb. 19, 1980, 55-18451
Int. Cl.³ B05B *5/04;* **F16C** *32/04, 32/06*
U.S. Cl. 239—703 **15 Claims**

1. A rotary type electrostatic spray painting device comprising:
a metallic housing;
a metallic rotary shaft rotatably arranged in said metallic housing and having a front end and a rear end, said rotary shaft further having a hollow shaft portion having a first diameter, said hollow shaft portion being axially contiguous with a solid shaft portion having a second diameter, said first diameter being larger than said second diameter;

a cup shaped metallic spray head fixed onto the front end of said rotary shaft and having a cup shaped inner wall;
feeding means for feeding a paint onto said cup shaped inner wall;
drive means cooperating with said rotary shaft for rotating said rotary shaft;
non-contact type radial bearing means arranged in said metallic housing and arranged with respect to said metallic rotary shaft so as to be adjacent to said hollow shaft portion of said rotary shaft for radially supporting said rotary shaft under a non-contacting state;

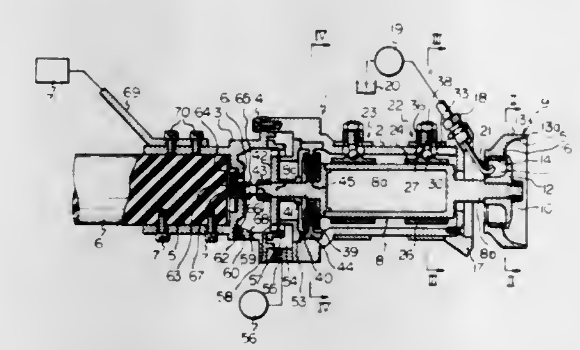

non-contact type thrust magnetic bearing means arranged in said metallic housing and arranged with respect to said metallic rotary shaft so as to be adjacent to said solid shaft portion for axially supporting said metallic rotary shaft under a non-contacting state;
terminal means for receiving a negative high voltage, said terminal means being connected to said housing; and
electrode means arranged in said housing and electrically connecting said terminal means to said spray head.

4,373,674

CRUSHING METHOD AND APPARATUS

Marion Barrera, P.O. Box 185, Fort Thomas, Ariz. 85536, and Raymond Godfrey, 617 3rd St., Safford, Ariz. 85546

Continuation-in-part of Ser. No. 12,022, Feb. 14, 1979, abandoned. This application Aug. 18, 1980, Ser. No. 178,957
Int. Cl.³ B02C *19/08, 1/00*
U.S. Cl. 241—15 **12 Claims**

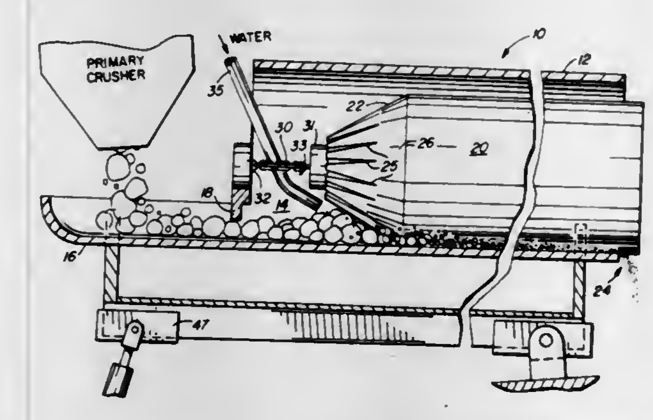

1. An apparatus for crushing and/or pulverizing materials comprising:
(a) a generally cylindrical elongate mortar member defining an interior crushing chamber having an inlet and a discharge;
(b) an elongate pestle within said chamber secured therein independent of said mortar, said pestle being provided with a head end adjacent the said inlet which diverges generally outwardly from the inlet end towards the discharge end, said head end further being provided with grooves therein; and
(c) means for imparting a rocking motion to said mortar.

4,373,675

METHOD FOR BENEFICIATING DUCTILE SCRAP METAL

Sydney M. Kaufman, Livonia, Mich., assignor to Ford Motor Company, Dearborn, Mich.

Filed Nov. 17, 1980, Ser. No. 207,176
Int. Cl.³ B02C *17/00*
U.S. Cl. 241—23 **14 Claims**

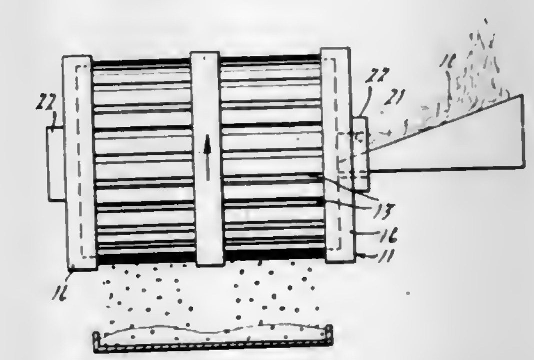

1. A method of hammering ductile tangled ribbons of machining scrap into a densified intermediate product, comprising:
(a) subjecting a collection of said ductile tangled ribbons of machining scrap having a packing density of less than 50 lbs. per cubic foot to impacting forces between weighted, freely moving elements and an anvil means, said impacting forces being applied to progressively flatten said scrap;
(b) repeating said impacting until said machining scrap is comprised of a collection of substantially flattened fragmented ribbons having a packing density in excess of 90 lbs. per cubic foot.

4,373,676

WASTE FOOD DISPOSAL SYSTEM

George O. Sherman, Jr., Prairie Village, Kans., assignor to Salvajor Company, Kansas City, Mo.

Filed Nov. 24, 1980, Ser. No. 209,883
Int. Cl.³ B02C *25/00, 23/36*
U.S. Cl. 241—36 **9 Claims**

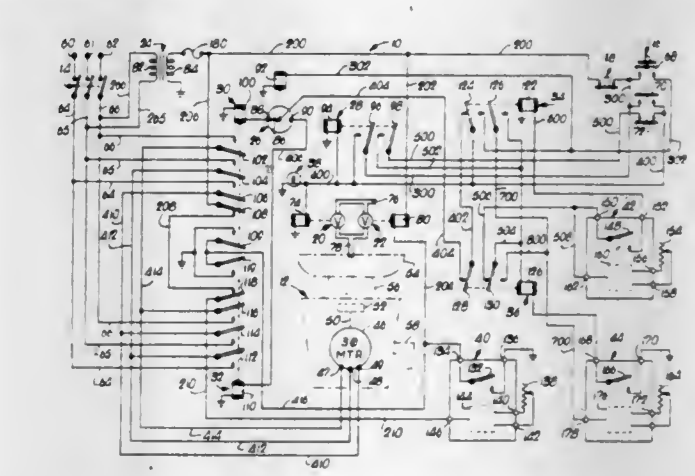

1. In a disposal system for waste food materials or the like having:
disposer means, including inlet means adapted for receiving waste materials and water, shiftable comminuting means adapted when shifted for comminuting said materials in the presence of said water, electric motor means operably coupled with said comminuting means and adapted when electrically energized for operating to shift said comminuting means, and outlet means adapted for discharging said water and said materials comminuted by said comminuting means to a sewer or the like;
water supply means for supplying water to said disposer means for lubricating, flushing and cooling the latter, including first valve means having open and closed states,

adapted when in said open state thereof for permitting flow of water at a first predetermined rate from a source thereof to said inlet means and adapted when in said closed state thereof for blocking said flow of water at said first rate, and first electrically responsive valve operating means operably coupled with said first valve means, having first and second states of actuation dependent upon the condition of absence or presence of electrical energization applied thereto, adapted when in said first state of actuation thereof for placing said first valve means in said closed state of the latter and adapted when in said second state thereof for placing said first valve means in said open state of the latter; and

power controlling means for influencing the energization states of said disposer means and said water supply means, including motor switching means having open and closed states, adapted for being electrically coupled in series between said motor means and a source of electrical energizing power for the latter, adapted when in said open state thereof for deenergizing said motor means and adapted when in said closed state thereof for electrically coupling said motor means with said source of electrical energizing power therefor, valve switching means having open and closed states, adapted for being electrically coupled in series between said first valve operating means and a source of electrical energizing power for the latter, adapted when in said open state thereof for placing said first valve operating means in said first state of actuation of the latter to close said first valve means and adapted when in said closed state thereof for placing said first valve operating means in said second state of actuation thereof to open said first valve means, and first electrically responsive motor and valve control means operably coupled with said motor switching means and said valve switching means, having first and second states of actuation dependent upon the condition of absence or presence of electrical energization applied thereto, adapted when in said first state of actuation thereof for placing said motor switching means and said valve switching means in said open states of the latter to deactivate said motor means and close said first valve means and adapted when in said second state of actuation thereof for placing said motor switching means and said valve switching means in said closed states of the latter to operate said motor means and open said first valve means;

improved means for the coordinated control of said disposer means, said water supply means and said power controlling means, including:

first timed switching means, including first switched path means having open and closed states, and first electrically responsive timing and controlling means operably coupled with said first switching path means, provided with first control terminal means and adapted when an electrical triggering signal is applied to said first control terminal means while said first switched path means is in said closed state thereof comprising its normal standby state for placing said first switched path means in said open state thereof for a predetermined period of time and then restoring said first switched path to said closed state thereof at the end of said period of time;

second timed switching means, including second switched path means having open and closed states, and second electrically responsive timing and contolling means operably coupled with said second switching path means, provided with second control terminal means and adapted when an electrical triggering signal is applied to said second control terminal means while said second switched path means is in said open state thereof comprising its normal standby state for placing said second switched path means in said closed state thereof for a predetermined interval of time and then restoring said second switched path means to said open state thereof at the end of said interval of time;

first electric control means, including first and second control switch means each having open and closed states, and first electrically responsive actuator means operably coupled with said first and second control switch means, having first and second states of actuation thereof dependent upon the condition of absence or presence of electrical energization applied thereto, adapted when in said first state of actuation thereof comprising its normal standby state for placing said first control switch means in said open state of the latter and said second control switch means in said closed state of the latter and adapted when in said second state of actuation thereof for placing said first control switch means in said closed state of the latter and said second control switch means in said open state of the latter;

second electric control means, including third and fourth control switch means each having open and closed states, and second electrically responsive actuator means operably coupled with said third and fourth control switch means, having first and second states of actuation dependent upon the condition of absence or presence of electrical energization applied thereto, adapted when in said first state of actuation thereof comprising its normal standby state for placing said third control switch means in said closed state of the latter and said fourth control switch means in said closed state of the latter and adapted when in said second state of actuation thereof for placing said third control switch means in said open state of the latter and said fourth control switch means in said open state of the latter;

first electrical circuit means having said third control switch means in series therewith adapted for electrically coupling said first control terminal means with a source of electrical control power;

second electrical circuit means having said first control switch means in series therewith adapted for electrically coupling said second control terminal means with a source of electrical control power;

third electrical circuit means having said third control switch means and said first switched path means in series therewith adapted for electrically coupling said first actuator means with a source of electrical control power;

fourth electrical circuit means having said second switched path means in series therewith adapted for electrically coupling said second actuator means with a source of electrical control power; and

fifth electrical circuit means having said second and fourth control switch means in series therewith adapted for electrically coupling said first motor and valve control means with a source of electrical control power.

4,373,677

SAFETY DEVICE FOR ELECTRIC MOTOR DRIVEN KITCHEN UTENSILS

Yukitoshi Kunihiro, Toyonaka, Japan, assignor to Matsushita Electric Industrial Co., Ltd., Osaka, Japan

Filed Nov. 3, 1980, Ser. No. 203,148

Claims priority, application Japan, Nov. 24, 1979, 54-152319

Int. Cl.³ B02C ***18/12***

U.S. Cl. 241—37.5 **9 Claims**

1. A safety device for kitchen utensils comprising
a body containing an electric motor,
a container mounted on said body,
a cutter provided in said container and driven by said electric motor,
a container lid to cover said container, and
a switch device to control electrification of said electric motor by operation of its buttons,
said lid of said container having on its periphery an interlocking member,
said body having a cradle means which is journaled thereon, is to be driven by said interlocking member and controls motion of a slider of said switch device, which slider prohibits closing of said switch device at its first position thereof and allows closing of said switch at its second position which is defined by an engagement of said interlocking member with said cradle means at placing of said container lid to correctly cover said container, said container lid being removable irrespective of positions of said switch device, closing of said switch device being released upon removal of said container lid.

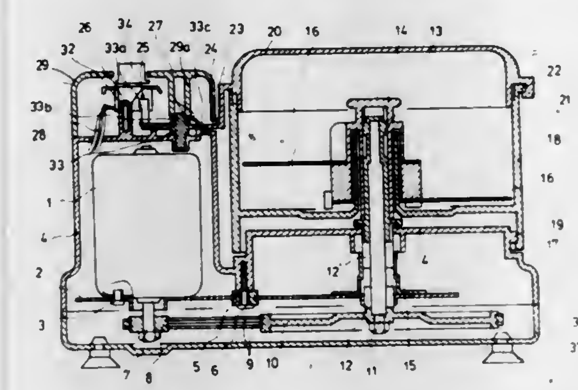

4,373,678

ROTARY IMPACT CRUSHER HAVING A CONTINUOUS ROTARY CIRCUMFERENCE

Guenther W. Reitter, 2811 Meriln Rd., Camp Hill, Pa. 17011

Filed Jun. 30, 1980, Ser. No. 163,956

Int. Cl.³ B02C ***13/28***

U.S. Cl. 241—189 R **6 Claims**

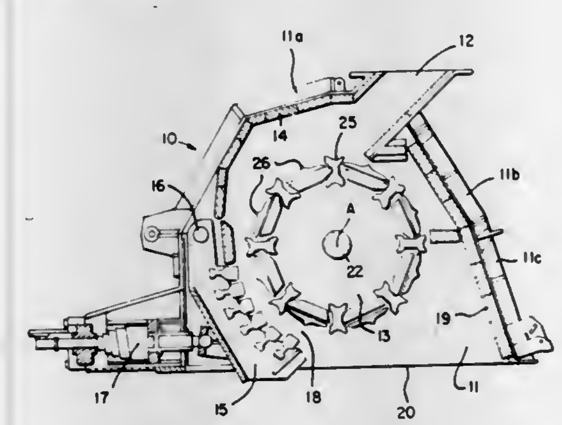

1. A rotary impact crusher impeller having a drive shaft, two spaced shaft plates mounted on the shaft and extending radially outwardly of the shaft, impeller blade recess in the periphery of each shaft plate, a plurality of impeller blades spaced around the periphery of each shaft plate with each blade extending through an impeller blade recess in each shaft plate and the longitudinal axis of the blade generally parallel to the axis of the rotary shaft, wherein the improvement comprises a plurality of peripheral plates each having a radial inner surface, each peripheral plate overlying the opening between two adjacent impeller blades and the spaced shaft plates, the radial inner surfaces of the peripheral plates resting upon the outer peripheral surfaces of the shaft plates between the adjacent impeller blades, a mounting member on the radial inner surface of each peripheral plate and removable mounting means engageable with the mounting members for securing the peripheral plates to the impeller against centrifugal forces wherein the impeller blades and peripheral plates form an essentially continuous surface extending around the impeller for preventing work from falling into the impeller interior during low-speed crushing.

4,373,679

IMPACT TYPE CRUSHER

Yoshihiko Kawano. Honami; Hirosi Adachi, Iizuka; Masakazu Watanuki, Iizuka, and Takashi Ueno, Iizuka, all of Japan, assignors to Kobukura Iron Works Co., Ltd., Fukuoka, Japan

Filed Jul. 22, 1980, Ser. No. 171,822

Claims priority, application Japan, Jul. 23, 1979, 54-94671; Jul. 25, 1979, 54-95267; Jul. 26, 1979, 54-104570[U]

Int. Cl.³ B02C ***13/09***

U.S. Cl. 241—275 **15 Claims**

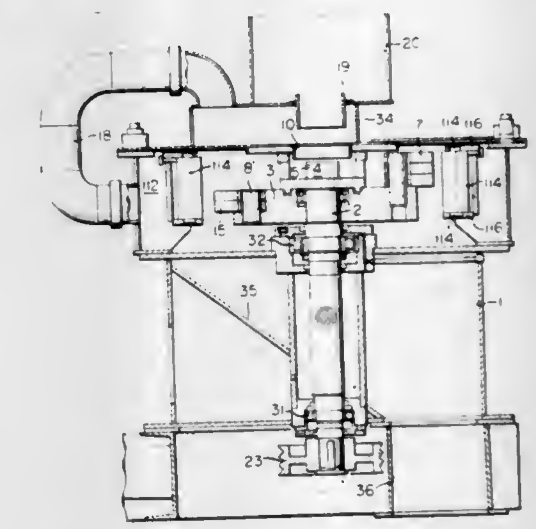

1. A crusher comprising a frame having a substantially closed hollow cylindrical form with a raw material supply orifice being formed in its upper wall, a vertical rotary shaft rotatively supported within said frame below said raw material supply orifice, a horizontal motor mounted within said frame at the upper end of said rotary shaft for rotation in a rotational direction, a hollow rotary cylinder having a peripheral wall mounted within said frame to the upper surface of said rotor centrally thereof, said hollow rotary cylinder having an outer peripheral surface spaced from the inner cylindrical surface of said frame, being opened at its upper end below said raw material supply orifice and having a bottom closing its bottom end, said peripheral wall of said hollow rotary cylinder having at least one slot for ejecting therethrough by centrifugal force into an ejection space raw material fed onto said bottom, and at least one main striking member mounted to said rotor outside said hollow rotary cylinder, spaced from said outer peripheral wall of said hollow rotary cylinder to define therebetween the cylindrical raw material ejection space, the radial width of said ejection space being much greater than the thickness of said peripheral wall and having a striking surface facing towards said rotational direction of said rotor such that said raw material ejected through said slot impinges upon said striking surface during its movement through said raw material ejection space.

4,373,680

COILING PROCESS AND APPARATUS BY RADIALLY WINDING A FILAMENT

Jacques Polge, Bures Sur Yvett, France, assignor to Commissariat a l'Energie Atomique, Paris, France

Filed Dec. 9, 1980, Ser. No. 214,680

Claims priority, application France, Dec. 26, 1979, 79 31680

Int. Cl.³ B65H ***81/04***

U.S. Cl. 242—7.02 **5 Claims**

1. An apparatus for coiling a filament on a sector shaped mandrel, said apparatus comprising:
a fixed frame;
a shaft having a first fixed longitudinal axis and rotatably held by said frame;
means for rotating said shaft about said first axis at a first rotational speed;
a chassis supported by said shaft for rotation about said first axis;

a circular arc-shaped supporting arm guided by said chassis for rotation about a second axis orthogonal to said first axis;
drive means for rotating said supporting arm about said second axis at a rotational speed less than said first rotational speed, said drive means including a driven worm screw meshing with a toothed sector of said supporting arm;

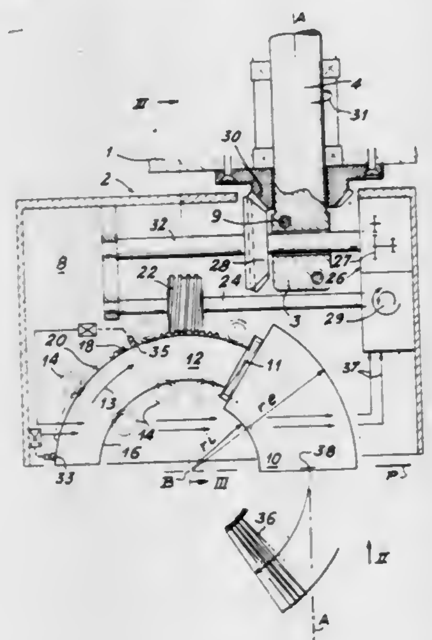

means for supporting said mandrel on one end of said supporting arm; and
means for supplying said filament to said mandrel in a coiling plane,
whereby said mandrel rotates about said first and second axes.

4,373,681
METHOD AND APPARATUS FOR CONTROLLING A STRAND TAKEUP REEL SHROUD
Edgar W. Crews, Mesa, and Charles E. Sprain, Phoenix, both of Ariz., assignors to Western Electric Company, Inc., New York, N.Y.
Filed Sep. 14, 1981, Ser. No. 301,809
Int. Cl.³ B65H *54/02, 67/04*
U.S. Cl. 242—25 A **3 Claims**

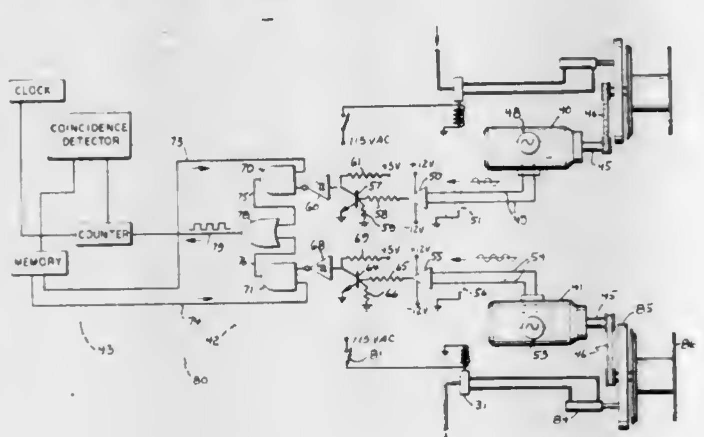

1. A method of controlling a shroud positionable by shroud drive means between a snagger covering position about a strand takeup reel being driven by a motor and a snagger uncovering position aside the strand takeup reel, and with the method comprising the steps of sensing the output speed of the strand takeup reel motor while the shroud is positioned in the covering position about the strand takeup reel and generating and inputting a shroud retraction signal to the shroud drive means upon sensing the speed of the motor to have been reduced to a preselected rate.

4,373,682
HOLDER FOR TOILET PAPER ROLL
Robert A. Dickson, 33A Knowles Ave., Daly City, Calif. 94014
Filed Sep. 18, 1980, Ser. No. 188,421
Int. Cl.³ B65H *19/00*
U.S. Cl. 242—55.2 **14 Claims**

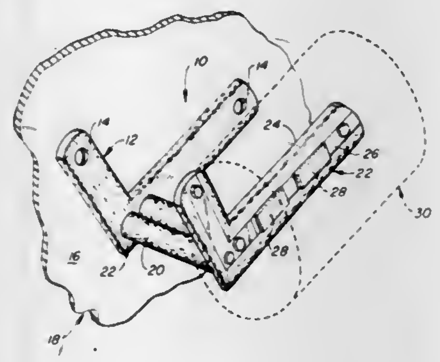

1. A holder for a toilet paper roll having a central cardboard tube comprising: a bracket adapted to be secured in a fixed position and having means thereon at one end thereof for hingedly mounting the bracket on an adjacent support for rotation about a generally horizontal axis; a spindle mounted on the bracket in a cantilever fashion and adapated to removably receive the cardboard tube of a toilet paper roll; and means including a piece of resilient sponge material mounted on the spindle for frictionally engaging the inner surface of the cardboard tube of the roll.

4,373,683
SNAP-IN SELF-CENTERING MECHANISM BUTTON
Robert A. Kyker, Collinsville, Okla., assignor to Brunswick Corporation, Skokie, Ill.
Filed Oct. 25, 1979, Ser. No. 88,032
Int. Cl.³ A01K *89/01*
U.S. Cl. 242—84.21 R **45 Claims**

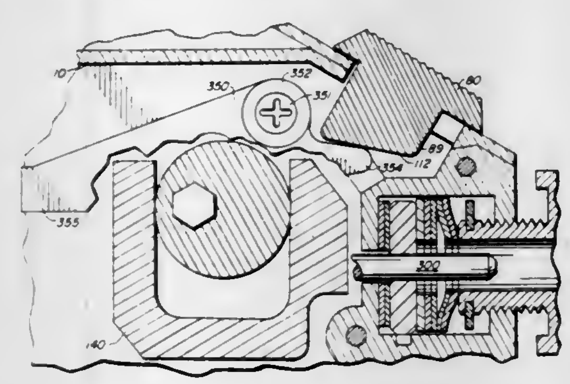

9. In a plate having spaced upper and lower surfaces and a rectangular passage between the two surfaces, first and second long sides of the rectangular passage, extending between the two surfaces, a button slidably mounted in the passageway comprising:
(a) a head mounted exterior of the upper surface;
(b) a lower portion having a top secured to the head and a base projecting through the passageway, the portion having first and second longitudinal spaced walls, wedge means mounted on the first wall, step means mounted between the head and the wedge means, cantilever arm means mounted on the second wall and plane means mounted on the arm means near the head and projecting outwardly from the arm;
(c) first means for maintaining the plane means in contact with the first side of the passageway;
(d) friction means for retaining the button in any preselected position by cooperative engagement of the plane means in contact with the first long side and step means in contact with the second long side;

(e) second means for retaining the button in the passageway.
43. An open face spinning reel having a housing, selectively operable means in said housing controlled by a movable button operable externally of the housing, and means for mounting said button on said housing for retention in one or more selected positions including a passageway formed in the wall of the housing, said button having a head mounted exteriorly of the housing and a lower portion with a base projecting through the passageway, the lower portion having first and second walls extending lengthwise thereof, wedge means on said first wall having a surface underlying and engageable with the interior of the housing wall along one side of the passageway, arm means connected to the second wall and yieldably extending outwardly away from said second wall toward a second side of the passageway opposite said one side with a part positioned in and urged toward said second side of the passageway and an angled surface adjacent and underlying the interior of the housing wall along said second side of the passageway, and coacting means on said part and the surface of said passageway for holding the button in a selected position and releasable by yielding of said arm means.

4,373,684
BELT RETRACTOR
Katsumi Naito, Fujisawa, Japan, assignor to Nissan Motor Co., Ltd. and NSK-Warnar K.K., both of, Japan
Filed Sep. 24, 1980, Ser. No. 190,281
Claims priority, application Japan, Sep. 27, 1979, 54-132526[U]
Int. Cl.³ A62B *35/00;* **B65H** *75/48*
U.S. Cl. 242—107.6 **7 Claims**

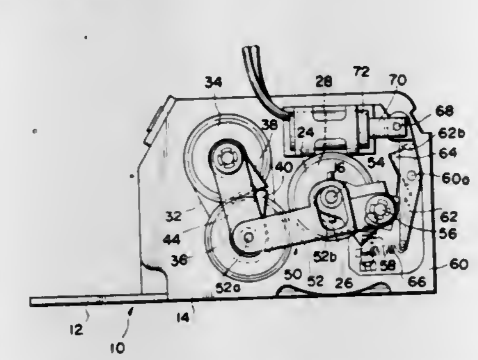

1. A belt retractor including a frame structure, a reel shaft having thereon a belt reel with a coil of seat belt wound therearound, said reel shaft secured to said frame structure for rotation in a first direction when said seat belt is pulled out of said belt reel and spring-biased for rotation in a second direction to retract said seat belt around said belt reel, said belt retractor comprising:
(a) lock means movable into driving connection with said reel shaft to prevent rotation of said reel shaft in the second direction while permitting said reel shaft to rotate through a predetermined angle in the first direction and to rotate back through said predetermined angle in the second direction; and
(b) drive means for bringing said lock means into driving connection with said reel shaft when said seat belt is worn, said drive means including link means spring-biased toward a first position where it removes said lock means from driving connection with said reel shaft, said link means being movable with rotation of said reel shaft in the second direction toward a second position where it brings said lock means into driving connection with said reel shaft, control means spring-biased toward a first position where it restricts the movement of said link means toward its second position, said control means being movable to a second position where it permits said link means to move to its second position and holds said link means in the second position, and actuator means for providing a force to bring said control means to its second position when said seat belt is worn.

4,373,685
STRAND CARRIER
George M. Hutchinson, Hartwell, Ga., and Robert L. Burchette, Jr., Spartanburg, S.C., assignors to LHP Corporation, Hartwell, Ga.
Filed Dec. 18, 1980, Ser. No. 218,005
Int. Cl.³ B65H *75/14*
U.S. Cl. 242—118.6 **9 Claims**

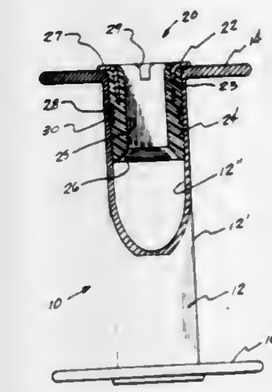

1. An improved strand carrier comprising:
(a) a barrel, said barrel having an outside wall defining a strand receiving surface and an inside wall defining an axial opening therethrough;
(b) an enlarged head secured to at least one end of said barrel defining an opening in communication with said barrel opening, said head further having carrier receiving means thereon; and
(c) a molded, mineral filled polymeric bushing received within said barrel and secured thereto, said polymeric bushing defining a spindle receiving opening therethrough and being high temperature and creep resistant whereby when said carrier is employed in an operation wherein a strand is wound around said carrier at speeds in excess of 18,000 revolutions per minute, without physical change to the bushing.

4,373,686
SYSTEM FOR THREAD GUIDING IN WINDING MACHINES
Ottavio Milli, 17 Piazza Dante, Grosseto 58100, Italy
Filed Nov. 28, 1979, Ser. No. 98,239
Int. Cl.³ B65H *54/28*
U.S. Cl. 242—158.2 **9 Claims**

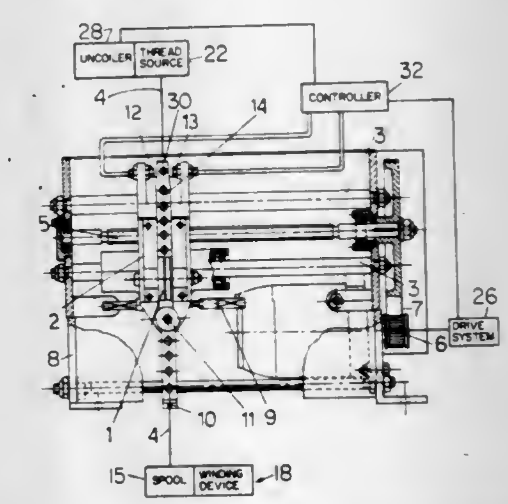

1. A system for guiding a thread in a winding machine, the thread being fed from a feed source and being wound upon a winding spool of a winding device, the spool having side walls, a center and a longitudinal axis and the thread being wound in the spool in layers of side by side turns laid one on top of another, the system comprising:
a carriage rolling upon fixed, linear guides and being dis-

placeable along the guides in two opposed directions, the guides being arranged parallel to the longitudinal axis of the spool;
drive means for displacing the carriage in the two opposed directions at a substantially continuous speed;
a guide roller carried on the carriage and rotatable in a direction substantially normal to the displacement directions of the carriage, the guide roller engaging with the thread and being rotated by the thread as the thread passes from the feed source to the spool;
an elongate lever pivotally mounted on the carriage, the lever including one end defining a fork through which the thread passes, the fork being arranged between the guide roller and the spool and the lever including another end extending opposite the one end a sufficient distance to amplify any motion of the one end, the lever being pivoted by lateral movements of the thread transmitted through the fork;
detector means located adjacent the other end of the lever for detecting any pivoting of the lever and providing control signals indicating the same;
control means for reversing the displacement of the carriage at the instant of the control signals; and
blocking means supported by the winding device of the winding spool, the blocking means including flanges extending inwardly of the spool side walls toward the center of the spool and defining contact planes precisely engageable against the thread as it is wound on the spool adjacent the side walls, the blocking means for imparting lateral movements to the thread when engaged therewith;
so that the lateral movements precisely imparted to the thread at the ends of the spool by the flanges cause a pivoting of the lever through the fork, the amplified movement of the other end of the lever being detected by the detector means and providing control signals indicating the same and the control means reversing the displacement of the carriage at a precise instant to commence the laying of a new layer of turns free of irregular superpositions of turns at the spool sidewalls.

4,373,687
DISPENSING CONTAINER
James A. Zicko, Natick, Mass., assignor to Container Corporation of America, Chicago, Ill.
Filed Apr. 1, 1981, Ser. No. 250,084
Int. Cl.³ B65H *55/00, 57/12*
U.S. Cl. 242—163 **4 Claims**

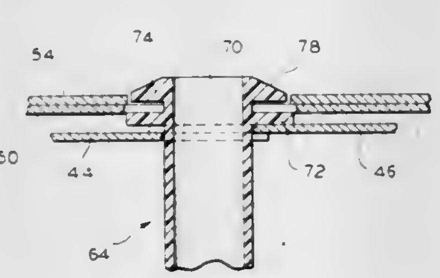

1. A dispensing container for coiled strand material comprising in combination:
a pair of opposed major side walls and a pair of opposed minor side walls;
end closure flaps connected to end edges at one end of each said major and minor side walls and foldable to form an end of the container;
a pair of underlying closure flaps connected to other end edges of said minor side flaps, each of said underlying closure flaps having an arcuate cut-out and adapted to be folded inwardly in overlapping relation with each other to provide an aperture;
a die-cut closure flap connected to the outer end edge of one of said major side walls;
a coil of strand material wound in a plurality of figure-8s for payout from the interior of the coil;
a hollow feed tube guide extending radially through the body of the coil and having a bore through which the free end of the strand material is passed as it is being unwound, said tube guide having an annular flange and a pair of projections spaced from said flange;
said underlying flaps frictionally engaging the outer surface of the tube guide, said die-cut flap being interlockingly engaged between the flange and projections of said tube guide; and
an outermost closure flap conneted to the other end edge of the other major side wall, said outermost flap having a circular perforated area for engaging the outer end of the tube guide for protecting it during shipment.

4,373,688
CANARD DRIVE MECHANISM LATCH FOR GUIDED PROJECTILE
Roger O. Topliffe, Amherst, N.H., assignor to The United States of America as represented by the Secretary of the Army, Washington, D.C.
Filed Jan. 19, 1981, Ser. No. 225,596
Int. Cl.³ F42B *15/16*
U.S. Cl. 244—3.24 **6 Claims**

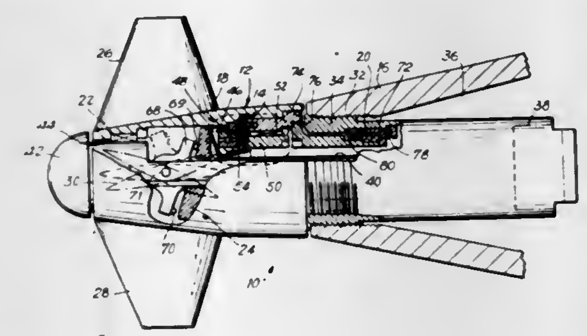

1. A guidance mechanism for a projectile of the type which imparts a spin to at least a portion of the guidance mechanism during launch which spin is reduced by despinning after launch, said guidance mechanism including at least one deflectable canard and a canard drive mechanism for deflecting said at least one deflectable canard with respect to said projectile, and a drive mechanism lock comprising:
means for immobilizing said canard drive mechanism prior to launch;
means for releasing said means for immobilizing under launch acceleration of said projectile; and
means for maintaining said means for immobilizing effective until said spin is reduced to a predetermined value.

4,373,689
TWO-AXIS RUDDER TRIM FOR AIRCRAFT
Robert A. Walker, 17130 Roscoe Blvd., Los Angeles, Calif. 91325
Filed Jul. 16, 1980, Ser. No. 169,405
Int. Cl.³ B64C *5/10*
U.S. Cl. 244—87 **1 Claim**

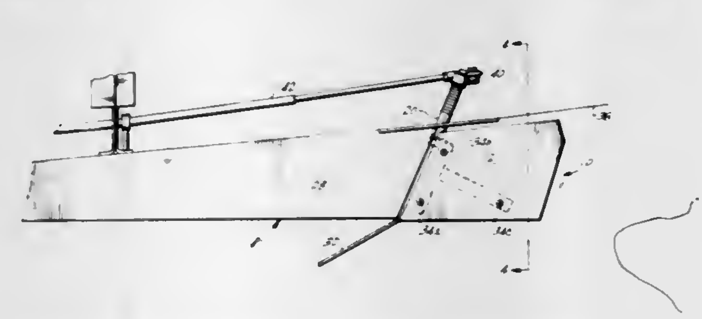

1. A two axis trim element for aircraft comprising:

a rotatable shaft extending from the rear portion of the underside of the aircraft;
an elongated, generally horizontal surface element having a downwardly-canted tab portion formed into the leading end thereof extending along the longitudinal axis of the aircraft;
an elongated vertical surface element attached at the port side of the horizontal surface element;
means for securing the vertical surface element to the shaft for swivelly mounting the trim element;
control means extending between the shaft and an operator's control position for enabling an operator to adjust the angle of attack of the trim element; and
an upwardly-canted portion formed into the horizontal surface toward the rear of the starboard side thereof opposite the vertical surface element, said canted portion being angled obliquely relative to the direction of elonation of the horizontal surface whereby the element functions to trim the aircraft about the pitch and yaw axes.

4,373,690
DEPLOYABLE SUPPORT STRUCTURE FOR SPACECRAFTS
Lee E. Stillman, Lancaster, Va., and Thomas G. Coughlin, Ellicott City, Md., assignors to The United States of America as represented by the Secretary of the Navy, Washington, D.C.
Filed Apr. 23, 1979, Ser. No. 32,580
Int. Cl.³ B64G *1/30, 1/10*
U.S. Cl. 244—173 **20 Claims**

1. A deployable support structure for use in conjunction with a spacecraft comprising:
an elongated arm providing a supporting surface;
first driven pivot means for pivotally connecting one end of said arm to said spacecraft, said first driven pivot means including a drive pulley, said arm being positionable adjacent to said spacecraft and extensible therefrom upon driving of said drive pulley of said first driven pivot means;
linear actuator means for mechanically storing and selectively releasing energy, said linear actuator means having a movable assembly defined by two spaced apart preselected points identifiable thereon, release of the energy stored by said linear actuator means causing said assembly to move, each of said two points shifting a preselected distance along a straight line in the same direction upon said movement; and
means for coupling said linear actuator means to said drive pulley of said first driven pivot means, said coupling means comprising a length of flexible cable forming a loop, said cable operably engaging said drive pulley and being affixed on the ends thereof to said first and second preselected points, releasing of energy from said linear actuator means thereby driving said first driven pivot means.

4,373,691
DECOUPLING ARRANGEMENT FOR NON-INSULATED AC TRACK CIRCUITS IN RAILWAY SYSTEMS
Hans Fricke, Wolfenbüttel; Jürgen Kiess, Gerlingen, and Lutz Schulmeyer, Stuttgart, all of Fed. Rep. of Germany, assignors to International Standard Electric Corporation, New York, N.Y.
Filed Dec. 8, 1980, Ser. No. 214,303
Claims priority, application Fed. Rep. of Germany, Dec. 19, 1979, 2951124
Int. Cl.³ B61L *12/06*
U.S. Cl. 246—34 CT **9 Claims**

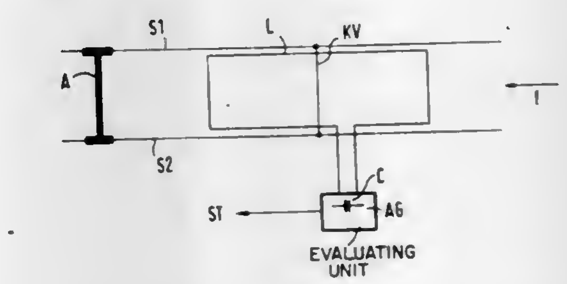

1. A decoupling arrangement for non-insulated AC track circuits in a railway system comprising:
a short circuiting cross bond connected between both rails of a track of said railway system;
at least one conductor loop disposed between said rails in the immediate vicinity of said cross bond and inductively coupled to said cross bond and to portions of said rails adjacent said cross bond to perform one of the following two operations (1) feed alternating current having a predetermined frequency into said rails or (2) couple said alternating current from said rails.

4,373,692
CHAIR CONTROL WITH HEIGHT ADJUSTMENT ACTUATOR
Jack R. Knoblauch, Byron Center; Duane M. Beukema, Grand Rapids, and Kenneth W. Hozeski, Grandville, all of Mich., assignors to Steelcase Inc., Grand Rapids, Mich.
Filed May 1, 1980, Ser. No. 145,623
Int. Cl.³ F16M *11/00*
U.S. Cl. 248—162.1 **26 Claims**

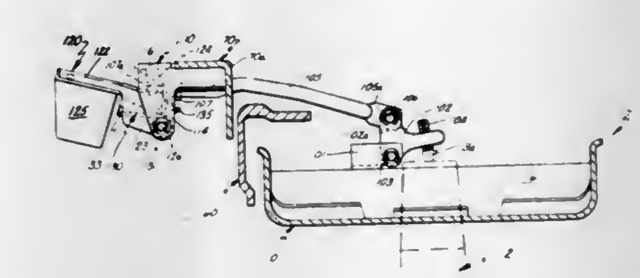

1. In a chair control having a stationary member for mounting on a height adjustable chair base, which base has a height adjustment actuator at the top thereof, said stationary member having mounting means for securing to the top of said chair base, and said chair control having a tiltable member pivotally mounted relative to said stationary member for securing to a chair seat, the improvement comprising: linkage means pivotally mounted at one end adjacent said mounting means whereby when said chair control is located in place atop a chair base, the height adjustment actuator of said chair base is engaged by said linkage means; said linkage means being pivotally connected at its other end to said tilting member of said chair control and extending to the exterior of said tilting member; handle means operably connected to said extending end of said linkage means whereby a user seated in a chair to which said chair control is secured can readily actuate the height adjustment actuator on a chair base mounted underneath said

chair control by reaching under said chair and activating said handle.

4,373,693
SHELF MOLDING CLIP ASSEMBLY
William Greenberger, White Plains, N.Y., assignor to The Hopp Press, Inc., New York, N.Y.
Filed Jul. 7, 1980, Ser. No. 166,537
Int. Cl.^{3} E04G *5/06*
U.S. Cl. 248—221.4 **9 Claims**

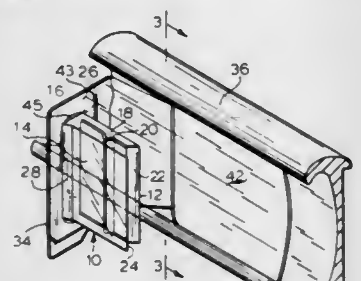

1. A clip adapted for use with a shelf molding comprising:
a substantially planar, resilient mounting member having an appropriate shape for engaging the parallel flanges of a shelf molding said mounting member having a pair of diametrically opposed rounded corners whereby the mounting member may be twisted into engagement with the parallel flanges of the shelf molding;
a pair of resilient, opposing gripping arms substantially perpendicularly affixed to said planar member, said arms having inner surfaces defining a channel therebetween; and,
said arms being integrally constructed as one piece and connected to each other near their point of affixation to said planar member, each of said arms having an outer surface including a ridge thereon, said ridges being positioned approximately the same distance from said planar member and running parallel thereto, each of said ridges terminating prior to the point of affixation of the arms to the planar member so as to define a pair of abutments running parallel to said planar member, said planar member and said abutments defining a pair of parallel recesses.

4,373,694
ADJUSTABLE SHELF SUPPORT
Francis C. Peterson, St. Charles, Ill., assignor to Illinois Tool Works Inc., Chicago, Ill.
Filed Mar. 20, 1981, Ser. No. 245,829
Int. Cl.^{3} A47G *29/02*
U.S. Cl. 248—246 **5 Claims**

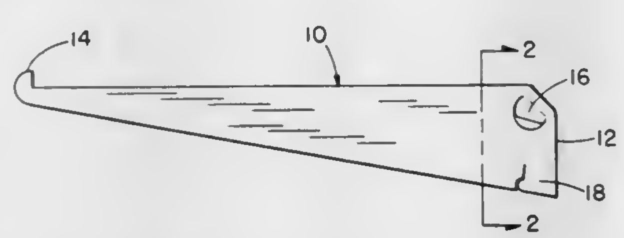

1. An adjustable shelf support comprising an elongated L-shaped standard for supporting a bracket, a first leg of said L-shaped standard having parallel protrusion means to prevent lateral movement of the bracket, said first leg adapted to be placed against and fastened to a vertical surface, a second leg of said L-shaped standard having a free end bent back toward said first leg to form parallel portions with a predetermined distance therebetween, a substantially planar bracket having a thickness substantially equal to said predetermined distance including a flat vertical edge for engaging said protrusion means, first and second finger means bent out of the plane of said bracket for engaging the secong leg of said standard, said first finger means to limit downward rotation of said bracket, said second finger means to limit upward rotation of said bracket, said second finger means being flexible so as to snap into a position adjacent to said free end of said second leg whereby upward rotation of said bracket causes said second finger means to move to a position between said parallel portions thereby positively preventing both continued upward rotation and lateral movement of said bracket.

4,373,695
APPARATUS FOR SUSPENDING A PLANTER
Bernard L. Faris, R.F.D. 1, Box 166, Glen Allen, Va. 23060
Filed Jun. 11, 1980, Ser. No. 158,421
The portion of the term of this patent subsequent to Feb. 19, 1997, has been disclaimed.
Int. Cl.^{3} F16M *13/00*
U.S. Cl. 248—318 **10 Claims**

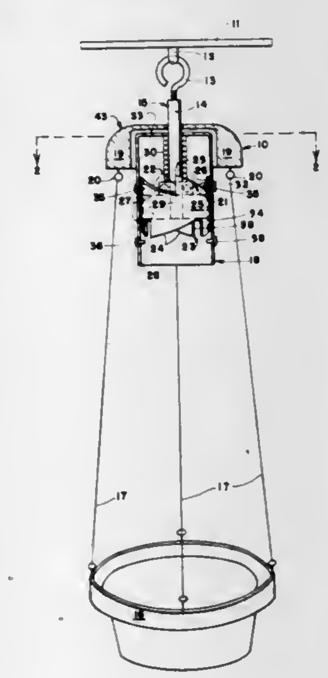

1. An apparatus to be pendantly supported from an overhead support for rotatively suspending an object therebelow comprising an outer member having a circular cylindrical configuration, an internal member slideably housed within said outer member and adapted for linear movement relative to said outer member along the vertical center axis thereof, and position restoring means interactively engaging said members in a manner such that one of said members is caused to rise when no significant downward force is applied thereto, each member being provided with attachment means for suspending an object from an overhead support, said internal member being comprised of a shaft coaxially disposed with said center axis and opposed spaced upper and lower circular arrays of teeth, said arrays being coaxially and immoveably secured to said shaft and possessing equal numbers of uniformly spaced vertically disposed teeth in a sawtooth configuration, each tooth having a vertical edge parallel to said center axis and a contiguous angled edge meeting with said vertical edge as an apex at the outermost reach of said tooth and meeting with the next adjacent vertical edge to form a substantially V-shaped bight at the base of said teeth, the direction of the angled edges of the teeth of one array being opposite to the direction of the angled edges of the teeth of the opposed array, said arrays being aligned such that the vertical edges of the teeth of one array are opposite the angled edges of the teeth of the opposed array and the apexes of the teeth of one array are upwardly directed while the apexes of the teeth of the other array are downwardly directed, said outer member possessing at least one inwardly directed bearing means adapted to interact with said teeth and capable of supporting said internal member, whereby one member rises when downward force is removed therefrom, causing said bearing means to engage the angled edges of the teeth of one array and traverse said edges while rotating said shaft until stopping at bights in said array, and said risen member descends when downward force is restored thereto, causing said bearing means to engage the angled edges of the teeth of the opposed array and traverse said edges while rotating said shaft until stopping at bights in said opposed array.

4,373,696
MOTOR MOUNTING ARRANGEMENT, DEVICE FOR MOUNTING A MOTOR, AND METHODS
Richard W. Dochterman, Fort Wayne, Ind., assignor to General Electric Company, Fort Wayne, Ind.
Filed Jun. 4, 1980, Ser. No. 156,275
Int. Cl.^{3} F16M *13/00*
U.S. Cl. 248—604 **27 Claims**

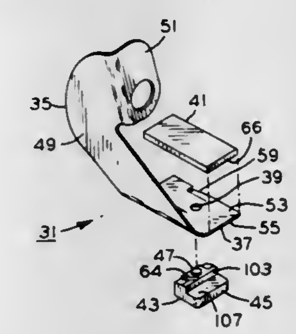

1. A method of manufacturing a torsionally flexible vibration isolating device adapted for mounting an electric motor, the device having a pair of weldable members adapted to cooperate as heat sink means, and a flexible mounting arm including a motor end flange having a pair of opposite surfaces with an opening extending therebetween through the motor end flange, the method comprising the steps of:
lancing at least one tab from the motor end flange of the mounting arm generally adjacent the opening therein and in a direction away from one of the opposite surfaces of the motor end flange;
providing one of the weldable members with a pair of projections arranged generally in an L-shaped configuration with respect to each other;
inserting one of the projections into the opening in the motor end flange and locating the other of the projections adjacent the other of the opposite surfaces of the motor end flange in predetermined spaced relation therewith and so as to extend generally in a direction away from both the at least one tab and the opening;
disposing the other of the weldable members in overlaying relation at least adjacent the one opposite surface of the motor end flange and interfacing the other weldable member with the one projection on the one weldable member inserted into the opening in the motor end flange;
associating a pair of electrodes with the weldable members and urging the weldable members toward each other with the motor end flange interposed therebetween;
passing a welding current through the weldable members so as to weld the one projection on the one weldable member to the other weldable member at the interface therebetween; and
dissipating welding heat caused by the welding current along the heat sink means so as to prevent excessive heat transmission to the mounting arm.

4,373,697
PULSE WIDTH MODULATED CONSTANT CURRENT SERVO DRIVER
Weldon L. Phelps, Dunlap, Ill., assignor to Caterpillar Tractor Co., Peoria, Ill.
PCT No. PCT/US80/01751, § 371 Date Dec. 29, 1980, § 102(e) Date Dec. 29, 1980, PCT Pub. No. WO82/02236, PCT Pub. Date Jul. 8, 1982
PCT Filed Dec. 29, 1980, Ser. No. 275,074
Int. Cl.^{3} F16K *31/02*
U.S. Cl. 251—129 **3 Claims**

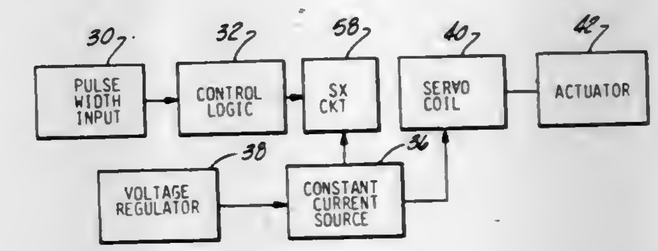

1. In an apparatus for controlling an hydraulic servo valve (48) having a coil (40) operated output (42) responsive to control signals for producing hydraulic output pressures (P_o) respectively proportionate to the duty factors (t_1/t_2) of said control signals, and means (30, 32) for producing said control signals, the improvement comprising:
a DC voltage supply (50) such as a battery which is subject to variations in output voltage level;
regulator means (38) connected to the supply (50) to provide a regulated voltage;
a constant current generator circuit (36) connected to receive the regulated voltage for producing a current output constant magnitude which is substantially independent of variations in the voltage from said supply (50);
and variable duty cycle switch means (58) interconnecting the constant current generator circuit (36) with the coil (40) to apply current pulses of constant magnitude but variable duration to the coil (40).

4,373,698
SHUTOFF VALVE ACTUATOR REMOTE CONTROL SYSTEM
Veniamin M. Anisimov, ulitsa Dekabristov, 15, kv. 6, Biisk Altaiskogo kraya; Valentin V. Belov, Klenovy bulvar, 8, kv. 47; Vsevolod I. Verkevich, ulitsa Moldagulovoi, 18, korpus 2, kv. 254, both of Moscow, and Jury E. Orionov, ulitsa Dekabristov, 12, kv. 13, Biisk Altaiskogo kraya, all of U.S.S.R.
Filed Aug. 20, 1980, Ser. No. 179,690
Int. Cl.^{3} F16K *31/12*
U.S. Cl. 251—26 **1 Claim**

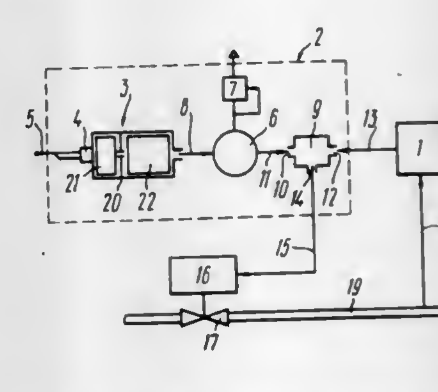

1. A shutoff valve actuator remote control system with an emergency control line and comprising:
a main control apparatus having an outlet; and
a transportable duplicating control apparatus connected with said main control apparatus;
wherein said duplicating control apparatus comprises:

a self-contained power source in the form of a gas generator with an igniter connected to said emergency control line, said gas generator having an outlet;
a safety valve;
a receiver connected with said safety valve and having an outlet and an inlet connected with said outlet from the gas generator; and
a commutator having a first inlet connected with said outlet from the main control apparatus, a second inlet connected with said outlet from the receiver, and an outlet connected with said shutoff valve actuator.

4,373,699
FLUID FLOW CONTROL VALVE FOR DENTAL INSTRUMENTS
Hermann Leiberich, Karlsruhe, Fed. Rep. of Germany, assignor to Sybron Corporation, Rochester, N.Y.
Filed May 15, 1980, Ser. No. 149,909
Int. Cl.^{3} F16K *31/06*
U.S. Cl. 251—139 4 Claims

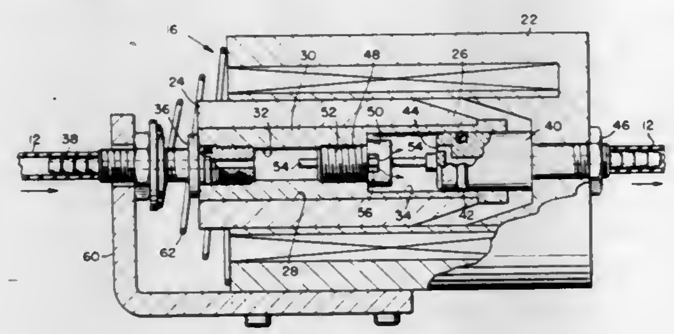

1. A fluid flow control valve for varying the flow of fluid in a range from zero to maximum flow directly responsive to an applied voltage said valve comprising:
(a) a solenoid including a coil and a core;
(b) said core having a fluid passage extending axially therethrough, the inlet of said passage being adapted for connection to a source of fluid under pressure and the outlet of said passage being an exit for fluid flowing through said core;
(c) valve means fixed to said core within said axial passage for movement with said core, said valve means being located between said inlet and outlet wherein the movement of said core responsive to a voltage applied to said coil opens said valve means and permits fluid flow through said axial passage; and
(d) means in said axial passage down stream from said valve mans for creating fluid pressure in said axial passage responsive to the flow of fluid therethrough, said fluid pressure acting on said core in a direction for offsetting the magnetic force induced in said core by the voltage applied to said coil.

4,373,700
METAL SEAL FOR A GATE VALVE STEM
Ervin A. Buchta, Houston, Tex., assignor to FMC Corporation, Chicago, Ill.
Filed Feb. 25, 1981, Ser. No. 238,250
Int. Cl.^{3} F16K *41/14, 41/16*
U.S. Cl. 251—214 12 Claims

1. A valve comprising:
a body having a fluid flow passage extending transversely therethrough between an inlet and an outlet of said passage, and a gate chamber extending through a portion of said body at right angles to and intersecting said fluid flow passage;
a valve gate having a port therethrough;
means for slidably mounting said valve gate in said valve body to connect said passage outlet to said passage inlet through said valve gate port when said valve gate is in a first position, said valve gate blocking the flow of fluid between said passage inlet and said passage outlet when said valve gate is in a second position;
a bonnet mounted on said valve body to enclose said gate chamber, said bonnet having a bore therethrough;
a metallic sealing member mounted between said body and said bonnet, said sealing member having a bore therethrough;
a gate stem mounted through said bore in said bonnet and through said bore in said sealing member, said gate stem having first and second enlarged portions, said first enlarged portion forming a fluid-tight seal with said sealing

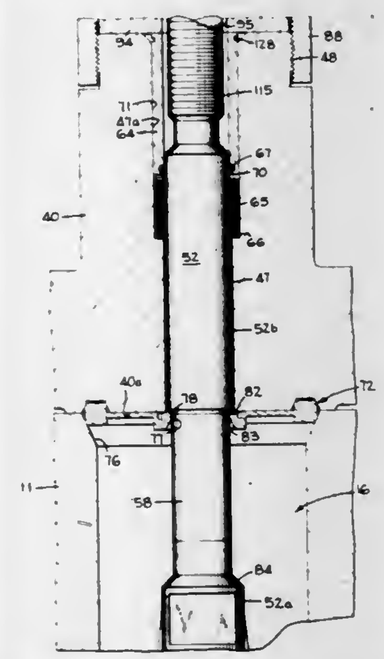

member when said stem is in a fully extended position and said second enlarged portion forming a fluid-tight seal with said sealing member when said stem is in a fully retracted position, said first and said second enlarged portions of said gate stem each including a wedge-shaped cam surface which mates with a wedge-shaped cam surface on said metallic sealing member to form said fluid-tight seal between said gate stem and said metallic sealing member when said gate stem is either fully retracted or fully extended; and
means for connecting said stem to said valve gate.

4,373,701
LIFTING APPARATUS
Mitsuhiro Kishi, 1320 Mizuhonocho, Ashikaga-shi, Tochigi-Pref., 326-03, Japan
Filed Nov. 28, 1980, Ser. No. 210,872
Int. Cl.^{3} B60P *1/02*
U.S. Cl. 254—122 6 Claims

1. A lifting apparatus comprising:
a foundation,
a work platform, and
a pantographic lifting mechanism operatively coupled between foundation and said work platform for elevating said work platform away from said foundation, said pantographic lifting mechanism including a plurality of pivotally coupled X-link units, each X-link unit having a pair of transversely spaced scissor linkages pivotally connected as at a midportion thereof, a first pair of lever arms having one pair of corresponding portions pivotally connected respectively to a first pair of transversely spaced scissor linkages of one of said X-link units and another pair of corresponding end portions of said first pair of lever arms being connected in rolling engagement at all times with a second pair of transversely spaced scissor linkages of a second of said X-link units, a second pair of lever arms having a first pair of corresponding end portions pivotally connected respectively to a first pair of transversely spaced scissor linkages of one of said X-link units and another pair of corresponding end portions in rolling

engagement at all times with a third pair of transversely spaced scissor linkages of a third of said X-link units, said first and second pairs of said lever arms being disposed one on each side of the midportion of said one of said X-link units, and actuator means mounted on said first pair of transversely spaced scissor linkages and actuatable to

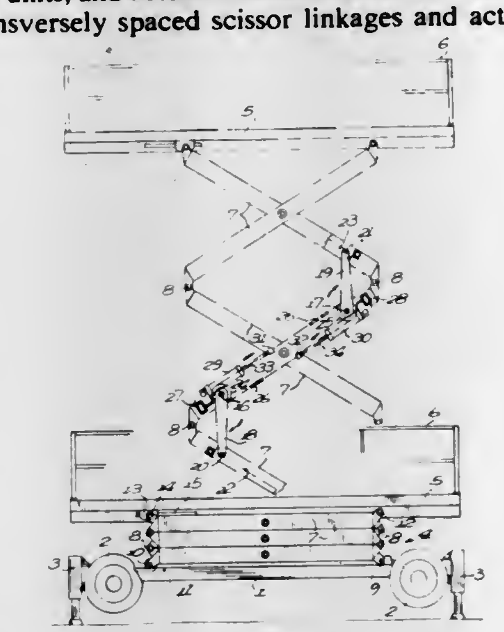

move said first and second pairs of said lever arms in unison about said one ends thereof, whereby when said actuator means is actuated, said other ends will roll along said second and third transversely spaced scissor linkages to forcibly extend said X-link units with respect to each other.

4,373,702
JET IMPINGEMENT/RADIANT HEATING APPARATUS
Viswanath Jayaraman, Livonia, Mich., and Carroll Cone, Toledo, Ohio, assignors to Holcroft & Company, Livonia, Mich.
Filed May 14, 1981, Ser. No. 263,630
Int. Cl.^{3} C21D *9/56*
U.S. Cl. 266—111 9 Claims

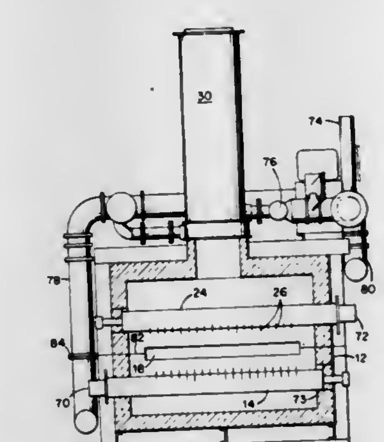

1. Apparatus for heat-treating flat metal stock comprising an insulated compartment having an entry slot and an exit slot formed in opposite endwalls of said compartment; means for introducing said flat stock into said compartment through said entry slot and for removing said stock through said exit slot such that said stock traverses said compartment along a plane; a first array of tubes of heat-resistant material disposed in spaced relationship to each other equidistant from and beneath said plane, said tubes each extending across at least a portion of the width of said compartment and having a row of perforations formed along the upper surface thereof confronting said plane; a second array of tubes of heat-resistant material disposed in spaced relationship to each other equidistant from, and above said plane, said second array of tubes each extending across at least a portion of the width of said compartment and having a row of perforations formed along the lower surface thereof confronting said plane; each of said tubes of said arrays having a closed end; and a burner positioned adjacent the end of each of said tubes opposite said closed end for generating heated products of combustion within said tubes to heat said tubes to radiance and to eject said heated products of combustion as jets emanating from said perforations, whereby said metal stock is heated by radiation from said tubes and by convection heat transfer by the impingement of said jets upon said stock.

4,373,703
DEVICE FOR RAPIDLY COOLING METAL TUBES
Philippe Perineau, Aubervilliers, and Yves Lebreton, Aulnoye, both of France, assignors to Vallourec, Paris, France
Filed Feb. 16, 1982, Ser. No. 349,050
Claims priority, application France, Feb. 27, 1981, 81 04380
Int. Cl.^{3} C21D *1/62*
U.S. Cl. 266—131 16 Claims

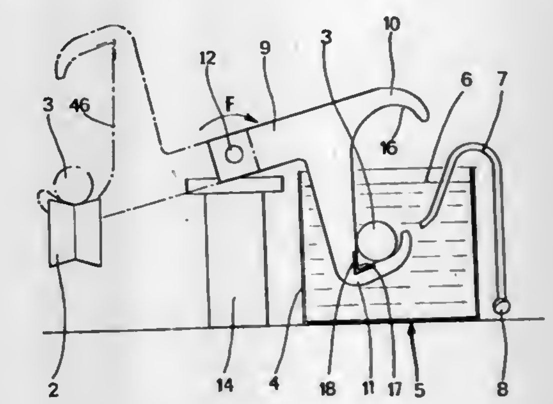

1. In a device for rapidly cooling hot metal tubes comprising means for transferring hot tubes upstream, a quenching tank, an immersion device means for transferring the hot tubes to the immersion device, means for clamping the tubes, and means for recovering, removing and transferring the cold tubes downstream, the improvement wherein said immersion device comprises a longitudinal deflector positioned straight below the tube to be treated in order to cause a symmetrical circulation of the cooling liquid around the tube during the descent phase into the tank, and an air injection system fastened to one end of the tube to be treated, said injection system being adapted to blow air at a fast flow rate into the tube during the phase that the tube is descending into the tank and is maintained immersed.

4,373,704
APPARATUS FOR REFINING MOLTEN METAL
John F. Pelton, Yorktown Heights, N.Y., assignor to Union Carbide Corporation, Danbury, Conn.
Filed Jun. 12, 1980, Ser. No. 158,771
Int. Cl.^{3} C22B *21/06*
U.S. Cl. 266—225 6 Claims

1. In an apparatus for refining molten metal comprising, in combination:
(a) a vessel having an inlet zone and an outlet zone; at least two refining compartments in between, connected in series, separated by baffles, and positioned in such a manner that the first refining compartment in the series is adjacent and connected to the inlet zone and the last refining compartment in the series is adjacent and connected to the outlet zone; and dross removal means; and
(b) one rotating gas distributing device disposed at about the center of each refining compartment, said device comprising a shaft having drive means at its upper end and a rotor fixedly attached to its lower end, the upper end being positioned in the top section of the compartment and the lower end being positioned in the bottom section of the compartment,

the improvement comprising:

(1) positioning the inlet zone and the outlet zone in such a manner that the molten metal is permitted to flow from the bottom of the inlet zone to the bottom section of the first refining compartment in the series and from the top section of the last refining compartment in the series to the top of the outlet zone; and

(2) utilizing for each separating baffle, a baffle consisting of first and second baffles bearing a spaced relationship to one another and positioned in such a manner that (i) the first baffle is on the inlet side of the vessel and the second baffle is on the outlet side of the vessel and (ii) molten metal is permitted to flow from the top section of one refining compartment over the top of the first baffle into the space between the first and second baffles and under the second baffle into the bottom section of the next refining compartment in the series.

4,373,705

METHOD AND APPARATUS FOR SEPARATING SLAG AND POURING MOLTEN STEEL OUT OF A CONTAINER SUCH AS A CONVERTER OR THE LIKE

Hirosuke Yamada, Kurashiki, Japan, assignor to Kawasaki Steel Corporation, Kobe, Japan

Filed Dec. 29, 1980, Ser. No. 221,351

Claims priority, application Japan, Dec. 27, 1979, 54-169130

Int. Cl.[3] F27D *3/14*

U.S. Cl. 266—227 7 Claims

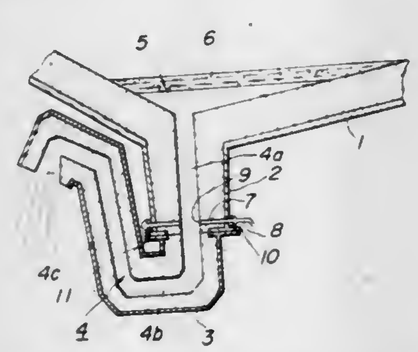

1. In a method of separating slag and pouring molten steel out of a container such as a converter or the like, comprising guiding the molten steel into a U-shaped passage composed of a descending portion communicated with a molten steel outlet opening of the container, an intermediate portion and an ascending portion communicated with an outlet opening of the U-shaped passage and secured to and located at the lower side position of the container when it is tilted into its tapping position after the refining has been completed, the U-shaped passage being operative to keep the static pressure of the residual molten steel in balance with the static pressure of the residual slag, the improvement which comprises jetting an inert gas which does not positively react with the molten steel directly into the flow of the molten steel in said descending portion of the U-shaped passage, the amount of flow of the jet gas being at most 5 Nm^3/min, whereby the jet gas causes the flow speed of the molten steel to retard so as to eliminate the influence of the inertia force of the flow of the molten steel exerted to said balance between the static pressure of the residual molten steel and the static pressure of the residual slag in said U-shaped passage and effect a complete separation of the slag and molten steel.

4,373,706

APPARATUS FOR HEAT TREATMENT OF MATERIAL TO BE WORKED ON, ESPECIALLY OF ALUMINUM OR MAGNESIUM ALLOYS

Friedrich W. Elhaus, Jägerstrasse 117a, D-56 Wuppertal 1, Fed. Rep. of Germany, and Bernhard Hilge, Adliswil, Switzerland, assignors to Friedrich Wilhelm Elhaus, Wuppertal, Fed. Rep. of Germany and Prolizenz A.G., Chur, Switzerland

Division of Ser. No. 887,316, Mar. 16, 1978, Pat. No. 4,245,818, which is a continuation-in-part of Ser. No. 669,347, Mar. 22, 1976, Pat. No. 4,135,704, which is a continuation-in-part of Ser. No. 417,509, Nov. 20, 1973, Pat. No. 3,953,247. This application Sep. 16, 1980, Ser. No. 187,805

Claims priority, application Fed. Rep. of Germany, Nov. 21, 1972, 2256978; Oct. 3, 1973, 2349765

The portion of the term of this patent subsequent to Jan. 20, 1998, has been disclaimed.

Int. Cl.[3] C21D *9/08, 1/08, 1/767*

U.S. Cl. 266—252 9 Claims

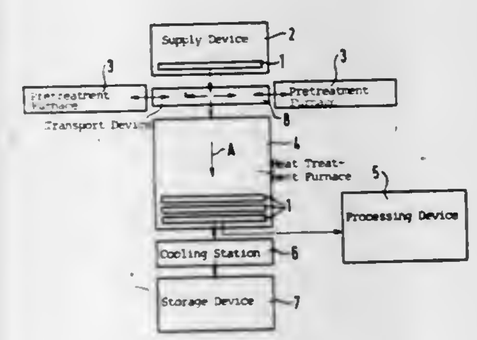

1. In an apparatus for heat treatment of a metal piece or metal pieces to be subsequently worked on, such as ingots, billets, rods, tubes, cast strips and cast billets, especially of aluminum or magnesium alloys, wherein the pieces are preheated, each piece having a predetermined diameter, and thereafter the pieces are held at a predetermined heat treatment temperature for a predetermined time, comprising, in combination:

heating means operable for heating and preheating, respectively, said pieces,

a transport device movable in a transport direction, with relation to said heating means, including

a plurality of stationary beams, each of the beams being formed with a plurality of sawtooth-shaped depressions, each of the depressions having a bottom for receiving the pieces, and being at least partly defined by an oblique surface relatively slightly inclined with respect to the transport direction; and

a plurality of lifting beams disposed between the stationary beams, respectively, movable from a rest position below said lifting beams in a lifting direction, and independently thereof also in the transport direction, each of the lifting beams having a flat surface and a plurality of prismatic guards disposed on said surface at respective distances, each of said distances exceeding the diameter of each of the pieces, said pieces being liftable from said depressions by said lifting beams and lowerable in a controlled manner on the oblique surfaces of the succeeding depressions, respectively, as viewed in the transport direction, said pieces being thereupon freely rollable into the bottom of said depressions, said lifting beams being contactable by said pieces upon the pieces being disposed in said depressions, and subsequently movable in a controlled manner in a direction opposite to the lifting direction.

4,373,707

CONSTRUCTION INCLUDING A GAS SPRING

Werner Mölders, Plaidt, Fed. Rep. of Germany, assignor to Stabilus GmbH, Koblenz-Neuendorf, Fed. Rep. of Germany

Filed Nov. 19, 1980, Ser. No. 208,296

Claims priority, application Fed. Rep. of Germany, Nov. 29, 1979, 2948081

Int. Cl.[3] A47C *20/04;* F16F *9/00, 9/54*

U.S. Cl. 267—64.12 10 Claims

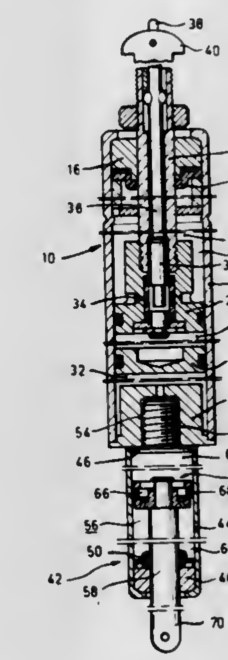

1. In a construction, including:

a stationary construction unit;

a movable construction unit movably mounted on said stationary construction unit;

a gas spring unit operatively connected to both said stationary construction unit and said movable construction unit, said gas spring unit including a cylinder member having two ends and a cavity defined therein, a piston rod member sealingly guided through an aperture in one of said ends, a piston connected to said piston rod member and defining two working chambers within said cavity, a pressurized fluid in said two working chambers, fluid passage means between said two working chambers, and valve means for opening and closing said fluid passage means;

first connecting means for connecting one of said members to one of said construction units;

second connecting means for connecting the other of said members to the other of said construction units;

the improvement comprising:

a gas spring device connected to the other of said members and to said second connecting means, said gas spring device including a cylinder element having two ends and a cavity defined therein, a piston rod element sealingly guided through an aperture in one end of said cylinder element, and a pressurized fluid in said cavity;

one of said cylinder and piston rod elements being connected to said other member of said gas spring unit, the other of said cylinder and piston rod elements being connected to the said second connecting means;

said piston rod member being movable along a path of movement with respect to said cylinder member between an innermost position and an outermost position, said pressurized fluid within said cylinder member exerting an expelling force onto said piston rod member towards said outermost position when said valve means are open, said piston rod member being lockable in a plurality of positions along said path of movement by closing said valve means;

said piston rod element being movable along a range of movement with respect to said cylinder element between an innermost position and an outermost position, said pressurized fluid within said cylinder element exerting an expelling force onto said piston rod element towards said outermost position;

said movable construction unit being lockable in a plurality of positions corresponding to said plurality of positions of said piston rod member with said piston rod element being in its innermost position;

said movable construction unit being further movable along an additional way of movement adjacent its respective locked position, said additional way of movement corresponding to said range of movement of said piston rod element;

said movable construction unit exerting a movement-resisting force on both said piston rod member and said piston rod element counteracting to said expelling forces exerted on said piston rod member and said piston rod element by pressurized fluid;

said expelling force exerted on said piston rod member exceeding said movement-resisting force along the path of movement of said piston rod member; and

said expelling force exerted on said piston rod element by pressurized fluid being smaller than said movement-resisting force at least when said piston rod element is in its innermost position.

4,373,708

THRUST ABSORPTION MECHANISM

Jorge Costa, Yverdon, Switzerland, assignor to Hermes Precisa International S.A., Yverdon, Switzerland

PCT No. PCT/CH79/00019, § 371 Date Oct. 7, 1979, § 102(e) Date Aug. 28, 1979, PCT Pub. No. WO79/00601, PCT Pub. Date Aug. 23, 1979

PCT Filed Feb. 6, 1979, Ser. No. 165,485

Claims priority, application Switzerland, Feb. 7, 1978, 1327/78

Int. Cl.[3] B41J *19/08, 21/06*

U.S. Cl. 267—136 3 Claims

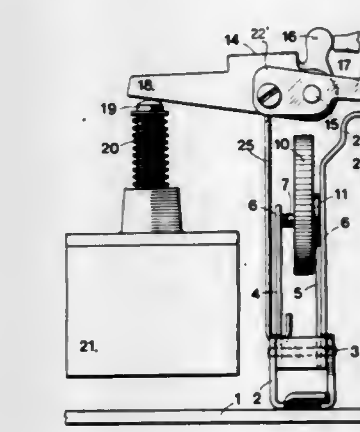

1. In a thrust absorption mechanism comprising a thrust piece **(19)** providing a stop for a moving body, said thrust piece **(19)** being displaced under the effect of the kinetic energy of said moving body against the action of a compression spring **(20)** and a shock absorber **(21)**, a driving device **(10,24)** and retaining means **(22,23)** preventing the driving device from being engaged, the improvement wherein said retaining means **(22,23)** is released upon movement of said thrust piece **(19)**, said mechanism comprises apparatus **(5,12)** for causing said device **(10,24)** to be engaged upon release of said retaining means **(22,23)**, said driving device acting jointly with said moving body on said thrust piece **(19)** and driving said thrust piece in a controlled and predetermined movement, a bracket **(2)**, a pin **(3)** fixedly mounted on said bracket, a first lever **(4)** rotatably mounted on said pin, said lever including a first arm **(6)** and a second arm **(8)**, means connecting said second arm **(8)** to said thrust piece **(19)**, said driving device comprising a cam **(10)** and a driving shaft **(24)**, means for driving said shaft in continuous rotation, said cam **(10)** engaging said driving shaft **(24)** upon actuation of said apparatus **(5,12)**, said cam comprising an eccentric roller **(10)** including a circular shoulder **(11)**,

said apparatus comprising a second lever (**5**) and a draw spring (**12**), said second lever rotatably mounted at one of its ends on said fixed pin (**3**), the other end of said second lever (**5**) engaging said circular shoulder (**11**) of said eccentric roller (**10**), said draw spring (**12**) acting on said eccentric roller through said second lever (**5**) and biasing said eccentric roller (**10**) toward said driving shaft (**24**).

4,373,709
SURGICAL LIMB HOLDER
Everett D. Whitt, 3504 Rivercrest Dr., Columbus, Ohio 43223
Filed Sep. 24, 1980, Ser. No. 190,193
Int. Cl.³ A61G *13/00*
U.S. Cl. 269—328 **5 Claims**

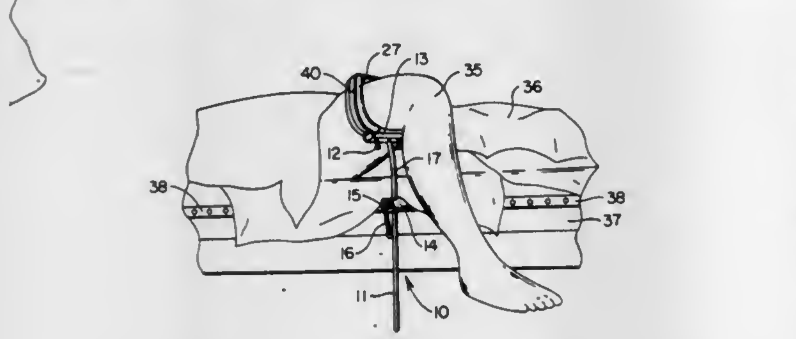

1. A limb holder for surgical procedures comprising:
(a) a vise constructed for attachment on a table means for the surgical procedures,
(b) a stanchion member comprising a generally vertically oriented rod-like leg constructed to adjustably slide and rotate in the vise and having a lateral support member fastened at the upper end, the leg having a deflection in form of less than 90° intermediate the vise and the lateral support member, to change the angle, attitude, and height of the limb holder upon adjustment in the vise, the vise having means for tightening the holding pressure on the stanchion and fixedly maintaining the angle, attitude and height of the limb holder,
(c) oppositely placed generally symmetrical restrainer members adjustably engaged on the stanchion member, the restrainer members having upstanding generally arcuate and limb conforming stays positioned to cooperatively support and restrain a limb; and
(d) clamping means on the limb holder, constructed to hold the restraining members at fixed positions on the lateral support member, the restrainer members being slidingly engaged on the lateral supports, and the clamping means being on the lateral supports.

4,373,710
APPARATUS FOR INSERTING SUPPLEMENTARY MATERIAL INTO NEWSPAPER JACKETS
Kenneth H. Hansen, Littleton, and Louis S. Conover, Jr., Aurora, both of Colo., assignors to Nolan Systems, Inc., Denver, Colo.
Filed Aug. 22, 1980, Ser. No. 180,368
Int. Cl.³ B65H *5/30*
U.S. Cl. 270—55 **9 Claims**

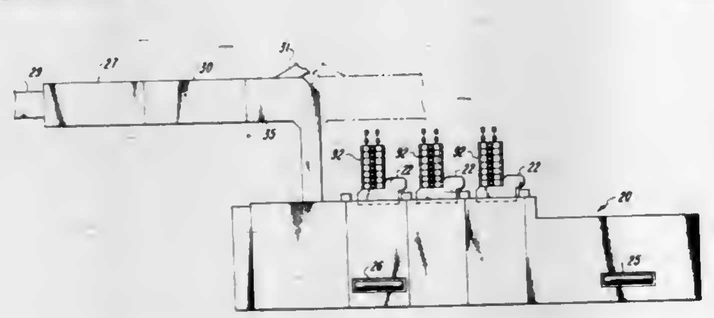

1. An apparatus for conveying newspaper jackets in lapped orientation from a newspaper press to an assembly conveyor for later insertion of inserts into the newspaper jackets comprising in combination:
newspaper conveyor means for moving said newspaper jackets from the press in a lapped orientation;
means for speeding up said newspaper jackets relative to the speed of said newspaper conveyor means, said means for speeding up said newspaper jackets having an upstream end and a downstream end, said upstream end of said means for speeding up said newspaper jackets being adjacent to said newspaper conveyor means to thereby receive said newspaper jackets from said newspaper conveyor means so as to separate the lapped jackets;
an indexing conveyor having a plurality of pins mounted thereon, said indexing conveyor being adjacent to the downstream end of said means for speeding up said newspaper jackets, said pins adapted to abut a leading edge of said separated newspaper jackets upon receipt from said speed-up means;
sensing means for sensing the position of said newspaper jackets relative to said pins; and
means responsive to said sensing means for diverting selected ones of said newspaper jackets away from the indexing conveyor depending upon the position of the newspaper jacket relative to said pins.

7. A conveyor system comprising in combination:
a plurality of receptacle means for receiving and conveying vertically oriented newspaper jackets, each receptacle means having an uppermost opening for receiving said jackets and a lowermost opening for discharging said jackets together defining a vertically oriented opening through said receptacle means;
means operatively connected to each of said receptacle means for moving said receptacle means along a predetermined path;
support means positioned a spaced distance below the uppermost opening in each of said receptacle means along said predetermined path, said support means for supporting said newspaper jackets at said spaced distance below said uppermost opening in each of said receptacle means; and
means for adjusting the spaced distance of said support means relative to the uppermost opening in each of said receptacle means to accommodate various sized newspaper jackets.

9. In a conveyor system having a plurality of moving receptacle means for retaining a newspaper jacket into which an insert is to be fed by an insert feeder, wherein the improvement comprises:
means for sensing the failure to feed insert material into the receptacle means;
a photoelectric beam mounted at a fixed position at a starting position of the conveyor system, a reflector mounted at a fixed position on said receptacle means, said reflector adapted to be sensed by said photoelectric beam, and a shift register adapted to monitor the position of said receptacle based on input signals from said photoelectric beam striking said reflector, whereby said photoelectric beam, said reflector and said shift register define means for tracking the receptacle means from said starting position to a preselected location;
control means responsive to said means for sensing the failure of said insert feeder to feed an insert, said control means further adapted to respond to said means for tracking the position of said receptacle;
means operated by said control means for securing a newspaper jacket in a receptacle if an insert is not fed into the jacket; and
means operated by said control means for releasing said newspaper jacket at said preselected location.

4,373,711
INSERTER FEEDER ASSEMBLIES
Dean H. Foster, Stratford, and Harold Silverman, Norwalk, both of Conn., assignors to Pitney Bowes Inc., Stamford, Conn.
Filed Sep. 11, 1980, Ser. No. 185,857
Int. Cl.³ B65H *1/00*
U.S. Cl. 271—171 **6 Claims**

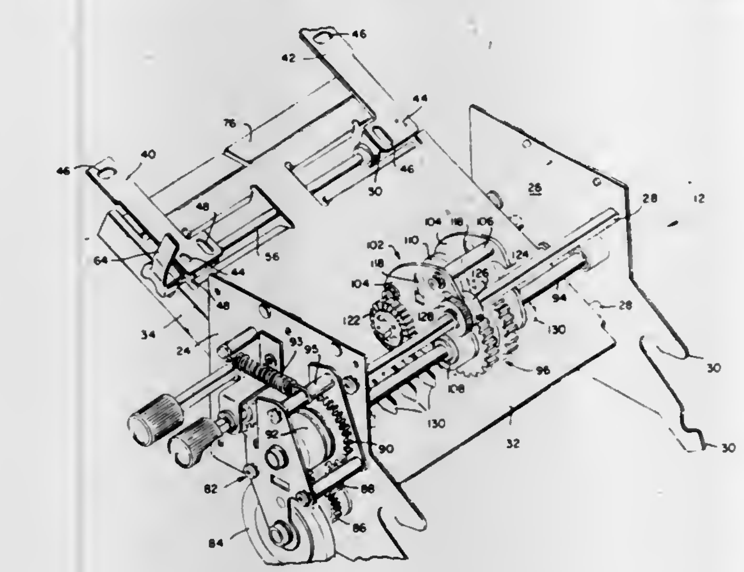

1. A feeder assembly for selectively feeding successive sheet material from a stack, the feeder assembly comprising a tray for carrying the stack of sheet materials, means forming a pair of guides for engaging the stack, means adjustably securing each guide relative to the tray, said securing means including means for adjusting the guides relative to one another for parallelism, the securing means including a pair of carrier means, each guide being secured to a respective carrier means, and means for simultaneously moving both carrier means for symmetrical placement of the guides relative to the tray, means for retaining the guides in an adjusted position, the retaining means including friction means extending from one carrier means and means biasing the friction means toward the underside of the tray, means mounting the tray in a sloped plane and guide biasing means for urging one end of each guide in a direction perpendicular from the plane of the tray, the guide biasing means comprising shoe means engaging the underside of each guide adjacent the upper end of the tray, whereby feeder assembly set-up is simplified.

4,373,712
APPARATUS FOR TRANSPORTING SHEET MATERIAL
Wilhelm Mitzel, Neukeferloh, Fed. Rep. of Germany, assignor to GAO Gesellschaft für Automation und Organisation mbH, Munich, Fed. Rep. of Germany
Filed Oct. 5, 1979, Ser. No. 82,314
Claims priority, application Fed. Rep. of Germany, Jun. 7, 1979, 2923148
Int. Cl.³ B65H *5/02*
U.S. Cl. 271—272 **9 Claims**

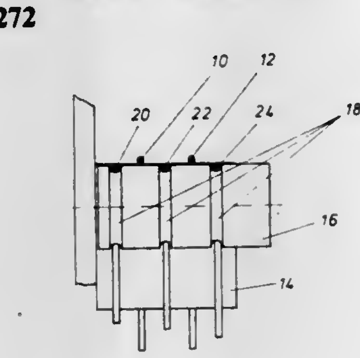

1. Apparatus for transporting sheets of material in a path from an input to a discharge, the path being bent resulting in a set back of the sheets as they traverse bends in the path, said apparatus comprising:
a plurality of direction changing rollers lying along the path and defining bends therein said rollers being of differing diameters; and
a sheet transporting belt means extending across said rollers for transporting the sheets along the path, the arcuate contact angle (α) between said belt means and roller at each of said rollers being selected in accordance with the diameter (d) of the roller such that the sheets at each of said rollers are subjected to the same amount of set back,
said rollers being so positioned along said path that the sheets are continuously contacted by at least one roller.

4,373,713
DIVERTER MECHANISM
Michael H. Loebach, Red Lion, Pa., assignor to Motter Printing Press Co., York, Pa.
Filed Dec. 24, 1980, Ser. No. 219,829
Int. Cl.³ B65H *29/60, 29/68*
U.S. Cl. 271—303 **5 Claims**

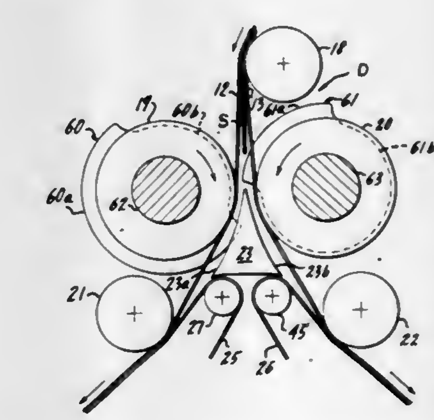

1. A cut sheet handling system comprising a pair of sheet feeding tapes guided for movement in a closed path, means for guiding the tapes in converging paths to receive the cut sheets seriatim and then guiding the tapes in side-by-side relation along a sheet feeding span and then guiding the tapes in diverging paths to release the sheets, a guide having a tapered upstream end interposed between the diverging paths of the sheet feeding tapes, a pair of concave diverging sheet guiding surfaces on the guide extending in diverging paths from the tapered upstream end thereof, rotary guide rolls having their outer convex surfaces adjacent and spaced apart from each of the guiding surfaces to guide each of the tapes in closely spaced apart relation to the guiding surfaces to define a sheet feeding channel therebetween, rotary diverters mounted coaxially with the tape guiding rollers and having raised cam surfaces which cooperate with the more remote tapes to define converging surfaces to guide the leading ends of the sheets past the upstream tapered end of the guide and into the channel defined by the more remote tape and the adjacent guiding surface, the upstream end of the guide and the raised cam surfaces intermeshing to permit the cam surfaces to recess beneath the guiding surfaces after guiding the leading ends of the sheets thereto, thereby releasing the leading end of the sheet within the appropriate channel, the circumferential length of each raised cam surface permitting it and the cooperating more remote tape to guide and support each sheet upstream of the tapered end of the guide through a substantial length of the sheet so that the portion of the sheet upstream of the leading end will not whip or be damaged or be permitted to enter the wrong path.

4,373,714
TRANSFER DEVICE

Shinichi Hashimoto, Fujisawa, Japan, assignor to Tokyo Shibaura Denki Kabushiki Kaisha, Kawasaki, Japan
Filed Mar. 4, 1981, Ser. No. 240,284
Claims priority, application Japan, Mar. 5, 1980, 55-27645; Mar. 5, 1980, 55-27646
Int. Cl.³ B65H *29/56*
U.S. Cl. 271—310 **14 Claims**

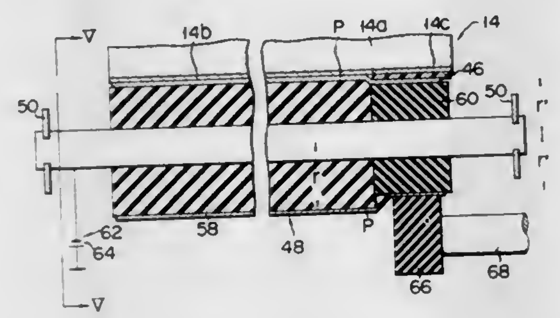

1. A transfer device for an electrostatic copying apparatus including a rotatable photosensitive drum having a first peripheral layer on which a toner image is formed and a second peripheral layer which is coaxially adjacent to said first peripheral layer along a rotating axis of said drum and on which a toner image is not formed, and a peeling mechanism for peeling a copying paper from said photosensitive drum, said transfer device comprising:

a transfer roller which is rotatably disposed in opposition to said photosensitive drum and cooperates with said photosensitive drum to nip the copying paper therebetween, said transfer roller including a first roller portion in opposition to said first peripheral layer of said photosensitive drum and a second roller portion coaxial with said first roller portion, and

means for applying a surface electrical potential to said transfer roller to electrically attract the visible image from said photosensitive drum to the copying paper,

said peeling mechanism is being disposed in opposition to said second roller portion of said transfer roller which cooperates with said second roller portion to nip one end of the copying paper to peel the copying paper from said photosensitive drum, and including a peeling member which is disposed between said second peripheral layer of said photosensitive drum and said second roller portion of said transfer roller and nips one side of the copying paper with the assistance of said second roller portion of said transfer roller, while the one side of the copying paper is not in contact with said second peripheral layer, and a peeling roller rotatably contacting on the second roller portion of the transfer roller, said peeling roller being disposed downstream from said peeling member in a direction of the rotation of said transfer roller and nips with the assistance of said second portion of said transfer roller the one side of the copying paper transferred.

4,373,715
RIDING ANIMAL DEVICE FOR CHILDREN

Billie R. Henn, Box 546, Havre, Mont. 59501
Filed Apr. 1, 1981, Ser. No. 249,817
Int. Cl.³ A63G *19/00*
U.S. Cl. 272—1 R **4 Claims**

1. A riding animal device for children, comprising a body part adapted to be firmly supported on a receiving surface and having an outward configuration simulating the body portion of an animal, said body part being provided with a recessed surface defining a narrow, forwardly and upwardly open slot in the forward end thereof for removably receiving a head part, said slot being closed at its lower end; a plurality of independent head parts formed, respectively, to simulate the heads of different animals; correspondingly narrow, substantially flat tongues extending backwardly from the respective head parts for fitting snugly but freely into the said forwardly and upwardly open slot of the body part, the surface of said slot providing the sole support means for each of the tongues when inserted into said slot, each of said tongues when inserted into said slot forming the sole attachment means of the head part associated therewith to the body part to provide for quick and easy changing of the head parts; the opening of said forwardly and upwardly open slot in the body part extending

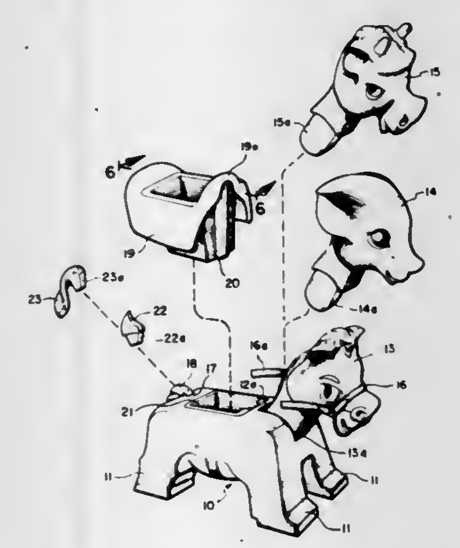

rearwardly a distance such as to provide oscillating leeway for the received tongue of one of said head parts upwardly and rearwardly from the closed lower end thereof which serves as a limit stop for gravity descent of the head part; and bridle and reins associated with each of the head parts for enabling the head part associated with the tongue received in the slot as defined above to be pulled upwardly and rearwardly by a child seated on the animal.

4,373,716
EXERCISING DEVICE

Franco Pagani, 1100 Newportville Rd., Apt. 908, Croydon, Pa. 19020
Filed Dec. 17, 1979, Ser. No. 104,248
Int. Cl.³ A63B *21/04*
U.S. Cl. 272—137 **18 Claims**

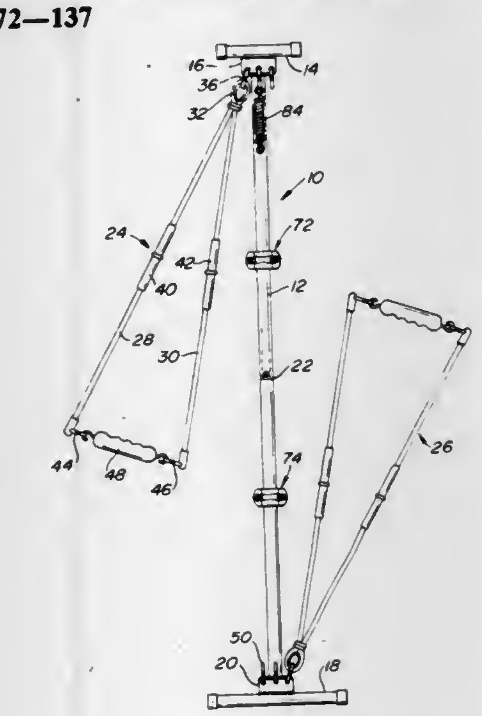

1. An exerciser comprising a rigid central rod, a rigid transverse header fixedly secured to at least one of the end portions of said rod, said header being generally perpendicular to said rod and being substantially shorter than said rod, at least two strands of extensible cord each releasably attached at their end portions to opposite end portions of said rod to thereby define one disposition wherein said strands are generally parallel to said rod, means at a first end portion of said rod for releasably securing both end portions of one strand thereto, and means at the opposite end portion of the rod for releasably securing both ends of the other strand thereto to thereby define a second disposition of said strands relative to said rod.

4,373,717
WRIST CURL MACHINE

Lloyd J. Lambert, Jr., 1538 College Ave., South Houston, Tex. 77587
Filed Nov. 1, 1978, Ser. No. 956,675
Int. Cl.³ A63B *23/00*
U.S. Cl. 272—67 **8 Claims**

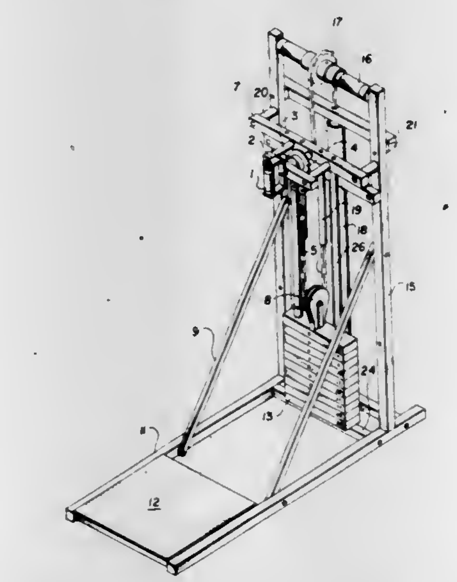

1. A wrist curl machine comprising a shaft, a plurality of adjustable weights, a first hand grip means for being grasped by a user and for raising and lowering said plurality of adjustable weights, said first hand grip means being supported on said shaft, an upper first sprocket supported on said shaft so that rotation of said first hand grip means causes rotation of said upper first sprocket, a lower second sprocket, a chain connected to said upper first sprocket and which extends downwardly and around said lower second sprocket, said weights connected to said lower second sprocket, whereby when said hand grip means is rotated to wind the chain on said upper first sprocket, said weights will be displaced upwardly, said weights are constrained by vertical rods so that they are capable of only vertical displacement, said chain extends beyond said lower second sprocket upwardly to a third sprocket, an axle supporting said third sprocket, second hand grip means disposed on said axle on opposed sides of said third sprocket, whereby rotation of said second hand grips means on opposed sides of said third sprocket causes vertical displacement of said weights as well.

4,373,718
FLEXIBLE CORK HANDLE-WRAPPING STRIP

Donald H. Schmidt, 14745 Major Ave., Oak Forest, Ill. 60452
Continuation-in-part of Ser. No. 167,697, Jul. 11, 1980, abandoned. This application May 26, 1981, Ser. No. 266,748
Int. Cl.³ G05G *1/04;* **C08G** *51/20;* **A63B** *49/08, 53/14*
U.S. Cl. 273—75 **21 Claims**

1. An elongated, flexible handle-wrapping strip which comprises a first layer of a composite of cork granules, each 40 parts by weight of said cork granules being plasticized with 3 to 20 parts by weight of a liquid organic polyol and bonded together in a flexible plastic binder material; a second layer of adhesive on one side of the first layer, said adhesive layer comprising a flexible plastic sheet coated on both sides with said adhesive and bonded on one side to said first layer; and a

third, peel-sheet layer overlying the adhesive layer for peeling away to expose the adhesive layer for use.

4,373,719
ELECTRONIC BRIDGE GAME SYSTEM

Ronald C. Nelson, and Richard L. Merrick, Jr., both of Miami, Fla., assignors to Fidelity Electronics, Ltd., Miami, Fla.
Filed Jan. 4, 1980, Ser. No. 109,495
Int. Cl.³ A63F *1/00*
U.S. Cl. 273—1 E **13 Claims**

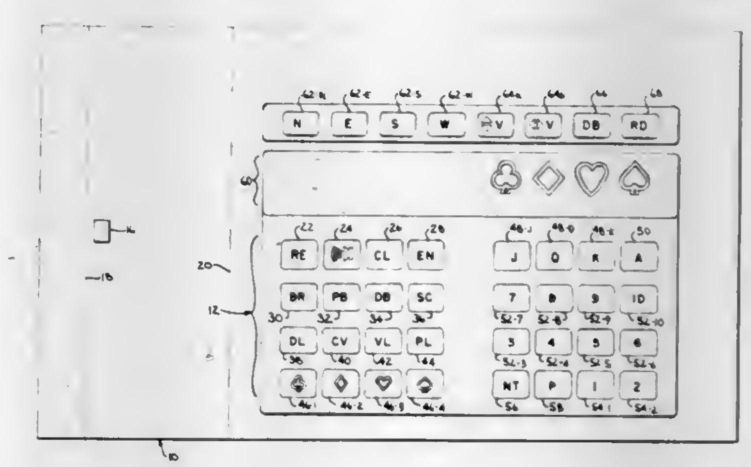

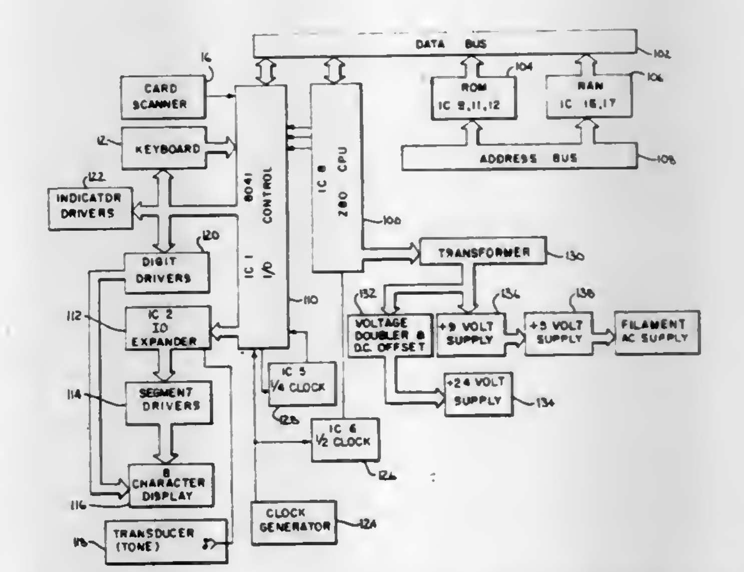

1. An electronic game playing system for performing in the place of at least one of the plurality of human players which

normally play bridge card games selected functions normally performed by one or more of the players comprising:

memory means for storing data required for the play of the game including data representative of the identity of cards to be played by the system, data representative of cards played by the players and the system, data representative of each bid in a sequence of a plurality of bids made by the player and the system, and including data received by system data input means;

system data input means including card input means for receiving selected card identity data and bid input means for receiving bid data representative of each of a sequence of bids by the players;

means for producing positional identity data representative of the relative position of each of the card hands;

bid response means for selecting a sequence of one or more bid values for each of the card hands being played by the system in response to the card identity data for each such hand and in response to each prior bid in the sequence of said bid data stored in said memory means in accordance with preselected criteria stored in memory;

contract value memory means responsive to a selected sequence of bids for storing data representative of the last bid prior to said selected sequence and for storing the positional identity data representative of the card hand making said last bid;

card playing means for selecting data representative of a card from the cards in each of the card hand being played by the system in response to the identity of cards played by the human players, the identity of cards in the hand being played by the system and the value stored in said contract value memory means in accordance with preselected playing criteria; and

display means for displaying the bid values selected by the system and the identity of the each card selected by the system.

4,373,720

TENNIS PRACTICE BACKBOARD

John P. Lombardi, Sterling, Va.; Tore M. Hult, Bethesda, Md., and Robert H. Trowbridge, Jr., Leesburg, Va., assignors to Jimmy Connors Rally Champion Enterprise, Sterling, Va.

Filed Aug. 6, 1980, Ser. No. 175,743

Int. Cl.³ A63B *61/00, 69/38*

U.S. Cl. 273—29 A **9 Claims**

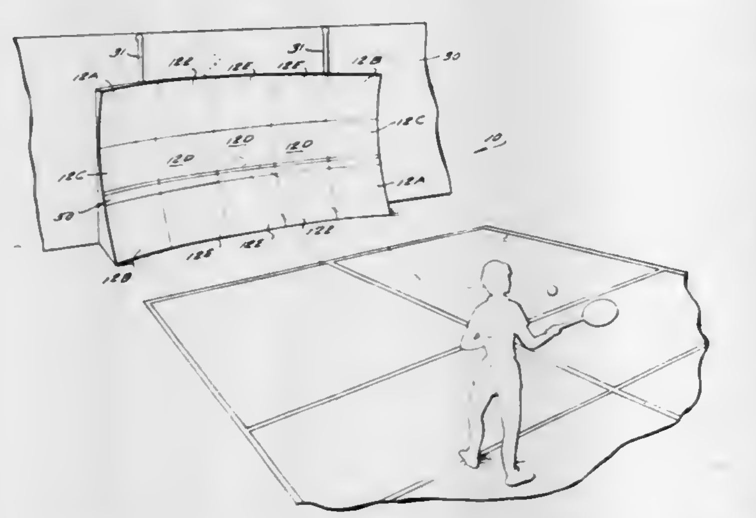

1. A tennis practice backboard comprising

a plurality of rebound panels, each having a rebound surface curved about a first axis, wherein each of said panels consists essentially of an integral structure of self-skinning structural polyurethane foam having a density of about 4–80 lbs./ft.^{3}, a skin density of about 20–80 lbs./ft.^{3}, and a skin hardness of about 30–90 on the Shore D scale and 50 to 95 on the Shore A scale, and wherein each of said panels has an integral circumferential lip extending away from said concave surface thereof;

means for attaching said panels together in abutting relationship to provide a tennis rebound backboard curved about a common said first axis;

means for attaching each of a plurality of brackets to a said panel;

wherein said means for attaching said panels together comprise a plurality of fasteners passing through adjacent lips of adjacent panels, and passing through adjacent lips and brackets; and

means for mounting said tennis rebound backboard so that said first axis is horizontal and so that the top of said backboard is tilted backwardly with respect to the bottom thereof a small positive angle α.

4,373,721

RACKET STRINGER TENSIONER

Lynn L. Ray, P.O. Box 3464, San Diego, Calif. 92103

Filed Feb. 27, 1981, Ser. No. 238,890

Int. Cl.³ A63B *51/00*

U.S. Cl. 273—73 A **3 Claims**

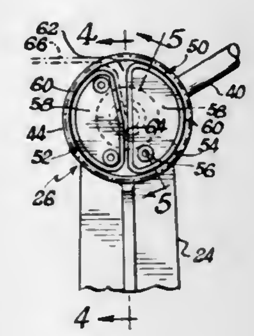

1. In a racket stringer having a frame for holding a racket and a string tensioner support mounted to said frame, a string tensioner comprising:

(a) a split drum and means mounting same to said support rotationally to define a rotational axis generally perpendicular to the direction of a string extended from said racket;

(b) said split drum defining two drum portions having a corridor therebetween and being mutually compressible under the action of a string wrapped therearound to pinch a string extended through said corridor;

(c) said drum being substantially circular in cross-section and said corridor generally following a chord across a cross-section of said drum;

(d) a member mounted to said support for releasably applying a rotational force to said drum mounting means about its axis such that a string drawn from a racket around said drum and through said corridor is gripped by said drum portions and tensioned by the force exerted by said member; and

(e) said means mounting said drum portions comprising a carrier rotationally mounted to said support, and one of said drum portions being fixed on said carrier and the other being moveably mounted thereto to be compressible against the drum portion fixed on said carrier to pinch a string extended through said corridor.

4,373,722

ELECTRONIC VEHICLE RACE SIMULATOR

Kenneth M. Kite; Allen F. Eberts, both of Cincinnati, and Joseph A. Cocovich, Loveland, all of Ohio, assignors to CPG Products Corp., Minneapolis, Minn.

Filed Jun. 12, 1980, Ser. No. 158,835

Int. Cl.³ A63F *9/14*

U.S. Cl. 273—85 G **35 Claims**

1. An electronic vehicle race simulator comprising sound producing means, means providing a relatively low frequency signal, means responsive to said signal for causing said sound producing means to provide a sound resembling the sound of a vehicle engine at a given speed, display means responsive to said signal for providing a numerical reading representative of engine speed at any given moment, manually-actuatable means, means controlled by said manually-actuatable means for increasing the frequency of said signal in accordance with the length of time said manually-actuatable means is actuated to cause said sound producing means to provide a higher pitch sound resembling a higher engine speed and to cause said

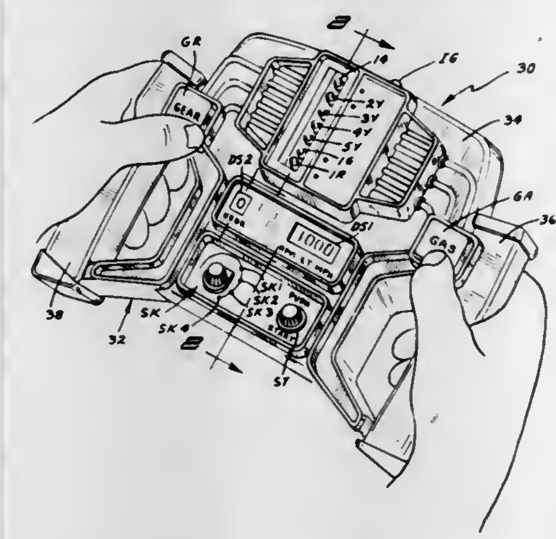

display means to simultaneously provide a higher numerical reading representative of the higher engine speed, means for selecting a predetermined value of said frequency, means for detecting when said predetermined frequency value has been exceeded, and means responsive to said detecting means for interrupting the production of sound from said sound producing means after said frequency has increased to said predetermined value.

4,373,723

AMUSEMENT APPARATUS

George E. R. Brown, 42 Rimington Way, Osgodby, Scarborough, North Yorkshire, England (YO11 3QN); Arthur E. Helm, 32 Beresford Dr., Churchtown, Southport, Merseyside, and Stuart Keane, Dove Cottage, 15, Garden La., Sherburn in Elmet, Yorks, both of England

Filed Sep. 19, 1980, Ser. No. 189,968

Claims priority, application United Kingdom, Sep. 22, 1979, 7932929

Int. Cl.³ A63F *9/14*

U.S. Cl. 273—86 B **23 Claims**

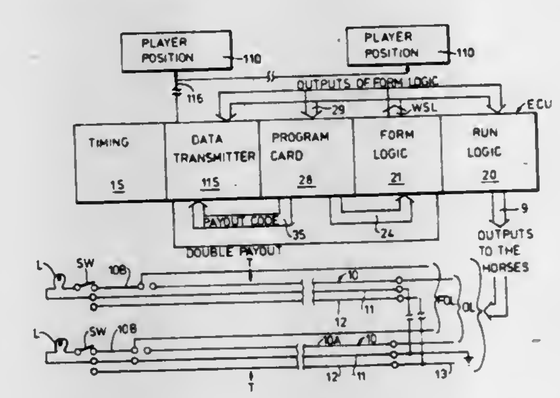

23. Amusement apparatus including means for controlling the movement of a plurality of objects simultaneously over a course having a first part and a last part in each of successive games, means for establishing probabilities for each object to complete the course first in any game, the means for controlling being responsive to the means for establishing and to means for ensuring that the first object to complete the course and thus win is not predictable, and means for generating data representative of the winning object, and payout in accordance with its odds; a plurality of player stations each including means for displaying said odds for the objects and for the first object to complete the course in any game, means for entering a choice by a player of which of the objects he thinks may win, means for accepting choice tokens representing a bet stake on that choice, and means for paying out tokens in accordance with said odds in the event of the chosen object winning, and data transmission means for sending data from the means for generating to means at each player station for receiving said data and controlling operation of the means for paying out.

4,373,724

FAMILY BASEBALL GAME

Harry Shoglow, 4200 Lee Hwy., Arlington, Va. 22207

Filed Aug. 4, 1980, Ser. No. 174,934

Int. Cl.³ A63F *7/06, 7/24, 7/30;* **A63B** *63/04*

U.S. Cl. 273—89 **1 Claim**

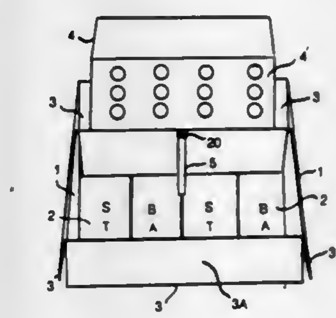

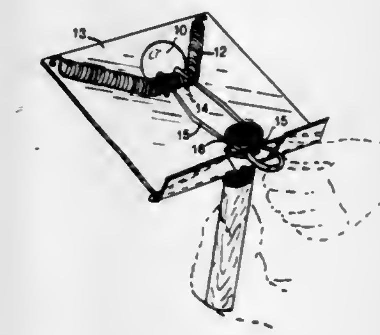

1. A packaged baseball game comprising a container having sides and a bottom

a flap secured to each side movable between a container closing position and a container opening position,

a target secured to one of said flaps on the side thereof facing said bottom when said flap is in its container closing position,

said target comprising a plurality of scoring apertures therein, and baseball scoring indicia adjacent said apertures,

a prop means engagable with said target for holding said target in an upright position with said apertures facing outwardly overlooking said bottom,

said bottom comprising a plurality of troughs and further baseball scoring indicia in said troughs, and

an ejector for propelling balls toward said target comprising, a flat disc, a spring secured at opposite ends to spaced points on said disc, a handle secured to said disc for manipulating and aiming said ejector and a wire secured to said spring intermediate said ends for retracting said spring.

4,373,725

PINBALL MACHINE HAVING MAGNETIC BALL CONTROL

Steven S. Ritchie, Carpentersville, Ill., assignor to Williams Electronics, Inc., Chicago, Ill.

Filed Oct. 24, 1980, Ser. No. 200,559

Int. Cl.³ A63D *3/00*

U.S. Cl. 273—121 A **11 Claims**

1. An improved pinball machine including an inclined play-

field having targets, balls susceptible to magnetic attraction, and a means for propelling said balls into play upon said playfield, the improvement comprising:

(a) an electromagnet operatively associated with said playfield;

(b) a first switch external of said playfield which can be activated by a player;

(c) a second switch which is actuated by a ball operating one or more targets on said playfield; and

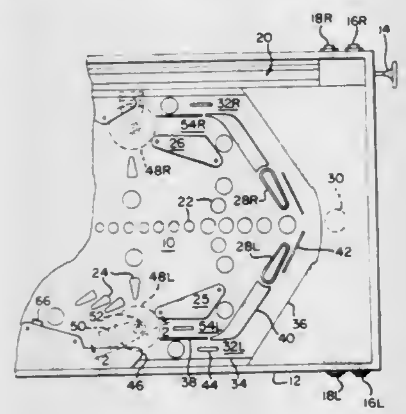

(d) said electromagnet, said first switch, and said second switch connected in circuit so that a ball which hits said target thereby activating said second switch may thereafter be selectively attracted by said electromagnet upon activation of said first switch by the player thereby to alter or stop the motion of such ball.

4,373,726

AUTOMATIC GAMING SYSTEM

Richard W. Churchill, Hopkinton; Don W. Hartman, Harvard; Richard A. Howard, Stow, all of Mass., and Victor Markowicz, North Bergen, N.J., assignors to Datatrol Inc., Hudson, Mass.

Filed Aug. 25, 1980, Ser. No. 180,603
Int. Cl.³ A63F *7/00*
U.S. Cl. 273—138 A 10 Claims

1. An automatic gaming system employing a plurality of gaming cards used by the players comprising:

a card dispensing unit including means for reading from a gaming card a coded representation of the gaming indicia format on the card;

storage means;

means for verifying the coded representation;

means responsive to a verified coded representation for assigning a control identification to that card and storing said coded representation and control identification in said storage means;

means for printing said assigned control identification on said card; and

a gaming unit including means for entering selected gaming indicia in said storage means;

means for entering the control identification of an alleged winning card;

means for validating said control identification of the alleged winning card;

means for comparing the entered selected gaming indicia with the gaming indicia format of the alleged winning card to determine if a predetermined pattern of the selected indicia is present on the card format indicating a winning card;

means for setting the value of the cards and means for selecting the number of cards to be printed and storing that information in said storge means; and

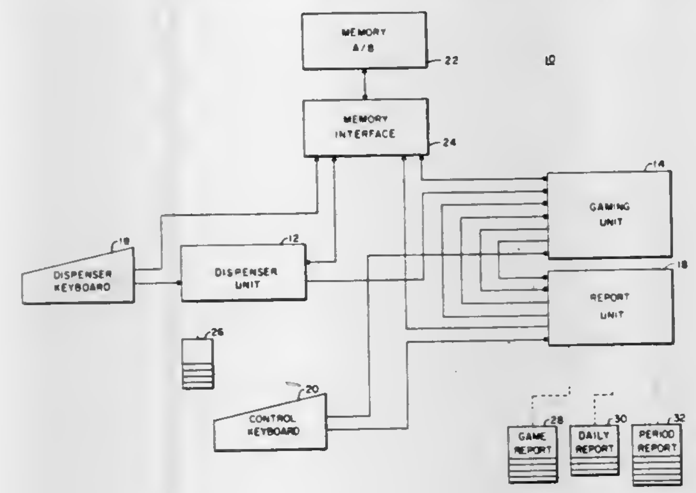

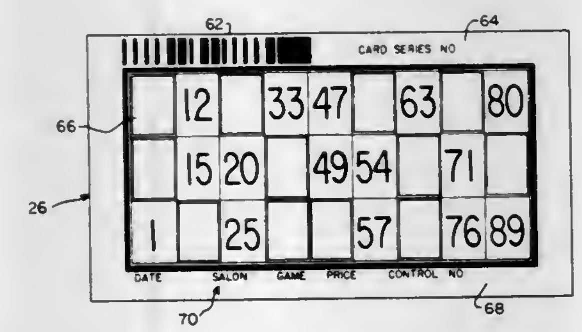

means for calculating the value of all cards printed and the award for a winning card.

4,373,727

VARIABLE SPEED GAMING DEVICE

Donald E. Hooker, Wilmette, and Roman A. Tojza, Chicago, both of Ill., assignors to Bally Manufacturing Corporation, Chicago, Ill.

Filed Apr. 3, 1980, Ser. No. 136,818
Int. Cl.³ A63F *5/04*
U.S. Cl. 273—143 R 13 Claims

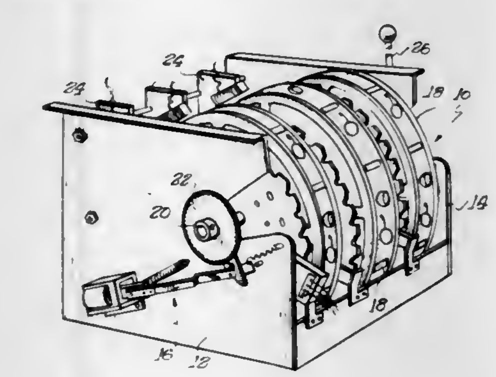

1. Apparatus for rotating the reels of a slot machine at a speed that is directly proportional to the speed in which the operating handle is pulled through its forward stroke and for stopping the reels after a period of rotation wherein the period of rotation of each reel is inversely proportional to the speed with which the handle is pulled through its forward stroke, comprising:

means for detecting the speed of forward movement of said operating handle and for generating electrical signals whose value varies in proportion to the detected speed;

means for driving said reels in response to said electrical signals, said driving means initially rotating said reels at a speed that varies in proportion to the value of said electrical signals; and

means for stopping each of the reels in response to the value of said electrical signals, the period of rotation of said reels varying in accordance with the value of said electrical signals.

4,373,728

APPARATUS FOR RANDOM NUMBER SELECTION

Willi Korzenietz, 18-06 Parsons Blvd., Whitestone, N.Y. 11357

Filed Oct. 19, 1981, Ser. No. 312,644
Int. Cl.³ A63F *5/02*
U.S. Cl. 273—144 B 3 Claims

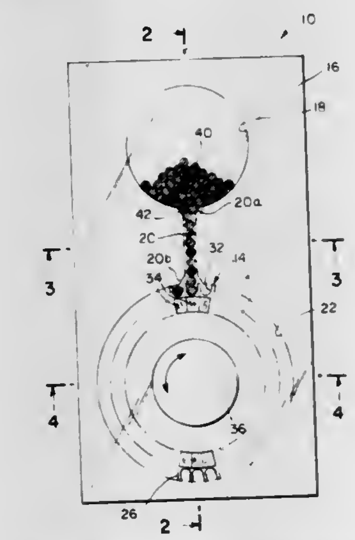

1. Apparatus for dual random number selection which comprises:

(a) a base having a mixing reservoir, a well having a central aperture and a conduit between said mixing chamber and said well;

(b) a plurality of colored filler balls stationed in said mixing reservoir in said base;

(c) a plurality of different colored winning balls stationed in said mixing reservoir in said base;

(d) a wheel assembly having a wheel with a plurality of receptacles on its circumference each of which are randomly numbered on the top surface of said wheel, a lower shaft affixed to the bottom central surface of said wheel that mates with said central aperture in said well of said base whereby said receptacles are level with said conduit of said base and an upper shaft affixed to the top central surface of said wheel;

(e) a transparent cover affixed to said base having an aperture that allows said upper shaft of said wheel assembly to extend above top surface of said cover; and

(f) a knob having an aperture in the bottom surface that mates with said upper shaft of said wheel assembly whereby said wheel is free to rotate clockwise or counterclockwise between said base and said cover so each said receptacle is able to receive one said filler ball or said winning ball that travels from said mixing chamber into said conduit in said base when said apparatus is placed in a vertical position.

4,373,729

PUZZLE WITH ROTATABLE BLOCKS AND FACE PORTIONS SLIDABLE THEREBETWEEN

Steven P. Hanson, Rancho Palos Verdes, Calif., and Jeffrey D. Breslow, Highland Park, Ill., assignors to Marvin Glass & Associates, Chicago, Ill.

Filed Jan. 12, 1981, Ser. No. 224,466
Int. Cl.³ A63F *9/08*
U.S. Cl. 273—153 S 10 Claims

1. A game device comprising:

a plurality of blocks each having a plurality of sides and a pair of opposed ends, at least two of said blocks being rotatable with respect to a third block, said blocks being connected together in a columnar array with their ends in abutment, for relative rotation around a common axis;

a plurality of face portions slidably retained on the sides of said blocks for sliding movement from one block to another in a direction generally parallel to said common axis, the number of face portions being one less than the number of block sides, to permit movement of said face portions parallel to said common axis from one block to another;

means for preventing sliding movement of said face portions around said common axis, with respect to the block upon which said face portions are mounted; and

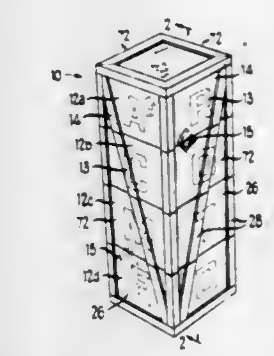

indicia means on each of said face portions for distinguishing said face portions from one another and defining a predetermined arrangement of said face portions on said device in order to implement a game wherein a player attempts to arrange the face portions in the desired arrangement by rotating said blocks with respect to one another and sliding said face portions from one block to another.

4,373,730

MULTI PANEL VISUAL DEVICE

Irving M. Koltz, 1329 Steeles Ave W. TH #4, Willowdale, Ontario, Canada (M2R3N2)

Filed Nov. 17, 1980, Ser. No. 207,393
Int. Cl.³ A63F *9/08*
U.S. Cl. 273—155 15 Claims

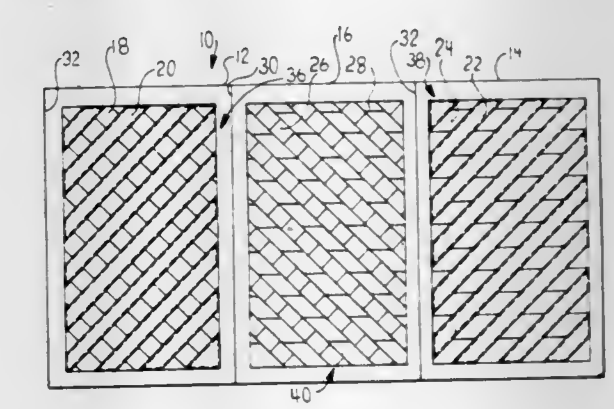

1. A novelty or educational device comprising in combination:

(a) a first panel, said first panel having a first group of illustration segments in a predetermined pattern,

(b) at least one overlay panel contiguous with said first panel and separated therefrom by a fold line, said overlay panel having a plurality of window areas arranged in a pattern corresponding to said predetermined pattern, and a second group of illustration segments on non-window areas, said second group of illustration segments being the complement of said first group of illustration segments,

and wherein said window areas being in a complex pattern alternating from window to solid area in both the horizontal and vertical directions whereby the illustrations of said illustration segments are obfuscated,

and wherein both the reverse and the obverse of each panel contains illustrations segments which are the compliment

of illustration segments of other panels, thereby providing at least a second illustration.

4,373,731
BOARD GAME
Dennis J. C. Whiteman, 122 Maude St., Geelong, Victoria, and Gary R. C. Whiteman, 122 Maude St., Gellong, Victoria, both of Australia
Filed Apr. 14, 1980, Ser. No. 140,389
Int. Cl.^{3} A63F *3/00*
U.S. Cl. 273—262 **10 Claims**

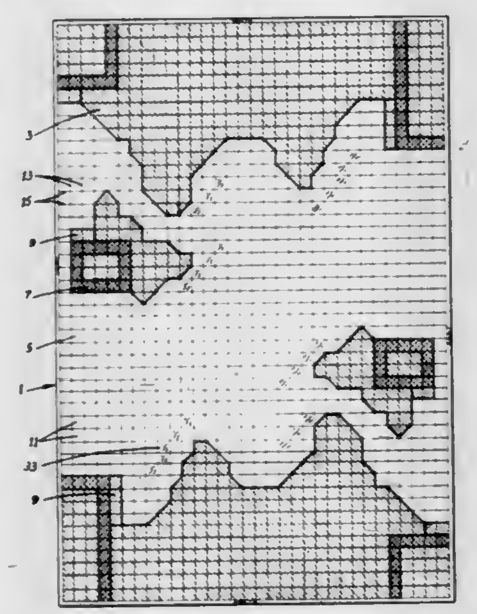

1. A war game combining elements of skill and chance including:
a playing board having a grid pattern thereon made of contiguous segments, said playing board being divided into land areas having land indicia thereon comprising at least one grid segment called a land segment, and sea areas having sea indicia thereon comprising at least one grid segment called a sea segment;
a plurality of sets of playing pieces adapted for movement within prescribed areas;
a random number generator;
at least one fort area on said playing board comprised of a plurality of contiguous segments surrounded by either contiguous fort perimeter segments having fort perimeter indicia thereon or surrounded by a combination of contiguous fort perimeter segments and the border of said board; and
a plurality of removable fort block means, one fort block means placed on each said fort perimeter segment, capable of being removed therefrom, for allowing entry into said fort areas by at least one type of playing piece when at least one fort block means is removed.

4,373,732
TRAVEL GAME
Jim W. Ogilvie, 524 Wolfberry Rd., Richmond, Va. 23235
Filed Jun. 29, 1979, Ser. No. 53,622
Int. Cl.^{3} A63F *3/00*
U.S. Cl. 273—271 **7 Claims**

1. A method of playing a game with polyhedron-shaped blocks having indicia on a plurality of sides of each of said blocks representing a scene commonly viewed along a route of travel, said method employing the following steps:
observing scenes along a route of travel corresponding to scenes represented by indicia on sides of said blocks;
arranging said blocks in rows and columns, with each of said arranged blocks displaying one side thereof prominently;
orienting said blocks in said rows and columns to have particular predetermined orientations upon players observing scenes represented by the indicia on the sides of said respective blocks;

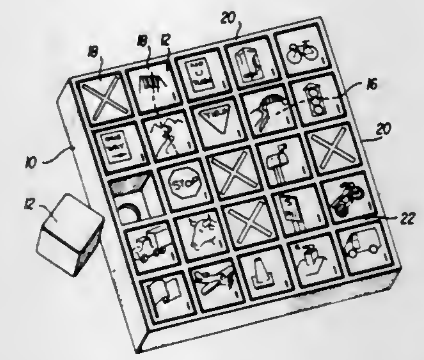

whereby, said players orient said blocks until they achieve a pre-set orientation pattern or until a time or distance limit is reached.

4,373,733
REACTIONARY HUMAN SILHOUETTE TARGET
Marvin F. Smith, Jr., P.O. Box 832, Willcox, Ariz. 85643
Filed May 13, 1981, Ser. No. 263,151
Int. Cl.^{3} F41J *5/00, 5/06*
U.S. Cl. 273—381 **7 Claims**

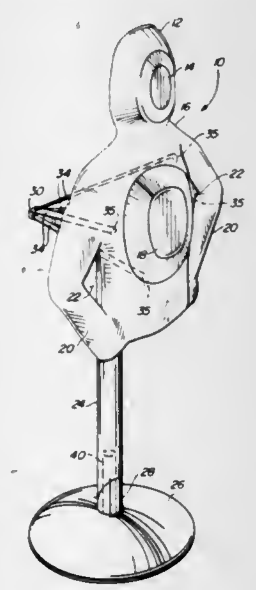

1. A target for shooters which gives specific indication of where struck when struck at different locations by a bullet comprising a defined silhouette type target of a durable material, a stand resting on the ground, and pivotal means interposed between said silhouette type target and said stand, said pivotal means attached to said silhouette type target generally in the central area thereof, said pivotal means adapted to permit deflection by said silhouette type target to either side, top, or bottom in response to a hit remote from said central area, and said pivotal means also adapted to permit the silhouette type target to move in a straight line away from and upward from the shooter in response to a hit in said central area, whereby said pivotal means permits the target when struck, to deflect or move indicative of where struck, including the central area, the target being responsive at the location where struck with movement carrying through the momentum transferred by the striking bullet.

4,373,734
DISK THROWING GAME
Charles E. Frank, 1759 Chancery #3, Memphis, Tenn. 38116
Filed Jun. 1, 1981, Ser. No. 269,327
Int. Cl.^{3} A63B *67/06, 63/00*
U.S. Cl. 273—411 **11 Claims**

1. A game which involves first and second opposing teams attempting to score points by throwing a flying disk in a desired manner, said game comprising:
(a) goal means for selectively receiving a flying disk thrown by one of the members of the first or second opposing teams, said goal means including a hollow body member having at least one opening therein of a shape which allows the flying disk to enter the interior of said body member therethrough; and
(b) playing field means positioned adjacent said goal means for controlling the action of the first and second opposing teams during the playing of said game, said playing field means including a serving area for allowing one member of one of the first or second opposing teams to introduce a flying disk into said game by throwing the disk to another member of the first or second opposing teams, said playing field means including a player interaction area

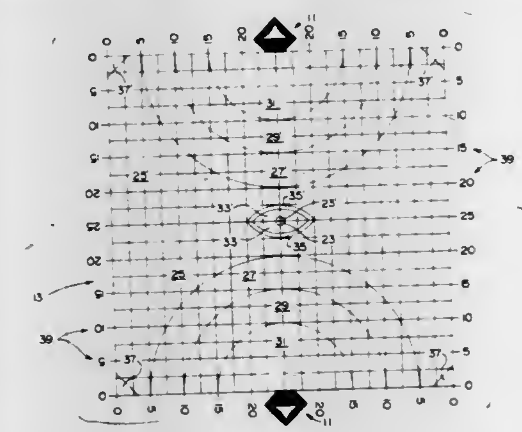

adjacent said serving area for allowing one of the members of the first or second opposing teams to catch the disk as the disk is thrown from said serving area and for allowing the members of the first and second opposing teams to interact with one another in a manner in which one of the opposing teams attempts to move the disk toward said goal means while the other of the opposing teams attempts to prevent the disk from being moved toward said goal means, said playing field means including a shooting area adjacent said player interaction area for allowing one of the members of the first or second opposing teams to throw the disk at said opening in said body member of said goal means, said playing field means including a shot-blocking area intermediate said shooting area and said goal means for allowing the members of one of the first or second opposing teams to block the throw of the disk from said shooting area to said goal means.

4,373,735
SOFT MATERIAL SEALING DISC USED AS HEAD GASKET
Martin Morsbach; Friedhelm Stecher, both of Burscheid, and Eberhard Stöcker, Herdorf, all of Fed. Rep. of Germany, assignors to Goetze AG, Burscheid, Fed. Rep. of Germany
Filed Sep. 17, 1979, Ser. No. 76,210
Claims priority, application Fed. Rep. of Germany, Sep. 15, 1978, 2840154
Int. Cl.^{3} F16J *15/12*
U.S. Cl. 277—235 B **13 Claims**

1. A porous soft material sealing gasket, comprising a soft material in the form of an asbestos fiber web having a sealing face and an impregnating agent, said asbestos fiber web containing free pores and a multiplicity of perforations in its unimpregnated form, and said impregnating agent filling at least a

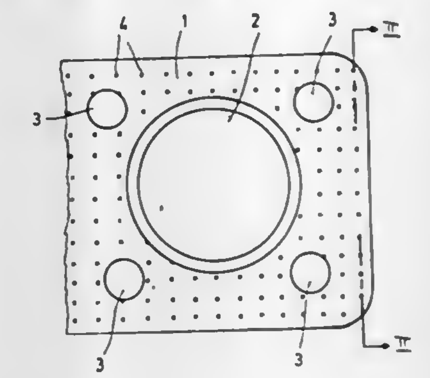

part of the free pores of the web by penetrating through the perforations during impregnation.

4,373,736
TWO WHEEL ROLLER SKATE
Leo F. Stumbaugh, 6780 SE. 125th St., Box 24, Belleview, Fla. 32620
Filed Dec. 22, 1980, Ser. No. 219,267
Int. Cl.^{3} A63C *17/02*
U.S. Cl. 280—11.23 **2 Claims**

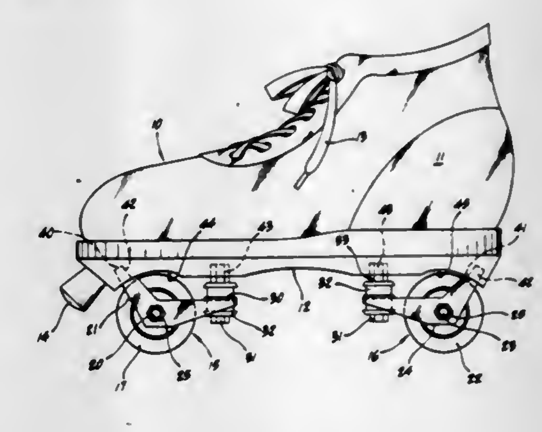

1. A two wheel roller skate, comprising:
(a) a shoe,
(b) a sole attached to the shoe,
(c) front and rear wheel assemblies, each assembly including a wheel, an axle carrying the wheel and an axle fork carrying the axle, the axle fork including:
1. opposed side portions receiving an associated axle in bearing relation, and having first interconnected ends and second unconnected ends, and
2. fastener means selectively operatively attaching said interconnected ends to said sole, the unconnected ends being received by said sole in bearing relation,
(d) the sole including front and rear pairs of opposed side slots which receive the side portion unconnected ends in bearing relation, the side portion unconnected ends and fastener means providing a three-point connection to the sole, and
(e) said side portion unconnected ends including portions received by the sole slots and bearing margins directly engaging the bottom surface of the sole.

4,373,737
GAME CARRIER

Thomas R. Cory, 2354 Tecumseh, Brooklyn, Mich. 49230; Lyman R. Cory, 13861 Vischer, Brooklyn, Mich. 48230, and Edward P. Maloney, 22170 W. Nine Mile, Southfield, Mich. 48034

Filed Oct. 22, 1980, Ser. No. 199,470
Int. Cl.^{3} B62B *1/04*

U.S. Cl. 280—30 **4 Claims**

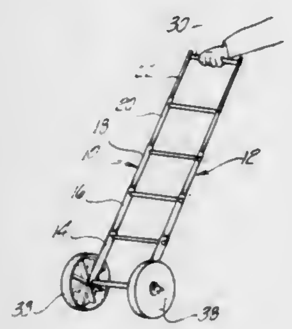

1. A game carrier comprising:
a pair of extendable rail members, each rail member being movable between a contracted position and an extended position,
means for selectively locking each rail member in its extended position,
at least two cross supports attached in a spaced apart relationship transversely between said rail members when said rail members are in their extended position,
a wheel detachably rotatably mounted to one end of each rail member, said wheels being axially aligned with each other, and
wherein each wheel further comprises a circular side wall and an annular rim extending axially outwardly from one side of the outer periphery of the side wall, and means for detachably locking the free edge of the wheel rims together thus forming a storage chamber therebetween.

4,373,738
STEERABLE AUXILIARY WHEEL ASSEMBLY FOR VEHICLES

Dennis M. Lange, 3016 S. Sylvania Ave., Sturtevant, Wis.
Continuation-in-part of Ser. No. 144,182, Apr. 28, 1980, abandoned. This application Apr. 19, 1982, Ser. No. 369,933
Int. Cl.^{3} B62D *13/00*

U.S. Cl. 280—81.5 **9 Claims**

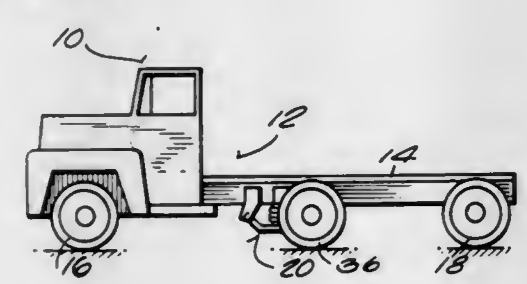

8. An auxiliary wheel assembly for a vehicle including a frame which has a pair of longitudinal frame members including a bottom edge and is supported by a pair of steerable front wheels interconnected by a tie rod and rear drive wheels, said assembly comprising
a transverse axle member extending below the vehicle frame members and having a generally U-shape with a central portion extending outwardly beyond the vehicle frame members and having opposie outer end portions upwardly offset from said central portion;
a king pin assembly on each of the outer end portions of said axle member;
an auxiliary wheel rotatably mounted on each of said king pin assemblies for steering movement;
a tie rod interconnecting said auxiliary wheels so they steer together;
a pair of laterally-spaced, generally longitudinally extending arm, each having one end carrying said axle member and the other end mounted on a vehicle frame member for pivotal movement of said axle member about an axis located below the bottom edges of the vehicle frame members between an operating position wherein said auxiliary wheels are in engagement with the ground and a retracted position wherein said auxiliary wheels are raised above the ground and said central portion of said axle member is retracted to position immediately adjacent the bottom edges of the vehicle frame members and the rotational axes of said auxiliary wheels are located above the bottom edges of the vehicle frame members;
actuation means for moving said axle member between the operating and retracted positions, said actuation means including means connected between the vehicle frame member and said arms for biasing said axle member toward the retracted position, an inflatable air spring disposed between the bottom edge of each vehicle frame member and each of said arms at a location between said axle member and the pivot axis of said arm, and means for selectively pressurizing said air spring to move said axle member from the retracted position to the operating position against the biasing force of said biasing means and for selectively depressurizing said air springs to permit said biasing means to return said axle member from the operating position to the retracted position;
a slave cylinder filled with an actuating fluid and housing a piston carried on an externally extending piston rod connected to said front wheel tie rod for reciprocative movement in response to steering movement of said front wheels;
a drive cylinder filled with said actuating fluid and housing a piston carried on an externally extending piston rod connected to said auxiliary wheels to steer said auxiliary wheels in response to reciprocative movement of said drive cylinder piston; and
conduit means filled with said actuating fluid and interconnecting said slave and drive cylinders in fluid communication such that reciprocative movement of said slave cylinder piston causes reciprocative movement of said drive cylinder piston.

4,373,739
AXLE BOLSTER PIVOT ASSEMBLY

John E. Klem, Waukegan, Ill., assignor to International Harvester Co., Chicago, Ill.

Filed Jun. 27, 1980, Ser. No. 163,611
Int. Cl.^{3} B60G *5/00*

U.S. Cl. 280—111 **10 Claims**

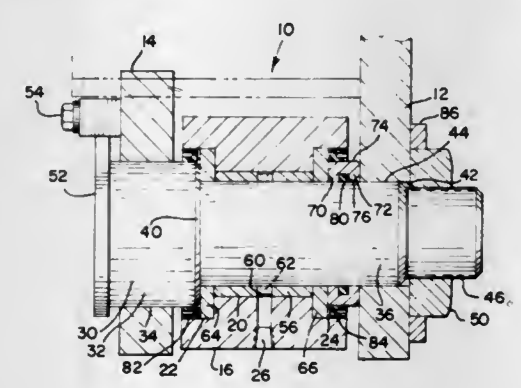

1. In an off-highway four wheel drive articulated loader having a main transverse frame and a rear axle bolster pivotally mounted to said main frame providing a rear axle suspension, the improvement comprising:
a rear axle bolster frame having a bore therethrough aligned with a transverse centerline of said main frame, said through bore provided with an inboard counterbore and an outboard counterbore;
a pivot pin disposed in fixed position in aligned bores of a forward wall and a rear wall of said main frame, said pivot pin having a first and a second diameter portion, said first diameter portion being larger than said second diameter portion and providing a shoulder between said first and second diameter portions, said first diameter portion being disposed in said bore of said rear wall and said second diameter portion being positioned in said through bore of said rear axle bolster, said second diameter portion also extending through said bore of said forward wall of said main frame;
a bushing located in said through bore of said bolster frame between said bolster frame through bore and said second diameter portion of said pivot pin;
an inboard thrust bushing and an outboard thrust bushing located respectively in the inboard and outboard counterbores of said bolster frame through bore;
a spacing member carried on said second diameter portion of said pivot pin between said outboard thrust bushing and said main frame forward wall, said spacing member having an outside diameter the same as said first diameter portion of said pin; and
a pair of identical wiper seals, a first of said pair carried on said first diameter portion of said pivot pin in contact with said inboard counterbore and a second of said pair of wiper seals carried on said spacing member in contact with said outboard counter bore.

4,373,740
THREE-WHEEL VEHICLE

Willie J. Hendrix, 23 W. Broadway, Central Nyack, N.Y. 10960
Filed Oct. 31, 1980, Ser. No. 202,623
Int. Cl.^{3} B60K *5/06, 5/08*

U.S. Cl. 280—269 **6 Claims**

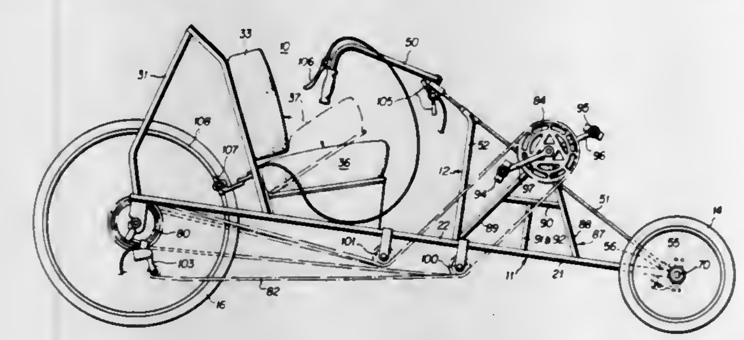

1. A three-wheel velocipede with a rear driving wheel driven by a sprocket and a pair of front steering wheels, the velocipede comprising:
a frame having a base for supporting the wheels and a superstructure for supporting a crank with a sprocket for driving a chain which is trained around the rear wheel sprocket, steering gear with a steering column, and a seat with a back rest, the seat resting on top of the base; said base having a pair of side rails which converge from the front end of the velocipede toward a middle section thereof and diverge from the middle section to the rear end of the vehicle, said side rails forming a fork for supporting the axle of the rear wheel between the rails, said base further including a plurality of bracing tubes a first of which extends between the side rails at the front end thereof, a second of which extends between the side rails intermediate the front end and middle section, and a third which extends between the side rails just forward of the rear wheel;
said superstructure including a single, inverted, V-shaped stanchion for supporting the crank, the stanchion having one leg connected to the second tube and the other leg to the middle section of the frame; a pair of inverted U-shaped supports for supporting the back rest of the seat each support having one leg connected to the frame adjacent the third brace and the other leg connected at the rear end of the base; and a second stanchion projecting upwardly from the middle section of the base for journaling the steering column therein.

4,373,741
FRONT FORK AND FORK HEAD FOR MOTORCYCLES

Peter Resele, and Manfred Haslinger, both of Graz, Austria, assignors to Steyr-Daimler-Puch Aktiengesellschaft, Vienna, Austria

Filed Apr. 28, 1980, Ser. No. 144,416
Claims priority, application Austria, May 16, 1979, 3613/79
Int. Cl.^{3} B62K *21/02*

U.S. Cl. 280—279 **1 Claim**

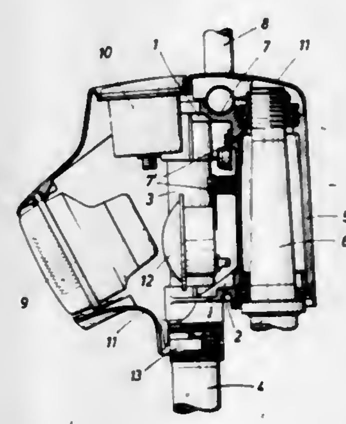

1. In a fork for motorcycles, comprising two fork blades; a fork head comprising a body integrally formed with two sockets, an upper and lower cross-piece connecting said sprockets, two laterally open shell sections adjacent the lower crosspiece, the shell sections being aligned with respective ones of said sockets and being in conforming engagement with part of the periphery of respective ones of said fork blades, each of said fork blades fitting in one of said sockets; a clamp member secured to each of said shell sections and in conforming engagement with another part of the periphery of respective ones of said fork blades; and tangentially extending screws securing each clamp member to a respective one of said shell sections and tightened to force the clamp members against the fork blades.

4,373,742
SKI BINDING PART

Josef Svoboda, Schwechat, Austria, assignor to TMC Corporation, Baar, Switzerland
Division of Ser. No. 957,089, Nov. 2, 1978, Pat. No. 4,299,404. This application Mar. 26, 1981, Ser. No. 247,692
Claims priority, application Austria, Mar. 3, 1978, 1546/78
Int. Cl.^{3} A63C *9/24*

U.S. Cl. 280—633 **8 Claims**

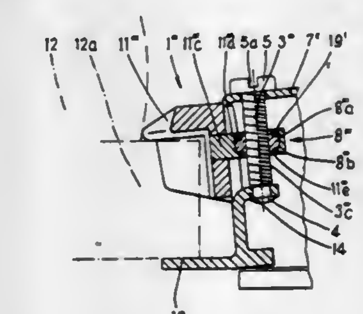

1. A ski binding part for use in holding a ski boot onto a ski, comprising:
a frame supported on said ski;
a sole holder adapted to engage the upper surface of the sole of said ski boot and having an opening therethrough;
a threaded bolt rotationally supported on said frame, extending through said opening in said sole holder and having a

diameter less than the smallest cross-sectional dimension of said opening;

a coupling part having an internally threaded opening therein threadedly engaging said bolt, disposed within said opening in said sole holder, and having a first friction surface thereon; and

coupling means provided on said sole holder including a second friction surface cooperable with said first friction surface on said coupling part for preventing relative axial movement between and for rotationally frictionally slip coupling said coupling part and said sole holder;

whereby said sole holder and coupling part move axially along said bolt in response to rotation of said bolt until said sole holder engages said upper surface of said ski boot sole, whereupon continued axial movement of said sole holder and said coupling part in response to continued rotation of said bolt will be resisted by said ski boot sole and said coupling part will rotate relative to said sole holder to thereby control the force exerted by said sole holder on said upper surface of said ski boot sole.

4,373,743

WHEEL SUSPENSION SYSTEM FOR VEHICLES

Charles F. Parsons, Jr., 1760 Plymouth Ct., Wheaton, Ill. 60187

Filed Nov. 21, 1980, Ser. No. 208,855

Int. Cl.³ B62D *17/00*

U.S. Cl. 280—661 **6 Claims**

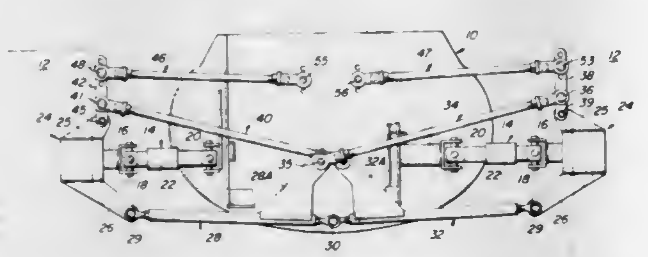

1. A wheel suspension system for a vehicle having a frame, comprising in combination,

first and second wheel supports located on opposite sides of said frame and each having wheel mounting axle means thereon,

two pairs of upper and lower links respectively having one outer end of said lower links pivotably attached to a lower portion of one of said wheel supports, and having the other ends of said lower links pivotably attached to said frame for pivotal movement relative to a fore and aft axis,

the inner ends of said upper links being pivotably connected to a respective one of said lower links,

first and second levers respectively and pivotably attached to an upper portion of one of said wheel supports,

the outer ends of said upper links being respectively and pivotably attached to said levers, and

first and second camber control links each pivotably attached at one end to said frame for pivotal movement about a fore and aft axis and pivotably attached at the other end to one of said levers.

4,373,744

SUSPENSION CONTROL SYSTEM FOR A ROAD VEHICLE

Stanley G. Glaze, Brierley Hill, England, assignor to Lucas Industries Limited, Birmingham, England

Filed Dec. 31, 1980, Ser. No. 221,707

Claims priority, application United Kingdom, Jan. 23, 1980, 8002317

Int. Cl.³ B60G *11/26*

U.S. Cl. 280—707 **8 Claims**

1. A control system for a hydraulic suspension arrangement on a road vehicle which has a plurality of wheel groups, each said wheel group including one or more wheels each of which has a hydraulic suspension, the suspensions in each said group having a common hydraulic connection, the said control system comprising means for generating first electrical signals corresponding to the vertical accelerations of the respective wheel groups, means responsive to said first electrical signals for generating second electrical signals corresponding to the calculated vertical displacements of the respective wheel groups resulting from said accelerations, means for generating

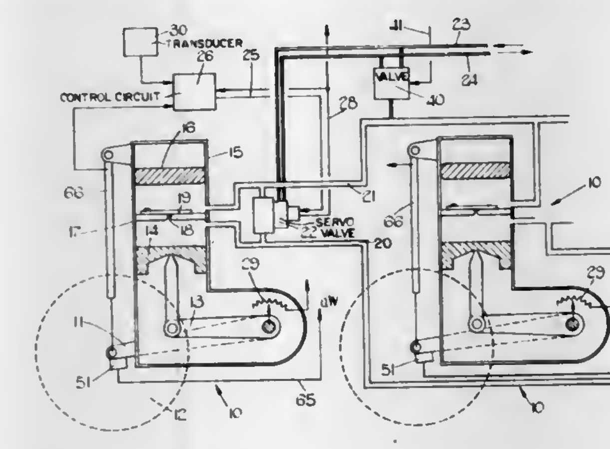

third electrical signals corresponding to measured vertical displacement of the respective wheel groups, and means, responsive to differences between corresponding ones of said second and third signals, for controlling fluid flow between a source and the hydraulic suspensions of the respective wheel groups.

4,373,745

DASH PANEL CONSTRUCTION

Yoshio Matsuno, Yokohama, Japan, assignor to Nissan Motor Co., Ltd., Yokohama, Japan

Filed Sep. 24, 1980, Ser. No. 190,283

Claims priority, application Japan, Sep. 28, 1979, 54-135499[U]

Int. Cl.³ B60K *37/00*

U.S. Cl. 280—752 **2 Claims**

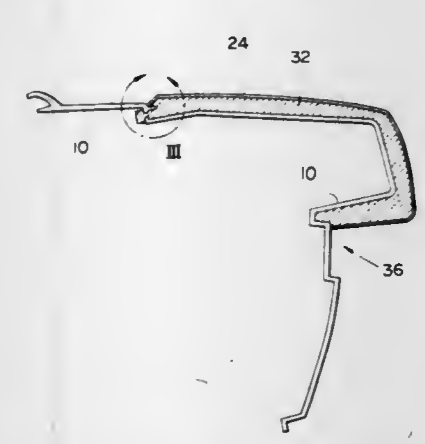

1. A dash panel comprising: a structural panel member having a step like portion, an integral flange on said panel member protruding from said step like portion and cooperating with adjacent surfaces on a first side of said panel member to define a cavity, apertures the step portion of in said panel member opening into said cavity, and an elastomeric pad molded on the first side of said panel member, with the flange on said panel member protruding into said pad and with said pad having integral portions protruding through said apertures to terminate as locking blocks which are engageable with an opposite second side of said panel member.

4,373,746

LEG PROTECTOR FOR PASSENGER IN VEHICLE

Hiroo Okuyama, Yokohama, Japan, assignor to Nissan Motor Company, Limited, Kanagawa, Japan

Filed Dec. 11, 1980, Ser. No. 215,255

Claims priority, application Japan, Dec. 12, 1979, 54-172085[U]

Int. Cl.³ B60R *21/00*

U.S. Cl. 280—752 **5 Claims**

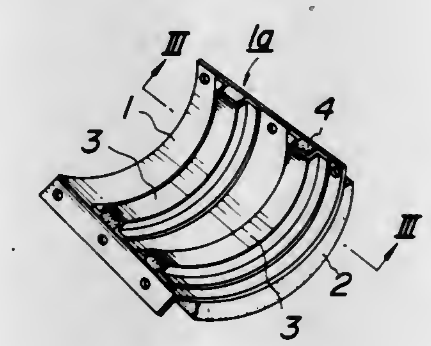

1. A leg protector for a passenger in a vehicle, said protector being made of a panel in the form of a curved body extending toward a seat for the passenger and provided with a pad adhered to a surface facing said seat, said panel further being in the form of a hemicylindrical member whose longitudinal axis is substantially horizontal and comprising at least one closed channel substantially vertically extending along said curved body and filled with an energy absorption material for absorbing kinetic energy from the legs of a passenger upon collision of the vehicle.

4,373,747

PASSIVE SAFETY BELT DEVICE

Junichi Takizawa, Isesaki, and Nobuo Satoh, Ohta, both of Japan, assignors to Fuji Jukogyo Kabushiki Kaisha, Tokyo, Japan

Filed Jun. 10, 1980, Ser. No. 158,178

Claims priority, application Japan, Jul. 17, 1979, 54-98656[U]

Int. Cl.³ B60R *21/10*

U.S. Cl. 280—802 **5 Claims**

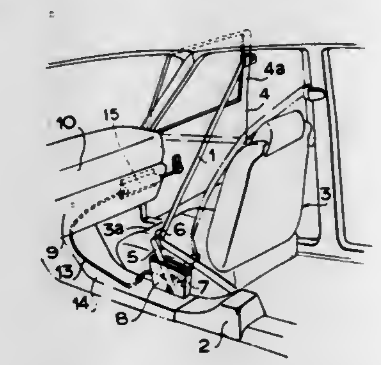

1. A passive safety belt device for a vehicle having a door with an inner panel and a knee pad under an instrument panel on a dash-board comprising

a retractor provided in a lower portion of a central portion of the vehicle,

a safety belt connected between said retractor and the door of the vehicle at a rear portion thereof,

a belt guiding member engaged with said safety belt, said belt guiding member being mounted moveable between a backward fastening position near an occupant's waist and a forward releasing position apart from the occupant's waist, and

a non-sheathed cable connected between said belt guiding member and said door, said cable passing through said knee pad provided under the instrument panel of the vehicle and projecting from an end portion of said knee pad adjacent to said inner panel of said door and being connected to the inner panel at an outer end of the cable.

4,373,748

SEAT BELT RETRACTING AND LOCKING MECHANISM

Kenneth H. Reid, Mt. Clemens, and Bernard J. Finn, Troy, both of Mich., assignors to General Motors Corporation, Detroit, Mich.

Filed Oct. 28, 1980, Ser. No. 201,514

Int. Cl.³ A62B *35/02;* **B65H** *75/48*

U.S. Cl. 280—806 **3 Claims**

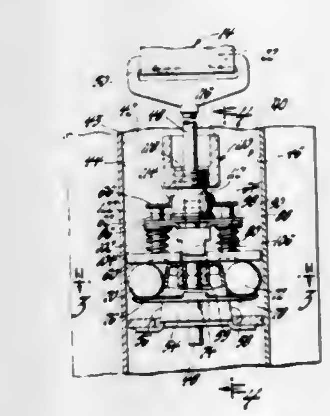

1. A restraint belt retracting mechanism comprising:

a tubular housing mounted in vertical orientation on the vehicle body and having a central axial extending passage therethrough defined by an inner wall;

a ramp member carried by the belt and movable axially within the housing during belt extension and retraction, said ramp member having a ramp surface facing the housing inner wall;

a wedge member interposed between the housing inner wall and the ramp member and engaging the ramp surface thereof so that the wedge member is moved radially relative the inner wall upon axial movement relative the ramp member;

spring means urging the wedge member to a normal position spaced away from the inner wall and being yieldable upon occurrence of belt and ramp member acceleration causing movement of the wedge member in the belt extending direction to lag behind the ramp member so that the wedge member is forced radially outward by the ramp surface to forcibly engage the inner wall and lock the ramp member and belt against belt extending movement;

an inertia sensing means responsive to vehicle deceleration and adapted to effect axial movement of the wedge member relative the ramp member and concomitant radial outward movement thereof into engagement with the inner wall to lock the ramp member and restraint belt against belt extending movement.

4,373,749

SEAT BELT RETRACTOR

Hiroyuki Miki, and Hideoki Matsuoka, both of Yokohama, Japan, assignors to Nissan Motor Co., Ltd., Yokohama, Japan

Filed Nov. 4, 1980, Ser. No. 203,930

Claims priority, application Japan, Nov. 10, 1979, 54-156050[U]

Int. Cl.³ A62B *35/00*

U.S. Cl. 280—807 **3 Claims**

1. For use in an automotive vehicle having a vehicle body floor, a seat belt retractor including:

a retractor casing provided at the approximate center of the vehicle body floor;

a pair of seat belts adapted to retain two adjacent passengers, each of the seat belts having a webbing;

a pair of winding shafts mounted vertically in the casing for winding the pair of webbings; and

improved guide means for guiding the webbing smoothly

and free of twisting towards and away from the winding shafts, said improved guide means comprising:

a pair of elongate rings each having a slot therein through which a webbing passes in its travel towards and away from a winding shaft, said pair of elongate rings having a pair of guiding portions forming the upper equal sides of

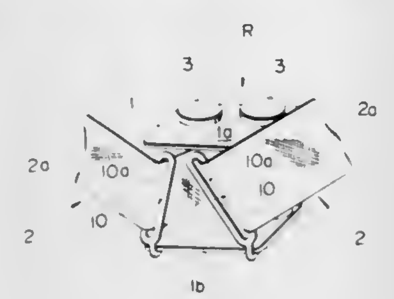

an isosceles triangle for slidably guiding the pair of webbings; and

means in the casing for pivotally supporting the intermediate portion of each elongate ring, each said ring pivoting in response to the forces applied by the sliding webbing and thereby maintaining each webbing smooth and twist-free.

4,373,750
JOINT FOR PIPE INTENDED FOR PETROLEUM INDUSTRY

Jean Mantelle, Aulnoye Aymeries, and Georges Trouillet, Aulnoye, both of France, assignors to Societe Anonyme dite: Vallourec, Paris, France

Filed Oct. 28, 1980, Ser. No. 201,472

Claims priority, application France, Oct. 30, 1979, 79 26890

Int. Cl.³ F16L ***9/14***

U.S. Cl. 285—55 **11 Claims**

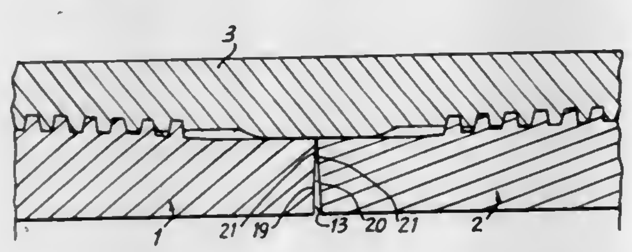

1. A pipe joint structure comprising: externally threaded male members and an internally threaded coupling sleeve, said coupling sleeve threadedly engaging said male members, said sleeve having a substantially cylindrical internal seal surface located between the threads thereon, each of said male members having a thread-free end portion with a substantially cylindrical external seal surface that before make-up has an outer diameter at least equal to the inner diameter of said internal seal surface on said sleeve and which engages said internal seal surface when said joint is made up, said male members having tip regions at the outer peripheries of their said end portions that provide first contact between said end portions as said joint is made up and then tend to move radially outward as said joint is tightened to provide fluid tight sealing engagement of said external seal surfaces with said internal seal surface, said end portions having surface means on the front faces thereof adjacent said tip regions that are shaped to provide a space that increases in size toward the center of said joint prior to make-up and decreases in size during make-up.

4,373,751
EXHAUST ADAPTER FOR EXHAUST GAS MEASUREMENTS

Karl Schober, Weinstadt, and Fritz Groll, Fellbach, both of Fed. Rep. of Germany, assignors to Daimler-Benz Aktiengesellschaft, Stuttgart, Fed. Rep. of Germany

Filed May 15, 1980, Ser. No. 150,097

Claims priority, application Fed. Rep. of Germany, May 26, 1979, 2921417

Int. Cl.³ F16L ***39/00***

U.S. Cl. 285—137 R **4 Claims**

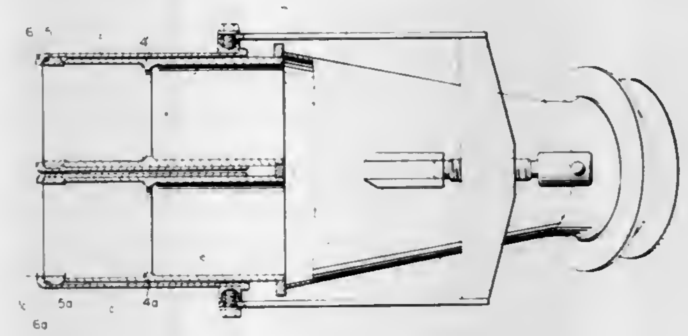

1. An exhaust adapter for enabling exhaust gas measurement, the exhaust adapter being adapted to be attached to an exhaust unit and adapted to be connected to a hose leading to an exhaust gas analyzing measuring system, the exhaust unit includes two tailpipes disposed in a side by side parallel relationship, characterized in that the exhaust adapter includes at least one outer pipe and at least one inner pipe telescopically accommodated therein, the outer and inner pipes are adapted to accommodate at least a portion of the respective tailpipes, a sealing ring is disposed between an end edge of the respective inner pipes and a collar of an associated outer pipe, a funnel shaped member is provided for combining free ends of the two inner pipes, and in that means are provided for restraining each outer pipe with respect to an associated inner pipe and for compressing the respective sealing ring so as to provide for a gastight seal of the adapter on the respective tail pipes comprising a clamping bracket having one end thereof connected to one of the outer pipes and the other end thereof connected to the other outer pipe, and a second means cooperable with the clamping bracket for restraining the respective outer pipes with respect to the associated inner pipes, the second means being adapted to rest on the funnel shaped member when the respective outer pipes are restrained with respect to the associated inner pipes.

4,373,752
WELL CASING HANGER ASSEMBLY

Norman A. Nelson, Houston, Tex., assignor to Samuel Putch, Houston, Tex., a part interest

Continuation of Ser. No. 75,568, Sep. 14, 1979, abandoned. This application Aug. 4, 1981, Ser. No. 289,935

Claims priority, application United Kingdom, Oct. 6, 1978, 39590/78

Int. Cl.³ F16L ***21/00***

U.S. Cl. 285—141 **2 Claims**

1. In an assembly for connecting first **310** and second **312** tubular members to and from each other in a well by longitudinal movement of the first member **310** relative to second member **312**, said first member **310** including an annular recess **314** in its peripheral surface and a protrusion intermediate the ends of recess **314**, generally radially extending upper **330** and lower stop shoulders on said first member **310** at respectively the top and bottom of recess **314**, an upper locking shoulder **348** on said first member **310** below and adjacent stop shoulder **330**, a lower locking shoulder **356** on said protrusion of first member **310**, a resiliently expandable and contractable locking means **316** positioned in said recess **314**, said locking means **316** being radially and axially moveable on first member **310** between said upper **330** and lower stop shoulders, an opening **358** in locking

means **316** for receiving said protrusion of first member **310** when locking means **316** is contracted, an upper locking surface and a lower locking surface on said locking means **316** for coacting respectively with said upper locking shoulder **348** and said lower locking shoulder **356** when said locking means **316** is in an expanded position, an upper locking portion **336** on the outer periphery of said locking means **316**, an upper locking notch **342** in said second member **312** for receiving said upper locking portion **336** upon expansion of said locking means **316** in a manner to prevent further downward movement of locking means **316** and to allow upward retraction of locking means **316** from locking notch **342**; the improvement comprising: an

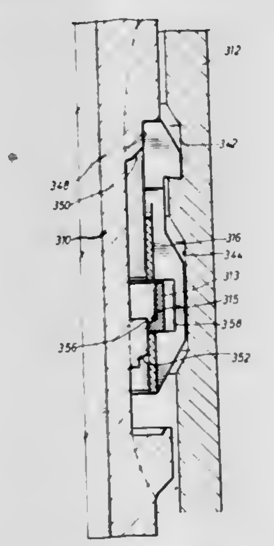

expandable and contractable, circular release spring **313** having a split to form a "C" shape, said release spring **313** positioned about the periphery of said protrusion of first member **310** and within said opening **358** of locking means **316**, said release spring, locking means and protrusion having coacting means thereon for preventing axial movement of locking means **316** relative to first member **310** when locking means **316** is in a contracted position with said protrusion positioned in said opening and for expanding said release spring into said opening allowing said locking means **316** and release spring **313** to move outwardly and upwardly relative to first member **310** upon locking portion **336** encountering locking notch **342**.

4,373,753
SPRING FINGER CONNECTOR

Ray R. Ayers, and Robert M. Kipp, both of Houston, Tex., assignors to Shell Oil Company, Houston, Tex.

Filed May 18, 1981, Ser. No. 264,317

Int. Cl.³ F16L ***37/12***

U.S. Cl. 285—319 **6 Claims**

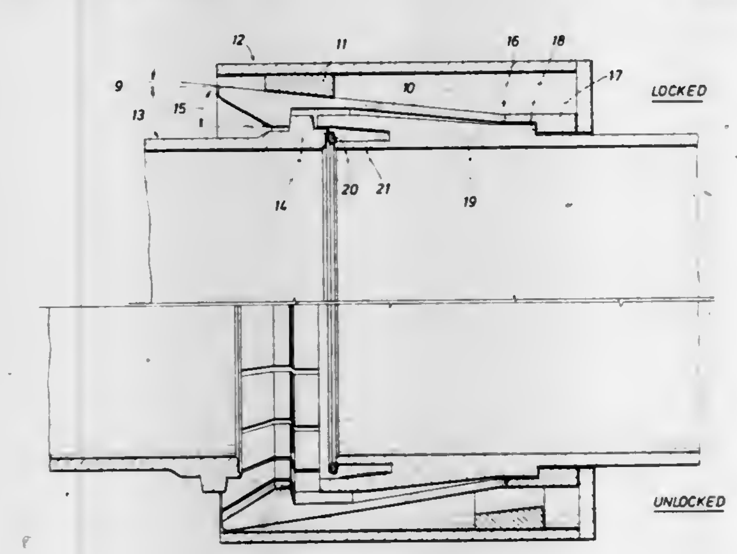

1. A connector for releasably joining the ends of two pipes together comprising:

a first hub member attached to an end of one of the two pipes and having an outer shoulder and an inner annular recess;

a cantilevered hub member attached to an end of the other of the two pipes and having an outer lip adapted to align and engage with the shoulder of the first hub member and an inner lip having an outer annular recess and a thickness of less than one-half a pipe wall thickness;

a plurality of spring expandable, contactable fingers extending from an annular shoulder and laterally across the outer lip of the cantilevered hub member to a position to be engageable with the outer shoulder of the first hub member, the fingers being adapted to lock the outer shoulder of the first hub member to a shoulder on the pipe end adjacent to the annular shoulder; and,

an annular sealing ring adapted to be seated between the inner annular recess of the first hub member and the outer annular recess of the inner lip of the second hub member, the sealing ring being adapted to inwardly deflect the inner lip of the cantilevered hub member and to coact with the inner lip to store elastic strain energy.

4,373,754
THREADED CONNECTOR

Charles A. Bollfrass; Leonard S. Landriault, and Patrick E. McDonald, all of Houston, Tex., assignors to Hydril Company, Los Angeles, Calif.

Continuation of Ser. No. 932,278, Aug. 9, 1978. This application Jun. 4, 1981, Ser. No. 270,315

Int. Cl.³ F16L ***25/00, 21/00***

U.S. Cl. 285—334 **20 Claims**

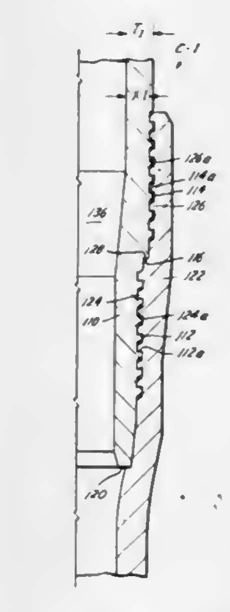

1. A high tensile strength threaded connection for releasably securing separate members by rotational make-up of a threaded male member with a threaded female member along a common longitudinal axis to form the connection, including:

a male member having an external helical thread means formed thereon, said external thread means having a negative angled loading flank relative to the longitudinal axis of the threaded connection;

a female member forming a longitudinal axis and having an internal helical thread means formed thereon, said

a female member having an internal helical thread means formed thereon, said internal thread means also having a negative angled loading flank for engaging said negative angled loading flank of said external thread means formed on said male member;

a first make-up limiting means formed on said male member;

a second make-up limiting means formed on said female member for engagement with said first make-up limiting means formed on said male member for limiting rotational make-up of said helical thread means;

a portion of external thread means having a loading flank of a smaller loading area than the remainder of said external

thread means loading flank to minimize the critical reduction of thickness of said male member; and

said female member having at least a portion thereof of reduced strength relative to the remainder of said female member located adjacent said smaller loading area loading flank of said female member to insure a more uniform distribution of the loading on the negative angled smaller area loading flanks wherein the tensile loading on the thread loading flank is distributed on said male and female members to enhance tensile strength of the threaded connection.

4,373,755

LIFTING DEVICE FOR THE TRANSPORTATION OF FLASKS

Klaus Herberholz, Taunusstrasse 31, 6457 Maintal 2, and Peter Schmidt, Huhnerberg 1, 6466 Grundau, both of Fed. Rep. of Germany

Filed Oct. 27, 1980, Ser. No. 201,196

Claims priority, application Fed. Rep. of Germany, Oct. 27, 1979, 2943523

Int. Cl.³ B66C *1/10*

U.S. Cl. 294—67 R **9 Claims**

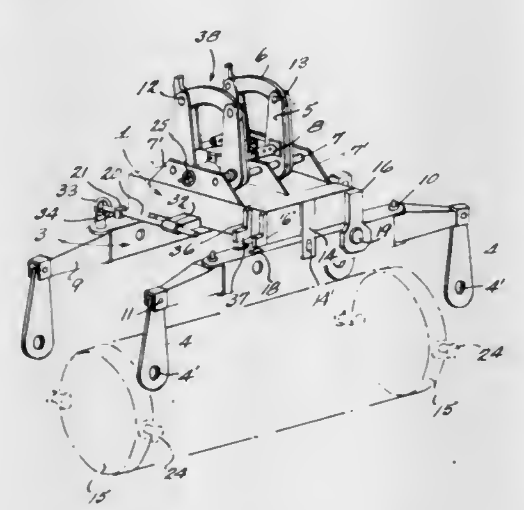

1. A lifting device for transporting flasks in a horizontal position, said flasks being provided at their ends with pairs of laterally projecting trunnions, particularly transportation flasks for radioactive materials in industrial nuclear plants, comprising:

a torsion body;

crane hook attachment structure on said body;

two cross pieces, one on each end of said body, one of said cross pieces being fixedly connected with said torsion body and the other being suspended from said body for tilting movement about a horizontal axis transverse of said other cross piece;

means for limiting such tilting movement relative to said body; and

lug side arms detachably engageable with flask trunnions, one hanging from and mounted to each end of said cross pieces for lateral adjustment relative thereto.

4,373,756

WHEELCHAIR TRAY ASSEMBLY

Geoffrey H. Purdy, Mine Hill Rd., Roxbury, Conn. 06783, and Robert R. Jackson, Oak Summit Rd., Millbrook, N.Y. 12545

Filed Oct. 16, 1980, Ser. No. 197,651

Int. Cl.³ A47B *39/00*

U.S. Cl. 297—153 **7 Claims**

1. A removable wheelchair tray assembly comprising:

a first pair of male and female telescoping members, said male and female members each having a free end;

spring means biasing said male and female members free ends toward one another;

wheelchair arm engaging hook means secured to each of said free ends;

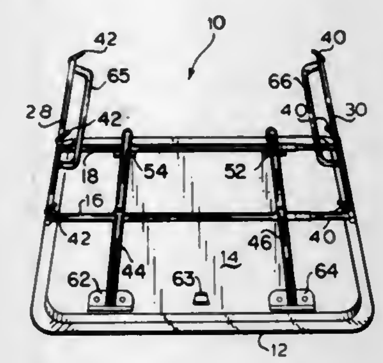

tray support means movably secured to one of said members and adapted to move transversely with respect to said member; and

a tray secured to said support means.

4,373,757

CONVEYOR TROUGH FOR A SCRAPER CONVEYOR FOR USE WITH A MINING MACHINE

Karl Gehle, and Josef Schreier, both of Bochum, Fed. Rep. of Germany, assignors to Gebr. Eickhoff Maschinenfabrik und Eisengiesserei m.b.H., Bochum, Fed. Rep. of Germany

Filed Dec. 9, 1980, Ser. No. 214,782

Claims priority, application Fed. Rep. of Germany, Dec. 13, 1979, 2950169

Int. Cl.³ F21C *35/12*

U.S. Cl. 299—43 **7 Claims**

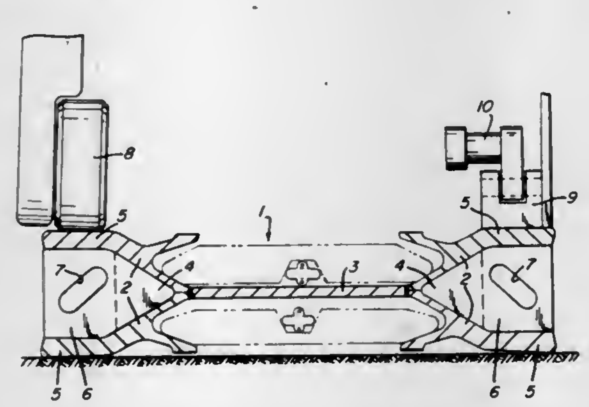

1. A conveyor trough for a scraper conveyor for use with a mining machine in underground mining, said conveyor trough comprising a trough base extending along a plane, diverging arm sections projecting laterally from each of the opposite longitudinal sides of said trough base, the arm sections at each side of the trough base forming intersecting boundaries of a V-shaped space diverging outwardly of the plane of said trough base, a flange extending outwardly from each diverging arm section which descends toward the mine floor, said flange having a width and thickness sufficient to form a machineway, and a machine flange extending from each diverging arm section which ascends above the mine floor, said machine flange having a width and thickness sufficient to form a machineway generally parallel to the mine floor for movement of a mining machine therealong.

4,373,758

MULTIPLE ROLLER BOGEY ASSEMBLY

Richard E. Livesay, Peoria, Ill., assignor to Caterpillar Tractor Co., Peoria, Ill.

PCT No. PCT/US81/01068, § 371 Date Aug. 10, 1981, § 102(e) Date Aug. 10, 1981

PCT Filed Aug. 10, 1981, Ser. No. 294,759

Int. Cl.³ B62D *55/10, 55/30*

U.S. Cl. 305—22 **13 Claims**

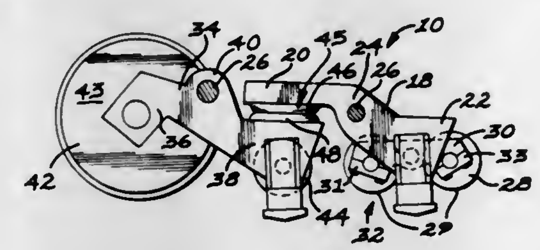

1. An undercarriage (12) adapted for use on a track-type vehicle (14), comprising:

a support frame (16);

a first bogey link (18) having first and second portions (20,22) and a pivot portion (24) intermediate said first and second portions (20,22), said first bogey link (18) being pivotably connected to said support frame (16) at said pivot portion (24);

a second link (34) having a second portion (38) and a pivot portion (40), said second link (34) being pivotably connected to said support frame (16) at said second link pivot portion (40), said second link second portion (38) being adjacent said first bogey link first portion (20), and said second link second portion (38) and said first bogey link first portion (20) each being movable in response to movement of the other;

a first wheel (28) rotatively connected to said first bogey link second portion (22); and

a third wheel (44) rotatively connected to said second link second portion (38), said third wheel (44) being intermediate said first bogey link pivot portion (24) and said second link pivot portion (40).

4,373,759

BEARING ASSEMBLIES FOR CONVEYOR ROLLERS FITTED WITH END COVERS

Brian Greener, Welwyn Garden City; Simon J. Pedder, Luton, and John P. Forknall, Dunstable, all of England, assignors to SKF (U.K.) Limited, Bedfordshire, England

Filed Mar. 10, 1980, Ser. No. 128,895

Claims priority, application United Kingdom, Mar. 9, 1979, 7908395

Int. Cl.³ F16C *33/80, 35/06*

U.S. Cl. 308—187.2 **9 Claims**

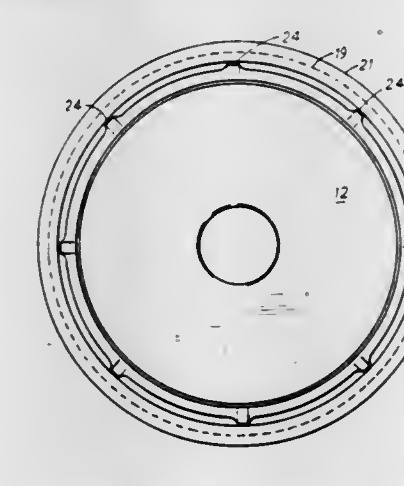

1. An end cap assembly for mounting a roller tube of a roller conveyor on a fixed shaft, comprising an annular housing adapted to be mounted in an end of the roller tube, said housing having an end wall formed with at least one annular tongue and a central recess, a bearing comprising an outer bearing ring firmly secured in said recess in the end wall of the housing, an inner bearing ring, said bearing rings having grooved tracks, and rolling elements mounted in said grooved tracks so that the bearing is adapted to resist radial forces and axial forces in both directions, an annular end cover having a central bore for passage of the shaft therethrough, said end cover having at least one annular tongue and an annular flange which extends as a close fit through the inner bearing ring, the annular tongues on said housing and end cover being interleaved to form a narrow annular tortuous labyrinth passageway between the bearing and the exterior of the end cap assembly, abutments on said end cover which engage opposite sides of the inner bearing ring to secure the end cover axially with respect to the inner bearing ring, whereby the end cap assembly is a self-contained unit in which the rotary component consisting of the housing and outer bearing ring is located axially with respect to the stationary component consisting of the end cover and the inner bearing ring by engagement of the rolling elements in said grooved tracks so that the width of the labyrinth passageway between the two components remains substantially constant, and an annular seal of resilient material compressed axially between the two components and arranged to close the inner end of said labyrinth passageway.

4,373,760

DRAWBOLT BEARING SUPPORT FOR BICYCLE PEDALS

Roger O. Durham, 1370 Thompson St., Glendale, Calif. 91201

Filed Mar. 4, 1981, Ser. No. 240,415

Int. Cl.³ F16C *9/02*

U.S. Cl. 308—179.5 **2 Claims**

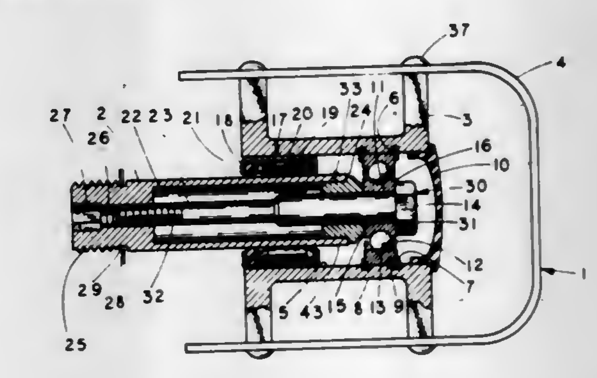

1. A drawbolt-type outboard bearing support for bicycle pedals comprising;

(a) an internally-threaded pedal spindle with an outward-facing central bore, a cylindrical outboard end, and an outboard face;

(b) a shoulder bushing having a central aperture, a cylindrical body adapted for closely engaging the outward-facing central bore of said pedal spindle, and a shoulder adapted for abutting the outboard face of said pedal spindle;

(c) a ball bearing means having an inner race with a central aperture and inboard and outboard ends;

(d) a drawbolt member having a threaded inboard end adapted for engaging the internal threads of the pedal spindle, a cylindrical body portion adapted for closely engaging the central aperture of said shoulder bushing, and adapted for engaging the central aperture of said ball bearing inner race, and a head portion adapted for bearing against the outboard end of said ball bearing inner race;

whereby the tightening of said drawbolt member secures the inner race of the ball bearing to the shoulder bushing and also secures the shoulder bushing to the outboard face of the pedal spindle.

4,373,761
COMBINED ARTICLE MOVER AND WORKER SUPPORT
Charles J. Hansberry, Jr., P.O. Box 764, Exton, Pa. 19341
Filed Aug. 22, 1980, Ser. No. 180,480
Int. Cl.³ A47B *83/00;* E04G *3/16*
U.S. Cl. 312—250 **2 Claims**

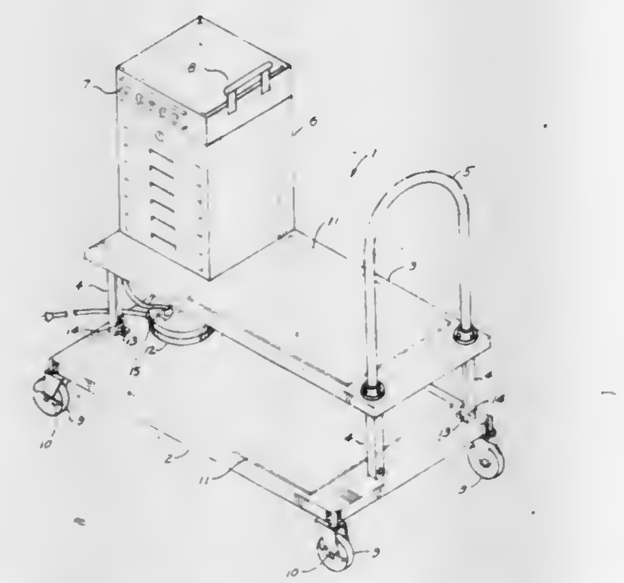

1. A combined article mover, tool support, and worker support, comprising:
a. a plurality of stepped horizontal platforms the uppermost of which supports a worker and is supported vertically by vertical frame members;
b. handle means, supported by one of said platforms, said handle means projecting vertically above the uppermost of said plurality of platforms, said handle means for both assisting a worker in maintaining balance and for moving the combined article mover, tool support, and worker support; and
c. a receptacle for tools, supported by one of said platforms, said receptacle projecting above the uppermost of said plurality of platforms and including means for assisting in maintaining the balance of a worker; and
d. electrical outlet means supported by one of said platforms.

4,373,762
AUXILIARY CONNECTOR INCLUDING FLIP ADAPTER
Joseph Shekel, New York, and Joseph DeStefano, Carle Place, both of N.Y., assignors to Auto-Line Manufacturing Corp., Copaigue, N.Y.
Filed Nov. 18, 1980, Ser. No. 207,913
Int. Cl.³ H01R *11/24, 27/00*
U.S. Cl. 339—31 B **3 Claims**

1. An auxiliary connector for connection to a top terminal battery and a side terminal battery comprising:
first and second opposed jaws;
means for resiliently urging said first and second opposed jaws toward each other whereby they are effective for grasping a top terminal of a top terminal battery;
an adapter hinged to said first jaw and having first and second positions;
said first position being an inoperative position wherein said adapter is disposed against an outer surface of said first jaw;
said second position being an operative position wherein a portion of said adapter is grasped between said first and second jaws; and

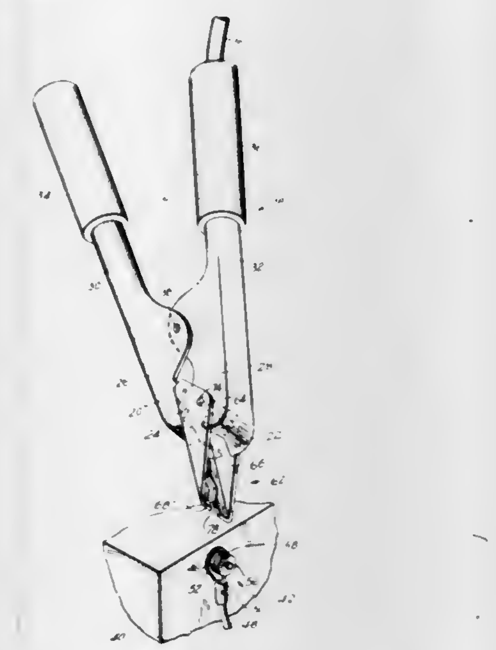

said adapter, when in said second position, having means projecting from between said jaws and effective to engage a side terminal of a side terminal battery.

4,373,763
AUXILIARY CONNECTOR INCLUDING FLIP ADAPTER
Joseph Shekel, New York, and Joseph DeStefano, Carle Place, both of N.Y., assignors to Auto-Line Manufacturing Corp., Copaigue, N.Y.
Filed May 11, 1981, Ser. No. 262,197
Int. Cl.³ H01R *11/24, 27/00*
U.S. Cl. 339—31 B **4 Claims**

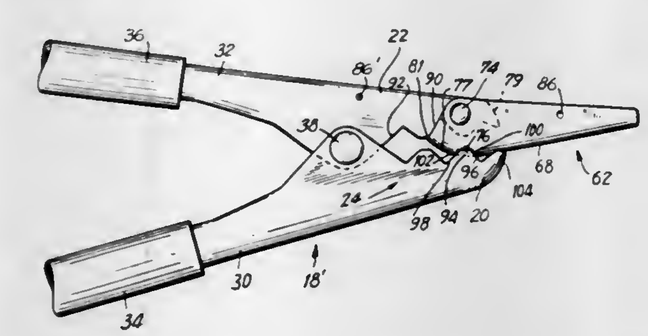

1. An auxiliary connector for connection to a top terminal battery and a side terminal battery comprising:
first and second opposed jaws;
means for resiliently urging said first and second opposed jaws together whereby they are effective for grasping a top terminal of a top terminal battery;
an adapter hinged to said first jaw and hingeable between first and second positions;
said first position being an inoperative position wherein said adapter is disposed against an outer surface of said first jaw;
said second position being an operative position wherein said adapter projects from between said first and second opposed jaws and includes attachment means effective to engage a side terminal of a side terminal battery;
means for locking said adapter in said second position;
said means for locking including at least one tooth on said second jaw and at least one locking slot in said adapter, said locking slot being aligned with, and entered by, said at least one tooth when said first and second jaws are permitted to move together while said adapter is in said second position whereby hinging of said adapter from said second position is prevented.

4,373,764
ELECTRICAL CONNECTOR
Bohdan Ulrich, Kehrsatz, Switzerland, assignor to Hasler AG Bern, Bern, Switzerland
Filed Mar. 3, 1981, Ser. No. 239,892
Claims priority, application Switzerland, Mar. 28, 1980, 2461/80
Int. Cl.³ H01R *13/629*
U.S. Cl. 339—75 MP **28 Claims**

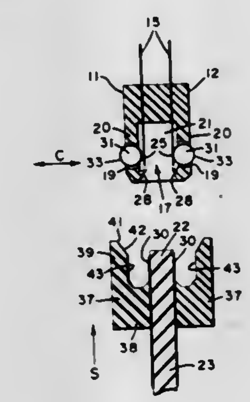

1. Mated connectors for providing a disconnectable electrical contact including
a socket comprising
a support element;
a conducting electrical contact element connected through the support element;
a limb attached to the support element running about parallel to the conducting electrical contact element and having a diameter in a direction about vertical to the surface of the conducting electrical contact element and forming together with the conducting electrical contact element a width in a direction about vertical to the surface of the conducting electrical contact element;
an elastic element captively disposed in a hole in the limb and located closely adjacent to the conducting electrical contact element and protruding on the side of the limb opposite to the location of the conducting electrical contact element and being of larger extension in the direction of the diameter of the limb than the diameter of the limb; and
a plug comprising
a shell;
a conductor disposed on the shell for engaging the conducting electrical contact element;
a clamping arm extending for roughly the same length as the conductor and running about parallel to the conductor at a clearance distance of approximately slightly more than the width of the limb and the conducting electrical contact element and having a bevelled edge near at the tip of the arm disposed toward the conductor and providing at the tip a clearance between conductor and clamping arm of larger than the total width of the elastic element and the conducting electrical contact element.

4,373,765
PLUG CONNECTION FOR RIBBON CABLES
Friedhelm A. Ritter, Gilching, Fed. Rep. of Germany, assignor to Raychem GmbH, Fed. Rep. of Germany
Continuation of Ser. No. 56,227, Jul. 10, 1979, abandoned. This application May 27, 1981, Ser. No. 268,072
Claims priority, application Fed. Rep. of Germany, Jul. 14, 1978, 7821233[U]
Int. Cl.³ H01R *23/66*
U.S. Cl. 339—75 MP **14 Claims**

1. A connection between a relatively flexible ribbon cable and a relatively rigid socket member, wherein said cable comprises a plurality of conductors extending substantially parallel to one another embedded in insulating material, said conductors being exposed along a portion of the cable to provide contact pins and at least two through-holes or at least one depression in each major surface of the cable, said through-holes or depressions being laterally spaced in said insulating material adjacent said contact pins, said cable thereby forming a plug member, and wherein said socket member comprises two integrally-formed guide portions substantially fixed relative to each other and defining therebetween a channel, electrical contact members disposed in said channel, and at least one relatively rigid projection extending from each guide portion

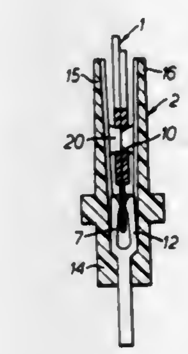

into said channel, with said projections being spaced apart laterally along the length of the channel, aid plug member being receivable in said channel with said contact pins engaging said contact members and being removably anchorable in said channel by engagement from opposite sides between said projections and said through-holes or depressions with each of said through-holes or depressions being engaged by a single projection.

4,373,766
ELECTRICAL CONNECTOR ASSEMBLY
James J. Johnston, Old Saybrook, Conn., assignor to Connector Technology Corporation, Old Saybrook, Conn.
Filed Apr. 29, 1980, Ser. No. 144,830
Int. Cl.³ H01R *13/54*
U.S. Cl. 339—91 R **24 Claims**

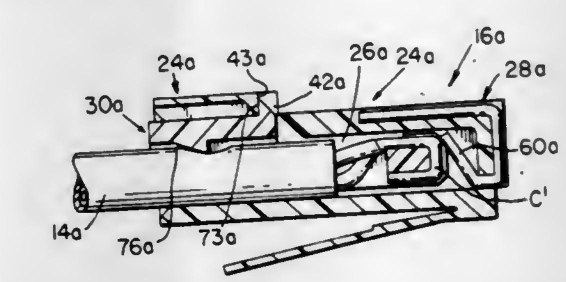

1. A connector assembly for terminating an insulated electrical cable including a plurality of electrical conductors having pre-stripped bare end portions without additional structure attached thereto, said connector assembly including a dielectric housing having an axially forwardly extending insert receiving cavity opening through its rear end, a plurality of electrical terminals mounted in said housing, each of said terminals including a portion exposed externally of said housing and a resilient contact portion disposed within said cavity, said contact portion having a normal position within said housing, and insert means at least partially disposed within said cavity for pressing and holding a bare end portion of each one of said conductors without any additional structure attached thereto in direct electrical contacting engagement with a respectively associated one of said resilient contact portions to displace said one resilient contact portion from its normal position to another position within said housing and for cooperating with said housing to maintain an associated portion of the cable spaced from the bare end portions thereof in fixed relation to the connector assembly, said one resilient contact in its other position exerting biasing force directly upon said bare end portion of said one conductor to maintain electrically conducting relation between said one resilient contact and said bare

end portion in the absence of any additional terminating structure associated with said bare end portion of said one conductor.

4,373,767
UNDERWATER COAXIAL CONNECTOR
James L. Cairns, 2348 Kentucky Ave., Mims, Fla. 32754
Filed Sep. 22, 1980, Ser. No. 189,950
Int. Cl.[3] H01R *13/52*
U.S. Cl. 339—94 C 18 Claims

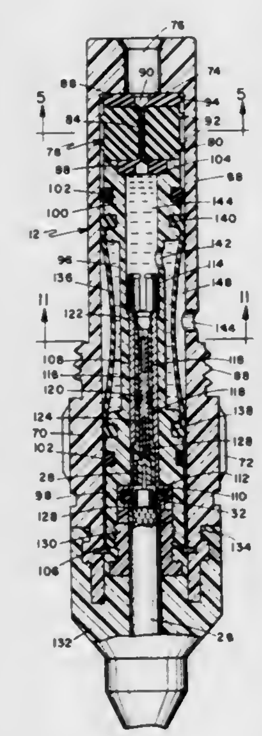

1. An underwater coaxial connector, comprising:
a male unit having a hollow cylindrical body with an open end;
a conductive contact probe mounted axially in said body with an entry tip adjacent the open end;
a female unit having a body portion to fit into said hollow body;
a seal mounted in said body portion and having an entry opening to receive the contact probe, said seal including an axially extending, elastomeric cylindrical sealing sleeve which is normally a close sliding fit for the contact probe, and a compressible constrictor surrounding the sealing sleeve and holding the sleeve in a flattened, sealed condition;
a conductive socket member mounted in said body coaxial with the sealing sleeve for engagement by said contact probe;
and securing means for securing the male and female units together.

4,373,768
THERMOSTATIC FIBER OPTIC WAVEGUIDES
Raymond Clarke, Sunnyvale, Calif., assignor to Raychem Corporation, Menlo Park, Calif.
Filed Mar. 31, 1980, Ser. No. 136,076
Int. Cl.[3] G02B *5/172*
U.S. Cl. 350—96.34 59 Claims

54. A waveguide comprising a core, a first light transmissive cladding disposed on and around the exterior surface of the core, and a second cladding disposed on and around the exterior surface of the first cladding, the refractive index of the first cladding being less than the refractive index of the core at temperatures less than a first temperature, T_1, and being greater than or equal to the refractive index of the core at temperatures greater than T_1, the refractive index of the second cladding being less than the refractive index of the first cladding at temperatures less than a second temperature, T_2, and greater than or equal to the refractive index of the first cladding at temperatures greater than T_2, T_2 being greater than T_1, wherein at temperatures less than T_1 the waveguide is capable of transmitting light through the core, and at temperatures less than T_2 and greater than T_1, the waveguide is capable

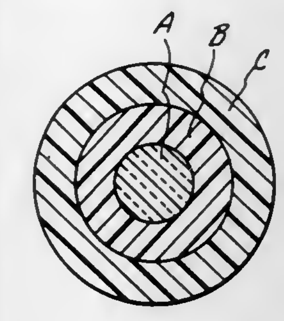

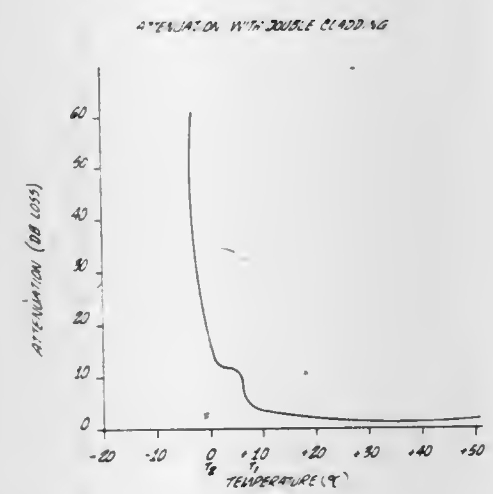

of transmitting light through the first cladding, and at temperatures greater than T_2, substantially no light is transmitted through the core and the first cladding.

4,373,769
ELECTRICAL CONNECTOR INCLUDING INSULATION-OPENING CONTACT
Istvan Mathe, and Alan H. Kasper, both of Cicero, Ill., assignors to Allied Corporation, Morris Township, Morris County, N.J.
Filed Aug. 20, 1975, Ser. No. 606,121
Int. Cl.[3] H01R *13/38*
U.S. Cl. 339—97 R 52 Claims

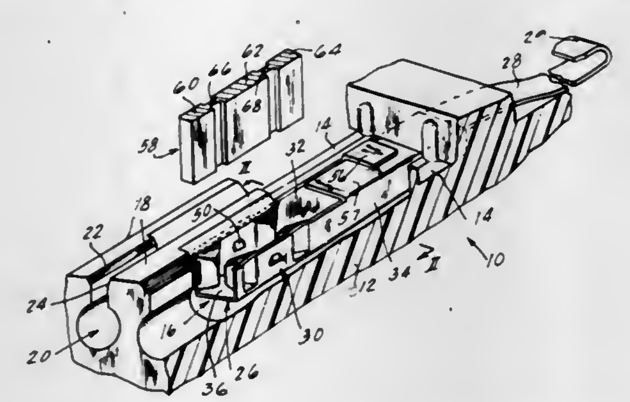

1. An insulation-piercing contact for electrical connection to an insulated conductor, comprising:
a sheet metal structure including first and second surfaces and forming an open channel for receiving an insulated conductor normal to its axis, said channel including a bottom wall and a pair of spaced sidewalls extending generally parallel to each other from said bottom wall; and
at least one pair of interior walls extending inwardly of said channel from respective ones of said sidewalls;
each of said interior walls comprising an oblique portion of one of said surfaces directed away from the respective sidewall and toward said bottom wall, a conductor wiping portion of said one surface extending generally in the direction of conductor insertion, an insulation opening portion of said one surface joining said oblique and wiping surface and defining a smoothly rounded blunt nose providing a direction change therebetween, and a smooth portion on said oblique surface immediately adjacent said insulation opening portion.

4,373,770
ELECTRICAL CONNECTOR WITH TACTILE LOCKING TELLTALE
Jacques Raux, Meudon la Foret, and Jacques Benoist, St. Cloud, both of France, assignors to Souriau & Cie, Boulogne-Billancourt, France
Filed Apr. 25, 1980, Ser. No. 143,597
Claims priority, application France, May 8, 1979, 79 11609
Int. Cl.[3] H01R *13/64*
U.S. Cl. 339—113 R 12 Claims

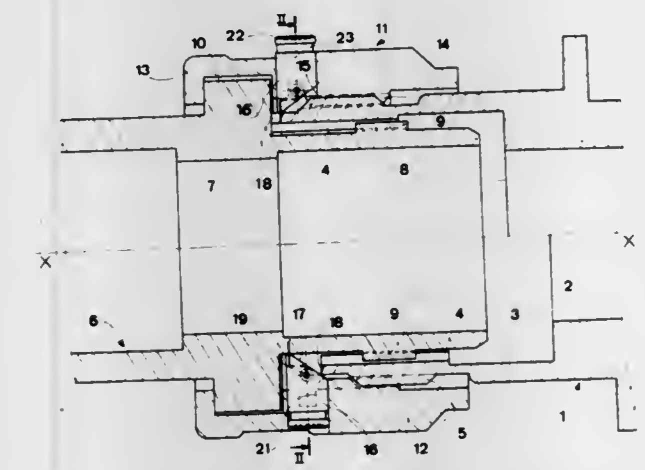

1. A connector having locking indication means for providing an indication within the reach of the fingers of the inspector or tools the inspector is handling when the inspector is unable visually to check the connector comprising a socket having at least one contact terminal and a leading part and a plug member having at least one contact terminal cooperating with said contact terminal on said socket and having a leading part engageable in the leading part of said socket by axial longitudinal movement of said plug therein;
securing means on the outside of said leading part of said socket;
a locking ring for securing in cooperating position said terminals on said plug and said socket;
said ring being retained on said plug and having a leading part thereof provided with complementary securing means on the inner surface thereof cooperating with said securing means on said socket to connect said plug and said socket and lock same;
a radial passage in said leading part of said ring;
tactile locking telltale means received in said passage having said locking indication means;
resilient means on said ring urging said telltale means inwardly of said ring and pressed in the opposite direction by said socket so that said locking indication means projects outwardly of said ring and said connector when said plug and said socket are properly coupled to afford the inspector the opportunity to check said locking indication means when said locking indication means is not visible to the inspector for visually checking said connector;
said telltale means consisting of a pin having an inner end, said end having a surface inclined along the longitudinal axis of said connector and bearing against the inner end of said socket;
said resilient means consisting of a return spring passing through said pin parallel to the inclined surface thereof;
said ring having an internal groove perpendicular to said longitudinal axis of said connector;
said spring being supported in said groove;
the middle of said spring on each side of said pin being retractable into said groove when said pin is urged by said socket outwardly of said ring.

4,373,771
LAMP SOCKET
William E. Cross, Brookfield, and Robert G. Plyler, Vienna, both of Ohio, assignors to General Motors Corporation, Detroit, Mich.
Filed Nov. 10, 1980, Ser. No. 205,718
Int. Cl.[3] H02B *1/02*
U.S. Cl. 339—125 L 1 Claim

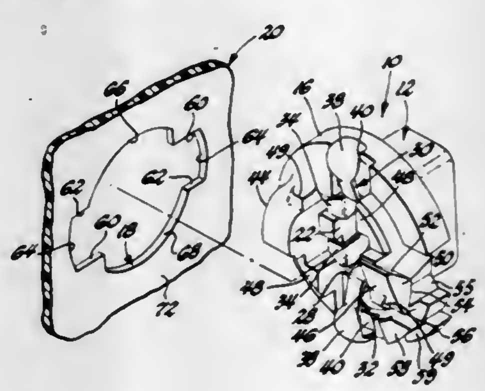

1. A lamp socket assembly adapted to be inserted into a socket opening formed in a mounting panel, said socket opening being generally circular in configuration and formed with a pair of diametrically opposed access slots; a lamp socket adapted to receive a light bulb and having a body portion integrally formed with a collar located in a plane which is perpendicular to the longitudinal center axis of said body portion, said collar having an outer diameter larger than the inner diameter of said socket opening; a pair of retainer members projecting outwardly from said collar and adapted to be inserted into said pair of access slots, each of said retainer members including a ramp portion; a curved cantilevered beam formed integrally with and extending directly from said collar and being located in said plane thereof, said cantilevered beam having a raised locking tab projecting outwardly from the free end of said cantilevered beam, said locking tab being located along an axis parallel to said longitudinal center axis of said body portion whereby insertion of said pair of retainer members into said pair of access slots followed by rotation of said lamp socket in one direction causes said ramp portion to engage a portion of said mounting panel for positioning said portion of said mounting panel between said ramp portion and said collar to thereby hold said lamp socket to said mounting panel from movement along said longitudinal center axis of said body portion while simultaneously causing said cantilevered beam to initially flex about an axis which is perpendicular to and extends towards said longitudinal center axis of said body portion and then move said locking tab into one of said access slots to limit rotational movement of said lamp socket relative to said mounting panel; and a tongue formed with said free end of said cantilevered beam for manually flexing said cantilevered beam about said perpendicular axis for removing said locking tab from said one of said access slots so that rotation of said lamp socket in a direction opposite to said one direction allows said lamp socket to be removed from said socket opening.

4,373,772

BAYONET-TYPE CIRCUIT BREAKER HAVING A MULTIPLE FINGER INTEGRATED CONTACT BAND

John H. Lorenzen, Pewaukee, and John V. Majewski, Hales Corners, both of Wis., assignors to RTE Corporation, Waukesha, Wis.

Filed Mar. 27, 1981, Ser. No. 248,564

Int. Cl.[3] H01R *13/68*

U.S. Cl. 339—130 R **19 Claims**

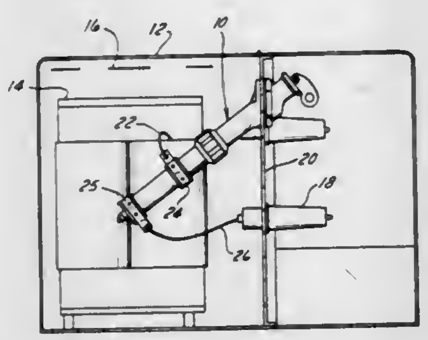

1. In a bayonet-type load break circuit breaker or oil fuse, including a support assembly adapted to be mounted in an opening in the tank for an oil-filled electrical apparatus and a bayonet assembly adapted to be removably insertable into said support assembly, the bayonet assembly including an insulating rod having a conductive bridging circuit member at the inner end of the insulating rod, the conductive member having a pair of contacts, the support assembly including a tubular portion submersible into the oil in the tank and having a number of contact openings to provide access to the contacts on the conductive member, the improvement comprising square contact bands, each formed of an elongate band of conductive metallic material, a number of fingers formed along each band and normally lying in each plane of the band, each of said fingers positioned on one side of said square, each of said fingers including a contact button at the free end, said bands being adapted to be mounted on the tubular portion of the support assembly with the buttons extending through the openings toward the axis of the tubular portion whereby said bayonet assembly will force the buttons outwardly against the bias of the fingers on insertion into the support assembly.

4,373,773

SOCKET TYPE CONTACT ASSEMBLY

R. Amelia Piscitelli; Valentine J. Hemmer, both of Sidney; Charles P. Fischer, and Eric F. Shepler, both of Bainbridge, all of N.Y., assignors to The Bendix Corporation, Southfield, Mich.

Filed Jan. 26, 1981, Ser. No. 228,495

Int. Cl.[3] H01R *4/10*

U.S. Cl. 339—262 R **2 Claims**

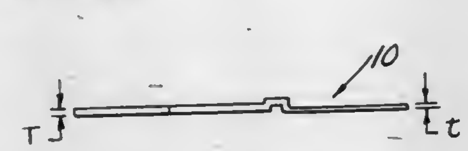

1. In combination with a three piece contact of the type having: a one piece inner sleeve stamped and formed from a single sheet of metal, said sleeve having a forward mating portion that includes a plurality of deflectable fingers, a rear wire receiving portion and a middle portion; a rear sleeve telescopically mounted to the rear portion of the inner sleeve; and a forward sleeve telescopically mounted to the forward portion of said inner sleeve, the improvement wherein the inner sleeve includes:

a first uniform thickness extending the entire length of the rear wire receiving portion of said inner sleeve and a second uniform thickness greater than the first thickness, said second thickness extending the entire length of the mating portion of said inner sleeve, whereby the forward mating portion of said inner sleeve is strengthened.

4,373,774

ILLUMINATOR FOR SUPPLYING A DIVERGENT ILLUMINATING BEAM FROM A PREDETERMINED AREA OF A PLANE

Georges Dubroeucq; Michel Lacombat, and Michele Brevignon, all of Paris, France, assignors to Thomson-CSF, Paris, France

Filed Apr. 21, 1980, Ser. No. 142,473

Claims priority, application France, Apr. 23, 1979, 79 10209

Int. Cl.[3] G02B *27/17, 27/48*

U.S. Cl. 350—6.6 **3 Claims**

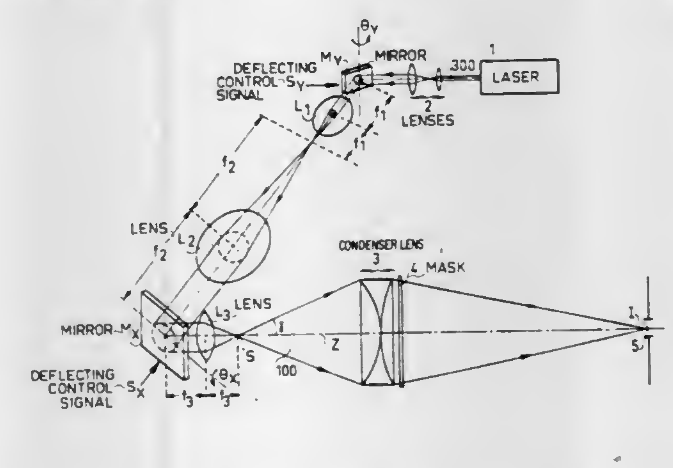

1. A device for synthesizing a light source in a predetermined plane, said light source having a regulatable energy distribution and form and acting as an illuminator, said source supplying a divergent illuminating beam from said plane having a predetermined coherence level, comprising:

a coherent radiation source producing a coherent beam;

optical means for controlling the movement of said beam, including electrically controlled optical scanning means for moving the beam in a selected circular pattern so as to change the coherence level and the amount of coherent noise in said beam; and

wherein said optical means includes two optical scanning mirrors whose pivoting axes have different directions, two lenses positioned between said two optical scanning mirrors, having a common optical axis and a common focus, and a third lens for focusing the beam from said second mirror to a point source which moves according to the movement of said two scanning mirrors said point source having a variable shape and a predetermined distribution of energy levels.

4,373,775

FIBER DICHROIC COUPLER

George A. Gasparian, Roanoke, Va., assignor to International Telephone and Telegraph Corporation, New York, N.Y.

Filed Jun. 23, 1980, Ser. No. 159,972

Int. Cl.[3] G02B *5/172*

U.S. Cl. 350—96.15 **21 Claims**

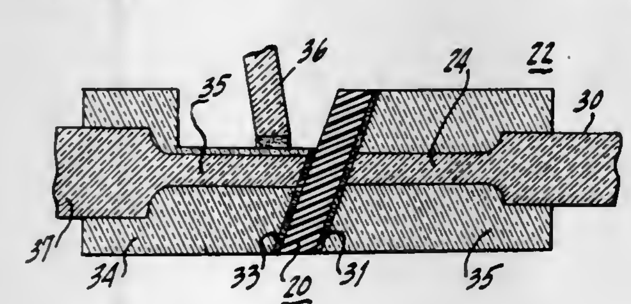

17. An assembly for bidirectional optical signal transmission over a single optical fiber comprising:

a thin film dichroic element of a thickness of less than thirty micrometers, an optical fiber attached to said element by a thin layer of adhesive.

4,373,776

PROTECTION CASE FOR OPTICAL FIBER SPLICES

Michael L. Purdy, Stittsville, Canada, assignor to Northern Telecom Limited, Montreal, Canada

Filed Jun. 30, 1980, Ser. No. 164,091

Int. Cl.[3] G02B *7/26*

U.S. Cl. 350—96.20 **11 Claims**

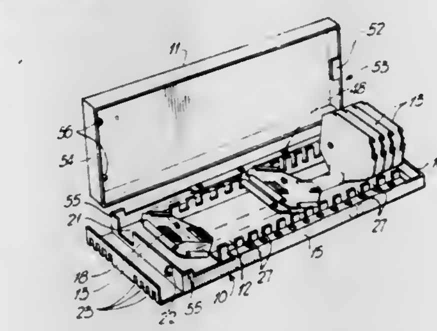

1. A protection case for optical fiber splices, comprising:

an elongate box having a base member and a cover removably attached to the base member;

at least one insert in said base member defining a duct extending along each side of said base member;

a plurality of packet members pivotally attached to the base member, the packet members positioned between the ducts, each packet member including a hinge attached to the base member, the hinges attached at spaced apart positions along a longitudinal axis of the base, the packet members in an overlapping relationship when pivotted down in the base member and pivotal to at least a vertical position, extending up from said base member;

each of said ducts having a side adjacent to said packet members and a plurality of slots in each of said sides, a slot in each side aligned approximately with each hinge, for passage of fibers along each duct and entering to and exiting from said packet members through said slots.

4,373,777

CONNECTOR AND CABLE ASSEMBLY

Leslie M. Borsuk, Los Alamitos, and Patrick G. Corrales, Garden Grove, both of Calif., assignors to International Telephone and Telegraph Corporation, New York, N.Y.

Filed Aug. 11, 1980, Ser. No. 177,192

Int. Cl.[3] G02B *7/26*

U.S. Cl. 350—96.20 **15 Claims**

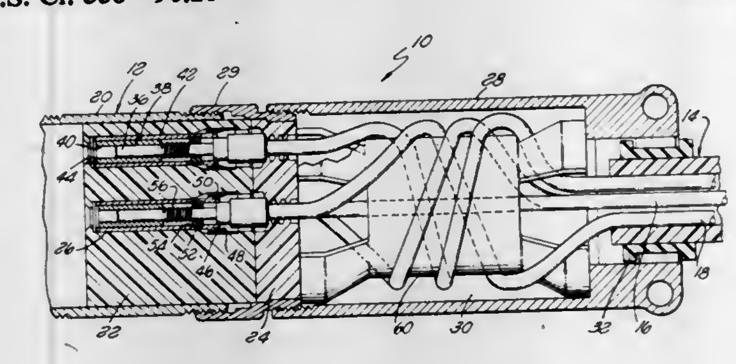

1. A connector and cable assembly comprising:

a combined fiber optic and electrical connector member and a cable containing at least one optical fiber and at least one metallic conductor;

said connector member comprising a support member and a hollow sleeve behind said support member;

said support member containing a plurality of axially extending passages therethrough;

said cable being connected to the rear of said connector member with said metallic conductor extending through said sleeve and terminated to a contact in one of said passages; and

said optical fiber being spirally wound around said sleeve and terminated to a ferrule slidably mounted in another of said passages, said ferrule being adapted for rearward movement in said other passage, the spiral portion of said fiber being free to flex upon rearward movement of said ferrule in said support member.

4,373,778

CONNECTOR IMPLEMENTED WITH FIBER OPTIC MEANS AND SITE THEREIN FOR INTEGRATED CIRCUIT CHIPS

Jawad F. Adham, Vestal, N.Y., assignor to International Business Machines Corporation, Armonk, N.Y.

Filed Dec. 30, 1980, Ser. No. 221,678

Int. Cl.[3] G02B *7/26*

U.S. Cl. 350—96.20 **22 Claims**

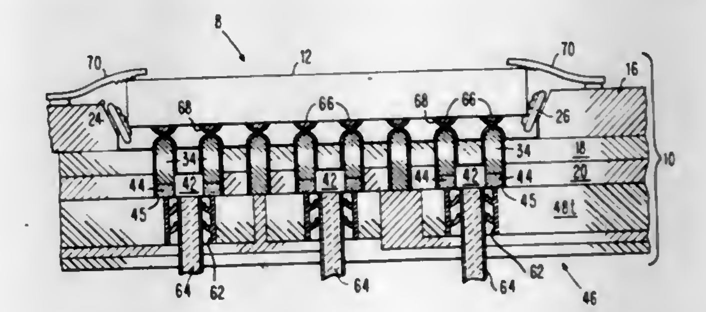

1. Apparatus for detachably connecting a high density, integrated circuit chip having deformable chip connection pads thereon within said apparatus and for coupling said chip pads to predefined connection points, said apparatus comprising:

(a) a top portion including a distinct conductive layer at the top thereof, said conductive layer having an opening formed therein which extends partially through said conductive layer;

(b) a floor at the bottom of said top portion opening having a first plurality of holes formed therein which extend from said floor completely through the remainder of said top portion and a second plurality of holes also formed in the remainder of said top portion between predetermined ones of said first plurality of holes and extending from the bottom of and partially upward into said top portion;

(c) a plurality of conductive site connection pins mounted one each in said first plurality of holes, said pins including connection pads at the head thereof, said pads extending upwardly from said floor toward said opening;

(d) a bottom portion including an upper insulating layer and at least one conductive layer therebeneath which includes printed circuit leads formed therein, said insulating layer having a third plurality of holes formed therethrough and said bottom portion conductive layer having a fourth plurality of holes formed therein coaxial with each one of said third plurality of holes;

(e) a plurality of light transmission means mounted one each in said fourth plurality of holes and extending therefrom to said connection points;

(f) a plurality of optical transducers, mounted one each in operative association with one of said site connection pins and one of said light transmission means in predetermined ones of said third plurality of holes, for converting electrical signals received from its said associated site connection pin into light signals suitable for transmission along its associated light transmission means to at least one of said remote connection points;

(g) a plurality of optical transducers, mounted one each in operative association with one of said site connection pads and one of said light transmission means in predetermined ones of said third plurality of holes, for converting light

signals received from its said associated light transmission means and at least one of said remote connection points into electrical signals suitable for use in the chip by applying said electrical signals to its associated site connection pin; and

(h) chip retention means, secured to said apparatus at the top of said opening, for retaining a chip in said opening with said site connection pads and said chip connection pads operatively coupled to each other.

4,373,779

SINGLE CHANNEL OPTICAL SLIP RING

Glenn F. Dorsey, Blacksburg, Va., assignor to Litton Systems, Inc., Blacksburg, Va.

Filed Nov. 7, 1980, Ser. No. 204,763

Int. Cl.[3] G02B *5/14*

U.S. Cl. 350—96.21 **2 Claims**

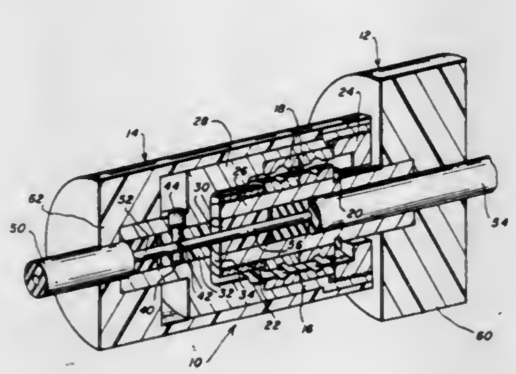

1. A single channel optical slip ring assembly comprising:
a hollow rotor shaft selectively dimensioned for receiving a fiber optic cable,
a rotor bushing mounted in said rotor shaft and having an axial bore for receiving an optic fiber of a fiber optic cable,
a stator cylindrical member selectively dimensioned for receiving a fiber optic cable, and having on one end an axially extending collar,
a stator bushing mounted within said stator proximate said collar having an axial bore for receiving an optic fiber in each end thereof,
means for rotatably mounting said bushing end of said rotor shaft within said collar of said stator cylindrical member so that said rotor bushing bore and said stator bushing bore are aligned along the axis of rotation and said bushings are separated by a selected gap,
a gauging bore in the stator bushing which orthogonally intersects its axial bore,
means in said stator cylindrical member for permitting access to said gauging bore,
a stator fiber optic cable in said stator cylindrical member having an exposed length of optic fiber extending into said stator bushing bore to a selected gauged location within said gauging bore, and
a rotor fiber optic cable in said rotor shaft having an exposed length of optic fiber passing through said rotor bushing bore, across said gap, and into said stator bushing bore to a selected gauged location spaced from said stator optic fiber within said gauging bore, whereby the rotor optic fiber rotates within said stator bushing and the fiber ends are maintained spaced from one another and in axial alignment thereby.

4,373,780

IMAGE TRANSMITTING SYSTEM UTILIZING A GRADIENT INDEX LENS

William L. Lama, Webster, N.Y., assignor to Xerox Corporation, Stamford, Conn.

Filed Jun. 16, 1980, Ser. No. 159,993

Int. Cl.[3] G02B *5/17*

U.S. Cl. 350—96.25 **2 Claims**

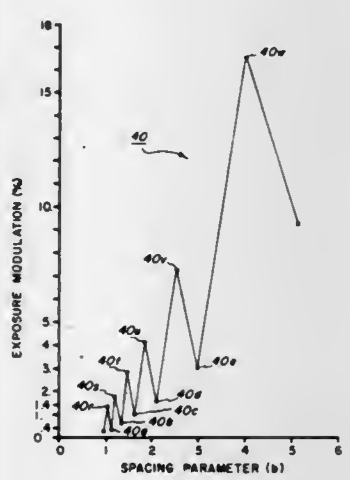

1. An optical imaging system including a plurality of gradient index fibers combined into at least a single row to form a lens array, said array positioned between an object and image plane so as to transmit light reflected from an object onto said image plane thereby exposing at least a portion of said image plane, said array characterized by producing said exposure with a minimum amount of spatial modulation by optimum selection of a fiber spacing factor b defined by the term

$$b = \frac{-\sec(\sqrt{A}\ L/2)}{\sqrt{S(S+1)}}\ (M)$$

wherein
A = gradient index constant of the fiber
L = fiber length
M = 1,2 = number of rows of fibers
S = 1, 2, 3 . . .

4,373,781

ACOUSTIC TO OPTICAL PULSE CODE MODULATING TRANSDUCER

John Schlafer, Wayland, Mass., assignor to GTE Laboratories Incorporated, Waltham, Mass.

Filed Feb. 12, 1979, Ser. No. 11,290

Int. Cl.[3] G02B *5/172*

U.S. Cl. 350—96.29 **7 Claims**

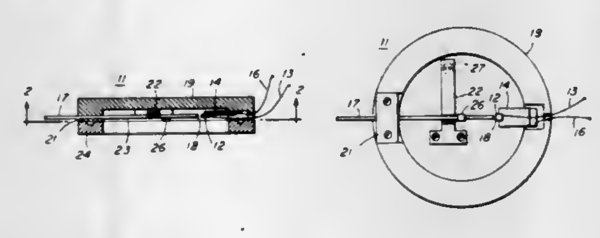

1. An acoustic to optical pulse code modulating transducer comprising:
an optical fiber having a first end and a second end and a central axis;
a diode light source;
a microphone housing;
means coupled to said housing for supporting said fiber at a position displaced from said first end, said first end being oriented within said housing;

means for electrically powering said light source;
electromechanical transducing means coupled to said housing for supporting said light source,
said light source and said optical fiber being so aligned that, when said electromechanical transducing means is unexcited, light from said source is directed through said first end to said optical fiber;
an acoustic diaphragm affixed to said housing;
means coupling said diaphragm to said fiber at a point between said position and said first end for transmitting acoustic frequencies thereto; and
means for exciting said electromechanical transducing means so that said light source is vibrated along a path perpendicular to said axis.

4,373,782

NON-POLARIZING THIN FILM EDGE FILTER

Alfred J. Thelen, Santa Rosa, Calif., assignor to Optical Coating Laboratory, Inc., Santa Rosa, Calif.

Filed Jun. 3, 1980, Ser. No. 156,260

Int. Cl.[3] G02B *5/28, 27/10*

U.S. Cl. 350—166 **12 Claims**

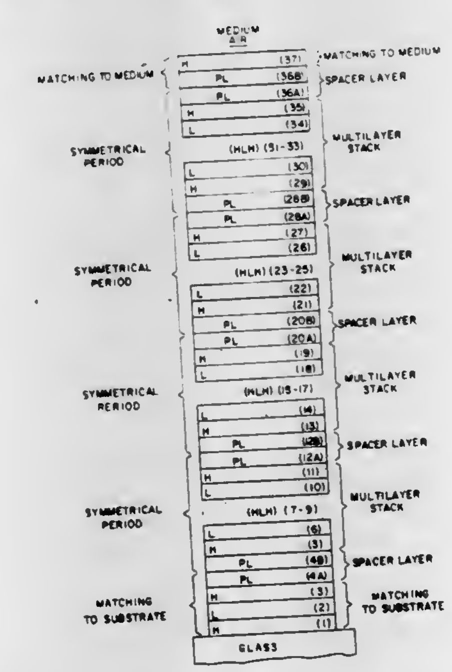

1. A thin film optical filter having a bandpass reflectance characteristic with one of the transition wavelength edges thereof being non-polarizing for radiation incident at a preselected non-normal angle, said filter comprising: a transparent substrate having a surface; and a multilayer thin film optical coating provided on said surface, said optical coating including a preselected number of alternate layers of a first higher refractive index dielectric material and a second lower refractive index dielectric material arranged as a sequence of dielectric multilayer stacks with intervening spacer layers formed of one of said dielectric materials, said layers of first and second material in said multilayer stacks having optical thicknesses preselected to produce, for radiation incident at said preselected angle, a spectral response characteristic which has separate bandpass regions with separated low and high wavelength transition edges for the two principal polarization planes if said spacer layers were to have tuned optical thickness, said spacer layers having detuned optical thickness prearranged in accordance with said preselected angle to shift either said low wavelength transition edges or said high wavelength transition edges substantially into alignment.

4,373,783

THERMALLY STABILIZED HELIOSTAT

Alfred J. Anderson, Littleton, Colo., assignor to Atlantic Richfield Company, Los Angeles, Calif.

Filed Apr. 7, 1980, Ser. No. 138,207

Int. Cl.[3] G02B *5/08*

U.S. Cl. 350—310 **9 Claims**

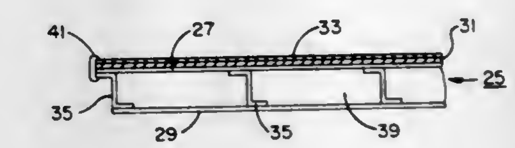

1. In a heliostat for reflecting solar energy onto a collector including:
a. a main support structure;
b. means for pivoting and tilting said heliostat so as to keep said solar energy focused on said collector, and
c. a plurality of mirror modules for reflecting said solar energy;
the improvement comprising having each said mirror module thermally stabilized against curvature induced by temperature changes and comprising:
d. internal support structure having sufficient rigidity to support said mirror cantilevered from said main support structure and to withstand predetermined loads;
e. front and back sheets attached to said internal support structure; said front and back sheets having the same coefficient of thermal expansion such that no curvature is induced by temperature changes; said front and back sheets having adequate structural strength to stabilize said internal support structure; and
f. a layer of adhesive grease adhering said mirror to said front sheet; said adhesive grease being water repellant and having adequate set strength to support said mirror and having sufficient shear tolerance to permit differential expansion of said mirror and said front sheet when the temperature changes without inducing stresses or curvature effects; said adhesive grease being adapted to prevent fluttering of said mirror with respect to said front sheet and to protect the mirror backside against the adverse effects of weather.

4,373,784

ELECTRODE STRUCTURE ON A MATRIX TYPE LIQUID CRYSTAL PANEL

Keisaku Nonomura, Nara; Toshiaki Takamatsu, Tenri; Hisashi Uede, Yamatokoriyama, and Tomio Wada, Nara, all of Japan, assignors to Sharp Kabushiki Kaisha, Osaka, Japan

Filed Apr. 24, 1980, Ser. No. 143,097

Claims priority, application Japan, Apr. 27, 1979, 54-57206[U]

Int. Cl.[3] G02F *1/133*

U.S. Cl. 350—336 **5 Claims**

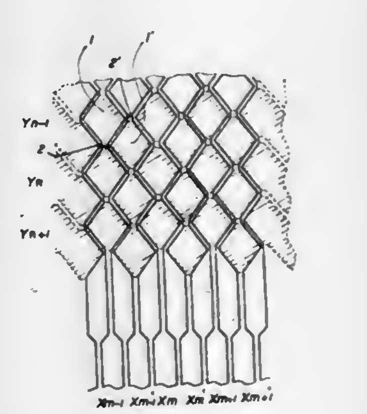

1. A matrix type liquid crystal display device comprising:

a plurality of column electrodes;
a plurality of row electrodes corresponding to and generally orthagonal to said column electrodes whereby, corresponding row and column electrodes form diamond-shape picture elements;
each of said diamond-shaped picture elements having a first pair of opposed apices arranged along a line generally extending in the direction of said column electrodes and a second pair of opposed apices arranged along a line generally extending in the direction of said row electrodes;
said first pair of opposed apices of adjacent picture elements being connected to form said column electrodes; and
a layer of liquid crystal material disposed between said column and row electrodes.

4,373,785
MICROSCOPE OBJECTIVE
Arthur H. Shoemaker, Orchard Park, N.Y., assignor to Warner Lambert Technologies, Inc., Southbridge, Mass.
Filed Apr. 22, 1981, Ser. No. 256,325
Int. Cl.[3] G02B *21/02*
U.S. Cl. 350—414 **2 Claims**

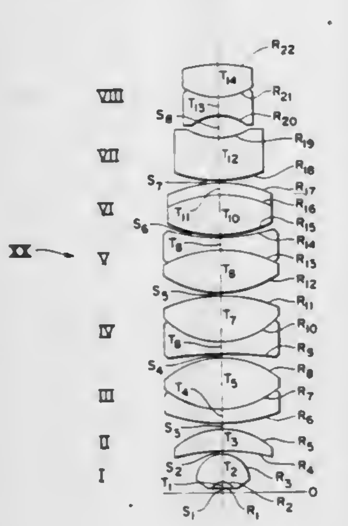

1. An eight component, oil immersion apochromatic objective having an N.A. of 1.30 which has a plano-convex doublet I, a concavo-convex singlet II, a biconvex doublet III, a concavo-convex doublet IV, a convex-concavo doublet V, a biconvex doublet VI, a convex-concavo singlet VII and a concavo-convex doublet VIII having the parameters of the respective axial spacings (S_0-S_8) in mm, radii (R_1-R_{22}), in mm with a minus sign (−) indicating a center of curvature on the object side of the lens, thickness (T_1-T_{14}) in mm, indices of refraction (ND_1-ND_{14}) and Abbe numbers (ν_1-ν_{14}) are absolute values, all being determined by the following table:

Lens	Radius (R)	Thickness (T)	Spacing (S)	Refractive Index (ND)	Abbe No (ν)
			$S_1=0.154F$		
	$R_1=\infty$				
		$T_1=0.313F$		$1.535<ND_1<1.545$	$50.5<\nu_1<51.5$
I	$R_2=-0.583F$				
		$T_2=1.568F$		$1.88<ND_2<1.89$	$41.5<\nu_2<42.5$
	$R_3=-1.356F$				
			$S_2=0.011F$		
	$R_4=-9.156F$				
II		$T_3=1.118F$		$1.78<ND_3<1.79$	$50<\nu_3<51$
	$R_5=-3.632F$				
			$S_3=0.291F$		
	$R_6=8.123F$				
		$T_4=0.658F$		$1.715<ND_4<1.725$	$34<\nu_4<35$
III	$R_7=4.399F$				
		$T_5=2.577F$		$1.43<ND_5<1.44$	$95<\nu_5<96$
	$R_8=-4.399F$				
			$S_4=0.252F$		
	$R_9=-21.809F$				

-continued

Lens	Radius (R)	Thickness (T)	Spacing (S)	Refractive Index (ND)	Abbe No (ν)
		$T_6=0.658F$		$1.65<ND_6<1.66$	$39<\nu_6<40$
IV	$R_{10}=3.907F$				
		$T_7=2.248F$		$1.43<ND_7<1.44$	$95<\nu_7<96$
	$R_{11}=7.204F$				
			$S_5=0.055F$		
	$R_{12}=5.212F$				
		$T_8=2.193F$		$1.43<ND_8<1.44$	$95<\nu_8<96$
V	$R_{13}=-5.869F$				
		$T_9=0.658F$		$1.715<ND_9<1.725$	$34<\nu_9<35$
	$R_{14}=10.204F$				
			$S_6=0.055F$		
	$R_{15}=6.014F$				
		$T_{10}=1.919F$		$1.43<ND_{10}<1.44$	$95<\nu_{10}<96$
VI	$R_{16}=-6.014F$				
		$T_{11}=0.658F$		$1.715<ND_{11}<1.725$	$34<\nu_{11}<35$
	$R_{17}=-6.014F$				
			$S_7=0.055F$		
	$R_{18}=6.272F$				
VII		$T_{12}=2.193F$		$1.62<ND_{12}<1.63$	$46.5<\nu_{12}<47.5$
	$R_{19}=3.098F$				
			$S_8=1.069F$		
	$R_{20}=-2.209F$				
		$T_{13}=0.987F$		$1.785<ND_{13}<1.795$	$47<\nu_{13}<48$
VIII	$R_{21}=3.410F$				
		$T_{14}=1.645F$		$1.78<ND_{14}<1.79$	$25.5<\nu_{14}<26.5$
	$R_{22}=-5.943F$				

wherein R is 1.80 to 1.85 mm.

4,373,786
PHOTOGRAPHIC OBJECTIVE OF REDUCED SIZE
Yasuyuki Yamada, Mitaka, Japan, assignor to Canon Kabushiki Kaisha, Tokyo, Japan
Filed Aug. 10, 1981, Ser. No. 291,630
Claims priority, application Japan, Aug. 19, 1980, 55-114199
Int. Cl.[3] G02B *3/04, 9/34*
U.S. Cl. 350—432 **1 Claim**

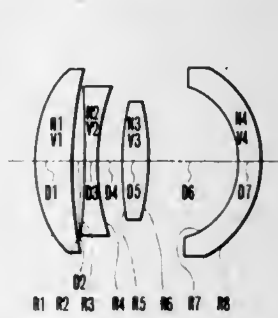

1. A photographic objective of reduced size including the following various conditions:
from front to rear;
a first lens in the form of a positive meniscus lens convex toward the front;
a second lens in the form of a negative lens;
a third lens in the form of a positive lens;
a fourth lens with the front surface concave toward the front, said concave surface being aspheric and said aspheric surface being figured by the following equation:

$$\Delta X = \frac{(1/R^*)Y^2}{1+\sqrt{1-(Y/R^*)^2}} + A_1Y^2 + A_2Y^4 + A_3Y^6 + \ldots + B_1Y^3 + B_2Y^5 + \ldots - \frac{(1/R)Y^2}{1+\sqrt{1-(Y/R)^2}}$$

where the axial direction is taken as the X-axis, the direction perpendicular to the optical axis as the Y-axis, the direction in which light advances as positive, and the intersection of the vertex and the X-axis at the original point, and the difference along the X-axis direction between the aspheric surface and the surface obtained by extrapolating the spherical surface contributing to the determination of the focal length is denoted by ΔX, the radius of curvature of the paraxial region by R, the radius of curvature of the standard spherical surface of the lens defined as $R^*=R/(1-2RA_1)$, the aspheric even coefficients by Ai and the aspheric odd coefficients by Bi;
and being characterized by the following numerical values for the radii of curvature of the lens surface Ri numbered the i-th from the front, the lens thicknesses and axial air separations Di, the refractive indices for spectral d lines of the glasses of the lens elements Ni, and Abbe numbers νi of the glasses of the lens elements as related to a focal length of the entire lens system f=100:

F = 100 F-number = 1:3.5 Image Angle 2ω = 63°

Radius of Curvature	Thickness & Separation	Refractive Index (Nd)	Abbe Number (νd)
R1 = 28.32	D1 = 8.59	N1 = 1.77250	ν1 = 49.6
R2 = 86.00	D2 = 2.66		
R3 = −159.52	D3 = 2.86	N2 = 1.80518	ν2 = 25.4
R4 = 43.65	D4 = 5.33		
R5 = 69.12	D5 = 5.44	N3 = 1.60342	ν3 = 38.0
R6 = −69.12	D6 = 20.51		
R7 = −16.56	D7 = 4.58	N4 = 1.49171	ν4 = 57.4
R8 = −22.20			

Aspherical Coefficients (the Aspheric surface at R7)

$A1 = -0.17023 \times 10^{-2}$	$B1 = -0.54318 \times 10^{-4}$
$A2 = 0.65538 \times 10^{-5}$	$B2 = 0.73458 \times 10^{-7}$
$A3 = -0.74579 \times 10^{-7}$	$B3 = 0.15509 \times 10^{-8}$
$A4 = 0.28740 \times 10^{-9}$	$B4 = -0.13024 \times 10^{-10}$
$A5 = 0.11786 \times 10^{-12}$	

4,373,787
ACCURATE THREE DIMENSIONAL EYE TRACKER
Hewitt D. Crane, 25 Cordova Ct., Portola Valley, Calif. 94025, and Carroll M. Steele, 1979 Scott La., Los Altos, Calif. 94022
Continuation of Ser. No. 16,250, Feb. 28, 1979, abandoned. This application Nov. 13, 1980, Ser. No. 206,489
Int. Cl.[3] A61B *3/14, 3/10*
U.S. Cl. 351—210 **4 Claims**

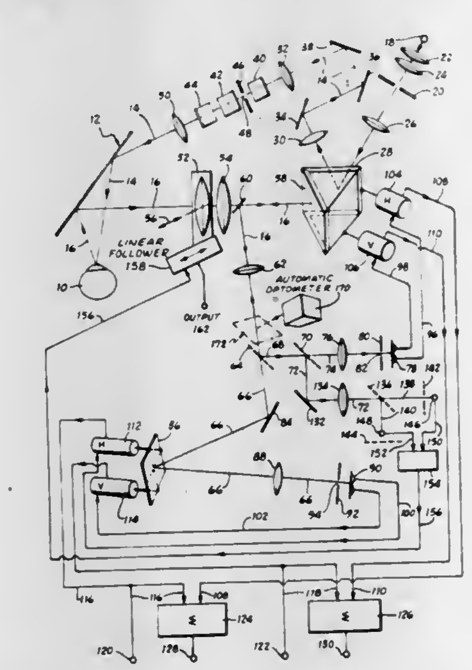

1. A three dimensional eye tracker for measuring, as a function of time, the point in three dimensional space on which the eye is fixed, including
a two dimensional double Purkinje image eye tracker portion for measuring movement of the eye in rotation and translation, said eye tracker incorporating means for forming and directing a beam containing images of first and fourth Purkinje images, measuring means responsive to said first and fourth Purkinje images to generate output signals indicative of eye rotation and translation, optical focusing and positioning means positioned in the path of said images and responsive to said output signals to maintain the position of the first Purkinje image relative to the said eye and focus images from the eye, and
an automatic optometer portion for measuring the refractive power of the eye, having beam generating means for forming an image at the eye and refractive power measuring means responsive to an image containing beam from the eye, at least a portion of said optometer beam path traversing a path including at least a portion of the said optical focusing and positioning means, whereby images formed by the said optometer portion are maintained in focus and stabilized in position.

4,373,788
UNDERWATER VISION DEVICE
M. Linton Herbert, 14255 Rosemary La., Apt. 8104, Largo, Fla. 33540
Continuation-in-part of Ser. No. 96,898, Nov. 23, 1979, Pat. No. 4,256,386. This application Jan. 19, 1981, Ser. No. 226,495
The portion of the term of this patent subsequent to Mar. 17, 1998, has been disclaimed.
Int. Cl.[3] G02C *1/00*
U.S. Cl. 351—43 **20 Claims**

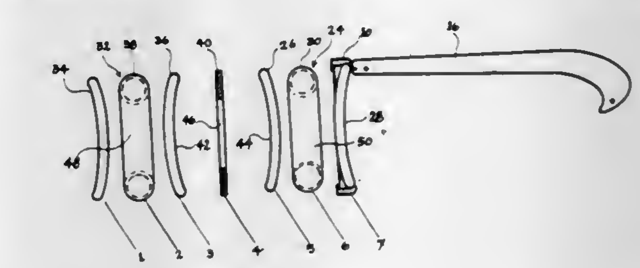

1. An underwater vision device supported by the nose and ears of a wearer comprising:
a. a frame including
(i) a front element having a nose piece for contacting and being supported by the wearer's nose, said front element having first and second apertures aligned with the wearer's eyes;
(ii) a first ear piece coupled to one end of said front element and a second ear piece coupled to one end of said front element, said first and second ear pieces contacting the wearer's ears to maintain said frame in a desired fixed position on the wearer's head;
b. first and second lens elements coupled to said front element in alignment with the first and second apertures, each of said lens elements including
(i) a first lens group having one end coupled to said front element in alignment with one of the apertures therein, said first lens group including
A. a first solid transparent substantially circular lens having a first lens area;
B. a second solid transparent substantially circular lens having a second lens area larger than said first lens area;
C. securing means coupled to said first and second lenses for securing said first and second lenses together and for forming a sealed air chamber between said first and second lenses;
(ii) a second lens group coupled to said first lens group and including
A. a first solid transparent substantially circular lens

having a third lens area larger than the second lens area

B. a second solid transparent substantially circular lens having a fourth lens area larger than said third lens area

C. securing means coupled to said first and second lenses for securing said first and second lenses together and for forming a sealed air chamber between said first and second lenses; and

(iii) spacer means coupled to said first and second lens group for maintaining a predetermined spacing between said first and second lens groups, for maintaining said second lens group in alignment with said first lens group, and for forming a cavity between said first and second lens groups which fills with water when said device is immersed in water.

4,373,789

OPTICAL APPARATUS FOR APPLYING MAKE-UP

Lorraine J. Roberts, 301 Diplomat Plz., Morton, Tazewell County, Ill. 61550

Continuation of Ser. No. 42,006, May 24, 1979, abandoned. This application Mar. 18, 1981, Ser. No. 245,022

Int. Cl.[3] G02C *1/00, 7/08, 9/02*

U.S. Cl. 351—158 **1 Claim**

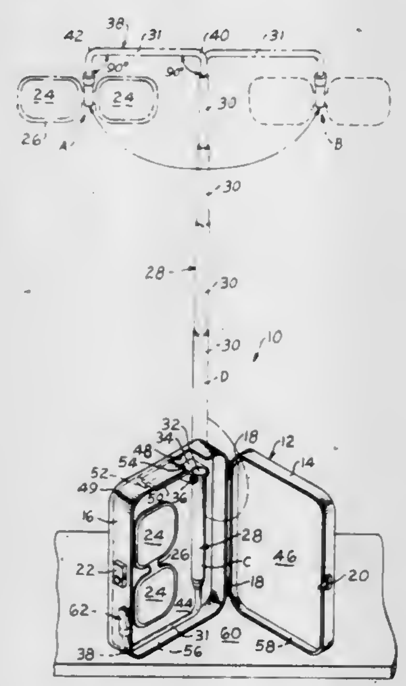

1. An optical apparatus for applying make-up comprising,

a housing having a first closure member and a second closure member and a slot formed in the housing, said members being hinged together and adapted to be opened;

a pair of prescription lenses removably mounted in the housing;

means for opening and closing the slot, said means being a cover mounted on the housing adjacent the slot;

an extendable member pivotable at a first end from a first position in the housing adjacent the slot to a second position extending from the housing through the slot; and

means for holding the lenses, said means being attached to a second end of said extendable member,

wherein said housing in its open position will stand on its ends when said extendable member is positioned through said slot.

4,373,790

CAMERA HAVING A FLASHLIGHT PHOTOGRAPHY RECOMMENDATION DEVICE

Yoshiaki Ohtsubo, Kawasaki, Japan, assignor to Nippon Kogaku K.K., Tokyo, Japan

Filed Jul. 7, 1981, Ser. No. 281,180

Claims priority, application Japan, Jul. 30, 1980, 55-103692

Int. Cl.[3] G03B *7/00, 15/02*

U.S. Cl. 354—24 **5 Claims**

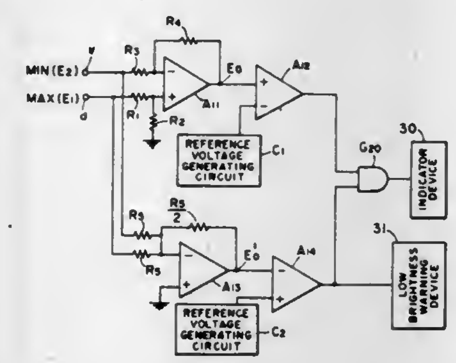

1. In a camera wherein an object field is divided into a plurality of areas and the brightness of the object field in each of said areas is measured to thereby obtain a plurality of measurement values, a device for recommending auxiliary illumination of the object field, said device including:

(a) means (4) for detecting a maximum value and a minimum value from among said plurality of measurement values;

(b) first judgment means for comparing said maximum value and said minimum value and putting out a first judgment signal when the difference between said maximum value and said minimum value exceeds a predetermined value;

(c) second judgment means for calculating the mean value of said plurality of measurement values and putting out a second judgment signal when said mean value exceeds a reference value; and

(d) means responsive to said first judgment signal and said second judgment signal to indicate the recommendation of said auxiliary illumination.

4,373,791

FOCUSING POSITION DETECTION APPARATUS

Kunihiko Araki, Tokyo, Japan, assignor to Ricoh Company, Ltd., Tokyo, Japan

Filed Feb. 20, 1980, Ser. No. 122,999

Claims priority, application Japan, Feb. 20, 1979, 54-18919; Feb. 28, 1979, 54-22688

Int. Cl.[3] G03B *7/099;* **G01J** *1/20*

U.S. Cl. 354—25 **10 Claims**

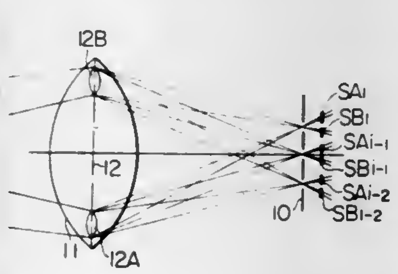

3. A focusing position detection apparatus comprising an optical means for dividing rays of image formation light emitted from the exit pupil of a taking lens, photosensor means comprising at least one pair of photosensor elements for receiving said divided rays of image formation light and performing photoelectric conversion of said received rays of image formation light separately from each of said pair of photosensor elements and producing output signals corresponding to the photoelectrically converted rays of image formation light, focusing position detection means for detecting the phase difference of said output signals produced from said photosensor means and for detecting an in-focus position, and detecting accuracy changing means for automatically changing the accuracy of the in-focus position.

4,373,792

FLASHLIGHT PHOTOGRAPHING DEVICE

Hideyo Nozawa, Ohmiya; Hideshi Naito, and Kazuyuki Kazami, both of Tokyo, all of Japan, assignors to Nippon Kogaku K.K., Tokyo, Japan

Filed Apr. 21, 1981, Ser. No. 256,195

Claims priority, application Japan, Apr. 25, 1980, 55-55086; Apr. 25, 1980, 55-55087; Apr. 25, 1980, 55-55088

Int. Cl.[3] G03B *7/08, 7/16*

U.S. Cl. 354—33 **9 Claims**

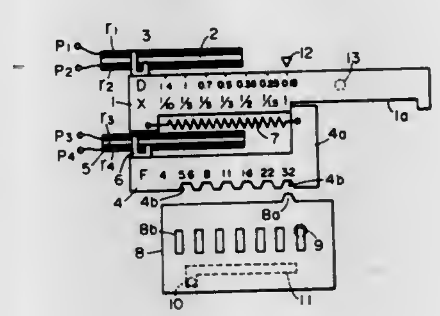

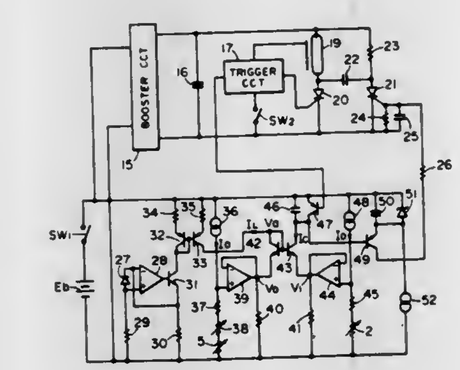

1. In a flashlight photographing device including a phototaking lens barrel capable of operatively associating an aperture setting member and a distance adjust member with each other so that the product of an aperture value set by said aperture setting member and an object distance given by said distance adjust member maintains a predetermined value related to the quantity of emitted light of a flash device, the improvement residing in that said phototaking lens barrel includes means for releasing the operative association between said aperture setting member and said distance adjust member; and means for regulating the action of said releasing means to enable independent operations of said aperture setting member and said distance adjust member only within a range in which the product of said aperture value and said object distance does not exceed said predetermined value.

4,373,793

LIGHT MEASURING DEVICE FOR FLASH PHOTOGRAPHY

Nobuyuki Taniguchi, Sakai, and Yoshio Yuasa, Kawachinagano, both of Japan, assignors to Minolta Camera Co., Ltd., Sakai, Japan

Filed Aug. 3, 1981, Ser. No. 289,384

Claims priority, application Japan, Aug. 4, 1980, 55-107607; Aug. 5, 1980, 55-107508; Jul. 21, 1981, 56-114687

Int. Cl.[3] G03B *15/05;* **G01J** *1/46;* **H05B** *41/38*

U.S. Cl. 354—31 **35 Claims**

28. Light measuring device for use in flash photography, which measures a preliminary flash light to obtain camera exposure information for photography under a primary flash light, comprising:

at least a pair of means for receiving light coming from a pair of areas of the object field, respectively;

means for producing outputs in response to said light receiving means, respectively;

means for respectively integrating the individual outputs of said producing means during a predetermined period of time including at least the duration time of the preliminary flashing to obtain a first group of signals, respectively;

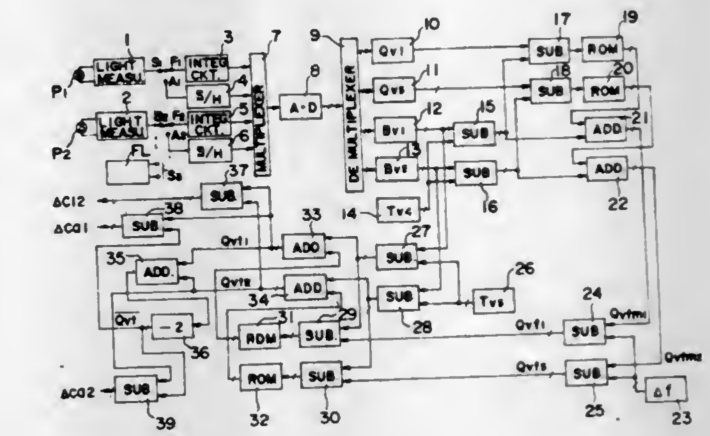

means for obtaining a second group of signals respectively including light intensity information of said pair of areas without the influence of the preliminary flash light, by utilizing the individual outputs of said producing means, respectively; and

means for processing at least said first and second groups of signals to obtain camera exposure information.

4,373,794

CENTER MASK-PERSPECTIVE PHOTOGRAPHY

William P. Holman, P.O. Box 12, Ord, Nebr. 68862

Filed Nov. 12, 1980, Ser. No. 205,987

Int. Cl.[3] G03B *1/00*

U.S. Cl. 354—122 **2 Claims**

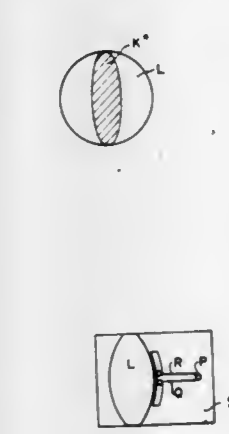

1. Camera apparatus for recording images to be viewed with 3D effect when reproduced and wherein when an image is to be recorded the distance between the lens of the camera and the scene or object to be photographed is set substantially equal to the intended distance between a viewer and a reproduced image of the recorded image during viewing of the reproduced image, said camera apparatus comprising means associated with said lens for recording an image of the scene or object, an opaque mask covering a central portion of said lens, said opaque mask having a long dimension positioned on said lens in a vertical direction relative to said scene or object and a short dimension positioned on said lens in a horizontal direction relative to said scene or object, said long dimension being substantially equal to the diameter of said lens and said short dimension being equal to 2¼ inches divided by the reduction ratio of said lens.

4,373,795

FILM REWINDING DEVICE FOR CAMERA

Hiroyuki Kimura, and Tateo Yamada, both of Yokohama, Japan, assignors to Canon Kabushiki Kaisha, Tokyo, Japan

Filed Apr. 24, 1981, Ser. No. 257,231

Claims priority, application Japan, Apr. 26, 1980, 55-55705; Apr. 26, 1980, 55-55706

Int. Cl.³ G03B *1/18, 17/42*

U.S. Cl. 354—173 10 Claims

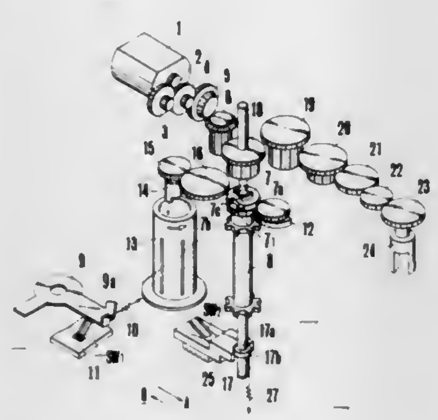

1. A film rewinding device for a camera including:
a film advancing mechanism;
a charge mechanism;
a film rewinding mechanism;
driving means for carrying out a winding operation of the film advancing mechanism and charge mechanism, and a rewinding operation of the film rewinding mechanism; and
changeover means for carrying out changing of said winding operation and said rewinding operation, said means having:
(a) a control member movable between a first position for cooperation with the film advancing mechanism and a second position for cooperation with the film rewinding mechanism, said control member being driven to move by said driving means;
(b) an operating member for moving said control member from one of the first and second positions to the other; and
(c) an engagement member arranged to engage with said control member when it is at the first position and releasable from the engagement with said control member when it is at the second position, said engagement member being associated with the charge mechanism when it is engaged with the control member, and being associated with the charge member when it is released from the engagement with the control member.

4,373,796

FILM END DETECTOR FOR USE IN AUTOMATIC FILM WINDING CAMERA

Tsuyoshi Matsuura, Ina; Hiroshi Fujiwara, Kawasaki; Mamoru Aihara, Hachioji; Yutaka Takahashi, Hachioji, and Yoshio Nakajima, Hachioji, all of Japan, assignors to Olympus Optical Company Ltd., Tokyo, Japan

Filed Oct. 16, 1980, Ser. No. 197,665

Claims priority, application Japan, Oct. 26, 1979, 54-147570[U]

Int. Cl.³ G03B *1/18, 17/18*

U.S. Cl. 354—173 9 Claims

1. A film end detector for use in an automatic film winding camera comprising:
a motor for automatically winding up a film;
a film winding mechanism connected to the drive shaft of the motor for performing a film winding operation;
a photoelectric detector for optically monitoring the rotation of the motor to produce a first signal indicative of the fact that the operation of the motor is in the course of a film winding operation and a second signal indicative of completion of a film winding by an amount corresponding to one frame; and
a motor drive control circuit for producing a detection gate signal after the completion of an interval required for a normal film winding by one frame which occurs in response to the drive by the motor and prior to a subsequent automatic film winding operation and for producing a signal representing a logical product of the detection gate signal during and the first signal.

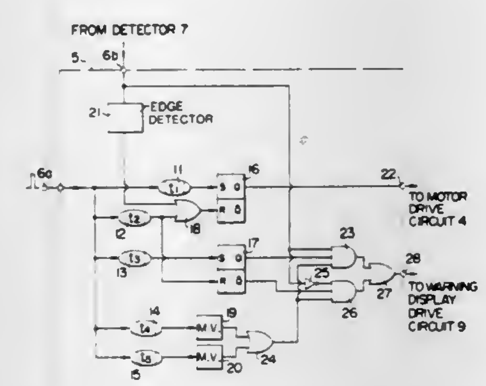

4,373,797

ELECTROMAGNETICALLY DRIVEN SHUTTER

Fumio Shimada, Kawasaki, and Yoji Sugiura, Yokohama, both of Japan, assignors to Canon Kabushiki Kaisha, Tokyo and Canon Denshi Kabushiki Kaisha, Saitama, both of, Japan

Filed Oct. 5, 1981, Ser. No. 308,564

Claims priority, application Japan, Oct. 8, 1980, 55-143814[U]

Int. Cl.³ G03B *9/08, 9/40*

U.S. Cl. 354—234 5 Claims

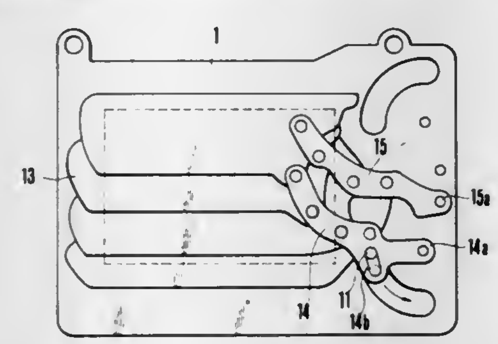

1. An electromagnetically driven shutter comprising:
electromagnetic driving source means;
means for supplying current to said electromagnetic driving source means;
a plurality of shutter blades;
actuating means connected with said shutter blades and receiving the driving force from said electromagnetic driving source means so as to drive the shutter blades for exposure; and
connecting means for connecting said actuating means to said electromagnetic driving source means;
said connecting means being arranged so as to start to move with inception of the current supply to said electromagnetic driving source means and to transmit the driving force thereof to said actuating means with delay after having run a certain determined distance.

4,373,798

DEVELOPING DEVICE WITH SHUTTER BLADE

Shusei Tsukada, Yokohama, and Yasuhide Kurosaki, Mitaka, both of Japan, assignors to Canon Kabushiki Kaisha, Tokyo, Japan

Filed Apr. 18, 1980, Ser. No. 141,588

Claims priority, application Japan, Apr. 23, 1979, 54-50547

Int. Cl.³ G03G *15/09*

U.S. Cl. 355—3 DD 21 Claims

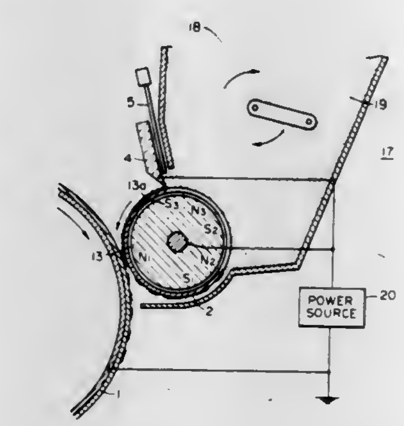

1. A developing device for developing a latent image held on a latent image holding member by application of a developing agent to said latent image, which comprises:
(a) developer holding means disposed in confrontation with the latent image holding member;
(b) developer feeding means to feed the developer to the surface of said developer holding means;
(c) regulating means to regulate the thickness of a developer layer on said developer holding means;
(d) shutter blade means of magnetic material or a magnet positioned and arranged for movement between a contact position where said shutter blade means contacts the surface of said developer holding means and a withdrawn position away from the surface of said developer holding means; and
(e) a fixed magnetic field generating means provided at a position opposite to said magnetic shutter blade means with a portion of the developer holding surface interposed therebetween, wherein said magnetic field generating means attracts said shutter blade means to said portion of the developer holding surface.

4,373,799

MULTI-MODE ELECTROSTATOGRAPHIC PRINTING MACHINE

Christopher Snelling, and Myron J. Lenhard, both of Penfield, N.Y., assignors to Xerox Corporation, Stamford, Conn.

Continuation of Ser. No. 28,616, Apr. 9, 1979, abandoned. This application Jan. 15, 1982, Ser. No. 339,539

Int. Cl.³ G03G *15/14, 15/18*

U.S. Cl. 355—3 R 5 Claims

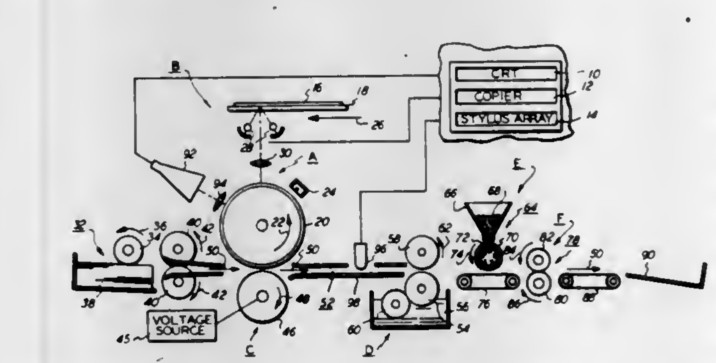

1. A multi-mode electrostatographic printing machine including:
a photoconductive member;
a dielectric member having a substrate coated with a layer of material capable of retaining an electrostatic latent image;
means for transporting said dielectric member along a path of travel which positions said dielectric member closely adjacent to said photoconductive member;
means for charging at least a portion of said photoconductive member to a substantially uniform level;
means for irradiating the charged portion of said photoconductive member with a beam of radiation to record a first electrostatic latent image on said photoconductive member;
means for transferring the first electrostatic latent image from said photoconductive member to said dielectric member;
means positioned along the path of travel of said dielectric member for forming a second electrostatic latent image on said dielectric member;
means for depositing particles on said dielectric member to develop the electrostatic latent image;
means for moistening said dielectric member to increase the conductivity of said dielectric member prior to said depositing means developing the electrostatic latent image with particles;
means for affixing substantially permanently said particles to said dielectric member; and
operator selectable means for energizing said charging means, said irradiating means and said forming means simultaneously or energizing either said charging means and said irradiating means or said forming means independently.

4,373,800

WET TYPE ELECTROPHOTOGRAPHIC COPYING MACHINE

Shin-ichi Kamiyama, Yokohama; Kiyoshi Ohshima, Kawasaki; Manabu Mochizuki, Yokohama; Kazuyuki Kato, Tokyo, and Takeshi Saito, Yokohama, all of Japan, assignors to Ricoh Company, Ltd., Tokyo, Japan

Filed Nov. 18, 1980, Ser. No. 207,999

Claims priority, application Japan, Dec. 3, 1979, 54-155562; Mar. 24, 1980, 55-36221

Int. Cl.³ G03G *15/10*

U.S. Cl. 355—10 8 Claims

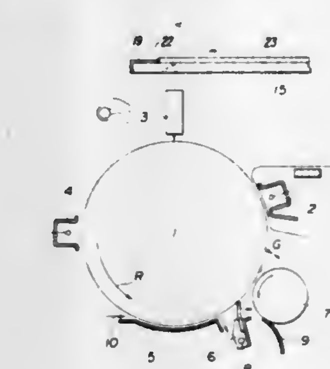

1. In a wet type electrophotographic copying machine capable of performing one copy making process during substantially two revolutions of a photoconductor, which comprises a development section for applying a liquid developer to the surface of a photoconductor which bears an electrostatic latent image, said development section disposed in proximity to the peripheral surface of said photoconductor, along the movement direction of said photoconductor; a cleaning member which is disposed detachably from the surface of said photoconductor on which an electrostatic latent image is formed; and an excess liquid developer elimination member for eliminating the excess developer from the surface of said photoconductor, said excess liquid developer elimination member disposed in proximity to said photoconductor with a small gap therebetween, the improvement comprising means for forming a liquid developer deposition portion by charging and develop-

ment on the downstream side of an image formation area on said photoconductor, with respect to the movement direction of said photoconductor, in said image formation area in which an image to be transferred to an image transfer material is formed, said liquid developer deposition portion capable of substantially narrowing the gap between said photoconductor and said excess liquid developer elimination member.

4,373,801
FIXING TEMPERATURE SELECTING CONTROL IN A COPYING MACHINE
Fukusaburo Itoh, Yamatokoriyama, Japan, assignor to Sharp Kabushiki Kaisha, Osaka, Japan
Filed Oct. 26, 1979, Ser. No. 88,660
Claims priority, application Japan, Oct. 27, 1978, 53-132795
Int. Cl.³ G03G *15/20*
U.S. Cl. 355—14 FU **3 Claims**

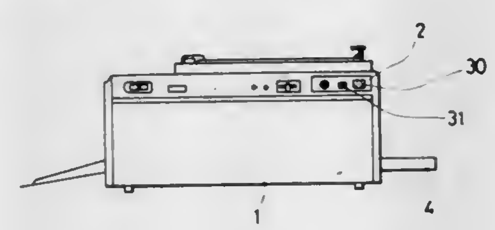

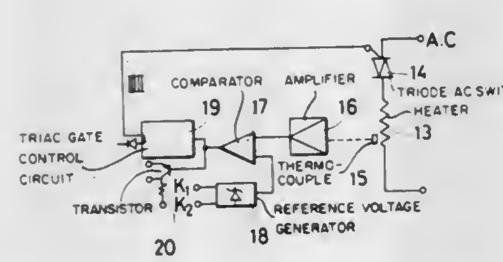

1. An electrophotographic copying machine capable of varying the fixing temperature for fusing a toner image formed on copy paper comprising:
a means for forming a toner image on the surface of said copy paper,
a thermal fixing system for fixing said toner image on the surface of said copy paper,
a fixing temperature control circuit which activates said thermal fixing system,
a first manual switch which initiates the copying operation of said copying machine and said fixing temperature control circuit to activate said thermal fixing system to generate a first temperature for fixing said toner image to a first copy paper, and
a second manual switch which initiates the copying operation of said copying machine and said fixing temperature control circuit to activate said thermal fixing system to generate a second temperature for fixing said toner image to a second copy paper.

4,373,802
PRE-OPERATIVE TIME DISPLAY SYSTEM FOR COPYING MACHINES
Shizuo Yuge, Toyokawa; Nobuo Kitou, Aichi; Toshio Yamamoto, Toyokawa, and Michiru Kanesaka, Sakai, all of Japan, assignors to Minolta Camera Co., Ltd., Osaka, Japan
Filed Dec. 5, 1980, Ser. No. 213,588
Claims priority, application Japan, Dec. 12, 1979, 54-161920
Int. Cl.³ G03G *15/20*
U.S. Cl. 355—14 FU **11 Claims**

1. In an electronic copying machine for reproducing copies of original documents having a heat fixing unit, for fixing toner images formed on the copies, that must be preheated to a predetermined temperature prior to initiation of a copying procedure and having a control console with subjective operator controls to provide a desired operational mode of the copying machine, the improvement comprising:
means for detecting discrete levels of temperature of the heat fixing unit;
control means for providing output signals corresponding to each discrete level of temperature of the heat fixing unit, and

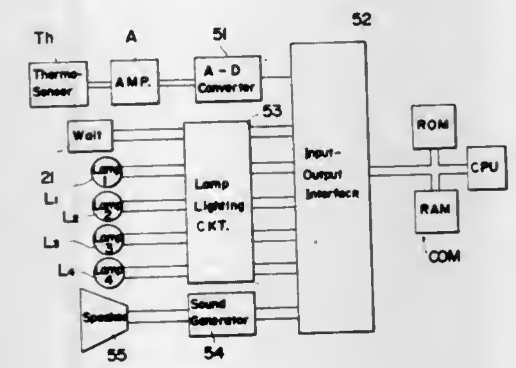

display means operatively positioned relative to the control console and responsive to the output signals to provide an indication to the operator of the status of temperature of the heat fixing unit and its relative timed relationship to the final operative predetermined temperature before initiating a copying operation.

4,373,803
PRECESSION SCANNING SYSTEM FOR COPIER DEVICE
David K. Shogren, Ontario, N.Y., assignor to Xerox Corporation, Stamford, Conn.
Filed Sep. 24, 1980, Ser. No. 190,110
Int. Cl.³ G03G *15/30*
U.S. Cl. 355—49 **6 Claims**

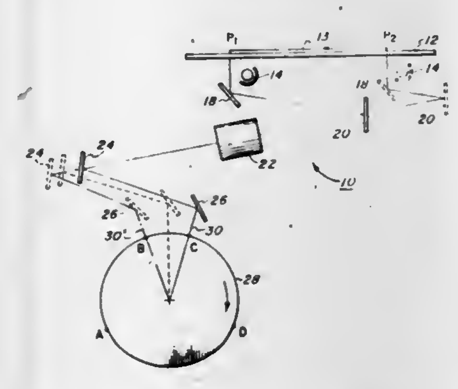

1. A precession scanning system for scanning a document placed on a flat platen and creating a latent image of said document on a drum photoreceptor surface, said system comprising
illumination scanning means for scanning said document including means to move said scanning means from a start-of-scan to an end-of-scan position at a first velocity V_s,
projection means positioned along the system optical path and arranged to transmit reflected images from said document during said scanning towards said photoreceptor,
means for rotating said photoreceptor at a second velocity V_D less than V_s, and
reflector means positioned between said projection means and said photoreceptor, for precessing the projected images onto and along said photoreceptor surface in a direction opposite to the motion of said surface and at a precess velocity V_p equal to $V_s - V_D$ and for movement in synchronism with said scanning means for maintaining the incident angle of said images on said photoreceptor substantially perpendicular to the photoreceptor surface during said scanning.

4,373,804
METHOD AND APPARATUS FOR ELECTRO-OPTICALLY DETERMINING THE DIMENSION, LOCATION AND ATTITUDE OF OBJECTS
Timothy R. Pryor; Bernard Hockley; Nick Liptay-Wagner; Omer L. Hageniers, and W. J. Pastorius, all of Windsor, Canada, assignors to Diffracto Ltd., Windsor, Canada
Filed Apr. 30, 1979, Ser. No. 34,278
Int. Cl.³ G01C *3/10;* **G01B** *11/24*
U.S. Cl. 356—1 **62 Claims**

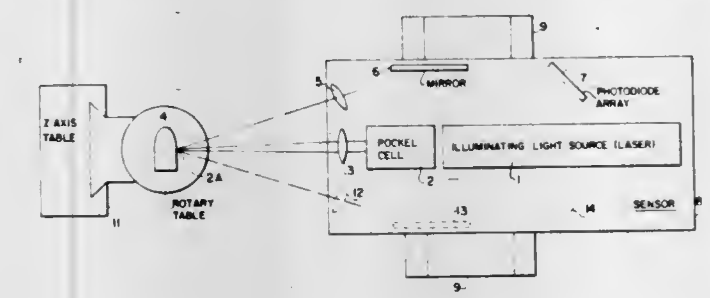

1. A method for determining the dimension, location or attitude of an object surface, comprising projecting a zone of light onto the surface of said object, said zone comprising at least two bright portions with at least one dark portion therebetween,
forming an image of said zone on said surface onto a photodiode array with lens means whose axis is angularly spaced from the axis of said projected light, said image comprising said two bright portions and said dark portion therebetween;
determining from the position of the dark portion of said image on said array relative to said lens axis the location of said surface illuminated by said zone, and
determining from said location of said surface the location, attitude or dimension of said object.

4,373,805
LASER ALTIMETER AND PROBE HEIGHT SENSOR
Richard B. Mallinson, Binghamton, N.Y., assignor to The Singer Company, Binghamton, N.Y.
Continuation of Ser. No. 35,877, May 3, 1979, abandoned. This application Jan. 27, 1981, Ser. No. 228,858
Int. Cl.³ G01C *3/08, 3/10;* **G09B** *9/08*
U.S. Cl. 356—4 **6 Claims**

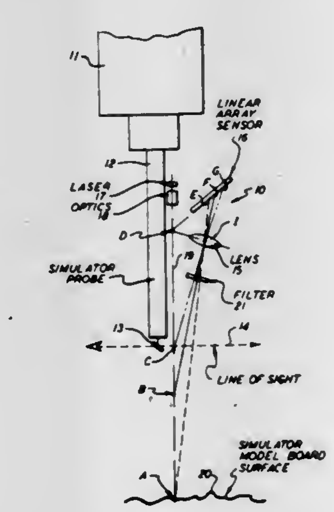

1. In a simulator for providing training in low altitude operation of a flight vehicle, a visual system comprising:
a model board surface on which is arranged a scaled model of a predetermined terrain,
an optical probe for providing a line-of-sight along said terrain on said model board surface,
a laser light source mounted on said optical probe for directing a substantially continuous beam of high intensity light along an axis toward said model board surface to be reflected therefrom,
sensor means mounted on said optical probe in a fixed spatial relationship to said laser light source for developing an electrical signal output indicative of displacement of said laser light that is reflected from said model board surface,
said sensor means having a plurality of separate elongated sensing elements uniformly arranged in a linear scanned array,
first optical lens positioned on said axis to focus said beam of high intensity light sharply at a predetermined point of "minimum" altitude just below the end of said optical probe,
second optical lens positioned to focus at least a portion of said laser light that is reflected from said model board surface to a point on said sensor means,
said second optical lens being positioned substantially perpendicular to a line from said predetermined point of "minimum" altitude just below the end of said optical probe, and
said linearly arranged sensing elements being positioned in a first plane including all of said sensing elements, such that said first plane and a plane including said second optical lens will intersect said axis of the laser light source along a common line, and said common line is perpendicular to said axis of the laser light source,
whereby said laser light that is reflected from said model board surface to said sensor means is in focus over substantially its entire range, with the point of sharpest focus being at said "minimum" altitude.

4,373,806
DYNAMIC TIMING OF ROTATING OR RECIPROCATING MACHINE PARTS
Derrick W. Tipper, Sandiacre, England, assignor to Imperial Group Limited, England
Filed Aug. 26, 1980, Ser. No. 181,405
Claims priority, application United Kingdom, Sep. 12, 1979, 7931700
Int. Cl.³ G01P *3/40*
U.S. Cl. 356—23 **5 Claims**

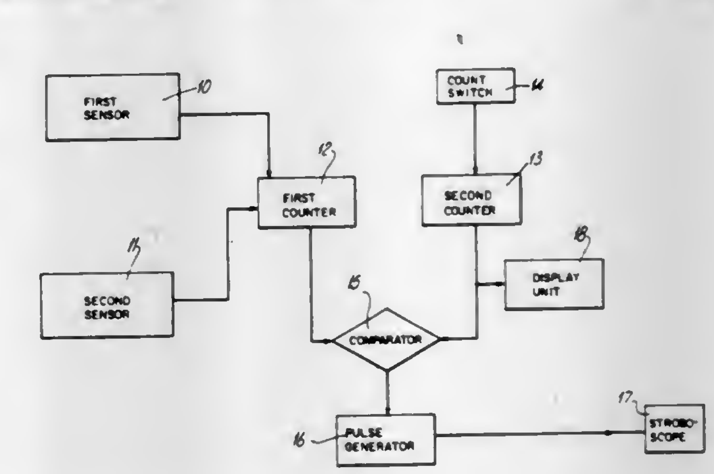

2. For use in a cyclically operating machine having a periodically moving part, apparatus for identifying at a preselected point in the machine cycle the instantaneous position of that part, said apparatus comprising:
(a) sensor means for detecting the start of each operating cycle of the machine,
(b) a first counter for counting segments of the operating cycle and allocating a count number to each segment, including means for resetting the counting at the start of each cycle,
(c) means for selecting and locating a segment of the operating cycle corresponding to the preselected point, said selecting and locating means comprising a second, variable delay counter, comparator means for comparing the count of the first counter with the count of the second

counter and means for generating said actuating signal when the two counts are coincident,
(d) a stroboscope,
(e) means for delivering to the stroboscope the actuating signal indicative of the locating of said segment, and
(f) means for displaying the count number corresponding to said segment.

4,373,807

METHOD AND APPARATUS FOR THE SIMULTANEOUS MEASUREMENT OF DATA, INCLUDING VELOCITY, RELATING TO SUBMICRONIC PARTICLES IN A STATE OF FLOW IN A FLUID

Gerard Gouesbet, Mont Saint Aignan, France, assignor to Agence Nationale de Valorisation de la Recherche (ANVAR), Neuilly sur Seine, France

Filed Feb. 25, 1980, Ser. No. 124,545
Claims priority, application France, Feb. 27, 1979, 79 05089
Int. Cl.³ G01P *3/36;* G01N *15/02*
U.S. Cl. 356—28.5 **12 Claims**

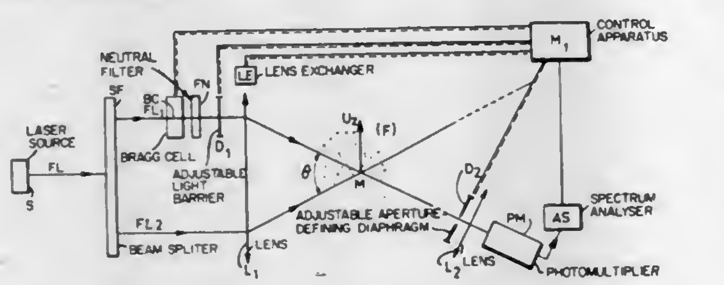

1. A method for obtaining simultaneous velocity and diameter measurements relating to submicronic particles in a state of flow in a fluid comprising the steps of:
producing first and second parallel beams of coherent light from the same laser beam,
focusing said parallel beams in a measuring zone through which the fluid passes,
initially blocking the passage of said first parallel beam to said measurement zone, detecting at a first solid angle of detection the diffused light issuing from said measurement zone, and spectrally analyzing the detected light over a first frequency range to produce a homodyne spectrum, and,
in response to a predetermined critical frequency, unblocking said first parallel beam, detecting at a second solid angle of detection both the diffused light from said second beam and the light from said first beam issuing from said measurement zone, and spectrally analyzing the detected light over a second frequency range to produce a heterodyne spectrum.

4,373,808

LASER DOPPLER ATTITUDE MEASUREMENT

Kynric M. Pell, Laramie, Wyo., and Robert G. Conard, Huntsville, Ala., assignors to The United States of America as represented by the Secretary of the Army, Washington, D.C.

Filed Oct. 20, 1980, Ser. No. 198,322
Int. Cl.³ G01B *11/26;* G01C *1/00*
U.S. Cl. 356—152 **5 Claims**

1. In a tracking system having plural tracking stations for determining the spatial attitude of an object having a longitudinal axis of rotation and wherein a beam of optical energy from a single source is directed from each tracking station toward the object and reflected back to the tracking station from the object, the improvement of first and second optical reflectors disposed on the surface of said object, said reflectors being disposed in a common plane passing through said longitudinal axis and spaced apart on opposite sides of said axis for simultaneously retroreflecting first and second pulses of impinging

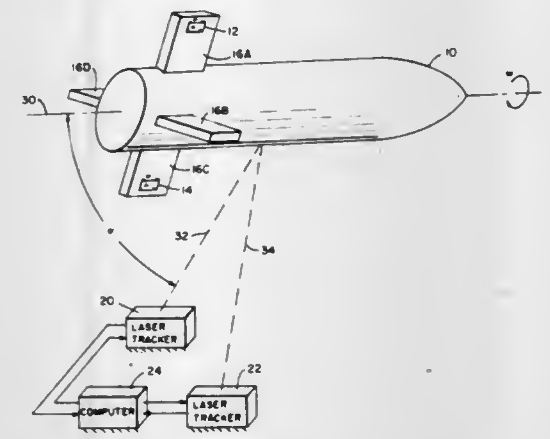

optical energy from a tracking station back to that tracking station during each period of periodic rotation.

4,373,809

SOLAR ENERGY FLUX INTEGRATOR

Klaus Gobrecht, Marinesteig 42, 1000 Berlin 38, Fed. Rep. of Germany

Filed Jan. 21, 1980, Ser. No. 114,006
Claims priority, application Fed. Rep. of Germany, Jun. 20, 1979, 2925382
Int. Cl.³ G01J *1/44, 1/48*
U.S. Cl. 356—215 **8 Claims**

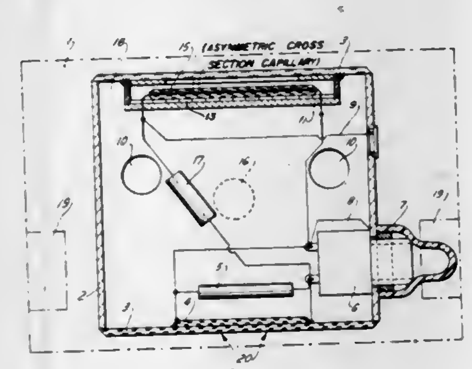

1. An apparatus for integrating solar energy flux on a plane surface comprising a semiconducting solar cell for receiving a solar energy flux, an electrochemical Micro-Coulombmeter connected to receive current from said solar cell, said Micro-Coulombmeter comprising a glass capillary filled with a mercury salt electrolyte having a bubble therein and the capillary containing two mercury electrodes, whereby current-through said Micro-Coulombmeter results in the transportation of said mercury from the positive to negative pole and the migration of electrolyte to the positive pole, and a resistor connected in series with said Micro-Coulombmeter and having a value to slow the movement of said bubble sufficiently when low levels of said solar energy flux are incident on said cell so that said movement is directly proportional to said incident solar energy flux.

4,373,810

AUTOMATED EXPOSURE-CONTRAST CONTROL INDEX METER

James S. Shreve, 10027 Black Ct., Fairfax, Va. 22032

Filed Jun. 6, 1980, Ser. No. 156,909
Int. Cl.³ G01J *1/44;* G03B *7/24*
U.S. Cl. 356—226 **15 Claims**

1. An apparatus for determining a film development parameter value and camera exposure setting for subject matter to be photographed which takes into account film non-linearities comprising,

means for storing data which substantially defines a plurality of film characteristic curves corresponding respectively to a like plurality of film development parameter values,
means for sensing the luminous intensity of certain areas of said subject matter and for providing luminous intensity electrical signals which correspond to said sensed luminous intensities,
means for providing film density electrical signals indicative of respective film densities which it is desired for the

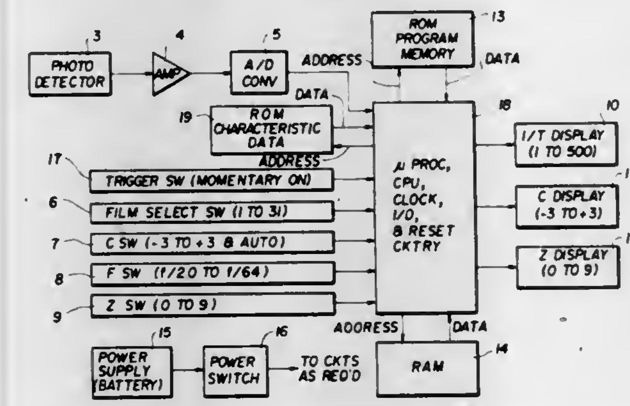

respective luminous intensities of said certain areas to produce on said film,
means for retrieving that portion of said stored data which is representative of characteristic curve values which correspond to said respective desired film densities, and
means responsive to said luminous intensity electrical signals, and said film density electrical signals and to said retrieved date for deriving said film development parameter value and camera exposure setting.

4,373,811

SCOPE FOR VIEWING THE INTERNAL SURFACE OF A BORE OR SIMILAR CAVITY

Ira D. Jones, 1023 S. Main St., South Bend, Ind. 46601

Filed Sep. 26, 1980, Ser. No. 190,998
Int. Cl.³ G02B *23/02*
U.S. Cl. 356—241 **3 Claims**

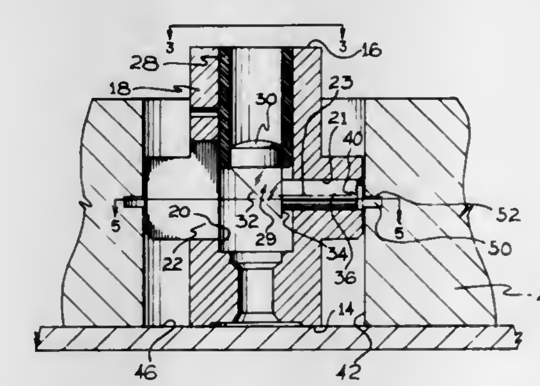

1. A scope for viewing a machined shape on the surface of a bore or a similar cavity formed in a work member having a well defining said cavity, said scope comprising a housing including a side wall, said side wall defining a longitudinal bore therein, said side wall terminating in an upper end face and a lower end face, said longitudinal bore intersecting said upper end face, a transverse bore extending laterally from said longitudinal bore through said side wall, said transverse bore spaced from said lower end face, a viewer including a viewing end and an image transmitting end, said image transmitting end including means for directing image producing light transversely of said viewing end along a transverse axis and reflecting an image of said shape produced by said light to said viewing end, said viewer fitting within said housing with said viewing end being received in said longitudinal housing bore and said light directing means being aligned with said transverse bore, said viewer image transmitting end including an extending light transmitting rod, said rod projecting into said housing transverse bore when said viewer is fitted within said housing, said rod for transmitting said image producing light from said light directing means along said image transmitting end axis toward said cavity shape and an image of said shape to said light directing means for reflection to said viewer viewing end, said housing including a reference surface selectively spaced from said image transmitting end axis and being adapted to fit into said work member cavity with said transverse bore being aligned with said shape when said housing reference surface abuts a specified reference point.

4,373,812

CUVETTE ASSEMBLY

Bernard Stein, Andover; Hamid Keramaty, Lexington, and Romas A. Brickus, Dorchester, all of Mass., assignors to Instrumentation Laboratory Inc., Lexington, Mass.

Filed Mar. 25, 1981, Ser. No. 247,351
Int. Cl.³ G01N *21/07*
U.S. Cl. 356—246 **9 Claims**

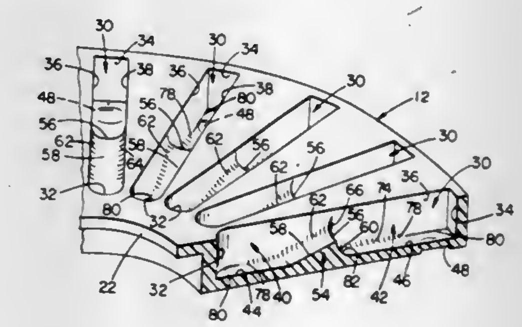

1. An analysis cuvette for separately storing two reaction constituents, said analysis cuvette having a first condition in which said two constituents are stored separate from one another and a second condition in which said two reaction constituents are mixed together to form a reaction product for analysis comprising
structure defining a first chamber region for receiving a first constituent and having a loading port through which said first constituent is introduced into said first chamber region,
structure defining a second chamber region for storing a second constituent and defining a loading port through which said second constituent is introduced into said second chamber region,
barrier structure between said first and second regions and structure defining a transfer passage between said first and second chamber regions, said barrier structure having a crest portion that defines the lower edge of said transfer passage,
one of said constituents including sample material to be analyzed and the other constituent including reagent material for reaction with said one constituent material to provide a reaction product for analysis,
said second chamber region including an analysis region where said reaction project is subjected to analysis,
each said chamber region being defined by opposed planar side wall surfaces and a planar base wall surface,
capillary flow inhibiting structure extending from the crest of said barrier structure along the intersections between said barrier structure and said side wall surfaces, and along a portion of the intersections between said side wall surfaces and said base surface of each chamber region.

4,373,813

CONTROL OF SYSTEM ENERGY IN A SINGLE BEAM SPECTROPHOTOMETER

Taylor A. Reid, Newport Beach; James A. Miller, Fullerton, and Duane G. Barber, Yorba Linda, all of Calif., assignors to Beckman Instruments, Inc., Fullerton, Calif.

Filed Jan. 7, 1981, Ser. No. 223,054

Int. Cl.[3] G01J *3/42*

U.S. Cl. 356—326 **1 Claim**

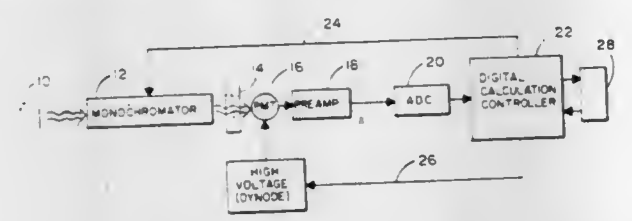

1. For use in a single-beam spectrophotometer which comprises a light source for illuminating a sample with light energy, a detector for receiving light energy from the sample and generating an output signal proportional thereto, means for changing the wavelength setting of light energy received by the detector, and means for changing output signal gain of the spectrophotometer, a method of controlling maximum system energy during measurement of a sample at a plurality of different wavelength settings within a range of wavelength settings for which system energy varies with wavelength comprising the steps of:

(1) developing a light energy vs. wavelength profile for the spectrophotometer by measuring the output signal at a plurality of different wavelength settings;

(2) storing the measured values of output signal vs. wavelength developed in step (1);

(3) selecting a range of wavelength settings for measuring a sample;

(4) setting the spectrophotometer at a first wavelength setting in the selected range;

(5) adjusting output signal gain of the spectrophotometer at the first wavelength setting until the output signal achieves a maximum or optimum value;

(6) developing from the stored output signal vs. wavelength profile a ratio of (a) the value of the stored output signal at the first wavelength setting in relation to (b) the maximum value of the stored output signal within the range of wavelength settings selected in step (3); and

(7) adjusting spectrophotometer output signal gain at the first wavelength setting until the output signal bears the same ratio to the maximum value of the output signal in step (5) as the ratio developed in step (6), whereby sample measurement at wavelength settings within the selected wavelength range may thereafter be executed without saturating the detector.

4,373,814

COMPACT OPTICAL COUPLING DEVICE AND OPTICAL-FIBER INTERFEROMETER GYROMETER COMPRISING SUCH A DEVICE

Michel Lacombat; Georges Pircher, both of Paris, France, and Herve LeFevre, Stanford, Calif., assignors to Thomson-CSF, Paris, France

Filed May 2, 1980, Ser. No. 146,159

Claims priority, application France, May 2, 1979, 79 11020

Int. Cl.[3] G01C *19/64;* **G02B** *7/26*

U.S. Cl. 356—350 **5 Claims**

1. A compact optical coupling device for coupling radiation from a source to two fiber ends, comprising:

an optical element for optical radiation separation or recombination having at least one separation or recombination plane and two flat faces symmetrical with respect to said plane,

two end-pieces each having an endmost flat face and a central channel bonded to said element orthogonal to said flat faces,

a fiber end rigidly held in each of said end-pieces being flush with said flat face,

said end-pieces bonded to said faces of said optical separation element symmetrical with respect to said separation or recombination plane,

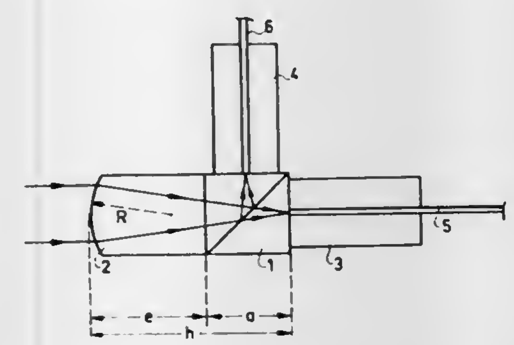

a plano-convex lens whose flat face is bonded to one of said flat faces called input face of the optical element and whose convex input face is such that the radiation having an axis orthogonal to said flat face is focused on said fiber ends.

4,373,815

METHOD AND APPARATUS FOR MEASURING LEAKS IN LIQUID STORAGE VESSELS

Charles R. Bruce, Littleton, Colo., assignor to Marathon Oil Company, Findlay, Ohio

Filed Jan. 5, 1981, Ser. No. 222,806

Int. Cl.[3] G01B *11/02*

U.S. Cl. 356—358 **10 Claims**

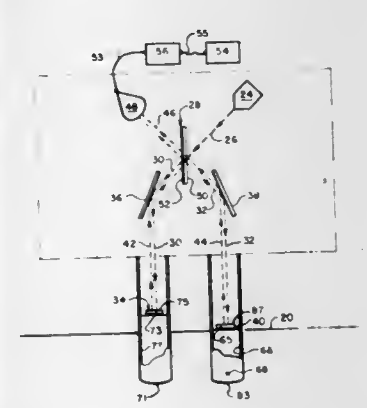

1. An interferometer apparatus for detecting and measuring the rate of leakage in a liquid storage vessel having liquid contained therein, said interferometer apparatus comprising:

a housing,

means for supporting said housing a predetermined distance above the surface of said liquid in the interior of said vessel,

means in said housing for supplying a first laser beam,

means in said housing for splitting said first laser beam into second and third laser beams,

a first hollow tube downwardly extending from said housing and into said liquid, said first tube having means near its bottom for permitting fluid communication between said liquid and the interior of said first tube, said first tube having its hollow interior opening into said interior of said housing,

means in said first tube having an upper reflective surface for floating on the surface of the liquid contained in said first tube,

a second hollow tube downwardly extending from said housing and into said liquid, said second tube being sealed from said liquid and the aforesaid tube containing a predetermined amount of fluid, said second tube having its hollow interior opening into the interior of said housing,

means in said second tube having an upper reflective surface for floating on the surface of the fluid contained in said second tube,

means in said housing for directing said second laser beam onto the reflective surface of said floating means in said second tube and for directing said third laser beam onto the reflective surface of said floating means in said first tube, said directing means being further capable of combining the beams reflected from the two aforesaid reflecting surfaces into a fourth laser beam,

means in said housing receptive of said fourth laser beam for detecting changes in a fringe pattern of the fourth laser beam and for generating a signal representative thereof, said changes being proportional to any leakage into or out of said vessel.

4,373,816

SCANNING BEAM OPTICAL POSITION DETERMINING APPARATUS AND METHOD

Donald L. Laib, Dundee, Oreg., assignor to Morvue, Inc., Portland, Oreg.

Filed Jan. 9, 1981, Ser. No. 223,826

Int. Cl.[3] G01B *11/14*

U.S. Cl. 356—375 **23 Claims**

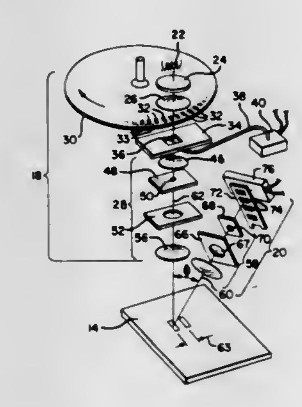

7. Apparatus for measuring the separation between a target surface and a predetermined reference position with a predetermined degree of accuracy within a predetermined range of target surface locations, comprising:

(a) projection means for projecting a pattern of light along a predetermined projection axis and scanning said pattern of light over a target surface at a predetermined sweep rate;

(b) reference means for receiving a reference image of said pattern of light;

(c) reference photosensitive means included in said reference means for producing a reference signal in response to receiving said pattern of light;

(d) receiver means for receiving light reflected from said target surface along a receiver axis having a predetermined angular relationship to said projection axis;

(e) receiver photosensitive means included in said receiver means, for producing a signal in response to receiving a said pattern of a reflected light from said target surface; and

(f) phase detector means for determining the phase relationship between said receiver signal and said reference signal.

4,373,817

COMPUTERIZED MICROMEASURING SYSTEM AND METHOD THEREFOR

Vincent J. Coates, Cupertino, Calif., assignor to Nanometrics Incorporated, Sunnyvale, Calif.

Filed May 22, 1978, Ser. No. 908,260

Int. Cl.[3] G01B *11/02*

U.S. Cl. 356—384 **17 Claims**

1. A system for the measurement of very narrow lines on an object, said system including: microscope means including object illumination means for projecting a magnified image of said object to a focal plane; a photodetector; a housing enclosing said photodetector, said housing having a narrow slit positioned on said focal plane and adjacent said photodetector for transmitting a thin section of said image to said photodetector; a rotatable lead screw on an axis parallel with said focal plane and perpendicular to the slit in said housing; and a traveling nut threaded on said lead screw, said housing being connected to said nut whereby rotation of said lead screw scans said slit across said projected image; the improvement comprising:

a stepping motor coupled to said lead screw, said motor providing a predetermined degree of rotation to said lead screw for each input energizing pulse;

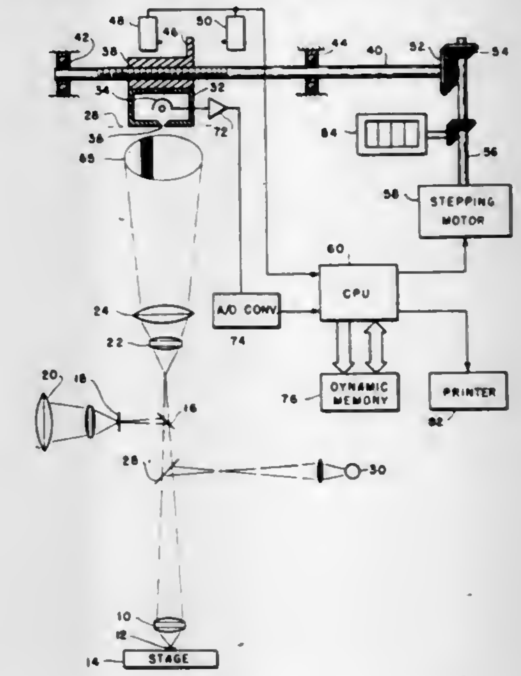

a microcomputer coupled to said photodetector for receiving signals indicative of the amount of radiation sensed by said photodetector, said microcomputer including means for providing energizing pulses to said stepping motor;

a dynamic memory associated with said microcomputer, said memory having means for storing first and second binary coded signals for each position of said stepping motor, said first binary signal representing the photodetector radiation sensed during a reference scan, said second binary signal representing the photodetector radiation sensed during a sample scan; and

ratio means in said microcomputer for dividing said second stored binary signal by said first stored binary signal to obtain a scan ratio at each of said stepping motor positions.

4,373,818

METHOD AND DEVICE FOR ANALYSIS WITH COLOR IDENTIFICATION TEST PAPER

Hiroshi Yamamoto, and Yoshikazu Furutani, both of Kyoto, Japan, assignors to Kabushiki Kaisha Kyoto Daiichi Kagaku, Kyoto, Japan

Filed Jan. 23, 1979, Ser. No. 5,859

Claims priority, application Japan, Jan. 25, 1978, 53-7638

Int. Cl.[3] G01N *21/27*

U.S. Cl. 356—408 **16 Claims**

1. A method for analyzing concentration of substance under analysis in an electronic analytical instrument having a light source, which method determines the concentration by measuring, at at least one wavelength of interest, light reflected from a test piece of paper bearing the substance and light reflected from a standard having a known reflectivity, and by forming a ratio of these measurements, which ratio is corrected for light source intensity variations and for inner stray rays, said ratio being termed the relative reflectivity of the test piece, said method comprising the steps of:

determining a constant of the instrument useful in correcting

the instrument for the effects of light source intensity variations and inner stray rays;

storing said constant electronically;

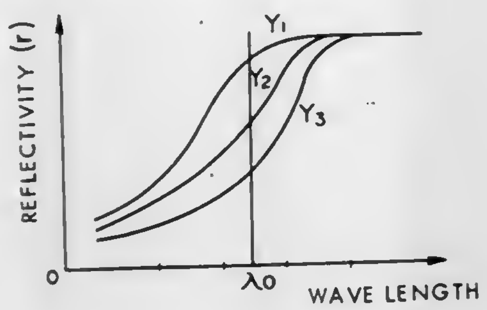

using the stored constant to determine a value proportional to the detected inner stray rays; and

using said value to determine the relative reflectivity of the test piece.

4,373,819
RETROREFLECTOMETER GIVING DIRECT READING

Stefano Pallotta, Rome, Italy

Filed Dec. 22, 1980, Ser. No. 219,390

Claims priority, application Italy, Dec. 21, 1979, 51179 A/79

Int. Cl.[3] G01N *21/55*

U.S. Cl. 356—445 7 Claims

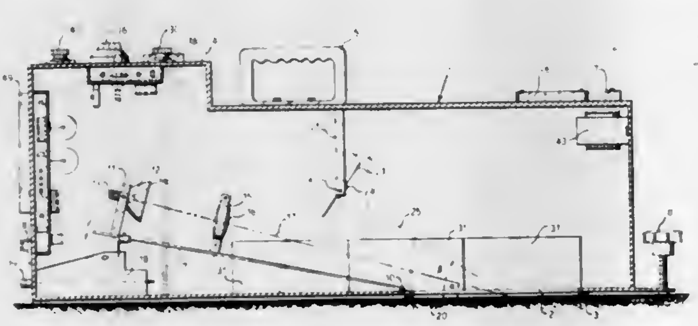

1. A retroreflectometer giving direct readings, for measuring the value or degree of retroreflectivity of a paint applied to the road surface for marking road signs, and consisting essentially of a light-proof box or chamber (1), essentially prismatic in shape, and having in its under-side a rectangular opening or "window" (2) the perimeter of which has a frame (3) of light-proof, flexible material of a kind that will adhere to the surface to which it is placed, the retroreflectometer comprising: a source of light, consisting of a parabolic reflector (12) and a light bulb (14) mounted on a rod (9) free to move in the vertical plane and attached, at one end, to the spindle of a hinge (10) fixed internally to the base of the chamber (1) near the "window" (2) which bounds the sample (20) to be measured, and a convergent lens (16) also mounted on the rod (9) for the purpose of directing on to the sample (20) the beam or ray (17) of light emitted by the source (12, 14) so as to avoid dispersion, the rod (9) being inclinable in relation to the horizontal to at least 3 predetermined angles of inclination, suitable to be selected by means of a selector (18) that can be set from the outside; at least one photo-electric cell (24) able to receive the retroreflected beam or ray of light (25) from the sample (20) under examination, such photo-electric cell (24) being mounted on a small plate (23) fixed to a rotating axle (22) mounted transversely in respect with the side walls of the chamber (1), and in a position such that the length of the retroreflected ray striking the photo-electric cell is about half the focal length of the lens (16)—so that the photo-electric cell (24) is struck by a cone of retroreflected light sufficiently small to obviate the need for optical focusing and/or return systems—, said plate being capable of being set at at least three predetermined angles of inclination, by means of an external knob (26) which turns the axle (22); the value of degree of retroreflectivity of the sample measured by the photo-electric cell (24) being processed, stored and transduced and so made available for reading on display (39).

4,373,820
APPARATUS FOR MIXING RECLAIMED AND VIRGIN POWDER FOR USE IN SPRAY BOOTHS

Jesse Browning, 4217 Via Pinzon, Palos Verdes Estates, Calif. 90274

Filed Mar. 17, 1981, Ser. No. 244,716

Int. Cl.[3] B01F *13/02;* G05D *11/02;* B01F *13/00*

U.S. Cl. 366—101 20 Claims

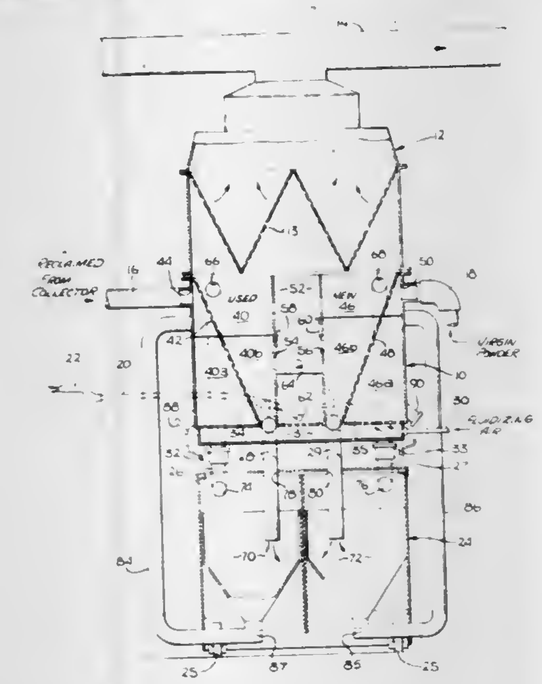

1. An automatic mixing device comprising:

a first chamber having a first aperture in communication with a source of reclaimed powder;

a second chamber having a second aperture in communication with a source of virgin powder;

a means for transporting said reclaimed powder to said first chamber and said virgin powder to said second chamber;

a third chamber having a third aperture in communication with said first chamber, a fourth aperture in communication with said second chamber, and a fifth aperture in communication with a powder spray gun;

a means for fluidizing powder in said first, second and third chambers;

control means for adjusting the area of said third and said fourth apertures whereby the rate of flow of reclaimed powder flowing from said first chamber through said third aperture into said third chamber bears a controllable ratio to the flow rate of virgin powder flowing from said second chamber through said fourth aperture into said third chamber;

whereby said powder spray gun is provided through said fifth aperture with a powder mixture comprising controlled proportions of reclaimed and virgin powder.

4,373,821
ELECTRONIC TIMEPIECE GENERATING DIFFERENT ALARM SOUNDS FOR RESPECTIVE DIFFERENT REGIONS

Morio Morishige, Hachioji, Japan, assignor to Casio Computer Co., Ltd., Tokyo, Japan

Filed Aug. 5, 1980, Ser. No. 175,505

Claims priority, application Japan, Aug. 24, 1979, 54-108302

Int. Cl.[3] G04B *19/22, 23/02;* G04C *19/00*

U.S. Cl. 368—21 6 Claims

1. An electronic timepiece comprising:

a source of reference clock signals;

first time counting means coupled to source of reference clock signals for counting said reference clock signals to obtain time date;

second time counting means coupled to said source of reference signals for obtaining time data which is different from the time date of said first time counting means;

time data display means coupled to said first and second time counting means for displaying the time data obtained from said first and second time counting means;

first alarm time data setting means associated with said first time counting means and being selectively settable to a first alarm time;

second alarm time setting means associated with said second time counting means;

first coincidence signal outputting means coupled to said first time counting means and to said first alarm time data setting means for detecting a coincidence between the

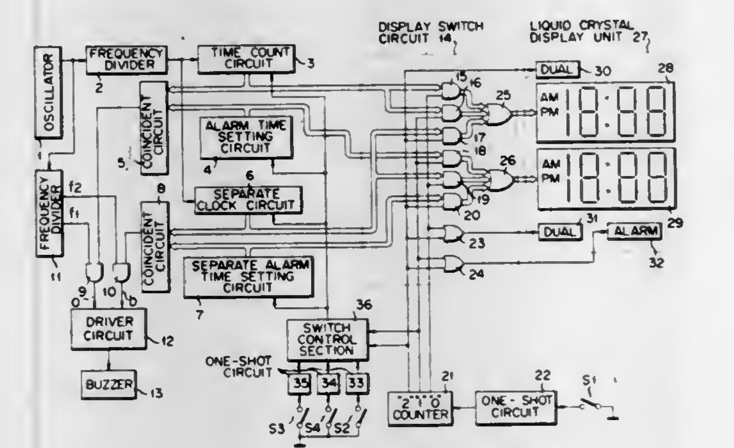

time data of said first time counting means and first alarm time data set in said first alarm time data setting means to output a first coincidence signal;

second coincidence signal outputting means coupled to said second time counting means and to said second alarm time data setting means for detecting a coincidence between the time data of said second time counting means and second alarm time data set in said second alarm time data setting means to output a second coincidence signal; and

alarm informing means for receiving said first and second coincidence signals to produce a first alarm sound responsive to receipt of said first coincidence signal, and a second alarm sound responsive to receipt of said second coincidence signal, said first and second alarm sounds being different from each other and audibly distinguishable from each other.

4,373,822
CLOCK WITH SELECTIVE VISUAL ALARM INDICATORS

Frank S. Tkac, 619 Brighton Ave., Pennside, Reading, Pa. 19606

Continuation-in-part of Ser. No. 52,908, Jun. 28, 1979, abandoned. This application Nov. 17, 1980, Ser. No. 207,803

Int. Cl.[3] G04C *21/16*

U.S. Cl. 368—256 6 Claims

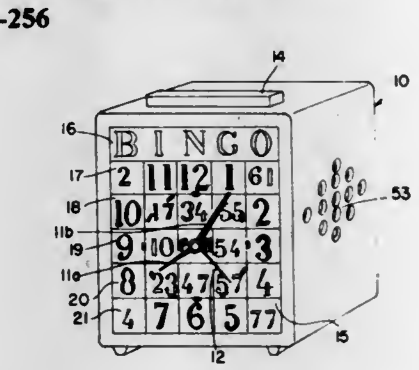

1. In an electrical alarm clock, a face, time-indicating means associated with the face, an alarm, control means for manually pre-setting the time at which the alarm is activated, alarm-indicator means for showing the time at which the alarm is to be activated, a plurality of independently activated visual signals, each capable of providing at the time of the activation of the alarm a visual effect on a different portion of the face, a plurality of independently activated signal devices associated respectively with said visual signals for the activation thereof for providing a visual effect on only a portion of the face, and means responsive to said control means for selectively setting the time at which the signal device is activated for activating that visual signal which provides a visual effect on that portion of the face associated with the time at which the alarm is activated.

4,373,823
RIBBON GUIDE FOR AN INKED RIBBON CARTRIDGE

Walter Albrile, Turin, Italy, assignor to Ing. C. Olivetti & C. S.p.A., Ivrea, Italy

Filed Mar. 20, 1980, Ser. No. 132,395

Claims priority, application Italy, Mar. 22, 1979, 67590 A/79

Int. Cl.[3] B41J *33/10*

U.S. Cl. 400—196.1 12 Claims

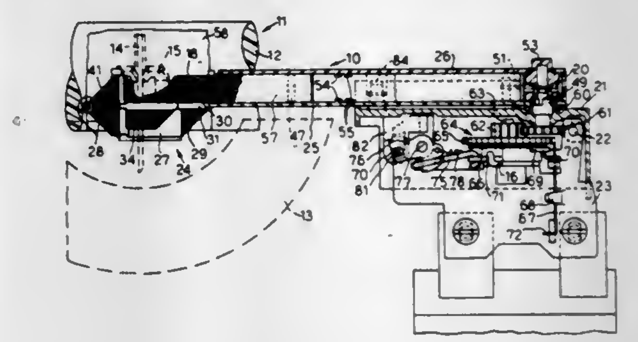

1. A cartridge for an inked ribbon for a typewriter of the type comprising a platen including a printing point, type bars individually selectable to strike the printing point, and a support for said cartridge pivoted on an axis substantially perpendicular to said platen for raising the cartridge, wherein said cartridge comprises a container mountable on said support which stores internally the inked ribbon and includes a bottom wall, a cover spaced from the bottom wall a little more than the height of the inked ribbon and two side walls converging toward a narrow area; and a terminal member projecting from the narrow area of the cartridge for guiding a length of the inked ribbon to the exterior of the container from a side of said narrow area to be struck by a selected type bar and to re-enter the container at the same height as that of the internal inking ribbon; wherein said terminal member comprises:

a fixed end mounted on said container and which defines together with said two side walls of the container an entrance slit and an exit slit for the inked ribbon;

a free end opposite to the fixed end and which includes two converging edges;

an intermediate thin portion connected between the fixed end and the free end and which includes a window and a part lying below said window and the bottom wall of the container, said intermediate portion having an inclined edge; and

a further thin portion projecting from said fixed end which defines a gap between said further thin portion and said intermediate thin portion, said further thin portion including a re-entering edge;

wherein said converging edges guide a portion of said length of inked ribbon along a path which comprises a first part wherein the inked ribbon emerges from the exit slit and crosses the window and a second part wherein the inked ribbon lies in front of said part of said intermediate thin portion and below the first part of said path;

wherein the inclined edge of said intermediate thin portion defines an upward path of the inked ribbon which is bent upwardly with respect to the direction of the second part of said path wherein a part of said inked ribbon is confined

in said gap between said further thin portion and said intermediate thin portion;

wherein the re-entering edge of said further thin portion defines a lateral path of the inked ribbon which is bent laterally with respect to the direction of said upward path of the ribbon and wherein the ribbon reenters said container at the same height of the internal ribbon; and

wherein the intermediate thin portion of said terminal member is configured to lie generally parallel to said platen when the cartridge is mounted on its support and to cause the ribbon crossing said window to be positioned in front of the printing point upon the raising of the cartridge and the window to freely accommodate the striking type bar.

4,373,824

RIBBON TENSION AND METERING CONTROL

Alf J. Olsen, Elk Grove Village, Ill., assignor to Xerox Corporation, Stamford, Conn.

Filed Jun. 22, 1981, Ser. No. 276,064

Int. Cl.³ B41J *33/52*

U.S. Cl. 400—234 **2 Claims**

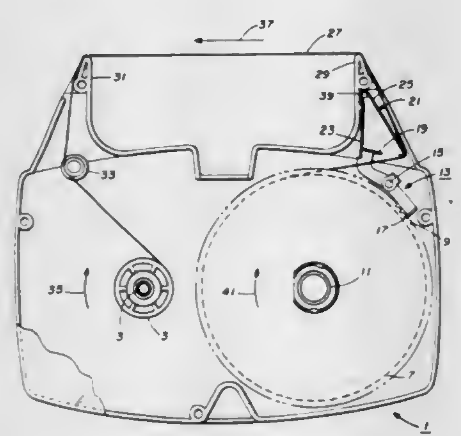

1. A web feeding apparatus including means for rotatably supporting a web supply spool and an incrementally operating take-up spool for pulling a web from said supply spool; the improved web tension and metering control comprising:

ratchet teeth mounted on said supply spool;

a pawl mounted adjacent said ratchet teeth and pivotable into locking engagement therewith; and

a single member web tension spring having a first leg and a second leg, said first leg mounted for urging said pawl into locking relationship with said ratchet teeth, said second leg mounted such that as the tension in a web in contact with said second leg increases, said second leg is urged into contact with said pawl in opposition to the action of said first leg to raise said pawl out of locking relationship with said ratchet teeth, and said second leg stores spring energy to maintain constant tension on the web.

4,373,825

LOOSELEAF PAGE LIFTER

Ray F. Zabielski, P.O. Box 92, Roaring Springs, Tex. 79256

Filed Oct. 10, 1980, Ser. No. 195,758

Int. Cl.³ B42F *13/00*

U.S. Cl. 402—80 L **4 Claims**

1. A page lifting device for use with a looseleaf binder having front and back covers, binding rings and a ring base cover which comprises at least one pair of stiff wire loops rotatably mounted on the top of the ring base cover by a hinge means at or contiguous with the centerline of said ring base cover, said loops being mounted perpendicular to and surrounding at least one of the binding rings and being of sufficient height to freely pass over the binding rings; whereby on closing the looseleaf binder the outermost parts of said loops encounter the inside surfaces of the looseleaf binder's front and back covers, forcing said loops toward the center of said binder and thus forcing the sides of said loops to encounter the bottom edges of any pages contained in said binder, thereby forcing said pages to rise on the binding rings away from the ring base cover toward the uppermost part of said binding rings preventing the pages from being caught between the binding and the inside surfaces of the looseleaf binder's front and back covers, wherein the hinge means by which the stiff wire loops are attached to the top of the ring base cover comprises the ring base cover having two indentations formed in the surface thereof for each of the stiff

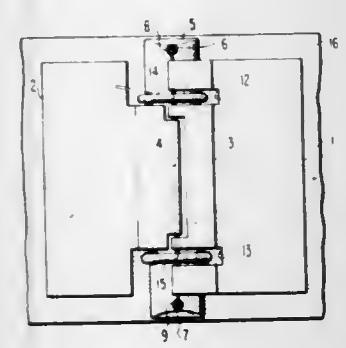

wire loops, at least one end face of each of the indentations having a hole formed therein, and each of the stiff wire loops having its ends angled to lie parallel to the ring base cover; the indentations in said ring base cover and the holes in the faces thereof being located and being of sufficient size to allow the angled ends of the stiff wire loops to be placed therethrough, rotatably attaching the stiff wire loops to the ring base cover.

4,373,826

FASTENER ASSEMBLY

Hiroshi Inamoto; Katsunobu Sobajima, and Shoichi Miyoshi, all of Yokohama, Japan, assignors to Nissan Motor Co., Ltd. and Kato Hatsujo Kaisha, Ltd., both of Yokohama, Japan

Filed Jun. 20, 1980, Ser. No. 161,481

Claims priority, application Japan, Jun. 26, 1979, 54-80419

Int. Cl.³ E04B *1/38*

U.S. Cl. 403—14 **4 Claims**

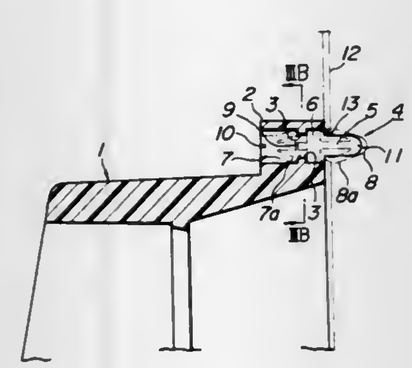

1. A fastener assembly for mounting a constituent member to a receiving member corresponding thereto, comprising:

a hollow cylindrical socket portion integrally formed on the constituent member, said socket portion having a cylindrical opening with a pair of engaging projections extending toward each other in the opening;

a clip having a shaft, a support portion formed at a longitudinal central portion of the shaft and adapted to fit in said opening of the socket portion, a pair of spearhead-shaped snap portions formed at opposite ends of said shaft, whose ends are in the proximity of said support portion, one of which snap portions being adapted to fit in said opening of said socket portion and engage said engaging projections, and at least one small flexible boss formed on said shaft substantially in a plane passing the ends of the spearhead-shaped snap portion to be fitted in said socket, said small boss being angularly offset from said spearhead-shaped snap portion to retain said one of the snap portions in said opening when said one of the snap portions is disengaged from said engaging projections;

said receiving member being formed with a mounting hole so as to receive the other one of said pair of snap portions, said mounting hole having such a shape that, at a first angular position of said clip relative to the mounting hole, said other snap portion securely engages edges of said mounting hole, while when said clip is at a second angular position, said other snap portion is disengaged from said edges of said mounting hole and said constituent member is removable from the receiving member with said clip carried by the constituent member.

4,373,827

ARRANGEMENT FOR THE RIGID CONNECTION OF A DRIVEN SHAFT WITH A GRADUATED DISK OF A PRECISION MEASURING INSTRUMENT

Klaus Arndt, Zurich, Switzerland, assignor to Contraves AG, Zurich, Switzerland

Filed Jun. 18, 1981, Ser. No. 274,871

Claims priority, application Switzerland, Jul. 1, 1980, 5055/80

Int. Cl.³ F16L *11/12;* F16D *1/00, 3/00*

U.S. Cl. 403—24 **4 Claims**

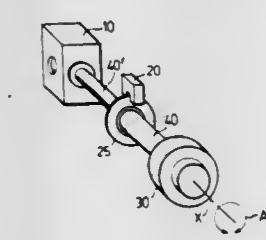

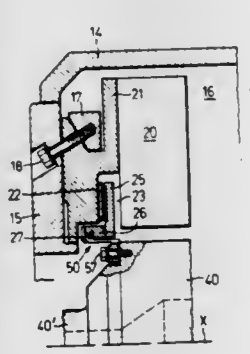

1. An arrangement for the rigid connection of a driven shaft with a graduated disk of a precision measuring instrument, in particular for the rigid connection of an optical drive shaft with a coding disk formed of glass for an angle coding device of an observation periscope, comprising:

a compensation ring;

said compensation ring being rigidly connected for rotation with the coding disk and the driven shaft;

said compensation ring being provided with a first flange radially directed towards the outside and a second flange arranged axially offset with respect to the first flange and radially directed towards the inside;

said compensation ring further comprising a substantially cylinder-shaped sleeve portion interconnecting said two flanges; and

said first flange and said sleeve portion being divided into individual ring segments by peripherally distributed slits.

4,373,828

DEVICE FOR RIGIDLY COUPLING A HANDLE TO ITS CORRESPONDING MANUAL INSTRUMENT, AND AN INSTRUMENT PROVIDED WITH THE SAID DEVICE

Francesco Sartori, Via S. Felice, 44, Bologna, Italy

Filed Dec. 17, 1980, Ser. No. 217,459

Claims priority, application Italy, Dec. 21, 1979, 3572 A/79

Int. Cl.³ B25G *3/00;* F16B *9/00;* F16L *41/00*

U.S. Cl. 403—263 **8 Claims**

1. A device for rigidly coupling a handle to a manual instrument comprising a first substantially cylindrical element having a stem of reduced diameter at one end, a shoulder defined between said stem and the remainder of the element, at least one pair of projections provided on the free end of said stem having surfaces which face towards said shoulder and which are at the same level and slope with respect to the cylindrical axis of said element and with respect to a plane perpendicular to said axis, a threaded portion on said first element, a threaded ring nut for insertion on said element and engagement with said threaded portion, a second substantially cylindrical element having an axial hole of slightly greater diameter than that of the first element for receiving the latter and a number of projections numerically identical to or a multiple of the number of projections on said stem, said projections in said hole being so positioned whereby they can be coupled with the projections

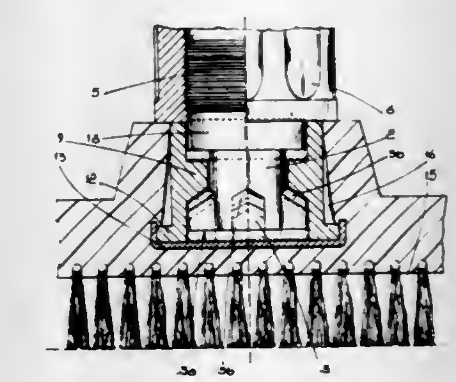

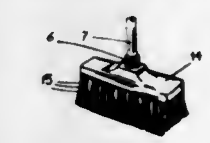

on said stem and having interstices such as to allow the passage therebetween of the projections on said stem, said projections in said hole having surfaces which face towards an end of said hole which receives said first element and which are in the same plane and perpendicular to the cylindrical axis of said second element, and said projections in said hole also having surfaces which face away from the end of said hole which receives said first element which are shaped and sloping so as to accept flush thereagainst the sloping surfaces of the projections on said stem after a limited rotation of the first element with respect to the second element when the first element is inserted into the second element.

4,373,829

DEVICE FOR THE JOINING OF COMPONENTS

Nils Braxell, Kapplandsgatan 96, S-414 78 Göteborg, Sweden

PCT No. PCT/SE79/00231, § 371 Date Jul. 13, 1980, § 102(e) Date Jul. 11, 1980, PCT Pub. No. WO80/00993, PCT Pub. Date May 15, 1980

PCT Filed Nov. 13, 1979, Ser. No. 198,944

Claims priority, application Sweden, Nov. 13, 1978, 7811676

Int. Cl.³ F16B *12/04*

U.S. Cl. 403—267 **4 Claims**

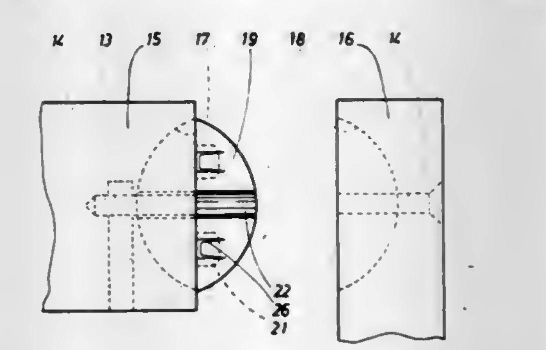

1. A device for connecting components to each other, comprising: at least one connecting piece, which in mounted position of the components is situated in a space formed of recesses in the components in such a manner that they are held together in a definite position, said connecting piece being formed of two thin walls connected to each other at edge-portions and curved outwardly at their center portions, so that a space is

formed between said walls, and at least one opening in said walls, a quantity of glue being placed in said space, the cross-section of the connecting piece at its center portion being larger than the width of said recesses, so that during assembling the double walls are pressed against each other and the glue is pressed out through said at least one opening.

4,373,830

METHOD FOR COUPLING STRANDED CABLE ASSEMBLY TO FITTING COUPLED ARRANGEMENT OBTAINED THEREBY

Haruyuki Ikesue, Fujisawa, Japan, assignor to NSK-Warner K.K., Kanagawa, Japan

Filed Sep. 8, 1980, Ser. No. 185,012

Claims priority, application Japan, Sep. 7, 1979, 54-115005

Int. Cl.³ B25G *3/28*

U.S. Cl. 403—284 4 Claims

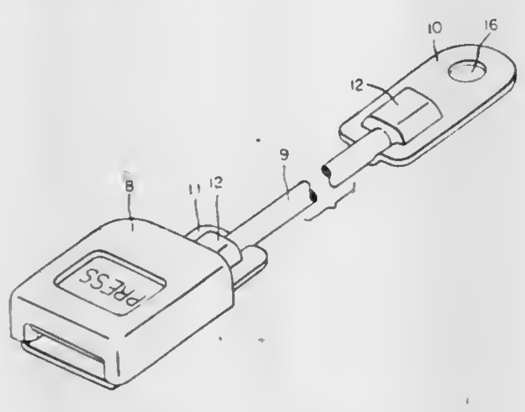

4. A coupled arrangement of a stranded cable assembly and a fitting, in which a sleeve is inserted into an opening provided in the fitting, the stranded cable assembly is inserted into the sleeve, and pressure is applied onto the upper and lower sides of the sleeve in a direction perpendicular to the axial direction thereof to thereby secure said assembly to said sleeve and, at the same time, permit it to bite into the fitting.

4,373,831

KEY DEVICE FOR LOCKING AN ELEMENT TO A SHAFT

John P. Crawford, Marion, Ind., assignor to Thomas A. Grogg and Clarence C. Turner, both of Marion, Ind., part interest to each

Filed Dec. 11, 1981, Ser. No. 329,745

Int. Cl.³ F16D *1/06*

U.S. Cl. 403—318 6 Claims

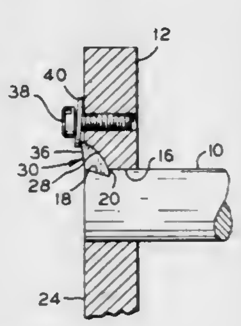

1. A key device for locking an element to a shaft for rotation therewith comprising a shaft having a key-engaging surface provided with first and second opposite ends and which extends axially of said shaft and angles radially inwardly toward the shaft axis from the outer periphery, said first end being at said periphery, said shaft having a radially extending shoulder at said second end, an element having a shaft-receiving opening which receives that portion of said shaft having said key-engaging surface, said element having an outer side and a radially extending keyway which opens through said shaft-receiving opening in registry with said key-engaging surface, said keyway having a rear cam surface which extends angularly from the outer side of said element at a point radially spaced from said shaft-receiving opening to said shoulder on said shaft, a key received by said keyway and provided with a first side portion engaged with said key-engaging surface, a threaded fastener secured to one of said element and shaft and operatively engaged with a second side portion of said key for retaining said key in said keyway and forcing it into engagement with said key-engaging surface, said cam surface being smoothly curved in a direction away from said outer side of said element, said key having a third side portion provided with a curvature which conforms to the curvature of said cam surface.

4,373,832

CONNECTING ROD OR SIMILAR OBJECT HAVING A HOLLOW BODY

Denis Monteillet, Saint Barthelemy de Vals, France, assignor to Societe Anonyme de Recherches de Mecanique Appliquee, Saint Vallier sur Rhone, France

Filed Nov. 6, 1980, Ser. No. 204,766

Claims priority, application France, Nov. 8, 1979, 7928012

Int. Cl.³ F16B *2/14*

U.S. Cl. 403—374 3 Claims

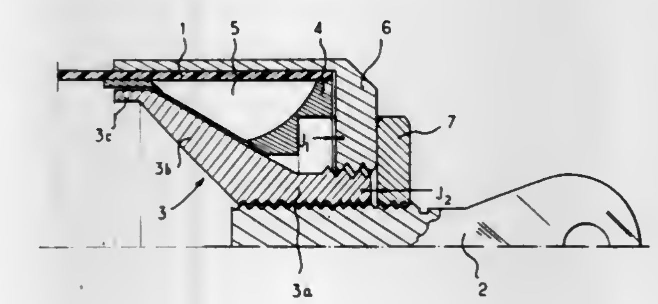

1. A connecting rod for transmitting longitudinal stress, comprising a fibrous tubular body having internal and external diameters and a first end, a connecting end member at said first end of said body, a brace member having internal screw threads and comprising an external frusto-conical section, a radially expansible element having an internal frusto-conical section with the same conicity as said frusto-conical section of said brace member, having an external diameter substantially equal to said internal diameter of said body, and being mounted on said brace member, and a cap surrounding said first end of said tubular body with an internal diameter substantially equal to said external diameter of said body, said connecting end member being independent of said brace member and having external screw threads engaged with said internal screw threads of said brace member, said expansible element comprising an annular member having longitudinal slots therethrough closed at both ends, and said cap being screwed on said brace member.

4,373,833

MACHINE FOR USE IN IMPLANTING PLANT SUPPORTING STAKES

Kazuki Watanabe, P.O. Box 127, Oceanside, Calif. 92054

Filed Nov. 3, 1980, Ser. No. 203,335

Int. Cl.³ E02F *5/10*

U.S. Cl. 405—36 14 Claims

1. A trenching machine to be drawn behind a mobile power unit for use in implanting into the earth support stakes for growing plants;

trenching means for forming a trench in the earth over which the machine traverses;

first guide means for guiding said stakes to a substantially vertical position within said trench;

tamper means for tamping the earth adjacent said trench inserted stakes;

scraper means for scraping at least a portion of the earth disturbed in forming said trench into said trench and for substantially leveling said disturbed earth adjacent thereto; and

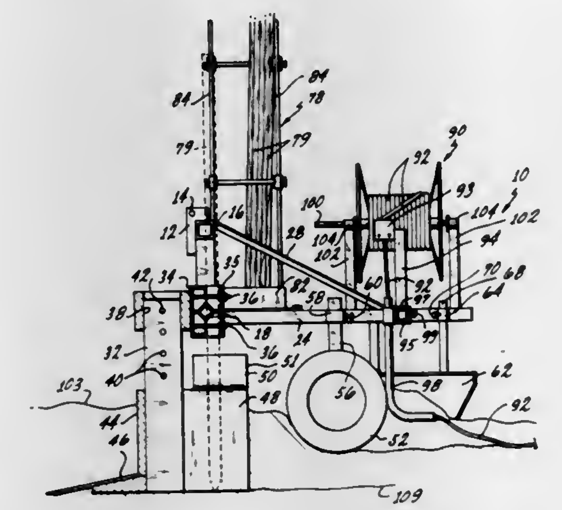

means for depositing irrigation hose adjacent to said trench prior to scraping at least a portion of the earth disturbed in forming said trench into said trench and substantially leveling said disturbed earth.

4,373,834

PORTABLE OFF SHORE WELL INSTALLATION APPARATUS

Frederick J. Grace, 11 Menemsha Way, P.O. Box 151, East Falmouth, Mass. 02536

Filed Dec. 1, 1980, Ser. No. 211,829

Int. Cl.³ E02B *15/04*

U.S. Cl. 405—60 12 Claims

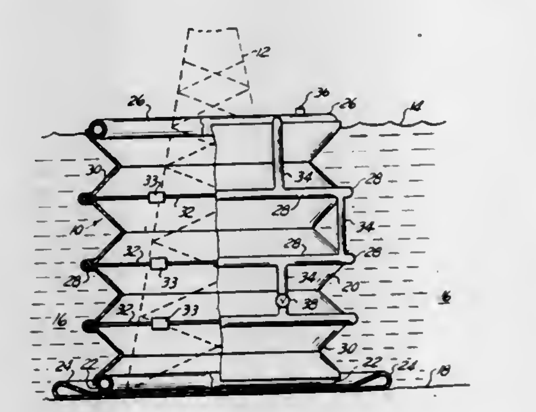

1. A portable off shore well installation apparatus for positioning around drilling equipment between the surface of a body of water and the ground below the water for surrounding a well head to entrap contaminants resulting from drilling operations, said apparatus comprising a curtain having an axially extendable water impermeable sleeve, a submerged ground conforming anchor ring attached at one end of said extendable sleeve, and a float ring for extending said extendable sleeve to the surface of the water attached at the other end of said extendable sleeve, wherein said extendable sleeve has a plurality of longitudinally spaced buoyant rings attached about the periphery thereof to provide lift and rapid substantially uniform extension of said extendable sleeve and said anchor ring is made of a flexible impermeable material which is fillable with a non-buoyant non-rigid substance.

4,373,835

REMOVABLE CLOSURE PLATE

James A. Haney, New Orleans, La., assignor to McDermott Incorporated, New Orleans, La.

Filed Jun. 23, 1980, Ser. No. 161,988

Int. Cl.³ F02B *17/04*

U.S. Cl. 405—195 10 Claims

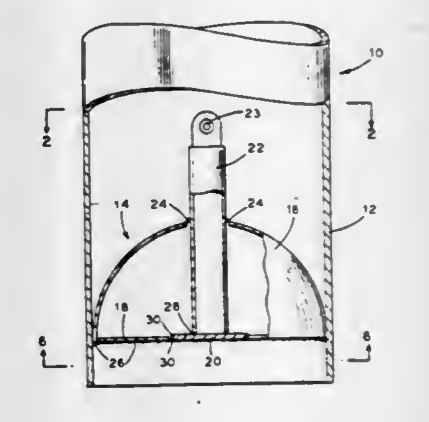

1. An improved removable closure plate of the type used in an elongated hollow tubular column structure which is adapted to be floated to an offshore site where it is immersed by flooding for installation in an upright position wherein the closure plate includes upper and lower portions, a centrally located pull member, the pull member extending through an aperture located in said upper portion and further being removably connected to the upper portion in a liquid tight manner and rigidly connected to the lower portion, the lower portion having a plurality of apertures disposed therein, the closure plate having its circumferential periphery removably connected to the inside surface of the column to form a liquid tight seal, and means for disengaging the closure plate from the column by exerting a force on the pull member sufficient to first rupture the seal about the upper portion and by maintaining a force sufficient to then rupture the seal between the closure plate and the column.

4,373,836

ICE ISLAND CONSTRUCTION

Gordon F. N. Cox, Lyme Center, and Feng H. Hsu, Tulsa, both of Okla., assignors to Standard Oil Company (Indiana), Chicago, Ill.

Filed Feb. 11, 1981, Ser. No. 233,349

Int. Cl.³ E02B *3/00;* F25C *1/02*

U.S. Cl. 405—217 9 Claims

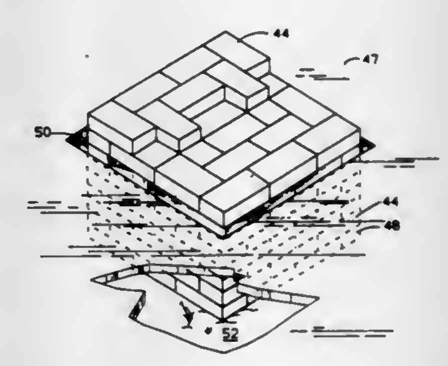

1. A method of constructing an artificial ice island in a marine body of water covered by natural sheet ice in subfreezing temperatures, which comprises:

selecting an area for the ice island;

mining blocks of ice from the natural ice sheet outside said selected area;

cooling said fine blocks by storing them in contact with the air;

then using said cured ice blocks to construct a layer of constructed ice directly on said ice sheet of sufficient mass

so that the natural ice sheet beneath the ice blocks rests on the bottom of the body of water.

4,373,837
PIER WITH PRESTRESSED RESILIANT INTEGRAL DECK TO ABSORB DOCKING FORCES OF SHIPS
Tung-Yen Lin, El Cerrito, and Philip Y. Chow, Orinda, both of Calif., assignors to T. Y. Lin International, San Francisco, Calif.
Filed May 28, 1981, Ser. No. 267,708
Int. Cl.³ B63C *1/00*
U.S. Cl. 405—218 **11 Claims**

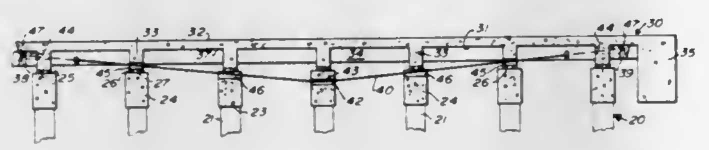

3. A pier, including in combination:
supporting piles,
horizontal pile caps surmounting and connecting said piles together in transverse rows, said pile caps having upper coplanar surfaces with metal bearing strips thereon,
an integrated one-piece deck with an upper surface and bottom surface having transversely extending beams supported atop said pile caps so that it is slidable on said metal bearing strips, having longitudinal depending struts, and having exposed depending wharf edges, and
a series of prestressing post-tensioned tendons each slidably connecting said deck to said pile caps,
whereby, when a wharf is struck by a ship, the internal work performed by the lengthening and shortening of the tendons and by the sliding friction between the deck and the pile caps absorbs the impact loads.

4,373,838
VACUUM SEWAGE TRANSPORT SYSTEM
Brian E. Foreman, and John M. Grooms, both of Rochester, Ind., assignors to Burton Mechanical Contractors Inc., Rochester, Ind.
Filed Feb. 13, 1981, Ser. No. 234,110
Int. Cl.³ B01D *1/00;* **B65G** *53/00*
U.S. Cl. 406—14 **14 Claims**

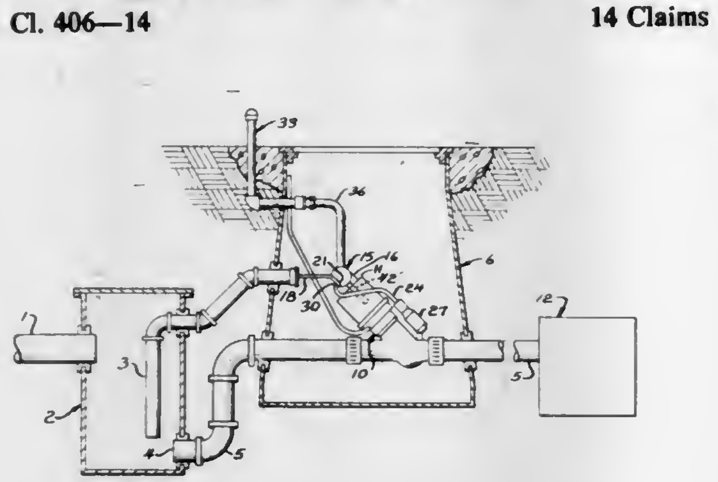

1. A vacuum sewage transport system comprising
a sewage holding means,
a sewage transport conduit connected to the holding means at one end and a sewage collecting means at another end for collection of sewage from the holding means,
valve means in the transport conduit disposed between the holding means and the collecting means to selectively control sewage transport from the holding means to the collecting means,
means for maintaining low pressure or vacuum conditions in the conduit between the valve means and the collecting means,
the valve means being operated by differential pressure applied thereto to open and close the sewage transport conduit and selectively permit sewage transport from the holding means to the collecting means,
a pressure differential operated apparatus for automatically controlling the operation of the valve means in the transport conduit to selectively control the alternate opening and closing of the valve means and transport conduit and to thereby control the flow therethrough of sewage from the holding means to the collecting means, the apparatus having a pressure sensor means connected at one end in pressure communication with the sewage holding means but closed to fluid communication through the sensor means to the holding means,
the pressure sensor means connected at another end in pressure communication with the valve means through sequentially activated differential pressure responsive control elements disposed between the pressure sensor means and the valve means and including means for alternately connecting the elements to the low or vacuum pressure in the transport conduit and a source of relatively higher pressure,
the sensor means acting to sense pressure variations in the sewage holding means and in response to a predetermined sensed pressure condition in the holding means to sequentially activate the differential pressure responsive control elements to operate the valve means to open the sewage transport conduit and permit sewage transport from the holding means to the collecting means, and
means for closing the valve means by sequentially reversing activation of the differential pressure responsive control elements in response to another pressure condition in the holding means, and automatically conditioning the pressure sensor means without fluid communication through the sensor means to the holding means for subsequent pressure responsive sewage transport.

4,373,839
DRILL BIT
Hideo Negishi; Kaoru Goto, both of Tokyo, and Sueji Takaya, Kawasaki, all of Japan, assignors to Mitsubishi Kinzoku Kabushiki Kaisha, Tokyo, Japan
Filed Sep. 30, 1980, Ser. No. 192,627
Claims priority, application Japan, Oct. 2, 1979, 54-127046; Nov. 15, 1979, 54-158626[U]; Nov. 15, 1979, 54-158627[U]; Nov. 15, 1979, 54-158628[U]; Dec. 29, 1979, 54-182582[U]; Dec. 29, 1979, 54-182583[U]; Feb. 15, 1980, 55-17567; Jul. 10, 1980, 55-94389; Aug. 28, 1980, 55-122286[U]
Int. Cl.³ B23B *51/00, 51/02, 51/06*
U.S. Cl. 408—59 **9 Claims**

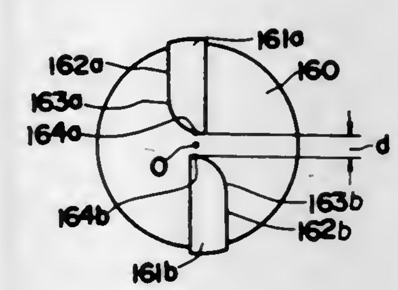

1. A drill bit for drilling a hole in a metal workpiece which comprises a body having a shank portion and an end face at its forward end and an axis of rotation therethrough, said body having at its forward end a pair of cutting means each having at least one cutting edge, said cutting edges being disposed symmetrically relative to said axis of rotation, each cutting edge having a first and second portion, the said first portion of one of said cutting edges lying on one side of a common diameter and the said first portion of the other cutting edge lying on the opposite side of said common diameter, each said first portion being remote from said axis of rotation and each lying substantially along a straight line, each said second portion extending generally convexly arcuately from one end of said respective first portion to the end of said respective cutting edge, said respective end of said cutting edge being located on the side of said common diameter opposite to the side on which said respective first portion of said respective cutting edge lies, the radially innermost point of said second portions of said cutting edges being equally spaced from said axis of rotation by a distance between 0.1 to 1.25 mm to thereby define a groove having walls between said cutting means, the depth of said groove being not less than 0.2 mm whereby a central core formed in said groove during a drilling operation will be twisted off by the opposed walls of said groove, the opposed walls of said groove extending along said axis of rotation.

4,373,840
PALLET TRANSFER SYSTEM
Leonard A. Miller, Jr., Fond du Lac, Wis., assignor to Giddings & Lewis, Inc., Fond du Lac, Wis.
Filed Mar. 28, 1980, Ser. No. 135,037
Int. Cl.³ B23Q *7/02*
U.S. Cl. 414—225 **45 Claims**

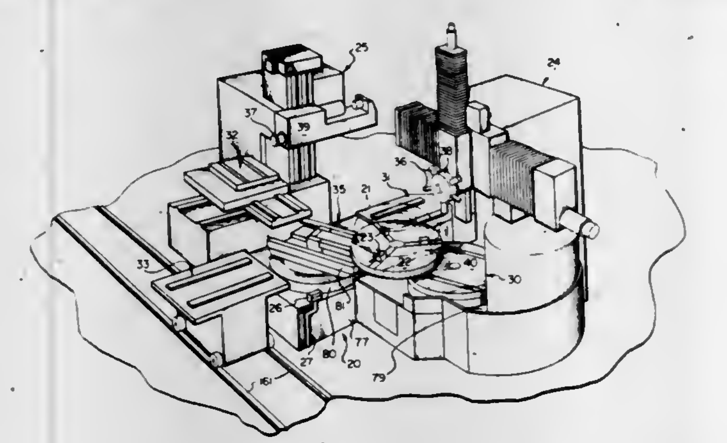

1. A workpiece handling system for transferring workpieces between a number of stations, each station having a pallet receiving device, the system comprising the combination of a stand having a rotatable slideways base, a slideways ram carried for reciprocation on the slideways base and adapted to receive workpiece-carrying pallets, a latch means carried for reciprocation on the ram for engaging the pallet and drawing the pallet over the ram, and alignment means for aligning a pallet receiving device located at a station with the ram, the alignment means including male alignment means having at least one beveled surface and carried on one of the ram and pallet receiving devices, and female alignment receiving means having surfaces matable with the male alignment means and carried on the other of the ram and pallet receiving device for receivably engaging the male alignment device.

4,373,841
QUICK RELEASE LOAD SECURING DEVICE
Franklin P. Adler, Michigan City, Ind., and Rudolph E. Nadherny, Naperville, Ill., assignors to Illinois Railway Equipment Company, Chicago, Ill.
Filed Oct. 6, 1980, Ser. No. 194,059
Int. Cl.³ B60P *7/10;* **B61D** *3/16, 45/00*
U.S. Cl. 410—34 **23 Claims**

1. Integral, telescoping quick-release device for anchoring lading strapping to railway freight cars, comprising:
a housing secured to a railway freight car, said housing having an opening through an upper panel thereof;
a sleeve in sliding, operative interengagement with said housing, said sleeve having a longitudinal axis, at least a portion of said sleeve being slidable through said opening of the housing, said sleeve having a bore;
abutment means of said sleeve for engaging the upper panel of the housing at a location to prevent upward passage of said sleeve completely through said opening;
an anchor rod in sliding, operative interengagement with said sleeve, at least a portion of said anchor rod being slidable through said bore of the sleeve;
snubber means secured to said anchor rod;
receiving means on said anchor rod for securing a length of lading strapping to the quick-release device and for transmitting tension within the lading strapping to the snubber means; and
locking means for rotation about the longitudinal axis of said sleeve, said locking means engaging said sleeve with said housing at a locked position in which said sleeve is collapsed within said housing and for rotationally unlocking the quick-release device to reduce the tension within the snubber means.

21. The combination of a railway freight car of the type having a deck and a side sill with a device for securing cargo thereonto by lengths of lading strapping anchored by a quick-release device having receiving means for holding the lading strapping over the cargo, the quick-release device being an integral, telescoping device comprising:

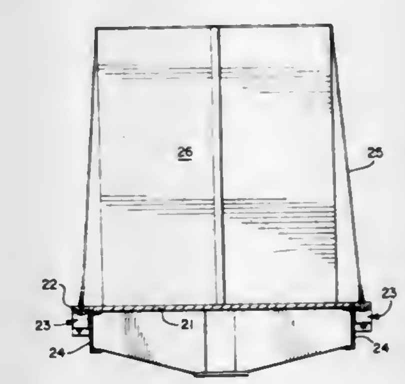

a housing secured to the side sill of the railway freight car, said housing having an opening through an upper panel thereof;
a sleeve in sliding, operative interengagement with said housing, said sleeve having a longitudinal axis, at least a portion of said sleeve being slidable through said opening of the housing, said sleeve having a bore;
abutment means of said sleeve for engaging said upper panel of the housing at a location to prevent upward passage of said sleeve completely through said opening;
said receiving means including an anchor rod in sliding, operative interengagement with said sleeve, at least a portion of said anchor rod being slidable through said bore of the sleeve;
snubber means secured to said anchor rod, said snubber means being tensioned by tension within the lading strapping;
locking means for rotation about the longitudinal axis of said sleeve, said locking means engaging said sleeve with said housing at a locked position in which said sleeve is collapsed within said housing and for rotationally unlocking the quick-release device to reduce the tension within the snubber means.

4,373,842
PLASTIC-HEADED FASTENER ASSEMBLY
John E. Bettini, Elgin, and John F. Nelson, New Lenox, both of Ill., assignors to Illinois Tool Works Inc., Chicago, Ill.
Filed Oct. 20, 1980, Ser. No. 198,686
Int. Cl.³ F16B *23/00*
U.S. Cl. 411—377 **5 Claims**

1. A plastic-headed fastener assembly for use in attaching a first panel of a first thickness to a second substantially thicker member comprising a metal screw fastener having a threaded shank and having a head at one end thereof, said head having rotation inducing surfaces, the threads beneath the head having

a first outside diameter; a plastic head member overlying the metallic head and being affixed thereto, said plastic head mating with and transmitting the rotational forces to the metallic head, a first outer sealing flange of the plastic head member extending outwardly and downwardly from the edge of the underlying metallic head, said downward extent being for a first axial distance relative to the screw, a second inner sealing flange extending generally downwardly and substantially parallel to the axis of said fastener for a second axial distance

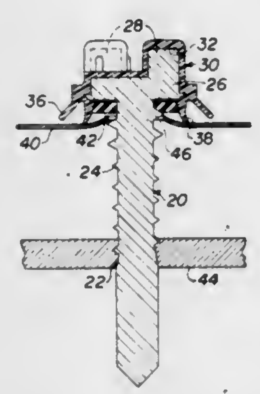

relative to the screw, said second axial distance being substantially greater than said first axial distance, the second sealing flange having an inside diameter which is greater than said first outside diameter by at least several times the first panel thickness whereby said second sealing flange acts to prevent the creation of significant friction between the plastic head member and the panel being attached by allowing said fastener to easily strip out a hole in said first panel before fully engaging said second member.

4,373,843
PADDING PRESS
Franklin D. Lang, Mission Viejo, Calif., assignor to Nitney Corporation, Laguna Hills, Calif.
Filed May 4, 1981, Ser. No. 259,972
Int. Cl.³ B42C *13/04;* **B30B** *1/30*
U.S. Cl. 412—10 **20 Claims**

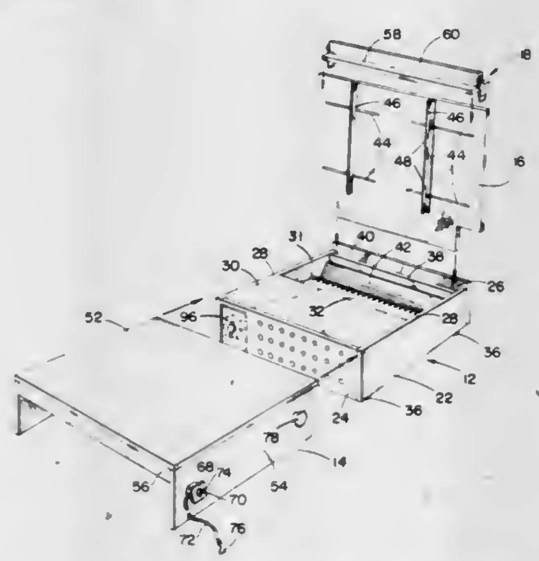

1. An apparatus for padding paper comprising:
a base member including a top surface;
a support board assembly slideable upon the top surface of the base member, the support board assembly including a main support board and a catch member which is adapted to limit the sliding motion of the support board assembly on the base member so as to cause the support board assembly to occupy at least one predetermined position on the base member;
an adjusting board removably attachable to the base member in a position wherein the adjusting board is substantially orthogonal to the main support board;
a clamping board adapted for exerting a downwardly projecting clamping force upon a stack of paper positioned between the main support board and the clamping board;
clamping means attached to the clamping board and the support board assembly for applying the clamping force upon the clamping board;
adjusting means including a pair of parallel disposed adjusting rails, for continuously adjusting a gap adapted to align the stack of paper in operative position on the main support board, the adjusting means being attached to the adjusting board, and
blower means incorporated in the base member and actuable at the option of an operator for blowing air upon a glued edge of the stack of paper clamped between the main support board and the clamping board.

4,373,844
SEMIAUTOMATIC MACHINE FOR ASSEMBLING PAPER DUST JACKETS ON NEW HARD COVER BOOKS
John A. Conroy, 14833 Furman St., Forest Lake, Minn. 55025
Filed Oct. 14, 1980, Ser. No. 196,435
Int. Cl.³ B24C *5/00*
U.S. Cl. 412—24 **8 Claims**

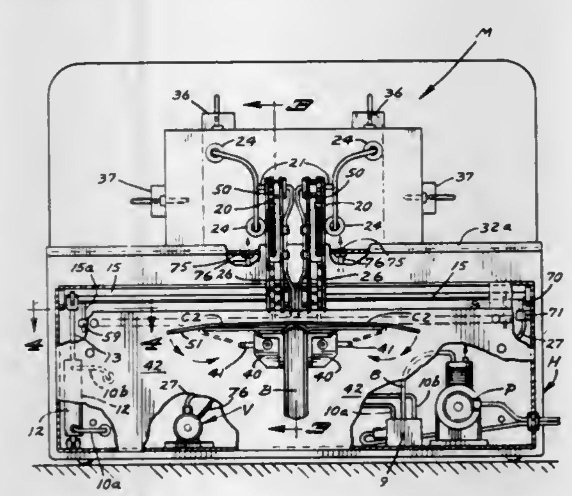

1. A semiautomatic book jacket assembling machine comprising,
a base structure,
means for supporting a stack of paper book jackets in predetermined position on the base,
means for positioning a book in predetermined position on the base with the two covers positively held in opened co-plannar, substantially horizontal relationship,
gripping means for engaging and holding the outer jacket in the stack,
power-actuated transfer means mounted on the base for removing the jackets one at a time from said supply stack and transferring the same to the cover of a book held by said positioning means in centered relationship on said book cover to permit an operator to fold the flap portions around the cover and complete the assembly operation,
said jacket gripping means includes a plurality of suction cups,
said transfer means includes a transfer arm assembly carrying said suction cups to move the jackets one at a time from stacked position to discharge position on said opened book cover, and
also including means for rotating each jacket from the plane defined by the outer jacket of the supply stack to the plane defined by the opened book cover.

4,373,845
ANIMAL FEED TRANSPORT AND SELF-UNLOADING VEHICLE
Donald L. Henke, Maple Plain, Minn., assignor to Veda, Inc., Long Lake, Minn.
Continuation-in-part of Ser. No. 955,971, Oct. 30, 1978, abandoned. This application Jan. 7, 1981, Ser. No. 222,963
Int. Cl.³ B60P *1/42*
U.S. Cl. 414—326 **3 Claims**

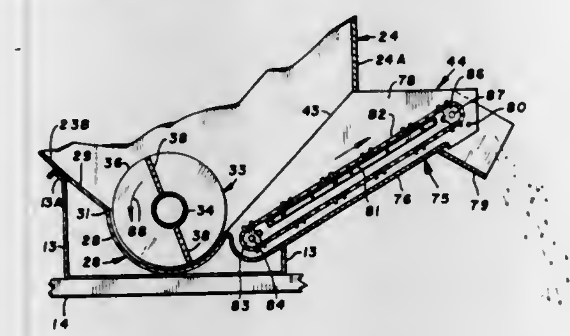

1. An animal roughage feed handling apparatus for delivering roughage feed to a selected location comprising: a hopper having a first upper side wall, a second upper side wall, a bottom wall, and end walls forming a chamber for holding roughage feed, said bottom wall including an arcuate longitudinal trough section canted about a longitudinal axis, and first and second upwardly and outwardly inclined sections extending from opposite sides of the trough section, said first and second inclined sections merging at their upper ends respectively into said upper side walls, an auger located in the chamber adjacent to said trough section, said auger having a longitudinally extending shaft between said end walls and helical flight means secured to said shaft, said helical flight means having an outer edge, means rotatably horizontally mounting said shaft on said end walls for rotation about the longitudinal axis of said shaft, said trough section and said first inclined section of said bottom wall defining therebetween a longitudinal break line extended continuously between said end walls, said break line being located in a horizontal plane intersecting the longitudinal axis of the shaft and in close adjacent relationship with the outer edge of said helical flight means, said canted trough section located in close adjacent relationship with the outer edge of said helical flight means and extending from said break line through an arc on the order of 135 degrees to merge with said second inclined section, said outer edge of the helical flight means being uniformly spaced inwardly from the break line along the horizontal plane intersecting the longitudinal axis of the shaft, said trough section being spaced radially outward a small and uniform distance from the outer edge of the helical flight means whereby roughage feed does not wedge between the helical flight means and the break line and helical flight means and the trough section, said second inclined section extending generally tangentially from said trough section at a location below said horizontal plane of the auger shaft axis, means to rotate said auger in a direction so that a first lateral portion of the auger moves downwardly past said break line toward said trough section and a second lateral portion thereof opposite the first lateral portion moves upwardly away from said trough section and from said second inclined section, and a discharge opening through said tangential second inclined section through which feed is discharged by the rotating auger.

4,373,846
PANEL TRANSFERRING APPARATUS
Carl D. Charbonnet, 4800 Divison Ave., Birmingham, Ala. 35222
Filed Oct. 24, 1980, Ser. No. 200,417
Int. Cl.³ B65G *1/06*
U.S. Cl. 414—331 **1 Claim**

1. Apparatus for transferring panel-like members selectively from a supporting cage in which the panel-like members are supported in vertically spaced relation to each other with the apparatus including an elongated reciprocable bar-like member carried by a supporting frame, the improvement comprising:
(a) a horizontal, movable plate-like member detachably connected to the lower end of said cage,
(b) a hydraulic cylinder mounted within the confines of said supporting frame in laterally spaced relation to said cage and connected to said plate-like member for moving said cage upwardly and sequentially through a series of movements to selected vertical positions and downwardly to a lowermost position,
(c) a proximity sensor operatively connected to said cylinder and carried by said supporting frame in position to sense the upper surface of the uppermost panel-like member carried by said cage and limit upward vertical movement of said cage in response to movement of each said uppermost panel-like member to a predetermined uppermost position with each successive upward movement of said cage placing said uppermost panel-like member carried therein in said predetermined uppermost position and in alignment with said bar-like member,
(d) a first limit switch limiting upward movement of said cage to an uppermost position,
(e) a second limit switch limiting downward movement of said cage to said lowermost position,

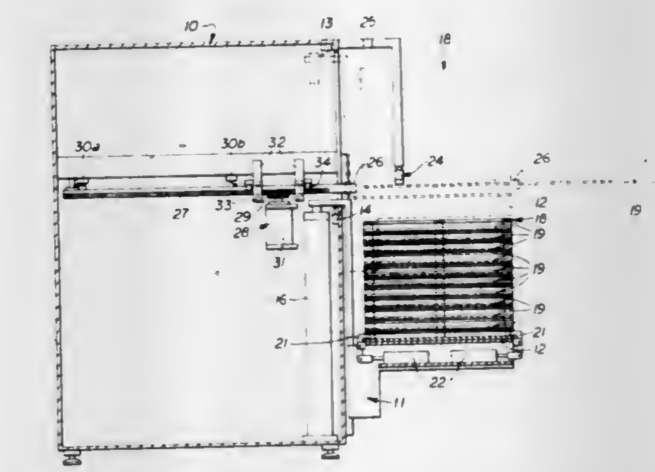

(f) a pinion drive unit carried by said frame and engaging an elongated rack carried by said bar-like member with said pinion drive unit and said rack imparting horizontal rectilinear movement to said bar-like member selectively to a retracted position with the outer end of said bar-like member being inwardly of the adjacent edge of said uppermost panel-like member and to an extended position to eject said uppermost panel-like member from said cage,
(g) at least one pair of oppositely disposed and vertically spaced roller-like members carried by said frame in position to engage the upper and lower surfaces of said bar-like member and limit vertical movement thereof upon movement of said bar-like member to and from said extended position so that said bar-like member travels in a rectilinear direction above and out of engagement with the panel-like member subjacent thereto,
(h) at least one pair of oppositely disposed and laterally spaced roller-like elements carried by said frame in position to engage said bar-like member and limit lateral movement thereof, and
(i) stop means carried by said frame and operatively connected to said pinion drive unit for limiting movement of said bar-like member to said extended position and to said retracted position.

4,373,847
RELEASABLE LOCKING DEVICE
Steven J. Hipp, Milwaukee, and Norbert Hahn, Cudahy, both of Wis., assignors to Rite-Hite Corporation, Cudahy, Wis.
Filed May 4, 1981, Ser. No. 260,340
Int. Cl.³ B60R *9/06;* **B60D** *1/00*
U.S. Cl. 414—401 **13 Claims**

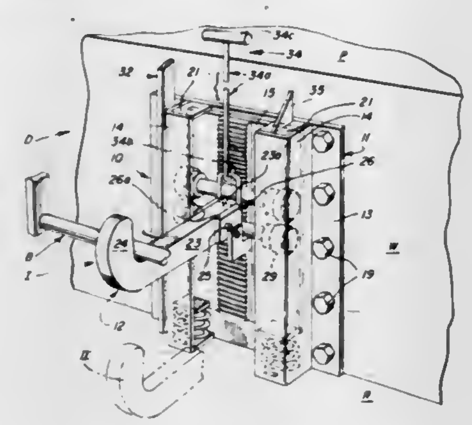

13. A releasable locking device for securing a parked vehicle to an adjacent upright structure, said device comprising a first means having a first member fixedly mountable on the structure and a second member mounted on said first member for limited substantially vertical relative movement, said second member being upwardly biased to assume a normal rest position; second means mounted on said first means for substantially vertical movement relative thereto between operative and inoperative modes, the location of said second means when in an inoperative mode being a predetermined distance beneath the location of said second means when in an operative mode; and third means for releasably retaining said second means in an operative mode, said third means having a first element carried by the second member of said first means, and a complemental second element carried by said second means, said first and second elements coacting with one another to prevent movement of said second means from an operative mode to an inoperative mode; said second means including a first section projecting outwardly from said first means, one end of said first section being connected to said first means and being guided thereby for selective relative movement in a predetermined substantially vertical path, and a second section extending angularly upwardly from said first section and being spaced outwardly from said first means, said second means, when in an operative mode, being adapted to interlockingly engage a portion of the parked vehicle disposed intermediate the second section and said first means; said second means, when in an inoperative mode, being adapted to be in a nonlocking relation with the parked vehicle; the second member of said first means being movable downwardly from the normal rest position only when a depressive external force exerted on said second means, while the latter is retained in an operative mode, exceeds the biasing force applied to said second member.

4,373,848
METHOD AND APPARATUS FOR EXPOSING CONTENTS OF AN OPENED ENVELOPE WITH GRAVITY ASSIST
Cliff Bishop, Elmhurst, Ill., assignor to AES Technology Systems, Inc., Elk Grove Village, Ill.
Filed Sep. 22, 1980, Ser. No. 189,227
Int. Cl.³ B65G *65/00*
U.S. Cl. 414—403 **4 Claims**

1. An apparatus for closing opened, emptied envelopes wherein each envelope has first and second panels separated from each other along all but one straight edge portion where the panels remain connected and wherein the first and second panels are opened and lie on opposite sides of said connected edge portion, said apparatus comprising:

(a) means for moving said empty envelopes along a path seriatim with said first and second panels positioned on opposite sides of said connected edge portion and with said first panel trailing said second panel;

(b) deflecting means in said path for presenting a deflecting surface against which said second panel impinges and moves upwardly along;

(c) abutment means below sad deflecting means for presenting an abutment surface against which said connected edge portion and said first panel fall and slide downwardly along; and

(d) rotating roller means, adjacent said deflecting means and said abutment means, for engaging said second panel and propelling said envelope along said abutment surface to close said first and second panels.

4. An apparatus for exposing the contents of an envelope which has first and second opposing panels wherein the panels have been separated from each other along all but one straight edge portion where the panels remain connected, said apparatus comprising:

(a) continuously operating first moving means for moving said envelope along a first path, said first moving means including continuously moving first conveyor means and first means for reducing the pressure at the surface of said first conveyor means when said envelope is on said first conveyor means whereby said envelope is held against said first conveyor means by the pressure differential between the ambient atmospheric pressure and the reduced air pressure under portions of said envelope on said first conveyor means;

(b) aligning means along said first path for temporarily interrupting the movement of said envelope along said first

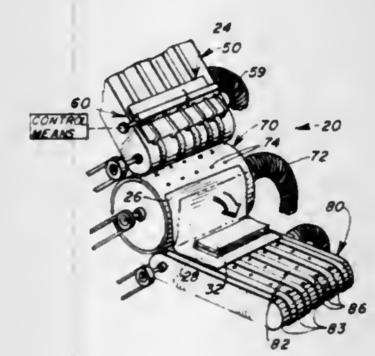

path and for aligning said envelope relative to said first path with said one straight edge portion aligned generally perpendicular to the direction of movement of the envelope along said first path;

(c) control means responsive to the presence of said envelope in said first path for effecting actuation of said aligning means to allow said continuously operating first moving means to move said envelope further along said first path;

(d) tilting means at the end of said first moving means for receiving said envelope from said first moving means and for gripping said first panel of said envelope and for tipping said envelope to orient the connected edge portion of the envelope below the rest of the envelope to permit the ungripped second panel to fall away from the gripped first panel under the influence of gravity, said tilting means including a generally cylindrical member oriented with the longitudinal axis generally normal to the direction of movement of the envelope along said first path on said first moving means, said cylindrical member having an interior chamber portion and defining in the exterior surface of the member a plurality of apertures communicating with the interior chamber portion, said tilting means further including means for reducing the pressure within said interior chamber of said cylindrical member whereby said envelope first panel is held against said cylindrical member by the greater ambient air pressure, and in which said tilting means includes means for rotating said cylindrical member to move at least said gripped

panel of the envelope in a locus defined by a portion of a circular arc with the connected edge portion of the envelope leading the movement of the envelope in said locus; and

(e) continuously operating second moving means adjacent said tilting means for receiving said ungripped second panel as it falls away from said first panel and for moving said envelope along a second path away from said tilting means to move said first panel off of said tilting means onto said second moving means with the first and second panels opened and lying in said second path on opposite sides of said connected edge portion with the envelope contents thereby exposed on top of at least one of said first and second panels, said second moving means being disposed relative to both said first moving means and said cylindrical member so as to result in said cylindrical member being located between said first and second moving means, said second moving means including continuously moving second conveyor means and second means for reducing the pressure at the surface of said second conveyor means when said envelope is on said second conveyor means whereby said envelope is held against said second conveyor means by the pressure diferential between the ambient atmospheric pressure and the reduced air pressure under portions of said envelope on said second conveyor means.

4,373,849
REFUSE CONTAINER LIFT POCKET
Jimmie R. Robinson, Silver Lake, Ind., assignor to Flint & Walling, Inc., Silver Lake, Ind.
Filed Jul. 24, 1980, Ser. No. 171,751
Int. Cl.³ B65F *3/04*
U.S. Cl. 414—408 **6 Claims**

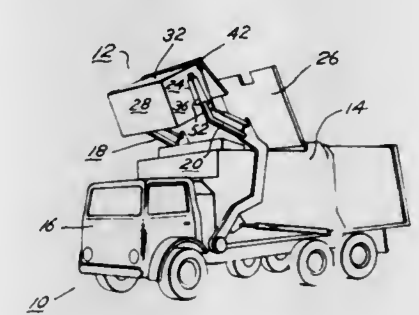

1. In combination with a vehicle having lift arms having horizontal upper surfaces and being forwardly movable on a horizontal plane, and a refuse container of the type which is lifted and inverted by a refuse collecting truck for emptying the refuse contained therein and which has a front wall, a back wall, end walls therebetween, a floor, and a hinged lid: a lift pocket mounted on and projecting outwardly from the outside surface of each end wall, each pocket having opposite open ends and a top plate, a bottom plate and a side plate joined to the outer edges of the top and bottom plates, said top plate sloping downwardly toward the rear end of the pocket relative to the horizontal upper surface of said arm, for initial engagement at said rear end by said horizontal upper surface of said arm for supporting and tilting the container toward the truck as the container is lifted for inversion to remove the refuse therefrom.

4,373,850
AUTOMATIC FUEL CONTROL SYSTEM
M. E. Durham, 4 Rangeview Cir., Greenville, S.C. 29611
Filed Feb. 14, 1980, Ser. No. 121,633
Int. Cl.³ E02F *3/74*
U.S. Cl. 414—699 **6 Claims**

1. A system for automatically regulating the fuel supplied to an engine of a mobile construction machine including a hydraulic pump driven by said engine, a tool carried by said machine for performing work functions, at least one hydraulic cylinder for manipulating said tool responsive to pressurized fluid being supplied to said hydraulic cylinder from said hydraulic motor, a reservoir of hydraulic fluid, hydraulic lines providing communication between said reservoir, hydraulic motor and said hydraulic cylinder, a manually operated valve mechanism for controlling the flow of hydraulic fluid between said hydraulic pump and said hydraulic cylinder, and a lever arm for regulating the flow of fuel to said engine, the improvement comprising:

a double action cylinder having:

(i) fluid ports adjacent opposed ends of said cylinder;

(ii) a piston carried in said double action cylinder;

(iii) a piston rod carried by said piston extending out of one end of said cylinder;

means connecting said piston rod to said lever arm for mov-

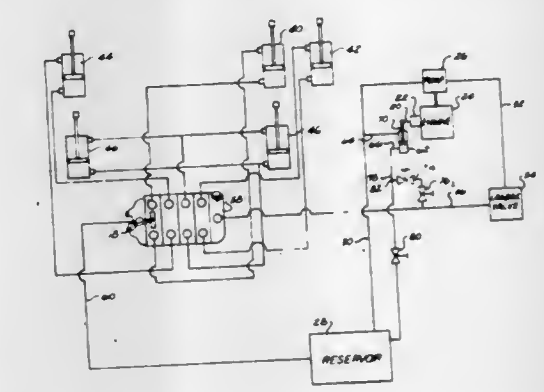

ing said lever arm responsive to the movement of said piston in said double action cylinder;

a hydraulic line connected between said valve mechanism and said hydraulic pump and one of said fluid ports of said double action cylinder for shifting said piston responsive to movement of said manually operated valve mechanism;

bypass openings provided in said double action cylinder for allowing a bleed-through of fluid from one side of said piston to the opposed side for minimizing the response time for movement of said piston responsive to pressurized hydraulic fluid being supplied to said hydraulic cylinder;

whereby said piston causes said lever arm to be moved for regulating the flow of fuel to said engine responsive to the flow of hydraulic fluid being supplied to said hydraulic cylinder.

4,373,851
BULLDOZER AND BACKHOE LOCK DEVICE
Richard J. Confoey, 15846 Heiser Rd., Berlin Center, Ohio 44401
Filed Oct. 9, 1980, Ser. No. 195,376
Int. Cl.³ B66F *9/20;* **F15B** *15/26*
U.S. Cl. 414—722 **2 Claims**

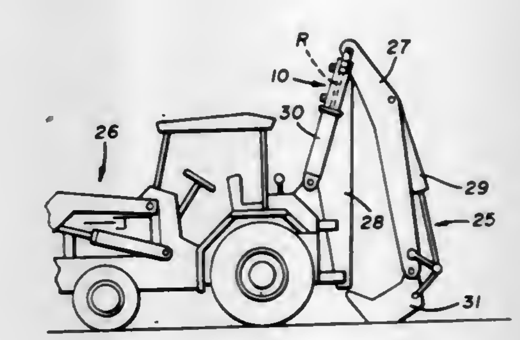

1. A locking device for use on a piston rod of a hydraulic piston and cylinder assembly of a bulldozer, tractor, backhoe, and the like arranged to hold an implement thereof in an extended position and comprising a cylindrical sleeve of a length to fit said piston rod in its extended position, said cylindrical

sleeve consisting of a pair of sleeve halves having oppositely disposed longitudinally extending meeting edges, half circular portions of an annular flange on one end of said sleeve halves of a diameter greater than the diameter of the cylinder of said piston and cylinder assembly, means hinging said sleeve halves to one another and secondary means for locking said sleeve halves to one another, oppositely disposed outwardly extending solid arms on the other end of said cylindrical sleeve arranged to cover pivoted portions including the pivot of said bulldozer, tractor, backhoe and the like.

4,373,852

QUICK COUPLING AND RELEASE MECHANISM FOR BUCKETS

Herman J. Maurer, Burlington, Iowa, assignor to J. I. Case Company, Racine, Wis.

Filed Jul. 6, 1981, Ser. No. 280,654

Int. Cl.^{3} E02F *3/70*

U.S. Cl. 414—723 **3 Claims**

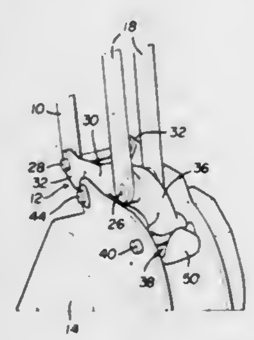

1. A quick attachment and release mechanism for attaching a bucket to a loader scoop arm having extensible and retractable push-pull links operatively attached thereto, said mechanism comprising:

a quick coupler pivotally mounted to one end of said scoop arm for receiving various types and sizes of buckets, said quick coupler having a three leg configuration including a hub, a pair of spaced apart depending legs pivotally mounted to opposite sides o said scoop arm end, and a third leg extending from said hub in a cantilevered fashion, said third leg having a slotted end for selective engagement with a mounting pin on said bucket, said push-pull links pivotally connected at one end to said quick coupler third leg and said hub being pivotally attached to attaching points on said bucket by a releasable mounting pin.

4,373,853

LOG HANDLING MACHINE

Cleveland J. Biller, and Benjamin C. Thorner, both of Morgantown, W. Va., assignors to The United States of America as represented by the Secretary of Agriculture, Washington, D.C.

Filed Jul. 23, 1980, Ser. No. 171,625

Int. Cl.^{3} B66C *23/00;* **B60D** *1/02*

U.S. Cl. 414—732 **12 Claims**

1. A self-contained log handling attachment for use with a self-propelled vehicle, said vehicle comprising power take-off means, said attachment comprising self-contained hydraulic pump means, means to connect said hydraulic pump means to said vehicle power take-off means, said hydraulic pump means supplying power for substantially all functions of said attachment, said attachment comprising supporting bracket means, means to rigidly secure said supporting bracket means to the rear portion of the vehicle, whereby the rest of said attachment is readily mounted and dismounted on and off said supporting bracket means on said vehicle without affecting said vehicle's normal operating abilities, upstanding boom support means vertically journalled on said supporting bracket means, means to adjustably rotate said boom support means relative to said supporting bracket means to selected angular positions covering a full 360° circle of said attachment about a substantially vertical axis of rotation of said support relative to said supporting bracket means, an articulated boom assembly pivotally connected to the upper portion of said upstanding boom support means, an operator's cab mounted on said attachment for rotation together with said articulated boom assembly, said supporting bracket means providing a substantially rigid connection of said log handling attachment to said vehicle such that said log handling attachment can operate in all positions in said 360° circle of rotation; and said rigid connection and the weight of said vehicle adding together and acting to increase the load handling capability of said log handling attachment

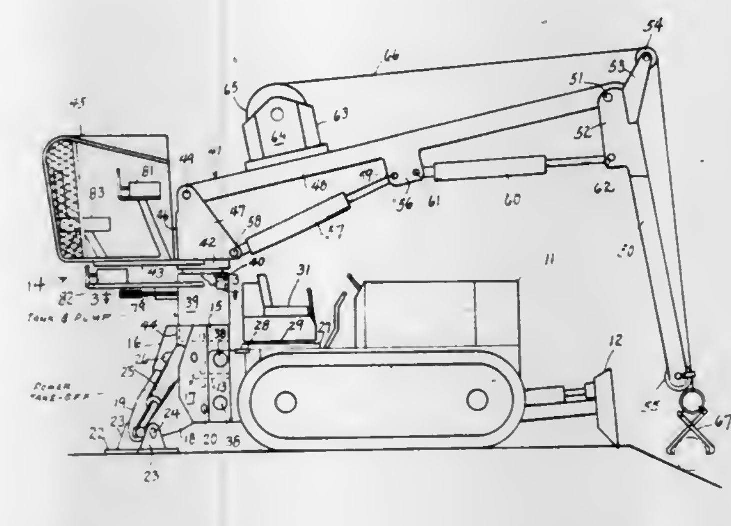

when said log handling attachment is substantially axially aligned and overhead with respect to said vehicle; means in said cab for controlling all functions of said attachment, winch means mounted on said articulated boom assembly adjacent said upstanding boom support means, cable guide means on said articulated boom assembly, said cable guide means comprising a cable guide pulley rotatably mounted at a hinge portion of said articulated boom assembly, said winch means having a cable engaged over said cable guide pulley, log-engaging tool means connected at the end of said cable, and said cable guide means further comprising a shielded end guide pulley at the end of said articulated boom assembly.

4,373,854

WARP BEAM INSERTION CARRIAGE

Hans-Werner Schultheis, Kunzell, Fed. Rep. of Germany, assignor to Hubtex Maschinenbau GmbH, Petersberg, Fed. Rep. of Germany

Filed Sep. 3, 1980, Ser. No. 183,742

Claims priority, application Fed. Rep. of Germany, Sep. 4, 1979, 2935624

Int. Cl.^{3} B60P *1/20*

U.S. Cl. 414—742 **8 Claims**

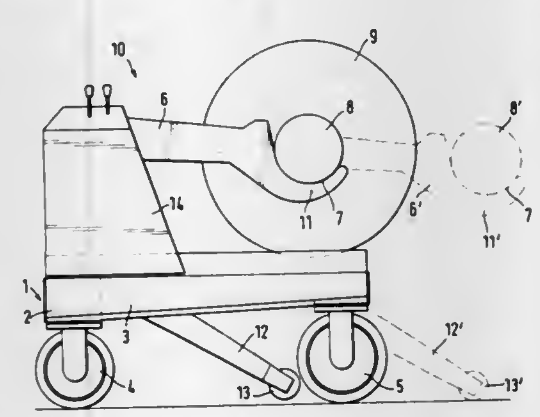

1. A carriage for inserting warp beams into a weaving machine and for effecting movement of a warp beam with respect to a generally horizontal support surface, the warp beam having an axis extending from end-to-end of the warp beam, the warp beam also having a journal extending from the ends thereof, the carriage comprising:

a frame, one side of which is for facing the weaving machine, the other side of which is for facing away therefrom;

guide rollers on said frame, said guide rollers supporting said frame on the support surface to permit movement of said frame relative to the support surface;

a plurality of support arms coupled with said frame for supporting the warp beam, said support arms having front ends for engagement with the journal of the warp beam; said front ends of said support arms being adapted to be raised or lowered with respect to the horizontal support surface;

means for displacing said front ends of said support arms with respect to said frame in a displacement path which is transverse to the axis of the warp beam and in a forward direction, said forward direction running in a direction generally from said other side toward said one side of said frame;

said front ends of said support arms being movable, by said displacing means, from a retracted position with respect to said frame to an outermost extended position with respect thereto, such movement from said retracted position to said extended position being in said forward direction;

supports coupled with said frame and movable with said support arms in a path generally parallel to said displacement path, said supports being disposed vertically below said front ends of said support arms and being in engagement with the support surface when said front ends of said support arms are in said outermost extended position;

said supports being formed by jibs extending from said frame generally in said forward direction but at a downward incline with respect thereto; and

a guide rail on said frame for guiding the movement of said jibs, said guide rail extending in a forward direction at a downward incline with respect to the horizontal.

4,373,855

TOOL CARRIER UNIT MOVABLE OVER A TUBE-PLATE

Bernard Lebouc, Dinan, France, assignor to Framatome, Courbevoie, France

Filed May 30, 1980, Ser. No. 154,864

Claims priority, application France, May 31, 1979, 79 14020

Int. Cl.^{3} F28G *15/08;* **B25S** *9/00*

U.S. Cl. 414—744 R **3 Claims**

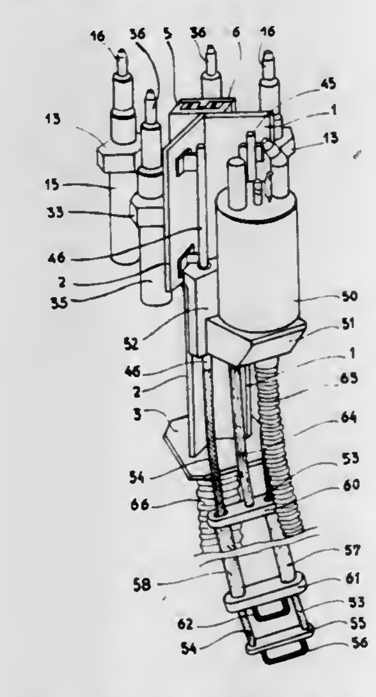

1. A tool carrier unit movable over a tube plate comprising:

(a) a supporting element in the form of an angle bracket defining a vee, the apex of said vee being, in use, perpendicular to said tube plate;

(b) two slides mounted on said supporting element;

(c) a carriage mounted on each slide for movement in a direction perpendicular to said tube plate;

(d) two perpendicular arms, each mounted on a respective said carriage for movement in a direction parallel to said tube plate;

(e) remotely controllable devices for engaging in holes in said tube plate mounted on said arms;

(f) independent remotely controllable means for moving each said arm on its respective carriage and each said carriage on its respective slide to enable said unit to be moved step by step across said tube plate, by successively engaging each of said arms with said tube plate and moving the other said arm while said one arm is engaged;

(g) said supporting element being provided, within the angle defined thereby, and unaffected by movement of said arms with guides for a tool; and

(h) means for moving said tool perpendicularly to said tube plate.

4,373,856

TIE BUTT HANDLER

Glenn E. Taylor, P.O. Box 53006, Atlanta, Ga. 30318

Continuation-in-part of Ser. No. 27,807, Apr. 6, 1979, abandoned, which is a continuation of Ser. No. 833,795, Mar. 6, 1978, abandoned, which is a continuation of Ser. No. 694,925, Jun. 11, 1976, Pat. No. 4,077,328. This application Oct. 2, 1979, Ser. No. 81,210

Int. Cl.^{3} B60P *1/54*

U.S. Cl. 414—470 **12 Claims**

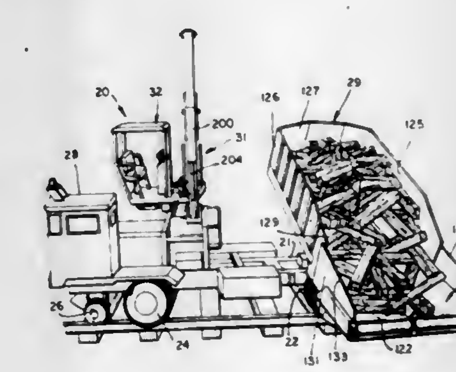

8. A load carrying vehicle comprising a vehicle framework, road wheels, means for mounting said road wheels on said vehicle framework for movably supporting said vehicle from a road surface, a dump body pivotally mounted on said vehicle framework about a first approximately horizontal axis and rotatably mounted on said vehicle framework about an approximately vertical axis, means for tipping said dump body from a down position upwardly about said horizontal axis and for rotating said dump body about said vertical axis, said dump body including a bottom pan and opposed sidewalls extending upwardly from said bottom pan and defining a rear opening for dumping its load, railroad wheels, retractable means for mounting said railroad wheels on said vehicle framework for lifting said railroad wheels with respect to said framework and for lowering said railroad wheels to engage the rails of a railroad track and supporting the vehicle on the rails of the railroad track, whereby the dump body is rotatable about is upwardly extending axis for guiding the load of the dump body out to the side of the rails of the railroad track when the dump body is tilted, a crane assembly mounted on said framework at a position adjacent the front wall of said dump body when said dump body is aligned with said framework, said crane assembly comprising a boom mounted at one of its ends on said framework and pivotable about an upright axis at its said one end with respect to said framework, a jib lever pivotably mounted at one of its ends to said boom, grasping means mounted at the other end of said jib lever, an operator's station on said framework at said crane assembly, and means for moving said one end of said boom and said operator's station from a position beyond one side to a position beyond the other side

of said framework which enables the said grasping means to retrieve objects next adjacent the vehicle when the vehicle is mounted on a railroad track.

4,373,857

METHOD FOR TRANSPORTING BULK FLUID OR PARTICULATE MATERIAL

William L. Giles, Des Moines, Iowa, assignor to Ruan, Incorporated, Des Moines, Iowa

Filed Jul. 14, 1980, Ser. No. 168,109

Int. Cl.³ B60P *3/07*

U.S. Cl. 414—786 **6 Claims**

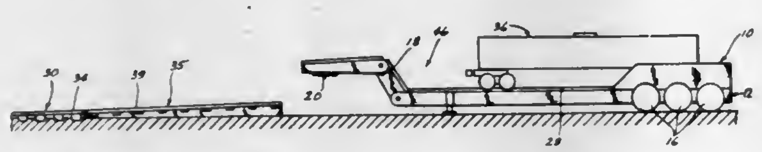

1. The method of transporting fluid or particulate material, comprising,
   - providing a truck-trailer unit including a wheeled frame means having a folding gooseneck apparatus at the forward end thereof and elongated track means extended over the substantial length of said frame means and gooseneck apparatus,
   - aligning said truck-trailer unit with a railroad track having a railroad car thereon,
   - folding said gooseneck apparatus to a substantially horizontally disposed position,
   - loading said railroad car onto the truck-trailer unit by rolling said railroad car from said railroad track onto said elongated track means of said substantially horizontally disposed gooseneck apparatus and onto said frame means rearwardly of said gooseneck apparatus,
   - folding said gooseneck apparatus to a normal position in a goose neck configuration,
   - connecting a prime mover to said normally positioned gooseneck apparatus,
   - transporting said railroad car over land by said truck-trailer unit to the source of said material,
   - loading said railroad car with said material while said railroad car is on said truck-trailer unit,
   - transporting said loaded railroad car over land to a rail terminal by said truck-trailer unit,
   - and unloading said loaded railroad car from said truck-trailer unit at said rail terminal for subsequent rail transportation.

4,373,858

FLOW REGULATING SHAFT SEAL FOR AN AIR MOTOR

James M. Eastman, South Bend, Ind., assignor to The Bendix Corporation, Southfield, Mich.

Filed Dec. 10, 1980, Ser. No. 214,902

Int. Cl.³ F01D *11/04*

U.S. Cl. 415—112 **7 Claims**

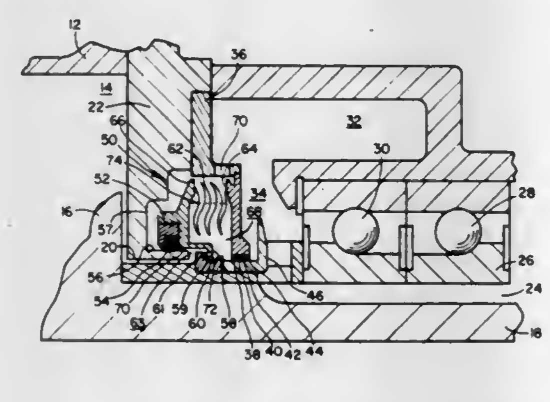

1. In a pneumatic motor having rotor means with shaft ends that extend through openings in a housing, said rotor means being moved by a supply of hot fluid under pressure to develop an output torque, said shaft ends having a predetermined clearance with said openings to allow for dimensional changes resulting from thermal differential expansion caused by the operational hot fluid, said predetermined clearance establishing flow paths through which hot fluid escapes into the surrounding environment, the improvement comprising:
   - valve means in each opening having a movable wall which surrounds said shaft end, each movable wall having a flange that extends into an adjacent flow path, a land on each shaft end, and resilient means connected to said housing for urging said movable wall toward said land, said hot fluid acting on said flange to produce an operational force which overcomes said resilient means and limits the flow of hot fluid to the surrounding environment through a variable orifice defined by the relationship between said flange and land to retain the hot fluid in the housing.

4,373,859

UNISON RING SUPPORT SYSTEM

Glenn W. Thebert, Carmel, Ind., assignor to General Motors Corporation, Detroit, Mich.

Filed Sep. 23, 1981, Ser. No. 304,963

Int. Cl.³ F01D *17/16*

U.S. Cl. 415—159 **3 Claims**

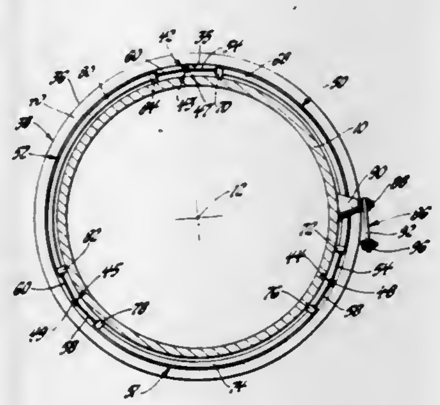

1. In a turbomachine having a casing and a stage of adjustable vane assemblies disposed on said casing, each of said vane assemblies including a vane rotatable on said casing and an actuator arm attached to said vane for unitary rotation therewith, the combination comprising, a rigid unison ring disposed in a transverse plane of said casing perpendicular to a longitudinal axis of said turbomachine, connecting means between said unison ring and each of said actuating arms operative to effect pivotal movement of said actuating arms and rotation of said vanes in unison with and in response to rotation of said unison ring about said longitudinal axis while permitting relative radial thermal growth between each of said actuating arms and said unison ring during temperature changes incident to operation of said turbomachine, a plurality of angularly spaced attachment nodes exceeding two in number on said unison ring, a corresponding plurality of push-pull elements capable of force transmission only lengthwise, each of said push-pull elements having a first end pivotally connected to one of said attachment nodes and a second end pivotally connected to the one of said attachment nodes to which said first end of the next succeeding push-pull element is attached, and a corresponding plurality of sheath members each slidably receiving a respective one of said push-pull elements and having rigid attachment at opposite ends to said casing, each of said sheath members directing said first and said second ends of a corresponding one of said push-pull elements generally tangent to a circle in said transverse plane about said longitudinal axis so that said plurality of push-pull elements resist displacement of said unison ring in said transverse plane from centered relationship about said longitudinal axis independently of said bearing means with net forces on said attachment nodes directed generally tangent to said circle.

4,373,860

SUBMERSIBLE HYDRAULIC PUMP OF THE AXIALLY DIRECTED INLET AND TANGENTIAL OUTLET TYPE

Albert H. Sloan, 4200 Kean Rd., Fort Lauderdale, Fla. 33314

Filed Dec. 24, 1980, Ser. No. 291,889

Int. Cl.³ F04D *1/00*

U.S. Cl. 415—185 **9 Claims**

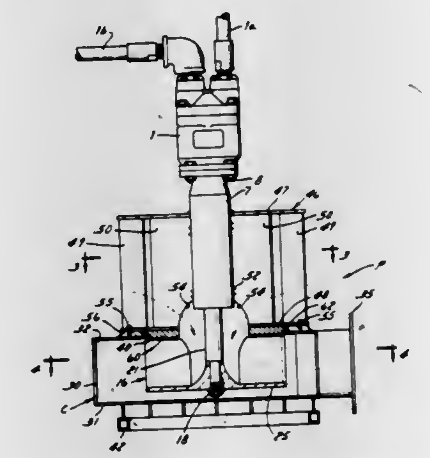

1. A submersible hydraulic pump assembly comprising a generally volute pump casing having two opposed sides, a fluid outlet extending generally tangentially from said pump casing, said casing having an axially central opening in one of said sides for the axial passage of water into said pump casing, a pump impeller located and rotatable in said casing and having a shaft fixed thereto and extending out of said casing through said central opening, a power source on said one of said sides of said pump casing and having a driving connection with said shaft for rotating said pump impeller to cause water to form as a vortex adjacent said one side and opening when said water flows into said central opening and thereby forms a central void of substantially no water pressure in said vortex, and bearing means for rotatably supporting said shaft, said bearing means mounted adjacent said one side and located outside of said casing and adjacent said central opening and in said void to prevent leakage of water into said bearing means.

4,373,861

AXIAL-FLOW FAN

Georg F. Papst; Siegfried Harmsen, both of St. Georgen, and Günter Wrobel, Villingen, all of Fed. Rep. of Germany, assignors to Papst-Motoren KG, Georgen, Fed. Rep. of Germany

Filed Apr. 16, 1980, Ser. No. 140,883

Claims priority, application Fed. Rep. of Germany, Oct. 6, 1979, 2940650

Int. Cl.³ F04D *25/08, 29/44*

U.S. Cl. 415—213 C **12 Claims**

1. An axial-flow fan comprising a fan wheel and a housing casing surrounding said fan wheel over at least substantially the entire axial length of said fan wheel, the fan wheel having a hub with a diameter which is at least half as large as the inner diameter of the housing casing wherein said housing casing is cylindrical in the axial central part and is broadened at least toward the exhaust side by way of corner pockets formed by essentially smooth walls into a square profile circumscribing the diameter of the fan wheel, said hub of the fan wheel being provided on the inlet side with an annular surface which extends approximately over one-third of the entire axial length of said hub and which has a conical configuration toward the end face.

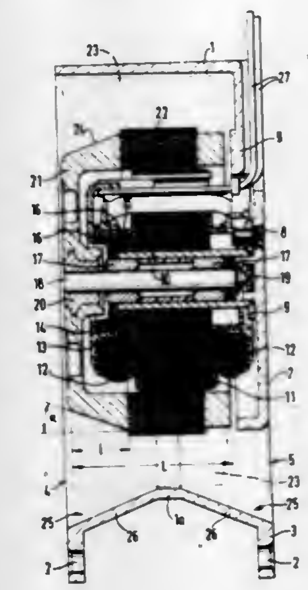

4,373,862

ROTOR BLADE SHAFT INTEGRITY MONITORING SYSTEM

Donald L. Ferris, Newtown, and Peter C. Ogle, Woodbridge, both of Conn., assignors to United Technologies Corporation, Hartford, Conn.

Filed Oct. 26, 1981, Ser. No. 315,125

Int. Cl.³ B64C *11/16, 27/48*

U.S. Cl. 416—61 **7 Claims**

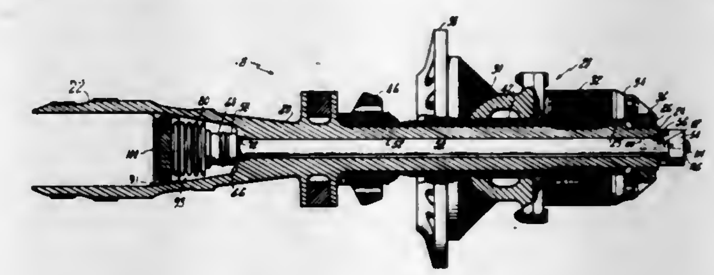

1. A helicopter rotor including a hub member mounted for rotation about an axis of rotation and having at least one hub arm and related helicopter blade projecting substantially radially therefrom for rotation therewith and an improved spindle assembly comprising:
   - a hollow spindle shaft extending radially from within the hub arm and outwardly therebeyond and having a radial inner end, a radial outer end and a central bore extending the full length of said shaft, said radial outer end shaped to define an enlarged chamber contiguous with the spindle bore and being adapted to be operatively connected to a helicopter blade,
   - bearing means operatively connecting the spindle shaft inner end to the hub arm and operative so as to support said spindle shaft and hence the blade from the hub so that blade centrifugal loading during rotor operation will be passed through said spindle shaft and said bearing means to said hub,
   - a thru-bolt extending through the spindle shaft bore for the full length thereof and having an inner end comprising a bolt head abutting said spindle inner end and having an outer end extending beyond the radially outer end of the shaft bore and into said spindle outer end enlarged chamber, said thru-bolt having an outer diameter selectively smaller than the spindle shaft bore so as to define a substantially annular chamber therebetween extending for substantially the full radial dimension of said bore,

means to operatively connect the thru-bolt outer end to the spindle shaft outer end to serve as a redundant centrifugal load path in the event of spindle shaft failure,
means to seal opposite ends of said annular chamber adjacent the radial inner and outer ends of the spindle bore, and
means to provide fluid dye under pressure into said sealed annular chamber so as to escape through any crack which might develop in the spindle shaft wall and then be aided by centrifugal force to flow along the outer surface of the spindle shaft to an area external of the hub arm for visual detection.

4,373,863
FEED CONTROL SYSTEM FOR PUMPING FLUIDS TO DISHWASHERS AND THE LIKE
William L. Mason, 24782 Calle Vinetos, El Toro, Calif. 92630, and William K. Russell, 2715 Sparrow Cir., Costa Mesa, Calif. 92626
Continuation-in-part of Ser. No. 14,041, Feb. 22, 1979, Pat. No. 4,242,051. This application Sep. 29, 1980, Ser. No. 191,710
Int. Cl.³ F04B *49/00, 49/02*
U.S. Cl. 417—12 **11 Claims**

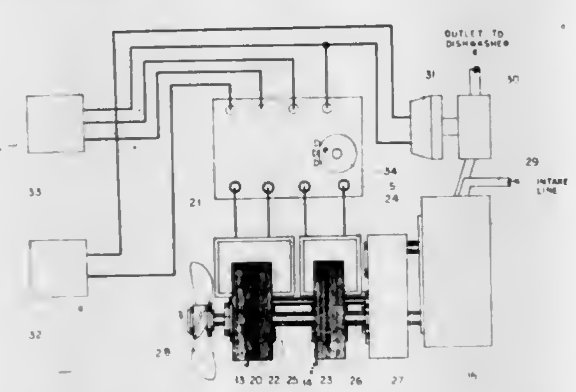

1. A feed control system for pumping fluids having linear shear rates and non linear shear rates, separately and to-gether, comprising:
a. a peristaltic pump for feeding detergent to the dishwasher;
b. an A.C. shaded pole motor for driving the pump, control for actuating the A.C. motor including:
I. a probe for determining concentration of the detergent; and,
II. a turn on circuit actuated by the probe, comprising:
i. an A.C. power supply;
ii. means for pre-setting the turn on circuit for response ta a specific detergent concentration;
iii. a turn on switch for admitting pulses from the probe;
iv. a first bilateral switch for turn on upon actuation by the power supply and pulses from the turn on switch;
v. solenoid means for turning on the dishwasher when the bilateral switch is turned on;
vi. detector means for converting signals from the bilateral switch to a pulse train;
vii. a clock counter for providing pulse signals;
viii. an adjustable timing counter set for correspondance to detergent feed time;
ix. gating means for receiving pulses from the detector means, clock counter and timing counter;
x. a second bilateral switch for turn on by the gating means and A.C. power supply when the probe indicates an excessive detergent feed time determined by setting of the timing counter;
xi. alarm means for actuation by the second bilateral switch;
c. a variable speed, D.C. powered shaded pole motor connected to the A.C. motor, and acting as an electromagnetic brake on the A.C. motor; and,
d. an A.C. to D.C. rectifier for supplying D.C. power to the variable speed motor;
the peristaltic pump being driven by the A.C. motor, whereby a decrease in viscosity of the fluid causes a decrease in rotational force to the constant torque motor and a counterbalancing increase in braking power of the variable speed motor, thereby linearizing the flow of fluid to the peristaltic pump.

4,373,864
SYSTEM FOR PUMPING FLUIDS AT CONSTANT PRESSURE
Lester G. Massey, Moreland Hills, Ohio; Robert I. Brabets, Lombard; William A. Abel, Joliet, both of Ill.; James K. Anderson, Gary, Ind.; Thomas J. Labus, Downers Grove, and Davis A. George, Park Forest, both of Ill., assignors to CNG Research Company, Cleveland, Ohio
Filed Mar. 6, 1980, Ser. No. 127,738
Int. Cl.³ F04B *49/00*
U.S. Cl. 417—46 **9 Claims**

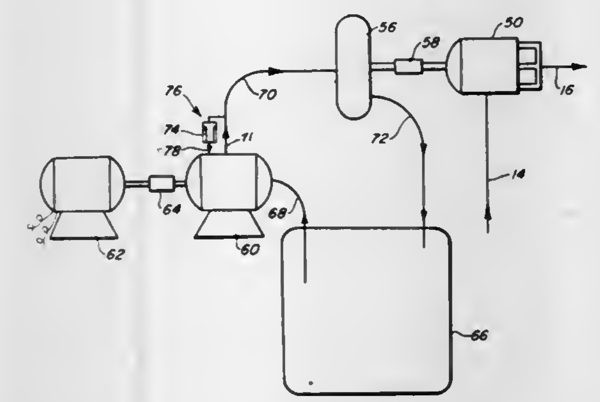

1. A pump system for pumping a first fluid at a substantially constant pressure regardless of fluid flow rate, said system comprising in combination:
(a) a pump for said first fluid, said pump having a first fluid inlet, a first fluid outlet and means for pumping the first fluid from the inlet through the outlet;
(b) a fluid motor for directly and mechanically driving the means for pumping; and
(c) adjustable means for driving the fluid motor, said adjustable means including means for sensing the relative pressure drop across the fluid motor and for adjusting the torque output of the fluid motor in inverse relationship to the pressure drop across the fluid motor such that the first fluid is pumped at a substantially constant pressure regardless of fluid flow rate.

4,373,865
RECIPROCATING CONTROLS OF A HYDRAULICALLY DRIVEN PISTON GAS COMPRESSOR
Tadeusz Budzich, 80 Murwood Dr., Moreland Hills, Ohio 44022
Filed Feb. 10, 1981, Ser. No. 233,219
Int. Cl.³ F04B *49/00, 3/00, 17/00*
U.S. Cl. 417—46 **6 Claims**

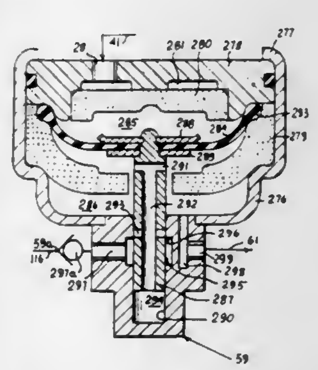

1. A compressor drive system comprising gas compression piston means provided with compressed gas outlet means, and hydraulic drive means operable to transmit a reciprocating motion to said gas compression piston means said hydraulic drive means having hydraulic piston means in sealing engagement with bore means defining first and second chambers, a pump having a discharge outlet, exhaust means, and control means operable to sequentially connect said first and said second chamber with said discharge outlet and said exhaust means at the end of each compression stroke said control means having means responsive to pressure in said discharge outlet and means responsive to pressure in said compressed gas outlet means, and gas pressure to hydraulic pressure signal translating means interposed between said compressed gas outlet means and said control means and having hydraulic fluid replenishing means communicable with said discharge outlet.

4,373,866
PROCESS TO CONTROL THE DELIVERY OF A SINGLE SCREW COMPRESSOR
Bernard Zimmern, Neuilly sur Seine, France, assignor to Uniscrew Limited, Hamilton, Bermuda
Filed Jun. 10, 1980, Ser. No. 158,074
Claims priority, application France, Jun. 18, 1979, 79 15484
Int. Cl.³ F04B *49/02;* **F04C** *18/00, 23/00, 29/10*
U.S. Cl. 417—53 **3 Claims**

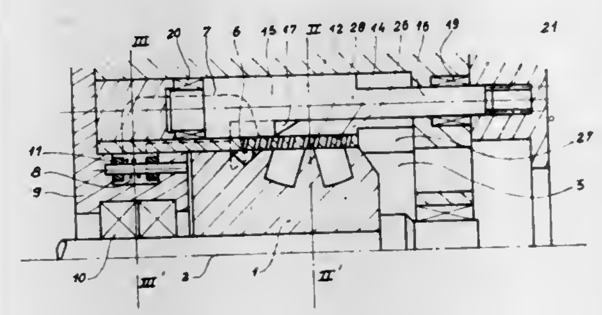

1. A process to control the delivery of single screw compressors or expansion machines of the type including a screw co-operating with at least two pinion wheels and rotatable inside a casing provided with at least one low pressure orifice and with high pressure orifices located near said pinion wheels, at least one channel to connect the high pressure orifice pertaining to one of the pinion wheels, called first pinion, and the low pressure orifice, such channel being provided with an obturating means, auxiliary orifices arranged in the casing connecting the various zones of the casing exposed to pressure with the low pressure orifice, said auxiliary orifices being provided with obturating devices, such process comprising sequentially opening these orifices to diminish the delivered volume, starting from the orifices located at the lowest pressure and progressing towards the orifices at the higher pressure, the process including the hierarchy of steps wherein, in order to reduce the delivery of the compressor or expansion machine from a maximum delivery, the auxiliary orifices pertaining to the first pinion are first sequentially opened; if then the measured delivery is still too high the device obturating the channel connecting the high pressure orifice of the first pinion and the low pressure orifice is opened secondly; and if then the delivery obtained is still too high the auxiliary orifices pertaining to the second pinion are finally sequentially opened.

4,373,867
PRESSURE CHARGED AIRLIFT PUMP
Gene K. Campbell, Las Vegas, Nev., assignor to The United States of America as represented by the United States Department of Energy, Washington, D.C.
Filed Aug. 15, 1980, Ser. No. 178,653
Int. Cl.³ F04B *23/08, 45/06;* **F04F** *1/20*
U.S. Cl. 417—90 **3 Claims**

1. A compressed gas operated pumping subassembly for attachment onto the end of a dual string drill pipe string having first and second parallel extending concentric conduits, said subassembly capable of removing water, mud and rock bits of moderate size from an underground cavity, said subassembly comprising:
(a) An upper portion having means for connecting the subassembly directly onto the end of the pipe string and extending said first and second conduits, terminating the end of said first conduit in a plenum;
(b) A compressed gas operated diaphragm pump suspended from said upper portion;
(c) A third conduit connecting the discharge of said pump with said second parallel extending conduit for fluid flow thereinto, said second and third conduits presenting essen-

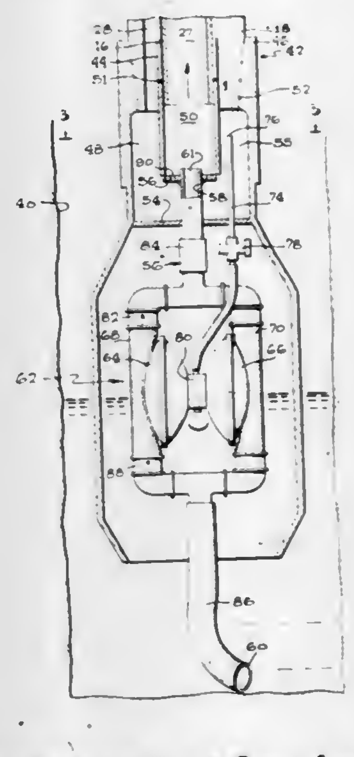

tially no obstruction to the flow of mud and rock bits of moderate size therethrough;
(d) A fourth conduit connecting said plenum to the pump operator for delivering pressurized gas thereto; and
(e) Fifth conduit means connecting said plenum with said second parallel extending conduit whereby compressed gas delivered to said plenum through said first parallel extending conduit operates said pump and aerates the discharge from said pump in said second conduit thereby facilitating the flow of said discharge to the earth's surface.

4,373,868
DIFFUSION PUMP FOR LEAK DETECTOR
Arthur A. Landfors, Newton, Mass., assignor to Varian Associates, Inc., Palo Alto, Calif.
Continuation-in-part of Ser. No. 702,654, Jul. 6, 1976, Pat. No. 4,140,438. This application Jan. 17, 1978, Ser. No. 870,234
Int. Cl.³ F04F *9/00*
U.S. Cl. 417—154 **6 Claims**

1. A diffusion pump comprising a body assembly including a cool wall having a longitudinal, centrally located axis, a cylindrical heater for establishing a cylindrical radial thermal gradient, said heater comprising a heating wall coaxial with the body assembly and surrounding a pool of liquid that the heater causes to boil changing its state to vapor, a jet assembly coaxial with the body assembly, means for providing a flow path for the vapor from the surface of the pool to the jet assembly, the jet assembly inducing at least one annular nozzle concentric with the axis for directing the vapor downwardly against the cool wall, the cool wall condensing the vapor striking it into a liquid that flows downwardly along the body assembly toward the pool, and means for providing a flow path for the con-

densed liquid directly from the body assembly to a region substantially at the bottom of the pool and on the axis so that

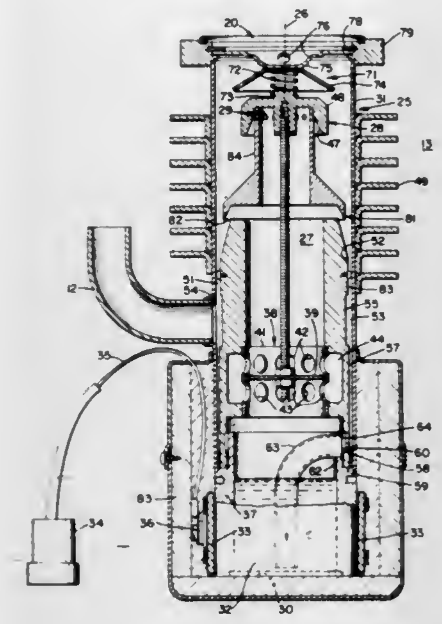

the condensed liquid flows outwardly and upwardly from the bottom of the pool and the axis.

4,373,869

WARM-UP VALVE IN A VARIABLE DISPLACEMENT SYSTEM

Robert J. Martin, Hutchinson; Loren L. Alderson, Nickerson, and Jerry F. Carlin, Hutchinson, all of Kans., assignors to The Cessna Aircraft Company, Wichita, Kans.

Filed Aug. 22, 1980, Ser. No. 180,550

Int. Cl.³ F04B *49/08*

U.S. Cl. 417—213 **11 Claims**

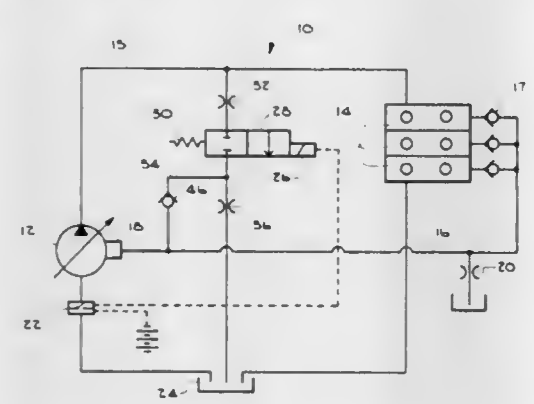

1. A warm-up valve in a system having a variable displacement pressure and flow compensated pump supplying at least one function through at least one directional control valve with a signal sensing line from the control valve to the compensator on the pump, the warm-up valve comprising:

a temperature-actuated servo means sensing the system reservoir temperature;

a valve means positioned in a line connecting the pump discharge to reservoir, said means being actuated by said servo means having a spool which in its first position opens the pump discharge to the pump compensator and allows a controlled amount of the pump capacity to return to reservoir;

the valve spool having a second position, when actuated by the servo means, which blocks the pump discharge to the pump compensator and to reservoir.

4,373,870

VARIABLE CAPACITY POSITIVE DISPLACEMENT TYPE COMPRESSOR

Richard T. Pandzik, Dayton, Ohio, assignor to General Motors Corporation, Detroit, Mich.

Filed Jul. 17, 1980, Ser. No. 169,598

Int. Cl.³ F04B *1/18, 39/10, 49/02*

U.S. Cl. 417—269 **3 Claims**

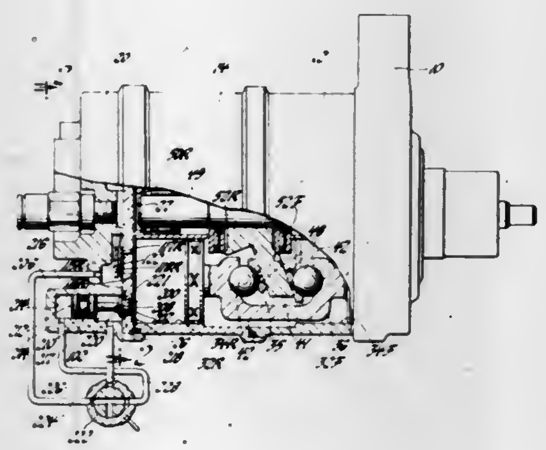

1. In a variable capacity compressor of the positive displacement type having one or more compression chambers each with a suction valve and further having a variable pumping capacity control arrangement wherein the pumping capacity is varied by effecting communication between the compressor's suction side and one or more of the compression chambers during compression: an improved variable capacity control arrangement comprising in combination, a bypass passage connected in parallel with at least one of the suction valves between the fluid supply and the respective compression chamber, bypass valve means operable to open and close said bypass passage, said bypass valve means having a first pressure responsive area acted on by fluid pressure direct from the associated compression chamber through said bypass passage whereby said bypass valve means is urged thereby to open said bypass passage, said bypass valve means further having a second pressure responsive area substantially larger than and facing in a direction opposed to said first pressure responsive area, and control means for alternately communicating said second pressure responsive area with either the suction side in a reduced capacity demand condition or the discharge pressure from the compression chamber to which said bypass passage is connected in a normal capacity demand condition whereby in said reduced capacity demand condition the force exerted on said bypass valve means during compression by the compression chamber pressure acting on said first pressure responsive area substantially exceeds the force exerted by the suction pressure acting on said second pressure responsive area so that said bypass valve means is moved by such force imbalance and thereafter maintained to open said bypass passage and unload the compression chamber to which the bypass passage is connected and, alternatively, in said normal capacity demand condition the force exerted on said bypass valve means by the discharge pressure acting on said second pressure responsive area remains greater than the force exerted by the pressure in the compression chamber acting on said first pressure responsive area so that said bypass valve means is moved by such force imbalance and thereafter maintained to close said bypass passage to establish and maintain the normal pumping capacity of the compression chamber to which the bypass passage is connected except upon compressor start-up whereupon said bypass valve means is moved by a transient force imbalance thereon to momentarily open said bypass passage and unload the connected compression chamber and thereby reduce start-up torque.

4,373,871

COMPACT POWER STEERING PUMP

John H. Christ, Saginaw, Mich., assignor to General Motors Corporation, Detroit, Mich.

Filed May 4, 1981, Ser. No. 260,015

Int. Cl.³ F04B *49/08;* **F01C** *19/08*

U.S. Cl. 417—310 **2 Claims**

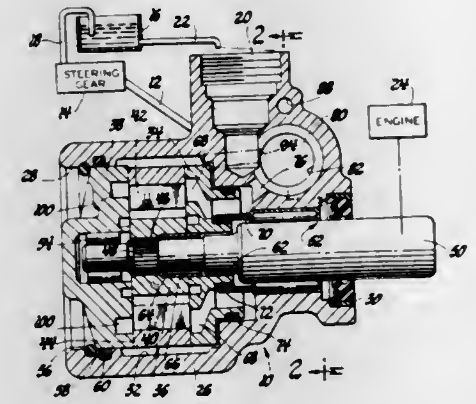

1. A vane type power steering pump comprising a substantially cylindrical housing having a shaft opening at one end and a larger opening at the other end; a shaft extending through said shaft opening and being rotatably supported adjacent one end in said housing; a pressure plate sealingly engaging said housing and being disposed circumjacent said shaft; a vane pump assembly means disposed in said housing axially adjacent said pressure plate and toward the larger opening and having a rotor being drivingly connected with said shaft; a thrust plate disposed axially adjacent said assembly and rotatably supporting the other end of said shaft, said thrust plate sealingly engaging with said housing and cooperating therewith to close the larger opening; locking ring means engaging said housing and said thrust plate to limit the axial movement of the thrust plate in one direction; fluid inlet means formed in said thrust plate for communicating fluid to said assembly; fluid outlet means in said pressure plate for delivering fluid from said assembly; pressure space means formed by said housing and said pressure plate and having a cross-sectional area less than the total cross-sectional area of said pressure plate, said pressure space means being in communication with said fluid outlet means and cooperating with said pressure plate to create an axial pressure loading on said pressure plate in the direction of said assembly and thrust plate to urge said pressure plate, said assembly and said thrust plate against said locking ring means; fluid flow control valve means disposed in said housing transverse to said shaft and having respective portions in communication with said fluid outlet means and said fluid inlet means; and fluid outlet and fluid inlet port means for respectively directing fluid from said pump and delivering fluid to said pump.

4,373,872

NOISE DAMPING DEVICE

Ulrich Kemmner, Sachsenheim; Peter Ringwald, Rutesheim; Hans-Ulrich Mütschele, and Rainer Schillinger, both of Stuttgart, all of Fed. Rep. of Germany, assignors to Robert Bosch GmbH, Stuttgart, Fed. Rep. of Germany

Filed Jun. 26, 1980, Ser. No. 163,119

Claims priority, application Fed. Rep. of Germany, Aug. 22, 1979, 2933912

Int. Cl.³ F04B *11/00;* **F16L** *55/04*

U.S. Cl. 417—312 **7 Claims**

1. A noise damping device, which is disposed in a pressurized fluid supply system intermediate an outlet of a fluid supply pump and a pressure line and which is threadingly connected at the pump outlet with an internally threaded compression collar of the pump, for smoothing and reducing pressure fluctuations occuring in the pump, the noise damping device having an axis and comprising:

a diaphragm fluctuation damper including a damper housing and a diaphragm which is disposed within the damper housing and which defines, together with the damper housing, a damping chamber;

a connection extension for connecting the diaphragm fluctuation damper to the pump, having an externally threaded first end which is screwed into the internally threaded pump compression collar and having an opposite second end, the connection extension defining an axial passageway extending between its first and second ends and connecting the pump outlet to the damping chamber;

an annular fitting having an annular-shaped first end through which the connection extension extends and a second end connected to the pressure line, the fitting defining an inner annular groove extending about the connection extension and a flow channel extending from the annular groove to the pressure line;

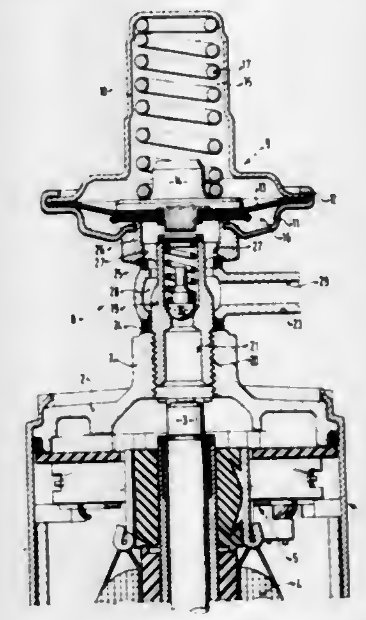

first and second sealing rings, which extend about the connection extension and which are disposed on one side of the fitting annular-shaped first end facing the damper housing and on an opposite side of the fitting annular-shaped first end facing the pump compression collar respectively; and

a second passageway, which is defined by the connection extension, the fitting annular-shaped first end, the first sealing ring, and the damper housing, and which extends between the damping chamber and the annular groove;

the damper housing being connected to the second end of the connection extension such that rotation of the damper housing about the device axis produces an axial displacement of the damper housing relative to the pump outlet, whereby the annular fitting is fixed in an axial position between the first and second sealing rings by twisting the damper housing in one direction of rotation.

4,373,873

HYDROSTATIC AND OIL WELL PUMP

William M. Kofahl, Rte. 2, Box 297, Licking, Mo. 65542

Filed May 4, 1981, Ser. No. 259,837

Int. Cl.³ F04B *35/02, 17/00*

U.S. Cl. 417—339 **11 Claims**

1. A pump for pumping a fluid from a first elevation to a second elevation, comprising:

first and second pumping strings extending adjacent the first elevation for carrying a pumping fluid;

an upstroke cylinder slidably mounted on said first pumping string for reciprocating motion between retracted and extended positions;

a downstroke cylinder slidably mounted on said second pumping string for reciprocating motion between retracted and extended positions;

a return string extending from the first to the second elevations, said return string having an upper and a lower section interconnected by a one-way valve means for

permitting fluid to flow only from the lower to the upper section;

a pump barrel slidably mounted on said return string for reciprocating motion between extended and retracted positions, said pump barrel and lower section of said return string defining a pumping chamber therebetween varying in volume as said pump barrel moves between the extended and retracted positions, the fluid at the first elevation being permitted to enter the pumping chamber to equalize the fluid pressure therebetween; and

cable means secured between said upstroke and downstroke cylinders, and said pump barrel and engaging sheave means supported in a fixed relation to said return string,

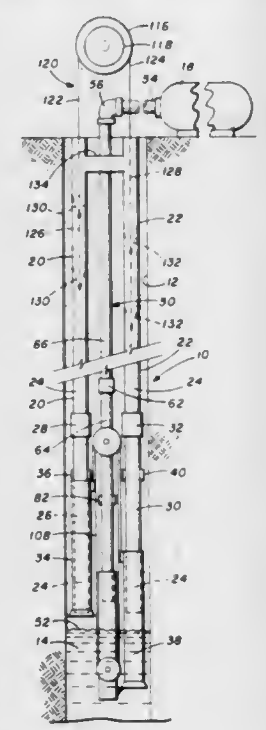

the entry of pumping fluid into said first pumping string at a predetermined pressure urging said upstroke cylinder to the extended position and tensioning said cable means to urge said downstroke cylinder and said pump barrel to the retracted positions, pumping the fluid in the pumping chamber into the upper section of said return string, the entry of pumping fluid at the predetermined pressure into said second pumping string urging said downstroke cylinder to the extended position and tensioning said cable means to urge said upstroke cylinder to the retracted position, said downstroke cylinder and pump barrel having cooperating lug means so that said pump barrel is urged to the extended position by said downstroke cylinder.

4,373,874
FLUID ACTUATED PUMP SYSTEM
Albert Phillips, 465 Kiwanis Ave., Morgantown, W. Va. 26505
Continuation of Ser. No. 62,247, Jul. 30, 1979, abandoned. This application Jul. 6, 1981, Ser. No. 280,333
Int. Cl.³ F04B *17/00*
U.S. Cl. 417—397 **6 Claims**

1. A control valve comprising,

a unitary valve housing having a bore extending therethrough,

a plurality of fluid inlet and outlet ports extending through said valve housing and communicating with said bore,

a rotatable unitary valve member positioned in said bore,

bearing means for rotatably supporting said unitary valve member in said bore,

said unitary valve member having a plurality of inlet ports and a plurality of outlet ports,

a plurality of internal passages in said unitary valve member for connecting in pairs said inlets with said outlets,

timing means for rotating said unitary valve member at a preselected rate,

said timing means being fluid actuated and including a pair of timing gears positioned in meshing relation in a fluid chamber with one of said timing gears being nonrotatably connected to said unitary valve member so that rotation of said meshing gears rotates said unitary valve member at a preselected rate,

said fluid chamber having an inlet for receiving fluid under pressure from a source and an outlet for conveying fluid under pressure to said unitary valve member such that flow of fluid under pressure from said inlet through said fluid chamber to said outlet rotates said timing gears to rotate said unitary valve member and to convey fluid to said unitary valve member,

said timing gears being rotatable by said fluid flow at a preselected rate to displace a preselected volume of fluid under pressure to control the volume of fluid being conveyed to said unitary valve member,

a fluid circuit connecting said timing gears to a source of fluid and to said unitary valve member for controlling the flow of fluid from the source through said timing means to said unitary valve member,

said fluid circuit including a pilot valve and an operator controllable valve means,

said pilot valve being positioned in said fluid circuit between the fluid source and said timing means and operable to

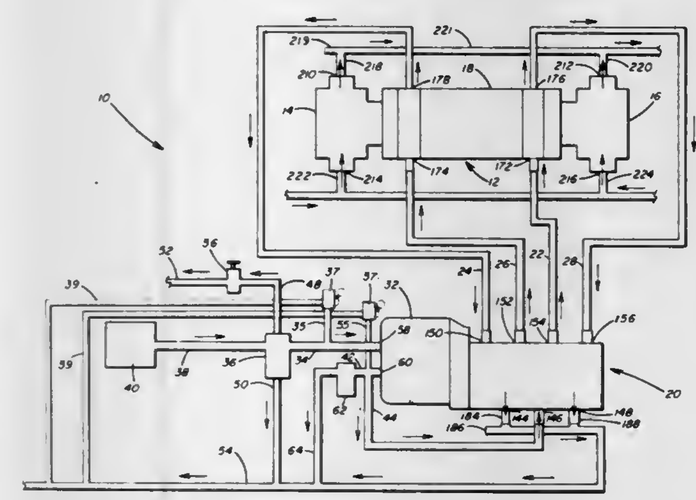

control the volume of fluid entering said timing means and thereby control the rate of rotation of said timing gears by normally diverting fluid away from said timing means and directing fluid flow from the source to a fluid reservoir,

said operator controllable valve means being positioned in fluid communication with said pilot valve for actuating said pilot valve to direct fluid flow to said timing means and control the volume of fluid conveyed by said timing means to said unitary valve member,

said unitary valve member being arranged upon each revolution thereof to rotate between a first valve position and a second valve position,

a first set of said valve member inlet and outlet ports in said first valve position being positioned in communication with a first set of said valve housing inlet and outlet ports for directing a preselected volume of fluid upon rotation of said timing gears through said unitary valve member and said valve housing in a first flow pattern, and

a second set of said valve member inlet and outlet ports in said second valve position being positioned in communication with a second set of said valve housing inlet and outlet ports for directing a preselected volume of fluid upon rotation of said timing gears through said unitary valve member and said valve housing in a second flow pattern.

4,373,875
VISCOUS MATERIAL PUMP, IN PARTICULAR FOR THE CONVEYANCE OF CONCRETE
Friedrich Schwing, Herne, Fed. Rep. of Germany, assignor to Friedrich Wilh. Schwing GmbH, Herne, Fed. Rep. of Germany
Filed Aug. 8, 1980, Ser. No. 176,283
Claims priority, application Fed. Rep. of Germany, Aug. 16, 1979, 2933128
Int. Cl.³ F04B *15/02*
U.S. Cl. 417—517 **5 Claims**

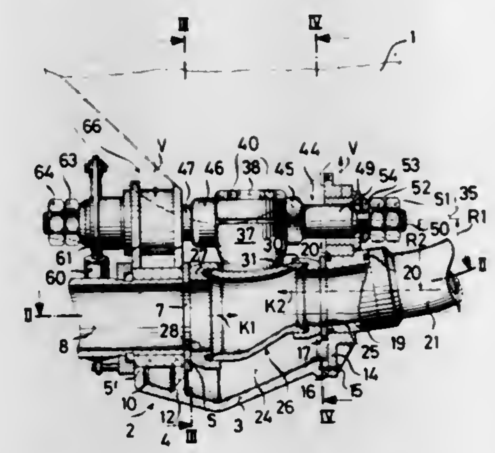

1. A viscous material pump comprising:

a housing (3) receiving the viscous material to be pumped, said housing having a wall containing a conduit opening by which the viscous material is passed from the pump and an opposing wall containing a pair of cylinder openings;

a swivel body (26) having a material passage extending between a discharge opening (32) and an inlet opening (28), the area (A_2) of said discharge opening (32) being of a different size than the area (A_1) of said inlet opening, said swivel body being movably positioned in said housing intermediate said opposing walls for alternately connecting the cylinder openings with the conduit opening; and

a swivel shaft (44) from which said swivel body extends, said swivel shaft being mounted on said housing for moving said swivel body about an axis of rotation (35) extending generally in the direction of the swivel body passage, said discharge and inlet openings of said swivel body being radially displaced from the axis of rotation such that the product of the area (A_2) of the discharge opening (32) and the displacement (R_2) of the center of gravity of that area from the axis of rotation is similar to the product of the area (A_1) of the inlet opening (28) and the displacement (R_1) of the center of gravity of that area from the axis of rotation.

4,373,876
DOUBLE-ACTING PISTON COMPRESSOR
Akira Nemoto, Toyohashi, Japan, assignor to Musashi Seimitsu Kogyo Kabushiki Kaisha, Aichi, Japan
Filed Jun. 20, 1980, Ser. No. 161,258
Claims priority, application Japan, Mar. 21, 1980, 55-36645
Int. Cl.³ F04B *39/00, 39/10*
U.S. Cl. 417—534 **5 Claims**

1. An easy-to-assemble, positive-displacement, double-acting compressor comprising:

(a) a housing defining a pair of parallel cylinder chambers laterally open to each other, the housing having a pair of openings formed in its opposite ends;

(b) a pair of double-headed pistons reciprocably mounted one in each cylinder chamber, each piston having four side columns extending between two piston heads to form through the piston a first and a second passage arranged crosswise with respect to each other and both extending normal to the axis of the piston;

(c) a crankshaft rotatably mounted in the housing and extending through the first passages in the pistons, the crankshaft comprising a pair of journals at opposite ends thereof, a pair of cranks spaced inboard from the journals, and a pair of outer shaft portions each extending between one of the journals and the adjacent one of the cranks;

(d) a pair of sliders each rotatably fitted over one of the cranks and each reciprocably mounted in the second passage in one of the pistons, the sliders being effective to translate the rotation of the crankshaft into linear reciprocation of the pistons, at least one of said sliders being fitted over one of the cranks, after the pistons are inserted in the respective cylinder chambers and then the crankshaft is passed through the first passages in the pistons to a position at which the crank is in register with the pistons, by inserting the slider into the housing through the opening thereof so as to cause it to lie over the outer shaft portion of the crankshaft and then shifting the slider axially of the crankshaft into the second passage of the piston and onto the crank;

(e) a pair of valve seats closing the opposite ends of the cylinder chambers to define fluid compression chambers between the valve seats and the piston heads;

(f) means forming fluid intake chambers from which fluid is supplied into the fluid compression chambers to be compressed therein; and

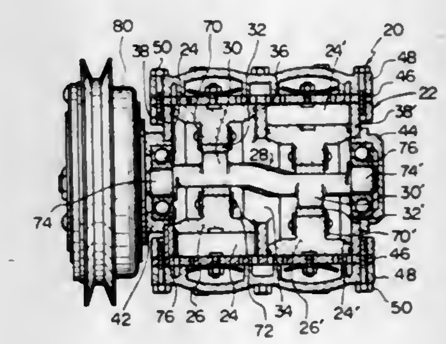

(g) means forming fluid discharge chambers outside the valve seats, into which discharge chambers compressed fluid is supplied from the associated compression chambers;

(h) there being the following dimensional relations between the sliders and the other parts of the compressor:

$$A>B,\ C>D,\ E\geqq F, \text{ and } G>H$$

wherein

A. is the diameter of each of the openings in the opposite ends of the housing,

B. is the maximum dimension of each slider as measured in a plane normal to its axis,

C. is the dimension of the first passage in each piston as measured in the direction of movement of each slider along the second passage in the piston,

D. is the maximum dimension of each slider as measured in the direction of its movement along the second passage in each piston,

E. is the dimension of the first and second passages in each piston as measured in the axial direction of the piston,

F. is the dimension of each slider as measured in the axial direction of each piston,

G. is the axial dimension of each outer shaft portion of the crankshaft, and

H. is the axial dimension of each slider.

4,373,877
PUMP WITH ROTATABLE RESERVOIR CASING AND INDEX MEANS
Arthur K. Brown, South Bend, Ind., assignor to The Bendix Corporation, Southfield, Mich.
Filed Sep. 15, 1980, Ser. No. 186,940
Int. Cl.[3] F04C *15/00;* **B65D** *45/04;* **F16B** *2/20*
U.S. Cl. 418—2 **1 Claim**

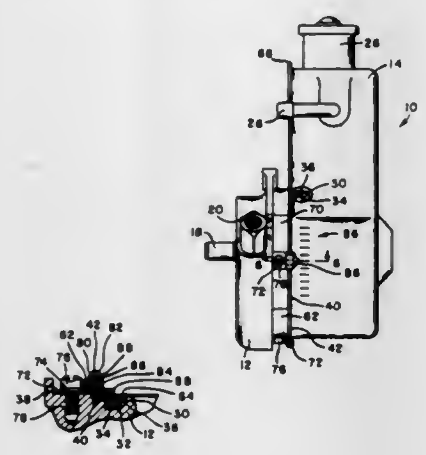

1. In a fluid pump of the type having a body including:
a casing portion defining a fluid reservoir therein and defining a circular opening leading to said reservoir;
a pump housing portion rotatably received in said reservoir and closing said opening;
means for effecting a fluid-tight seal between said body portions; and
means for connecting said body portions; characterized in that said casing portion includes a lip circumscribing at least a part of said opening, said connecting means including a clip having a first part which is U-shaped in cross-section and receiving said lip and a second part extending from said first part, said second part cooperating with said pump housing portion to maintain a selected relative rotational position between said body portions, said casing portion defines a plurality of circumferentially-arranged indicia and said connecting means defines an index so that said selected relative rotational position of said body portions is defined by aligning said index relative said indicia, and said index is defined by said U-shaped first part.

4,373,878
SYNCHRONIZED HYDRAULIC ROTARY CONVERTER AND DISTRIBUTOR DEVICE
Gaston Sauvaget, 6, Allee de l'Oseraie, F-94260 Fresnes, France
Filed Feb. 21, 1980, Ser. No. 123,179
Claims priority, application France, Feb. 22, 1979, 79 04530
Int. Cl.[3] F03C *2/00*
U.S. Cl. 418—23 **14 Claims**

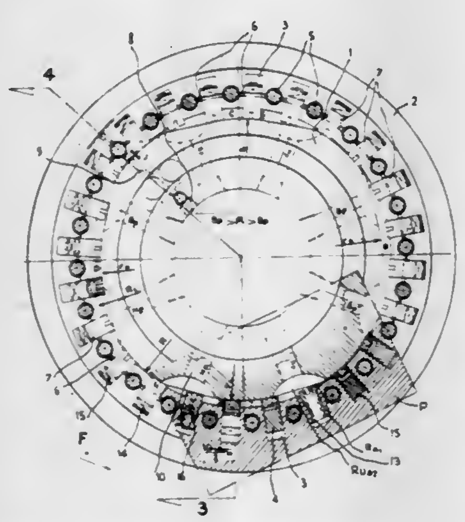

1. In a hydraulic converter distributor device, intended to transform a hydraulic energy into kinetic energy or rotation or vice versa, having a hub stator, said hub stator having an inside diameter of at least 0.5 meter, a rotor in which are radially oriented equidistant grooves, a respective valve received in each of the grooves each of said valve having a lower face which moves on a periphery of the stator and which includes recesses defining swept volumes, conduits coming out in the swept volumes, the valves receiving thrust of drive fluid regulated externally, assuring driving in rotation of the rotor by successively moving in the swept volumes of the stator, and two side flanges mounted on bearings and solid with the rotor closing the device in a fluid-tight manner, the improvement wherein said rotor, said stator and said flanges are of annular shape and constitute a tore of substantially rectangular section of which an average radius of said swept volumes amounts to up to about several meters and whose number is a function of length of the average circumference at magnitude of said average radius total volume of said swept volumes amounting to up to about several hundred liters, and including means for delivering constant drive fluid while allowing for changes of speeds, a 15% variation more or less, means for controlling separately intake of the drive fluid for each of said swept volumes or diametrically opposite pairs of said swept volumes, and means for making at least one of said swept volumes inactive by selective fluid delivery, and wherein said valves are double-acting to both control putting them into action directly by only the pressure of fluid in the active said swept volumes or else recall them to respective bottoms of their housing by a differential pressure (Pi) or adjustable case pressure as a function of needs and putting into operation by an external distributor, idling of said rotor being obtained by making all said swept volumes inactive, and said swept volumes having different depths to thereby define a ratio of the decreasing volume of swept volumes to thereby increase the number of speed ratios available.

4,373,879
ALTERNATING ROTOR MOTOR WITH SPRING CLUTCHES
Rudolf P. Picavet, 2629 Jane St., Downsview, Ontario, Canada
Filed Oct. 26, 1981, Ser. No. 314,758
Int. Cl.[3] F01C *1/063;* **F02B** *53/00*
U.S. Cl. 418—35 **9 Claims**

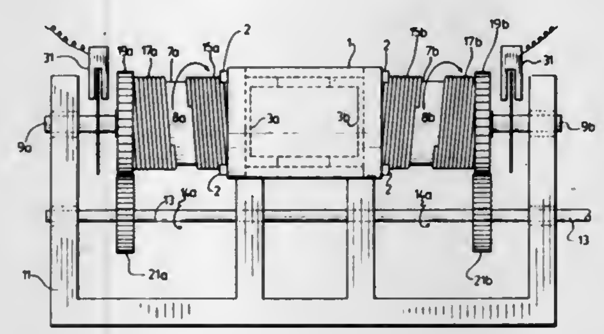

1. A rotary motor comprising a housing, first and second coaxial opposing rotors rotatable within said housing, first and second rotor shafts on which said first and second rotors are mounted respectively, a closed annular rotor chamber which is divided into power, exhaust, intake and compression regions by said rotors, ignition means for fuel combustion in the power region of said annular chamber for rotor rotation, a torque receiving shaft alternately driven by said first and second rotor shafts, a first anti-reversing spring clutch wound on said first rotor shaft and arranged to bind on said first rotor shaft for substantially preventing rotation in a first direction while allowing rotation of said first rotor shaft in a second direction opposite to said first direction, a first movable spring clutch wound around and adapted to bind on and rotate with said first rotor shaft when rotating in said second direction, a second anti-reversing spring clutch wound on said second rotor shaft and arranged to bind on said second rotor shaft for substantially preventing rotation in said first direction while allowing rotation of said second rotor shaft in said second direction, a second movable spring clutch wound around and adapted to bind on and rotate with said second rotor shaft when rotating in said second direction and drive means connecting said first and second movable spring clutches to said torque receiving shaft; said first and second rotors being adapted to alternately rotate in said second direction with said movable spring clutches providing, in turn, drive through each rotor shaft when rotating to said torque receiving shaft and providing slippage around each rotor shaft when each rotor shaft is prevented from rotating thereby enabling alternating rotation of said rotors.

4,373,880
THROUGH-VANE TYPE ROTARY COMPRESSOR WITH CYLINDER CHAMBER OF IMPROVED SHAPE
Taro Tanaka, Nagoya; Hideaki Sasaya, and Mitsuo Inagaki, both of Okazaki, all of Japan, assignors to Nippon Soken, Inc., Nishio, Japan
Filed May 4, 1981, Ser. No. 260,210
Int. Cl.[3] F04C *18/00*
U.S. Cl. 418—150 **3 Claims**

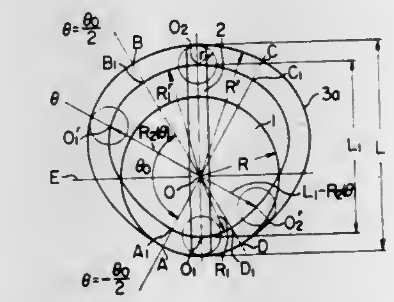

1. A through-vane type rotary compressor comprising:
housing means having a cylinder chamber therein;
a fluid inlet port and a fluid outlet port opening in said cylinder chamber;
a cylinder rotor eccentrically supported in said cylinder chamber; and
a slider slidably extending through the center of rotation of said rotor having opposite ends maintained in sliding contact with a peripheral edge of said cylinder chamber;
wherein the improvement resides in that:
the peripheral edge of said cylinder chamber is shaped such that it includes a first segment of a predetermined angle interposed between said fluid inlet port and said fluid outlet port, said first segment being circularly arcuate in shape with a radius R where R is the radius of the rotor, a second segment disposed symmetrically with said first segment with respect to the center of rotation of the rotor, said second segment being circularly arcuate in shape with a radius $R' = L - R$ where L is the length of the slider, and a third segment connecting said first segment and said second segment together, said third segment having a shape represented by the formula:

$$R_2(\theta) = \frac{L}{2} + \frac{R' - R}{\theta_o}\left(\theta + \frac{\theta_o}{2\pi}\sin\frac{2\pi\theta}{\theta_o}\right)$$

where θ_o in the angle of a segment having the third segment as an arc.

4,373,881
WORM-TYPE ROTARY FLUID COMPRESSOR
Yoshio Matsushita, Kawasaki, Japan, assignor to Iwata Air Compressor Manufacturing Company Ltd., Tokyo, Japan
Filed Jul. 7, 1980, Ser. No. 166,073
Claims priority, application Japan, Jul. 9, 1979, 54-85858
Int. Cl.[3] F04C *18/12, 23/00*
U.S. Cl. 418—195 **4 Claims**

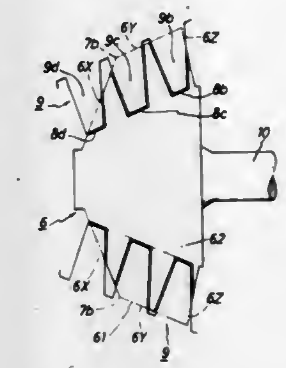

1. A rotary fluid compressor of the type having a worm sealingly interengaging pinion teeth of at least one pinion, comprising:
said worm including a plurality of spiral teeth, said spiral teeth having an outer profile;
adjacent pairs of said spiral teeth defining a groove therebetween, said groove having a bottom groove line;
a cross section of said bottom groove line having a uniform taper from a fluid suction end to a fluid discharge end of said worm;
a cross section of said spiral teeth including a first tapered portion beginning at said suction end and a second tapered portion contiguous to said first tapered portion and ending at said discharge end;
said first tapered portion having an outer profile substantially parallel to said uniform taper whereby a portion of said spiral teeth bounded by said bottom groove line and said first tapered portion have a uniform height;
said second tapered portion being more sharply tapered than said uniform taper whereby a height of said teeth decreases toward said discharge end; and
a casing generally conforming to said first and second tapered portions for sealing said fluid in at least a portion of said grooves.

4,373,882
DISCHARGE VALVE ASSEMBLY FOR COMPRESSOR
William T. Ladusaw, Louisville, Ky., assignor to General Electric Company, Louisville, Ky.
Filed Jan. 30, 1981, Ser. No. 229,909
Int. Cl.[3] F01C *21/00;* **F16K** *15/16*
U.S. Cl. 418—270 **8 Claims**

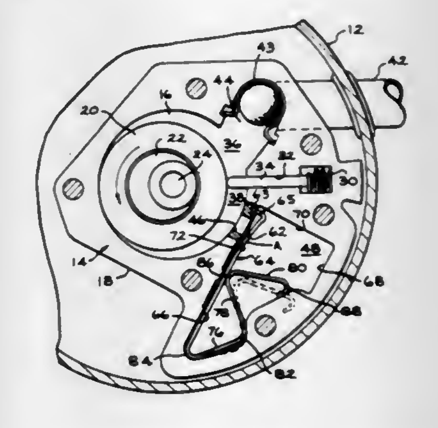

1. In a rotary compressor, a central compressor body element including a cylindrical wall member and upper and lower end plate members defining an annular compression chamber

for receiving a charge of refrigerant, a high pressure discharge port from said compression chamber, a discharge valve and retainer means assembly comprising:

wall means defining a valve discharge chamber in said central body element extending between said upper and lower end plates, a valve seat on one wall of said valve discharge chamber communicating with said discharge outlet;

a valve retainer in said valve discharge chamber including a base element dimensioned to cooperate with said one wall of said discharge chamber, a spacing element on one end of said base element dimensioned to space said base element from said valve seat, holding means extending from said base element including a first point contacting another wall of said discharge chamber and a second point contacting said base element at a fulcrum intermediate the ends of said base element to secure said retainer in said chamber with said base portion deflected between said fulcrum and said spacing element to form a constant radius therebetween,

a resilient valve member mounted on the base element of said retainer between the base element and said valve seat being biased against said valve seat to overlay said valve seat with said valve being movable between its closed position over said valve seat to an open position forming a constant radius against said base element of said valve retainer.

4,373,883

APPARATUS FOR PRODUCING GRANULES FROM MOLTEN METALLURGICAL SLAGS

Kazuo Tachimoto, Tokyo, and Toyosuke Tanoue, Toyonaka, both of Japan, assignors to Ishikawajima-Harima Jukogyo Kabushiki Kaisha, Tokyo and Sumitomo Metal Industries, Ltd., Osaka, both of, Japan

Division of Ser. No. 2,099, Jan. 9, 1979, abandoned, which is a continuation-in-part of Ser. No. 828,856, Aug. 29, 1977, abandoned. This application Feb. 18, 1981, Ser. No. 236,202

Int. Cl.³ B29B *1/54*

U.S. Cl. 425—8 **4 Claims**

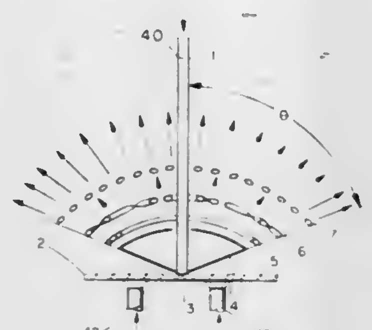

1. An apparatus for producing granules from molten metallurgical slag, comprising:

a. a container for the molten slag, and having an outlet for a stream of the slag,

b. a cooled non-wetting target surface having a high degree of smoothness adjacent to and spaced from the outlet for receiving by impingement, a stream of the molten slag from the outlet of the container,

c. means to direct the stream of molten slag from the outlet to impinge upon the target surface at a velocity to cause the stream to rebound therefrom and form an expanding film in the form of an inverted cone with the apex at the point of impingement on the target surface, wherein the cone is formed from degenerating expanding flying rings of the slag from which droplets are subsequently formed and projected along the cone form,

d. means to provide cooling air through which the projected droplets pass to cool and solidify to form the granules, and

e. means to collect the solid granules.

4,373,884

EQUIPMENT FOR THE INJECTION MOLDING OF SPECTACLES BARS OF PLASTIC MATERIAL WITH METAL CORE

Giovanni Gandini, Via Fabio Filzi, 5, 21040 Venegono Inferiore (VA), and Enrico Talamona, Via Plinio, 18, 21040 Venegono Superiore (VA), both of Italy

Filed Nov. 10, 1981, Ser. No. 320,293

Claims priority, application Italy, Nov. 11, 1980, 25873 A/80

Int. Cl.³ B29F *1/00;* B29C *6/00*

U.S. Cl. 425—126 R **6 Claims**

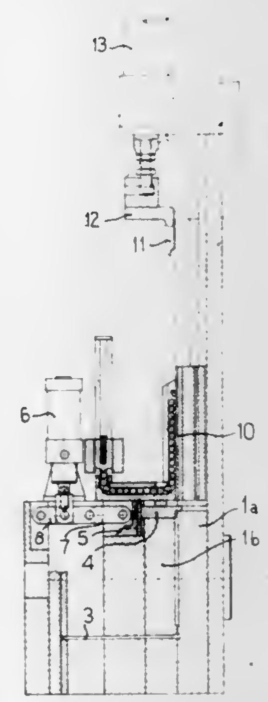

1. Equipment for the injection molding of spectacles bars of plastic material incorporating a stiffening metal stem or core, of the type comprising a mold closed at one end by a knife element, beyond which and along the extension of the longitudinal axis of the mold a guide is provided for said metal stem to be inserted into the molded bar, and means for pushing the stem out of the guide and into the mold, characterized in that said guide consists of a groove wherein the stem is guided with no slack on part of its sides, at least another side of the stem—from which projects a hinge previously welded at the end of the stem opposite to that of introduction—being guided by means apt to be removed as the stem advances introducing itself in the mold.

4,373,885

VACUUM SYSTEM FOR A MOVING PRODUCTION LINE

Brice W. Smyth, Newtownabbey, Northern Ireland, assignor to Delorean Research Limited Partnership, Bloomfield Hills, Mich.

Filed Dec. 31, 1980, Ser. No. 221,794

Int. Cl.³ B29F *1/06*

U.S. Cl. 425—129 R **9 Claims**

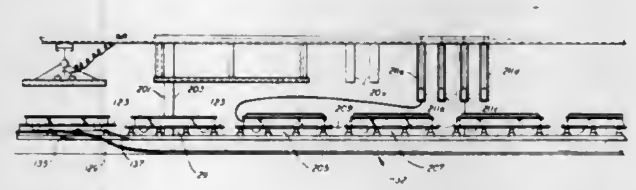

1. In an assembly line for vacuum assisted molding on which a plurality of molds are transported, means to supply vacuum to said molds comprising:

a. a vacuum generating means associated with each mold;

b. a compressed air manifold having first and second inlets and an outlet associated with each mold, said compressed air manifold also coupled to provide a compressed air input to said vacuum generating means;

c. a plurality of outlets from said vacuum generating means in communication with vacuum evacuation points formed in the mold;

d. a hose coupled to the outlet of each manifold, said hose adapted for connection to the first inlet of the manifold of a preceding mold on the assembly line; and

e. means for supplying compressed air including a source of compressed air and at least first and second hoses connected to the source of compressed air and adapted for connection to the second inlets of said manifolds.

4,373,886

APPARATUS FOR INJECTING CONFLUENT STREAMS OF PLASTIC MATERIAL INTO AN INJECTION MOLDING DIE

Karl Hehl, Arthur-Hehl-Strasse 32, 7298 Lossburg 1, Fed. Rep. of Germany

Continuation of Ser. No. 124,858, Feb. 26, 1980, abandoned, which is a division of Ser. No. 842,105, Oct. 14, 1977, Pat. No. 4,190,409. This application Jun. 17, 1981, Ser. No. 274,419

Claims priority, application Fed. Rep. of Germany, Oct. 14, 1976, 2646354

Int. Cl.³ B29F *1/00, 1/12*

U.S. Cl. 425—130 **6 Claims**

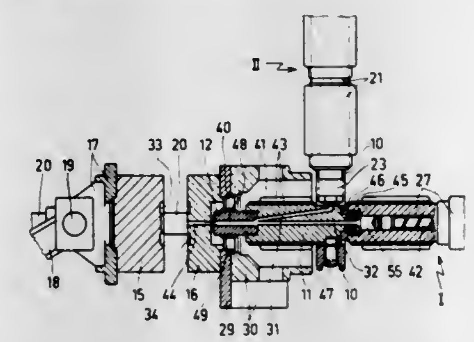

1. An apparatus for injecting confluent streams of plastic raw material from separate sources into the molding die of an injection molding machine, which machine has a die closing unit carrying a stationary die half on a stationary die carrier plate and a movable die half on a movable die carrier plate, guiding the latter for axial die opening and closing movements on at least two parallel tie rods, the plastic materials injecting apparatus comprising in combination:

an injector head in the form of an intermediate stationary die plate which is mounted on the stationary die carrier plate and supports a stationary cavity plate, as part of the stationary die half;

a generally axially oriented sprue opening in the stationary cavity plate;

a generally axially oriented first injection unit with a plastification screw surrounded by a plastification cylinder having a cylinder nozzle at its discharge end and hydraulic drive means operable to rotate and axially advance the plastification screw for plastification and injection of a first raw material through said cylinder nozzle;

an axial pulsation channel in the injector head linking the opening of the cylinder nozzle of the first injection unit with the sprue opening of the stationary cavity plate;

a generally radially oriented second injection unit with a plastification screw surrounded by a plastification cylinder having a cylinder nozzle at its discharge end and hydraulic drive means operable to rotate and axially advance the plastification screw for plastification and injection of a second raw material through said cylinder nozzle;

a radial pulsation channel linking the opening of the cylinder nozzle of the second injection unit with the sprue opening of the stationary cavity plate;

a centrally located injector nozzle as part of the injector head, the injector nozzle having a cavity which forms a flow junction at an acute angle between the axial and radial pulsation channels and a common nozzle discharge channel at its discharge end, the latter leading directly into the sprue opening of the stationary cavity plate;

a pair of supporting rods guiding the first injection unit for axial movements in relation to the injection head; and

a pair of supporting rods similarly guiding the second injection unit for radial movements in relation to the injection head, both pairs of supporting rods being rigidly connected to the stationary structure of the die closing unit.

4,373,887

APPARATUS FOR PRODUCING POROUS SHAPED PRODUCTS

Timothy A. Hanson, and David W. Smith, both of Ft. Collins, Colo., assignors to Teledyne Industries, Inc., Ft. Collins, Colo.

Continuation of Ser. No. 120,564, Feb. 11, 1980, abandoned, which is a division of Ser. No. 55,637, Jul. 9, 1979. This application Mar. 2, 1981, Ser. No. 239,556

Int. Cl.³ A23G *1/70*

U.S. Cl. 425—143 **4 Claims**

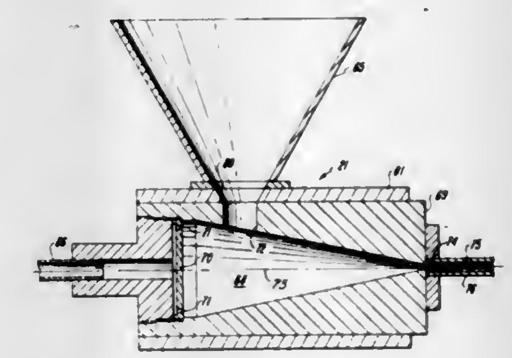

1. Apparatus for forming a fluidized stream of moldable plastic powder and air for injection into a mold comprising:

means defining a conical chamber having an outlet passage at the apex thereof;

means defining an aperture in the conical side of said chamber adjacent to the base thereof for receiving powder to be entrained in an airstream;

means for introducing air at the base of said conical chamber in a swirling stream for entraining and fluidizing plastic powder particles and conveying said particles in a fluidized airstream through said outlet passage;

a mold cavity having an inlet coupled to receive said fluidized airstream from said outlet passage;

and means for introducing water in a controlled amount into said air for moisturizing said fluidized plastic powder airstream.

4,373,888

APPARATUS FOR MASS-PRODUCING MEDICAL TABLETS

Masaki Yamamoto, Osaka, Japan, assignor to Takeda Chemical Industries, Ltd., Osaka, Japan

Filed Jul. 2, 1980, Ser. No. 165,399

Claims priority, application Japan, Jul. 13, 1979, 54-89407

Int. Cl.³ B26B *17/00*

U.S. Cl. 425—149 **3 Claims**

1. In an apparatus for mass-producing medical tablets, which includes a die cavity support running along a predetermined line, said die cavity support including equally spaced die cavities in the running direction thereof, each of said die cavities being associated with a lower punch ascending and descending therein; an upper punch holder running in parallel with said running direction of said die cavity support, said upper punch holder holding upper punches for ascending and descending in opposite direction to that of said lower punches; medical composition supply means for supplying a medical composition to each said die cavity at a first position where said lower punch

in said die cavity is fully lowered to secure a maximum space to receive said medical composition therein; punch compression means for urging said upper and lower punches toward said die cavity to compact the medical composition into tablets; and tablet discharge means for discharging the tablets from said apparatus after said lower punch ascends in said die cavity, said tablet discharge means being located at a second position where said lower punch is fully raised in said die cavity, the improvement comprising:

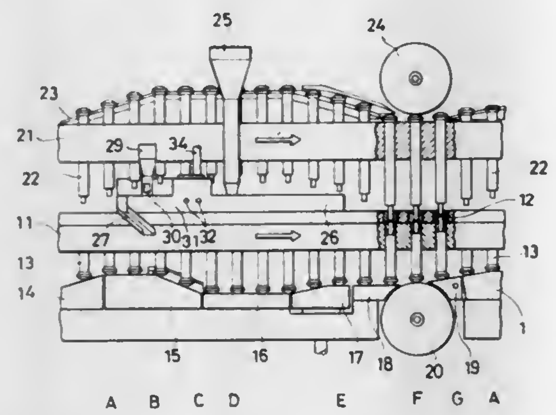

(a) a lubricant dispensing compartment located adjacent to said second position and being provided with a lubricant supply means, for dispensing powdered lubricant into each said die cavity on top of each said lower punch after said lower punch has reached said second position; and

(b) a jet compartment located at said first position, and adapted to confine a dispersed lubricant within said jet compartment, and including a jet nozzle for injecting compressed air toward said lower punch, thereby causing the lubricant on top of said lower punch to disperse and fill said jet compartment.

4,373,889

HYDRAULIC PRESS ASSEMBLY

Leonard Brown, Levittown, Pa., assignor to Crossley Machine Company, Inc., Trenton, N.J.

Filed Feb. 13, 1981, Ser. No. 234,172

Int. Cl.³ B29C *3/00*

U.S. Cl. 425—150 **10 Claims**

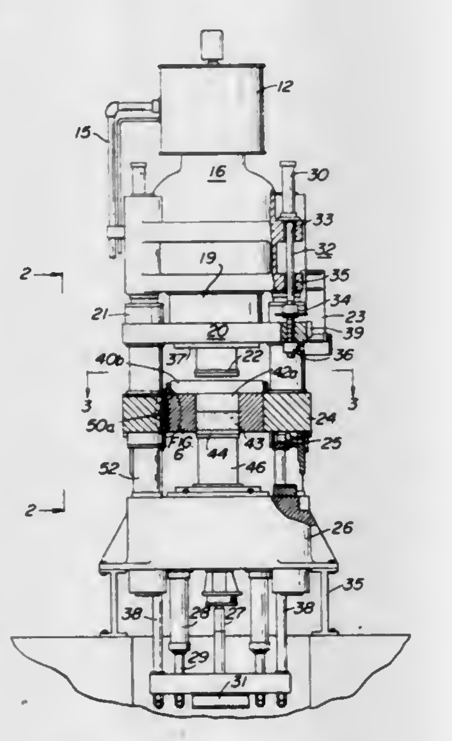

1. A hydraulic press or the like, comprising:

(a) a hydraulic power unit,

(b) a first plurality of vertically mounted piston cylinders coupled to said power unit and having respective downwardly extending piston rods arranged for movement in a vertical direction,

(c) a ram die assembly adapted to be coupled to said power unit and having a plurality of vertical apertures formed therein, said assembly also including an upper die attached to said ram, said piston rods being arranged to pass with clearance through respective ones of said apertures,

(d) a plurality of upper and lower stop means positioned toward the lower ends of said rods respectively above and below said vertical apertures in said ram assembly and being separated from one another by a predetermined space greater than the depths of said apertures, said ram assembly being movable downwardly at a relatively fast rate while being suspended principally by said lower stop means during most of its downward descent during a cycle of operation,

(e) a mold case below said ram assembly for holding a demountable mold box having a generally centrally-located aperture in the path of said upper die,

(f) a lower die disposed below said mold case and aligned with the aperture thereof, the upper surface of said die being positioned to move into said mold box aperture and cooperate therewith to define a mold cavity in which material to be processed is placed,

(g) means associated with at least one of said stop means and with said ram assembly which cooperate to produce a signal when said upper die has its downward movement arrested by its contact with said material in said mold cavity and is supported substantially only thereby whereupon said piston rods continue their downward movement, and (h) means coupled to said signal producing means and to said power unit for causing, in response to said signal, said power unit to be coupled to said ram assembly to drive it further downwardly at a relatively slow rate but with an extremely high forming force.

4,373,890

MECHANICAL SAFETY COVER INTERLOCK FOR INJECTION MOLDING MACHINE

Karl Hehl, Arthur-Hehl-Strasse 32, 7298 Lossburg 1, Fed. Rep. of Germany

Filed Nov. 13, 1981, Ser. No. 320,890

Claims priority, application Fed. Rep. of Germany, Nov. 13, 1980, 3042712

Int. Cl.³ B29F *1/00*

U.S. Cl. 425—153 **8 Claims**

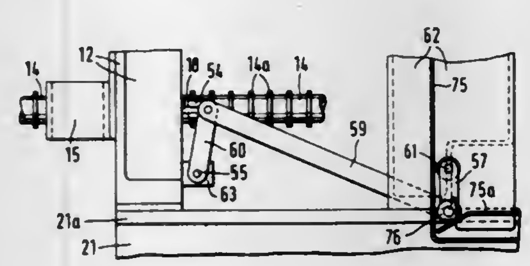

1. In a die closing unit for an injection molding machine which comprises a stationary die half mounted on a stationary die carrier member, a movable die half mounted on a movable die carrier member, a plurality of parallel tie rods guiding the movable die carrier member and defining the longitudinal axis of the die closing unit, a second stationary member located axially outside the area of the injection molding die, behind the movable die carrier member, and an axially openable and closable safety cover preventing access to at least a portion of the area of the injection molding die in its closed position; in said die closing unit, a mechanical safety cover interlock mechanism comprising in combination:

an arresting rod attached to the movable die carrier member and extending axially rearwardly towards the second stationary member, in parallel alignment with the tie rods, said stationary member having an opening for the axial movement of the arresting rod therethrough;

an arresting unit mounted on the second stationary member in alignment with the arresting rod and surrounding the latter; and

a control linkage operatively connecting the safety cover to the arresting unit in such a way that a displacement of the safety cover from its closed position actuates the arresting unit in the arresting sense and the complete closing of the safety cover actuates the arresting unit in the releasing sense; and wherein

the arresting rod has, on at least that length portion which moves through the arresting unit, a regularly spaced succession of grooves and intermediate arresting collars which occupy at least two diametrally opposite sides of the arresting rod, the arresting collars having at least one of their two axially opposite flanks oriented transversely to the arresting rod axis, so as to serve as an abutment flank;

the arresting unit includes two arresting jaws arranged on diametrally opposite sides of the arresting rod so as to face the arresting collars of the latter, the arresting jaws being guided for movement into and out of engagement with the arresting rod, each arresting jaw having at least one arresting ridge with at least one of its two axially opposite flanks oriented to cooperate with the abutment flank of an arresting rod collar to produce an arresting action on the arresting rod and connected movable die carrier member;

the arresting ridges of the two arresting jaws and the arresting collars on opposite sides of the arresting rod are axially staggered in such a way that, when the arresting rod is positioned to create a butting alignment between an arresting rod collar and an arresting jaw ridge on one side, the ridge of the other arresting jaw is positioned axially halfway between two successive rod collars on the other side;

the axial spacing of the arresting collars on the arresting rod is not less than twice the combined axial widths of an arresting collar and an arresting ridge, so that a simultaneous butting impingement between arresting collars and arresting ridges on both sides of the arresting rod during the engagement approach of the arresting jaws is made impossible for all arresting rod positions;

the control linkage includes means for actuating the arresting unit by forcibly closing the arresting jaws against each other to obtain a radial engagement between abutment flanks of the arresting rod collars and the arresting jaw ridges, the jaw closing force being derived from the safety cover displacement;

said arresting jaw closing means engages the arresting jaws in such a way that the jaw closing force acts on the two arresting jaws without a force reaction from a stationary part of the arresting unit, so that the position of the arresting jaws during their closing movement, while being determinate relative to each other, is indeterminate relative to the arresting rod within the guided mobility of the arresting jaws, and the closed distance of the arresting jaws is such that the arresting ridge of one jaw remains out of engagement with the arresting rod, when the arresting ridge of the other jaw is fully engaged in an arresting rod groove.

4,373,891

APPARATUS FOR COOLING A TRANSFER MANDREL

Nobuhiro Kishida, Tokyo; Kunihiro Shishido, and Satoshi Haryu, both of Shobu, all of Japan, assignors to Toyo Seikan Kaisha, Ltd., Tokyo, Japan

Filed Jun. 26, 1981, Ser. No. 278,005

Claims priority, application Japan, Jul. 27, 1980, 55-86436

Int. Cl.³ B29C *17/07;* F27D *3/12*

U.S. Cl. 425—174.4 **11 Claims**

1. An apparatus for cooling a transfer mandrel, said transfer mandrel including a top portion upon which a thermoplastic resin parison can be mounted, a cylindrical portion disposed beneath said top portion, and a lower portion adapted to be removeably, rotatably engaged with a peripheral portion of a rotary table, said rotary table being adapted to rotate oppositely to a heating means and including means for engaging said lower portion of said transfer mandrel, said cooling apparatus being mounted along the peripheral edge of rotary table above said means for engaging and comprising a cooling block having a cavity through which cooling water flows and a concave surface opposing said cylindrical portion of said transfer mandrel, said concave surface having a profile conforming to the

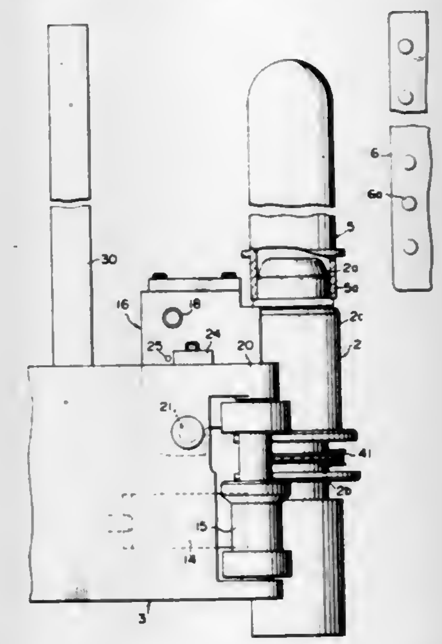

cylindrical portion of said transfer mandrel, means for adjusting the position of the cooling block so that said concave surface of said cooling block may be brought into whole contact with the cylindrical portion of said transfer mandrel when said transfer mandrel is engaged, and a spring which pushes a surface portion of said cooling block opposite said concave surface, whereby the cylindrical portion of said transfer mandrel is cooled so as to prevent said top portion from rising in temperature.

4,373,892

APPARATUS FOR PREPARING BREAD DOUGH

Joseph Nordmann, 3659 Paramount Ridge La., Cincinnati, Ohio 45239

Filed Jan. 11, 1982, Ser. No. 338,209

Int. Cl.³ A21C *3/04, 3/10, 3/02, 11/10*

U.S. Cl. 425—207 **10 Claims**

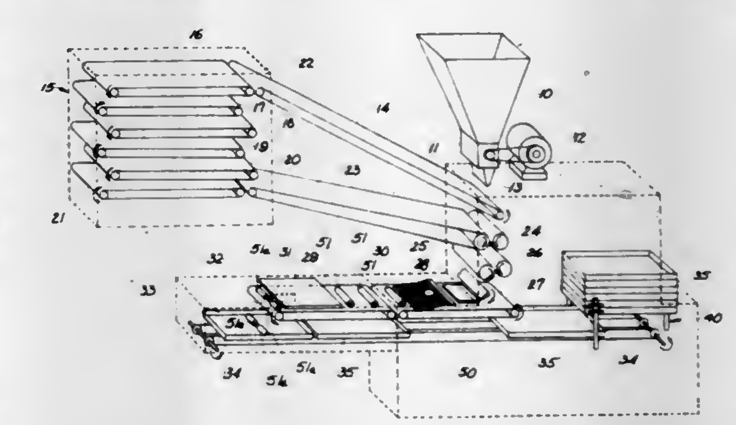

1. Apparatus for preparing bread dough, comprising a downwardly and inwardly tapering hopper for bulk dough, a rotary pump beneath said hopper communicating therewith, a die through which dough is extruded by said pump in a continuous ribbon, first conveyor means for receiving said ribbon of dough from said die, proofing means through which said ribbon of dough is conducted for a predetermined period of time, second conveyor means for receiving said ribbon of dough from said proofing means, guide rolls for conducting said

ribbon of dough through a substantially vertical path of travel, substantially horizontal conveyor means for receiving said ribbon of dough from said guide rolls, means for cutting said ribbon of dough into individual pieces of predetermined length while traveling on said horizontal conveyor means, means to roll said individual pieces into cylindrical shapes with the axes thereof transverse to the direction of travel of said horizontal conveyor means, means to divide said individual pieces into at least two further pieces of substantially equal size, and means to convey and position a pan beneath the end of said horizontal conveyor means to receive said futher pieces of dough.

4,373,893
BENCH SCALE DRUM AGGLOMERATOR AND POWER MEANS

James C. Barber, Florence, Ala., assignor to James C. Barber and Associates, Inc., Florence, Ala.
Division of Ser. No. 223,122, Jan. 7, 1981. This application Oct. 29, 1981, Ser. No. 316,344
Int. Cl.[3] B22F *3/00*
U.S. Cl. 425—222 **2 Claims**

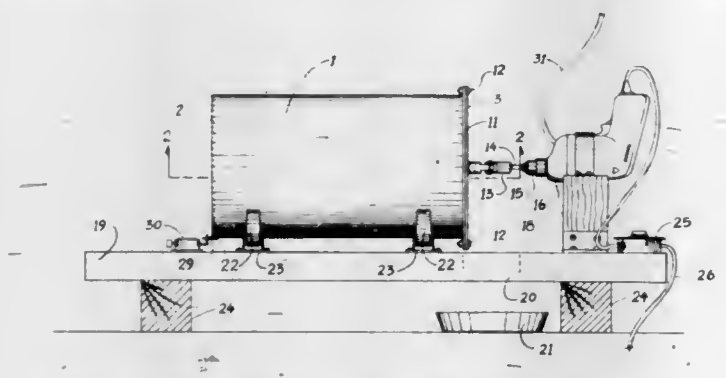

1. Bench scale apparatus for agglomerating discrete solid particles by joining the same with a salt crystallized from a solution, comprising:
a rotatably mounted horizontal cylinder with a ratio of diameter length of 0.3 to 0.8;
variable drive means for said cylinder including a single phase electric motor;
transfer means for said driving force including a sequentially connected universal joint;
means for control of the speed of cylinder rotation including a variable electric resistance in the motor circuit;
said control means varying the speed of rotation in the range of 25 to 75 percent of the critical speed, where such critical speed is determined by the formula $R=76.5/\sqrt{d}$ where d is the diameter of the cylinder in feet and R is the critical speed in rpm to produce agglomerates by tumbling in said cylinder;
removable end plates in said cylinder having concentric openings 60 to 70 percent of the cylinder diameter;
air cooling means directed on said motor;
a mounting base plate for said assembly sized to fit into a laboratory hood.

4,373,894
METHOD AND APPARATUS FOR MAKING PLASTIC TUBES

George W. Peppel, Arlington, Tex., assignor to Patient Technology, Inc., Hauppauge, N.Y.
Filed Feb. 22, 1980, Ser. No. 123,633
Int. Cl.[3] B29C *3/00*
U.S. Cl. 425—393 **8 Claims**

1. Apparatus for manufacturing a thermoplastic tube of substantially uniform thickness and having an end closed pinhole free and with substantially the thickness of the remainder of the tube comprising:
a heated die having one end portion shaped to form a hollow cylinder with a shaped closed end;
means for heating said die;
a heat conductive metallic collar surrounding the hollow cylinder end portion of said die and acting as a heat sink to dissipate heat therefrom;
means for supporting an open ended thermoplastic tube of substantially uniform thickness in spaced relationship from said heated die;
a mandrel having an end portion shaped to form a hollow cylinder with a closed end complementary to the shape of said heated die and insertable into said tube through one end thereof;
means for advancing said mandrel into said tube a predetermined distance so that an end portion of the tube projects beyond the shaped end of the mandrel;
means for holding said tube on said mandrel;
first means for relatively moving said tube and mandrel with respect to said heated die so that the tube extends into the

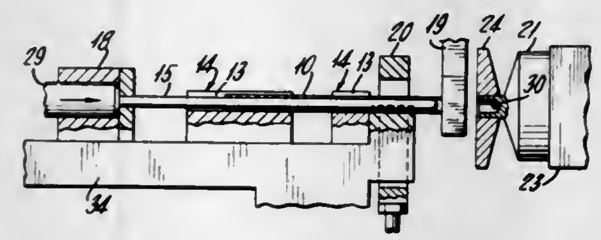

heated die and has its projecting end shaped and closed pinhole free by interaction between the heated die and the shaped end of said mandrel, said heated die and shaped end of said mandrel pressing against the outside and inside respectively of said tube to form the same closed pinhole free in a single forming step to the thickness of substantially that of the thickness of the remainder of said tube and the inner and outer shapes of said heated die and mandrel, said metallic collar dissipating heat from said cylinder to prevent excessive heating of the side walls of the tube during shaping and closing of the projecting end; and
second means for relatively moving said tube and mandrel with respect to said heated die to thereby withdraw the tube from said die.

4,373,895
EXTRUSION DIE AND METHOD FOR PRODUCING EXTRUSION DIE FOR FORMING A HONEYCOMB STRUCTURE

Shinichi Yamamoto, Takahama, and Toshihiko Ito, Aichi, both of Japan, assignors to Nippon Soken, Inc., Nishio, Japan
Filed Sep. 11, 1980, Ser. No. 186,268
Claims priority, application Japan, Sep. 12, 1979, 54-117626
Int. Cl.[3] B29F *3/04*
U.S. Cl. 425—461 **49 Claims**

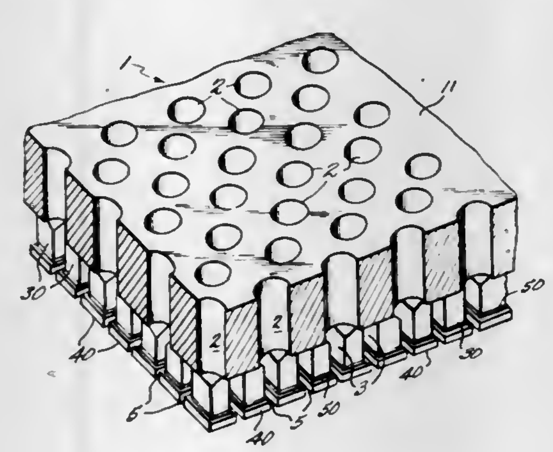

1. A method for producing an extrusion die to be used in forming a honeycomb structure provided with numerous axially extending passages which are separated by thin walls, comprising the steps of:
preparing from a single metallic block a die body having

opposing end surfaces and a shape and size corresponding to those desired for said extrusion die,
forming numerous discrete initial feed passageways in said die body for initially receiving and feeding an extrudable material of said honeycomb structure and interconnected pooling slots for pooling and distributing said extrudable material directly fed from said feed passageways temporally,
said feed passageways being formed from one of said end surfaces of said die body towards the other end surface opposed to said one end surface in an axial direction of said die body at predetermined intervals to a predetermined depth,
said interconnected pooling slots being formed from said other end surface of said die body towards said one end surface thereof to the level of said predetermined depth,
the inner end of each of said feed passageways being directly communicated with said pooling slots,
securing a metallic plate directly to said other end surface of said die body to cover said pooling slots, and
forming interconnected extrusion slots in said metallic plate so as to be respectively narrower than but in register and communicated with said interconnected pooling slots for extruding said extrudable material distributed through said pooling slots,
said interconnected extrusion slots having the same shape and width as a transverse cross section of said walls of said honeycomb structure.

29. An extrusion die for making a honeycomb structure, comprising:
an integral metallic die body having two opposed surfaces from one of which a multiplicity of discrete feed passageways extend inwardly to a level of about 13 mm. to about 16 mm. toward the other of said surfaces and having in said other surface a grid network of criss-crossing pooling slots running transverse to said passageways and forming a multiplicity of intersections and being interconnected throughout said network and extending from said other surface toward said one surface to said level at which said passageways meet said slots for direct communication, said pooling slots being formed by individual columns integral with said die body,
the number of said feed passageways being substantially less than the number of said pooling slot intersections, and
a multiplicity of discrete metallic platelets each larger than said columns in transverse dimensions and nonintegral with said die body but respectively secured permanently to said columns and together forming a grid network of interconnected extrusion slots respectively registering on said pooling slots but having a width substantially narrower than said pooling slots.

4,373,896
BURNER CONSTRUCTION

Eugene B. Zwick, Huntington Beach; Dung D. Nguyen, Fullerton; William D. Brigham, Westminister, and Kenneth Hoffman, Fountain Valley, all of Calif.
Division of Ser. No. 956,375, Oct. 31, 1978. This application Apr. 3, 1981, Ser. No. 250,834
Int. Cl.[3] F23Q *9/00*
U.S. Cl. 431—9 **12 Claims**

1. A method for maintaining a uniform pilot flame within a burner having an axis defined by a cylindrically shaped combustion chamber, said pilot flame disposed on said axis, operating independently over a range of combustion air flow rates, said method comprising the steps of:
introducing a combustion air flow into the burner;
providing said combustion air flow with a swirling flow configuration that establishes a quiet-air zone within the burner by injecting combustion air into said burner in a forwardly axial direction generally tangential to and slightly away from said pilot flame and tangential to the walls of said cylindrical combustion chamber thereby creating a secondary air flow in the reverse direction along said axis of said combustion chamber in a direction toward said pilot flame and thereby creating a generally quiet-air region encircling said pilot flame, interaction between said secondary air flow and said combustion air flow pulling air from said quiet-air region at a rate gener-

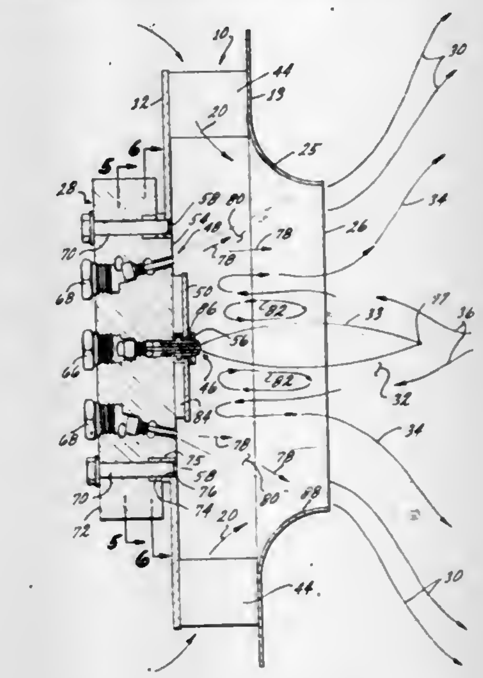

ally proportional to the rate of air flow into said quiet-air region from said secondary air flow,
whereby said pilot flame consumes fuel at a rate substantially independent from the rate of injection of said combustion air flow.

4,373,897
OPEN DRAFT HOOD FURNACE CONTROL USING INDUCED DRAFT BLOWER AND EXHAUST STACK FLOW RATE SENSING

Ralph H. Torborg, Minnetonka, Minn., assignor to Honeywell Inc., Minneapolis, Minn.
Filed Sep. 15, 1980, Ser. No. 187,040
Int. Cl.[3] F23N *3/00*
U.S. Cl. 431—20 **11 Claims**

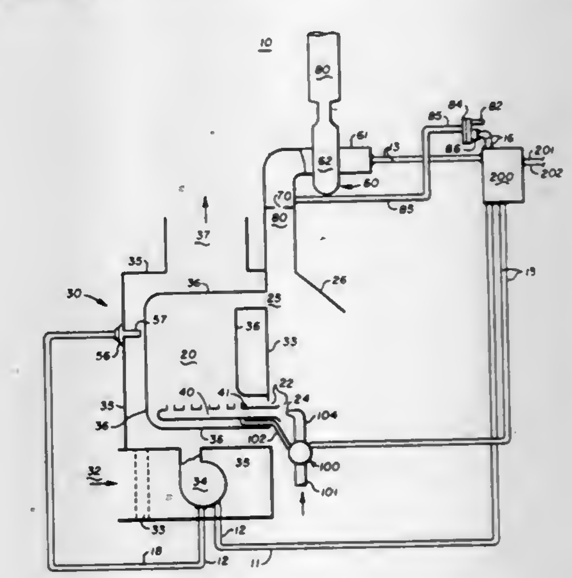

1. In a heating system having a combustion chamber with a fuel burner located adjacent an air opening, an exhaust stack, and an open draft hood connected to said exhaust stack and in communication with an upper end of the combustion chamber and open to atmospheric air, the improvement comprising:
(a) a blower connected to the exhaust stack for inducing a draft in the exhaust stack and for drawing air into the combustion chamber and into the draft hood;
(b) means adapted to be mounted in the exhaust stack for

forming a flow restriction in the exhaust stack upstream from the blower;
(c) fuel supply control means responsive to a control signal representing flow of exhaust gas through the flow restriction to supply fuel to the burner only when such control signal exceeds a predetermined magnitude;
(d) sensor means for sensing a quantity representative of said flow of exhaust gas through the flow restriction and for communicating said quantity as a control signal to said fuel supply control means; and
(e) blower control means adapted for connection to the blower for starting and stopping operation of the blower.

4,373,898
TIMER AND CONTROL CIRCUIT
John E. Bohan, Jr., Minneapolis, Minn., assignor to Honeywell Inc., Minneapolis, Minn.
Filed Mar. 13, 1981, Ser. No. 243,271
Int. Cl.³ F23N *5/00*
U.S. Cl. 431—73 8 Claims

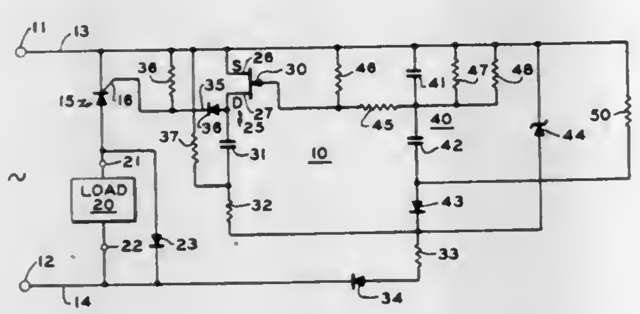

1. A timer and control circuit having a timing sequence with two timing intervals established by creating a plurality of operating modes for a field effect transistor with said circuit adapted to control load means, including: silicon controlled rectifier means having gate means with said silicon controlled rectifier adapted to connect said load means to a source of alternating current voltage; a field effect transistor having a source-drain channel means and a control gate with said source-drain channel means connected to said silicon controlled rectifier gate means to control the conduction of current through said silicon controlled rectifier means and said load means; said source-drain channel means further connected in a series circuit with a capacitor, a diode, and impedance means with said series circuit connected across said source of voltage; resistance means connected in parallel circuit with a series combination of said source-drain channel means and said capacitor; capacitor voltage divider means connected to said source of voltage and initially charged upon application of said source of voltage to said timer and control circuit; said capacitor voltage divider means connected to said field effect transistor control gate to bias said field effect transistor to establish said plurality of operating modes for said field effect transistor; and bleeder impedance means connected to said capacitor voltage divider means to bleed off said initial charge from said capacitor voltage divider means to cause said field effect transistor to sequentially pass through said plurality of operating modes.

4,373,899
FUEL REACTOR
Gerardus A. Markus, Gravenzande, Netherlands, assignor to Black, Sivalls & Bryson, Houston, Tex.
Filed Apr. 24, 1981, Ser. No. 257,273
Claims priority, application United Kingdom, Jun. 17, 1980, 8019826
Int. Cl.³ F23D *15/00*
U.S. Cl. 431—158 12 Claims

1. A fuel reactor comprising, in combination:
(a) a generally circular cross-section elongate outer shell having an inlet axial end and an outlet axial end opposite thereto;
(b) an end wall closing said outer shell at said inlet end;
(c) a fuel inlet in said end wall and adapted to project fuel axially into said outer shell;
(d) an inner shell mounted within said outer shell to define an annular space therebetween;
(e) means connecting the inner and outer shells together at said discharge end of the inner shell;
(f) an open end at the other end of the inner shell axially spaced from said end wall of the outer shell;

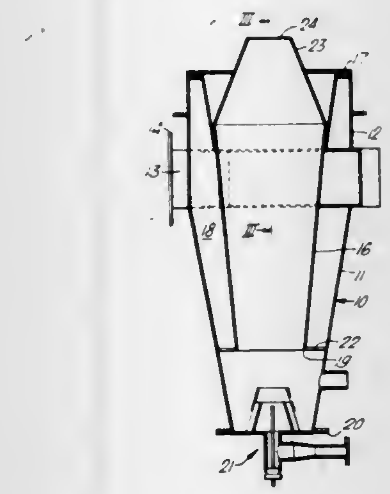

(g) a tangential combustion air inlet connected to the annular space at an axial location spaced from said other end of the inner shell;
(h) a discharge nozzle mounted on the discharge end of the inner shell; and
(i) at least one opening in the inner shell adjacent the discharge nozzle communicating with the annular space, to allow some of the air to flow onto the exterior of the discharge nozzle to cool it.

4,373,900
BURNER FOR A KILN
Günther Eckelmann, Niedernhausen, Fed. Rep. of Germany, assignor to Pillard, Inc., Richmond, Va.
Filed Nov. 23, 1979, Ser. No. 96,813
Int. Cl.³ F23M *9/00*
U.S. Cl. 431—182 12 Claims

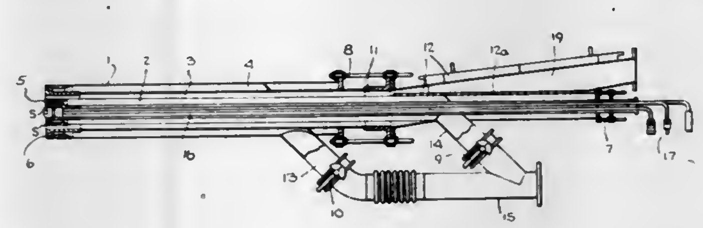

1. A burner for a kiln comprising
a first duct for conveying an air flow, said first duct having an annular outlet at a terminal end directed in a diverging direction to expel the air flow in a radially outward direction;
swirl means at said outlet of said duct for imparting a swirling effect to the expelled air flow;
a second duct concentric to and about said first duct for conveying a flow of pulverized coal, said second duct having an outlet at one end to expel the pulverized coal into a flame;
a third duct concentric to and about said first and second ducts for conveying an air flow, said third duct having an outlet concentric to and about said first duct outlet for expelling an air flow with an axial component; and
means for adjusting the air flows in said first and third ducts to adjust the shape of the flame extending from said second duct between an elongated shape and a flared conical shape.

4,373,901
ADJUSTABLE FLAME SPREADER FOR GUN-TYPE POWER GAS BURNER
Robert A. Kaplan; Mark A. Reicke, and James E. Wellman, all of Fort Wayne, Ind., assignors to The Scott & Fetzer Company, Fort Wayne, Ind.
Filed Jan. 16, 1981, Ser. No. 225,846
Int. Cl.³ F23C *5/06*
U.S. Cl. 431—186 9 Claims

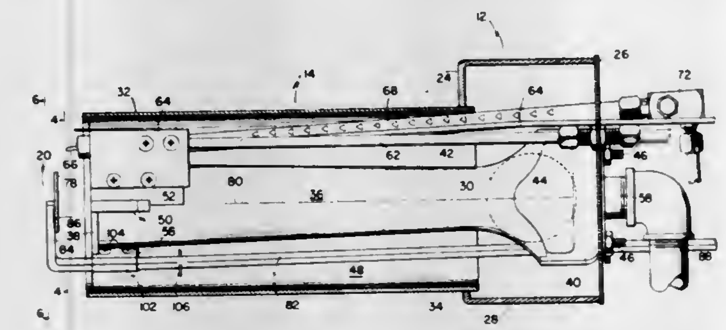

1. In a gun-type power gas burner comprising a plenum chamber having spaced front and rear walls joined by a side wall; an elongated blast tube having spaced distal and proximal ends and having a longitudinal axis, said proximal end being connected to said front wall and communicating with said plenum chamber; a blower having an air discharge duct connected to one of said walls and communicating with said plenum chamber; an elongated air-gas mixing tube coaxially disposed in said blast tube and having spaced discharge and inlet ends, said discharge end being adjacent said blast tube distal end and said inlet end extending into said plenum chamber, said mixing tube being circumferentially spaced from said blast tube to define a secondary air passage therewith, said mixing tube having an air admitting opening therein adjacent said inlet end and communicating with said plenum chamber; a gas supply line extending through one of said walls and into said inlet end of said mixing tube; and an imperforate flame spreader member spaced outwardly from said discharge end of said mixing tube and normal to said axis: the improvement wherein said flame spreader member is mounted on one end of an elongated element and comprising means for adjustably supporting the other end of said element on one of said plenum chamber walls for selective longitudinal movement of said element and flame spreader member between a first position closely spaced from said discharge end of said mixing tube and a second position spaced outwardly from said first position thereby selectively to adjust the width and length of the flame, said other end of said element extending rearwardly of said rear wall for manual adjustment of said element between said position thereof.

4,373,902
IMMEDIATE IGNITION SMOKELESS BURNING OF WASTE GASES
Robert D. Reed, and Robert E. Schwartz, both of Tulsa, Okla., assignors to John Zink Company, Tulsa, Okla.
Filed Jan. 26, 1981, Ser. No. 228,139
Int. Cl.³ F23D *15/00*
U.S. Cl. 431—202 9 Claims

1. An improved combustion apparatus for smokeless combustion of waste gases, comprising;
(a) a vertical flare stack of selected height and diameter having an outer steel wall; a top portion of selected length called a combustion portion;
(b) a coaxial central steam-air pipe of selected diameter supported inside said outer wall, closed off at its bottom end, and extending upwardly almost to the top of said outer wall;
(c) a plurality of circumferentially spaced radial steam-air tubes, of selected diameter inserted through the wall of said steam-air pipe near its bottom end, and said outer steel wall; said steam-air pipe supported concentrically at its top end by a plurality of radial bars of selected circumferential width, positioned between said steam-air pipe out to and through said outer wall;
(d) steam and air manifold means surrounding said outer

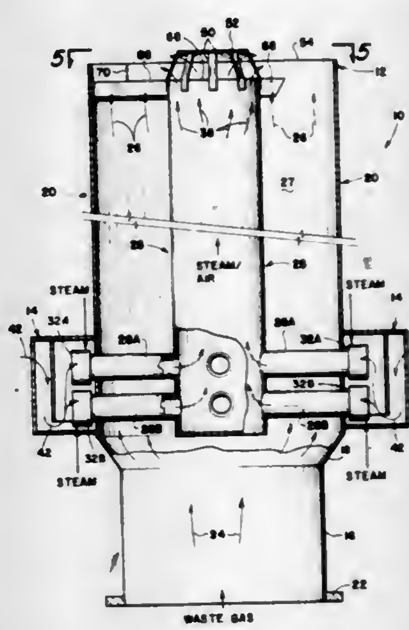

wall and enclosing the outer ends of said steam-air tubes; for flow of primary combustion air and steam to said steam-air pipe;
(e) the top of said steam-air pipe covered with a baffle plate of selected diameter, supported above the top of said steam-air pipe a selected distance, by a selected plurality of support legs of selected circumferential width, circumferentially spaced; said manifold adapted to receive a supply of steam at a selected pressure, and air, said stack adapted to receive a flow of waste gas of selected flow rate.

4,373,903
BURNER SYSTEM
Joachim Wünning, Leonberg, Fed. Rep. of Germany, assignor to Aichelin GmbH, Korntal-Münchingen, Fed. Rep. of Germany
Filed Nov. 24, 1980, Ser. No. 209,591
Claims priority, application Fed. Rep. of Germany, Nov. 29, 1979, 2948048
Int. Cl.³ F23D *11/44*; F27B *5/14*; B05B *1/24*
U.S. Cl. 431—215 12 Claims

1. A burner system for heating oven spaces of industrial ovens of the kind using a ceramic burner tube at the downstream end of the burner system and an air supply tube coaxial with the burner tube connecting therewith to provide a burner port in the region of the connection, where air and fuel are mixed for ignition, a fuel supply tube of smaller diameter leading to the burner port region being centered within the air supply tube, the air supply tube being surrounded by a passage through which combustion product gases pass out in countercurrent to the air supply and being equipped with means constituting a recuperator for preheating of the air supply by heat removed from the combustion product gases, said air supply tube further having an air-guiding cylinder within it for confining the air supply flow to an annular space for effective operation of said recuperator, said burner system further comprising the improvement which consists in that:
an annular nozzle (15) adjacent to the interior wall of said burner tube (5) is connected to said air supply tube (6) at its extremity, for causing air from said annular space (12) of said air supply tube to flow out at increased velocity in

an annular jet along the interior wall of said burner tube (5), and

means are provided for cooling said air supply tube (6) in the

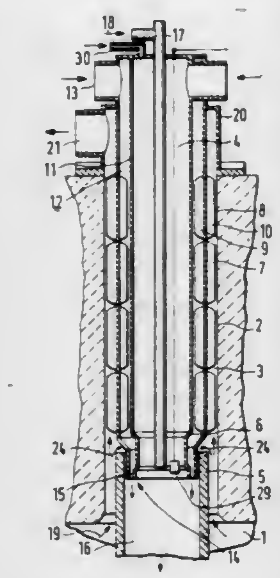

region of its extremity at said burner port (14) by gas, of a temperature lower than that of the flame gases, penetrating between said air supply tube (6) and said burner tube (5).

4,373,904
INFRA-RED GENERATOR

Thomas M. Smith, 114 Villinger Ave., P.O. Box C-94, Cinnaminson, N.J. 08077

Continuation-in-part of Ser. No. 20,079, Mar. 13, 1979, Pat. No. 4,290,746, Ser. No. 94,901, Nov. 16, 1979, Pat. No. 4,272,238, Ser. No. 952,332, Oct. 18, 1978, Pat. No. 4,326,843, and Ser. No. 775,838, Mar. 9, 1977, Pat. No. 4,272,237, which is a continuation-in-part of Ser. No. 701,687, Jul. 1, 1976, abandoned, Ser. No. 906,229, May 18, 1978, Pat. No. 4,157,155, and Ser. No. 674,409, Apr. 7, 1976, Pat. No. 4,035,132. This application Aug. 14, 1980, Ser. No. 178,121

The portion of the term of this patent subsequent to Jul. 12, 1994, has been disclaimed.

Int. Cl.³ F23D *13/12*

U.S. Cl. 431—328 **9 Claims**

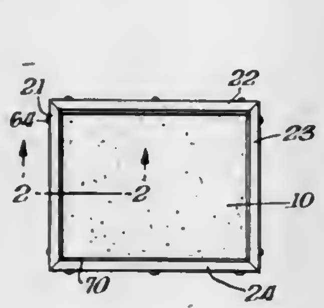

1. In a gas-fired radiant heater having a porous refractory mat on one face of which a gaseous combustion mixture is burned, and mounting means holds the mat with its opposite face against an open combustion mixture plenum box from which gaseous combustion mixture is passed through the mat so that it can be burned, the improvement according to which the sole structure for preventing movement of the combustion mixture to the edges of the mat from the mat's interior is a second plenum encircling the combustion mixture plenum box and having a plenum face against which the mounting means holds said opposite face of the mat all around the mat margin, the second plenum having narrow slot means along that plenum face through which slot means a different gas can be discharged into said opposite face of the mat to act as a confining barrier around the combustion mixture in the mat.

4,373,905
OIL HEATER

Allen J. Hettich, 4800 W. Richmond Rd., Aberdeen, S. Dak. 57401

Filed Aug. 4, 1980, Ser. No. 175,124
Int. Cl.³ F23D *7/00*

U.S. Cl. 431—330 **9 Claims**

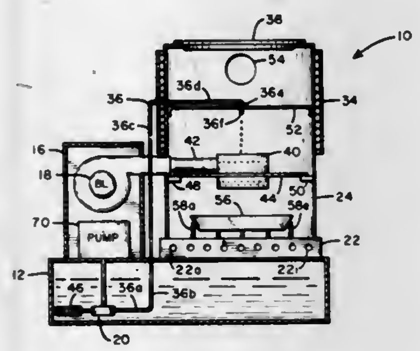

1. Waste oil heater for burning of waste oil comprising:

a. combustion chamber means including chamber access and vent access;

b. fuel introducing means in an upper center portion of said chamber means and connected to a pump source of fuel; and

c. combustion air introducing and mixing means including a closed annular channel suspended in the combustion chamber means below the fuel introducing means with air holes in inner and outer surfaces of the channel, said annular channel connected to an air blower whereby said fuel introducing means drops droplets of fuel into said combustion air introducing and mixing means for combustion of fuel and resultant vapors of mixed air and gases in the area surrounding the combustion air introducing and mixing means thereby providing for maximum heat output.

4,373,906
MULTI-LAMP PHOTOFLASH UNIT AND FABRICATING PROCESS

James L. Holmes, Montoursville, Pa., assignor to GTE Products Corporation, Stamford, Conn.

Filed Dec. 29, 1980, Ser. No. 221,074
Int. Cl.³ F21K *5/02*

U.S. Cl. 431—359 **21 Claims**

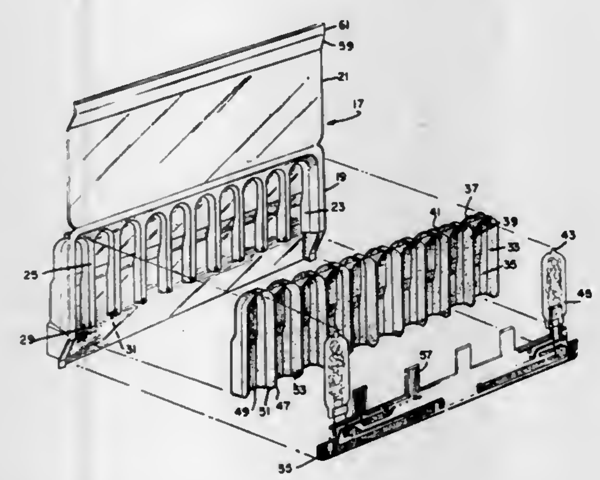

1. A multi-lamp photoflash unit comprising:

a housing member having back and front portions with said back portion having a plurality of spaced cavities each having a longitudinal axis and a planar surface intermediate each pair of said spaced cavities normal to said longitudinal axis, said front portion transmitting light and formed to enclose said cavities and one side of said planar surface;

a reflector unit having a plurality of spaced cavities with a

back surface thereof nesting within said cavities of said housing member and a front surface having a light reflective surface and formed to receive a flashlamp, said reflector unit having a planar surface intermediate each pair of said cavities and aligned with a planar surface of said housing member; and

a venting aperture extending through at least one aligned planar surface of said reflector unit and housing member.

4,373,907
APPARATUS FOR MANUFACTURING RAPIDLY COOLED SOLIDIFIED SLAG

Shuji Kajikawa; Kazuo Kanai, and Haruo Ito, all of Fukuyama, Japan, assignors to Nippon Kokan Kabushiki Kaisha, Tokyo, Japan

Filed May 27, 1981, Ser. No. 268,074
Claims priority, application Japan, Jun. 13, 1980, 55-79977
Int. Cl.³ F27D *15/02, 3/00;* **C21B** *3/06*

U.S. Cl. 432—83 **6 Claims**

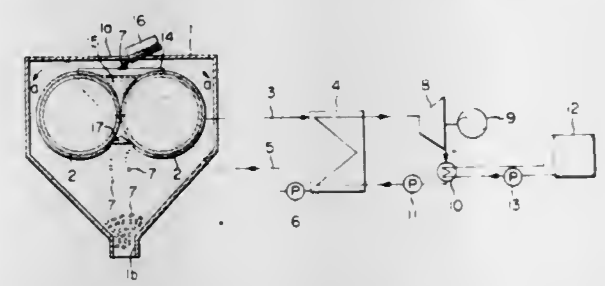

1. In an apparatus for manufacturing a rapidly cooled solidified slag, which comprises:

a pair of cooling drums housed in a housing, each having a peripheral surface, each cooling drum having the same diameter and the same length, the peripheral surfaces of said cooling drums being in contact with each other, the axial lines of said pair of cooling drums being arranged in parallel with each other in the same horizontal plane;

a driving means for rotating said pair of cooling drums in directions opposite to each other at the same peripheral speed in the rising direction of the peripheral surface of each of said pair of cooling drums at the contact portion of said pair of cooling drums;

means defining a pair of weirs arranged at the both ends of said pair of cooling drums, to form a slag sump in cooperation with the upper half of the peripheral surface of each of said pair of cooling drums;

a slag feeding means arranged above said pair of cooling drums, for pouring a molten slag into said slag sump;

a scraper provided so as to be in contact with the lower half of the peripheral surface of each of said pair of cooling drums;

cooling water for cooling said pair of cooling drums, said cooling water being supplied into each of said pair of cooling drums from an end of a hollow center axle located within each of said pair of cooling drums, said cooling water exchanging heat with said molten slag in said slag sump, which slag has adhered to the peripheral surface of each of said pair of cooling drums, along with the rotation of each of said pair of cooling drums, and, said cooling water which has exchanged heat with said molten slag being discharged to the outside of each of said pair of cooling drums from the other end of said center axle of each of said pair of cooling drums for heat recovery;

whereby said molten slag adhered to the peripheral surfaces of said pair of cooling drums is converted into a rapidly cooled solidified slag through heat exchange with said cooling water and is then peeled off from the peripheral surfaces of said pair of cooling drums by means of said scraper, along with the rotation of said pair of cooling drums;

the improvement wherein:

each of said pair of weirs defined by said weir defining means has an annular shape and has a hollow portion therein; and

said means defining each of said pair of weirs being respectively fixed to each edge of the peripheral surface of one of said pair of cooling drums so as to form a circular flange at right angles to the axial line of said one cooling drum over the entire circumference thereof.

4,373,908
KILN SHELL NOZZLE WITH ANNULAR FLUID DELIVERY

Peter J. Petit, Milwaukee, and Walter J. Hartwig, Watertown, both of Wis., assignors to Allis-Chalmers Corporation, Milwaukee, Wis.

Filed Nov. 23, 1981, Ser. No. 323,896
Int. Cl.³ F27B *7/36, 7/06;* **F02M** *45/00;* **C21B** *11/06*

U.S. Cl. 432—109 **2 Claims**

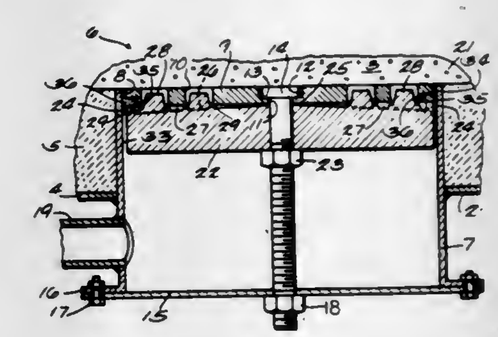

1. A self-cleaning port assembly for delivering fluid through a shell of a horizontal rotating reactor, such as a generally horizontal rotary kiln, for treating a tumbling bed of mixed-size particulate material; said port assembly having a hollow sleeve adapted for attachment to the reactor shell and with a first end thereof in communication with a chamber within the reactor; a cylindrical nozzle coaxially within said sleeve adjacent said first end of the sleeve; an orifice formed in the nozzle; means for delivering a fluid to said sleeve remote from said first end of said sleeve and said nozzle; a base member in said sleeve between said nozzle and said fluid delivery means with said base member cooperating with the nozzle to define a fluid distribution cavity therebetween; a platform extending from said base member through the fluid distribution cavity and into the nozzle orifice in spaced relation to said nozzle; an annular shoulder abutting said platform and said base member with said annular shoulder projecting away from the platform and away from the base member into the fluid distribution cavity; said annular shoulder, platform and nozzle cooperating to define an orifice fluid passage for permitting passage of fluid from the fluid distribution cavity into the reactor chamber, the improvement comprising:

at least a portion of said base member is spaced from said sleeve to define therebetween a fluid supply passage connecting said fluid delivery means to said fluid distribution cavity; a plurality of rest tabs circumferentially spaced upon a side of the base member adjacent the nozzle; the outer circumferential surface of said nozzle adjacent said base member defines a radial and axially extending notch; a sealing ring within said notch secured between the notch defining surfaces of said nozzle and said base member rest tabs with said sealing ring engaging said sleeve in sealing contact; whereby fluid under pressure passes from said fluid delivery means through the fluid supply passage and is diverted by said sealing ring to pass between said rest tabs into the fluid distribution cavity and into said orifice fluid passage for discharge from the port assembly.

4,373,909
GAS INJECTING KILN SHELL NOZZLE WITH PARTICLE ENTRY BARRIERS
Peter J. Petit, and Thomas J. Gill, both of Milwaukee, Wis., assignors to Allis-Chalmers Corporation, Milwaukee, Wis.
Filed Nov. 23, 1981, Ser. No. 323,897
Int. Cl.^{3} F27B *7/36, 7/06;* **C02M** *45/00;* **C21B** *11/06*
U.S. Cl. 432—109 **4 Claims**

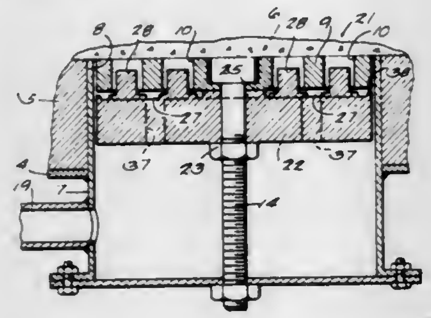

1. A port assembly for supplying fluid through a shell of a reactor, such as a generally horizontal rotary kiln, for treating therein a tumbling bed of mix sized particulate material; said port assembly having a hollow sleeve adapted for attachment to the reactor shell and having a first end thereof in communication with a chamber within the reactor, the improvements comprising:

(a) a cylindrical nozzle coaxially disposed within said sleeve adjacent said first end of said sleeve; an orifice formed in said nozzle having a central axis parallel to the sleeve;
(b) means (19) for delivering a fluid to said sleeve remote from said first end of said sleeve and said nozzle;
(c) a base member in said sleeve between said nozzle and said fluid delivery means with said base member cooperating with said nozzle to define a fluid distribution cavity therebetween and said base member cooperating with said sleeve to define a fluid passage from said fluid delivery means to said fluid distribution cavity;
(d) a platform axially extending from said base member through the fluid distribution cavity and into the nozzle orifice in spaced relation to said nozzle; said platform cooperating with the nozzle to define an annular chamber in communication with the fluid distribution cavity and open on the side of said nozzle opposite said fluid distribution; and
(e) an annular shoulder abutting said platform and said base member with said annular shoulder projecting away from the platform and away from the base member into the fluid distribution cavity in spaced relation to said nozzle and nozzle orifice to thereby cooperate with the nozzle to define a particle barrier gap between the nozzle and the shoulder on a side of the nozzle facing the base member; whereby ingress of particulate material from the reactor chamber into the port assembly is screened by a multistage screening in which particles too large to pass into the annular chamber are excluded therefrom and particles small enough to pass into the annular chamber are screened from entering the fluid distribution cavity by the particle barrier gap.

4,373,910
NON-TANGLING CHAIN LINK
Jorgen O. Bernt, 1357 Amber Crescent, Oakville, Ontario, Canada
Filed Sep. 1, 1981, Ser. No. 298,315
Int. Cl.^{3} F27B *7/14;* **F16G** *13/06*
U.S. Cl. 432—118 **4 Claims**

1. Chain for use in rotary kiln-type devices containing gas-borne particulate material, said chain comprising:
a plurality of flat area links having, in their designed orientation on said chain, flat material of greater width and depth dimensions than thickness dimensions,
a loop at each end of said flat material, defined by extensions extending from a location adjacent one side edge of said flat material and from a location adjacent the other side edge of said flat material,
said extensions converging to a junction remote from said flat material, said extensions conforming generally to the median plane of the flat material,
connector links alternating along said chain with said flat area links and joining a loop of one flat area link to a loop of the next,
said connector links defining a median plane,
said extensions defining an opening viewed perpendicular to the median plane of the flat material which at said junction

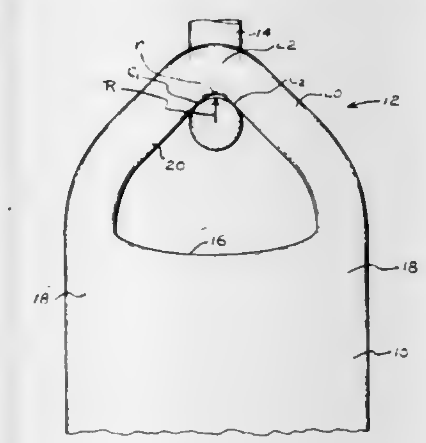

has a smaller inside radius of curvature than the radius of curvature of the cross section of the connector link at its extension contacting extents,
said connector links defining an opening viewed perpendicular to the median plane of the connector link which has a larger inside radius of curvature than the radius of curvature of the cross section of the extensions at their connector link contacting extents,
whereby with said chain hanging vertically and the connector link median planes are respectively perpendicular to said flat material median planes, a connector link contacts a loop at two and only two contact points.

4,373,911
APPARATUS FOR PREHEATING A STEEL SCRAP
Takasaburo Date, Yokohama; Toshimichi Maki, Tokyo; Mitsuya Iguchi, Himeji; Sumifusa Iwamaru, Himeji, and Hisashi Watanabe, Himeji, all of Japan, assignors to Nippon Kokan Kabushiki Kaisha and Toshin Seiko Kabushiki Kaisha, both of Tokyo, Japan
Filed Aug. 13, 1981, Ser. No. 292,678
Claims priority, application Japan, Aug. 29, 1980, 55-122941[U]
Int. Cl.^{3} F27B *9/04, 3/18;* **F27D** *17/00;* **C21B** *7/22*
U.S. Cl. 432—152 **5 Claims**

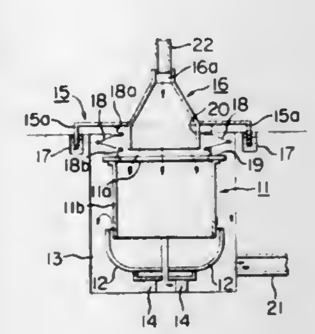

1. In an apparatus for preheating steel scrap, which comprises:
means defining a preheating vessel for receiving and preheating steel scrap, said preheating vessel having an open top and a bottom lid for said preheating vessel, said bottom lid being capable of being opened and closed, said preheating vessel being adapted to receive steel scrap to be preheated through said open top and to discharge the

steel scrap preheated in said preheating vessel by opening said bottom lid;
means defining a downwardly and outwardly flaring hood for covering said open top of said preheating vessel, said hood being removable from said open top of said preheating vessel to permit introduction of high-temperature waste gases discharged from a steel-refining metallurgical furnace into said preheating vessel;
means defining a housing for containing said preheating vessel with a first gap between said housing and said preheating vessel, said preheating vessel including means for discharging waste gases from the bottom thereof into said housing, said housing comprising a duct for discharging to the outside said waste gases discharged into said housing from the bottom of said preheating vessel after preheating said steel scrap received in said preheating vessel; and
means defining a canopy for sealing said first gap between said housing and said preheating vessel housed in said housing, a gap between the periphery of said canopy and said housing being liquid-sealed;
the improvement wherein:
said canopy is gas-tightly fixed to said hood;
a second gap is provided between said canopy and said preheating vessel housed in said housing; and
a sealing means is coupled between said canopy and the upper portion of said preheating vessel for sealing said second gap between said canopy and said preheating vessel, said sealing means being fixed at an end thereof to said canopy.

4,373,912
AIRSTREAM HEATER
Edward J. Mitchell, 225 Stapleton Dr., Prarie Grove, Ark. 72753
Filed Feb. 6, 1981, Ser. No. 232,353
Int. Cl.^{3} F24H *1/00;* **F23M** *9/00;* **F23C** *5/06*
U.S. Cl. 432—222 **5 Claims**

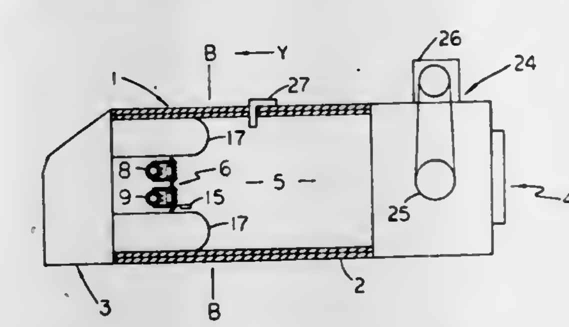

1. A heater for heating an airstream comprising:
(a) a heater housing having an upstream end and a downstream end with an air inlet proximate the upstream end and an air outlet proximate the downstream end and a heating chamber situated between said air inlet and air outlet, said heating chamber having an upstream end and downstream end and a longitudinal axis generally parallel to the direction of air flow through said heating chamber;
(b) a burner situated within the heating chamber proximate the longitudinal axis thereof and proximate the upstream end thereof, said burner having at least one fuel conduit at least one fuel port on each such conduit to direct flow of a combustible substance generally toward the downstream end of said heating chamber, a first baffle means for each said fuel conduit, said first baffle means being adjacent said fuel conduit and extending from the fuel conduit in a direction generally toward the downstream end of the heating chamber then bending back toward the upstream end of the heating chamber and away from said fuel port, a second baffle means for each said fuel conduit said second baffle means being adjacent said fuel conduit at the portion of the fuel conduit where the first baffle means adjoins said fuel conduit and extending from the fuel conduit in a direction generally toward the downstream end of the heating chamber then bending back toward the upstream end of the heating chamber and away from said fuel port, and a tubular member corresponding to each said fuel port mounted between the first baffle means and second baffle means so as to have the passageway through said tubular member aligned with the corresponding fuel port to further direct the combustible substance generally toward the downstream end of said heating chamber, said tubular member having an upstream end and downstream end and being adjustably mounted to allow for adjustment in the direction generally parallel to the longitudinal axis of said heating chamber so that the distance between the upstream end of the tubular member and the fuel conduit of its corresponding fuel port can be varied to allow for varying amounts of air being mixed with said combustible substance with said tubular member;
(c) a fuel line connected to said burner to supply said combustible substance to the burner to be ignited when mixed with the airstream and thereby heat the airstream in the heating chamber; and
(d) airstream movement means to force air into the air inlet through the heating chamber and out the air outlet of the heater housing.

4,373,913
CFC EXPANSION ARCH
James R. McAndrew, 3233 Sherwood Forest Blvd., Suite 202, Baton Rouge, La. 70816
Filed May 15, 1981, Ser. No. 264,036
Int. Cl.^{3} A61C *3/00*
U.S. Cl. 433—7 **3 Claims**

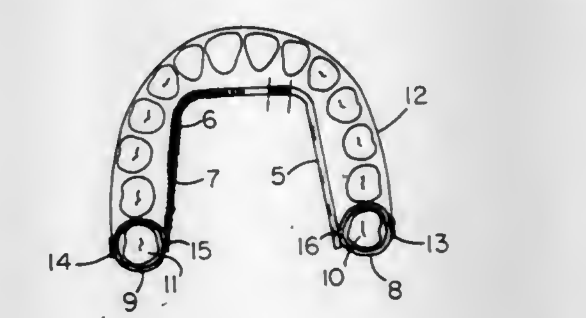

1. A continuous force control arch expander for use in orthodontics comprising:
A. A set of anchor bands for fixed attachment to molar teeth on opposite sides of the arch,
B. a pair of expansion wires rigidly and tangentially attached one each to said anchor bands having means for placement of a continuous expansion force against the interior surface wall of teeth, and
C. a control wire fixedly attached at its opposite ends to said anchor bands in a position to be fitted about the outside of the tooth line.

4,373,914
ORTHODONTIC DEVICE
Earl J. Colbert, 3696 Montego Dr., Huntington Beach, Calif. 92649
Filed Oct. 30, 1981, Ser. No. 316,764
Int. Cl.^{3} A61C *7/00*
U.S. Cl. 433—18 **3 Claims**

1. An orthodontic device comprising a bracket connected to a tooth, an arch wire associated with said bracket, a rod shaped

rotator with a ligature wire for attaching said rotator and connecting the rotator adjacent said bracket and between said

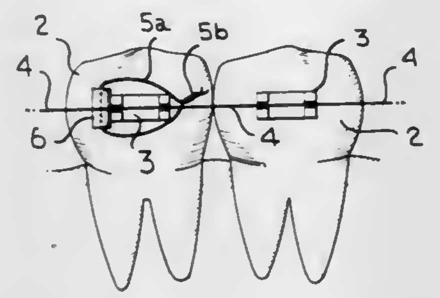

arch wire for holding said rotator securely for permitting rotation of the tooth.

4,373,915
IATROGENIC SHIELD
Herold E. Comstock, Rte. 4, Box 35-A, Winchester, Va. 22601
Filed Nov. 2, 1981, Ser. No. 316,994
Int. Cl.³ A61C *5/14*
U.S. Cl. 433—136 **6 Claims**

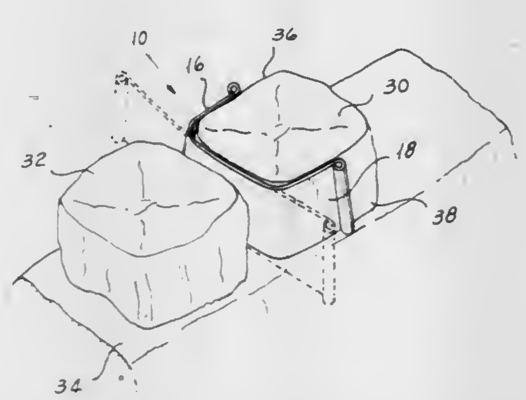

1. A shield comprising a resilient band having a front portion adapted to be placed against the interproximal surface of a tooth and two side portions, said band being biased so that said side portions hug the buccal and lingual surfaces of said tooth, and loops at the ends of said sides for receiving elements of a tool adapted to spread said sides to facilitate placement and removal of said shield.

4,373,916
WEAPON EFFECT SIMULATORS
David W. Ashford, and Robert Hummel-Newell, both of Farnborough, England, assignors to The Solartron Electronic Group Limited, Farnborough, England
PCT No. PCT/GB80/00092, § 371 Date Jan. 8, 1981, § 102(e) Date Jan. 8, 1981, PCT Pub. No. WO80/02741, PCT Pub. Date Dec. 11, 1980
PCT Filed May 22, 1980, Ser. No. 229,602
Claims priority, application United Kingdom, May 25, 1979, 7918367
Int. Cl.³ F41G *3/26*
U.S. Cl. 434—22 **6 Claims**

1. A weapon effect simulator having a projector arranged to project a beam of electromagnetic radiation during simulated firing of a weapon and a detector arranged to detect incidence of said radiation thereupon, characterised in that:
aid projector is arranged to generate at least one burst of radiation for each said firing, said burst being of predetermined duration and being modulated at a predetermined frequency; and in that
said detector includes frequency-selective means tuned to a frequency harmonically related to said predetermined fre-

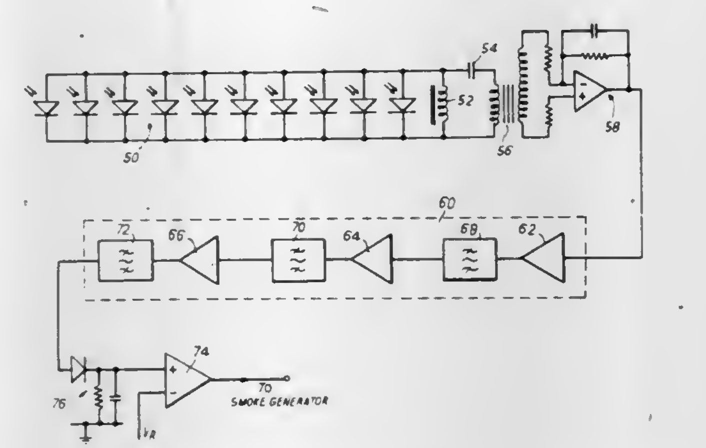

quency and having a pass band dependent upon said predetermined duration.

4,373,917
EDUCATIONAL DEVICE FOR TEACHING ARITHMETICAL OPERATIONS
Priscilla H. Jackson, 824 Dorian Rd., Westfield, N.J. 07090
Filed May 28, 1981, Ser. No. 267,752
Int. Cl.³ G09B *1/06, 19/02*
U.S. Cl. 434—209 **10 Claims**

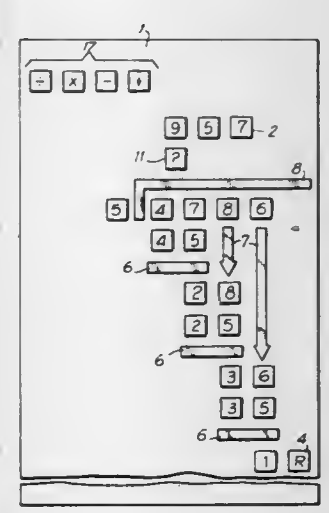

1. An educational device for teaching large division and multiplication operations which comprises in combination:
(a) a graph-like base member having a set of 4 symbols positioned in the upper region thereof, said symbols consisting of a division symbol, a multiplication symbol, a subtraction symbol and a downwardly pointing arrow;
(b) a plurality of movable numbers to be applied onto said graph-like base member and having depicted on at least one main surface thereof numerals from 0 through 9, pre-established letters of the alphabet, punctuation symbols or mathematical process signs;
(c) a plurality of bars of predetermined length and having a width equal to at least about one-third the width of said movable members, at least one of said bars being longer than the others and having an L-shaped configuration;
(d) a plurality of arrow-like members of varied length and of width substantially equal to the width of said bars.

4,373,918
AUDIO-VISUAL, CHILD-PARTICIPATING EDUCATIONAL ENTERTAINMENT CENTER
Mort Berman, Brooklyn, N.Y., assignor to Avalon Industries, Inc., Brooklyn, N.Y.
Filed Apr. 13, 1981, Ser. No. 253,651
Int. Cl.³ G09B *5/06;* A63H *33/14;* G03B *21/10*
U.S. Cl. 434—307 **9 Claims**

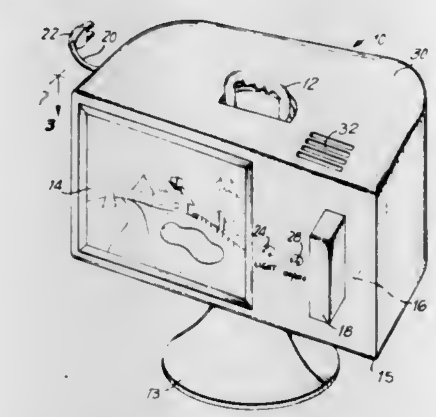

1. An audio-visual, child-participating, educational entertainment center, comprising:
(a) a screen;
(b) kit means including a plurality of applique means each being strippably adherable to the screen when applied thereto;
(c) video means for displaying a series of sequential visual displays on the screen to constitute an animated feature which is viewable by a child;
(d) audio means for generating sound accompaniment for the animated feature, said sound accompaniment including narrated instructions directing the child to apply the applique means to the screen; and
(e) pace-setting means for stopping the sound accompaniment and animated feature at any desired one of the visual displays for a variable time interval, each time interval being different for each child and being dependent on the level of skill of the respective child, said time interval being of time duration sufficient to permit the respective child to apply the applique means to the stopped visual display displayed on the screen at his or her own pace in accordance with the narrated instructions, said pace-setting means being further operative for thereafter restarting the animated feature and sound accompaniment when the child has completed the application of the applique means to the screen,
whereby each child can interact with the narrated instructions at his or her own pace.

4,373,919
MULTI-PASSAGE VARIABLE DIFFUSER INLET
Maynard L. Stangeland, Thousand Oaks, Calif., assignor to Rockwell International Corporation, El Segundo, Calif.
Filed Nov. 17, 1980, Ser. No. 207,116
Int. Cl.³ B63H *11/04*
U.S. Cl. 440—47 **4 Claims**

1. An inlet for a marine jet propulsion system comprising:
a lip member having one end thereof pivotally connected to the hull of a vessel;
a center splitter serving to divide said inlet into upper and lower passages;
positioning means for moving said splitter in a manner proportional to the movement of said lip to assure equality of the areas and diffusion of said upper and lower passages; and

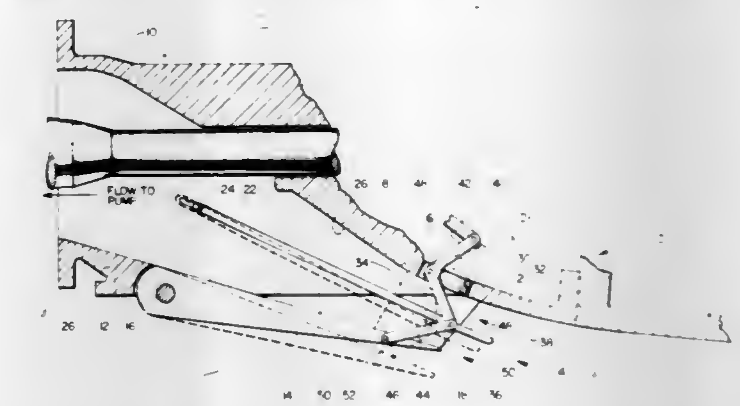

means for varying the outward projection of said splitter to vary the inlet velocity recovery of said upper and lower passages.

4,373,920
MARINE PROPULSION DEVICE STEERING MECHANISM
Charles B. Hall, Ingleside; Edward D. McBride, Waukegan, both of Ill., and Robert F. Young, Kenosha, Wis., assignors to Outboard Marine Corporation, Waukegan, Ill.
Filed Jul. 28, 1980, Ser. No. 173,158
Int. Cl.³ B63H *21/26*
U.S. Cl. 440—59 **38 Claims**

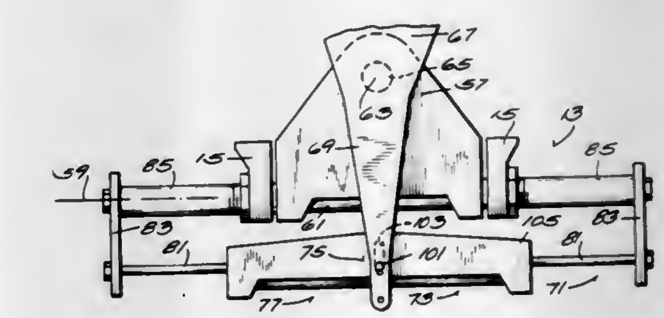

37. A marine propulsion device comprising a bracket adapted to be fixed relative to a boat transom, a propulsion unit including a steering arm, means pivotally connecting said bracket and said propulsion unit for vertical swinging movement of said propulsion unit about a first axis which is located below said steering arm and which is substantially horizontal when said bracket is boat mounted, and for swinging movement of said propulsion unit about a steering axis which is generally transverse to the first axis, a support member, spaced means supporting said support member so that said support member is located in spaced parallel relation to said first axis and is retained against movement axially of said first axis while permitting movement of said support member in an arc about said first axis in common with vertical swinging movement of said propulsion unit, a traveling member carried by said support member for movement therealong in directions parallel to said first axis, means connecting said traveling member and said steering arm for applying force to said steering arm so that said steering arm swings said propulsion unit about the steering axis in response to movement of said traveling member along said support member, and means on said support member and on said traveling member for reaction therebetween so as to selectively displace said traveling member along said support member to thereby steer said propulsion unit.

4,373,921
OUTBOARD MOTOR WITH SEQUENTIALLY OPERATING TILT AND TRIM MEANS
Charles B. Hall, Ingleside; Edward D. McBride, Waukegan, both of Ill., and Robert F. Young, Kenosha, Wis., assignors to Outboard Marine Corporation, Waukegan, Ill.
Filed Jul. 28, 1980, Ser. No. 173,160
Int. Cl.[3] B63H *21/26*
U.S. Cl. 440—61 **7 Claims**

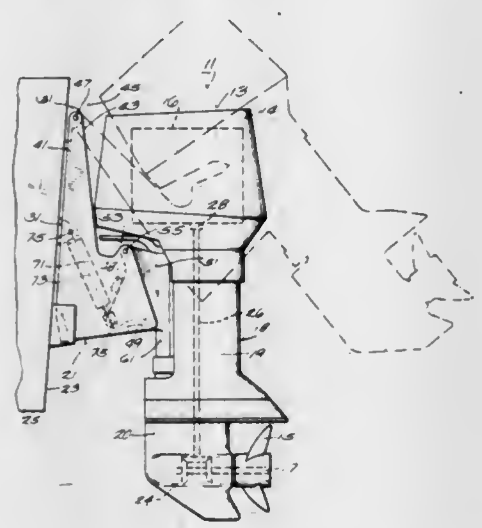

7. A marine propulsion device comprising a transom bracket means adapted to be connected to a boat transom, a stern bracket having an upper end, first pivot means connecting said upper end of said stern bracket to said transom bracket means for pivotal movement of said stern bracket relative to said transom bracket means about a first pivot axis which is horizontal and rearward of the transom when said transom bracket means is boat mounted, a swivel bracket, second pivot means connecting said swivel bracket to said stern bracket in spaced relation from said first pivot means and for pivotal movement of said swivel bracket relative to said stern bracket about a second pivot axis parallel to said first pivot axis, a propulsion unit including, at the lower end thereof, a rotatably mounted propeller, means connecting said propulsion unit to said swivel bracket for steering movement of said propulsion unit relative to said swivel bracket about a generally vertical axis and for common pivotal movement with said swivel bracket in a vertical plane about said first and second horizontal axes, and means for sequentially pivotally displacing said swivel bracket and connected propulsion unit about said second pivot axis and then about said first pivot axis.

4,373,922
OUTBOARD PROPULSION GEARCASE
Lyle E. Weed, Van Dyne, Wis., assignor to Brunswick Corporation, Skokie, Ill.
Filed Apr. 21, 1980, Ser. No. 142,578
Int. Cl.[3] B63H *1/20*
U.S. Cl. 440—89 **8 Claims**

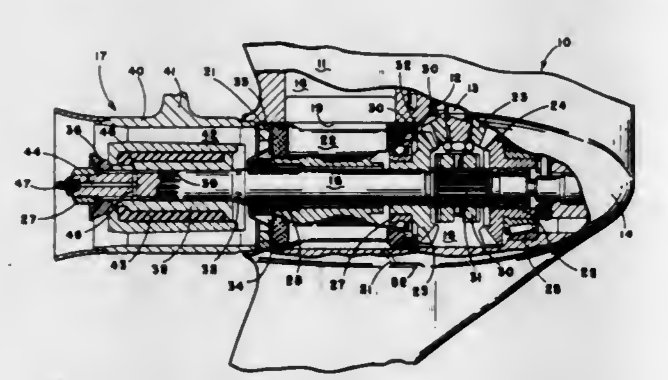

1. An engine driven outboard drive unit for attachment to a watercraft, comprising:

(A) a housing having a downwardly extending exhaust passage and a generally cylindrical horizontal bore which opens aft of said housing and receives exhaust gases from said passage;

(B) a propeller shaft mounted for rotation in said bore;

(C) a propeller mounted on said shaft at the aft end of said bore; and

(D) a bearing support member mounted in fixed relationship to said bore to support said shaft and to direct the exhaust gases rearwardly from said bore, said bearing support member and said bore having surfaces engaging each other to radially position said member in said bore, said engaging surface of said bearing support member having an array of depressions formed by a plurality of intersecting ridges and acting with said engaging surface of said bore to form closed pockets to retain lubricant between the engaging surfaces.

4,373,923
TORQUE LIMITING OVERLOAD COUPLING
Thomas C. Kilwin, Bridgeton, Mo., assignor to UMC Industries Inc., St. Louis, Mo.
Filed Dec. 14, 1979, Ser. No. 103,844
Int. Cl.[3] F16D *7/02*
U.S. Cl. 464—36 **20 Claims**

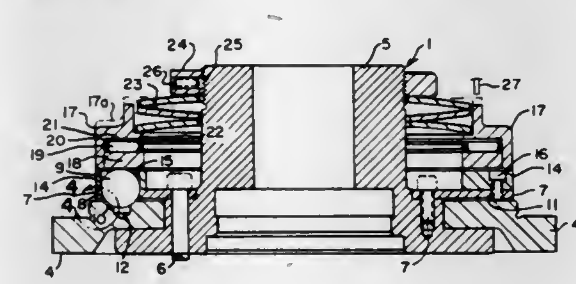

1. A torque limiting coupling assembly for use in retaining driving and driven means together during normal usage of machinery but effecting disconnection of said means when a maximum predetermined torque is exceeded, a rotating member for said assembly included in said driving means, a rotatable member included within said driven means of the assembly, the improvement which comprises, detent means, cooperating detent seats provided upon the rotatable member and for use in seating the said detent means, said detent means when seated within the said detent seats effecting a simultaneous turning of said driven means by the driving means during routine operation of the machinery and with the exertion of excessive torque causing an unseating of the detent means from within their seats and an incident reduction in the rotation of said driven means, a detent means suspension plate connecting within said rotating member of the driving means and providing for supporting said detent means for normal seating within the rotatable member seats, both the detent means support by the suspension plate and the detent seats of the rotatable member normally being in contact with the detent means only on that side of the detent means in contact with the said rotatable member.

4,373,924
TORQUE LIMITING CLUTCH
Ernst Schuhmacher, Bad Homburg, Fed. Rep. of Germany, assignor to Deere & Company, Moline, Ill.
Filed Jul. 1, 1980, Ser. No. 164,870
Claims priority, application Fed. Rep. of Germany, Aug. 4, 1979, 2931732
Int. Cl.[3] F16D *19/00*
U.S. Cl. 464—38 **9 Claims**

1. A rotary transmission assembly including a torque limiting slip clutch comprising:

a first transmission member having an at least partially radially extending clutch face including a clutching surface;

a second transmission member supported by and rotatable relative to the first transmission member and including an at least partially radially extending clutch face including a clutching surface disposed radially outward of and of substantially the same clutching characteristics as the clutching surface of the first transmission member;

a clutch element having a clutch face facing the respective clutch faces of the first and second transmission members and including a clutching surface having inner and outer portions for mating respectively with the clutching surfaces of the first and second transmission members said mating including axially overlapping engagement of the respective surfaces; and

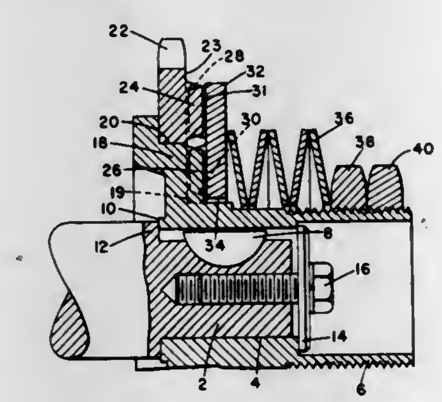

means for biasing the clutch element axially so that the respective clutching surfaces engage for transmitting torque between the first and second transmission members by way of the clutch element, the nature of the clutching surfaces being such that said torque transmission results in an axial separating force tending to axially separate and disengage the clutching surfaces of the clutch element from those of the transmission members and deflectably resisted by the bias means and so that, at a predetermined torque, the separation is such that at least one of the mating pairs of clutching surfaces disengage, permitting relative rotational movement between the first and second transmission elements.

4,373,925
ELASTIC COUPLING
Kurt G. Fickelscher, Herderstr. 19, 671 Frankenthal, Pfalz, Fed. Rep. of Germany
Continuation-in-part of Ser. No. 943,358, Sep. 18, 1978, abandoned. This application Jun. 23, 1980, Ser. No. 162,129
Claims priority, application Fed. Rep. of Germany, Sep. 21, 1977, 2742442; Jun. 21, 1979, 2924935
Int. Cl.[3] F16D *3/54*
U.S. Cl. 464—158 **29 Claims**

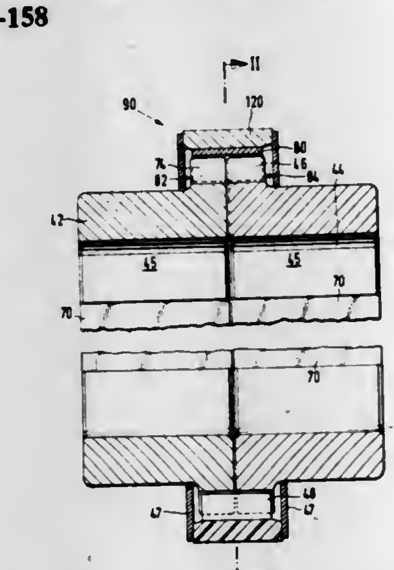

1. In an elastic coupling with two similar central gears assemblable on respective shaft ends and having rows of teeth, respectively, disposed adjacent one another, and a planet gear with a row of teeth having an angular pitch equal to that of the rows of teeth of the central gears and engaging in tooth gaps of the central gears, the central gears being turnable elastically resiliently so that the flanks of the teeth of the central gears form generally wedge-shaped virtual tooth gaps having a profile varying with reciprocal turning of the central gears, the improvement therein which comprises the teeth of the central gear having flanks with planar surfaces, the teeth of the planet gear being rigid individual slide members, and being slidable in radial direction on the planar tooth flanks of the teeth of the central gears during load variation, and the planet gear containing spring means effective in radial direction, for spring-biasing the individual teeth of the planet gear radially into the appertaining tooth gaps.

4,373,926
AUTOMATIC TRANSMISSION HAVING A CONTINUOUSLY VARIABLE DRIVE RATIO
Robert L. Fullerton, P.O. Box 4119, Incline Village, Nev. 89450
Filed Jul. 21, 1980, Ser. No. 170,529
Int. Cl.[3] F16H *55/54*
U.S. Cl. 474—57 **2 Claims**

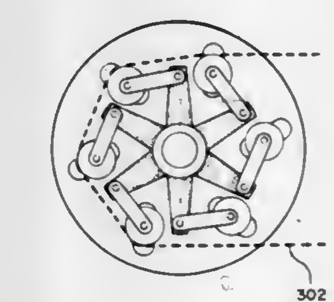

1. Automatic transmission apparatus for providing a continuously variable drive ratio comprising:

a pair of outer plates to which torque may be applied;

a sprocket support structure lying between the outer plates including a star wheel having a plurality of pairs of projections, each pair of projections carrying a pair of axle support arms;

bias means connected to the outer plates and to the sprocket structure for providing a rotational force between the outer plates and the sprocket support structure to vary the relative positions of the outer plates and the sprocket support structure in response to an applied torque; and

a plurality of sprocket wheels each having an axle, each axle being supported at two spaced apart locations along the axle's length by one of the pairs of axle support arms, the sprocket wheels being regularly spaced along the circumference of a circle defined by the positions of the sprocket wheel axles, the radius of the circle being continuously varied by the relative motion of the sprocket support structure and the outer plates.

4,373,927
TWO SPEED TRANSMISSION
John T. McKinley, Anderson, S.C., assignor to Foundry & Steel, Inc., Anderson, S.C.
Filed Aug. 25, 1980, Ser. No. 181,137
Int. Cl.[3] F16H *9/00*
U.S. Cl. 474—74 **3 Claims**

1. A two-speed transmission comprising:

an input shaft,

a slow speed input pulley carried on and being fixed to said input shaft,

a high speed input pulley having a diameter greater than said slow speed pulley carried on and being fixed to said input shaft,

an output shaft,

an overrunning clutch carried on said output shaft;

a slow speed output pulley carried by said overrunning clutch,

a selectively engageable clutch carried on said output shaft,
a high speed output pulley carried by said selectively engageable clutch having a smaller diameter than said slow speed pulley carried by said overrunning clutch,
first and second idle pulleys,
said first timing belt extending around said slow speed input pulley and said first idle pulley with said teeth on said inner surface engaging said slow speed input pulley and said idle pulley, and said teeth on said outer surface being in driving engagement with said low speed output pulley,
said second timing belt extending around said high speed input pulley and said second idle pulley with said teeth on an inner surface engaging said high speed input pulley and said idle pulley and said teeth on said outer surface being in driving engagement with said high speed output pulley,

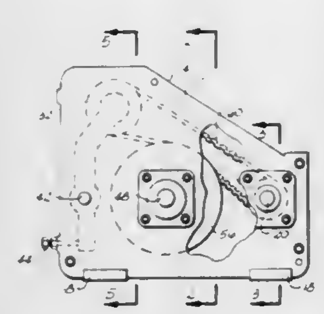

a pair of pivotal arms;
each of said idle rolls being supported adjacent an end of a respective pivotal arm, and
adjustable means associated with said pivotal arms for tensioning said timing belts and maintaining the run of said belts substantially linear,
whereby when said input shaft is rotated at a constant speed, said output shaft can be selectively driven in an opposite direction at two distinct speeds either engaging or disengaging said selectively engageable clutch.

4,373,928

METHOD OF MAKING COMPOSITE CONTAINER WITH COMPRESSED BODY WALL

John D. Horton, Hartsville, S.C., assignor to Sonoco Products Company, Hartsville, S.C.
Filed Feb. 13, 1981, Ser. No. 234,191
Int. Cl.[3] B31B *49/02*

U.S. Cl. 493—103 4 Claims

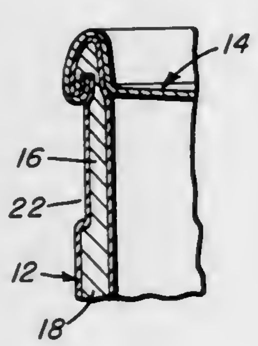

1. A method of forming a composite container for facilitating accommodation of the cutting blade and drive wheel of a conventional can opener, said method comprising the steps of forming a tubular composite body of constant internal diameter with opposed open ends, compressing a section of the wall of the body circumferentially about said body adjacent one of said ends and along a portion of the length of the body inwardly from said one of said ends while retaining the constant internal diameter of said body between said open ends and prior to any further end forming operation and in a manner defining a peripheral recess externally about said body, subsequently positioning a flanged metal end cap over said one of said ends, and forming the flange of the end cap and the compressed section adjacent said one of said ends into an interlocked seam permanently engaging said cap to said body.

4,373,929

METHOD AND APPARATUS FOR CUTTING AND SCORING FOLDING CONTAINER BLANKS

Paul W. Smith, 2351 N. 92nd, Omaha, Nebr. 68134
Continuation of Ser. No. 5,267, Jan. 22, 1979, abandoned. This application Sep. 18, 1980, Ser. No. 188,331
Int. Cl.[3] B31B *1/20, 1/25*

U.S. Cl. 493—355 7 Claims

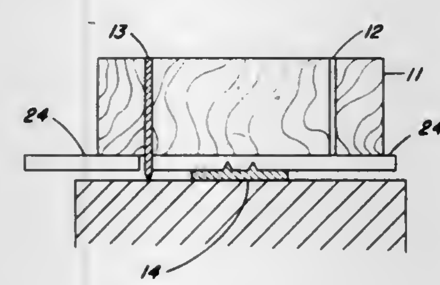

1. A method for cutting blanks from rigid and semi-rigid material and scoring the blanks to provide creaseless fold lines, comprising,
providing a die face having knife edges protruding therefrom defining the general outline of a blank to be cut,
providing an elongated generally thin flat score forming material having at least two closely spaced substantially parallel ridges protruding from one surface thereof,
aligning and supporting said score forming material on said die face within the general outline defined by said knife edges and with said one surface and ridges of the score forming material facing said die face,
aligning a flat platen with said die face,
moving said die face and platen together thereby engaging said score forming material with said platen,
transferring said score forming material onto said platen in mirror image alignment,
separating said die face and platen,
placing material to be cut and scored between the die face and platen, and
moving said die face and platen together thereby penetrating said knife edges into one side of the material to be cut and scoring the opposite side thereof.

4,373,930

AQUEOUS DISPERSIONS OF COLORING MATERIALS: POLY-ALKYLENEOXY NAPHTHALENE DISPERSING AGENTS

Geoffrey R. Rothwell, Chadderton, England, assignor to Imperial Chemical Industries Limited, London, England
Continuation of Ser. No. 184,974, Sep. 8, 1980, abandoned. This application Sep. 15, 1981, Ser. No. 302,397
Claims priority, application United Kingdom, Oct. 3, 1979, 7934326
Int. Cl.[3] D06P *67/00*

U.S. Cl. 8—527 7 Claims

1. An aqueous dispersion of a finely-divided, inorganic or non-ionic, organic solid selected from the groups consisting of disperse dyestuffs, pigments, optical brightening agents and anthraquinone, containing a water-soluble, non-ionic dispersing agent which comprises naphthalene carrying, in the alpha or the beta position, a water-solubilising poly(C_2 to C_4 alkyleneoxy) chain containing from 5 to 15 C_2 to C_4 alkyleneoxy groups and otherwise free from substituents.

4,373,931

METHOD OF MEASURING AGGLUTINATING REACTION AND A REACTION VESSEL THEREFOR

Hiroshi Takekawa, Kunitachi, Japan, assignor to Olympus Optical Company Limited, Tokyo, Japan
Filed Oct. 3, 1980, Ser. No. 193,625
Claims priority, application Japan, Oct. 9, 1979, 54-130280
Int. Cl.[3] G01N *31/02, 1/10, 35/00*

U.S. Cl. 436—539 13 Claims

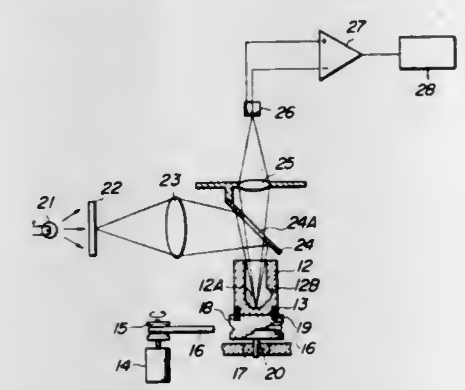

1. In a method of measuring an agglutination reaction by detecting an agglutination pattern due to an immunological agglutination reaction, the improvement comprising the steps of
introducing a reaction liquid containing corpuscles into a reaction vessel having a bottom and at least one recess formed in an inner sidewall thereof and smoothly communicated with the bottom;
rotating said reaction vessel about an axis thereof to collect at least a part of the reaction liquid in said recess for accelerating the agglutination reaction;
stopping the rotation of the reaction vessel to release the reaction liquid including agglutinated or non-agglutinated corpuscles from said recess into the bottom of the vessel due to gravity;
mixing the corpuscle-containing liquid with the reaction liquid contained in the bottom of the vessel so that, in case of agglutination, the agglutinated corpuscles settle on the bottom without being separated from each other, whereas in case of non-agglutination, the corpuscles are suspended in the reaction liquid; and
detecting the agglutination pattern formed on the bottom by the settled corpuscles.

8. A reaction vessel for measuring an agglutination reaction comprising:
a substantially tubular member comprising a cylindrical body having a side wall and a longitudinal axis;
an opening provided at an upper end of the cylindrical body;
a bottom wall having a generally concave inner bottom surface; and
a recess formed in said side wall, said recess having an inner surface which extends from the inner surface of the side wall of the cylindrical body, said recess having a central axis which is substantially perpendicular to the longitudinal axis of the cylindrical body for facilitating gravity flow of fluid from said recess back to said inner bottom surface.

4,373,932

APPLICATION OF WATER-DISPERSIBLE HYDROPHOBIC DYES OR PIGMENTS AS LABELS IN IMMUNOASSAYS

Thomas C. J. Gribnau, Haren; Frits Roeles, Dreumel, and Johannes H. W. Leuvering, Heesch, all of Netherlands, assignors to Akzona Incorporated, Asheville, N.C.
Filed Jan. 2, 1981, Ser. No. 222,263
Claims priority, application Netherlands, Jan. 11, 1980, 8000173
Int. Cl.[3] G01N *33/54, 33/58, 33/76, 33/74*

U.S. Cl. 436—501 65 Claims

1. A process for the qualitative and/or quantitative determination of an immunochemically reactive component selected from the group consisting of a hapten, antigen, and antibody in an aqueous test medium using the immunochemical reactivity of said component comprising:
(1) providing a known amount of at least one labelled immunochemically reactive component obtained by the direct or the indirect attachment of an immunochemically reactive component to particles of an aqueous dispersion of (a) a hydrophobic dye or pigment or (b) polymer nuclei coated with said dye or pigment, said particles having a particle size of at least 5 nm;
(2) providing at least one non-labelled immunochemically reactive component;
(3) mixing said components (1) and (2) with a sample containing said test medium;
(4) allowing the immunochemical reaction to proceed to form free and bound labelled component(s);
(5) optionally separating the free and bound labelled component(s) in the test medium or in one of the fractions obtained after separation; and
(6) determining the nature and/or the quantity of the dye or pigment, said determination providing a qualitative and/or quantitative indication of the immunochemically reactive component(s) to be determined.

9. A test kit for the determination of one or more immunochemically reactive components in an aqueous medium, comprising:
(a) a known amount of at least one labelled immunochemically reactive component obtained by the direct or indirect attachment of an unlabelled immunochemically reactive component to particles of an aqueous dispersion of (i) a hydrophobic dye or pigment or (ii) polymer nucleic coated with said dye or pigment, said particles having a particle size of at least 5 nm,
(b) other immunochemical reagents, and
(c) directions for use of said test kit.

10. An immunochemical reagent consisting of an aqueous dispersion of particles of (a) a hydrophobic dye or pigment or (b) polymer nuclei coated with said dye or pigment directly or indirectly attached to an immunochemically reactive component, said particles having a particle size of at least 5 nm.

4,373,933

METHOD OF PRODUCING PRECISION ABRASIVE TOOLS

Alfred E. Grazen, 368 S. Main St., Deep River, Conn. 06417
Filed May 15, 1981, Ser. No. 264,132
Int. Cl.[3] C09C *1/68*

U.S. Cl. 51—309 10 Claims

1. A method of making a precision abrasive tool, which comprises

(a) depositing loose diamond particles in a metallic mold having an inner annular surface in an amount which is in excess of the number of particles needed to cover the inner annular surface of said mold.
(b) rotating said mold about its horizontal axis to spread said diamond particles evenly over the inner annular surface of said mold by centrifugal force rotating means,
(c) distributing by an electrolytic distributing means an electrolytic solution containing a metal into the rotating mold,
(1) wherein the mold annular surface has a negative charge forming a cathode.
(2) wherein the electrolytic solution distributing means has a positive charge forming an anode.

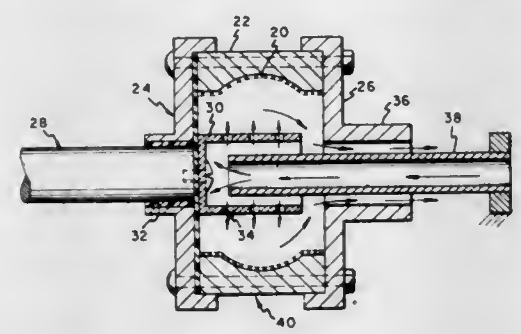

(d) forming a solidified matrix of metal by electrolytic deposition around the diamond particles on the inner annular surface of said mold,
(e) removing the diamond particles which are not contained within said matrix,
(f) continuing the buildup of the matrix to the desired thickness by electrolytic deposition,
(g) removing the mold from the rotating means, and introducing core material into the mold as backup for said matrix,
(h) machining the core material to desired dimensions,
(i) separating the mold from said matrix with the diamond particles and core material.

4,373,934
METAL BONDED DIAMOND AGGREGATE ABRASIVE
Stephen C. Hayden, Columbus, Ohio, assignor to General Electric Company, Worthington, Ohio
Filed Aug. 5, 1981, Ser. No. 290,131
Int. Cl.³ B24D *3/02*
U.S. Cl. 51—309 **5 Claims**

1. An improved aggregated abrasive particle comprising diamond particles held in a silver/copper alloy metal bond matrix which contains titanium as a wetting agent for diamond, wherein the improvement comprises those aggregates in which:
(a) the particle size of the diamonds, on the average, is less than or equal to 53 microns;
(b) the diamonds are characterized as milled saw diamond; and
(c) the meta bond matrix comprises 64 to 78 weight percent of the aggregate.

4,373,935
ADSORPTION SEPARATION CYCLE
Joseph P. Ausikaitis, White Plains, and Desh R. Garg, Hopewell Junction, both of N.Y., assignors to Union Carbide Corporation, Danbury, Conn.
Filed May 1, 1981, Ser. No. 259,377
Int. Cl.³ B01D *53/04*
U.S. Cl. 55—33 **11 Claims**

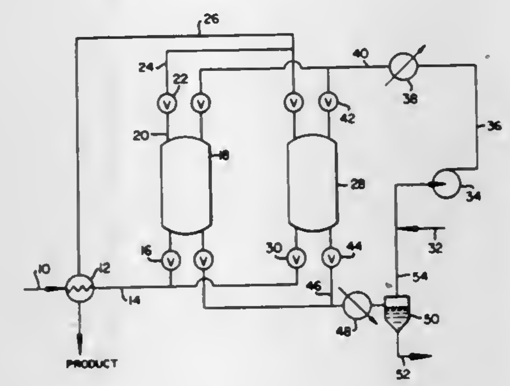

1. Adsorption separation process which comprises;
(a) passing in the vapor phase a feedstock comprising at least 2.5 weight percent water in admixture with at least one organic molecular species into a fixed adsorption bed at a temperature and pressure which prevents the capillary condensation of said organic molecular species, said fixed adsorption bed containing an adsorbent mass consisting essentially of a crystalline zeolitic molecular sieve adsorbent, small enough to substantially exclude the said organic molecular species, moving the water adsorption mass transfer front and the coinciding or trailing heat front created in said fixed bed along said bed toward the effluent end thereof to a predetermined point short of breakthrough of either of said fronts, at least that portion of said molecular sieve adsorbent contacted by said water mass transfer front containing adsorbed thereon, prior to and at the time of contact of said front, at least about 2 weight percent water, said molecular sieve adsorbent having a capacity for the adsorption of water under the imposed operating conditions greater than the water loading thereon at the time of contact by the water mass-transfer front;
(b) from the effluent end of said bed, recovering a product stream containing a lower concentration of water than the feedstock;
(c) terminating the flow of feedstock into said bed prior to breakthrough of either of the heat front and the water mass transfer front, and prior to substantial loss of the heat energy from the bed, commencing the countercurrent passage through said bed of an essentially non-sorbable purge gas at a temperature within about 25° F. of the temperature of, and substantially at the same pressure as, the feedstock entering the bed during adsorption step (a), said temperature and pressure being sufficient to prevent capillary condensation of the said organic molecular species of said feedstock, whereby said heat front is moved back through said bed and utilized in desorbing water from the adsorbent mass;
(d) continuing the countercurrent purging of said bed until the water loading on said adsorbate is essentially the same as at the beginning of adsorption step (a), and
(e) repeating adsorption step (a).

4,373,936
FILTER BAG TENSIONING DEVICE AND METHOD
Andrew R. Becker, Ellicott City, Md., assignor to Koppers Company, Inc., Pittsburgh, Pa.
Filed Aug. 6, 1980, Ser. No. 175,376
Int. Cl.³ B01D *46/00*
U.S. Cl. 55—97 **17 Claims**

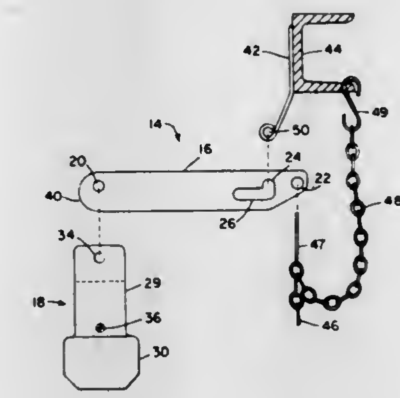

1. A method of attaching and replacing a filter bag in a bag house in which an elongated lever is pivotally supported intermediate its ends at a desired pivot point by a pivot affixed within the upper reaches of said bag house and said lever is provided with filter bag support means adjacent one end and a weight and weight securement means adjacent its other end comprising, rotating the weight securement end of said lever to a generally vertical disposition, moving the bag support end of said lever generally vertically downward, attaching a filter bag to the filter bag support means, rotating the weight securement end of said lever to a generally lateral position relative to said pivot and displacing said lever to said desired pivot point and, when said filter bag is to be replaced, repeating the above sequence of steps with removal of the existing filter bag and attachment of a new filter bag.

4,373,937
ELECTROSTATIC PRECIPITATOR WITH MODULAR CABINET AND CELL WASHER
James A. Krause, Harrison, Ark., and Edward A. Kitsch, Kirkwood, Mo., assignors to Emerson Electric Co., St. Louis, Mo.
Continuation of Ser. No. 838,205, Sep. 30, 1977, abandoned. This application Apr. 26, 1979, Ser. No. 33,465
Int. Cl.³ B03C *3/78, 3/82*
U.S. Cl. 55—118 **3 Claims**

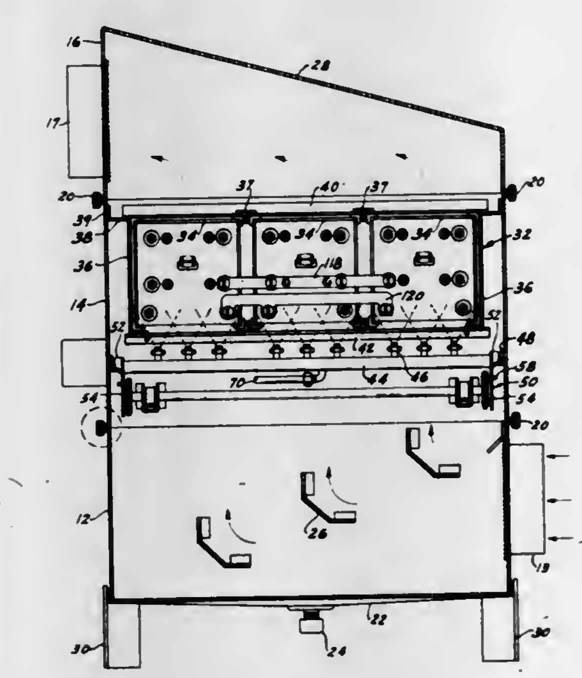

1. An electrostatic air cleaner comprising a cabinet having three vertically arranged and detachably connected sections, said sections being square in plan with four sidewalls of equal horizontal length, the upper of said sections having a top wall and an outlet opening in one sidewall thereof, the lower of said sections having a bottom wall and an inlet opening in one sidewall thereof, and the intermediate of said sections having an access opening in one sidewall thereof provided with at least one door for closing said opening, and said inlet and outlet openings being surrounded by flanges, means in said intermediate cabinet section slidably receiving a plurality of electrostatic precipitator cells which cells are enterable and removable through said access opening, the horizontal meeting edges of said cabinet section sidewalls being formed horizontally to provide meeting flanges, and means detachably connecting said meeting flanges whereby said lower inlet section and said upper outlet section may be assembled to said intermediate section with their respective inlet and outlet openings facing in any one of four directions with respect to said access opening in said intermediate section.

4,373,938
MODULAR INDUSTRIAL OXYGEN CONCENTRATOR
Norman R. McCombs, Tonawanda, N.Y., assignor to Greene & Kellogg, Incorporated, Tonawanda, N.Y.
Filed Sep. 11, 1981, Ser. No. 301,292
Int. Cl.³ B01D *53/04*
U.S. Cl. 55—160 **39 Claims**

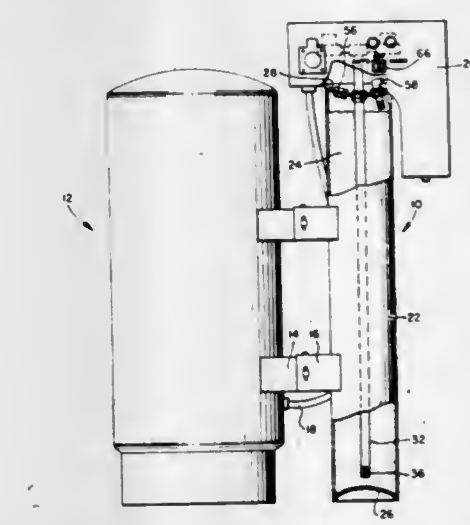

1. A machine for carrying out a pressure swing adsorption cycle for separating a selected gas out of a mixture of gases, said machine being built up of pre-assembled modules, said machine comprising a combined separation and control module adapted to output gas enriched in said selected gas, said combined separation and control module comprising at least one separation means adapted to separate said selected gas from said mixture, a pre-assembled valve and flow conduit module, means to mount said valve and flow conduit module on and in gas flow communication with said separation means, wherein said separation means comprises at least one pressure tank of generally elongated cylindrical configuration, and said tank comprising an inverted domed end member formed with a plurality of openings.

20. A machine for carrying out a pressure swing adsorption cycle for separating a selected gas out of a mixture of gases, said machine comprising at least one pre-assembled module comprising a combined bed and control module adapted to output gas enriched in said selected gas, said combined bed and control module comprising at least one separation means adapted to separate said selected gas from said mixture of gases, said bed and control module comprising housing means enclosing the control position of said at least one bed and control module, said housing means comprising a housing and a lid, means to removably mount said lid onto said housing in an airtight manner, means to deliver said mixture of gases to said separation means at a pressure greater than ambient atmospheric pressure, said housing being formed with an opening communicating the space inside said housing with the ambient

atmosphere, and said separation and control module comprising means to vent gases other than said selected gas inside said housing, whereby the space inside said housing is at a pressure of said ambient atmosphere.

4,373,939
AIR-FILTER VACUUM SWEEP APPARATUS
Craig F. Limbocker, P.O. Box 486, Sandy, Oreg. 97055
Filed Jul. 20, 1981, Ser. No. 285,151
Int. Cl.^{3} B01D *46/04*
U.S. Cl. 55—287 **7 Claims**

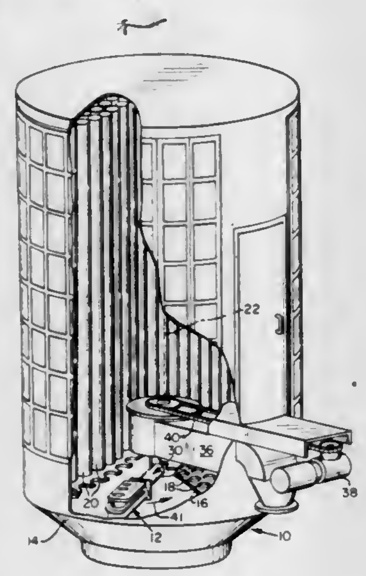

7. An air-filter system including a plate having an array of openings, and a plurality of filter bags mounted on one side of said plate and communicating with said openings, wherein the improvement comprises,
a vacuum arm assembly mounted for recurrent movement over the other side of said plate, said assembly having an air-flow conduit terminating at one end in a port,
a vacuum head adapted for successive fluid-communicative registries with different ones of said openings, with such recurrent movement of said arm assembly, said vacuum head including a conduit head section having a mouth and throat, and
articulation means operatively coupling said head and said arm assembly enabling multidirectional articulation of the head relative to the assembly to accommodate pressure-biased sealed registry between said head and said openings with the arm and said plate in different relative positions, said articulation means including a flexible, fluid-tight skirt joining said port in said assembly in sealed fluid communication with said throat in said head section, said skirt accommodating limited multidirectional movement of said head section with respect to said assembly, and biasing means interposed between said assembly and said head section for biasing said head sections toward said other side of said plate.

4,373,940
AIR PRECLEANER FOR INTERNAL COMBUSTION ENGINE
Ross K. Petersen, Burleson, Tex., assignor to Medalie Manufacturing Co., Minneapolis, Minn.
Filed Jan. 29, 1982, Ser. No. 343,895
Int. Cl.^{3} B01D *45/12*
U.S. Cl. 55—328 **10 Claims**

1. An air precleaning device, having in combination
a substantially cylindrical housing,
a directional hood structure carried by said housing having a chamber therein to the full extent thereof,
said hood having a relatively large inlet,
a louvered member forming said inlet,
a separation chamber within said housing underlying said hood structure,
an unrestricted passage between said chamber and said separation chamber,
a discharge chamber within said housing underlying said separation chamber,
a vane assembly carried by said housing disposed within said separation chamber centrifuging the air stream passing through said housing,

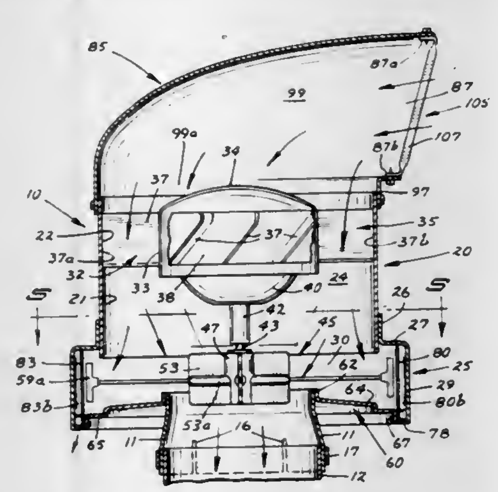

means forming a plurality of contaminant discharge passages at the periphery of said discharge chamber,
an impeller assembly disposed within said discharge chamber,
means within said housing securing said impeller assembly, and
means carried by said impeller assembly discharging contaminants from said air stream to said discharge passages.

4,373,941
CENTRIFUGE SEPARATOR
Ernest Lagelbauer, 223 W. 21st St., New York, N.Y. 10011
Filed Feb. 13, 1981, Ser. No. 234,251
Int. Cl.^{3} B01D *59/20*
U.S. Cl. 55—401 **21 Claims**

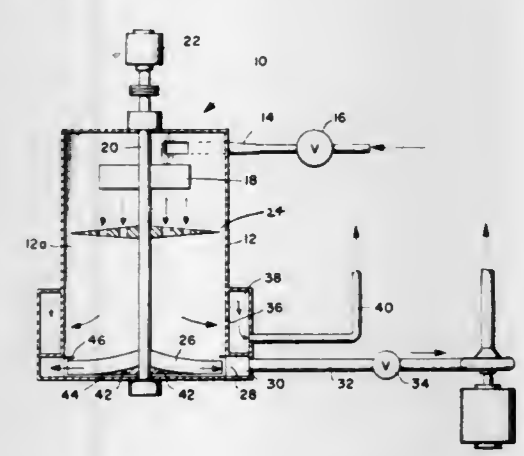

1. Apparatus for separating a specifically lighter or heavier component from a flowing medium having suspended therein components of different densities, said components including gases and/or particles, the apparatus comprising at least one stationary vessel having an apertured partition means therein forming two zones and establishing an orderly flow pattern for the flowing medium, a first upper zone forming a whirling chamber in which the flowing medium is placed into coaxial rotational flow pattern, rotational means in said first zone for establishing said rotational flow pattern, and a second zone to which the flowing medium enters through the apertures in said partition means said zone having at least two discharge means, one of said discharge means being provided for withdrawing a fluid mixture which is rich in the lighter component and the other of said discharge means being provided for withdrawing a fluid mixture which is rich in the heavier component said

partition means having a multiplicity of minute orifices for establishing an orderly flow pattern.

4,373,942
CHLOROCARBON AND HALOGEN RECOVERY FROM VENT GAS STREAM
Danny W. Wright, Hickory, Ky., assignor to Pennwalt Corporation, Philadelphia, Pa.
Filed Feb. 9, 1981, Ser. No. 232,747
Int. Cl.^{3} F25J *3/00*
U.S. Cl. 62—12 **10 Claims**

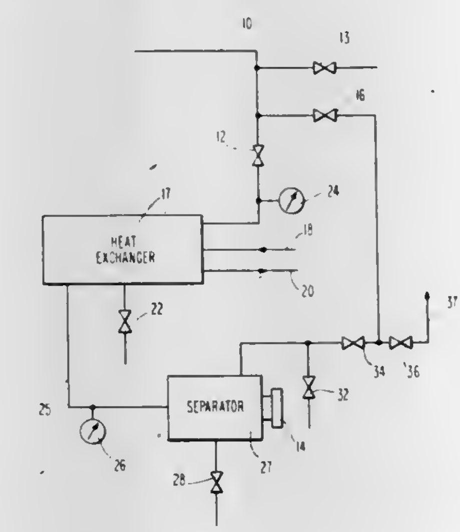

1. A method of recovering chlorocarbons from a vent gas stream containing a chlorocarbon and halogen mixture, comprising:
cooling said gas at a pressure of at least 60 psig to a temperature below the freezing point of the chlorocarbon and halogen mixture;
transferring said cooled gas to a separation chamber to coalesce said mixture; and
separating the mixture in liquid form from said gas.

4,373,943
MULTIPLE FIBER FORMING MACHINE
Alain Gouronnec, Krec'h Lia Beg Leguer, Servel, 22300 Lannion; Andre Regreny, Parc ar Croas 17, rue Albert Camus, 22700 Perros Guirec, and Michel Treheux, An Tri Breud, rue des Iles L'Ile Grande, 22560 Pleumeur-Bodou, all of France
PCT No. PCT/FR80/00046, § 371 Date Nov. 29, 1980, § 102(e) Date Nov. 19, 1980, PCT Pub. No. WO80/02139, PCT Pub. Date Oct. 16, 1980
PCT Filed Mar. 26, 1980, Ser. No. 224,527
Claims priority, application France, Mar. 23, 1979, 79 07926
Int. Cl.^{3} C03B *37/025*
U.S. Cl. 65—10.1 **6 Claims**

1. A multiple fibre forming machine permitting a simultaneous drawing of a plurality of N optical fibres and then a linear multifibre stranding, wherein it successively comprises:
(A) a first drawing assembly for a plurality of N fibres, said first assembly being constituted by:
(a) N regulatable preform supports associated with controlled speed lowering means;
(b) an assembly of N high temperature drawing enclosures, each receiving a preform and supplying a fibre;
(c) a system for the simultaneous coating of N fibres constituted by N opening spinnerets or extrusion dyes supplied by a coating product and traversed by the fibres;
(d) a plurality of N pulling capstans, each receiving a fibre and being controlled in rotation by an appropriate means; and
(e) a system for measuring the diameter of the fibres controlling the fibre formation speed of said first assembly; and
(B) a second linear multifibre stranding assembly constituted by:
(f) a cable support supply system incorporating recesses for receiving at least one fibre;
(g) means for positioning the N fibres from the first drawing assembly in the recesses of the support;

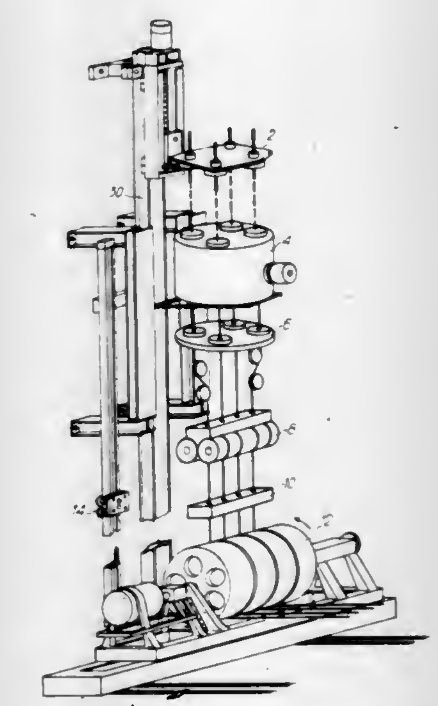

(h) a system for coating the support with its fibres, said system supplying the cable; and
(i) a cable reception drum.

4,373,944
REMOVAL OF GLASS PARTICLES FROM GLASS ARTICLES
Frederick J. Glick, Williamstown, and Richard N. Pedersen, Vineland, both of N.J., assignors to Owens-Illinois, Inc., Toledo, Ohio
Filed Aug. 10, 1981, Ser. No. 291,601
Int. Cl.^{3} C03C *19/00*
U.S. Cl. 65—23 **9 Claims**

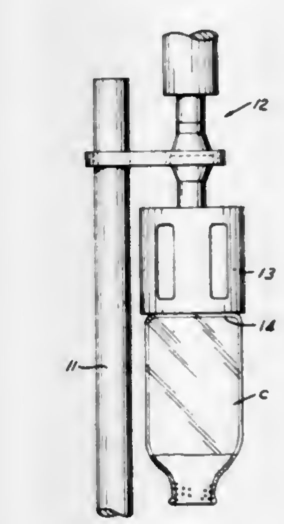

1. In a method of making hollow glass articles wherein the articles are subjected to an operation such that glass particles are deposited on the interior of the glass article, the improvement comprising the steps of removing such particles by directly contacting the glass article with a sonic resonator and subjecting the article to sonic vibrations having a frequency of about 0.5 to 90 kHz to remove the particles.

4,373,945

HERBICIDAL AGENTS BASED ON ACETANILIDES

Karl Eicken, Wachenheim, and Bruno Wuerzer, Limburgerhof, both of Fed. Rep. of Germany, assignors to BASF Aktiengesellschaft, Fed. Rep. of Germany

Division of Ser. No. 56,146, Jul. 9, 1979, Pat. No. 4,277,278. This application Nov. 24, 1980, Ser. No. 209,961

Claims priority, application Fed. Rep. of Germany, Jul. 21, 1978, 2832046

Int. Cl.[3] **A01N** *43/26*

U.S. Cl. 71—92 **2 Claims**

1. A herbicidal agent comprising a mixture of 2-chloro-2',6'-dimethyl-N-(3,5-dimethylpyrazol-1-yl-methyl)-acetanilide as compound I and 2-chloro-2',6'-diethyl-N-(methoxymethyl)-acetanilide as compound II, and wherein the weight ratio of I to II is from 1:0.5 to 1:20.

4,373,946

PROCESS OF HEAT-TREATING PELLETS

Alois Kilian, Frankfurt am Main, Fed. Rep. of Germany, assignor to Dravo Corporation, Pittsburgh, Pa.

Filed Dec. 8, 1980, Ser. No. 214,525

Claims priority, application Fed. Rep. of Germany, Dec. 8, 1979, 2949418

Int. Cl.[3] **C22B** *1/20*

U.S. Cl. 75—5 **9 Claims**

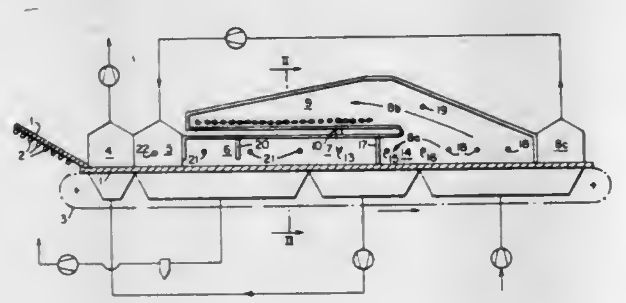

1. In a process for heat-treating pellets on a grate in a pellet firing machine having a heat-treating zone and a cooling zone wherein hot and cool gases respectively are passed through a pellet bed in each zone, hot gases being generated both by combusting fuel including outside fuel added after all of the pellets enter the heat treating zone and by conducting to the heat treating zone cooling gases which are heated as they are passed through said pellet bed in said cooling zone, the improvement comprising the steps of: charging solid carbonaceous fuel comprising at least part of the outside fuel onto the upper surface of the pellet bed, and burning said carbonaceous fuel to generate at least a portion of said hot gases in said heat-treating zone, with said hot gases flowing downwardly through the pellet bed in at least a portion of the heat treating zone and said cooling gases flowing upwardly through the pellet bed in at least a portion of the cooling zone, said cooling gases being heated for transfer into said heat treating zone, and with the particle size distribution and charging location of said solid carbonaceous fuel on the upper surface of said pellet bed being selected such that at least some of the fuel particles are lifted from the surface of the bed in the cooling zone by the upwardly flowing cooling gases with the smaller particles being consumed while the gases flow toward the pellet bed in the heat-treating zone and with the larger particles falling onto the upper surface of the bed in the heat-treating zone where they continue to burn.

4,373,947

PROCESS FOR THE PREPARATION OF ALLOY POWDERS WHICH CAN BE SINTERED AND WHICH ARE BASED ON TITANIUM

Günter Büttner; Hans-Günter Domazer, and Horst Eggert, all of Essen, Fed. Rep. of Germany, assignors to Th. Goldschmidt AG, Essen, Fed. Rep. of Germany

Filed May 4, 1981, Ser. No. 260,178

Claims priority, application Fed. Rep. of Germany, May 9, 1980, 3017782

Int. Cl.[3] **C22B** *5/04, 34/12;* **C22C** *1/04*

U.S. Cl. 75—0.5 BB **12 Claims**

1. In a process for the preparation of an alloy powder which can be sintered and is based on titanium by the calciothermal reduction of oxides of the metals forming the alloys in the presence of inert additives, the improvement which comprises:

(a) mixing titanium oxide with the oxides of the other components of the alloy in amounts, based on the metals, corresponding to the desired composition of the alloy, adding an alkaline earth oxide or alkaline earth carbonate in a molar ratio of metal oxides to be reduced to alkaline earth oxide or alkaline earth carbonate of 1:1 to 6:1, homogenizing the mixture, calcining the homogenized mixture at temperatures of 1000° C. to 1300° C. for 6 to 18 hours, and cooling and crushing and milling the calcined mixture to a particle size of $\leqq 1$ mm;

(b) adding calcium in small pieces to the particles in an amount equivalent to 1.2 to 2.0 times the oxygen content of the oxides to be reduced, adding a booster in a molar ratio of oxide to be reduced to booster of 1:0.01 to 1:0.2, mixing the thus formed reaction batch, molding the mixture into green compacts and

(c) heating the green compacts in a closed off reaction crucible which was evacuated to an initial pressure of 1×10^{-4} to 1×10^{-6} bar, at a temperature of 1000° C. to 1300° C. for a period of 2 to 8 hours, and

(d) cooling the reaction product and crushing and milling it to a particle size of $\leqq 2$ mm, leaching out the calcium oxide with a suitable dissolving agent which does not dissolve the alloy powder, and washing and drying the alloy powder obtained.

4,373,948

ADDITION AGENTS FOR IRON-BASE ALLOYS

Gloria M. Faulring, Niagara Falls; Alan Fitzgibbon, Lewiston, and Frank Slish, Grand Island, all of N.Y., assignors to Union Carbide Corporation, Danbury, Conn.

Filed Mar. 31, 1981, Ser. No. 249,510

Int. Cl.[3] **C21C** *7/00*

U.S. Cl. 75—57 **12 Claims**

1. An addition agent for adding to molten iron-base alloys a metal selected from the group consisting of Nb, Mo, Cr and W, said addition agent consisting essentially of an agglomerated blended mixture of 20 to 80% by weight of about a finely divided oxide of one of said metals with about 20 to 80% by weight of a finely divided calcium bearing material selected from the group consisting of calcium-silicon alloy, calcium carbide and calcium cyanamide.

4,373,949

METHOD FOR INCREASING VESSEL LINING LIFE FOR BASIC OXYGEN FURNACES

Jerry V. Spruell, Grosse Ile, Mich., and Jennings B. Lewis, III, Putnam Valley, N.Y., assignors to Union Carbide Corporation, Danbury, Conn.

Continuation of Ser. No. 10,315, Feb. 7, 1979, abandoned. This application Aug. 21, 1981, Ser. No. 295,122

Int. Cl.[3] **C21C** *5/34*

U.S. Cl. 75—60 **10 Claims**

1. A method for increasing the life of the refractory lining of a basic refractory-lined vessel for the production of steel comprising: blowing oxygen into a ferrous melt through an oxygen

lance from above the surface of the melt, introducing slag forming ingredients into said vessel, including amounts of dolomitic lime that do not substantially interfere with the ability of the slag to remove sulfur from said melt, said amounts of dolomitic lime constituting from 0 to 40 weight percent of the total slag forming ingredients, characterized by:

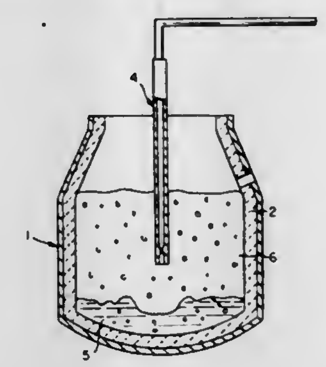

(a) introducing additional dolomitic lime into the vessel which would under conventional practice impair the sulfur removing ability of the slag by increasing slag viscosity, and

(b) introducing sufficient inert gas into the melt to counteract the increased slag viscosity by causing adequate mixing and agitation between the slag and the melt to remove the sulfur from the melt.

4,373,950

PROCESS OF PREPARING ALUMINUM OF HIGH PURITY

Hideo Shingu, Kyoto; Kozo Arai, and Ryotatsu Ootsuka, both of Osaka, all of Japan, assignors to Showa Aluminium Kabushiki Kaisha, Osaka, Japan

Filed Oct. 8, 1980, Ser. No. 195,125

Claims priority, application Japan, Oct. 9, 1979, 54-130505; Apr. 11, 1980, 55-48259

Int. Cl.[3] **C22B** *21/06*

U.S. Cl. 75—68 R **5 Claims**

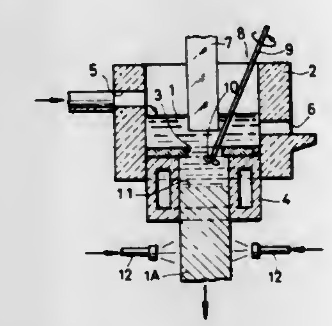

1. In melting aluminum containing impurities and solidifying the molten aluminum with the result of impurities being released in combination therewith a process for purifying aluminum comprising the steps of breaking down dendrites extending from the interface between the liquid phase and the solid phase of aluminum into the liquid phase by ultrasonic vibration to release impurities from between the dendrites or between the branches of the dendrites in the liquid phase, dispersing the released impurities in the entire body of the liquid phase by mechanically stirring the liquid phase to keep the interface smooth, and extracting only the highly purified aluminum.

4,373,951

NONMAGNETIC STEELS HAVING LOW THERMAL EXPANSION COEFFICIENTS AND HIGH YIELD POINTS

Chiaki Ouchi, and Yohji Kohsaka, both of Yokohama, Japan, assignors to Nippon Kokan Kabushiki Kaisha, Tokyo, Japan

Division of Ser. No. 104,754, Dec. 18, 1979, Pat. No. 4,256,516. This application Oct. 15, 1980, Ser. No. 197,138

Claims priority, application Japan, Dec. 26, 1978, 53-159206; Jan. 30, 1979, 54-8770

Int. Cl.[3] **C22C** *38/02, 38/04, 38/34, 38/38*

U.S. Cl. 75—123 N **4 Claims**

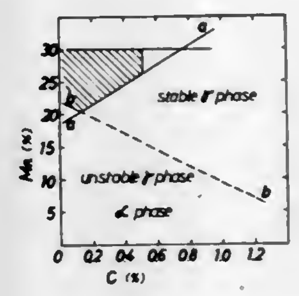

1. Nonmagnetic steel having a low thermal expansion coefficient consisting of less than 0.5% by weight of C, less than 2% by weight of Si, 20 to 30% by weight of Mn, and 0.005 to 0.04% by weight of N and the balance iron and impurities, wherein the following relationships between the amounts of C and Mn are simultaneously satisfied

$$Mn(\%) > 16\times C(\%) + 18$$

$$Mn(\%) > -12\times C(\%) + 21.5.$$

4,373,952

INTERMETALLIC COMPOSITE

Edward D. Parent, Hamilton, Mass., assignor to GTE Products Corporation, Stamford, Conn.

Filed Oct. 19, 1981, Ser. No. 313,002

Int. Cl.[3] **B22F** *3/14;* **C22C** *1/05*

U.S. Cl. 75—244 **6 Claims**

1. A hot pressed intermetallic composite comprised of titanium diboride and boron nitride and including tungsten in an amount of from about 0.1% to 20% by weight and having a density of at least 85% of theoretical.

4,373,953

SURFACE-COATING COMPOSITIONS CONTAINING POLYVALENT METAL SALTS OF HYDROXYBENZOIC ACID ESTERS

Adolph J. Deinet, East Brunswick, and William B. Woods, Lebanon, both of N.J., assignors to Tenneco Chemicals, Inc., Piscataway, N.J.

Filed Apr. 6, 1981, Ser. No. 251,678

Int. Cl.[3] **C09D** *5/14*

U.S. Cl. 106—16 **12 Claims**

1. A surface-coating composition having improved resistance to attack by fungi and other microorganisms that comprises

(a) a water-insoluble resinous binder selected from the group consisting of synthetic linear addition polymers prepared by the emulsion polymerization of ethylenically-unsaturated monomers, oleoresinous binders, and mixtures thereof and

(b) 0.1% to 3%, based on the weight of the composition, of a biocidal compound having the structural formula

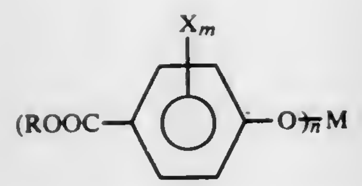

wherein the R's may be the same or different and each R represents an alkyl, aryl, aralkyl, alkaryl, or alicyclic group having 1 to 10 carbon atoms; X represents hydrogen, chlorine, bromine, nitro, an alkyl group having 1 to 4 carbon atoms, or an alkoxy group having 1 to 4 carbon atoms, M represents an environmentally-acceptable metal having a valence of 2, 3, or 4; m is 1 or 2; and n is the valence of the metal M.

4,373,954
RECORDING LIQUID AND METHOD FOR PRODUCING THE SAME
Tsuyoshi Eida, Chiba; Yasuhiro Yano, Naka; Yohji Matsufuji, Tokyo; Masahiro Haruta, Funabashi, and Tokuya Ohta, Yokohama, all of Japan, assignors to Canon Kabushiki Kaisha, Tokyo, Japan
Filed Apr. 22, 1981, Ser. No. 256,306
Int. Cl.³ C09D *11/02*
U.S. Cl. 106—20 **16 Claims**

1. A recording liquid comprising an aqueous composition of a water-soluble dye as the recording agent, wherein said liquid has a total concentration of halogen ions and acid radicals within the range from 0.00001 to 0.5% by weight.

4,373,955
LIGHTWEIGHT INSULATING CONCRETE
James P. Bouchard, Hinsdale, and John D. Farrell, Plainfield, both of Ill., assignors to Chicago Bridge & Iron Company, Oak Brook, Ill.
Filed Nov. 4, 1981, Ser. No. 317,988
Int. Cl.³ C04B *1/00, 7/02*
U.S. Cl. 106—88 **14 Claims**

1. A method of producing a foamed insulating concrete consisting essentially of incorporating a hydrolyzed protein based aqueous foam in a slurry of portland cement, pumice, silica, pulping waste liquor and water to form a foamed concrete slurry of the following amounts of ingredients:
Portland cement—80 to 95 parts by weight,
Pumice—1 to 15 parts by weight,
Silica—0.5 to 5 parts by weight,
Pulping sulfite waste liquor—0.2 to 2 parts by weight,
Hydrolyzed protein based aqueous solution—2 to 4 parts by weight,
Water—45 to 60 parts by weight,
and then curing the concrete slurry to a solid rigid concrete.

4,373,956
ADDITIVE FOR HYDRAULIC CEMENT MIXES
Philip A. Rosskopf, South Euclid, Ohio, assignor to Martin Marietta Corporation, Bethesda, Md.
Filed Sep. 14, 1981, Ser. No. 301,904
Int. Cl.³ C04B *7/35*
U.S. Cl. 106—90 **18 Claims**

1. A hydraulic cement mix comprising a hydraulic cement, aggregate in an amount of up to 80% by weight based upon the total weight of said cement mix, sufficient water to effect hydraulic setting of the cement, and an additive comprising a mixture of an alkali and/or alkaline earth or ammonium salt of thiocyanic acid in an amount of between 0.05% and 2.5% by weight based upon the weight of the cement and an alkanolamine in an amount of between 0.001% and 0.05% by weight based upon the weight of the cement, whereby the rate of hardening of said cement mix is accelerated and the early compressive strength of the hardened mix is increased.

4,373,957
FIBRE-REINFORCED CEMENTITIOUS PRODUCT
Peder Pedersen, Hedehusene, Denmark, assignor to Rockwool International A/S, Hedehusene, Denmark
Continuation of Ser. No. 121,154, Feb. 13, 1980, abandoned. This application Jul. 29, 1981, Ser. No. 288,120
Claims priority, application Denmark, Feb. 14, 1979, 631/79
Int. Cl.³ C04B *7/353*
U.S. Cl. 106—93 **7 Claims**

1. A fibre-reinforced cementitious product, comprising a matrix of cementitious material and 3 to 13% by weight, based on the total weight of the cementitious product, of a fibrous material comprising a mixture of rock wool fibers and a sufficient amount of hemp fibers to provide a final product having an average minimum bending strength of 176±17 kg/cm² at 1.7 g/cm³.

4,373,958
ROAD BASE STABILIZATION USING LIME KILN DUST
Dennis A. Jones, Marietta, and Bruce E. Boggs, Roswell, both of Ga., assignors to JTM Industries, Inc., Marietta, Ga.
Filed Jan. 6, 1982, Ser. No. 337,221
Int. Cl.³ C04B *1/00*
U.S. Cl. 106—118 **6 Claims**

1. An essentially two-part road base stabilization mix comprising lime kiln dust as a by-product of manufacturing pebble lime from relatively high purity limestone having, in the lime kiln dust, no more than 10% magnesium oxide and having in excess of 30% calcium oxide, and an aggregate, in which the lime kiln dust comprises about 3% to about 30% by weight of the total mix.

4,373,959
READILY DISSOLVABLE POLYSACCHARIDE COMPOSITIONS
Gregory E. Socha, Midland, Mich., assignor to The Dow Chemical Company, Midland, Mich.
Filed Jun. 22, 1981, Ser. No. 276,437
Int. Cl.³ C08L *1/08*
U.S. Cl. 106—194 **13 Claims**

1. A polysaccharide composition comprising a dry blend of (a) a particulate aqueous liquid soluble, polysaccharide or polysaccharide derivative having essentially no cross-linkages which forms substantial amounts of soft lumps, nodules or other agglomerations upon addition to water at ambient conditions and (b) a particulate polysaccharide or polysaccharide derivative being sufficiently cross-linked such that the cross-linked polysaccharide or polysaccharide derivative does not form soft lumps, nodules or other agglomerations upon its addition to water; said uncross-linked polysaccharide or derivative and cross-linked polysaccharide or derivative being employed in amounts such that upon the composition's dispersion and subsequent dissolution in an aqueous solution at ambient temperature, the uncross-linked polysaccharide or derivative thereof does not form substantial amounts of soft lumps, nodulus or other agglomerations and the viscosity of the aqueous liquid is increased at a sufficient rate that the cross-linked polysaccharide is maintained in dispersion without significant amounts thereof settling prior to dissolution.

4,373,960
ASPHALT COMPOSITIONS AND METHOD FOR PAVING
Arthur T. Ward, Jr., 4 Blythewood Rd., Baltimore, Md. 21210
Filed Nov. 10, 1980, Ser. No. 205,151
Int. Cl.³ C08L *95/00*
U.S. Cl. 106—281 R **28 Claims**

1. A non-emulsified asphalt binder composition comprising:

(1) a medium curing liquid asphalt; (2) from about 0.1 to 13.5% tall oil based on the weight of medium curing asphalt and (3) 0.0001 to 0.05% by volume of an organopolysiloxane fluid, based on the volume of medium curing liquid asphalt plus tall oil.

19. A non-emulsified sealing composition comprising a rapid curing liquid asphalt and from about 0.1 to 13.5% tall oil, based on the weight of the rapid curing liquid asphalt.

4,373,961
PROCESS AND COMPOSITION FOR USE IN RECYCLING OF OLD ASPHALT PAVEMENTS
Eugene M. Stone, Denver, Colo., assignor to Penelizer Corporation, Commerce City, Colo.
Filed Oct. 13, 1981, Ser. No. 310,837
The portion of the term of this patent subsequent to May 19, 1998, has been disclaimed.
Int. Cl.³ C08L *95/00*
U.S. Cl. 106—281 R **24 Claims**

1. An asphalt base stock for use in recycling old asphalt pavements into new pavements, said asphalt base stock having the following physical properties.
(1) a penetration in the range of from about 10 to about 50 measured at 77° F.,
(2) a softening point below about 160° F.,
(3) a ductility in excess of three times the penetration, in centimeters at 77° F. when pulled at the rate of 5 centimeter per minute, wherein said asphalt base stock comprises, (1) an asphalt pitch having a penetration of less than about 25 and a softening point in the approximate range of 185° F. minus three times the penetration and (2) an asphalt cement having a penetration between about 60 and about 300.

4,373,962
SURFACE TREATED ALKALI BLUE PIGMENT
Doreswamy R. Iyengar, Holland, Mich., assignor to BASF Wyandotte Corporation, Wyandotte, Mich.
Filed Jun. 8, 1981, Ser. No. 271,438
Int. Cl.³ C09B *48/00;* **C09C** *3/68*
U.S. Cl. 106—288 Q **12 Claims**

1. A process for preparing a soft textured high strength Alkali Blue pigment composition consisting of tertiary amines and untreated Alkali Blue wherein the Alkali Blue pigment in the form of a regular, untreated presscake, produced by phenylation with aniline of parafuchsin, sulfonation, primarily mono, with sulfuric acid and subsequent precipitation of the caustic solution in mineral acid to obtain pigmentary properties followed by filtration and washing, is dispersed in water which comprises mixing said dispersion with (a) an aqueous solution of a tertiary amine acetate and (b) sufficient ammonium hydroxide to precipitate said amine onto the pigment, and recovering said pigment composition.

7. A process for preparing a soft textured high strength Alkali Blue pigment composition consisting of insoluble tertiary amines and Alkali Blue pigment wherein the Alkali Blue pigment in the form of a regular, untreated presscake, produced by phenylation with aniline of parafuchsin, sulfonation, primarily mono, with sulfuric acid and subsequent precipitation of the caustic solution in mineral acid to obtain pigmentary properties followed by filtration and washing, is dispersed in water which comprises mixing said dispersion with (a) an aqueous emulsion/dispersion of tertiary amine and (b) recovering said pigment composition.

4,373,963
LUSTROUS PIGMENT AND PROCESS FOR PRODUCING SAME
Toshiaki Uenishi; Hidefumi Harada; Katumasa Sasaki; Akio Akagi, and Takanori Yamasaki, all of Ube, Japan, assignors to Titan Kogyo K.K., Japan
Filed Sep. 3, 1981, Ser. No. 299,244
Int. Cl.³ C09C *1/24;* **C08K** *7/00;* **C01F** *7/02*
U.S. Cl. 106—304 **12 Claims**

1. A lustrous flake pigment having a grain structure of red iron oxide containing aluminum oxide in solid solution.

4,373,964
ASSISTANTS FOR THE PREPARATION OF PIGMENT PASTES AND HIGH-CONCENTRATION, LOW VISCOSITY PIGMENT PASTES
Heinrich Linden; Hans Bornmann, both of Düsseldorf-Holthausen; Wolfgang Gress, Wuppertal-Elberfeld, and Bernd Wegemund, Haan, all of Fed. Rep. of Germany, assignors to Henkel Kommanditgesellschaft auf Aktien, Dusseldorf-Holthausen, Fed. Rep. of Germany
Continuation of Ser. No. 180,816, Aug. 25, 1980, abandoned. This application Aug. 7, 1981, Ser. No. 290,826
Claims priority, application Fed. Rep. of Germany, Aug. 27, 1979, 2934528
Int. Cl.³ C09D *3/64*
U.S. Cl. 106—308 Q **7 Claims**

1. The process for the preparation of high concentration, low viscosity liquid pigments pastes consisting essentially of mixing inorganic pigments, a substantially, non-volatile liquid organic media, a suspension assistant, and, optionally, inorganic fillers, wherein said liquid pigment pastes have a concentration of inorganic pigment of at least 50% and said suspension assistant is present in an amount of from 0.5% to 20% by weight, based on the weight of said inorganic pigment and is a reaction product of the reaction of:
(A) unsaturated acidic compounds selected from the group consisting of itaconic acid, an ethene dicarboxylic acid having the formula:

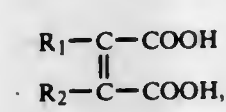

and an ethene dicarboxylic acid anhydride having the formula:

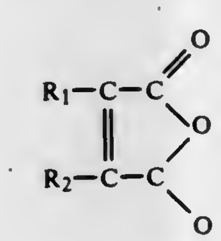

wherein R_1 and R_2 are members selected from the group consisting of hydrogen and methyl, and
(B) an unsaturated ester having the formula:

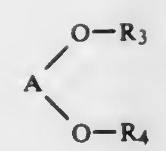

wherein R_3 and R_4 are members having 14 to 20 carbon atoms selected from the group consisting of alkenyl, alkadienyl, alkatrienyl and mixtures thereof, and A represents the acyl of an acid selected from the group consisting of itaconic acid, said ethene dicarboxylic acid, and an alkanedioic acid having the formula:

$HOOC—(CH_2)_n—COOH$

wherein n is an integer from 1 to 10, which reaction product is produced by heating said component A and said component B in a weight ratio of 1:7 to 1:35 for from 1 to 25 hours at a temperature in the range of 200° C. to 250° C.

4,373,965
SUPPRESSION OF PARASITIC SIDEWALL TRANSISTORS IN LOCOS STRUCTURES
Thomas S. Smigelski, Chicago, Ill., assignor to NCR Corporation, Dayton, Ohio
Filed Dec. 22, 1980, Ser. No. 219,015
Int. Cl.^{3} H01L *21/302, 21/26*
U.S. Cl. 148—1.5 **5 Claims**

1. An improved process for forming, in a substrate, a recessed isolation oxide layer and a buried impurity layer beneath the oxide layer, comprising:
forming a mask structure having a first, oxidation window and a second, implant window overlying the first window, the second window being wider than the first window for controlling the formation of the impurity layer such that the impurity layer spans the underside of the edge of the isolation oxide layer;
forming the impurity layer by implanting the substrate via the second window; and
forming the isolation oxide layer by oxidizing the substrate via the first window.

4,373,966
FORMING SCHOTTKY BARRIER DIODES BY DEPOSITING ALUMINUM SILICON AND COPPER OR BINARY ALLOYS THEREOF AND ALLOY-SINTERING
Sang U. Kim, Essex Junction, Vt., assignor to International Business Machines Corporation, Armonk, N.Y.
Filed Apr. 30, 1981, Ser. No. 259,311
Int. Cl.^{3} H01L *7/00*
U.S. Cl. 148—1.5 **7 Claims**

1. A method of forming a Schottky diode comprising the steps of
depositing a layer of copper doped silicon on a silicon body
depositing a layer of aluminum on said copper doped silicon layer, and
sintering the entire unit.

4,373,967
PROCESS FOR MAKING RESULFURIZED MACHINABLE STEEL
Charles R. Roper, Jr., Coatesville; John K. Strattan, Dowingtown; Roy Hetherington, Jr., West Chester, and Austin J. Hiller, Coatesville, all of Pa., assignors to Lukens, Inc., Coatesville, Pa.
Division of Ser. No. 28,435, Apr. 9, 1979, abandoned. This application Aug. 5, 1980, Ser. No. 174,760
Int. Cl.^{3} C21D *7/00*
U.S. Cl. 148—2 **3 Claims**

1. In a process for making a resulfurized free-cutting carbon steel plate which is free of lead and other toxic elements such as selenium and tellurium and is substantially free of oxide inclusions of alumina and silicates, the process including the steps of producing a melt which is free of lead and other toxic elements and is composed of iron, manganese and carbon in ratios for free-cutting carbon steel, with sulfur being included at about 0.15 percent, adding silicon and aluminum as necessary to fully deoxidize the molten metal, adding silica and alumina as slag conditioners in the ladle as sufficient to produce a low ladle slag V-ratio (CaO to SiO_2) of approximately two to one, tapping the molten metal into the ladle, treating the molten metal in the ladle by a calcium-argon-blowing process wherein calcium carbide and calcium-silicon are injected into the molten metal in an argon stream at a rate of about two pounds of contained calcium per ton of molten metal over a period of five to ten minutes as sufficient to reduce the sulfur content to 0.07 to 0.15%, substantially removing silicate and alumina inclusions, thereafter casting said molten metal into an ingot or continuous cast slab.

2. A method in accordance with claim 1 wherein said ingot or slab is reduced by rolling to a plate which has a thickness not greater than twelve inches.

4,373,968
COATING COMPOSITION
Susan V. Hess, Norristown, Pa., assignor to Amchem Products, Inc., Ambler, Pa.
Filed Jun. 24, 1981, Ser. No. 276,881
Int. Cl.^{3} C23F *7/24*
U.S. Cl. 148—6.2 **23 Claims**

1. In a coating composition of the type which is effective in forming on a metallic surface a corrosion-resistant coating and which comprises an acidic aqueous coating solution containing hexavalent chromium, reduced chromium and dispersed acrylic resin solids, and of the type which, when applied to a substrate by an applicator roll, tends to deposit on the roll excessive amounts of chromium, the improvement comprising inclusion in the composition of an alkylphenoxypoly(alkyleneoxy)ether surfactant in an amount sufficient to deter said excessive chromium build-up.

4,373,969
METHOD OF REMOVING CRACKS, AND MULTIPLE-SHAPE TORCH FOR CARRYING OUT THE METHOD
Michel Donze, Essey-les-Nancy, France, assignor to Etablissements Somalor-Ferrari "Somafer", Uckange, France
PCT No. PCT/FR81/00005, § 371 Date Jul. 30, 1981, § 102(e) Date Jul. 30, 1981, PCT Pub. No. WO81/01973, PCT Pub. Date Jul. 23, 1981
PCT Filed Jan. 14, 1981, Ser. No. 287,743
Claims priority, application France, Jan. 18, 1980, 80 01555
Int. Cl.^{3} B23K *7/06*
U.S. Cl. 148—9.5 **7 Claims**

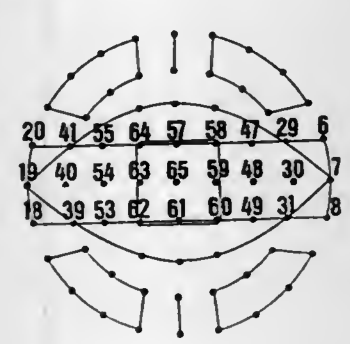

1. A method of removing cracks with an oxygen jet of adjustable strength and direction, surrounded by heating flames, the cross section of said jet being variable characterized in that during the crack removal process the shape of the cross section of the jet is varied independently of its strength to adapt to the area surface of the cracks.

4,373,970
COPPER BASE SPINODAL ALLOY STRIP AND PROCESS FOR ITS PREPARATION
Clive R. Scorey, and Roy A. Smith, both of Cheshire, Conn., assignors to Pfizer Inc., New York, N.Y.
Filed Nov. 13, 1981, Ser. No. 321,341
Int. Cl.^{3} C22F *1/08;* **B22F** *3/16*
U.S. Cl. 148—11.5 C **34 Claims**

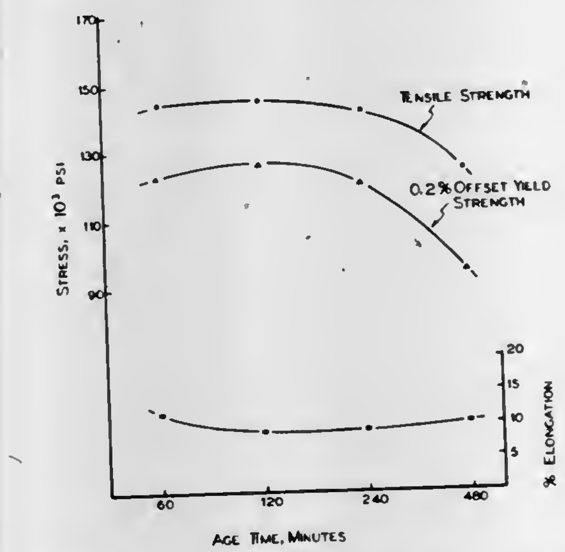

1. A process for preparing copper base spinodal alloy strip having good strength properties in combination with good ductility, which comprises:
(a) providing a copper base alloy powder containing from about 5 to 35 percent nickel, from about 7 to 13 percent tin, balance copper;
(b) compacting the alloy powder to form a green strip having structural integrity and sufficient porosity to be penetrated by a reducing atmosphere;
(c) sintering the green strip in the reducing atmosphere to form a metallurgical bond; (d) cooling the sintered strip at a rate to prevent agen hardening and embrittlement; (e) rolling the cooled sintered strip to substantially fully dense final gage; and (f) finally annealing the rolled strip and quenching it at a rate sufficient to retain substantially all alpha phase.

4,373,971
PROCESS FOR THE PRODUCTION OF FERRITIC STAINLESS STEEL SHEETS OR STRIPS AND PRODUCTS PRODUCED BY SAID PROCESS
Tadashi Sawatani; Mitsuo Ishii, both of Hikari, and Hirofumi Yoshimura, Fukuoka, all of Japan, assignors to Nippon Steel Corporation, Tokyo, Japan
Filed Jan. 6, 1981, Ser. No. 222,762
Claims priority, application Japan, Jan. 11, 1980, 55-1883
Int. Cl.^{3} C21D *8/02, 9/46*
U.S. Cl. 148—12 EA **9 Claims**

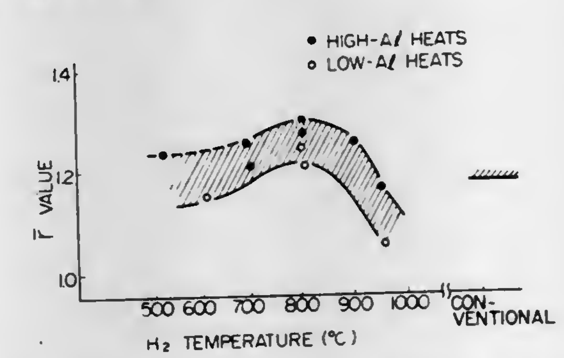

1. A process for the production of a ferritic stainless steel sheet or strip, characterized by carrying out a continuous annealing process comprising heating a hot rolled steel sheet or strip of an Al-containing ferritic stainless steel at a temperature of from 850° to 1100° C., hereinafter referred to as H_1 temperature, by continuous annealing, then precipitating aluminum nitride, in a dispersed state, by cooling the strip down to a temperature of from 700° to 900° C., hereinafter referred to as H_2 temperature, performing subsequent cooling to a level not higher than 200° C. at such a cooling rate that a chromium depletion layer, which may cause a gold dust defect, is not formed, and carrying out cold rolling and recrystallization annealing in combination until the sheet or strip thickness is reduced to desired gauge thickness.

4,373,972
PRODUCTION OF NICKEL BAR AND ROD
Sidney A. Burgin, and David J. Latham, both of Sheffield, England, assignors to British Steel Corporation, London, England
Filed Dec. 1, 1981, Ser. No. 326,402
Claims priority, application United Kingdom, Dec. 2, 1980, 8038656
Int. Cl.^{3} C21D *9/00*
U.S. Cl. 148—12 B **6 Claims**

1. A method of producing nickel steel rod or bar of a composition including at least 4% by weight nickel and less than 0.2% by weight carbon, which method comprises the step of cooling a rod or bar of such composition on leaving a rolling mill at a rate which is controlled to produce in the cooled rod or bar a micro-structure which is predominately martensitic.

4,373,973
METHOD OF MANUFACTURE OF HIGH PERFORMANCE GEARS
Raymond A. Cellitti, Hinsdale, Ill., and John A. Halgren, Hilltop Lakes, Tex., assignors to International Harvester Co., Chicago, Ill.
Filed Nov. 16, 1981, Ser. No. 321,515
Int. Cl.^{3} C21D *9/32*
U.S. Cl. 148—12.4 **7 Claims**

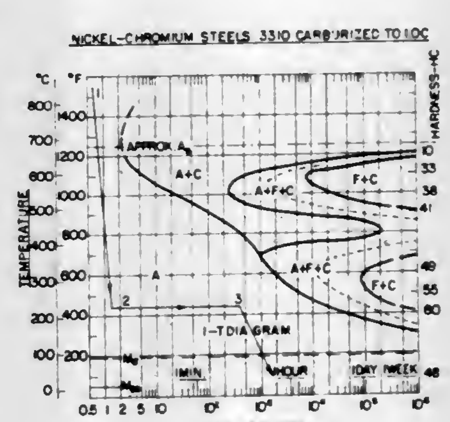

1. Method of shaping gear teeth of a high performance gear, comprising the steps of:
(a) heating a hobbed gear blank having carburized gear teeth surfaces above its critical temperature to obtain a metastable austenitic structure throughout its carburized case;
(b) isothermally quenching said gear blank at a rate greater than the critical cooling rate of its carburized case to a uniform metastable austenitic temperature just above the martensitic temperature transformation;
(c) holding the temperature of said gear blank in said uniform temperature range while rolling said gear teeth surfaces to a desired shape before martensitic transformation occurs; and
(d) cooling said gear through the martensitic range for the carburized gear surfaces to harden said gear surfaces.

4,373,974
SOLDER COMPOSITION
Felix Barajas, Huntington Beach, Calif., assignor to McDonnell Douglas Corporation, Long Beach, Calif.
Filed Apr. 2, 1981, Ser. No. 250,209
Int. Cl.³ B23K *35/34*
U.S. Cl. 148—24 **25 Claims**

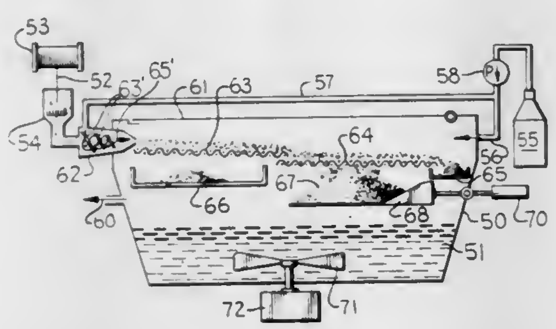

1. A solder composition especially adapted for soldering components in electronic circuitry, whereby following soldering essentially no solder balls are formed, said solder composition comprising finely divided solder metal dispersed in a liquid vehicle containing (a) a thixotropic agent, (b) an organic solvent and (c) a rosin type flux, the particle size of said metal ranging from 40 to 70 microns, said liquid vehicle being present in an amount of 13 to 14%, and said solder metal being present in an amount of 86 to 87%, by weight of said composition.

4,373,975
METHOD OF DIFFUSING AN IMPURITY
Mitsuo Nanba, Hinondemachi; Masahiko Ogirima, Tokyo; Hirotsugu Kozuka, Sekimachi, and Akira Shintani, Hachioji, all of Japan, assignors to Hitachi, Ltd., Tokyo, Japan
Filed Jan. 26, 1981, Ser. No. 228,476
Claims priority, application Japan, Jan. 30, 1980, 55-8809
Int. Cl.³ H01L *21/223*
U.S. Cl. 148—189 **25 Claims**

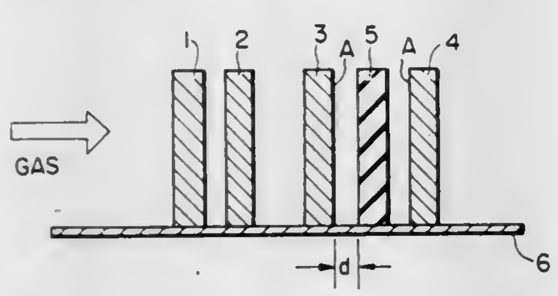

1. A method of diffusing antimony in the formation of a semiconductor device comprising the step of arranging alumina and/or aluminum in the vicinity of a wafer surface in which an antimony diffused layer is to be formed, and the step of diffusing antimony from its vapor phase, said antimony being diffused with no appreciable diffusion of aluminum.

4,373,976
GUN PROPELLANT CONTAINING NITROAMINOGUANIDINE
Joseph E. Flanagan, Woodland Hills, and Vernon E. Haury, Simi, both of Calif., assignors to Rockwell International Corporation, El Segundo, Calif.
Filed Mar. 9, 1977, Ser. No. 775,823
Int. Cl.³ C06B *25/34*
U.S. Cl. 149—92 **1 Claim**

1. A gun propellant comprising:
Nitroaminoguanidine—50-80 percent
Nitrocellulose (12.6% N)—15-40 percent
Cyclotetramethylene tetranitramine—0-30 percent
Inert Plasticizer triacetin or isodecylpelarganate—0-15 percent.

4,373,977
METHOD OF MAKING A COMPOSITE WIRE
Frederick Rothwarf, London, England, assignor to The United States of America as represented by the Secretary of the Army, Washington, D.C.
Filed Jun. 25, 1981, Ser. No. 277,365
Int. Cl.³ H01B *13/22, 7/28*
U.S. Cl. 156—51 **7 Claims**

1. Method of making a high strength, lightweight composite wire, said method including the steps of:
(A). intercalating graphite fiber manufactured in continuous fibers many kilometers in length with a solution of a material that will impart high electrical conductivities to the fiber selected from the group consisting of strong acid fluorides, metal chlorides, metal bromides, and metal fluorides,
(B) coating the intercalated fiber with titanium as a wetting agent by means of vacuum evaporation,
(C) placing the coated intercalated graphite fiber into a molten bath of a material selected from the group consisting of magnesium, copper substituted $Mg_{17}Al_{12}$alloy and zinc substituted $Mg_{17}Al_{12}$alloy, and,
(D) producing a composite wire by extrusion through a suitable die.

4,373,978
BONDING DEVICES AND METHODS FOR BONDING TAPE CLOSURES TO A CONTAINER END
Richard A. Patterson, Woodbury, Minn., assignor to Minnesota Mining and Manufacturing Company, St. Paul, Minn.
Filed May 18, 1981, Ser. No. 264,832
Int. Cl.³ B65D *17/14*
U.S. Cl. 156—69 **4 Claims**

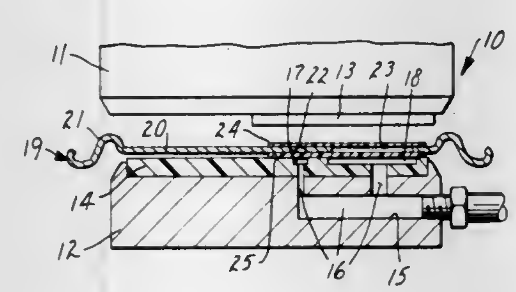

1. A device for bonding predetermined lengths of tape to a container end having a preformed opening, said device comprising:
(a) heat-activating first means for adhesively attaching a heat-activated first tape to one side of said container end circumjacent said preformed opening, said heat-activating first means comprising a heated, substantially planar bonding surface; and
(b) second means for adhesively attaching a second tape to the opposite side of said container end circumjacent said preformed opening, said second means including means for adhesively attaching said second tape to said container end and compressed air means for deforming said second tape into the cavity of said preformed opening such that said second tape contacts and is adhered to said heat-activated first tape in the region of said preformed opening, said compressed air means employing compressed air acting on said container end in a sealed area.

4,373,979
SEALED BAGS OF PLASTIC MATERIALS
Mirek Planeta, Burlington, Canada, assignor to Workman Bag Company Ltd., Montreal, Canada
Filed Sep. 26, 1980, Ser. No. 191,119
Int. Cl.³ B29D *23/10;* **B32B** *31/20*
U.S. Cl. 156—73.1 **4 Claims**

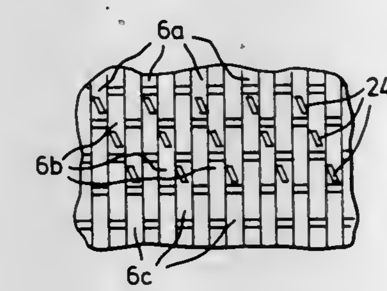

1. A method of sealing together a first member and a second member of plastics material, at least one of which members is a fabric comprising a first plurality of parallel strips interwoven with a second plurality of parallel strips at right angles to the said first plurality, the strips of each plurality being of the same width and being of oriented plastics material whose orientation and strength are adversely affected by heat, said method comprising the steps of:
overlapping respective portions of said first member and said second member at the location of the joint to be formed between them,
applying to said overlapping portions at least two parallel rows of ultrasonic spot welds in a specific pattern wherein the rows of spot welds are parallel to the first plurality of parallel strips, the rows are spaced apart from one another a distance corresponding to the width of the strips of the first plurality, or a multiple thereof, the spot welds of each row are spaced apart a distance corresponding to the width of the strips of the second plurality times the number of rows, or a multiple thereof, and the immediately adjacent spot welds of the two rows are staggered relative to one another along the length of the respective rows whereby the said immediately adjacent spot welds are on different strips of the second plurality.

4,373,980
METHOD OF MANUFACTURE OF SOUND BOX OF STRINGED INSTRUMENTS, PARTICULARLY VIOLINS
Bogdan Skalmierski, Gliwice, and Krzysztof Mroz, Radkow, both of Poland, assignors to Politechnika Slaska im. Wincentego Pstrowskiego, Gliwice, Poland
Filed Jan. 30, 1981, Ser. No. 230,271
Claims priority, application Poland, Feb. 8, 1980, 221943; May 16, 1980, 224327
Int. Cl.³ G10D *1/02;* **B32B** *31/00*
U.S. Cl. 156—160 **1 Claim**

1. A method of manufacturing a sound box of a stringed musical instrument, particularly a violin, comprising subjecting the top and bottom plates of the sound box to stress causing an arc-shaped configuration having a curvature opposite to the curvature normally produced by the stretched strings of the finished instrument, preliminarily bending side members to form a side rim and cementing battens thereto, elastically bending said side rim to the desired final configuration, bonding said top and bottom plates to said side rim, and releasing

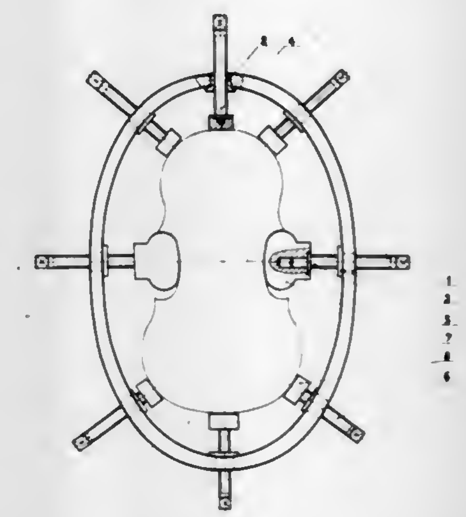

said stress, whereby said top plate is tensioned to produce improved acoustical properties in the sound box.

4,373,981
PROCESS FOR THE MANUFACTURE OF OBJECTS FROM WATER-HARDENED MATERIAL
Joseph J. P. Bömers, Weert, Netherlands; David G. Ellis, Leeds, England; Johann J. Jansen, Nieuwstadt, and Jan M. J. M. Bijen, Munstergeleen, both of Netherlands, assignors to Plasticisers, Ltd., Drighlington, England
Filed Dec. 18, 1980, Ser. No. 217,681
Claims priority, application Netherlands, Dec. 22, 1979, 7909298
Int. Cl.³ B32B *31/00*
U.S. Cl. 156—164 **12 Claims**

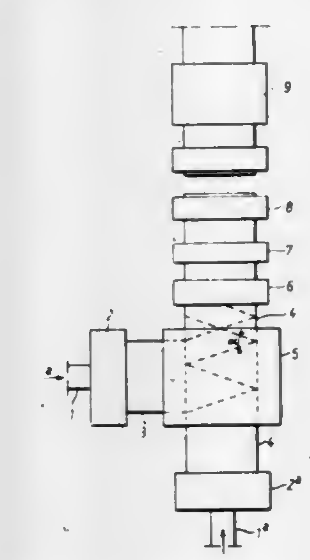

1. In a process for the manufacture of objects from water-hardened materials, reinforced with at least one reticulate web which has been formed by stretching, fibrillating, and spreading an organic polymeric material, said process including the steps of continuously supplying said at least one reticulate web into contact with a water-hardenable material and water, and shaping and hardening the resulting composite material to form said object, the improvement comprising:
continuously supplying said at least one reticulate web to a moving carrier from a direction virtually normal to the direction of travel of said carrier;
folding said at least one reticulate web in a zig-zag manner to form a folded network on said carrier;
adjusting the rate of supply of said at least one reticulate web to be folded and the rate of travel of said carrier such that the angle between two successive folded sides of said at least one reticulate web so folded is between ½° and 120°; and

subsequently contacting said folded network with a water-hardening material and water.

4,373,982
ULTRASONIC SEALING APPARATUS
William D. Kreager, Dallas, Tex., and Stanley I. Mason, Jr., Weston, Conn., assignors to Frito-Lay, Inc., Dallas, Tex.
Filed Nov. 24, 1980, Ser. No. 209,979
Int. Cl.³ B29C *27/08;* **B29D** *23/10*
U.S. Cl. 156—359 **10 Claims**

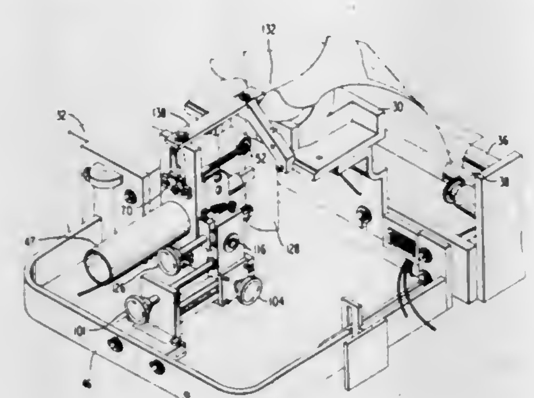

6. In an apparatus for forming, sealing and filling bags made of sealable sheet material,
(a) a bag-forming unit;
(b) means for supplying sheet material to said forming unit;
(c) said forming unit being suitable for shaping said sheet material into tubular form with contiguous edges;
(d) an anvil over which said edges can be moved;
(e) an ultrasonic unit including a horn positioned in closely spaced relationship to said anvil;
(f) means for moving said sheet material with the edges thereof disposed between said anvil and said horn;
(g) means responsive to movement of said sheet material for controlling the energization of said ultrasonic unit;
(h) said means for supplying sheet material including a roller over which said sheet material can be passed;
(i) said responsive means including a tachometer having a wheel engaging said roller; and
(j) said tachometer being suitable for developing a signal to control energization of said ultrasonic unit.

8. In an apparatus for forming, sealing and filling bags made of sealable sheet material,
(a) a bag-forming unit;
(b) means for supplying sheet material to said forming unit;
(c) said forming unit being suitable for shaping said sheet material into tubular form with contiguous edges;
(d) an anvil over which said edges can be moved;
(e) an ultrasonic unit including a horn positioned in closely spaced relationship to said anvil;
(f) means for moving said sheet material with the edges thereof disposed between said anvil and said horn;
(g) means responsive to movement of said sheet material for controlling the energization of said ultrasonic unit;
(h) adjustable means engaging said forming unit and engaging supporting structure for said ultrasonic unit to position said ultrasonic unit relative to said forming unit in rigid relationship;
(i) said adjustable means including a rigid bar member connected to said forming unit at one end and to said ultrasonic unit supporting structure at the other end;
(j) said ultrasonic unit supporting structure including a bracket member;
(k) at least one of said members including an elongated slot; and
(l) a bolt received in said slot for adjustably connecting said bar to said bracket.

4,373,983
MEANS FOR ASSEMBLING CONTAINER HALVES
John Walter, Evergreen Park, Ill., assignor to Continental Group, Inc., Conn.
Continuation-in-part of Ser. No. 40,354, May 18, 1979, abandoned. This application Mar. 23, 1981, Ser. No. 246,454
Int. Cl.³ B29D *3/00*
U.S. Cl. 156—423 **10 Claims**

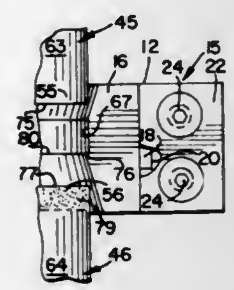

10. A system for joining two container sections of equal external diameters, wherein one section is insertable into the other and each section being made of metal such as aluminum alloy and each section having a body side wall of less than 9 mils in thickness, an end wall connected to one end of the side wall and the body having a flexible open end portion at the other end terminating in a raw edge highly susceptible to distortion and crimping,
means for applying a stabilizing flexible coating of adhesive on the open end portion of at least one of said sections,
means for axially aligning said sections with their open ends portions toward each other,
means for shaping one of said sections into a cylindrical shape at said open end portion,
means for imposing a hoop stress on the open end portion of the other section to an extent sufficient to reduce the diameter of the other section less than the internal diameter of said one section means for urging said sections towards each other and effecting insertion of said end portion of the other section into said one section end portion while thus maintaining said other section reduced in diameter,
means for releasing said shaping and hoop stress imposing means and thereby permitting said end portion of said other section to expand within said end portion of said one section,
and means for heating said adhesive to effect a bond between said portions.

4,373,984
MACHINE FOR APPLYING TRANSFER FOIL TO A SHAPED EDGE OF A SUBSTRATE
James H. Hawkins, Anderson, Calif., assignor to Voorwood Company, Anderson, Calif.
Filed Jul. 16, 1980, Ser. No. 169,375
Int. Cl.³ B32B *31/00;* **B65C** *1/00;* **B32B** *3/04*
U.S. Cl. 156—477.1 **7 Claims**

1. A machine for applying transfer foil to a shaped edge of a substrate, said machine comprising:
a. an elongated frame having opposite lateral sides and extending from a forward end to an after end;
b. transport means adjacent said frame for advancing the substrate from said forward end toward said after end with the shaped edge facing toward one of said lateral sides of said frame;
c. means on said frame for supplying transfer foil to the shaped edge in synchronism with the speed of advance of the substrate;
d. an applicator wheel rotatably mounted on said one lateral side of said frame, said wheel having a periphery of resilient material profiled to conform to the shaped edge;
e. means for radiantly heating the periphery of said wheel to a temperature sufficient to effect transfer of the foil coating to the shaped edge;
f. means for biasing said wheel against the shaped edge with sufficient force to flatten the resilient material of said wheel so that the heated material remains in heat transferring contact with the transfer foil for a dwell period substantially in excess of the substantially instantaneous contact which obtains in a line engagement;
g. means for guiding the transfer foil between the shaped edge and the adjacent periphery of said wheel at a constant attack angle on the order of five degrees or less thereby helping to preclude the formation of wrinkles and

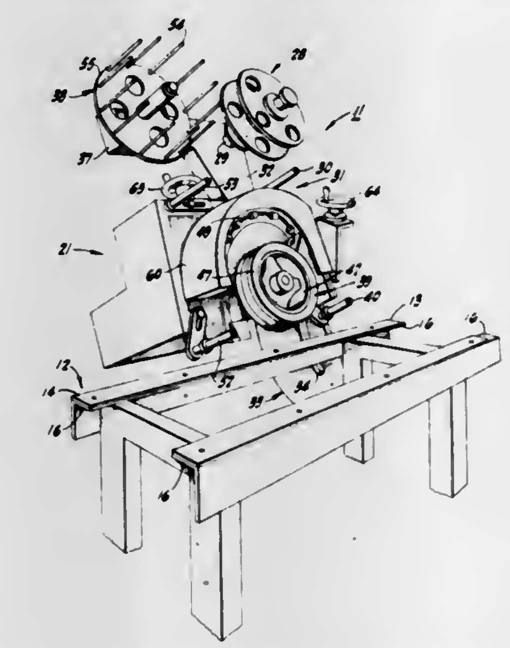

other anomalies in the foil coating transferred to the shaped edge;
h. an arcuately slotted C-shaped sector plate mounted transversely on said one lateral side of said frame, a shaft, means for positioning said shaft at predetermined angular attitudes on said sector plate, means for mounting said applicator wheel on one end of said shaft, and an electrical motor in driving engagement with the other end of said shaft; and,
i. a one-way dog clutch interposed in said shaft between said applicator wheel and said motor, said clutch being effective to drive said applicator wheel from said motor when said applicator wheel and the transfer foil are disengaged.

4,373,985
ADHESIVE BINDER
Major D. Glendening, St. Joseph, Mich., assignor to F. P. Rosback Company, St. Joseph, Mich.
Filed Apr. 1, 1981, Ser. No. 250,046
Int. Cl.³ B42C *19/00*
U.S. Cl. 118—103 **8 Claims**

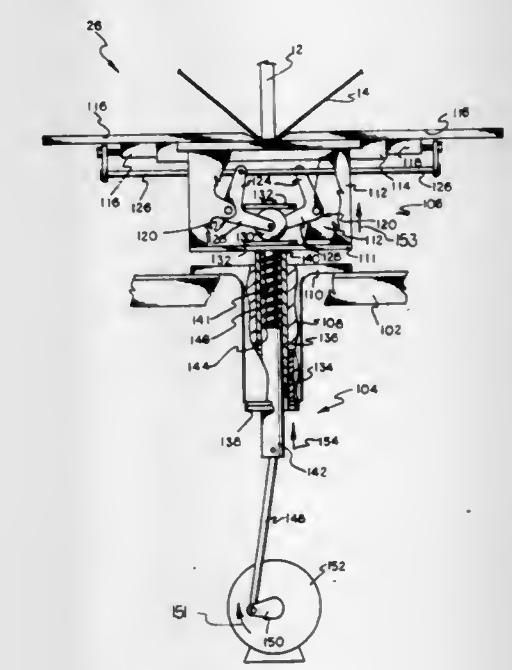

1. In an adhesive binding machine for collated paper, said machine including a glue pot having side walls and a bottom wall across which said paper traverses, roller means within said pot for applying glue from a glue supply contained in said pot to a trimmed edge of said pages, the improvement in said glue pot comprising a second roller means parallel to and rotatable in the same direction as said first mentioned roller means for applying glue from said glue supply to said trimmed paper edge, means for rotating said first mentioned and second roller means in the direction of travel of said paper across said glue pot, string means stretched across said glue pot downstream relative to the direction of travel of said paper from said second roller means for wiping excess glue from said trimmed paper edges.

8. In an adhesive binding machine for collated paper, said machine including a frame carrying a device for applying a cover sheet to said paper about one trimmed edge having glue applied thereon, said cover applicating device including nipper means having slidable opposed table portions for supporting said cover and pressing the cover about said trimmed edge, said table portions having corresponding lower and upper positions and first and second spaced positions wherein the table portions are more closely positioned to each other when in said second position, the improvement comprising actuator means including a cyclical motor means for actuating the actuator, said actuator means for shifting said table portions from said lower position into said upper position when supporting said cover to urge the cover into contact with said trimmed edge and shifting said table portions from said first position into said second position during one cycle of said motor means, said nipper means including camming means connected between said actuator means and said table portions for shifting said table portions from said first position to said second position, said camming means including a pair of bellcranks, one arm of each bellcrank connected to a table portion and the other arm of each bellcrank eccentrically connected to a roller cam wherein upper movement of the roller cam causes the connected table portion to shift into said second position, upper and lower rigidly spaced cam retainer plates, each roller cam being located between and horizontally shiftable between said retainer plates, said actuator means including a housing connected at its upper end to said machine frame and having a bore therethrough, a hollow cylindrical shaft fitting slidably within said housing bore and having an upper end and a lower end, a vertically shiftable support carrying said table portions and camming means, said hollow shaft upper end being connected to said support, said hollow shaft lower end carrying a stop engageable with the lower end of said housing, a second shaft fitting slidably within said hollow shaft and pivotally connected at its lower end to a motor means eccentric crank, said second shaft having an upper end attached to said lower cam retainer plate, biasing means between said second shaft and hollow shaft for causing the joint upper movement of the second shaft and hollow shaft relative to said housing to cause said support to shift upwardly and said table portions to shift into said upper position, said biasing means yielding to permit upper movement of the second shaft relative to the hollow shaft when said stop contacts the lower end of said housing to cause said cam retainer plates to shift upwardly and said table portions to shift into said second position.

4,373,986
GLUING MACHINE

Clendon W. Cone, Glens Falls, N.Y., assignor to Web Graphics, Inc., Glens Falls, N.Y.
Division of Ser. No. 19,332, Mar. 12, 1979, Pat. No. 4,270,967. This application Apr. 13, 1981, Ser. No. 253,460
Int. Cl.³ B65H *39/02;* B31B *1/08*
U.S. Cl. 156—552 17 Claims

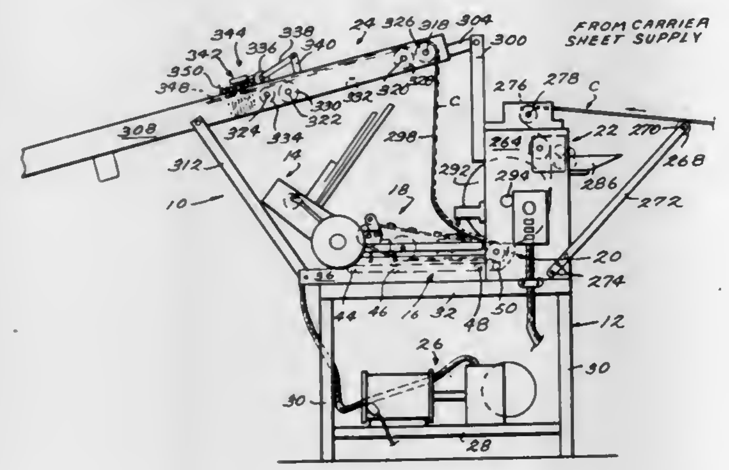

1. A gluing machine for gluing documents onto a continuous carrier sheet so that leading documents overlap trailing documents comprising document feed means for individually, successively feeding documents from a stack toward a first path in unlapped relation, first feed means for receiving said unlapped documents and for overlapping said documents so that the trailing portion of leading documents is held spaced above the leading portion of trailing documents while feeding said documents along said first path, second feed means for feeding a continuous carrier sheet along a second path which intercepts the first path at a predetermined point, gluing means for applying glue at predetermined, spaced apart intervals to said carrier sheet, and attachment means for bringing the leading edge of the documents into contact with the glue applied to said carrier sheet.

4,373,987
ANGLE-ATTACHMENT STABILIZING UNIT

John H. Bopst, III, 409 Chalfonte Dr., Baltimore, Md. 21228
Filed Oct. 1, 1981, Ser. No. 307,365
Int. Cl.³ B44C *7/02;* D06F *75/32*
U.S. Cl. 156—574 2 Claims

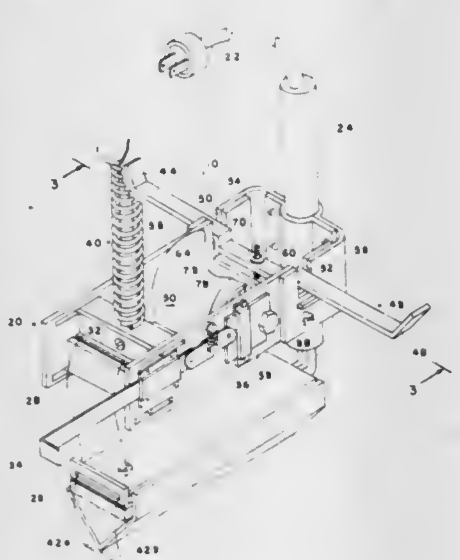

1. In a system for stabilizing a "V"-section soleplate attachment of a manually advanced tape-applying unit as said tape applying unit is in operation applying tape and with said "V"-section soleplate attachment heat sealing tape along a joint in an interior corner formed by first and second wall panels, the "V"-section soleplate attachment including first and second planar portions for conforming respectively to the first and second wall panels on either side of the vertex of said "V"-section, the improvement comprising: means on said tape applying unit for guiding on said first and second wall panels, means for adjustably aligning said guiding means on said first and second wall panels in predetermined relation to the "V"-section soleplate attachment; the predetermined relation being with the means for guiding in-plane with the respective first and second planar portions and spaced therefrom in a direction away from said joint; the means for guiding including a member generally transverse to the direction of said advance and having thereon first and second ends for contacting respective wall panels, the first and second ends spaced apart a distance greater than the greatest distance across said "V"-section; said first and second ends being planar ends and forming a right angle between them, said first and second ends diverging from each other, and the means for adjustably aligning including means on said member for resiliently equalizing pressure on said guiding means during said operation.

4,373,988
METHOD OF GROWING EPITAXIAL LAYERS FROM A LIQUID PHASE

Elisabeth Bauser, Ludwigsburg; Martina Frik, Nuertingen; Karl S. Löchner, Gerlingen, and Laurenz Schmidt, Stuttgart, all of Fed. Rep. of Germany, assignors to Max-Planck-Gesellschaft zur Forderung der Wissenschaften e.V., Göttingen, Fed. Rep. of Germany
Continuation of Ser. No. 613,929, Sep. 16, 1975, abandoned. This application Nov. 9, 1977, Ser. No. 849,944
Claims priority, application Fed. Rep. of Germany, Sep. 20, 1974, 2445146
Int. Cl.³ C30B *19/00*
U.S. Cl. 156—622 7 Claims

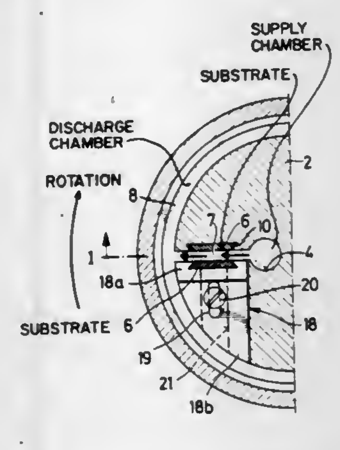

1. Method of economically producing, with high regularity, a layer on at least one substrate by epitaxial growth, comprising the steps of:
- dispersing a layer-forming material in a liquid and providing a predetermined quantity of said liquid containing the layer-forming material in a supply chamber;
- forcing the liquid containing the layer-forming material, under the influence of forces of externally applied to said liquid, from said supply chamber into at least one gap-like channel on a wall of which said substrate is firmly held; and
- causing epitaxial crystal growth to take place on said substrate only while said predetermined quantity of liquid containing the layer-forming material flows continuously and uniformly along said substrate until said supply chamber is empty, said liquid being caused to flow under the influence of said externally applied forces from said supply chamber outward as a substantially unidirectional stream, under pressure from opposition to said forces produced by confinement of said liquid by the gaplike configuration of said channel along and past the surface of said substrate at a rate controllable by said applied forces while under more than atmospheric pressure, and out of said channel to a drain chamber.

4,373,989
CONTROLLED IN SITU ETCH-BACK

James M. Beggs, Administrator of the National Aeronautics and Space Administration, with respect to an invention of; Robert J. Mattauch, Charlottesville, Va., and Alan C. Seabaugh, Olney, Md.
Filed Nov. 30, 1981, Ser. No. 325,933
Int. Cl.³ H01L *21/306*
U.S. Cl. 156—635 19 Claims

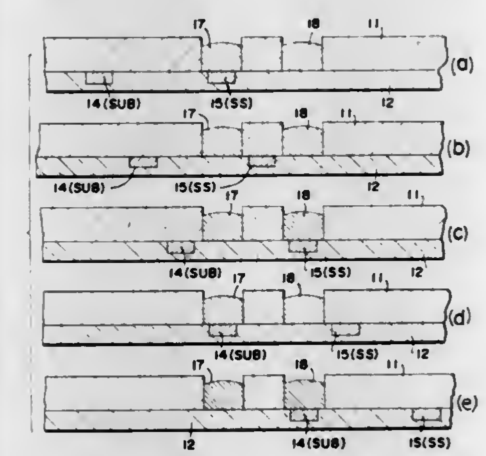

1. A method of etching back the top surface of a substrate with an etch melt, the substrate being one on which a layer of matter is to be grown epitaxially from a growth melt, the steps comprising:
- saturating the etch melt at a temperature, definable as T_{es};
- saturating the growth melt at a temperature, definable as T_{gs} which is greater than T_{es};
- exposing the substrate to the etch melt at a temperature definable as T_e, where $T_{gs} > T_e > T_{es}$ for a selected period, T_e being a temperature at which the depth of etching vs. time of the substrate by the etch melt, saturated at T_{es} is known; and
- after said selected period exposing said substrate to said growth melt, to grow a layer thereon.

4,373,990
DRY ETCHING ALUMINUM

Roy A. Porter, Whitehall, Pa., assignor to Bell Telephone Laboratories, Incorporated, Murray Hill, N.J.
Filed Jan. 8, 1981, Ser. No. 223,333
Int. Cl.³ C23F *1/02;* H01L *21/306;* C03C *15/00, 25/06*
U.S. Cl. 156—643 1 Claim

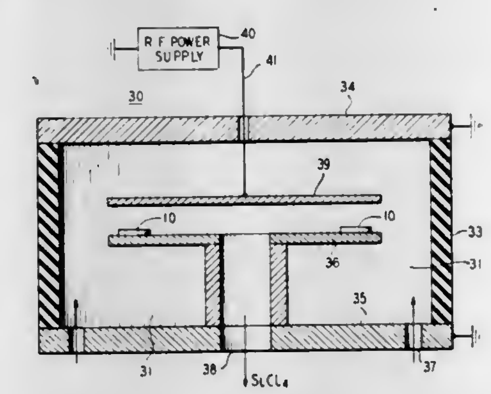

1. A process for etching a desired pattern in a dual layer of aluminum and doped polycrystalline silicon overlying a semiconductive wafer comprising forming over the dual layer an etch-resistant mask apertured in accordance with the desired pattern and exposing the masked wafer to an ambient consisting essentially of substantially pure silicon tetrachloride vapor which has been ionized for a time and at a gas pressure and power density that the desired pattern is etched anisotropically in the dual layer in a single operation.

4,373,991
METHODS AND APPARATUS FOR POLISHING A SEMICONDUCTOR WAFER

Edward L. Banks, Willingboro Township, Burlington County, N.J., assignor to Western Electric Company, Inc., New York, N.Y.
Filed Jan. 28, 1982, Ser. No. 343,604
Int. Cl.³ B24B *5/00, 1/00;* H01L *21/306*
U.S. Cl. 156—645 5 Claims

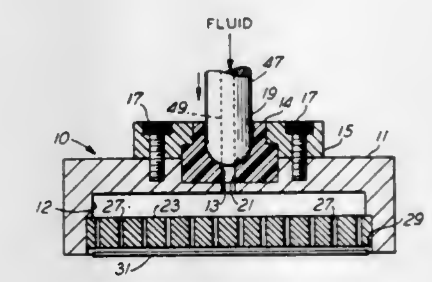

1. A method of polishing a wafer, comprising the steps of:
- capturing the wafer between a holding means and a rotating polishing pad; and
- continuously injecting a liquid under pressure, between the wafer and the holding means to permit free floating rotative motion of the wafer during polishing.

4,373,992
NON-ASBESTOS FLOORING FELT CONTAINING PARTICULATE INORGANIC FILLER, A MIXTURE OF FIBERS AND A BINDER

Alfredo A. Bondoc, Middlesex, N.J., assignor to Tarkett AB, Ronneby, Sweden
Filed Mar. 31, 1981, Ser. No. 249,322
Int. Cl.³ D04H *1/64;* D21F *11/00;* D21H *5/12, 5/18*
U.S. Cl. 162—145 15 Claims

1. Sheet type felt comprising on a dry basis;
(a) between about 1 and about 10 wt. % glass fibers;
(b) between about 3 and about 25 wt.% cellulosic fibers;
(c) between about 3 and about 20 wt.% synthetic organic fibers;
(d) between about 3 and about 70 wt.% particulate inorganic filler;
(e) between about 10 and about 30 wt.% latex binder;
(f) between about 3 and about 80 wt.% calcium hydroxide; and
(g) between about 0.1 and about 10 pounds polymeric flocculating agent per ton of felt.

4,373,993
SLICE LIP FORMING A SMOOTH CONTINUOUS SURFACE

Haruyoshi Fujiwara, Mihara, Japan, assignor to Mitsubishi Jukogyo Kabushiki Kaisha, Japan
Filed Feb. 25, 1981, Ser. No. 237,908
Claims priority, application Japan, Mar. 7, 1980, 55-28722; Jun. 20, 1980, 55-83664
Int. Cl.³ D21F *1/02, 1/04*
U.S. Cl. 162—347 1 Claim

1. A device for forming a sheet-like jet of fluid comprising:
- a main body having a surface adapted to be in contact with said fluid;
- a mating lip having a surface defining with said main body surface a flow passage for the fluid to flow in a flow direction;
- a slice lip having a connecting portion fixed to said main body with a surface, adjacent said main body surface, to be in contact with the fluid and extending coplanar with said main body surface, said slice lip having a tip portion with a surface adapted to be in contact with the fluid and a neck portion connected between said connecting and tip

portions which is flexible with respect to said connecting and tip portions and flexible in a direction orthogonal to the fluid flow direction, said neck portion having a surface adapted to be in contact with the fluid, said tip portion surface and said mating lip surface defining a gap therebetween for forming the sheet-like jet of fluid; and

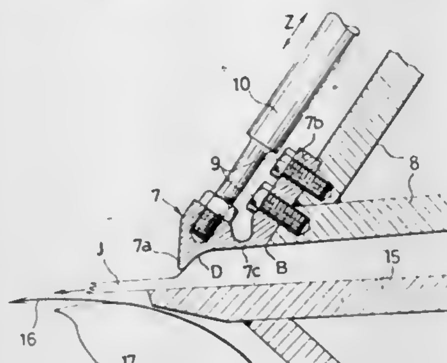

at least one adjusting rod connected to said tip portion which is movable to flex said neck portion and move said tip portion to change a width of said gap;

said surface of said connecting portion, said neck portion and said tip portion forming a smooth continuous surface which converges toward said mating lip surface in the fluid flow direction, in a streamline fashion toward said gap.

4,373,994
PYROLYSIS PROCESS AND APPARATUS
Chang-Kuei Lee, Sewell, N.J., assignor to Occidental Research Corporation, Irvine, Calif.
Filed Sep. 28, 1981, Ser. No. 306,551
Int. Cl.³ C10B *1/04, 3/00, 49/20, 49/22*
U.S. Cl. 201—22 **13 Claims**

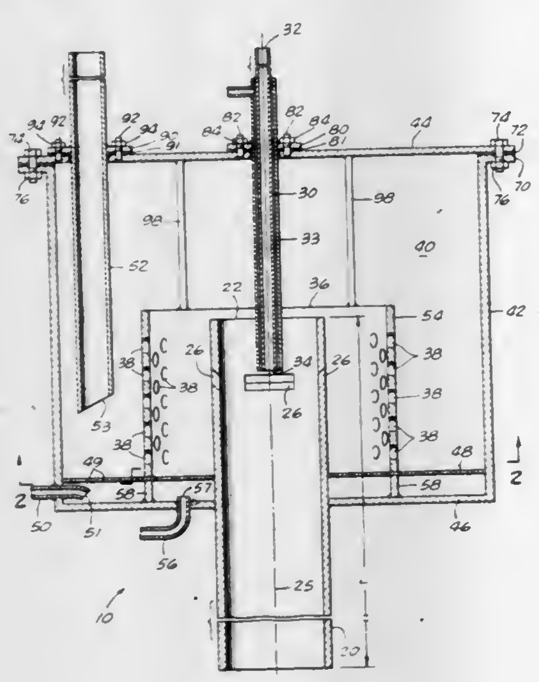

1. A method for controlling the flow of solid heating media into a pyrolysis reactor comprising:

a. introducing a heated particulate solid heating media into an outer section of a fluidization zone which comprises said outer section and an inner section, said outer section being separated from said inner section by a vertically oriented redistributor means having a plurality of openings communicating said outer section with said inner section;

b. fluidizing said heating media in said outer section with a fluidizing gas and causing said heating media to flow through said openings into said inner section, said inner section being formed by said redistributor means and a vertically oriented conduit reactor, said reactor having an inlet, the plane of said reactor inlet being perpendicular to the axis of said reactor, said reactor having a plurality of secondary inlet slots below the plane of said reactor inlet communicating said inner section with the inside of said reactor; and

c. fluidizing said heating media in said inner section with a fluidizing gas and causing a first part of said heating media to flow over said reactor inlet and then downwardly in column flow along the inside surface of said reactor, and simultaneously causing a second part of said heating media to flow through said secondary inlet slots into said reactor thereby augmenting the downwardly column flow of said first part of said heating media along said reactor inside surface in such a way that a continuous and substantially circumferentially uniform downwardly flowing column of said heating media is formed below said secondary inlet slots.

4,373,995
PYROLYSIS SYSTEM UTILIZING PYROLYTIC OIL RECYCLE
Mack D. Bowen, 910 Reed Rd., SE., Smyrna, Ga. 30080, and Kenneth R. Purdy, 1485 Leafmore Ridge, Decatur, Ga. 30033
Division of Ser. No. 212,041, Dec. 3, 1980, Pat. No. 4,317,703. This application Oct. 5, 1981, Ser. No. 308,818
Int. Cl.³ C10B *15/00, 39/06, 49/06, 53/02*
U.S. Cl. 202—95 **12 Claims**

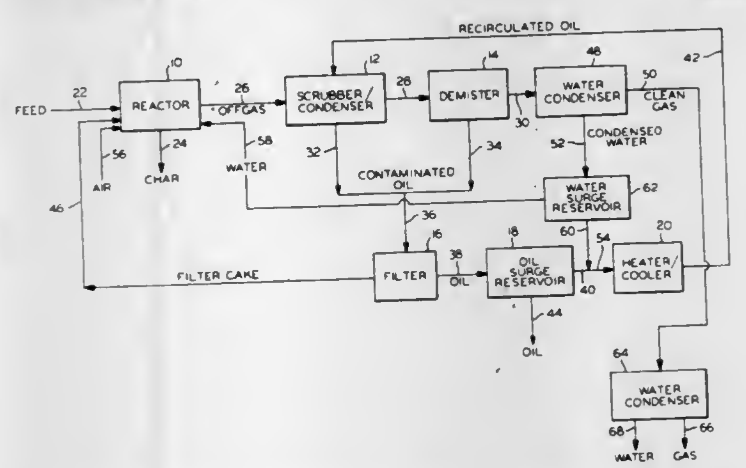

1. A system for carrying out the continuous pyrolysis of a feed of cellulosic material capable of pyrolyzing to a solid residue and a gaseous mixture, the solid residue comprising a significant amount of fine particulates and the gaseous mixture comprising fractions that are noncondensible and condensible, the latter including a substantial amount of water vapor, the combination including:

(a) a reactor for continuously effecting the pyrolysis of such feed, as a descending packed bed, said reactor having inlets for feed, filter cake, reaction air and quenching water, and having outlets for offgases and the solid residue product;

(b) oil scrubber/condenser means connected to said offgas outlet of said reactor;

(c) water condenser means in the offgas stream from said scrubber/condenser means;

(d) means for recycling condensate from said water condenser means to said quench water inlet of said reactor;

(e) filter means in the liquid stream from said scrubber/condenser means;

(f) means for recycling filter cake from said filter means to said filter cake inlet of said reactor;

(g) means for recycling pyrolytic oil from said filter means to said oil scrubber/condenser means for use as the scrubbing medium; and

(h) means for controlling the rates of recycle of the condensed water, filter cake and pyrolytic oil, whereby the system can be used to produce an enriched gaseous product and pyrolytic oil from such a cellulosic material.

4,373,996
APPARATUS FOR PRODUCING FRESH WATER FROM SEA WATER
Saburo Maruko, 430-3 Kamiwada, Yamato-Shi, Kanagawa-Ken, Japan
Filed Mar. 4, 1981, Ser. No. 240,597
Claims priority, application Japan, Mar. 4, 1980, 55-26104
Int. Cl.³ C02F *1/06, 1/14*
U.S. Cl. 202—173 **3 Claims**

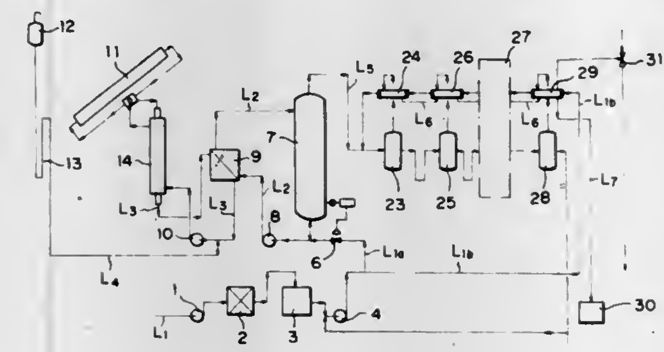

1. An apparatus for producing fresh water from sea water comprising:

a solar heat collector having an inlet and an outlet,

closed loop conduit means interconnecting said inlet and outlet of said collector for passing therethrough a high temperature liquid,

a first pump in said closed loop conduit means,

a heat exchanger having first and second inlets and first and second outlets, said first inlet and first outlet being connected to said closed loop conduit means for passing said high temperature liquid through one side of said exchanger,

a vertical accumulator having a bottom, a lower portion, an upper portion, and a top,

a first sea water feed line connected to said bottom of said accumulator,

a pressure regulator in said first sea water feed line upstream of said bottom for regulating the pressure in said accumulator to a predetermined pressure above atmospheric pressure,

a second sea water line connected from said first sea water feed line adjacent said bottom to said second inlet of said exchanger,

a second pump in said second sea water line,

means for shutting down said second pump when the sun is not shining,

a third sea water line from said second outlet of said exchanger to said upper portion of said accumulator,

an evaporator, and

a fourth sea water line from said top of said accumulator to said evaporator,

said upper portion of said accumulator receiving higher temperature sea water from said exchanger when said second pump is operating, said lower portion holding lower temperature sea water,

whereby when the sun is shining, a proportion of higher temperature sea water in said accumulator increases displacing the lower temperature sea water therein out of said bottom and when the sun is not shining, higher temperature sea water is fed from the upper portion of the accumulator to said evaporator by being pushed out by said lower temperature sea water coming in said bottom so that said evaporator is constantly supplied with higher temperature sea water regardless of whether the sun is shining or not.

4,373,997
APPARATUS FOR THE TRANSFER AND QUENCHING OF COKE
Claus Flockenhaus; Manfred Galow, both of Essen; Joachim F. Meckel, Heiligenhaus, and Horst G. Joseph, Essen, all of Fed. Rep. of Germany, assignors to Didier Engineering GmbH, Fed. Rep. of Germany
Division of Ser. No. 108,008, Dec. 28, 1979, Pat. No. 4,282,068. This application Jan. 23, 1981, Ser. No. 227,749
Claims priority, application Fed. Rep. of Germany, Jan. 2, 1979, 2900079
Int. Cl.³ C10B *39/04*
U.S. Cl. 202—230 **4 Claims**

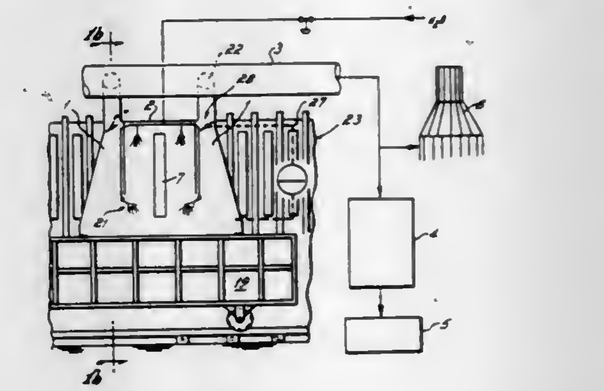

1. In a coke quenching system, the combination comprising a coke quenching car for receiving hot coke from a coke oven and transferring it from the coke oven, a hood located in close proximity above the quenching car, and means for moving the hood independently of but with the quenching car, the hood including in the interior thereof a central chamber closed at its top, nozzle means associated with said central chamber for spraying the coke in the quenching car immediately below said central chamber with water to quench the coke, a pair of lateral baffles extending vertically downwardly from the top of the hood and defining with the end walls of the hood a pair of lateral chambers, said lateral chambers being separated from said central chamber by said lateral baffles at their upper portions but being in fluid communication therewith at their lower portions such that the quenching offgases rise in said central chamber and are then forced to flow around the lower ends of the lateral baffles and into said lateral chambers, vertical exhaust shafts connected to the tops of the lateral chambers for creating an updraft in said lateral chambers, and nozzles means inside said lateral chambers for condensing the upwardly flowing offgases resulting from the quenching of the coke in the quenching car.

4,373,998
ASCENSION PIPE HEAT SHIELD
Earl C. Hetrick, Natrona Heights, and Donald T. Winter, Pittsburgh, both of Pa., assignors to Koppers Company, Inc., Pittsburgh, Pa.
Filed Oct. 26, 1981, Ser. No. 315,066
Int. Cl.³ C10B *27/06, 41/08*
U.S. Cl. 202—258 **21 Claims**

1. In combination, a heated vertical pipe and a device for providing enhanced heat shielding on an inward side of the heated vertical pipe which projects from a pipe supporting structure comprising:

(a) a generally cylindrical lower wall section spaced from and peripherally enclosing the pipe in generally concentric arrangement so as to form a peripheral lower vertical air space between itself and the pipe;

(b) means for remotely mounting said lower wall section above the pipe supporting structure as to establish lower fluid communication between said lower vertical air space and ambient air;

(c) an arcuate upper wall section aligned with and connected end to end to the cylindrical lower wall section and in-

wardly displaced from the pipe so as to form an upper vertical air space vertically contiguous with said lower vertical air space;

(d) a lower interior vertical wall section inwardly displaced from the pipe below said arcuate upper wall section so as to partition said peripheral lower vertical air space into a

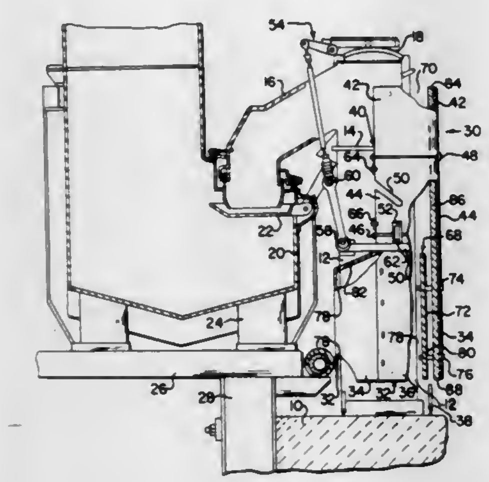

warmer air flow channel peripherally adjacent to the pipe and a cooler air flow channel remote from the pipe; and

(e) closure means for outwardly blocking the warmer air flow channel, such that ambient air is drawn upwardly first through said lower vertical air space then through said upper vertical air space and is then upwardly discharged so as to continuously dissipate pipe heat.

4,373,999

DISTILLATION OF BUTINEDIOL-1,4

Helmut Westernacher, Haltern, and Karl Aertken, Dülmen, both of Fed. Rep. of Germany, assignors to GAF-Hüls Chemie GmbH, Marl, Fed. Rep. of Germany

Filed Mar. 30, 1982, Ser. No. 363,550

Claims priority, application Fed. Rep. of Germany, Apr. 8, 1981, 3114153

Int. Cl.^{3} B01D *3/34;* **C07C** *33/046*

U.S. Cl. 203—6 **5 Claims**

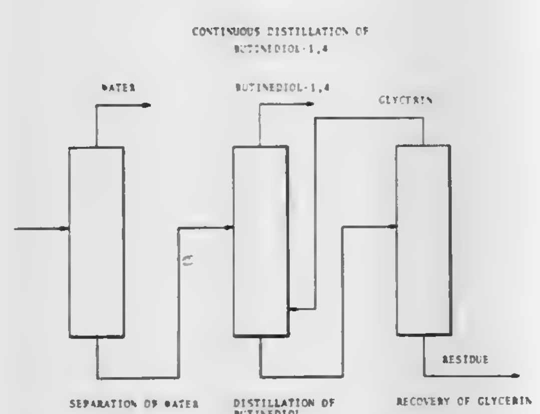

1. In the process for purifying butinediol-1,4 by distillation, the improvement comprising:

adding glycerin to the butinediol-1,4 to be distilled.

4,374,000

METHOD FOR CONTROLLING THE FORMATION OF POLYMER ACCUMULATIONS DURING DISTILLATION OF A VINYLAROMATIC MONOMER

Marshall W. Abernathy, Big Spring, Tex., and Darrell E. Bailey, Prairieville, La., assignors to Cosden Technology, Inc., Dallas, Tex.

Filed Feb. 2, 1981, Ser. No. 230,617

Int. Cl.^{3} B01D *3/34*

U.S. Cl. 203—9 **22 Claims**

1. A method for controlling the formation of polymer accumulations on the underside of a seal pan underneath a downcomer in a downcomer-equipped distillation column used for distillative purification of a vinylaromatic monomer, said method comprising:

accumulating liquid phase material containing an effective polymerization inhibiting concentration of polymerization inhibitor in the seal pan; and

providing liquid pervious weep hole means through said seal pan spaced and dimensioned to provide a controlled quantity of polymerization inhibitor-containing liquid phase material from the seal pan through said weep hole means to the underside of the seal pan.

21. A method for the distillative purification of a vinylaromatic monomer comprising the steps of:

(a) distilling said crude vinylaromatic monomer to separate a recycle overhead fraction comprising lower boiling materials from a recycle bottoms fraction comprising vinylaromatic monomer and higher boiling materials,

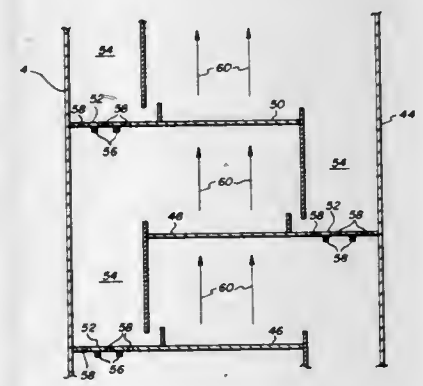

(b) distilling said recycle bottoms fraction to separate a finish overhead fraction comprising substantially pure vinylaromatic monomer from a finish bottoms fraction comprising higher boiling materials, and

(c) providing liquid pervious weep hole means through the seal pans of a distillation column used for at least one of said distilling steps spaced and dimensioned to provide a controlled quantity of inhibitor-containing liquid phase material through said weep hole means,

wherein the formation of polymer accumulations on the underside of seal pans underneath the downcomers in downcomer-equipped distillation columns used for said distillative purification is controlled by accumulating liquid phase material containing an effective polymerization inhibiting concentration of polymerization inhibitor in said seal pans and allowing a controlled quantity of polymerization inhibitor-containing liquid phase material from said seal pans to seep through said weep hole means to the underside of said seal pans.

4,374,001

ELECTROLYTIC PRINTING

William E. Bernier, Endicott, N.Y., assignor to International Business Machines Corporation, Armonk, N.Y.

Filed Feb. 5, 1981, Ser. No. 231,832

Int. Cl.^{3} G01D *15/06, 15/34*

U.S. Cl. 204—2 **24 Claims**

1. An electrochromic printing media which comprises a substrate coated on at least one surface thereof with about 2 to about 100 milligrams for each 8½" by 11" area of said substrate of a leuco dye color forming material of the formula:

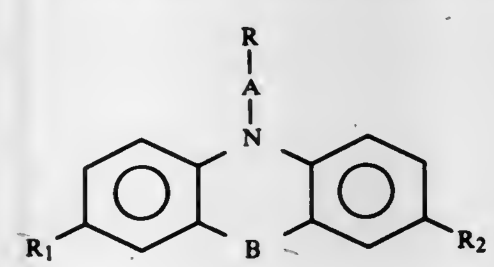

wherein A is C═O or SO_2; B is S or O; each R_1 and R_2 individually is a group capable of donating an electron; and R is an organic radical such that in the presence of bromine and upon being subjected to a voltage, the leuco dye converts to a colored dye upon splitting of the A—R group; and coated with at least about 10 milligrams for each 8½" by 11" area of said substrate of said leuco dye; and wherein the weight ratio of bromide to leuco dye is about 1 to 1 to about 30 to 1.

4,374,002

METHOD FOR PRODUCING HIGHLY REFLECTIVE METAL SURFACES

Jones B. Arnold, Knoxville; Philip J. Steger, and Ralph R. Wright, both of Oak Ridge, all of Tenn., assignors to The United States of America as represented by the United States Department of Energy, Washington, D.C.

Filed Mar. 4, 1982, Ser. No. 354,571

Int. Cl.^{3} C25D *1/06*

U.S. Cl. 204—7 **10 Claims**

8. A method of producing mirror surfaces, comprising:

(a) electrolessly depositing nickel on an article to form an amorphous nickel surface thereon,

(b) diamond-machining said surface to increase its smoothness and optical reflectivity,

(c) passivating the machined nickel surface to render it incapable of bonding to electroplated nickel,

(d) contacting the passivated nickel surface with a wetting agent,

(e) electrodepositing nickel on the passivated surface in an aqueous nickel sulfamate plating bath substantially free of chlorides to form thereon a layer of electroplated nickel whose inner surface is a replica of said passivated surface, and

(f) separating said electroplated layer intact from said passivated surface.

4,374,003

FINE LINE CIRCUITRY PROBES AND METHOD OF MANUFACTURE

William P. Dugan, Pomona, Calif., assignor to General Dynamics, Pomona Division, Pomona, Calif.

Division of Ser. No. 125,814, Feb. 28, 1980. This application Jul. 2, 1981, Ser. No. 279,890

Int. Cl.^{3} C25D *1/08, 5/02, 5/54*

U.S. Cl. 204—11 **16 Claims**

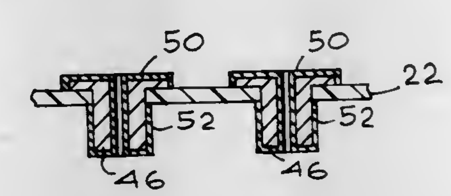

1. A method for the production of a circuit board comprising:

providing apertures in a selected plural layer base;

coating the base and the apertures with a conductive material;

electroplating the coated board to produce probe precursors in the apertures;

removing the electroplate from the outer surfaces of said base;

masking the surface of said base in a selected pattern;

etching the unmasked surface on at least one side of the masked board;

removing at least one selected layer of the plural layer forming the base to expose the probes.

4,374,004

METHOD AND APPARATUS FOR SURFACE-TREATING PREDETERMINED AREAS OF A SURFACE OF A BODY

Amir Salama, Cartierville, Canada, assignor to Northern Telecom Limited, Montreal, Canada

Filed Jun. 29, 1981, Ser. No. 278,744

Int. Cl.^{3} C25D *5/02*

U.S. Cl. 204—15 **12 Claims**

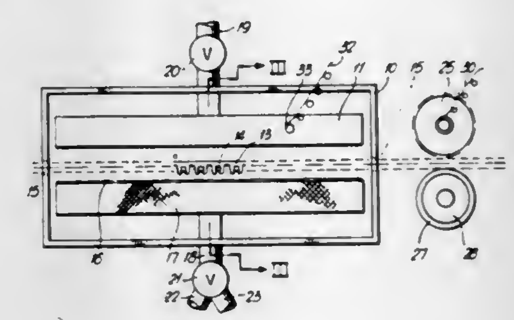

1. Apparatus for electroplating one surface of each of a plurality of spaced apart rectangular cross-section terminal pins, having front, back and side surfaces, comprising:

a tank;

means for supporting said pins in a predetermined position in said tank;

means for ejecting a plating solution towards the front surface of each pin;

an anode in the flow path of the plating solution, and means for supplying electrical power to said anode and to said pins;

an inflatable member in said tank positioned adjacent to the rear surfaces of the pins, said inflatable member having a thin flexible, extensible, front surface of elastomeric material for contacting the back and side surfaces of the pins;

means for feeding an inflation gas to said inflatable member;

said flexible front surface extended on inflation of said inflatable member to wrap around said pins in contact with the back and side surfaces of the pins, to expose only the front surfaces of the pins to the plating solution.

4,374,005

METHOD FOR FABRICATING A TRANSVERSE MAGNETIC PRINTING HEAD

Bernard D. Nathan, Liverpool, and Donald R. Witter, Skaneateles, both of N.Y., assignors to General Electric Company, Schenectady, N.Y.

Continuation-in-part of Ser. No. 40,586, May 21, 1979, Pat. No. 4,291,314. This application Jul. 1, 1981, Ser. No. 279,372

Int. Cl.^{3} C25D *5/02, 5/48*

U.S. Cl. 204—15 **45 Claims**

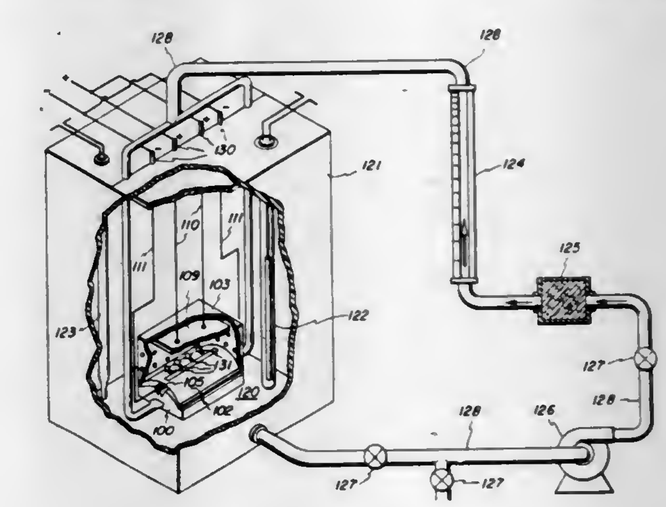

1. A method of manufacturing a magnetic printing head for

recording latent magnetic images on a magnetizable recording medium moving relative to said head, comprising the steps of:

placing a plurality of nonintersecting, conductive lines on an insulating substrate such that said lines cross an elongated gap in said substrate, said lines being insulated along those line portions crossing said gap; and

electrodepositing a magnetically permeable material between said conductive lines in the region where said lines cross said gap.

4,374,006

ELECTROLYTIC BATH FOR THE DEPOSITION OF HIGH GLOSS WHITE GOLD COATINGS

Eberhard Bitzer, Ebingen; Wilhelm Aichinger, Schwäbisch Gmünd, and Gerhard Steinhilber, Aalen, all of Fed. Rep. of Germany, assignors to Degussa Aktiengesellschaft, Frankfurt, Fed. Rep. of Germany

Filed Apr. 1, 1981, Ser. No. 249,985

Claims priority, application Fed. Rep. of Germany, Apr. 3, 1980, 3013030

Int. Cl.^{3} C25D *3/62*

U.S. Cl. 204—43 G **6 Claims**

1. An electrolytic bath for the deposition of high gloss white gold coating comprising 2–10 g/l of gold in the form of a sulfite complex, 2–40 g/l of alkali sulfite, 2–40 g/l of a complexing agent, 1–10 g/l of nickel and 1–20 g/l of cadmium in each case in the form of a water soluble slat and 0.5–10 g/l of orotic acid, a derivative of orotic acid or a salt of orotic acid.

4,374,007

TRIVALENT CHROMIUM ELECTROPLATING SOLUTION AND PROCESS

Donald J. Barclay, and James M. L. Vigar, both of Winchester, England, assignors to International Business Machines Corporation, Armonk, N.Y.

Filed Mar. 3, 1981, Ser. No. 239,919

Claims priority, application United Kingdom, Mar. 10, 1980, 8008034; European Pat. Off., Feb. 16, 1981, 81101075.0

Int. Cl.^{3} C25D *3/06*

U.S. Cl. 204—51 **13 Claims**

1. An aqueous chromium electroplating solution comprising chromium (III) and thiocyanate ions and a supporting electrolyte which is chloride free, and a mixture of sodium and potassium sulphate in a concentration sufficient to provide electrical conductivity for the plating process, the concentration of sodium sulphate being in the range of about 0.1 to 1 Molar, and the concentration of potassium sulphate being about 1 Molar.

4,374,008

PROCESS FOR SEPARATING TUNGSTEN FROM COINAGE METALS

Samuel Natansohn, Sharon, and Gary Czupryna, Salem, both of Mass., assignors to GTE Laboratories Incorporated, Waltham, Mass.

Filed Jun. 1, 1981, Ser. No. 269,192

Int. Cl.^{3} C25C *1/08, 1/22*

U.S. Cl. 204—109 **11 Claims**

1. A process for separately recovering tungsten and a coinage metal from alloys or mixtures thereof comprising electrowinning said coinage metal from aqueous nitrate electrolyte solution contained in an electrowinning cell having an anode, comprising said alloy or mixture of tungsten and a coinage metal, and a cathode; wherein said electrolyte solution is maintained substantially free of dissolved tungsten by contacting, in a chamber separate from said electrowinning cell, said electrolyte solution with an anion exchange resin to selectively remove tungsten therefrom to deposit said coinage metal at said cathode in a form substantially free of tungsten contamination

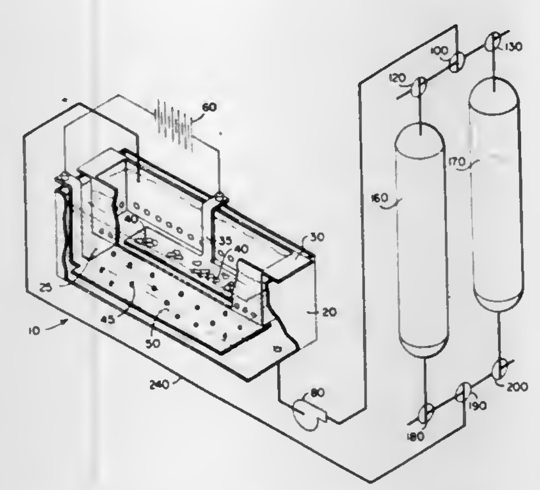

and separately recovering said selectively removed portion of tungsten from said anion exchange resin.

4,374,009

ELECTROCHEMICAL POST TREATMENT OF PERPENDICULAR MAGNETIC RECORDING MEDIA

Tu Chen, Saratoga, Calif., and Pietro L. Cavallotti, Milan, Italy, assignors to Xerox Corporation, Stamford, Conn.

Filed Sep. 28, 1981, Ser. No. 306,126

Int. Cl.^{3} C25F *3/00*

U.S. Cl. 204—129.1 **4 Claims**

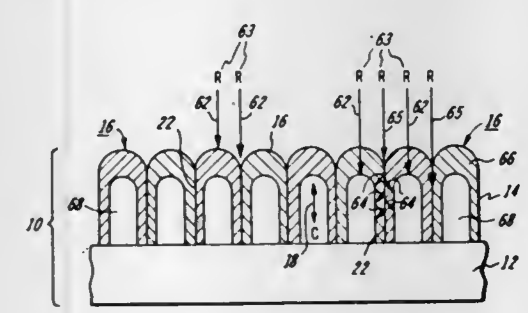

1. A method of post treatment to a continuous thin film magnetic medium comprising a substrate upon which is deposited a thin magnetic layer comprising acicular shaped crystalline magnetic particles with the crystallographic "c" axis of the crystal in each particle oriented parallel to the longitudinal axis of the particle acicula and the longitudinal axis of the acicular particles oriented substantially normal to the plane of said magnetic layer, said post treatment effectively increasing the separation between magnetic particles and thereby increasing their coercivity while decreasing their demagnetization field of the film, said method comprising the step of utilizing enhanced grain boundary reaction at the interganular boundary of said particles to achieve particle separation effectively either by electrochemical charging by cathodic action with a solution containing a reagent and immersing the magnetic layer into said solution thereby causing diffusion of the reagent into the outer portions of said acicular particles comprising the magnetic layer or by electrochemical etching by anodic action with a solution containing an agent and immersing the magnetic layer into said solution thereby causing removal of an outer portion of said acicular particles comprising the magnetic layer.

4,374,010

PHOTOCHEMICAL SEPARATION OF ISOTOPES

Andreas C. Vikis, Orleans, Canada, assignor to Canadian Patents & Development Limited, Ottawa, Canada

Filed Jan. 30, 1979, Ser. No. 7,708

Int. Cl.^{3} B01D *59/00*

U.S. Cl. 204—157.1 R **9 Claims**

1. A process for the photochemical separation of at least one of the isotopes carbon-13 and oxygen-18 comprising:

(a) irradiating carbon monoxide with selected band-widths of 123.58 nm resonance radiation of krypton to selectively excite at least one of $^{13}C^{16}O$ and $^{12}C^{18}O$ species without significant excitation of $^{12}C^{16}O$, said band-width being selected from

(i) the slightly broadened and reversed krypton 80916.76±15 cm^{-1} radiation, which excites both $^{12}C^{18}O$ and $^{13}C^{16}O$, and

(ii) the moderately sharp krypton line 80916.76±3 cm^{-1} which excites only $^{13}C^{16}O$,

(b) permitting reaction of the excited carbon monoxide species with a second reactant to occur, the reaction product being enriched in at least one of carbon-13 and oxygen-18, and

(c) separating the isotopically-enriched products from the reaction.

4,374,011

PROCESS FOR FABRICATING NON-ENCROACHING PLANAR INSULATING REGIONS IN INTEGRATED CIRCUIT STRUCTURES

Madhukar B. Vora, Los Gatos, and Werner F. Rust, Mountain View, both of Calif., assignors to Fairchild Camera & Instrument Corp., Mountain View, Calif.

Filed May 8, 1981, Ser. No. 261,843

Int. Cl.^{3} H01L *27/04*

U.S. Cl. 204—192 EC **14 Claims**

1. A method for fabricating an insulating region in conjunction with an integrated circuit structure having a substrate, the method comprising:

removing a first portion of the substrate to create an opening wherein the insulating region is to be formed;

beginning to deposit insulating material across the substrate and in the opening;

continuing to deposit insulating material while simultaneously removing insulating material from generally horizontal surfaces and redepositing it on generally vertical surfaces to create a substantially planar layer of insulating material across the substrate and over the opening; and

ceasing to deposit insulating material when the substantially planar layer is a desired thickness.

4,374,012

METHOD OF MAKING SEMICONDUCTOR DEVICE HAVING IMPROVED SCHOTTKY-BARRIER JUNCTION

Michael G. Adlerstein, Wellesley, Mass., assignor to Raytheon Company, Lexington, Mass.

Continuation of Ser. No. 75,353, Sep. 13, 1979, abandoned, which is a division of Ser. No. 833,317, Sep. 14, 1977, Pat. No. 4,197,551. This application Jun. 18, 1981, Ser. No. 275,081

Int. Cl.^{3} C23C *15/00*

U.S. Cl. 204—192 SP **10 Claims**

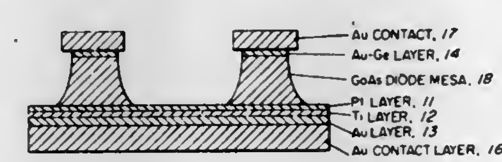

1. The method comprising the steps of:

providing a body of semiconductor material;

sputtering a Schottky-barrier forming metal upon at least a portion of a surface of said body of semiconductor material at a sputtering power level sufficient to cause alloying between a portion of said semiconductor material and at least a portion of the sputtered Schottky-barrier forming metal;

sputtering a layer of refractory metal over said sputtered Schottky-barrier forming metal; and

sputtering a layer of highly conductive metal over said layer of refractory metal.

4,374,013

OXYGEN STABILIZED ENZYME ELECTRODE

Sven-Olof Enfors, Markörvägen 2, S-191 41 Sollentuna, Sweden

Filed Mar. 3, 1981, Ser. No. 239,979

Claims priority, application Sweden, Mar. 6, 1980, 8001711

Int. Cl.^{3} C12Q *1/26*

U.S. Cl. 204—195 B **10 Claims**

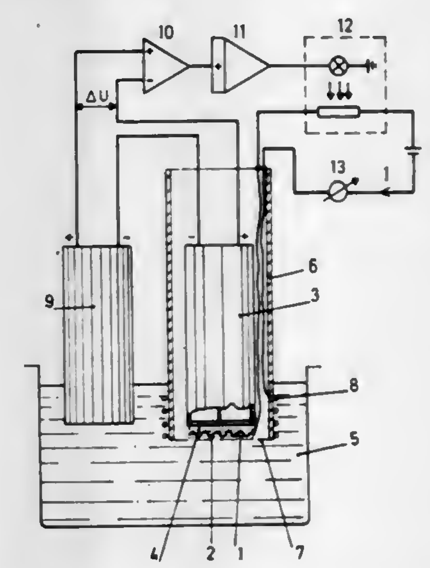

1. Enzyme electrode for the analysis of a substrate in a sample comprising:

(a) an oxygen electrode on which or close to the sensitive surface of which at least one enzyme is immobilized, said oxygen electrode producing a signal responsive to the consumption of oxygen by the reaction between the enzyme and the substrate,

(b) means for producing a reference signal,

(c) means for electrolytically producing oxygen by the electrolysis of water, comprising an anode located close to the at least one enzyme, and a cathode,

(d) means for controlling the electrolysis current between the anode and cathode for producing oxygen in response to the difference between the signal from the oxygen electrode and the reference signal so that the limiting parameter for the enzyme reaction is the enzyme activity, and

(e) means for measuring the electrolysis current.

4,374,014

HIGH PRESSURE ELECTROLYTIC OXYGEN GENERATOR

Robert E. Smith, and Donald R. Gormley, both of Annapolis, Md., assignors to The United States of America as represented by the Secretary of the Navy, Washington, D.C.

Filed Mar. 20, 1981, Ser. No. 245,819

Int. Cl.^{3} C25B *9/04, 11/03, 13/06*

U.S. Cl. 204—260 **10 Claims**

1. An electrolytic gas generator comprising:

a housing;

an electrode assembly supported within the housing, said electrode assembly including anode and cathode elements separated by an asbestos separator; and

means for transferring electrical currents between said housing and said electrode assembly, wherein said means for transferring electrical currents include a ring portion circumferentially engaging said electrode assembly, radi-

ally extending finger portions extending from said ring portion, and flange portions connected to said finger

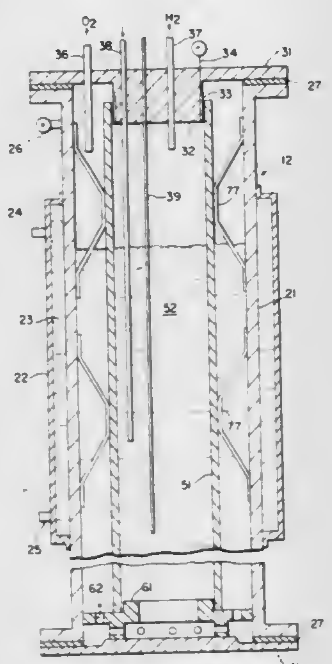

portions for contiguously engaging the inner surface of said housing.

4,374,015

PROCESS FOR THE LIQUEFACTION OF COAL

Michael R. Brule, Oklahoma City, Okla., assignor to Kerr-McGee Corporation, Oklahoma City, Okla.

Filed Mar. 9, 1981, Ser. No. 241,578

Int. Cl.³ C10G *1/00, 1/06*

U.S. Cl. 208—8 LE **21 Claims**

1. In a coal liquefaction process wherein a liquefaction solvent that is at least partially distillable is used in a liquefaction zone to yield a product from which a slurry is recovered that comprises distillable and substantially nondistillable coal liquefaction products and an insoluble residue, the improvement which comprises:

contacting said slurry with a first extraction solvent comprising a polycyclic aromatic hydrocarbon containing at least one less substituted or unsubstituted carbon atom than said liquefaction solvent at a first elevated temperature level and pressure level such that the reduced temperature of said first extraction solvent is greater than about 0.7 and the reduced pressure of said first extraction solvent is greater than about 0.4 to effect a separation of said slurry into a substantially solids-free fraction comprising coal liquefaction products and first extraction solvent and a solids-containing fraction;

separating at least a portion of said first extraction solvent from said substantially solids-free fraction to provide a first extraction solvent-lean coal liquefaction product fraction;

contacting said first extraction solvent-lean coal liquefaction product fraction with a second extraction solvent having at least one less substituted or unsubstituted carbon atom than said first extraction solvent at a second elevated temperature level and pressure level such that the reduced temperature of said second extraction solvent is greater than about 0.7 and the reduced pressure of said second extraction solvent is greater than about 0.4 to effect a separation of said coal liquefaction products into a second light phase and a second heavy phase comprising substantially nondistillable coal-derived compounds at least a portion of which are capable of functioning as a coal solvent and some second extraction solvent;

recovering said substantially nondistillable coal-derived compounds; and

introducing at least a portion of said substantially nondistillable coal-derived compounds into said liquefaction zone to supplant a portion of said liquefaction solvent in said liquefaction process.

4,374,016

PROCESS FOR HYDROGENATING COAL AND COAL SOLVENTS

Arthur R. Tarrer, and Ketan G. Shridharani, both of Auburn, Ala., assignors to Air Products and Chemicals, Inc., Allentown, Pa.

Filed Aug. 24, 1981, Ser. No. 295,896

Int. Cl.³ C10G *1/06, 1/00*

U.S. Cl. 208—10 **6 Claims**

1. In a process for hydrogenating coal wherein a coal solvent is hydrogenated in the presence of a hydrogenation catalyst and that hydrogenated solvent in turn hydrogenates the coal, the improvement comprising carrying out the solvent hydrogenation in the presence of an iron sulfide catalyst of increased catalytic activity prepared by the reaction of ferric oxide with hydrogen sulfide within a temperature range of 260° to 315° C. in a non-oxidizing atmosphere.

4,374,017

HEAT FLUX CONTROL TECHNIQUE

John H. Barney, Golden, Colo., assignor to Tosco Corporation, Los Angeles, Calif.

Filed Oct. 24, 1980, Ser. No. 200,395

Int. Cl.³ C10G *1/02*

U.S. Cl. 208—11 R **9 Claims**

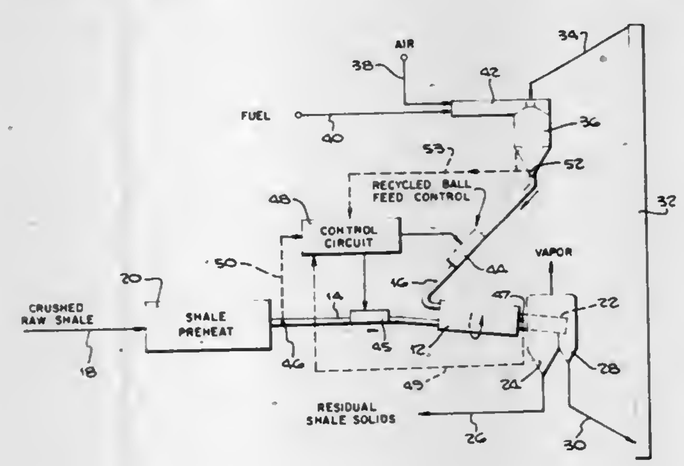

1. In an optimized method for retorting carbonaceous material, involving the addition of recycled heat-carrying bodies to carbonaceous material, and moving the carbonaceous material and recycled heat-carrying bodies in heat-transferring proximity with one-another to raise the temperature of the carbonaceous material to retorting heat levels, wherein the heat-carrying bodies have a critical weight ratio of recycled heat carrying bodies to carbonaceous material, below which chipping and cracking of such heat-carrying bodies may readily occur, the improvement comprising:

experimentally determining the critical weight ratio of recycled heat-carrying bodies to carbonaceous material, expressed as a continuously increasing function of temperature difference having a substantial positive slope with increasing temperature differences;

determining the difference in temperature between the recycled bodies and the carbonaceous material; and

providing a weight ratio which is greater than but substantially equal to said critical value for the temperature difference present in the process.

4,374,018

METHOD FOR PRODUCING UPGRADED PRODUCTS FROM A HEAVY OIL FEED

John C. C. Tao, Perkiomenville, Pa., assignor to Air Products and Chemicals, Inc., Allentown, Pa.

Filed Apr. 20, 1981, Ser. No. 255,877

Int. Cl.³ C10G *47/04, 47/22*

U.S. Cl. 208—112 **8 Claims**

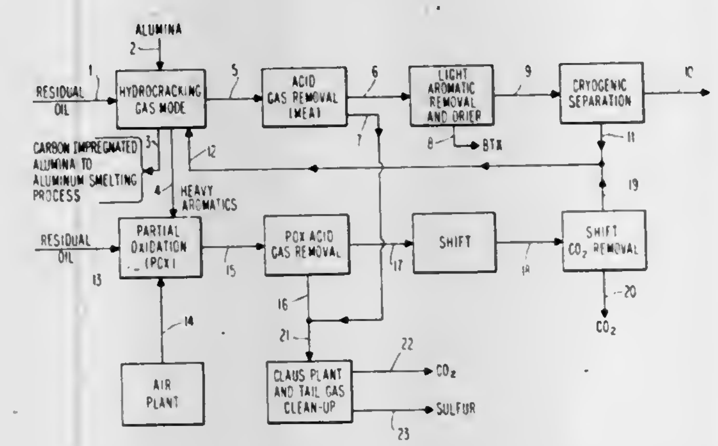

1. A method for upgrading a heavy oil feed and producing a product synthetic natural gas and a product of carbon-coated alumina particles therefrom, comprising cracking said heavy oil in the presence of hydrogen in a particulate alumina bed at 1200°-1600° F., 300-700 psia total pressure, and 50-200 psia partial pressure hydrogen, removing from said bed carbon-coated alumina particles as a product at least a portion of which is used for the production of aluminum chloride, a heavy aromatics stream, and a light gas stream, removing from said light gas stream acid gas contaminants, light aromatics, water, and hydrogen, to produce a synthetic natural gas product, and producing hydrogen for said cracking reaction by partially oxidizing a portion of said heavy oil and said separated heavy aromatic stream to produce a synthesis gas which is treated to remove acid gas components and is shifted to increase its hydrogen content and recycling hydrogen separated from said light gas stream to said cracking reaction.

4,374,019

PROCESS FOR CRACKING HIGH-BOILING HYDROCARBONS USING HIGH RATIO OF CATALYST RESIDENCE TIME TO VAPOR RESIDENCE TIME

William P. Hettinger, Jr., Russell, and Stephen M. Kovach, Ashland, both of Ky., assignors to Ashland Oil, Inc., Ashland, Ky.

Filed May 13, 1981, Ser. No. 263,398

Int. Cl.³ C10G *11/18*

U.S. Cl. 208—120 **70 Claims**

1. A process for converting carbo-metallic oils to lighter products comprising:

(a) providing a converter feed containing 650° F.+ material, at least a portion of said 650° F.+ material containing components which will now boil below about 1025° F., said 650° F.+ material further being characterized by a carbon residue on pyrolysis of at least about one and by containing at least about 4 ppm of Nickel equivalents of heavy metals;

(b) bringing hot cracking catalyst particles into contact with said feed to form a stream comprising a suspension of said catalyst in said feed, at least a portion of said feed remaining unvaporized and depositing as a liquid on said catalyst particles, and causing the resulting stream to flow through a progressive flow reactor having an elongated reaction chamber which is at least in part vertical or inclined for a predetermined vapor residence time in the range of about 0.5 to about 10 seconds, at a temperature of about 900° F. to about 1400° F. and under a pressure of about 10 to about 50 pounds per square inch absolute sufficient for causing a conversion per pass in the range of about 50% to about 90% while producing coke in amounts in the range of about 6 to about 14% by weight based on fresh feed, and laying down coke on the catalyst in amounts in the range of about 0.3 to about 3% by weight, the ratio of residence time of catalyst in the reactor to residence time of vapor in the reactor being maintained in the range of about 1.2:1 to about 12:1, whereby the catalyst carrying liquid feed is retained within the reactor for a sufficiently long time for at least a portion of the liquid carried by the catalyst to be cracked into lighter vapor products;

(c) separating said catalyst from the resultant cracking products;

(d) stripping adsorbed hydrocarbons from said separated catalyst;

(e) regenerating said catalyst with oxygen-containing combustion-supporting gas under conditions of time, temperature and atmosphere sufficient to reduce the carbon on the catalyst to about 0.25% by weight of less, while forming a gaseous combustion product comprising CO and/or CO_2; and

(f) recycling the regenerated catalyst to the reactor for contact with fresh converter feed.

4,374,020

CATALYTIC HYDROCONVERSION PROCESS WITH CATALYST RETAINER

Cesar A. Trevino, Baytown, and Richard G. Stellman, Seabrook, both of Tex., assignors to Shell Oil Company, Houston, Tex.

Continuation of Ser. No. 840,928, Oct. 11, 1977, abandoned, which is a division of Ser. No. 720,556, Sep. 7, 1976, abandoned. This application Mar. 29, 1979, Ser. No. 25,227

Int. Cl.³ C10G *45/08, 45/60, 47/10*

U.S. Cl. 208—216 R **6 Claims**

1. A catalytic process for the hydroconversion of mineral oil which comprises (a) first contacting a mineral oil feedstock and a hydrogen-containing gas in an upright reaction zone with a layer of spherical hydroconversion catalyst support and/or retainer which is larger than a conventional catalyst subsequently employed in the process and which consists essentially of alumina containing up to 6% by weight of silica as a support, and from about 2 to about 20% by weight of Group VI-B metal and about 0.5 to about 10% by weight Group VIII metal, each in the form of metals, their oxides or sulfides, and having a diameter of greater than 6 mm up to about 30 mm, a surface area above 200 m^2/gm and a crush strength above 70 pounds, at an elevated temperature of 100°-500° C., a total pressure of 5.0-10,000 psig, a liquid hourly space velocity from about 0.2 to about 12 and from about 300 to 10,000 cubic feet of added hydrogen per barrel of feed, said layer of spherical catalyst support and/or retainer being disposed above and below said conventionally employed catalyst bed having a depth sufficient to require inert pellets, balls or spheres as a retainer and/or support for said conventionally employed catayst; (b) then contacting said feed in said reaction zone with said conventional extruded smaller sized hydroconversion catalyst at the same operating conditions; (c) followed by contacting said feed with another layer of said spherical hydroconversion catalyst support and/or retainer as set out in step (a) and (d) recovering the hydroconverted oil from the reaction zone.

4,374,021

METHOD FOR CONTROLLING A PRETREATMENT PROCESS

David B. Bartholic, Watchung, N.J., assignor to Engelhard Minerals & Chemicals Corporation, Edison, N.J.

Filed Jan. 19, 1981, Ser. No. 225,927

Int. Cl.³ C10G *25/09, 25/12*

U.S. Cl. 208—251 R **30 Claims**

1. In a process for decarbonizing, demetallizing and/or desalting a hydrocarbon feed stock by:

contacting, in a selective vaporization step, for a short hydrocarbon residence time of less than 3 seconds at an elevated contact temperature, the feed stock with an inert

solid contact material in a confined rising vertical column to vaporize a major portion of the feed stock and to provide, as combustible deposits on the contact material, an unvaporized minor portion of the feed stock which includes high Conradson Carbon components and/or metal-containing components of the feed stock; separating the vaporized major portion of the feed stock from the contact material bearing the combustible deposits and quenching to arrest thermal cracking; contacting in a combustion step the contact material, bearing the combustible deposits, with an oxidizing gas to oxidize the combustible deposits and generate heat, whereby the contact material is heated by combustion of the combustible deposits; and recycling the so-heated contact material to contact further feed stock in the selective vaporization step, the improvement comprising:

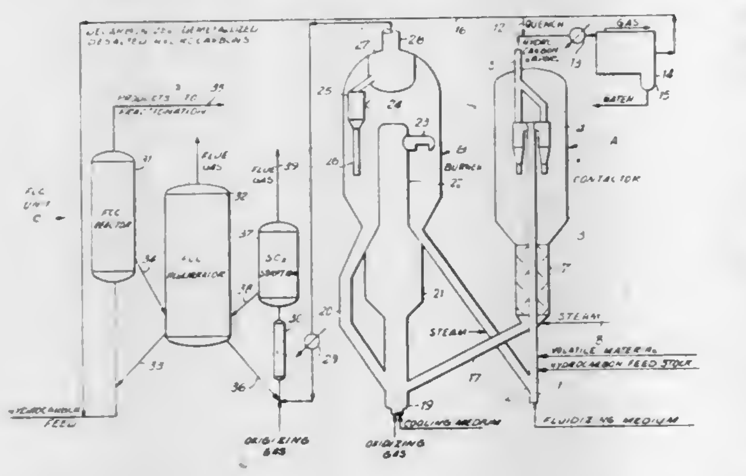

contacting the contact material in the combustion step with less than the stoichiometric amount of oxidizing gas, required to oxidize completely the combustible deposits, so that oxidizable high Conradson Carbon and/or metal-containing components of the combustible deposits are only partially oxidized to carbon monoxide and so that there is a reducing atmosphere in the combustion step.

4,374,022

CONSTANT PRESSURE SEPARATION OF NORMAL PARAFFINS FROM HYDROCARBON MIXTURES

Andrija Fuderer, Antwerp, Belgium, assignor to Union Carbide Corporation, Danbury, Conn.

Filed Sep. 30, 1980, Ser. No. 189,353

Int. Cl.³ C25G *25/03*

U.S. Cl. 208—310 Z **10 Claims**

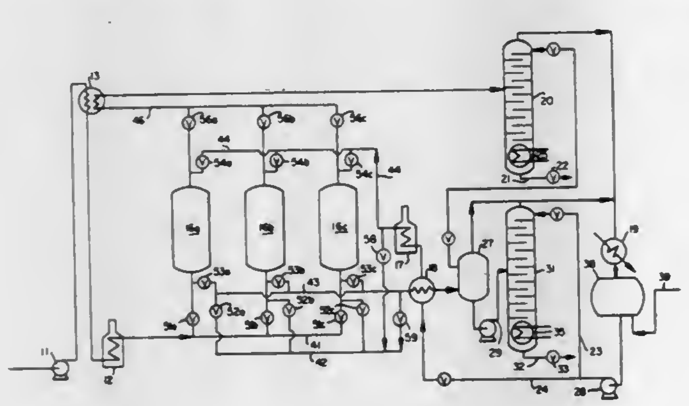

1. In an isobaric process for separating normal paraffins from non-normal hydrocarbons in a feed stream containing between 10 and 40 mol percent normal paraffins having 10 to 25 carbon atoms and non-normal hydrocarbons by (1) the selective adsorption of normal paraffins by passage of said feed stream through a molecular sieve adsorbent bed, (2) cocurrent purge with n-hexane to sweep out void space vapor containing a high concentration of non-normal hydrocarbons from the effluent end of the bed, (3) countercurrent purge with n-hexane to desorb normal paraffin adsorbate from the bed, (4) recovery of n-hexane from said separated normal paraffins and non-normal hydrocarbons, and (5) recycling of said n-hexane for purging of said bed, the improvement comprising diverting a portion of the desorption effluent from said countercurrent purge step as a source of said n-hexane used for cocurrent purge, the quantity of said countercurrent purge effluent diverted as cocurrent purge being that necessary to achieve a desired degree of separation of said normal paraffins and non-normal hydrocarbons and comprising from about 2.5 to about 5 bed volume voids, whereby the equipment size and energy consumption for the processing of said recycle n-hexane is reduced, without need to increase the adsorbent bed size to adsorb the additional normal paraffins introduced to the bed with the desorption effluent used as cocurrent purge gas.

4,374,023

PROCESS FOR RECOVERING HYDROCARBONS FROM A DIATOMITE-TYPE ORE

Bruce W. Davis, Fullerton, Calif., assignor to Chevron Research Company, San Francisco, Calif.

Filed Oct. 26, 1981, Ser. No. 315,317

Int. Cl.³ C10G *1/00*

U.S. Cl. 208—11 LE **21 Claims**

1. A process for recovering hydrocarbons from diatomite ore comprising:

(a) contacting a diatomite ore containing hydrocarbons with an effective amount of a C_4-C_{10} alcohol or mixture of alcohols;

(b) contacting the diatomite ore-alcohol mixture with an aqueous alkaline solution to separate the mixture into a hydrocarbon phase and an alkaline aqueous-diatomaceous ore fraction; and

(c) recovering the alcohol-hydrocarbon phase from step (b).

4,374,024

UNDERWATER SUCTION DEVICE FOR IRRADIATED MATERIALS

Arthur V. Peloquin, Danville, and Frank D. Qurnell, San Jose, both of Calif., assignors to General Electric Company, San Jose, Calif.

Filed Feb. 17, 1981, Ser. No. 234,957

Int. Cl.³ B01D *29/20*

U.S. Cl. 210—241 **2 Claims**

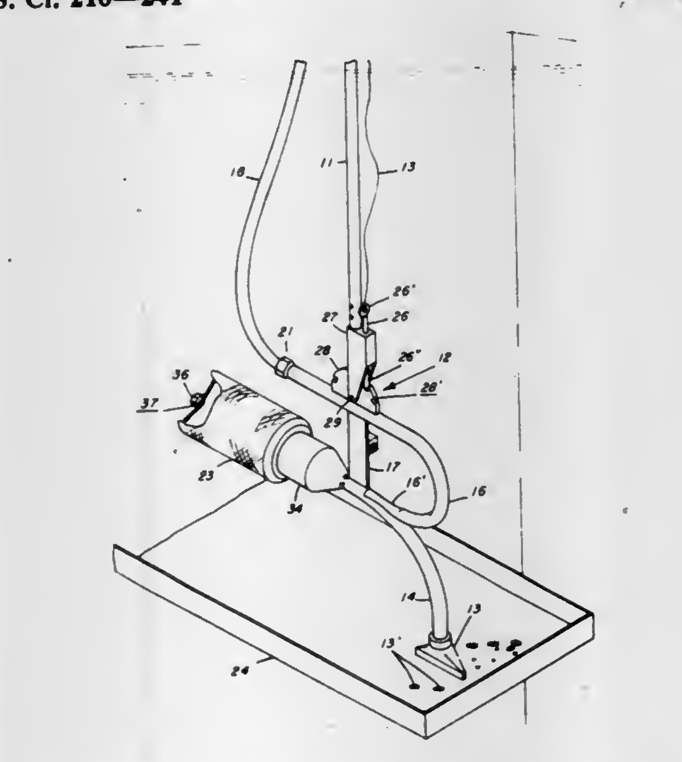

1. A remotely operated suction device for underwater collection of irradiated materials, comprising:

a source of pressurized water;

suction tube means for receiving irradiated materials;

filter means for capturing at least some of said irradiated materials, mounted on said suction tube means;

injection tube means for injecting water from said source of pressurized water into said suction tube means;

means for maneuvering said injection tube means in a pool of water;

means for pivotally coupling said means for maneuvering with said injection tube means, including means for latching said means for pivotally coupling in any one of a plurality of discrete positions within the range of motion of said means for pivotally coupling, said means for pivotally coupling including a curved portion defining a plurality of spaced detents and said means for latching including a plunger biased toward said curved portion, said plunger including a tip for cooperatively engaging a selected one of said plurality of spaced detents; and

means for remotely releasing said means for latching, whereby said injection tube means may be repositioned on said means for maneuvering and irradiated materials are remotely collected underwater.

4,374,025

WATER CONDITIONING REGENERATION CONTROL

Harvey L. Loke, 350 9th St. SW., Wells, Minn. 56097

Filed Dec. 24, 1981, Ser. No. 334,131

Int. Cl.³ C02B *1/22*

U.S. Cl. 210—140 **9 Claims**

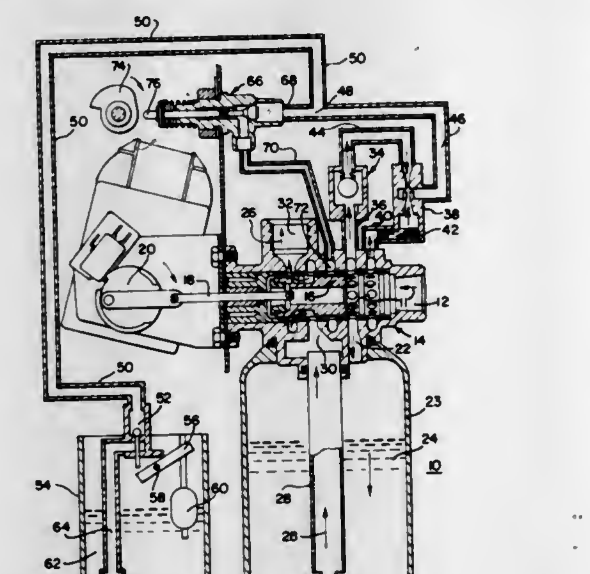

1. A water conditioning system including a water inlet for receiving water to be treated; a water outlet for emitting treated water; a treatment tank containing a supply of resinous material for conditioning of the water; a brine tank; a regeneration control mechanism in communication with said inlet, outlet, treatment tank and brine tank comprising control valve means which performs the steps of a regeneration cycle at selected time intervals; a brine valve disposed between said brine tank and said regeneration control mechanism; and an injector system associated with said regeneration control and disposed between said brine valve and said treatment tank including a fluid port in communication with said brine tank through said brine valve and in communication with said water inlet through said control valve, an injector having a first orifice in communication with said water inlet, a second orifice in communication with said treatment tank through said control valve, and an area between said orifices in communication with said fluid port, and a flow control valve disposed between said injector and said treatment tank operative such that when brine fluid is flowing from said brine tank to said treatment tank, the flow is substantially unrestricted, but when said flow from said brine tank ceases, the flow of water to said treatment tank is substantially restricted so as to prolong the interaction between said resin and said brine.

4,374,026

BASKET FILTER

Albert Greutert, Sachseln, Switzerland, assignor to Maxs AG, Switzerland

Filed Apr. 20, 1981, Ser. No. 255,204

Claims priority, application Fed. Rep. of Germany, Apr. 30, 1980, 3016729

Int. Cl.³ B01D *29/06*

U.S. Cl. 210—493.5 **10 Claims**

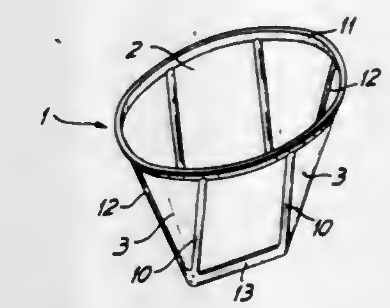

1. Basket filter made of perforated metal foil which is developable in one plane, with a form which merges from a round opening into a straight line bottom edge, comprising at least one rectangular metal foil part and at least two metal foil elements in the form of sectors of a circle, the rectangular metal foil part being folded at an angle in the middle of and transversely to its longitudinal edge to define the bottom edge, and the longitudinal edges of the rectangular metal foil part being connected to the straight line edges of the metal foil elements in the form of sectors of a circle.

4,374,027

PROCESS FOR THE SECONDARY TREATMENT OF WASTEWATER

David E. Severeid, Shelton, and Daryl D. Jech, Seattle, both of Wash., assignors to International Telephone and Telegraph Corporation, New York, N.Y.

Continuation-in-part of Ser. No. 875,327, Feb. 6, 1978, abandoned. This application Feb. 26, 1979, Ser. No. 14,853

Int. Cl.³ C02F *3/12*

U.S. Cl. 210—608 **9 Claims**

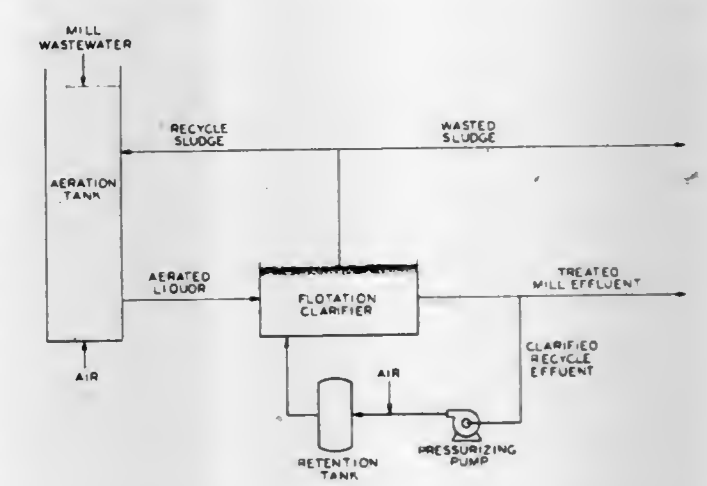

1. A process for the secondary treatment of wastewater by a modified air activated sludge system comprising

aerating wastewater containing bacteria, under conditions in which bacteria growth occurs, by continuously metering diffused air into a complete mix reactor until the BOD level of the wastewater is reduced by at least 90%, the food to microorganism ratio of the wastewater treatment system being greater than one,

introducing the aerated wastewater to a flotation cell to separate suspended solids including bacteria from the wastewater by dissolved air flotation clarification,

recycling said suspended solids and bacteria to said aeration

step in an amount sufficient to maintain said food to microorganism ratio and
removing and disposing of the remaining reduced BOD level wastewater.

4,374,028
PROCESS FOR WASTE WATER PURIFICATION
Mario Medina, Matthews, N.C., assignor to Harry Rosen, Longmeadow, Mass.
Filed Oct. 15, 1981, Ser. No. 311,547
Int. Cl.[3] C02F *1/24, 1/42*
U.S. Cl. 210—669 **2 Claims**

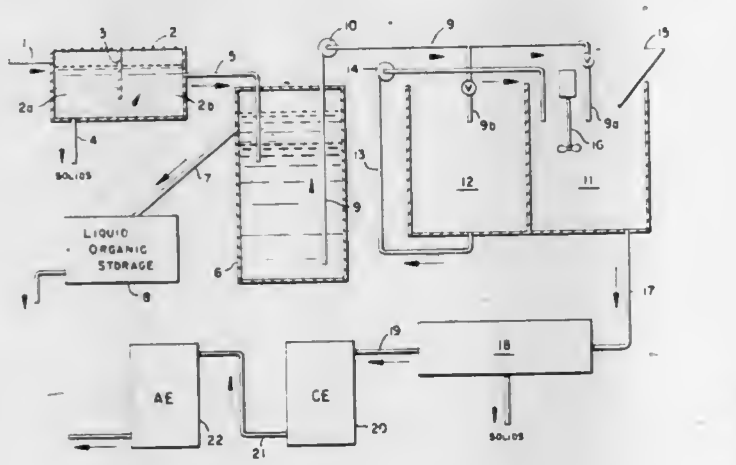

1. A process for the purification of an aqueous waste stream, particularly one of industrial origin, contaminated with organic and inorganic materials, which comprises:
(a) conducting an aqueous waste stream to a first sedimentation zone provided with baffle means which extends across said first sedimentation zone from above the surface of said waste stream to a short distance above the bottom of said first sedimentation zone, said baffle means dividing the zone into connected inlet and outlet sections wherein water-insoluble materials of densities higher than that of water are removed from the waste stream as the bottom from the inlet section of said zone;
(b) removing said waste stream from the upper portion of said sedimentation zone and introducing it to a flotation zone of relatively small diameter as compared to its height, wherein water-insoluble and water-immiscible liquid materials of densities lower than water are removed from said waste stream as the upper layer of said zone; said flotation zone comprising upper and lower sections separated by screen means, said aqueous waste stream from said sedimentation zone being introduced to said flotation zone below said screen means, said screen means preventing water-insoluble solid materials having a density lower than that of water from entering said upper layer:
(c) conducting said waste stream from said flotation zone to an adsorption zone wherein there is added to said aqueous waste stream finely divided activated carbon for adsorbing water-insoluble and water-immiscible materials, and the resulting slurry is subjected to agitation;
(d) passing said slurry through a solids separation zone wherein carbon particles having water-insoluble and water-immiscible materials adsorbed thereon and other solids suspended in said aqueous waste stream are separated from said waste stream; and
(e) conducting said aqueous waste stream to a cation exchange zone containing a cation exchange resin in the hydrogen form to remove metallic cations.

4,374,029
REGENERATIVE FILTER
Rajan A. Jaisinghani, Stoughton, Wis., assignor to Nelson Industries, Inc., Stoughton, Wis.
Filed May 4, 1981, Ser. No. 260,422
Int. Cl.[3] B01D *15/00, 23/16*
U.S. Cl. 210—671 **2 Claims**

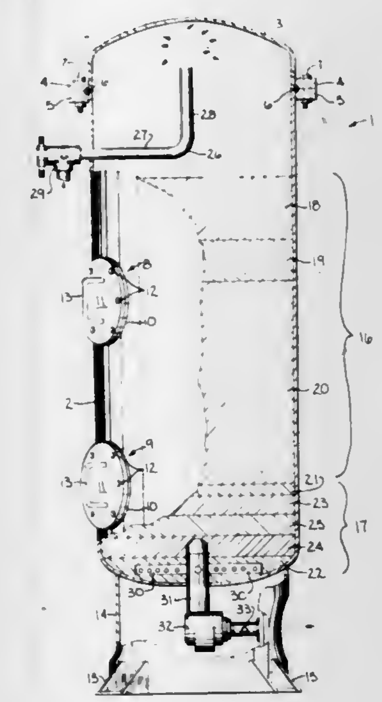

2. The method of separating oil from water comprising the steps of forming a multi-layer filter bed, said filter bed comprising a column of finely divided particles separated into at least three horizontal layers including a top layer, an intermediate layer and a bottom layer, said top layer being coprised of anthracite particles having an effective size of 0.75 to 0.85 mm and a maximum uniformity coefficient less than 2.0, said intermediate layer being composed of silica sand particles having an effective size of 0.4 to 0.55 mm and a maximum uniformity coefficient less than 1.5, said bottom layer being composed of garnet sand particles having an effective size of 0.25 to 0.35 mm, a maximum uniformity coefficient less than 1.8, and a depth of about 20 inches, the ratio of the depth of the top layer to that of the intermediate layer is about 2:3, the ratio of the depth of the intermediate layer to said bottom layer is about 1:5, said filter bed being supported within the column by a strata of relatively coarse support particles located beneath the bottom layer, flowing oil-contaminated water downwardly through the bed wherein the oil is adsorbed on the particles of the bed, regenerating the filter bed after a period of use by backwashing, said backwashing comprising the steps of introducing water under pressure into the lower end of the bed and flowing the water upwardly through said bed, and thereafter separately introducing air substantially free of water at a volume of 2 to 4 cfm/sq.ft. of filter bed into the lower end of the bed and flowing the air upwardly through said bed, and finally passing a second volume of water upwardly through said bed.

4,374,030
METHOD FOR SEPARATING A DISPERSED PHASE FROM A CONTINUOUS PHASE
Grover C. Franklin, Jr., 2250 Warmouth St., San Pedro, Calif. 90732
Continuation-in-part of Ser. No. 225,328, Jan. 15, 1981, Pat. No. 4,336,114, which is a division of Ser. No. 18,054, Mar. 6, 1979, Pat. No. 4,272,461. This application Nov. 5, 1981, Ser. No. 318,446
Int. Cl.[3] B01F *3/04*
U.S. Cl. 210—758 **4 Claims**

1. A process for separating a clear liquid from a slurry comprising a continuous phase and a dispersed phase comprising immersing vertically in the slurry an apparatus comprising
(a) an inner cylindrical member comprising an elongated tube having upper and lower ends and a plurality of turbines, which are free to rotate about the longitudinal axis thereof mounted within the tube, the turbines being spaced apart from one another and so constructed that adjacent turbines have different rotational direction or velocity, the tube having a solid, unperforated wall;
(b) an outer cylindrical member comprising an elongated tube having upper and lower ends and a plurality of openings in the lower half of the tube wall, the outer and inner cylindrical members being arranged in a concentric manner;

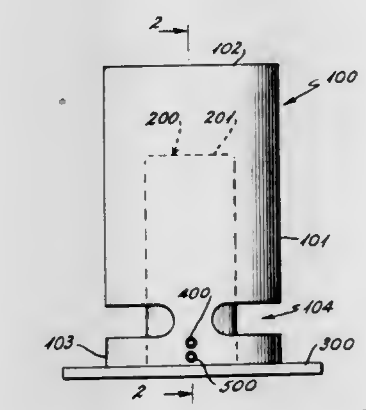

(c) a base member, to one surface of which the lower ends of the inner and outer cylindrical members are attached so that the lower ends are completely sealed;
(d) a gas inlet pipe for introducing gas bubbles into the lower end of at least one of the cylindrical members; and
(e) a conduit means for removing the continuous phase from the bottom of the inner cylindrical member, pumping a gas into the apparatus through the gas inlet pipe, circulating the slurry through the apparatus, and removing the clear liquid collected within the inner cylindrical member and at the bottom thereof.

4,374,031
METHOD FOR MANUFACTURING POLYESTER FIBERS WITH GOOD ADHESION TO RUBBER
Kazushige Kudo, Joyo; Shigeo Yamamoto, and Shigemitsu Murase, both of Uji, all of Japan, assignors to Unitika Limited, Osaka, Japan
Filed May 29, 1981, Ser. No. 268,310
Claims priority, application Japan, Jun. 6, 1980, 55-76944
Int. Cl.[3] D06M *15/12, 15/36*
U.S. Cl. 252—8.8 **13 Claims**

1. A spin finish for polyester fibers to improve adhesion to rubber comprising a lubricating agent and surfactant and
(a) from about 5 to about 40 percent by weight of the finish of an epoxy compound,
(b) from about 3 to about 30 percent by weight of the finish of a blocked isocyanate compound, and
(c) from about 2 to about 30 percent by weight of the finish of a polyoxyalkylene amine compound obtained by reacting 3 to 20 mols of an alkylene oxide selected from the group consisting of ethylene oxide, propylene oxide and butylene oxide with an organic amine containing >NH or —NH_2 groups.

4,374,032
LUBRICANT COMPOSITION CONTAINING BORATED OXAZOLINE FRICTION REDUCER
Robert M. Gemmill, Pitman, and Andrew G. Horodysky, Cherry Hill, both of N.J., assignors to Mobil Oil Corporation, New York, N.Y.
Filed Mar. 28, 1980, Ser. No. 134,849
Int. Cl.[3] C10M *1/54*
U.S. Cl. 252—49.6 **7 Claims**

1. A lubricant composition comprising a major proporation of an oil of lubricating viscosity or a grease therefrom and a friction-reducing amount of the compound prepared by reacting tris(hydroxymethyl)aminomethane with a carboxylic acid of the formula:

R—COOH

wherein R is a C_9 to C_{49} hydrocarbyl group, the reaction being carried out at from about 80° C. to about 250° C., the final temperature being sufficiently high to form an intermediate of the formula:

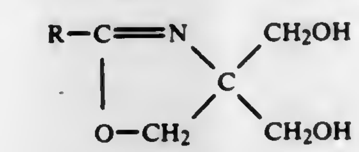

followed by reacting said intermediate, at from about 50° C. to about 300° C., with a boron-containing compound selected from the group consisting of boric acid and a borate of the formula:

$(R'O)_xB(OH)_y$

wherein R' is a C_1 to C_6 alkyl, x is 1 to 3 and y is 0 to 2.

7. A method of reducing fuel consumption in an internal combustion engine comprising lubricating said engine with a lubricating oil composition comprising a major proportion of a lubricating oil and a fuel consumption reducing amount of the compound prepared by reacting tris(hydroxymethyl)aminomethane with a carboxylic acid of the formula:

R—COOH

wherein R is a C_9 to C_{49} hydrocarbyl group, the reaction being carried out at from about 80° C. to about 250° C., the final temperature being sufficiently high to form an intermediate of the formula:

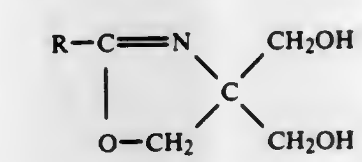

followed by reacting said intermediate, at from about 50° C. to about 300° C., with a boron-containing compound selected from the group consisting of boric acid and a borate of the formula:

$(R'O)_xB(OH)_y$

wherein R' is a C_1 to C_6 alkyl, x is 1 to 3 and y is 0 to 2.

4,374,033
DISPERSANT AND LUBRICATING OIL CONTAINING THE DISPERSANT
Robert E. Malec, Ladue, Mo., assignor to Edwin Cooper, Inc., St. Louis, Mo.
Filed Jun. 18, 1981, Ser. No. 274,827
Int. Cl.[3] C10M *1/20, 1/32, 1/54*
U.S. Cl. 252—49.6 **16 Claims**

1. A dispersant suitable for use in lubricating oil made by a process comprising reacting at 100°-300° C.
(a) an amino pyrrolidone intermediate made by reacting about 0.5-2.5 moles of butyrolactone with about 1 mole of an ethylene polyamine, at 100°-300° C.
(b) about 1-3 moles of an aliphatic hydrocarbon-substituted succinic anhydride, acid or lower alkyl ester thereof wherein said hydrocarbon substituent has a molecular weight of about 700-100,000, and
(c) a boronating agent in an amount sufficient to impart

about 0.01-1.5 weight percent boron into the final product.

4,374,034
POLYMERIC COMPOSITIONS, METHOD FOR THEIR PREPARATION, AND LUBRICANTS CONTAINING THEM

Lester E. Coleman, Willoughby Hills, Ohio, assignor to The Lubrizol Corporation, Wickliffe, Ohio

Continuation of Ser. No. 8,736, Feb. 2, 1979, abandoned, which is a continuation-in-part of Ser. No. 433,322, Jan. 14, 1974, Pat. No. 4,194,985. This application Apr. 16, 1980, Ser. No. 140,945
Int. Cl.[3] C10M *1/32*
U.S. Cl. 252—51.5 A **9 Claims**

1. A method for preparing a composition of matter which comprises polymerizing, under free radical polymerization conditions and at a temperature of about 30°-90° C.:

(A) At least one ethylenically unsaturated monomer having from 3 to about 10 carbon atoms and a terminal olefinic bond and selected from the group consisting of unsaturated monohydric and polyhydric alcohols and carboxylic acid esters thereof, esters of unsaturated carboxylic acids and saturated alcohols, vinyl cyclic compounds, unsaturated ethers, unsaturated ketones, amides of unsaturated carboxylic acids, unsaturated aliphatic hydrocarbons, alkenyl halides and unsaturated nitriles; in the presence of

(B) At least one oil-soluble dispersant which is nonpolymerized and incapable of addition polymerization and which is characterized by the presence within its molecular structure of a substantially saturated oil-solubilizing group containing at least about 30 aliphatic carbon atoms and a polar group bonded to said oil-solubilizing group;

with the proviso that said dispersant B is not the reaction product of a substantially saturated hydrocarbon-substituted or halohydrocarbon-substituted succinic acid or anhydride with an alcohol;

the amount of said dispersant B being sufficient to produce a stable solution or dispersion of the resulting polymer in a substantially inert diluent.

7. A composition prepared by the method of any of claims 1-6.

9. A lubricating composition comprising a major amount of a lubricating oil and a minor amount, sufficient to improve dispersancy, extreme pressure properties or viscosity, of a composition according to claim 7.

4,374,035
ACCELERATED RELEASE LAUNDRY BLEACH PRODUCT

Frank P. Bossu, West Chester, Ohio, assignor to The Procter & Gamble Company, Cincinnati, Ohio

Filed Jul. 13, 1981, Ser. No. 282,483
Int. Cl.[3] C11D *17/00*
U.S. Cl. 252—91 **11 Claims**

1. A dry, granular laundry bleach product in a pouch comprising:

I. a peroxyacid bleach selected from the group consisting of the hydrotropic or hydrophilic peroxyacid bleaches,

II. a surfactant at level of at least about 10% by weight of the peroxyacid bleach, said surfactant selected from the group consisting of peroxyacid compatible synthetic detergents and fatty acid soaps, and,

III. a water-soluble, peroxyacid compatible acid additive, said acid having a pK_a of from about 2 to about 7, said pouch consisting of a water-insoluble but water-permeable fibrous material; whereby said acid additive accelerates the

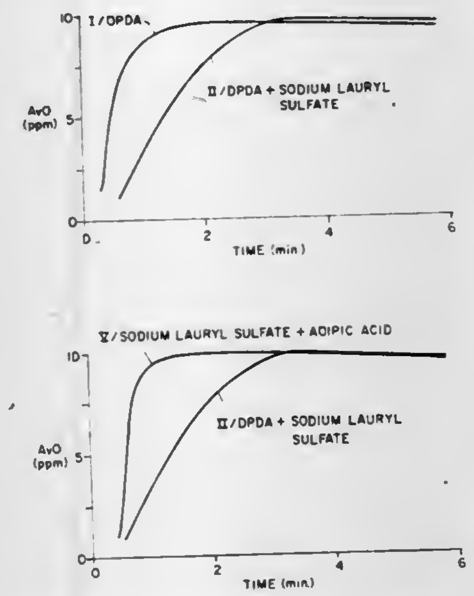

release of said bleach from the pouch into laundry wash liquor in the presence of said surfactant.

4,374,036
COMPOSITION AND CONCENTRATE USEFUL FOR MAKING A FOUNTAIN SOLUTION FOR LITHOGRAPHIC PRINTING OPERATIONS

Ralph D. Canale, Long Island City; Albert S. Canale, Massapequa, and Harry Papazian, Long Island City, all of N.Y., assignors to Michael A. Canale, Long Island City, N.Y., by said Harry Papazian

Continuation-in-part of Ser. No. 140,689, Apr. 16, 1980, Pat. No. 4,340,509. This application Nov. 19, 1980, Ser. No. 208,253
Int. Cl.[3] B41L *25/00;* **B41M** *1/06;* **C11D** *3/075, 3/43*
U.S. Cl. 252—135 **18 Claims**

1. A composition suitable for production of a substantially neutral fountain solution, which consists essentially of 15 to 40% by weight tetrapotassium pyrophosphate; 15 to 40% by weight monosodium phosphate; 1 to 15% by weight of a sequestrant; 0.5 to 6% by weight of a water-soluble polyethylene glycol; 0.5 to 4% by weight sodium carboxymethyl cellulose; 2 to 6% by weight of a low- or non-foaming nonionic detergent; 0.5 to 5% by weight of an anionic detergent which is selected from the group consisting of alkyl orthophosphates and salts thereof, alkyl polyphosphates and salts thereof, and mixtures of the foregoing; and 0.15 to 2.7% of a polysiloxane.

4,374,037
METHOD FOR PREPARING DIVALENT-EUROPIUM-ACTIVATED CALCIUM SULFIDE PHOSPHORS

Tatsuo Takahashi, Isehara, Japan, assignor to RCA Corporation, New York, N.Y.

Filed Jun. 23, 1982, Ser. No. 391,417
Int. Cl.[3] C09K *11/12, 11/14, 11/46*
U.S. Cl. 252—301.4 S **8 Claims**

1. A method for preparing a divalent-europium-activated calcium sulfide phosphor comprising reacting a molten mixture consisting essentially of calcium chloride and europium chloride with gaseous carbon disulfide at temperatures between 850° and 1200° C. for 1 to 6 hours.

4,374,038
METHOD PRODUCING STEAM-LIKE FUMES FOR TOY ENGINE

Muneo Tamura, 195-1, 8-414, Junocho 2-Chome, Omiya-Shi, Saitama 330, Japan

PCT No. PCT/JP80/00095, § 371 Date Jan. 11, 1981, § 102(e) Date Jan. 11, 1981, PCT Pub. No. WO80/02514, PCT Pub. Date Nov. 27, 1980
PCT Filed May 7, 1980, Ser. No. 232,022
Int. Cl.[3] C09K *3/30;* **A63H** *19/14*
U.S. Cl. 252—305 **1 Claim**

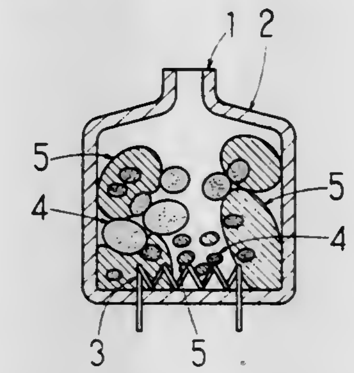

1. In a method for producing fumes appearing like steam for the chimney of a toy steam engine, the method comprising the steps of depositing water and oil having a non-affinity with the water in a container having an open end and an electrically conductive wire exposed to contact with said water and oil located adjacent the lowest part of the container, and passing current through said wire to raise the temperature of the oil and water sufficiently to cause the oil to burn and the water to evaporate.

4,374,039
ANTICLUMPING PRODUCTS AND TREATMENTS BASED ON AMIN SALTS

Joseph Schapira, Paris; Jacques Ruel, Saint Gratien; Jean C. Cheminaud, Chatou; Robert Sadlo, Gennevilliers, and Robert Christian, Pantin, all of France, assignors to Compagnie Francaise de Produits Industriels, Gennevilliers, France

Filed Jul. 11, 1980, Ser. No. 168,644
Claims priority, application France, Jul. 13, 1979, 79 18295
Int. Cl.[3] C05G *3/00;* **C09K** *3/00*
U.S. Cl. 252—384 **30 Claims**

1. Anti-clumping products for salts, simple or complex fertilizers, said products comprising, as active substance an effective amount of at least one organic solvent-soluble salt of an alkanolamine, an alkylamine, a cycloalkylamine or an aromatic amine, having from 2 to 22 carbon atoms, with an alkyl naphtylene sulfonic acid whose alkylaryl radical includes from 11 to 32 carbon atoms.

4,374,040
AMINOALKYLENEPHOSPHONIC ACIDS AND SALTS THEREOF AND THEIR USE IN AQUEOUS SYSTEMS

Joseph G. E. Fenyes, Germantown, and John D. Pera, Memphis, both of Tenn., assignors to Buckman Laboratories, Inc., Memphis, Tenn.

Division of Ser. No. 63,275, Aug. 2, 1979, which is a division of Ser. No. 914,250, Jun. 9, 1978, Pat. No. 4,181,806. This application Aug. 19, 1980, Ser. No. 179,619
Int. Cl.[3] C23F *11/16*
U.S. Cl. 252—389 A **17 Claims**

1. A process for inhibiting the corrosion of metal surfaces in contact with an aqueous system which comprises adding to said system an aminoalkylenephosphonic acid or an alkali metal salt thereof in an amount sufficient to inhibit the corrosion of the metal surfaces having the formula:

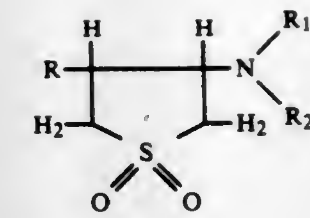

wherein R is hydrogen or

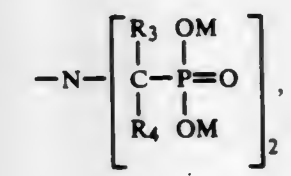

R_1 is hydrogen or

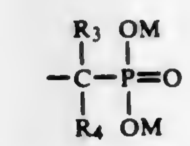

R_2 is an alkyl group containing 1 to 4 carbon atoms, 2-hydroxyethyl, 2-hydroxypropyl, 3-chloro-2-hydroxypropyl,

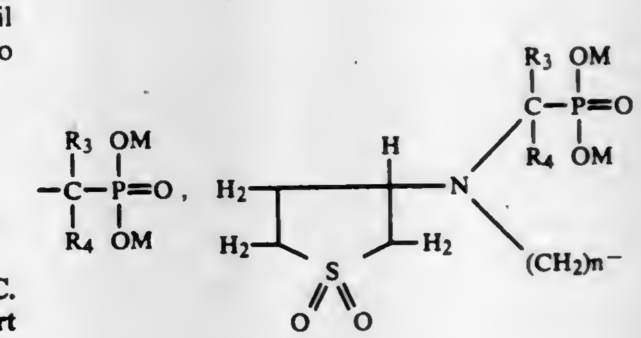

or

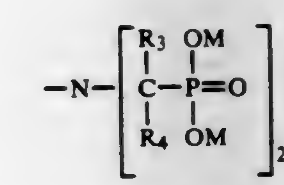

R_3 and R_4 may be the same or different and are selected from the group consisting of hydrogen and an alkyl group containing 1 to 4 carbon atoms; n is 1 or 2; M is hydrogen or an alkali metal; with the proviso that when R is

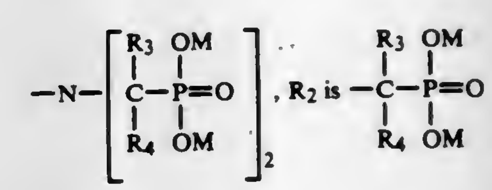

and with the further proviso that R_1 is hydrogen only when R_2 is

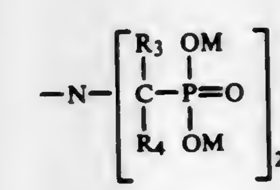

4,374,041
TESTING REAGENT

Wayne R. Matson, Ayer, Mass., assignor to Environmental Sciences Associates, Inc., Bedford, Mass.
Division of Ser. No. 666,664, Mar. 15, 1976, which is a continuation of Ser. No. 505,149, Sep. 11, 1974, abandoned, which is a division of Ser. No. 447,376, Mar. 1, 1974, abandoned. This application Apr. 24, 1978, Ser. No. 899,389
Int. Cl.[3] C09K *3/00*
U.S. Cl. 436—60 **12 Claims**

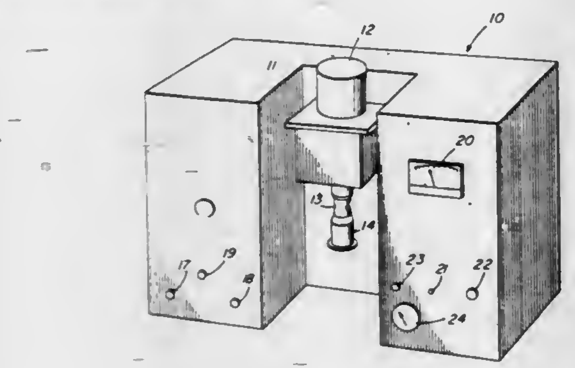

5. A composition for treating a human blood sample preparatory to electrochemically detecting and measuring the lead content of said sample, said composition comprising:
an electrolytic solution containing a dissovled chromic compound and a dissolved calcium compound, the chromic and calcium ions together being present in concentration of about 0.12 F, dissolved mercuric chloride in a concentration of about 0.000225 F, hydrazine in a concentration of about 0.019 F, phosphoris acid in a concentration of about 0.01 F, a dispersing agent, and a source of hydrogen ions to bring said composition to pH about 1.

4,374,042
METHOD OF REACTIVATING A CATALYTIC COMPOSITE OF A CARRIER MATERIAL AND A MERCAPTAN OXIDATION CATALYST

Robert R. Frame, Glenview, Ill., assignor to UOP Inc., Des Plaines, Ill.
Continuation-in-part of Ser. No. 170,372, Jul. 21, 1980, Pat. No. 4,308,169, which is a continuation-in-part of Ser. No. 973,303, Dec. 26, 1978, Pat. No. 4,213,877. This application Apr. 24, 1981, Ser. No. 257,041
The portion of the term of this patent subsequent to Dec. 29, 1998, has been disclaimed.
Int. Cl.[3] B01J *31/40;* **C10G** *19/02, 19/08, 29/00*
U.S. Cl. 252—412 **13 Claims**

1. A method of reactivating a deactivated mercaptan oxidation catalytic composite comprising a carrier material and a metal chelate, said method comprising contacting said composite at a temperature of between about 55° C. and about 175° C. with an aqueous solution of a quaternary ammonium compound and a saturated linear ionic compound having from about 9 to about 24 carbon atoms.

3. The method of claim 1 wherein said quaternary ammonium compound is represented by the structural formula:

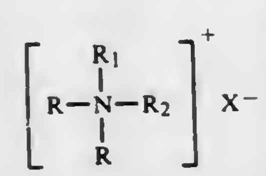

wherein R is a hydrocarbon radical containing up to about 20 carbon atoms and selected from the group consisting of alkyl, cycloalkyl, aryl, alkaryl, and aralkyl, R_1 is a substantially straight chain alkyl radical containing from about 5 to about 20 carbon atoms, R_2 is selected from the group consisting of aryl, aralkyl and alkaryl, and X is an anion.

7. The method of claim 1 wherein said linear ionic compound possesses an anionic portion wherein said anionic portion is selected from the group consisting of sulfonate, sulfate and carboxylate.

4,374,043
PREPARATION OF FLUIDIZABLE VANADIUM PHOSPHORUS OXIDE CATALYSTS USING A MIXED PHOSPHORUS SOURCE

Patricia R. Blum, Macedonia, and Mark L. Nicholas, Cleveland, both of Ohio, assignors to The Standard Oil Company, Cleveland, Ohio
Division of Ser. No. 220,624, Dec. 29, 1980, Pat. No. 4,317,778. This application Sep. 24, 1981, Ser. No. 305,066
Int. Cl.[3] B01J *27/14*
U.S. Cl. 252—435 **18 Claims**

1. A process for the preparation of a fluid bed oxidation catalyst containing the mixed oxides of vanadium and phosphorus comprising
(a) introducing at least one pentavalent vanadium compound into an organic liquid capable of reducing at least a portion of the vanadium to a valence state of +4;
(b) effecting reduction of at least a portion of the vanadium to a valence state of +4;
(c) contacting the vanadium with a mixed phosphorus component prior or subsequent to effecting said reduction, wherein said mixed phosphorus component comprises about 75–90 weight percent orthophosphoric acid and about 10–25 weight percent pyrophosphoric acid;
(d) comminuting the catalyst precursor resulting from steps (a) through (c);
(e) introducing the catalyst precursor into water prior or subsequent to said comminuting to form an aqueous slurry; and
(f) spray drying said slurry to form microspheroidal catalyst particles.

4,374,044
CORDIERITE BEAD CATALYST SUPPORT AND METHOD OF PREPARATION

Carl F. Schaefer, Flint, and Raymond E. Bedford, Burton, both of Mich., assignors to General Motors Corporation, Detroit, Mich.
Filed Jan. 19, 1981, Ser. No. 226,162
Int. Cl.[3] B01J *21/16, 20/30, 35/08*
U.S. Cl. 252—455 R **6 Claims**

1. A thermally stable cordierite bead catalyst support having a high geometric surface area, high macro-porosity, and good crush strength, and having a dimpled or raspberry-like surface, said cordierite bead resulting from the disc pelletizing of a dry homogeneous mixture of talc, clay, alumina or its precursor powder and a combustible organic filler, together with a separate spray stream of water or of aqueous colloidal silica, the resulting beads being dried and fired to burn-out the organic filler and to form cordierite, said clay and the feed rate of said streams being such as to produce a plasticity of the materials when mixed on the rotating disc of the pelletizer sufficient to form small beads which agglomerate.

6. A process for preparing a cordierite bead catalyst support having a dimpled or raspberry-like surface with a high geometric surface area, which comprises dry mixing to form a substantially homogeneous material batch, about 32% talc, about 27% ball clay, about 26% alumina trihydrate and about 15% cellulose fiber, all by weight, feeding a stream of said dry material onto a rotating pelletizer disc, feeding a separate stream of colloidal silica onto said disc, the feed rates of the dry materials and of colloidal silica being such as to produce a dimpled or raspberry-like surfaced bead having about 28% by weight liquid and having sufficient silica to produce a bead which on firing contains cordierite as the principal phase, drying the resulting beads to remove free water, and firing the beads to burn-out said cellulose and cause the batch material to react to form a cordierite body having high strength and high macroporosity.

4,374,045
GROUP IB METAL MODIFIED ZEOLITE CATALYSTS

Chin-Chiun Chu, North Brunswick, N.J., assignor to Mobil Oil Corporation, New York, N.Y.
Continuation-in-part of Ser. No. 153,364, May 27, 1980, Pat. No. 4,276,438. This application Apr. 24, 1981, Ser. No. 257,060
Int. Cl.[3] B01J *29/30*
U.S. Cl. 252—455 Z **11 Claims**

1. A catalyst composition suitable for para-selective conversion of substituted aromatic compounds, said composition comprising:
a crystalline zeolite material characterized by a constraint index of within the approximate range of 1 to 12 and a silica to alumina mole ratio of at least 12;
said zeolite further comprising at least 0.25 weight percent of one or more Group IB metals incorporated into said zeolite in the form of a Group IB metal oxide and at least 0.25 weight percent of phosphorus incorporated into said zeolite in the form of an oxide of phosphorus.

4,374,046
HYDROCARBON DEHYDROGENATION METHOD AND NONACIDIC MULTIMETALLIC CATALYTIC COMPOSITE FOR USE THEREIN

George J. Antos, Bartlett, Ill., assignor to UOP Inc., Des Plaines, Ill.
Continuation-in-part of Ser. No. 46,884, Jun. 8, 1979, Pat. No. 4,238,365, which is a division of Ser. No. 884,310, Mar. 7, 1978, Pat. No. 4,190,521. This application Nov. 17, 1980, Ser. No. 207,852
The portion of the term of this patent subsequent to Dec. 9, 1997, has been disclaimed.
Int. Cl.[3] B01J *23/60*
U.S. Cl. 252—466 B **9 Claims**

1. A nonacidic catalytic composite comprising a porous carrier material containing, on an elemental basis, about 0.01 to about 2 wt. % platinum group metal, about 0.05 to about 5 wt. % nickel, about 0.1 to about 5 wt. % alkali metal or alkaline earth metal, and about 0.01 to about 5 wt. % zinc; wherein the platinum group, catalytically available nickel, zinc and alkali or alkaline earth components are uniformly dispersed throughout the porous carrier material; wherein substantially all of the platinum group component is present in the elemental metallic state; wherein substantially all of the catalytically available nickel component is present in the elemental metallic state or in a state which is reducible to the elemental metallic state under hydrocarbon dehydrogenation conditions or in a mixture of these states; and wherein substantially all of the alkali or alkaline earth component is present in a positive oxidation state.

4,374,047
PROCESS FOR APPLICATION OF A CATALYTICALLY ACTIVE COATING CONTAINING PLATINUM, PALLADIUM OR RHODIUM OR THEIR MIXTURES TO A CARRIER AND PRODUCT MADE BY SAID PROCESS

Alfred Bozon, Erlensee; Eduard Lakatos, Linsengericht; Edgar Koberstein, Alzenau; Hans-Dieter Pletka, Freigericht, and Herbert Völker, Hanau, all of Fed. Rep. of Germany, assignors to Degussa Aktiengesellschaft, Frankfurt, Fed. Rep. of Germany
Filed Feb. 10, 1981, Ser. No. 233,252
Claims priority, application Fed. Rep. of Germany, Feb. 21, 1980, 3006398
Int. Cl.[3] B01J *23/42, 23/44, 23/46*
U.S. Cl. 252—472 **5 Claims**

1. In a process for application of a coating or film to the surface of a porous catalyst carrier, said coating or film formed from an aqueous solution comprising as the essential catalytic elements necessary to effect catalytic conversion of the harmful components in the exhaust stream of an automotive engine, a member consisting of platinum, palladium, or rhodium and mixtures thereof as the catalytic active material of an exhaust purification catalyst by means of an aqueous solution of these metals to the surface of a porous catalyst carrier by a first step of filling the pores of the carrier with a preloading step, then impregnating with said aqueous solution of essential catalytic element and heating the impregnated carrier to thereby remove the liquid phase of the solution containing the catalytically active material employed in said impregnation; wherein the preloading is carried out with a liquid which is an aqueous solution containing at most 1% ammonium chloride.

4,374,048
ELECTRICALLY CONDUCTIVE POLYMERIC COMPOSITIONS

Oh-Kil Kim, Burke, Va., and Robert B. Fox, Bethesda, Md., assignors to The United States of America as represented by the Secretary of the Navy, Washington, D.C.
Filed Aug. 7, 1981, Ser. No. 291,001
Int. Cl.[3] H01B *1/06*
U.S. Cl. 252—500 **26 Claims**

1. A cured electrically conductive polymeric composition consisting essentially of a poly(vinylacetal) polymer represented by the general formula:

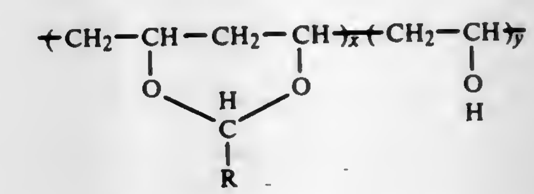

wherein R is a radical of the base of an electron-rich donor aldehyde having an ionization potential from about 7 to about 10 eV, the ratio of x to y is from about 9:1 to about 1:9, and an amount up to about 50 weight percent of microcrystals of a salt represented by the formula:

$$X^{M+}[TCNQ\ \ ]_m\ \ [TCNQ^{\cdot}]_n$$

wherein x is a metal or a cation radical, said metal being selected from the group consisting of lithium, sodium, potassium, beryllium, magnesium, calcium, strontium, manganese, copper, silver and tin, and said cation radical being selected from the class consisting of ammonium, trialkyl-ammonium, N-alkylquinolium radicals with alkyl groups from 1 to 4 carbon atoms, m is 1 or 2, and n is 0 or 1.

4,374,049
ZINC OXIDE VARISTOR COMPOSITION NOT CONTAINING SILICA

Howard F. Ellis, Stephentown, N.Y., and Herbert Fishman, Pittsfield, Mass., assignors to General Electric Company
Filed Jun. 6, 1980, Ser. No. 157,097
Int. Cl.[3] H01B *1/06*
U.S. Cl. 252—519 **4 Claims**

1. A zinc oxide varistor composition free of the oxides of silicon and barium, comprising:
ZnO as a major constituent;
equimolar concentrations of about 0.5 mole percent of each of the oxides of Bi, Co, Mn, and Sn; and
about 2.0 mole percent of the oxide of Sb, about 1.0 mole percent of the oxide of Ni, and about 0.01 to about 0.10 mole percent of the oxide of B wherein the quantity of Ni is less than Sb and greater than B.

4,374,050
INERT ELECTRODE COMPOSITIONS
Siba P. Ray, Plum Boro, Pa., assignor to Aluminum Company of America, Pittsburgh, Pa.
Filed Nov. 10, 1980, Ser. No. 205,651
Int. Cl.³ H01B *1/06*
U.S. Cl. 252—519 **35 Claims**

1. A metal composition suitable for use as an inert electrode in the electrolytic production of metal from a metal compound dissolved in a molten salt, the composition defined by the formula:

$$\left\{\sum_{i=1}^{m}(M_i)F_{Mi}\right\}\left\{\sum_{j=1}^{p}(M_j)F'_{Mj}\sum_{i=1}^{m}(M_i)F'_{Mi}\right\}_Z\left(\sum_{r=1}^{n}X_rF_{xr}\right)_K$$

where $\sum_{i=1}^{m}F_{Mi}=1$; $\sum_{j=1}^{p}F_{Mj}+\sum_{i=1}^{m}F_{Mi}=1$ and

$$\sum_{r=1}^{n}X_rF_{xr}=1;$$

z is a number in the range of 1.0 to 2.2; K is a number in the range of 2.0 to 4.4; M_i is a metal having a valence of 1, 2, 3, 4 or 5 and is the same metal or metals wherever M_i is used in the formula; M_j is a metal having a valence of 2, 3 or 4; M_i and M_j being different metals; X_r is at least one of the elements from the group consisting of O, F, N, S, C and B; m, p and n are the number of components which comprise M_i, M_j and X_r; F_{Mi}, F'_{Mj}, F'_{Mi} or F_{xr} are the mole fractions of M_i, M_j and X_r and $0<\Sigma F'_{Mi}<1$ when m>1.

4,374,051
UTILIZATION OF NITROGEN CONTAINING HETEROCYCLIC DERIVATIVES AS PERFUME INGREDIENTS
Regula Näf, Geneva; Wilhelm Pickenhagen, Chavannes-des-Bois, and Anthony F. Morris, Gingins, all of Switzerland, assignors to Firmenich SA, Geneva, Switzerland
Filed Jan. 26, 1981, Ser. No. 228,357
Claims priority, application Switzerland, Feb. 6, 1980, 934/80
Int. Cl.³ A61K *7/46*
U.S. Cl. 252—522 R **3 Claims**

1. A method for improving, enhancing or modifying the odorous properties of perfumes, perfume bases or perfumed articles which comprises the step of adding thereto at least one of the pyridine derivatives selected from the group consisting of:

a. 2-isopropenyl-pyridine,
b. 3-isopropenyl-pyridine,
c. 2-isopropyl-5-methyl-pyridine,
d. 2-methyl-5-isopropenyl-pyridine,
e. 2-isopropyl-5-acetyl-pyridine,
f. 2-methyl-5-acetyl-pyridine, and
g. 2-methyl-5-isopropyl-pyridine,

wherein the concentration of the pyridine derivative is between about 10 to about 100 ppm of the total weight of the perfume, perfume base or perfumed article composition.

4,374,052
PERFUME COMPOSITION
Yoshiaki Fujikura, Tochigi; Yoshiaki Inamoto; Naotake Takaishi, both of Utsunomiya, and Motoki Nakajima, Saitama, all of Japan, assignors to Kao Corporation, Tokyo, Japan
Filed Mar. 9, 1981, Ser. No. 241,855
Claims priority, application Japan, Mar. 14, 1980, 55-32435; Dec. 10, 1980, 55-174247
Int. Cl.³ A61K *7/46*
U.S. Cl. 252—522 R **4 Claims**

1. A perfume composition comprising:
the compound methyl tricyclo[5.2.1.0^{2,6}]decane-2-carboxylate of the formula (I):

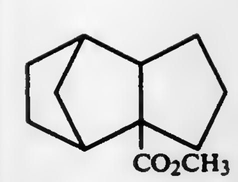

(I)

in an amount sufficient to afford a herbal note or essence to the composition; and an acceptable carrier therefor.

4,374,053
UNSATURATED ALDEHYDES, ORGANOLEPTIC USES THEREOF AND PROCESS FOR PREPARING SAME
Philip T. Klemarczyk, Old Bridge; Robert P. Belko, Woodbridge, and Richard M. Boden, Monmouth Beach, all of N.J., assignors to International Flavors & Fragrances Inc., New York, N.Y.
Filed Sep. 17, 1981, Ser. No. 303,011
Int. Cl.³ A61K *7/46*
U.S. Cl. 252—522 R **3 Claims**

1. A process for augmenting or enhancing the aroma of a perfume or cologne comprising the step of adding to a perfume or cologne base, an aroma augmenting or enhancing quantity of at least one compound defined according to the generic structure:

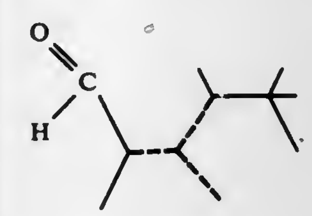

wherein one of the dashed lines represents a carbon-carbon double bond and each of the other of the dashed lines represent carbon-carbon single bonds.

4,374,054
USE IN PERFUMERY OF CARBOALKOXY ALKYL NORBORNANES
Philip T. Klemarczyk, Old Bridge; James M. Sanders, Eatontown; Manfred H. Vock, Locust; Joaquin F. Vinals, Red Bank; Frederick L. Schmitt, Holmdel, and Edward J. Granda, Englishtown, all of N.J., assignors to International Flavors & Fragrances Inc., New York, N.Y.
Division of Ser. No. 206,466, Nov. 13, 1980, Pat. No. 4,312,888, which is a continuation-in-part of Ser. No. 133,870, Mar. 25, 1980, Pat. No. 4,319,036. This application Sep. 17, 1981, Ser. No. 303,163
Int. Cl.³ A61K *7/46*
U.S. Cl. 252—522 R **4 Claims**

1. A process for augmenting or enhancing the aroma of a perfume composition or cologne comprising the step of adding to a perfume composition or cologne base an aroma augmenting or enhancing quantity of at least one compound defined according to the generic structure:

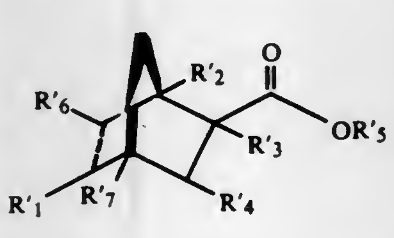

wherein the dashed line represents a carbon-carbon single bond or a carbon-carbon double bond; R_1' R_2' R_3' R_4' R_6' and R_7' are each selected from the group consisting of hydrogen and methyl and R_5' is a C_1–C_4 alkyl moiety with the provisos that:

1. one of R_1', R_2', R_6' and R_7' is methyl and the other of R_1', R_2', R_6' and R_7' represents hydrogen;
2. R_3' and R_4' are not both methyl;
3. when the dashed line is a carbon-carbon double bond, R_1', R_3' and R_4' are not all hydrogen when R_2' is methyl.

4,374,055
ALKYL ESTERS OF 1-ALKANOYL CYCLOALKANOLS AND ORGANOLEPTIC USES THEREOF
Ronald P. Schreck, Old Bridge, N.J.; Kenneth K. Light, North Ogden, Utah; John B. Hall, Rumson, N.J.; Frederick L. Schmitt, Holmdel, N.J.; Manfred H. Vock, Locust, N.J.; William L. Schreiber, Jackson, N.J.; Joaquin F. Vinals, Red Bank, N.J., and Jacob Kiwala, Brooklyn, N.Y., assignors to International Flavors & Fragrances Inc., New York, N.Y.
Division of Ser. No. 133,828, Mar. 25, 1980, Pat. No. 4,327,749. This application Oct. 22, 1981, Ser. No. 314,002
Int. Cl.³ A61K *7/46*
U.S. Cl. 252—522 R **2 Claims**

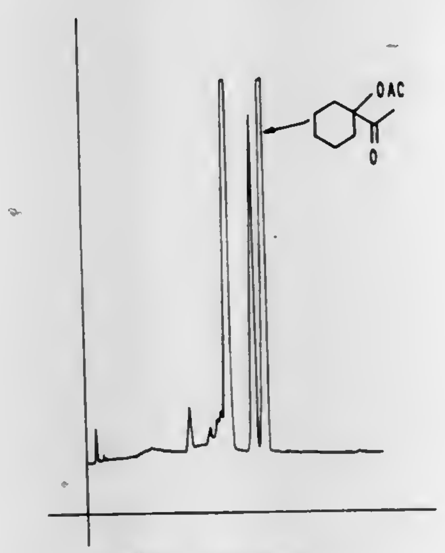

GLC PROFILE FOR EXAMPLE I

1. A process for augmenting or enhancing the organoleptic properties of a consumable material selected from the group consisting of perfume compositions, and colognes, comprising the step of adding to said consumable material an organoleptic property augmenting or enhancing quantity of at least one compound having the generic structure:

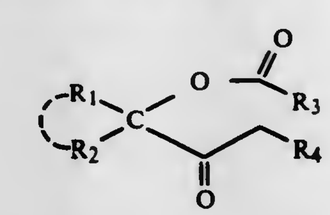

wherein R_1 and R_2 taken together complete a cycloalkyl moiety or a methyl, dimethyl or trimethyl cycloalkyl moiety containing five or six carbon atoms in the ring and wherein R3 is C_1–C_3 lower alkyl and R_4 is methyl or hydrogen.

4,374,056
LOWLY IRRITATING DETERGENT
Hiroshi Watanabe, Funabashi, and Hajime Hirota, Tokyo, both of Japan, assignors to Kao Soap Co., Ltd., Tokyo, Japan
Filed Nov. 2, 1981, Ser. No. 317,225
Claims priority, application Japan, Nov. 27, 1980, 55-167156
Int. Cl.³ C07C *103/44, 103/50;* **C11D** *1/10, 1/94*
U.S. Cl. 252—546 **7 Claims**

1. A detergent comprising an amide-amine type amphoteric surface active agent represented by the following general formula (1):

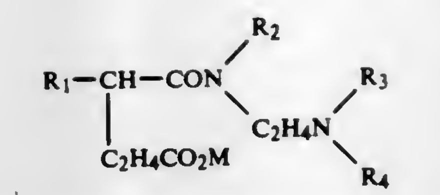

(1)

wherein R_1 stands for an alkyl or alkenyl group having 6 to 20 carbon atoms, R_2 stands for H or C_2H_4OH, R_3 and R_4 are each H, C_2H_4OH, or $C_2H_4CO_2M$, and M stands for H, an alkali metal, ammonium or organic ammonium.

4,374,057
AQUEOUS DISPERSIONS OF FREE RADICAL-GENERATING POLYMERIZATION INITIATORS
Donald Goodman, Flemington, N.J.; Mario Q. Ceprini, Cedarhurst; Samuel Hoch, Brooklyn, both of N.Y., and Marvin Koral, Warren, N.J., assignors to Tenneco Chemicals, Inc., Piscataway, N.J.
Filed Aug. 3, 1981, Ser. No. 289,551
Int. Cl.³ B01J *31/02*
U.S. Cl. 252—426 **15 Claims**

1. An aqueous dispersion of a free radical-generating polymerization initiator that is a shelf-stable liquid at temperatures at which the initiator can be stored safely comprising

a. 10% to 50% by weight of a free radical-generating polymerization initiator that is liquid at temperatures at which it can be stored safely,
b. 0.8% to 3% by weight of a suspending agent,
c. 0.1% to 1.0% by weight of a wetting agent selected from the group consisting of anionic surfactants, nonionic surfactants, and mixtures thereof,
d. 0 to 50% by weight of an antifreeze additive that is an alcohol having 1 to 3 carbon atoms, and
e. 2% to 15% by weight of an organic solvent.

4,374,058
METHOD FOR PRODUCING POWDERED DETERGENT CONTAINING ALPHA OLEFIN SULFONATE
Burton Brooks, Bellevue, Wash., assignor to The Chemithon Corporation, Seattle, Wash.
Filed Oct. 26, 1981, Ser. No. 315,160
Int. Cl.³ C11D *11/00, 11/02, 1/37*
U.S. Cl. 252—556 **9 Claims**

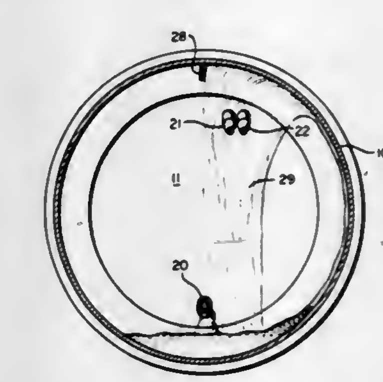

1. A method for producing a powdered detergent containing an alkyl benzene sulfonate and an alpha olefin sulfonate, said method comprising the steps of:
providing a first slurry containing neutralized alkyl benzene sulfonate without alpha olefin sulfonate;
spray-drying said first slurry in a heated spray drying tower to produce dry, powdery particles containing alkyl benzene sulfonate;
introducing said dry, powdery particles containing alkyl benzene sulfonate into the upstream end of a mixing zone;
advancing said dry, powdery particles containing alkyl

benzene sulfonate toward said downstream end of the mixing zone;
lifting and dropping said particles containing alkyl benzene sulfonate as they undergo advancement in said mixing zone;
providing, at the upstream end of the mixing zone, a second slurry of neutralized alpha olefin sulfonate containing liquid water;
spraying said second slurry onto said dry powdery particles containing alkyl benzene sulfonate, as said particles undergo said lifting and dropping, to form composite particles of relatively uniform size and composition comprising said alkyl benzene sulfontate and said alpha olefin sulfonate;
the liquid water in said second slurry being absorbed into said composite particles to dry said second slurry;
and removing said composite particles as a relatively dry powder from the downstream end of said mixing zone.

4,374,059
PROCESS FOR MAKING FRICTION PRODUCTS
Harry H. Wagner, Ridgeway, Pa., assignor to Carlisle Corporation, Cincinnati, Ohio
Continuation of Ser. No. 84,354, Oct. 12, 1979, Pat. No. 4,268,467. This application May 11, 1981, Ser. No. 262,324
Int. Cl.^{3} C08K *3/22*
U.S. Cl. 523—153 **6 Claims**

1. A shaped article of thermally-resistant, fiber-reinforced, friction material made from a composition comprising an effective quantity of inorganic heat-resistant fiber reinforcement admixed with an effective quantity of a thermosetting resin binder system and formed by a process comprising the steps of:
(a) enclosing a quantity of said composition to be molded to said desired shape within a thermally decomposable container of flexible encapsulating material,
(b) sealing said container,
(c) placing said sealed container and contents therein within a curing mold having a shape for said shaped article,
(d) heating and pressing said composition within said mold to cure said resin binder to bond the composition into said shaped article wherein said heating within said mold thermally decomposes said container; and
(e) opening said mold and removing said molded article.

4,374,060
PROCESS FOR THE PREPARATION OF CYCLIC HEXAPEPTIDE
Ruth F. Nutt, Green Lane, Pa., assignor to Merck & Co., Inc., Rahway, N.J.
Filed Jul. 15, 1981, Ser. No. 283,404
Int. Cl.^{3} C07C *103/52*
U.S. Cl. 260—112.5 R **4 Claims**

1. A process for the preparation of Cyclo(D-Trp-Lys-Val-Phe-N-Me-Ala-Tyr) which comprises cyclizing at a molar concentration of from 0.5 to 0.001, in a solvent system consisting of N,N-dimethylformamide, dimethylsulfoxide, or mixtures thereof, the following linear peptide which may optionally be protected by one or more blocking groups:
H-D-Trp-Lys-Val-Phe-N-Me-Ala-Tyr-OH
wherein the reaction is carried out in the presence of a tertiary amine or sodium bicarbonate and diphenylphosphorylazide as a cyclizing agent at from −30° to +5° C. over a period of from 1 to 50 hours.

4,374,061
MEANS AND METHODS FOR PURIFYING Clq, Clr AND Cls
David H. Bing, Brookline, Mass., assignor to Center For Blood Research, Inc., Boston, Mass.
Filed Jul. 27, 1981, Ser. No. 287,139
Int. Cl.^{3} C07G *7/00*
U.S. Cl. 260—112 R **8 Claims**

1. A resin capable of separating Clq, Clr and Cls from fluids comprising a protein selected from the class consisting of IgG, IgM and Fc fragments thereof having linked thereto at at least one histidine site thereof an organic arm,
said arm comprising a polysaccharide linked to said protein by a portion having the following formula:

$B—N{=}N—C_6H_4—(CH_2)_n—X—(CH_2)_2—R—(CH_2)_2—X$-polysaccharide

n=1,2, 3 or 4
X=O or NH
R=SO_2 or CH_2NHCH_2 or:

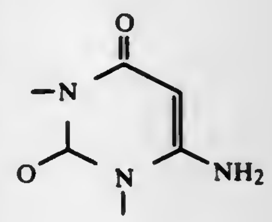

or:
$[—CH(OH)CONHCH_2]_2—$

or:
$—CH_2NHCONHCH_2—$

B=IgG, IgM or Fc fragments.

4,374,062
PROCESS FOR THE PRODUCTION OF PEPTIDES
Axel Kleemann, Hanau; Jurgen Martens, Alzenau, and Marc Samson, Hanau, all of Fed. Rep. of Germany, assignors to Degussa Aktiengesellschaft, Frankfurt, Fed. Rep. of Germany
Filed Oct. 14, 1981, Ser. No. 311,454
Claims priority, application Fed. Rep. of Germany, Oct. 16, 1980, 3039053
Int. Cl.^{3} C07C *103/52*
U.S. Cl. 260—112.5 R **10 Claims**

1. A process of producing peptides comprising asymmetrically hydrogenating a dehydropeptide of the formula

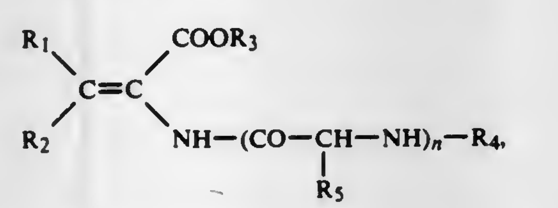

in which n is a whole number from 1 to 4, R_1 and R_2 are the same or different and are hydrogen, an alkyl group with 1 to 10 carbon atoms, or such a group substituted with a carboxyl group, a phenyl group which is unsubstituted or substituted in the 3 or 4 or in both the 3 and 4 positions by a hydroxyl, alkoxy, or acyloxy group or an indolyl which is unsubstituted or substituted in the 6 position by fluorine or chlorine or an indolyl group substituted by a methyl group, R_3 is hydrogen, an alkali metal, or a lower alkyl group with 1 to 4 carbon atoms, R_4 is hydrogen, an acetyl group or a chloroacetyl group and R_5 is hydrogen or an alkyl group having 1 to 4 carbon atoms with the proviso that when n is 2, 3, or 4, the individual groups R_5 are the same or different, in the presence of a chiral rhodium-complex which is either (1) a soluble coordination complex of a rhodium (I) compound and a chiral tertiary phosphine prepared by reaction of a chiral tertiary phosphine with (a) a complex of the formula

$[Rh(en)_2X]_2$,

wherein (en)2 is two molecules of an olefin or cycloolefin or 1 mole of a diolefin or cyclodiolefin and X is chlorine, bromine, or iodine, or (b) with a complex of the formula
$[Rh(en)_2Y]$,

where Y is acetonylacetonate or a carboxylate group or (2) a cationic complex of the formula:

$[Rh(en)_2A]^+Z^-$

where A is a chiral, tertiary phosphine, and Z is a tetrafluoroborate, tetraphenyl borate, hexafluorophosphate, or perchlorate anion.

4,374,063
PROCESS FOR THE PREPARATION AND PURIFICATION OF GELATIN AND PYROGEN-FREE GELATIN SO PREPARED
George A. Consolazio, Burlington, and Gury Pano, Jamaica Plain, both of Mass., assignors to General Foods Corporation, White Plains, N.Y.
Filed Sep. 28, 1981, Ser. No. 306,274
Int. Cl.^{3} C09H *3/02*
U.S. Cl. 260—118 **5 Claims**

1. A process of preparing an essentially pyrogen-free gelatin solution which comprises:
(a) conditioning cattle hides and/or tanner's stock in a caustic solution in a pyrogen-free vessel;
(b) water washing the hides and/or stock with pyrogen-free water;
(c) treating the hides and/or stock with an acid solution;
(d) extracting gelatin at a pH of from 3.7 to 4.7 from the hides and/or stock;
(e) filtering the extract through a low porosity filter; and
(f) recovering an essentially pyrogen-free gelatin solution.

4,374,064
METAL COMPLEXES OF DISAZO COMPOUNDS HAVING A 5-AMINO OR HYDROXY-3-CARBOXY OR METHYL-1- SUBSTITUTED PHENYLPYRAZOLE COUPLING COMPONENT RADICAL
Heinz Wicki, Basel, Switzerland, assignor to Sandoz Ltd., Basel, Switzerland
Filed Apr. 28, 1980, Ser. No. 144,380
Claims priority, application Switzerland, May 2, 1979, 4117/79
Int. Cl.^{3} C09B *45/26, 45/28, 45/30, 45/32*
U.S. Cl. 260—147 **54 Claims**

1. A metal complex of a disazo compound of the formula

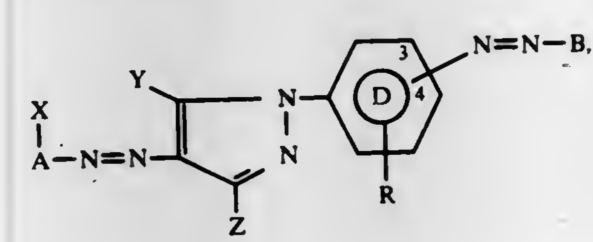

(I)

or a salt thereof each cation of which is non-chromophoric, wherein
A-X is the radical of a diazo component,
wherein X is a metallizable group or a substituent convertible to a metallizable group, with the proviso that X is ortho to the —N=N— radical,
B is the radical of a coupling component of the formula

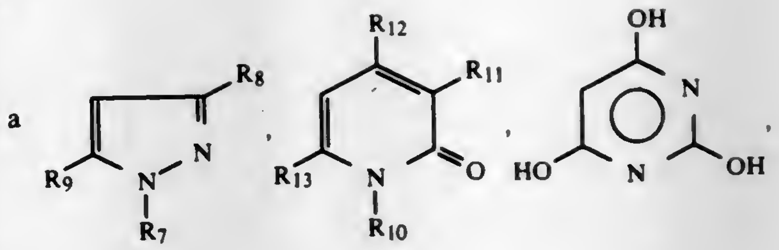

(b$_1$) (b$_2$) (b$_3$)

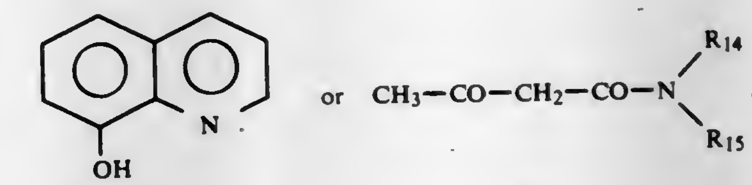

(b$_4$) (b$_5$)

wherein R_7 is hydrogen,

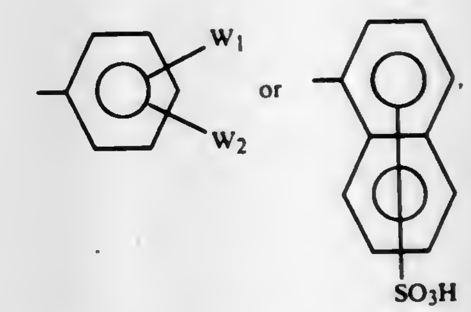

wherein W_1 is hydrogen, chloro, methyl, methoxy, cyano, nitro, carboxy, $—SO_2NW_3W_4$ or sulfo,
wherein each of W_3 and W_4 is independently hydrogen, C_{1-4}-alkyl or C_{2-4}-alkyl substituted in the 2-, 3- or 4-position by hydroxy or C_{1-4}-alkoxy, and
W_2 is hydrogen, chloro, methyl, methoxy or carboxy,
R_8 is C_{1-4}alkyl, phenyl, carboxy or $—CONW_3W_4$,
wherein each of W_3 and W_4 is independently hydrogen, C_{1-4}alkyl or C_{2-4}-alkyl substituted in the 2-, 3- or 4-position by hydroxy or C_{1-4}alkoxy,
R_9 is —OH or —NH_2,
R_{10} is hydrogen; amino; phenylamino; C_{1-8}alkyl; C_{6-9}cycloalkyl; cycloalkyl substituted by 1, 2 or 3 alkyl groups, the total number of carbon atoms therein being 6 to 9, inclusive; carboxy(C_{1-4}alkyl); C_{2-4}alkyl substituted by hydroxy, methoxy, ethoxy or sulfo, with the proviso that any hydroxy, methoxy or ethoxy substituent is in the 2-, 3- or 4-position;

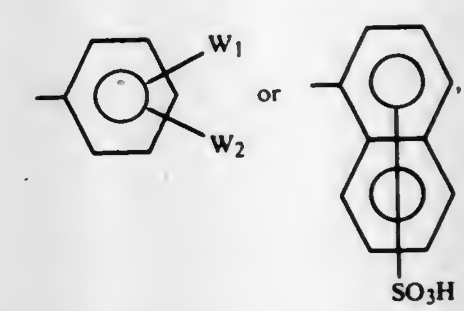

wherein W_1 and W_2 are as defined above,
R_{11} is hydrogen, carboxy, sulfo, acetyl or cyano,
R_{12} is hydrogen, hydroxy, methyl, carboxy, phenyl or sulfomethylene,
R_{13} is hydrogen, hydroxy or methyl, with the proviso that at least one of R_{12} and R_{13} is hydroxy,
R_{14} is hydrogen or C_{1-4}alkyl, and
R_{15} is C_{1-8}alkyl; C_{6-9}cycloalkyl; cycloalkyl substituted by 1, 2 or 3 alkyl groups, the total number of carbon atoms therein being 6 to 9, inclusive;

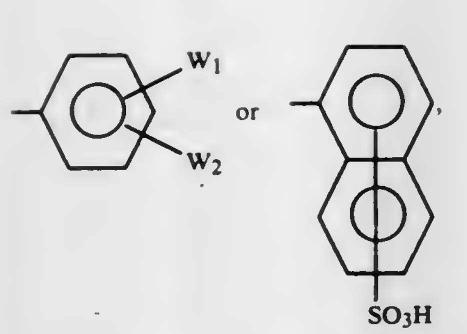

wherein W_1 and W_2 are as defined above, with the proviso that the —N═N—B group is in the 3- or 4-position of Ring D,

R is hydrogen, halo, methyl or sulfo,

Y is —OH or —NH_2, and

Z is methyl or carboxy,

wherein each halo is independently fluoro, chloro, bromo or iodo, with the provisos that (i) the disazo compound contains at least one water-solubilizing group and (ii) the metal complex may be in salt form only if the disazo compound contains at least one sulfo or carboxy group or if it is a 1:2 metal complex.

4,374,065

ANTIBACTERIAL AGENTS OF THE β-LACTAM TYPE

Marcel Menard, Candiac, and Alain Martel, Delson, both of Canada, assignors to Bristol-Myers Company, New York, N.Y.

Division of Ser. No. 77,886, Sep. 21, 1979, Pat. No. 4,282,150, which is a continuation-in-part of Ser. No. 968,663, Dec. 18, 1978, abandoned. This application Apr. 13, 1981, Ser. No. 254,551

Int. Cl.³ C07D *499/02;* **A61K** *31/425*

U.S. Cl. 260—245.2 R **6 Claims**

1. A compound having the formula

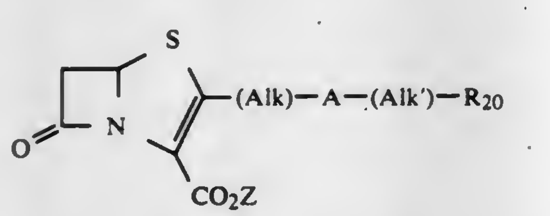

wherein Z is hydrogen or a conventional carboxyl protecting group; Alk represents a C_1-C_2 alkylene group optionally substituted by a C_1-C_4 alkyl radical; A is S, SO, SO_2 or NR_{21} in which R_{21} is hydrogen, (lower)alkyl, phenyl or phenyl(lower-)alkyl; Alk' is a C_2-C_4 alkylene group and R_{20} is —NHOH, —NO_2 or —$NR_{22}R_{23}$ in which R_{22} and R_{23} are each independently hydrogen or (lower)alkyl; or a pharmaceutically acceptable salt thereof.

4,374,066

METHOD FOR MAKING TRIARYLSULFONIUM SALTS

James V. Crivello, Clifton Park, and Julia L. Lee, Schenectady, both of N.Y., assignors to General Electric Company, Schenectady, N.Y.

Continuation-in-part of Ser. No. 79,692, Sep. 28, 1979. This application Oct. 27, 1980, Ser. No. 200,769

Int. Cl.³ C07F *9/68, 9/90, 5/02*

U.S. Cl. 260—440 **5 Claims**

1. A method for making triarylsulfonium salts of the formula,

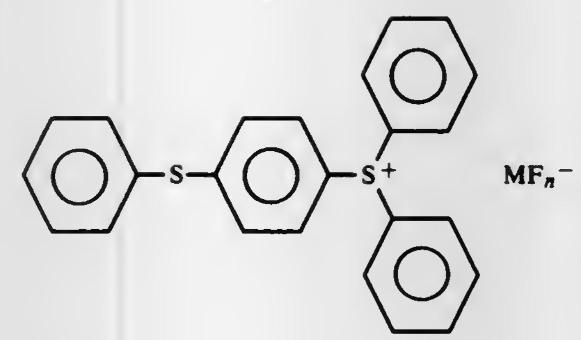

which comprises,

(1) stirring a mixture of 4 moles of benzene per mole of sulfur monochloride in the presence of an effective amount of aluminum chloride at a temperature of between about 30°-35° C.,

(2) introducing chlorine into the mixture in an amount substantially equivalent to the moles of sulfur monochloride utilized in (1),

(3) combining the mixture of (2) with sufficient water to decompose the resulting complex,

(4) recovering the resulting triphenylsulfonium chloride from the mixture of (3),

(5) combining the recovered triphenylsulfonium chloride in the form of an aqueous mixture with an alkali metal or metalloid salt selected from the class consisting of potassium hexafluoroarsenate, potassium hexafluoroantimonate and sodium tetrafluoroborate and

(6) recovering the resulting triphenylsulfonium polyfluoro metal or metalloid salt from the mixture of (5), where M is a metal or metalloid selected from arsenic, antimony and boron, and n is an integer having a value of 4-6.

4,374,067

INTERMEDIATES FOR THE PREPARATION OF 4-PHENYL-1,3-BENZODIAZEPINS AND METHODS FOR PREPARING THE INTERMEDIATES

Thomas B. K. Lee, Whitehouse Station, and George E. Lee, Somerville, both of N.J., assignors to Hoechst-Roussel Pharmaceuticals, Inc., Somerville, N.J.

Filed Dec. 23, 1981, Ser. No. 333,965

Int. Cl.³ C07C *143/68, 125/06, 103/127*

U.S. Cl. 260—456 A **8 Claims**

1. A compound of the formula

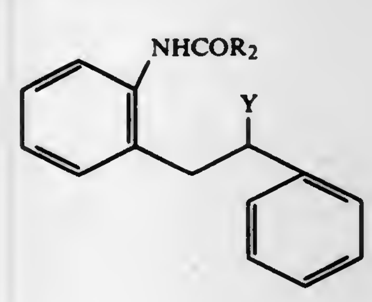

where Y is —OH; halogen;

$$\begin{array}{c} \text{OH} \\ | \\ -\text{N}-\text{CH}_3; \end{array}$$

R_1SO_3—; where R_1 is a straight chain or branched chain alkyl group having 1 to 5 carbon atoms, or aryl; and R_2 is —$C(CH_3)_3$ or —$OC(CH_3)_3$.

4,374,068

PROCESS FOR HYDROXYALKYLATION OF CYANOETHYLANILINES

Edward W. Kluger, Pauline, and Jack L. Rolen, Inman, both of S.C., assignors to Milliken Research Corporation, Spartanburg, S.C.

Filed Oct. 15, 1981, Ser. No. 311,661

Int. Cl.³ C07C *121/80*

U.S. Cl. 260—465 D **12 Claims**

1. A process for hydroxyalkylation of cyanoethylanilines which comprises reacting an alkylene oxide of the formula:

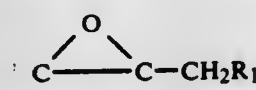

wherein R_1 is selected from H, Cl, Br, OH, a lower alkyl group containing from 1 to about 4 carbon atoms, or phenyl with a cyanoethylaniline in a molar ratio of from about 1:1 to about 2:1 in a reaction medium at a temperature of less than 100° C. in the presence of an acid catalyst provided in an amount sufficient to catalyze said reaction to thereby provide the corresponding hydroxyalkylated cyanoethylaniline.

4,374,069

PROCESS FOR THE PREPARATION OF TRANS-3-FORMYLBUT-2-ENENITRILE

Shi-Chow Chen, Edmonton, and John M. MacTaggart, both of Edmonton, Canada, assignors to Alberta Research Council, Edmonton, Canada

Division of Ser. No. 113,444, Jan. 21, 1980, Pat. No. 4,361,702. This application Apr. 13, 1981, Ser. No. 253,319

Int. Cl.³ C07C *121/34*

U.S. Cl. 260—465.4 **6 Claims**

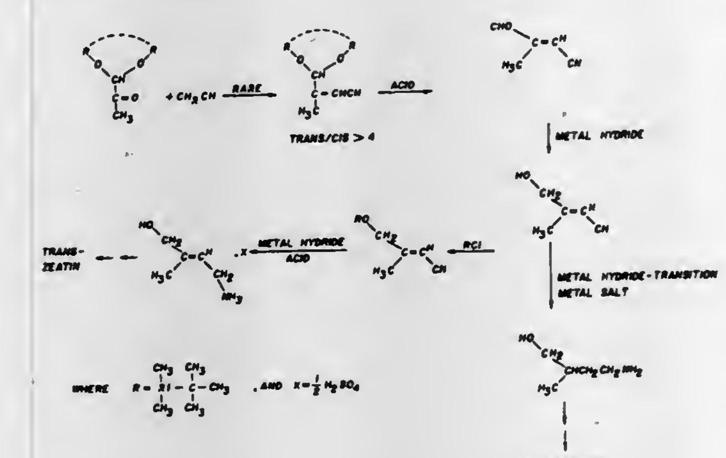

1. trans-3-Formylbut-2-enenitrile having the structure:

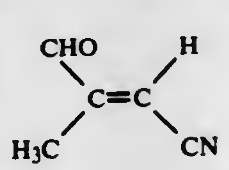

2. The process comprising:

reacting a pyruvaldehyde acetal having the general formula

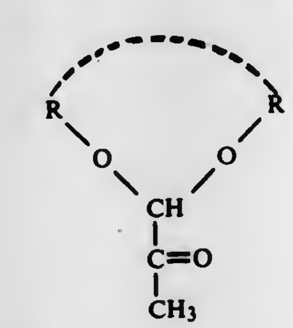

where R is an alkyl, cycloalkyl, substituted alkyl, or alkenyl group having from about 1-10 carbon atoms, or part of a methylene chain in a cyclic acetal of a 5-10 membered ring structure, with acetonitrile in the presence of a strong base at an elevated temperature for a time sufficient to form an acetal of 3-formylbut-2-enenitrile; and

hydrolyzing the acetal of 3-formylbut-2-enenitrile in an acidic solution selected from the group consisting of an aqueous mineral acid, an aqueous strong organic acid, an aqueous mineral acid and a water miscible organic solvent, and an aqueous strong organic acid and a water miscible organic solvent, to form a product mixture containing trans-3-formylbut-2-enenitrile.

4,374,070

PREPARATION OF ACETIC ANHYDRIDE

Thomas H. Larkins; Stanley W. Polichnowski; Gerald C. Tustin, all of Kingsport, Tenn., and David A. Young, Baton Rouge, La., assignors to Eastman Kodak Company, Rochester, N.Y.

Filed Nov. 21, 1980, Ser. No. 209,350

Int. Cl.³ C07C *51/54*

U.S. Cl. 260—549 **4 Claims**

1. In a process for the preparation of acetic anhydride by the carbonylation of methyl acetate in the presence of rhodium and an iodine compound at elevated pressure and temperature, the improvement comprising the presence of about 2 to 7 volume percent hydrogen in the gas fed to the carbonylation reactor and the carbonylation is carried out in the presence of lithium.

4,374,071

COUNTERFLOW COOLING TOWER

Ulrich Regehr, 51 Aachen, Susterfeld 65, Fed. Rep. of Germany

Filed Aug. 12, 1981, Ser. No. 292,162

Claims priority, application Fed. Rep. of Germany, Aug. 12, 1980, 3030395; Aug. 12, 1980, 3030439

Int. Cl.³ B01F *3/04*

U.S. Cl. 261—109 **11 Claims**

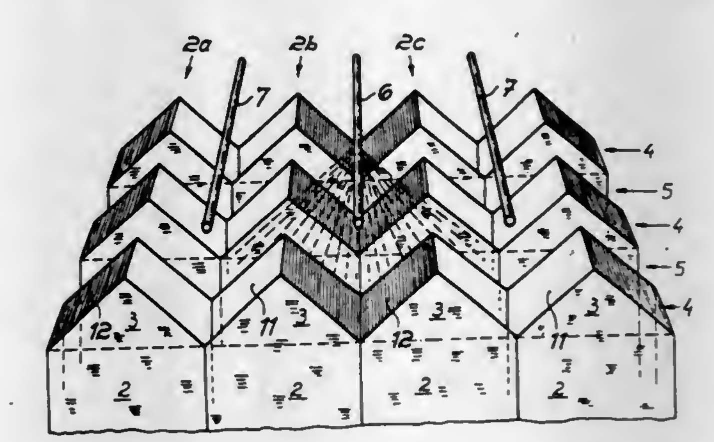

1. A counterflow cooling tower comprising a casing having cooling air inlet openings formed at its lower end and cooling air outlet openings formed at its upper end; a contact body positioned in said casing and formed from a plurality of contact layers arranged in banks and defining a plurality of water and air flow channels therebetween providing communication between said air inlet and outlet openings; means positioned above said contact body for supplying warm water to be cooled to said channels; channel caps on top of only some of said channels fitted geometrically to adjacent contact layers, said channel caps covering some of said channels against water from said means for supplying warm water; said means for supplying warm water comprising elongated spray nozzles installed in the areas between the channel caps and running at an angle to the channels over the extent of the banks; and means for supplying cooling air from said air inlet openings through substantially all of said channels to said air outlet openings, whereby the temperature and moisture-content of air supplied to the channels to which warm water is supplied are increased while the temperature of air supplied to the other

channels is increased by heat transfer through adjacent layers of the contact body without substantially changing the moisture-content thereof.

4,374,072
REFLEX FAN CYLINDER FOR WATER COOLING TOWERS

Samuel W. Bell, Jr., Shawnee Mission, Kans., assignor to Marley Company, Mission, Kans.
Filed Aug. 31, 1981, Ser. No. 298,086
Int. Cl.³ F04D *29/54*
U.S. Cl. 261—109 **6 Claims**

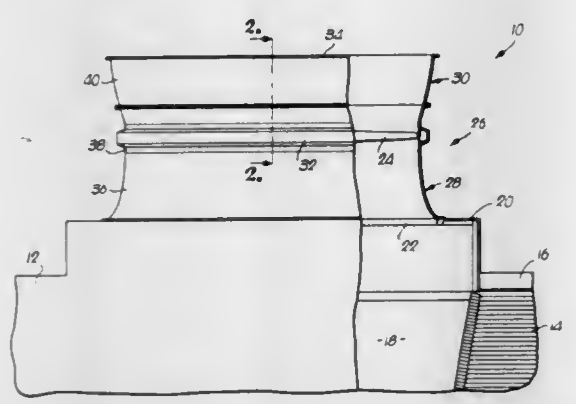

1. In a fan assembly for a water cooling tower having a fan blade rotatable about an upright axis, the combination with said blade of an upright, open-ended tubular body coaxial with the fan in surrounding relationship thereto and provided with a lower, generally cylindrical wall section aligned with and receiving the fan blade, said lower blade-receiving wall section having an effective height at least equal to the effective cross-sectional height of the area occupied by the fan blade during rotation thereof, said tubular body further being provided with a reflex recovery wall section joined to and extending upwardly from the lower blade-receiving wall section, said recovery wall section having a lower, tubular portion projecting upwardly from the blade-receiving wall section and diverging outwardly from the cylindrical blade-receiving wall section above the fan blade at a first angle relative to the blade-receiving wall section and thereby the axis of rotation of the fan blade, the recovery wall section being provided with a second tubular portion projecting upwardly from the lower tubular portion thereof and configured such that the second wall portion is at a second angle relative to the first portion which is a different angle relative to the axis of rotation than the angularity of the first tubular portion with respect to such axis, the angularity of the first wall portion with respect to said axis being greater than the angularity of the second wall portion to such axis, said first angle being from 15° to 30° and the second angle being up to about 10°.

4,374,073
METHOD OF MAKING A HEAT-SEALED PYROTECHNIC CAP

Harold H. Hall, Jr., Marblehead; Andre C. Bouchard, Peabody, both of Mass.; John W. Shaffer, and Thomas L. Gavenonis, both of Williamsport, Pa., assignors to GTE Products Corporation, Stamford, Conn.
Division of Ser. No. 2,263, Jan. 10, 1979, Pat. No. 4,267,774. This application Oct. 6, 1980, Ser. No. 194,709
Int. Cl.³ C06B *21/00*
U.S. Cl. 264—3 R **12 Claims**

1. A method of making a pyrotechnic cap for providing an audible signal of high intensity upon receipt of energy in the form of light and/or heat from a flashlamp; said method comprising:
providing a plastic container having in cross-section at least two side walls, said side walls defining an open end within said container;
depositing a quantity of pyrotechnic mixture within said container through said open end, said mixture occupying a predetermined level within said container; and

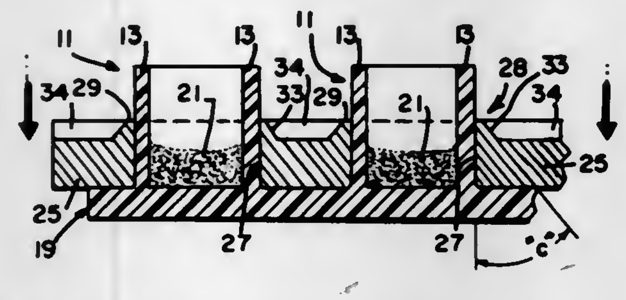

engaging said side walls with a heated first platen to form a heat-seal between said walls, said heat-seal hermetically sealing said open end.

4,374,074
PROCESS FOR PRODUCING FIBERS WITH A SPECIALLY FIXED SIZE FROM MELTS

Setsuo Ueda, Chigasaki; Takashi Yasuda, Aichi; Tokuyoshi Yamada, Nagoya, and Shigeki Kobayashi, Tokyo, all of Japan, assignors to Sato Technical Research Laboratory Ltd., Kanagawa and Itoh Metal Abrasive Co., Ltd., Aichi, both of, Japan
Continuation of Ser. No. 69,851, Aug. 27, 1979, Pat. No. 4,323,523. This application Oct. 31, 1980, Ser. No. 202,864
Claims priority, application Japan, Aug. 29, 1978, 53-104430
Int. Cl.³ B01J *2/14*
U.S. Cl. 264—8 **5 Claims**

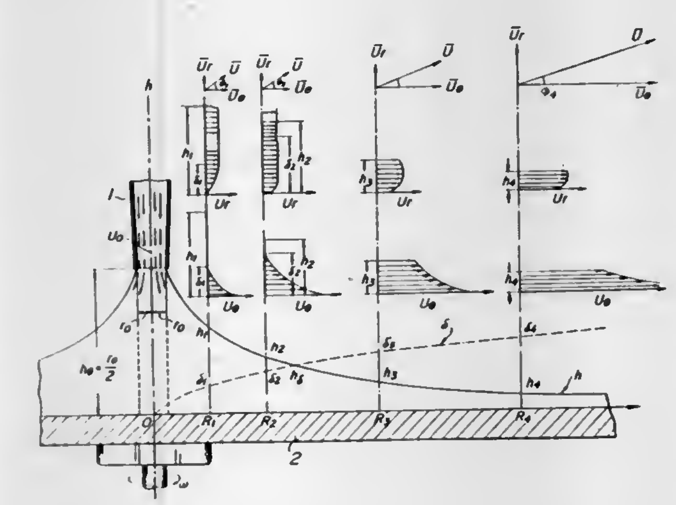

1. A process for producing fibers with an analytically predetermined diameter from a melt comprising:
establishing a kinematic viscosity of the melt in a range of 0.001 to 10 cm^2/sec. by heating the melt at a temperature higher than its melting point, wherein said melt consists essentially of at least one material selected from the group consisting of metal, slag, flux and a mixture thereof;
introducing the melt through a conduit at a predetermined outflow velocity in a range of 5 to 500 cm/sec. onto the center of a rotating disk having a rotational speed in the range of 3,000 to 30,000 rpm and an effective disk diameter of 50–200 mm having a flat refractory surface;
locating said conduit having an outlet with a radius r_o of 3 to 30 mm so that the distance h_o between said conduit outlet and said disk surface is maintained within a range of $r_o/2$ to $r_o/2+2$ mm;
forming a film stream of said melt with a predetermined thickness, at least, in the proximity of the periphery of said disk surface by centrifugal force, said film stream being provided with a tangential velocity component as well as a radial velocity component throughout the entire thickness thereof, by selecting an effective diameter of the disk surface in a range of 50 to 200 mm;
projecting said film stream into a free space of air atmosphere from the periphery of said disk by said centrifugal force resulting from the rotation of said disk;
splitting said film stream into free linear streams with a predetermined radius by sudden termination of said tangential velocity component and additional action of surface tension;
sucking a gas stream in a direction parallel and cocurrent to said linear streams of the melt, thereby lengthening the path of motion of said linear streams; and
solidifying said free linear streams with cooling by temperature difference between said linear stream and the ambient atmosphere during space motion to produce fibers with an analytically predetermined diameter.

4,374,075
METHOD FOR THE PLASMA-ARC PRODUCTION OF METAL POWDER

Charles F. Yolton, Coraopolis, Pa.; Thomas S. Cloran, East Liverpool, Ohio, and Thomas W. Sloan, Calcutta, Ohio, assignors to Crucible Inc., Pittsburgh, Pa.
Filed Jun. 17, 1981, Ser. No. 274,604
Int. Cl.³ B01J *2/04*
U.S. Cl. 264—8 **9 Claims**

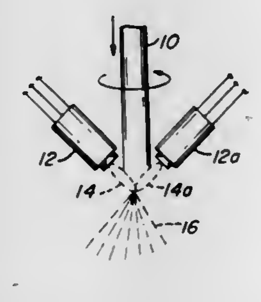

1. A method for making atomized metal particles, comprising:
(a) directing a plasma arc gas jet to contact a solid metal article to simultaneously heat, to melt, and to atomize said metal into droplets, and
(b) cooling said metal droplets to solidification within an inert atmosphere to form said metal particles, while maintaining said droplets free from surface contact prior to solidification.

4,374,076
METHOD FOR MAKING CAST EPOXY RESIN BODIES AND EPOXY FORMULATION THEREFOR

James E. Stephan, Arvada; Paul A. Boduch, Lakewood, and John A. Elverum, Englewood, all of Colo., assignors to Coors Porcelain Company, Golden, Colo.
Filed Oct. 9, 1981, Ser. No. 310,170
Int. Cl.³ B29C *5/00;* **A61C** *13/08*
U.S. Cl. 264—19 **21 Claims**

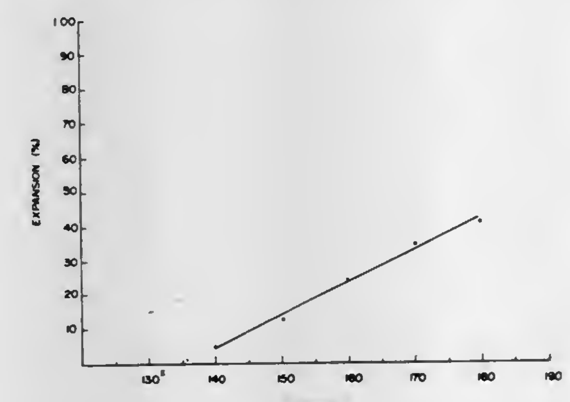

1. A method for making a cast epoxy resin body to close shape tolerances, said method comprising:
forming a uniform mixture of Components A and Component B in a ratio of about from 20 to 50 parts by weight Component B to each 100 parts by weight Component A, Component A consisting essentially of from about 40 to 70% by weight epoxy novolac polymer, from about 30 to 50% by weight vinyl-3-cyclohexene diepoxide and from 0 to about 20% by weight 3,4 epoxy cyclohexylmethyl-3,4-epoxy cyclohexane carboxylate; and Component B consisting essentially of partially hydrolyzed aryl tetracarboxylic acid dianhydride.
casting said mixture in a mold, said mixture being allowed to remain in the mold until it cures to a solid body; and
heating said solid body for a sufficient time and at a sufficient temperature to cause it to permanently expand at least sufficiently to compensate for the shrinkage of said body which occurred during the curing thereof in the mold.

4,374,077
PROCESS FOR MAKING INFORMATION CARRYING DISCS

Donald J. Kerfeld, St. Paul, Minn., assignor to Minnesota Mining and Manufacturing Company, St. Paul, Minn.
Filed Feb. 1, 1980, Ser. No. 117,467
Int. Cl.³ B29D *11/00*
U.S. Cl. 264—22 **14 Claims**

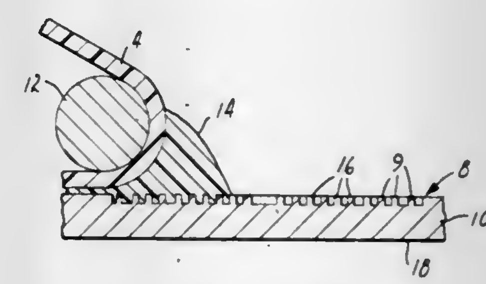

1. A method for making an information carrying disc or disc blank which comprises (1) moving a first layer relative to a second layer from a nonparallel to a parallel position so as to spread in the form of a bead, a photopolymerizable liquid mass between the two layers, one of said layers having a patterned surface facing the other layer with a circular, arc-like, or spiral pattern of depressions, protuberances, grooves with or without modulations or combinations of depressions, protuberances and grooves with or without modulations, the other of said layers having a surface to which the photopolymerizable liquid will bond upon polymerizing, (2) then irradiating said photopolymerizable liquid to polymerize said liquid and bond the polymer formed to the other of said layers, and then (3) removing said polymer and the layer to which it is bonded from said patterned surface.

4,374,078
METHOD OF FORMING FLOOR DRAINAGE TROUGH INSTALLATION

John K. D. Richardson, 303 Nantucket Blvd., Scarborough, Ontario, Canada M1P 2P2
Filed Sep. 12, 1980, Ser. No. 186,626
Int. Cl.³ E04B *1/16*
U.S. Cl. 264—35 **8 Claims**

1. A method of forming a floor drainage trough installation comprising the steps of molding plastics material in a mold to form a deformable floor drainage trough comprising a bottom wall and upstanding side walls, with strips of fabric material having closely spaced resilient elements been incorporated in the mold during the molding of the plastics material and being thereby coated with the plastics material, removing the trough from the mold before the plastics material has fully set and allowing said plastics material coated elements under the influence of the resiliency thereof to project outwardly from the upper edge portions of the side walls of the trough, fully setting the plastics material, positioning the trough in the desired

location, and pouring a body of cementitious material constituting a floor to set the drainage trough therein with the closely spaced elements of the fabric material being securely embedded in the body of cementitious material, shrinkage of the body of cementitious material during curing thereof caus-

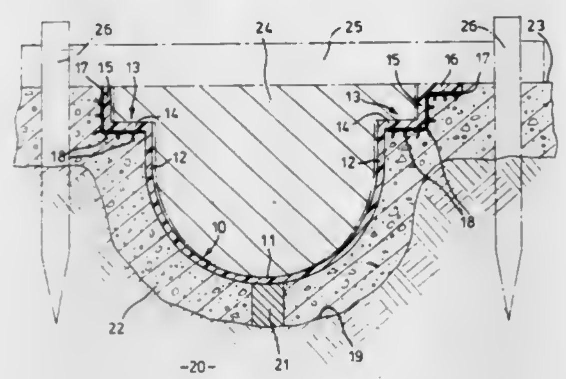

ing deformation of the trough such that the upper edge portions of the side walls of the trough are splayed apart thereby substantially preventing gaps between said upper edge portions of the side walls of the trough and the body of cementitious material.

4,374,079

METHOD AND APPARATUS FOR MANUFACTURING EXPANDED AND LAYERED SEMIROUND PLASTIC TUBINGS

James L. Fouss; Larry A. Rosenbaum, and James L. Child, Jr., all of Findlay, Ohio, assignors to Hancor, Inc., Findlay, Ohio

Filed Mar. 4, 1981, Ser. No. 240,602

Int. Cl.[3] B29D *27/00;* **B29C** *17/07, 17/10*

U.S. Cl. 264—46.1 **34 Claims**

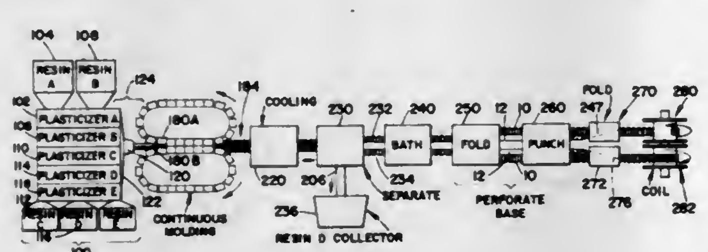

1. The method for concurrently manufacturing at least two hollow tubing structures, which tubing structures each comprise a top wall and a generally flat base which is at least partially integral with the top wall, the method comprising:

concurrently extruding at least a first pair of hollow sleeves formed at least partially of a first polymeric material;

advancing a strip of a material which is adhesively non-compatible with the first polymeric material between and contacting the hollow sleeves during extrusion of the hollow sleeves; and

separating the first and second hollow sleeves from the adhesively non-compatible strip.

4,374,080

METHOD AND APPARATUS FOR ENCAPSULATION CASTING

Jon M. Schroeder, Santa Clara, Calif., assignor to Indy Electronics, Inc., Manteca, Calif.

Filed Jan. 13, 1981, Ser. No. 224,659

Int. Cl.[3] B29C *6/00, 6/02*

U.S. Cl. 264—102 **7 Claims**

1. A method for encapsulation casting comprising the steps of:

a. securing an item to be encapsulated to a first surface of a split matrix molding cavity element and then mating a surface of another split matrix molding cavity element with said first surface to which said item is secured thereby forming a composite cavity about the matrix and with an orifice extending from the cavity to the exterior whereby a stack of mated matrix elements is established, said item being enclosed within the molding cavity established therein;

b. rigidly securing said stack of mated matrix elements;

c. filling said molding cavity in said rigidly secured stack with a quantity of particulate filler material;

d. evacuating said molding cavity containing said item to be encapsulated and said particulate filler material so as to remove gases and moisture;

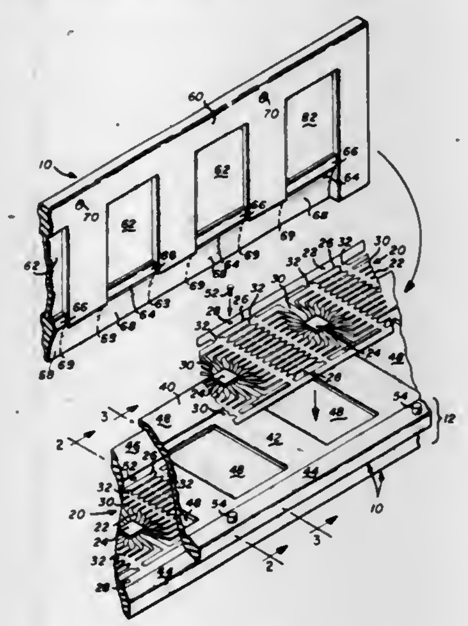

e. filling said evacuated molding cavity with an encapsulating compound;

f. removing the source of vacuum, thus allowing atmospheric pressure to act on the encapsulating compound; and

g. solidifying said encapsulating compound into an integral whole including said particulate filler material and encapsulating said item to be encapsulated.

4,374,081

CURE OF EPOXY SYSTEMS AT REDUCED PRESSURES

Arnold A. Hiltz, Swarthmore, and Francis L. Moy, Philadelphia, both of Pa., assignors to General Electric Co., Philadelphia, Pa.

Filed Sep. 17, 1981, Ser. No. 303,078

Int. Cl.[3] B29B *3/00;* **B29C** *6/00*

U.S. Cl. 264—102 **2 Claims**

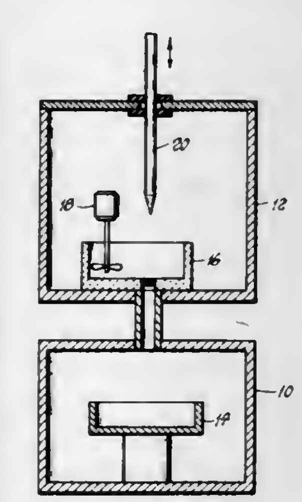

2. A method of curing epoxide compounds used as encapsulants for fragile structures, said epoxide compounds from the group consisting of those which have been flexibilized with dimer acids and catalyzed with a heavy metal soap, and those which have been catalyzed with an amide comprising:

placing the mixed compound in a container;

reducing the ambient pressure to at least 4.99×10^3 Pa while maintaining the ambient temperature at least 40° C. but no higher than 65° C. while mixing the compound;

pouring the mixed compound into a mold containing the part to be encapsulated while maintaining the vacuum and temperature; and

after at least 10 minutes, further reducing the ambient pressure to 4.79 Pa or lower and maintaining these conditions until the compound is cured.

4,374,082

METHOD FOR MAKING A PHARMACEUTICAL AND/OR NUTRITIONAL DOSAGE FORM

Richard Hochschild, 2915 Pebble Dr., Corona Del Mar, Calif. 92625

Filed Aug. 18, 1981, Ser. No. 293,782

Int. Cl.[3] B28B *19/00;* **B29B** *1/02*

U.S. Cl. 264—129 **10 Claims**

1. A method other than tableting or encapsulating for making a dosage form suitable for oral administration, wherein lecithin, by way of the cohesive characteristics thereof, is utilized as a carrier or base by which active substances may be combined with the lecithin in a solid structure, said method comprising the steps of:

blending one or more active substances with the lecithin,

working the blend into a homogeneous mixture having a plastic consistency, and

shaping said mixture into one or more swallowable dosage units.

4,374,083

NUCLEAR REACTOR HAVING A LIQUID COOLANT

Hans Deinlein, Nuremberg, and Gottfried Kummer, Marloffstein, both of Fed. Rep. of Germany, assignors to Kraftwerk Union Aktiengesellschaft, Mulheim an der Ruhr, Fed. Rep. of Germany

Filed Jun. 26, 1979, Ser. No. 52,256

Claims priority, application Fed. Rep. of Germany, Jun. 27, 1978, 2828153

Int. Cl.[3] G21C *7/00*

U.S. Cl. 376—306 **9 Claims**

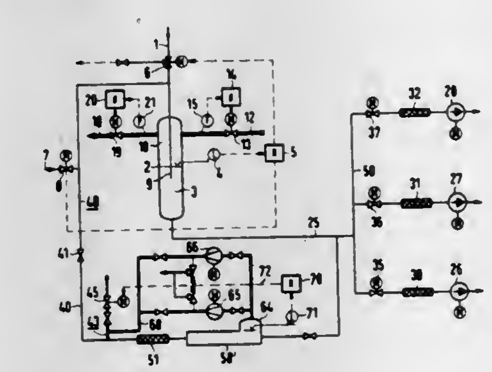

1. In a nuclear reactor with a primary loop and a liquid coolant loop connected to the primary loop, having a volume control surge tank for the coolant disposed in the liquid coolant loop, and a high pressure pump having a suction side and being disposed in the liquid coolant loop for feeding coolant taken from the primary loop back into the primary loop after purification, the improvement comprising a line bypassing the volume control surge tank and having an end connected to the suction side of the high-pressure pump, and means for introducing hydrogen gas into a liquid-filled section of the liquid coolant loop between the volume control surge tank and the suction side of the high-pressure pump.

4,374,084

ALLOY COMPOSITION SUITABLE FOR USE IN MAKING CASTINGS, AND A CASTING MADE THEREFROM

Geoffrey W. Meetham, Allestree, and John D. Gray, Newbold, both of England, assignors to Rolls-Royce Limited, London, England

Filed Apr. 1, 1981, Ser. No. 249,977

Claims priority, application United Kingdom, May 1, 1980, 8014554

Int. Cl.[3] C22C *19/05*

U.S. Cl. 420—449 **4 Claims**

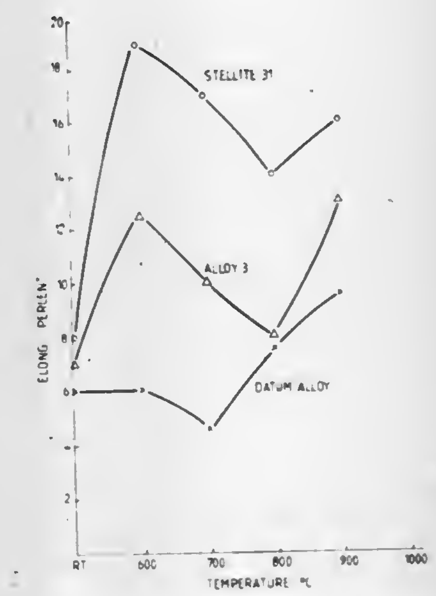

1. An alloy suitable for casting and consisting essentially of by weight percent:

Chromium	14.5–16.5%
Cobalt	9–11%
Molybdenum	5.5–8%
Aluminium	1.5–3%
Titanium	1.5–3%
Tantalum	0–1%
Niobium	0–1%
Boron	0.004–0.008%
Iron	0–0.5%
Manganese	0–0.4%
Silicon	0–0.2%
Nitrogen	0–0.5%
Carbon	0.11–0.18%

balance essentially Nickel apart from incidental impurities

4,374,085

SILVER-TIN-COPPER-PALLADIUM ALLOY AND AMALGAM THEREOF

Kamal Asgar, Ann Arbor, Mich., and Steven H. Reichman, New Hartford, N.Y., assignors to Special Metals Corporation, New Hartford, N.Y.

Filed May 29, 1980, Ser. No. 154,200

Int. Cl.[3] C22C *9/00, 30/02*

U.S. Cl. 420—470 **20 Claims**

1. An amalgable dental alloy consisting essentially of, by weight, 30 to 70% silver, 15 to 37% tin, 0.05 to 0.95% palladium, up to 4% zinc, up to 6% indium, up to 5% manganese, up to 2% cadmium, up to 2% aluminum, up to 5% gallium, up to 2% ruthenium, up to 3% mercury, balance essentially copper; said alloy having at least 13% copper and no tin-mercury phase after trituration with mercury.

4,374,086

GOLD BASED MATERIAL FOR ELECTRICAL CONTACT MATERIALS

Jaydev D. Desai, Clifton Park, N.Y., assignor to The United States of America as represented by the Secretary of the Navy, Washington, D.C.

Filed Apr. 27, 1981, Ser. No. 258,134

Int. Cl.³ C22C *5/02*

U.S. Cl. 420—507 **1 Claim**

1. An electrical contact comprising, as a contact material, a gold based sintered powder compact consisting essentially of a high purity gold powder of at least 99.99 percent purity, and a high purity powder of a compound selected from a group consisting of WC, HfB_2, TiB_2, ZrB_2, WSi_2 and $TiSi_2$ and having a hexagonal crystaline structure, the compact having a 97 percent density, a hardness of approximately 58 DPH, and a resistivity of approximately 3 μohm-cm, and having been pressed by cold isostatic pressure of at least 50,000 psi and sintered at a first temperature of approximately 900° C. for approximately two hours followed by a second temperature of approximately 1,000° C. for two hours.

4,374,087

METHOD OF STERILIZING MATTRESSES, LAUNDRY SACKS AND SIMILAR ARTICLES IN A STERILIZING APPARATUS

Bengt O. Hallström, S-182 65, Djursholm, Sweden

Filed Jun. 17, 1981, Ser. No. 274,459

Int. Cl.³ A61L *9/00*

U.S. Cl. 422—34 **4 Claims**

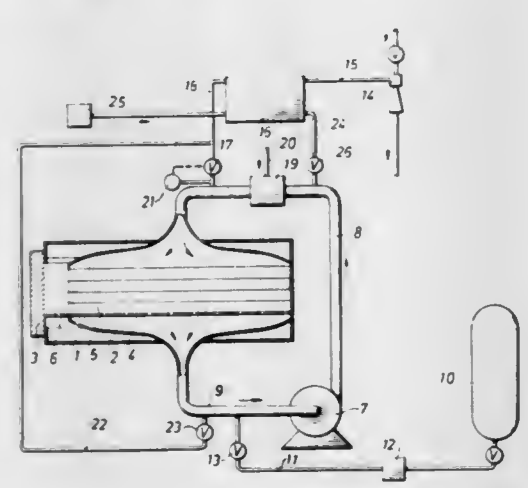

1. A method of sterilizing mattresses, laundry sacks and similar articles comprising:
(a) placing and sealing said articles in a sterilizing chamber of a sterilizing apparatus, said sealing being effected so as to leave no gap beside or between said articles;
(b) removing the air in said chamber and replacing the air with a sterilization gas;
(c) circulating said gas through the sterilizing chamber while heating and humidifying said gas;
(d) removing said gas from said chamber and replacing said gas with clean, filtered air which is heated during the period of its circulation through the sterilizing chamber; and
(e) drawing clean air into said chamber and discharging of the sterilized articles.

4,374,088

APPARATUS FOR THE TRANSFER OF ONE OR MORE SUBSTANCES BETWEEN A GAS AND A LIQUID

Kaj O. Stenberg, Staffanstorp; Lars J. C. Traven, Lund; Ingvar F. Losell, Staffanstorp, and Bo A. Johnsson, Landskrona, all of Sweden, assignors to Gambro Heart-Lung Products AB, Sweden

PCT No. PCT/SE80/00096, § 371 Date Oct. 22, 1981, § 102(e) Date Oct. 22, 1981, PCT Pub. No. WO81/02836, PCT Pub. Date Oct. 15, 1981

PCT Filed Apr. 3, 1980, Ser. No. 314,831

Int. Cl.³ A61M *1/03*

U.S. Cl. 422—46 **27 Claims**

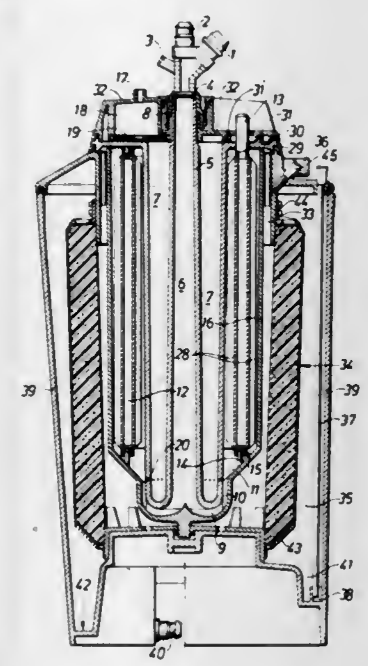

1. Apparatus for the transfer of one or more substances between a gas and a liquid, said apparatus comprising:
liquid conduction means defining a flow path for a liquid, said liquid conduction means including means defining a vertically arranged, narrow annular gap in said flow path, said annular gap having a dimension thereacross which is less than the dimension across said flow path upstream and downstream of said narrow annular gap;
gas introduction means for introducing a gas in the form of bubbles into said liquid as said liquid is conducted along said flow path to thereby effect transfer of substances between said gas and said liquid, said gas introduction means being arranged about the periphery of said narrow annular gap so as to uniformly introduce gas bubbles along the entire periphery of said annular gap into said liquid as said liquid is conducted through said narrow annular gap; and
removal means along said flow path downstream of said narrow annular gap for removing excess gas from said liquid together with any substances transferred from said liquid to said gas.

4,374,089

CHROMATOGRAPHIC ACCESSORY INCORPORATING INJECTION SWITCH ASSEMBLY

Kumiy R. Iwao, Lafayette, and James V. Lovie, Chester, both of Calif., assignors to Varian Associates, Inc., Palo Alto, Calif. Continuation of Ser. No. 154,188, May 29, 1980, abandoned. This application Jan. 21, 1982, Ser. No. 341,396

Int. Cl.³ G01N *1/18, 31/06;* **B01L** *11/00*

U.S. Cl. 422—70 **2 Claims**

1. A chromatographic assembly comprising in combination:
a chromatographic column;
a nut having an axial bore therethrough for accommodating the needle of a sample syringe, said nut having at least three indentations on the exterior thereof which are parallel to said axial bore and which are positioned in equally spaced apart positions around the circumference of said exterior of said nut, said nut being attached to the end of said chromatographic column;
a sheath-like moveable member which is fit around the exterior of said nut, and slides over said nut in the axial direction, the sheath-like moveable member being structured and positioned such that it is prevented from rotational movement with respect to said nut by riding in said at least three identations, said sheath-like moveable member being able to travel between a ready position wherein said sheath-like moveable member has a portion thereof extending above the upper surface of said nut and a depressed position wherein said sheath-like moveable member has been depressed with respect to said upper surface of said nut, said sheath-like moveable member having an opening in its upper surface concen-

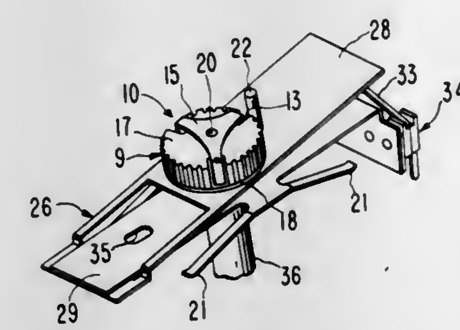

tric with said axial bore through said nut to permit the passage of said needle therethrough;
a microswitch electrically connected to monitoring or detection equipment for monitoring or detecting sample separation in said chromatograph column, said microswitch being positioned so as to be contacted by said moveable member when it reaches said depressed position; and
bias means engaging the bottom of said moveable member to thereby place said moveable member under tension whereby said moveable member is biased towards said ready position and whereby the depression of said moveable member by said sample syringe works against said tension produced by said bias means and forces said moveable member to contact said microswitch to initiate operation of said monitoring or detection equipment.

4,374,090

CHEMICAL BIAS AGENT DETECTION

B. Thompson McClure, Hopkins, Minn., assignor to Honeywell Inc., Minneapolis, Minn.

Filed Jul. 6, 1981, Ser. No. 280,438

Int. Cl.³ G01N *27/66, 27/70*

U.S. Cl. 422—98 **5 Claims**

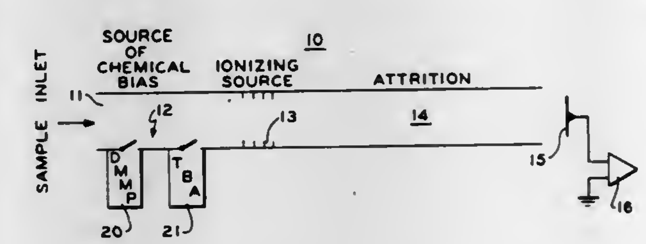

1. An ionization type chemical agent detector with a chemical bias comprising:
a housing having an inlet and an outlet for passage of gas samples;
means defining a source of a chemical bias agent selected from the group consisting of dimethylmethyl phosphonate, dissopropylmethyl phosphonate, di-N-butylamine, tributylamine and dimethyl sulfoxide connected to the housing to add said bias chemical to the incoming gas samples;
means defining a source of ionization mounted in the housing to ionize said incoming gas samples;
means defining an attrition region in said housing downstream from said source of ionization;
and a collector electrode mounted near said housing outlet for generating an electric signal which is a function of ions present in the gas sample after passing through said attrition region.

4,374,091

GAS GENERATORS HAVING CONTROLLED OPERATIONAL ATTITUDES

Edward H. Reiss, Jr., Little Silver, N.J., assignor to The United States of America as represented by the Secretary of the Army, Washington, D.C.

Filed Aug. 14, 1981, Ser. No. 293,415

Int. Cl.³ G05D *7/00;* **B01J** *7/00, 4/00*

U.S. Cl. 422—114 **6 Claims**

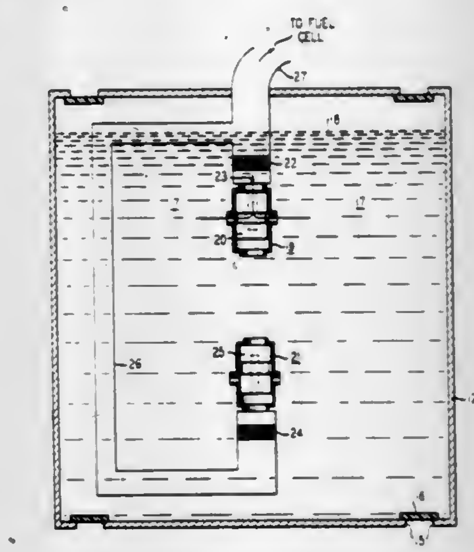

1. Apparatus for producing a gas comprising:
a storage chamber;
a first liquid chemical means contained in said storage chamber for aiding in the production of a desired gas;
valve means operatively connected to said storage chamber including means sensitive to the orientation of said valve with respect to the gravitational field in which it is placed for allowing said first liquid chemical means to pass through said valve means only when said gravitational sensing means indicates a desired range of orientation with respect to said gravitational field;
a reaction chamber connected to said valve means at the outflow end thereof; and,
a second chemical means contained in said reaction chamber for reacting with said first chemical means to produce said desired gas.

4,374,092

SYSTEM FOR ELECTRICALLY HEATING AND REGENERATING SPENT ACTIVATED CARBON

Gerald E. Marquess, 100 Hudson St., New York, N.Y. 10013, and David J. Nell, Lotus Ave., Oradell, N.J. 07649

Filed Jul. 9, 1981, Ser. No. 281,691

Int. Cl.³ B01J *4/00, 8/12, 20/34*

U.S. Cl. 422—199 **2 Claims**

1. A system for reactivating a spent activated carbon material and the like comprising solid-liquid separator, a surge bin for receiving the output of the separator, a continuous feed electrically heated furnace for receiving material from the surge bin,
said solid-liquid separator comprising means for passing fluids and retaining solid materials, means for gating the material to said surge bin,
said surge bin arranged to receive the output of said solid-liquid separator and to continuously feed it to the electrically heated furnace,
said electrically heated furnace being an elongate column with baffles therein for channeling the flow of carbon

material centrally of the column through which the material flows, electrical resistance heating elements outside the flow of carbon material and positioned near the walls and inside of the furnace for radiation and convection heating of said material, controllable means for discharging materials at the bottom of the furnace, said furnace

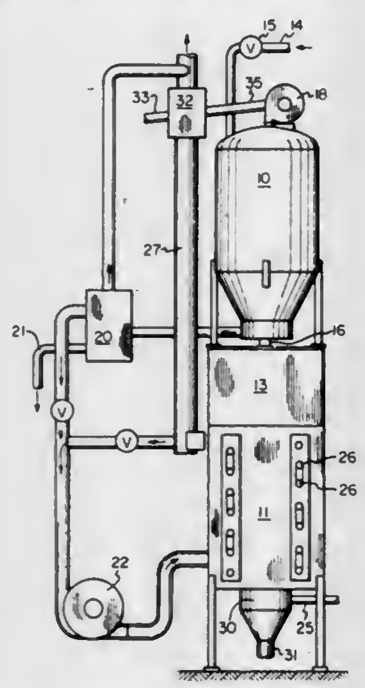

having an exhaust outlet near its upper end and a treatment gas inlet near its lower end,
whereby the amount of energy required for reactivation of the spent activated carbon material is reduced and the amount of loss due to abrasion and excessive oxidation is also reduced.

4,374,093
CONTINUOUS-STREAM UPFLOW ZEOLITE CRYSTALLIZATION APPARATUS
Louis D. Rollmann, Princeton, N.J., and Ernest W. Valyocsik, Yardley, Pa., assignors to Mobil Oil Corporation, New York, N.Y.
Continuation-in-part of Ser. No. 236,090, Feb. 20, 1981, abandoned, which is a continuation of Ser. No. 47,536, Jun. 11, 1979, abandoned. This application Aug. 26, 1981, Ser. No. 296,600
Int. Cl.³ B01D *9/02*
U.S. Cl. 422—202 11 Claims

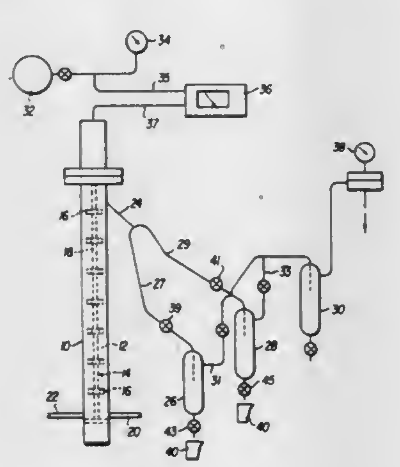

1. An apparatus for preparing crystalline zeolite materials on a continuous stream basis comprising
a substantially vertically-oriented reactor means,
a stirring means inside said reactor means, said stirring means being operatively associated with said reactor means and comprising an elongated rod means having a plurality of blades angularly disposed about said rod means,
said stirring means extending substantially throughout the entire length of said reactor means,
a first and a second reactants entrance means in the lower portion of said reactor means,
said first reactants entrance means being positioned on the opposite side of said reactor means than said second reactants entrance means,
said first reactants entrance means continuously conveying a source of silica into said reactor means,
said second reactants entrance means continuously conveying a source of alumina ions into said reactor means,
at least one product exit means in the upper portion of said reactor means for continuously removing crystalline zeolite product from said reactor means,
a multitude of baffle means on the inside surface of said reactor means, said baffle means being disposed angularly with respect to said inside surface of said reactor means and being spaced in such a manner that said baffle means are interspaced in-between said blades of said stirring means,
said angularly disposed blades, said baffle means and said first and second reactants entrance means positioned on the opposite sides of said reactor means cooperating in advancing the reactants upwardly and preventing plugging of the first and second reactants entrance means by the crystalline zeolite materials,
a heating means surrounding said reactor means, and
a pressurizing means for pressurizing said reactor means with an inert gas.

4,374,094
METHOD AND APPARATUS FOR UNIFORM FLOW THROUGH RADIAL REACTOR CENTERPIPES
Robert A. Farnham, San Rafael, Calif., assignor to Chevron Research Company, San Francisco, Calif.
Filed Oct. 29, 1981, Ser. No. 316,522
Int. Cl.³ B01J *8/02, 35/02*
U.S. Cl. 422—218 7 Claims

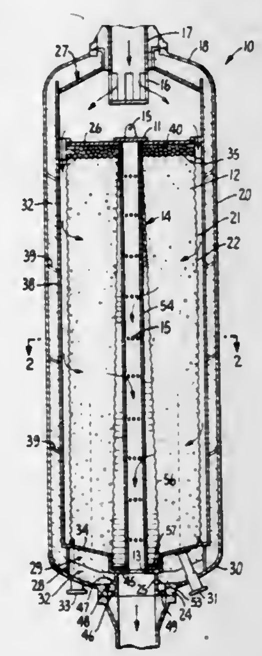

1. A method of preventing longitudinal displacement of the centerpipe of a radial flow catalytic reactor vessel due to thermal cycling of fluids flowing therethrough and differences in thermal expansion of said centerpipe with uniform permeability of radial flow for reactant fluids through the catalyst bed along the length of said centerpipe which comprises
positioning a centerpipe centralizing socket member in the lower end wall of said vessel, seating a centerpipe in said socket member sufficiently deep to maintain said centerpipe in a vertical position extending axially parallel to a substantial portion of the sidewall of said vessel,
said centerpipe being formed throughout its length as a screen member having frustoconical shape whose diameter decreases from said socket member toward the upper end wall of said vessel, said screen member having uniformly spaced openings throughout its circumferential surface over said length,
enclosing said screen member of said centerpipe within a generally cylindrical body of catalyst particles extending radially outward from said centerpipe to a location adjacent to said vessel sidewall, and
forming vertical passageways between said sidewall of said vessel and said body of catalyst particles to permit radial flow of reactant fluids through said body between said wall and said centerpipe so that the permeability to fluid flow across said body of such radial flow is substantially uniform throughout the length of said frustoconical centerpipe and thermal cycling is resisted by the gravity component of said cylindrical catalyst bed along the length of said frustoconical centerpipe.

2. In a radial flow reactor vessel having inlet and outlet passageways, means for retaining a generally cylindrical bed of catalyst particles extending through said reactor and so arranged as to permit radial fluid flow between the center of said bed and the peripheral area of said cylindrical bed, a perforated centerpipe member extending through said catalyst bed, said reactor having a sealable access opening in the upper end of said vessel for installation and removal of said catalyst particles, said perforated centerpipe member, and said retaining means, the improvement comprising
a centerpipe seat member mounted at the lower end of said vessel in fluid communication with said outlet passageway,
a centerpipe having one end formed to frictionally engage said seat member for support thereof coaxially with said reactor vessel, and having a diameter which is tapered inwardly from said seat end to the other end thereof to increase the radial distance for fluid flow through said cylindrical catalyst bed from said one end to said other end of said centerpipe,
a catalyst engaging surface of said centerpipe being formed as a tapered screen member having substantially uniform permeability to fluid flow throughout the length of said centerpipe from said seat and to the enclosed upper end thereof.

4,374,095
METHOD AND APPARATUS FOR RESTRAINING RADIAL FLOW CATALYTIC REACTOR CENTERPIPES
Douglas J. Legg, Portola Valley, and Ben G. Burke, Lafayette, both of Calif., assignors to Chevron Research Company, San Francisco, Calif.
Filed Oct. 29, 1981, Ser. No. 316,547
Int. Cl.³ B01J *8/02, 35/02*
U.S. Cl. 422—218 6 Claims

1. A method of preventing longitudinal displacement of the centerpipe of a radial flow catalytic reactor vessel due to thermal cycling of fluids flowing therethrough and differences in thermal expansion of said centerpipe and for increasing the volume thereof for increasing radial flow of reactant fluids through the catalyst bed along the length of said centerpipe which comprises
positioning a centerpipe centralizing socket member in the lower end wall of said vessel,
seating a centerpipe in said socket member extending axially parallel to a substantial portion of the sidewall of said vessel,
said centerpipe being formed throughout its length as a frustoconical section whose diameter decreases from said socket member toward the upper end wall of said vessel and having a plurality of spaced openings throughout said length,
covering at least said openings of said centerpipe with screen,
enclosing said centerpipe within a generally cylindrical body of catalyst particles extending radially outward from said centerpipe adjacent to said vessel sidewall, and
forming vertical passageways between said sidewall of said vessel and said body of catalyst particles to permit radial flow of reactant fluids through said body between said sidewall and said centerpipe, whereby increasing fluid flow into said centerpipe from across said body by radial flow therethrough is accommodated along the length of said frustoconical centerpipe and thermal cycling is resisted by the gravity component of said cylindrical catalyst bed along the surface of said frustoconical centerpipe.

2. In a radial flow reactor vessel having inlet and outlet passageways, means for retaining a generally cylindrical bed of catalyst particles extending through said reactor and so arranged as to permit radial fluid flow between the peripheral area of said cylindrical bed and the center of said bed, a perforated centerpipe member extending through said catalyst bed, said reactor having a sealable across opening in the upper end of said vessel for installation and removal of said catalyst particles, said perforated centerpipe member, and said retaining means, the improvement comprising

a centerpipe seat member mounted at the lower end of said vessel,
said centerpipe having one end formed to engage said seat member for support thereof and the diameter of said centerpipe being tapered inwardly from above said seat to the other end thereof;
screen means surrounding said centerpipe adapted to prevent catalyst particles from passing through the perforations in said centerpipe and means covering at least a portion of the upper end of said centerpipe to maintain the perforations of said centerpipe within said cylindrical bed of said catalyst particles.

4,374,096
URANIUM ORE PROCESSING
James M. Skeaff; Gordon M. Ritcey; Kazi E. Haque, all of Ottawa, and Bernard H. Lucas, Nepean, all of Canada, assignors to Canadian Patents & Development Limited, Ottawa, Canada
Filed Aug. 1, 1979, Ser. No. 62,801
Int. Cl.³ C01G *43/00;* **C01F** *15/00;* **C01G** *28/00, 49/00*
U.S. Cl. 423—9 17 Claims

1. A method of recovering separately uranium, thorium, and radium, from solids comprising ores, concentrates, calcines or tailings containing these metals, comprising:
(1) leaching in at least one stage, said U, Th and Ra-bearing solids in finely divided form with aqueous acidic leachant containing at least one of HCl and Cl_2, the leach conditions and stages being selected to cause high proportions of the uranium, thorium and radium to be dissolved;

(2) separating the aqueous leach solution from the solid residue and disposing of the residue;
(3) recovering uranium from the solution by solvent extraction and precipitation steps;
(4) when economic, recovering thorium from the solution by solvent extraction and precipitation;

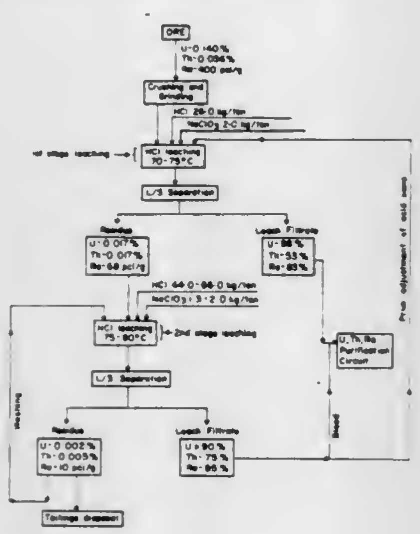

(5) recovering radium from the solution by at least one of ion exchange, adsorption, and precipitation, and disposing of the radium;
(6) when iron is present in the leach solution controlling the amount of iron in the solution to avoid any iron build-up therein, and
(7) recycling the resulting depleted chloride solution to step (1).

4,374,097
METHOD FOR RECOVERING PRECIOUS METALS
Larry D. Holland, Dallas, Tex., assignor to NEHA International, Dallas, Tex.
Filed Apr. 16, 1981, Ser. No. 254,888
Int. Cl.³ C01G *55/00;* C22B *3/00*
U.S. Cl. 423—22 2 Claims

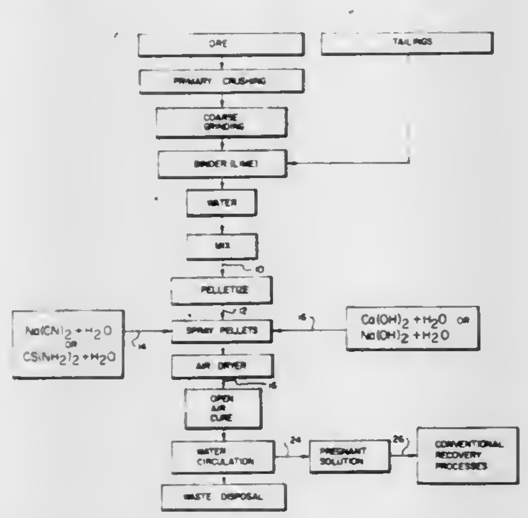

1. A method for recovering precious metal values from ores comprising the steps:
producing a paste of particulated ore and a binding agent;
extruding the paste to form pellets;
coating the pellets with a lixiviant solution;
drying the lixiviant coated pellets; and,
spraying the dried pellets with water to yield a pregnant solution of a precious metal salt.

4,374,098
METHOD OF CONCENTRATING SILVER FROM ANODE SLIME
Toshimasa Iio, and Toyokazu Ohkubo, both of Niihama, Japan, assignors to Sumitomo Metal Mining Co., Ltd., Tokyo, Japan
Filed Jun. 16, 1982, Ser. No. 388,986
Claims priority, application Japan, Jun. 22, 1981, 56-96215
Int. Cl.³ C01G *21/20*
U.S. Cl. 423—27 4 Claims

1. A method of concentrating the silver in an intermediate product obtained by the treatment of anode slime generated during electrolytic copper refining, the intermediate product containing lead in sulfate form and silver in chloride form, the method comprising:
(a) reacting the intermediate product with an aqueous solution containing a compound selected from the group consisting of alkali metal hydroxides and carbonates wherein the amount of alkali metal added is in at least the stoichiometric amount up to 1.2 times the stoichiometric amount with respect to lead to form a reaction product;
(b) subjecting the reaction product obtained in step (a) to solid-liquid separation; and
(c) reacting the residue obtained in step (b) with a nitric acid solution, whereby the lead therein is separated into a filtrate, while the silver remains in the residue.

4,374,099
RECOVERY OF TUNGSTEN VALUES FROM ALKALI TUNGSTATE SOLUTIONS BY SOLVENT EXTRACTION
Tai K. Kim; Martin B. MacInnis, both of Towanda; Robert P. McClintic, and Martin C. Vogt, both of Monroeton, all of Pa., assignors to GTE Products Corporation, Stamford, Conn.
Filed Aug. 13, 1981, Ser. No. 292,377
Int. Cl.³ C01G *41/00*
U.S. Cl. 423—54 2 Claims

1. A process for producing ammonium tungstate from an aqueous alkali metal tungstate solution containing impurities comprising the steps of: (a) extracting said tungsten values into an organic extractant by contacting said aqueous alkali metal tungstate solution with said organic extractant for a sufficient period of time to form a loaded organic extractant containing tungsten values and an aqueous solution, said organic extractant consisting essentially of from about 6 to about 10 percent by volume of a mixture of tri-alkyl amines having alkyl chains of about 6 to 10 carbon atoms with trisooctyl amine being the major component in said mixture and from 90 to 94 percent by volume of an aromatic solvent consisting essentially of a mixture of alkyl benzenes wherein the alkyl benzenes constituting the mixture of alkyl benzenes have molecular weights of 120, 134, 148 and the total number of atoms in the alkyl chains attached to the benzene ring are either 3, 4, or 5; (b) separating said loaded organic extractant from said aqueous solution containing a portion of said impurities; (c) stripping said loaded organic extractant from step (b) by contacting with an aqueous ammonia solution at a volume ratio of said aqueous ammonia to said loaded organic extractant of from about 7 to one to about 3.5 to one to form an aqueous ammonium tungstate solution and a stripped organic extractant, said aqueous ammonia solution consist essentially of water and from 5 to about 21 percent by weight ammonium hydroxide at a pH of from about 12 to about 13, said contacting being carried out by dispersing said aqueous ammonia solution in said loaded organic extractant whereby a dispersed aqueous phase is formed in an organic continuous phase of organic extractant, (d) separating said aqueous ammonium tungstate from said stripped organic extractant; and (e) feeding a portion of said stripped organic extractant to step (a) for use as said organic extractant and feeding another portion of said stripped organic extractant to step (c) as organic phase for maintaining said volume ratio.

4,374,100
RECOVERY AND RECYCLE OF MOLYBDENUM VALUES FROM COAL LIQUEFACTION RESIDUE
Roger F. Sebenik; Calvin J. Hallada; Henry F. Barry, and George A. Tsigdinos, all of Ann Arbor, Mich., assignors to Amax Inc., Greenwich, Conn.
Continuation of Ser. No. 243,157, Mar. 18, 1981, abandoned. This application Jun. 30, 1982, Ser. No. 393,987
Int. Cl.³ C01G *39/00*
U.S. Cl. 423—56 13 Claims

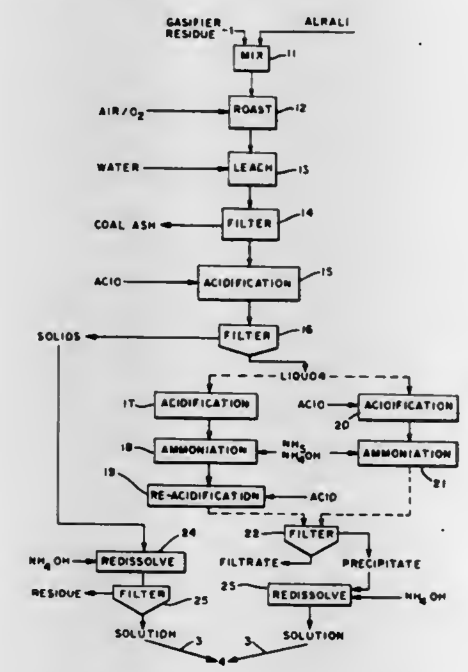

1. A process for treating a solid, glassy coal liquefaction residue containing molybdenum values entrapped therein, to recover molybdenum values therefrom, comprising
(a) intimately mixing the residue with an amount of alkali equivalent to about 6 to about 10 times the stoichiometric amount required for conversion of the molybdenum in the residue to water-soluble molybdate,
(b) roasting the mixture produced in step (a) under conditions which are oxidizing as to the molybdenum, to convert molybdenum in the residue to water-soluble molybdate,
(c) leaching the roasted product of step (b) with water to form a leach liquor containing molybdenum values dissolved therein and having a pH value above about 10.5,
(d) then filtering the leach liquor from the leach residue,
(e) lowering the pH value of the filtered leach liquor to a value between about 6 and about 10.5 to precipitate impurities and a minor portion of the molybdenum values, and to form a purified leach liquor,
(f) separating the precipitate from the purified leach liquor, whereby the precipitate can be treated to separate impurities from the molybdenum values,
(g) acidifying and then ammoniating the purified leach liquor from step (f) to precipitate an ammonium-polymolybdate complex, and
(h) recovering said ammonium-polymolybdate complex from the purified leach liquor.

4,374,101
CHEMICAL DISSOLUTION OF SCALE FORMED DURING PRESSURE LEACHING OF NICKELIFEROUS OXIDE AND SILICATE ORES
Guy W. Lussiez, Golden, and Mahesh C. Jha, Arvada, both of Colo., assignors to Amax Inc., Greenwich, Conn.
Filed Jun. 21, 1982, Ser. No. 390,441
Int. Cl.³ C01G *53/00;* C23F *14/02*
U.S. Cl. 423—150 4 Claims

1. In a method for the sulfuric acid leaching of nickeliferous oxide and silicate ore, containing in addition to nickel, oxides and silicates of aluminum, iron and magnesium, wherein during high pressure leaching of nickeliferous oxide feed material in an autoclave at a temperature in the range of about 180° C. to 300° C., there is a tendency for the formation of scale on autoclave surfaces, the scale containing oxides and sulfates of metals selected from the group consisting of aluminum, silicon, iron and magnesium, the improvement which comprises,

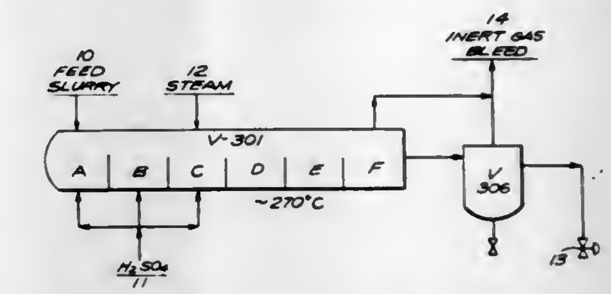

flushing said autoclave following completion of a leaching regime with a sulfuric acid solution containing about 20 to 100 gpl H_2SO_4 at a temperature of about 150° C. to 250° C. and a pressure ranging from about 54 psig to 562 psig for a time at least sufficient to effect substantial removal of said scale.

4,374,102
POLYMERS FOR CONTROLLING SODA ASH CRYSTAL FORMATION
Lawrence J. Connelly, Oak Lawn, Ill.; James Kane, Sandy, Utah, and R. James Shields, Warrenville, Ill., assignors to Nalco Chemical Company, Oak Brook, Ill.
Filed Nov. 13, 1981, Ser. No. 321,288
Int. Cl.³ C01D *7/00, 7/40*
U.S. Cl. 423—206 T 5 Claims

1. An improved process for crystallizing clarified aqueous trona solutions which comprises adding to these solutions prior to crystallization at least 3 ppm of a poly N,N-dimethylaminomethyl acrylamide.

4,374,103
METHOD OF USING A LOW COST CATALYST SYSTEM
Haren S. Gandhi, Farmington Hills, and Karen M. Adams, Dearborn Heights, both of Mich., assignors to Ford Motor Company, Dearborn, Mich.
Filed Jul. 20, 1981, Ser. No. 284,762
Int. Cl.³ B01D *53/36*
U.S. Cl. 423—213.5 17 Claims

1. In a process for treatment of exhaust gases from an internal combustion engine, the steps of:
burning a hydrocarbon fuel or a fuel containing hydrocarbons and alcohol blends in the internal combustion engine thereby to generate exhaust gases from the internal combustion engine containing various amounts of unburned hydrocarbons, carbon monoxide and oxides of nitrogen depending upon operating conditions of the internal combustion engine; and
passing said generated exhaust gases over an improved catalyst comprising:
a support medium for supporting a catalyst system, said support medium having both an upstream support portion over which exhaust gases initially flow and a downstream

support portion over which exhaust gases flow after passing over said upstream support portion thereof;
palladium on said upstream support portion;
palladium on said downstream support portion; and
finely divided tungsten on said downstream support portion, said tungsten being present on said downstream support portion in quantities that tungsten is available to substantially of said palladium on said downstream support portion so that said palladium/tungsten combination is effective in the catalytic oxidation of unburned hydrocarbons and carbon monoxide and the catalytic reduction of oxides of nitrogen without significant production of ammonia when the internal combustion engine is operating under fuel rich conditions.

4,374,104
COMPOSITION AND METHOD FOR REMOVING HYDROGEN SULFIDE FROM GAS STREAM
Harold S. Primack, Skokie, Ill., assignor to Air Resources, Inc., Palatine, Ill.
Filed Sep. 30, 1980, Ser. No. 192,559
Int. Cl.³ C01B *17/04*
U.S. Cl. 423—226 **25 Claims**

1. A catalytic oxidation-reduction composition for oxidizing hydrogen sulfide to form elemental sulfur in an aqueous alkaline reaction solution comprising an aqueous solution containing a chelated water soluble polyvalent metal catalyst having the metal in its higher valence state and containing at least one water soluble surfactant stable in said alkaline solution which is adapted to wet said elemental sulfur formed in said reaction solution and effect settling sulfur from said solution, and said surfactant being present in the aqueous solution in an amount sufficient to prevent the formation of a layer of sulfur froth on the surface of said reaction solution while maintaining the sulfur concentration in said reaction solution between about 0.1 wt. % and 10 wt. %.

4,374,105
PURIFICATION OF FUEL GASES
Gerald L. Anderson, Romeoville; Harley A. Borders, Berwyn, and Maria R. Aquino, Lockport, all of Ill., assignors to Institute of Gas Technology, Chicago, Ill.
Filed Dec. 11, 1979, Ser. No. 102,339
Int. Cl.³ B01D *53/36*
U.S. Cl. 423—230 **19 Claims**

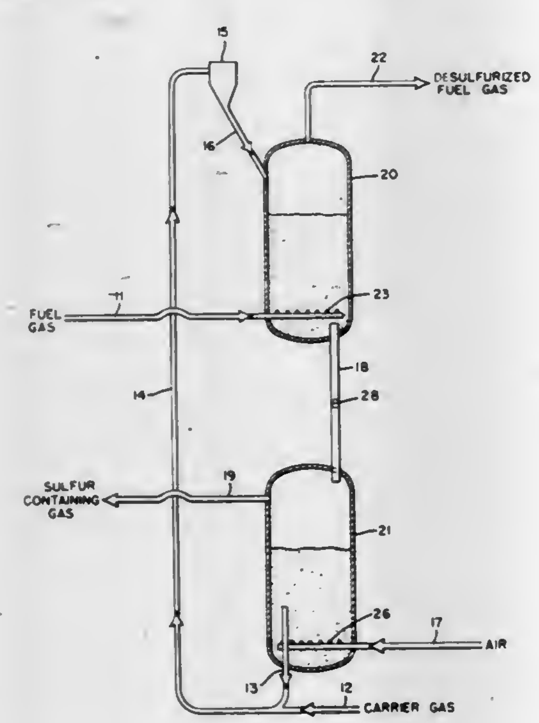

1. A process for substantial removal of ammonia from reducing gas streams comprising: contacting said reducing gas stream with solid zinc oxide (ZnO) in a reaction zone at temperatures of about 400° to about 1400° F.; decomposing said ammonia in said reducing gas in contact with said solid zinc oxide producing an equilibrium mixture of ammonia, hydrogen and nitrogen.

4,374,106
PROCESS FOR REDUCING THE HYDROGEN SULFIDE CONTENT IN GEOTHERMAL STEAM
Ann B. Tipton, Diamond Bar, and Alan C. Crosby, Tustin, both of Calif., assignors to Occidental Research Corporation, Irvine, Calif.
Continuation of Ser. No. 294,631, Aug. 20, 1981, abandoned. This application Apr. 30, 1982, Ser. No. 373,317
Int. Cl.³ B01D *53/34*
U.S. Cl. 423—231 **17 Claims**

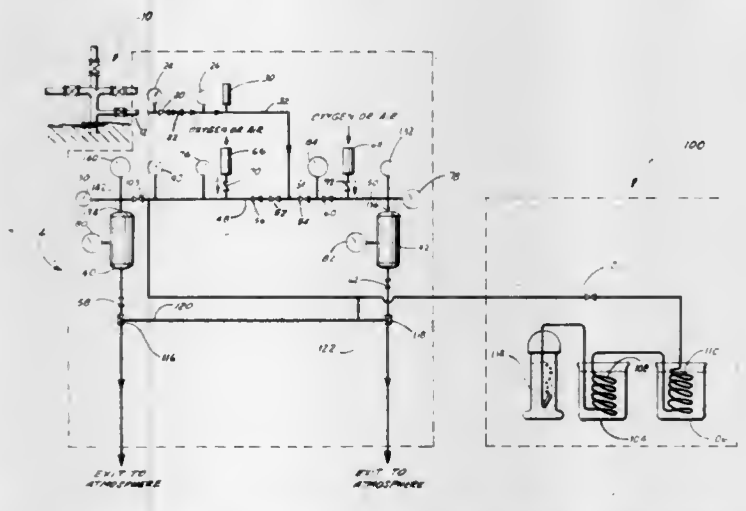

1. A process for removing hydrogen sulfide from geothermal steam comprising the steps of:
introducing an oxygen-containing gas into steam produced by a geothermal source, said steam comprising water vapor and hydrogen sulfide and having a temperature of at least about 300° F.; said oxygen-containing gas being introduced into said steam in an amount to provide a molar ratio of oxygen-to-hydrogen sulfide in the steam and oxygen-containing gas to be at least about 10; and,
contacting the steam and oxygen containing gas in a contacting stage with iron oxide supported by a carrier resistant to deterioration by said steam under conditions sufficient to remove hydrogen sulfide from said steam and oxygen containing gas.

4,374,107
METHOD FOR DRYING ISOCYANIC ACID
Steven L. Trenbeath, Fairfield; Robert W. Novak, Stamford, and Allan M. Feldman, Norwalk, all of Conn., assignors to American Cyanamid Company, Stamford, Conn.
Filed Sep. 23, 1981, Ser. No. 304,758
Int. Cl.³ C01C *3/00, 3/14*
U.S. Cl. 423—265 **12 Claims**

1. A process for removing water from wet isocyanic acid which comprises forming a solution of isocyanic acid containing water in an organic solvent therefor, and adding to said solution a drying agent selected from the group consisting of hydrogen halides and compounds which form a hydrogen halide in said solution, said drying agent being added in an amount sufficient to provide said hydrogen halide in molar excess of the water present.

4,374,108
PROCESS OF PREPARING ALKALI MONOFLUOROPHOSPHATE
Yasuji Nakaso; Kyoji Tanaka, both of Ube, and Hiromi Kawamoto; Onoda, all of Japan, assignors to Central Glass Company, Limited, Yamaguchi, Japan
Filed Nov. 20, 1980, Ser. No. 208,685
Claims priority, application Japan, Nov. 22, 1979, 54-150757
Int. Cl.³ C01B *25/10*
U.S. Cl. 423—301 **6 Claims**

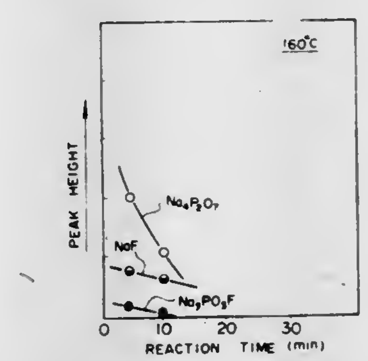

1. A process for the preparation of an alkali monofluorophosphate expressed by the formula M_2PO_3F, where M represents Na or K, by a process comprising reacting hydrogen fluoride gas with an alkali phosphate selected from the group consisting of sodium pyrophosphate, potassium pyrophosphate, disodium hydrogenphosphate and dipotassium hydrogenphosphate, the steps of the process comprising: placing said alkali phosphate in a finely divided solid form in a reaction vessel and contacting with the hydrogen fluoride gas by continuously flowing the hydrogen fluoride gas into and through said vessel until the total quantity of hydrogen fluoride gas flowed into said vessel amounts to 100 to 150% of the theoretical value for conversion of said alkali phosphate to M_2PO_3F, while maintaining the temperature of the reaction in the range of from about 200° C. to about 450° C.

4,374,109
MANUFACTURE OF PHOSPHOSIDERITE IRON PHOSPHATE
Ferdinand A. Ruszala; James T. Hoggins, both of Columbus, and Stephen S. Hupp, Dublin, all of Ohio, assignors to Ashland Oil, Inc., Ashland, Ky.
Filed Dec. 17, 1981, Ser. No. 331,945
Int. Cl.³ C01B *15/16, 25/26*
U.S. Cl. 423—311 **4 Claims**

1. A method for preparing phosphosiderite ($FePO_4.2H_2O$) comprising treating a Malten mixture of $Fe(NO_3)_3.9H_2O$ and H_3PO_4 with a phosphosiderite seed material at a temperature in the range of from 75° to 200° C. for a period of time thus causing the precipitation of phosphosiderite product and recovering the product.

4,374,110
PURIFICATION OF SILICON SOURCE MATERIALS
Robert D. Darnell, and William M. Ingle, both of Phoenix, Ariz., assignors to Motorola, Inc., Schaumburg, Ill.
Filed Jun. 15, 1981, Ser. No. 273,519
Int. Cl.³ C01B *33/107*
U.S. Cl. 423—342 **4 Claims**

1. A process for removing BCl_3 and/or PCl_3 impurities from a silicon source material including trichlorosilane which comprises the steps of:
heating said material in gaseous form to a temperature of about 170° C. to about 300° C. with oxygen to effect formation of boron and/or phosphorous containing siloxane complexes; and
distilling to remove said siloxane complexes from said source material.

4,374,111
PRODUCTION OF SILANE
Philip A. Lefrancois, Cranford, N.J., assignor to Allied Corporation, Morris Township, Morris County, N.J.
Filed Nov. 21, 1980, Ser. No. 208,978
Int. Cl.³ C01B *33/04*
U.S. Cl. 423—347 **13 Claims**

1. A process which comprises reacting a silicon halide with an agitated slurry of an alkali metal hydride in a liquid comprising at least about 50% by weight of a diaryl ether at a temperature between about 225° C. and the boiling point of the diaryl ether at the reaction pressure to effect formation of silane and the corresponding alkali metal halide.

4,374,112
STABLE NF_4^+ SALT OF HIGH FLUORINE CONTENT
Karl O. Christe, Calabasas, and William W. Wilson, Canoga Park, both of Calif., assignors to The United States of America as represented by the Secretary of the Army, Washington, D.C.
Filed Dec. 22, 1980, Ser. No. 219,056
Int. Cl.³ C01B *21/00;* **C01G** *45/00*
U.S. Cl. 423—351 **1 Claim**

1. The salt having the formula: $(NF_4)_2MnF_6$, and characterized by having good thermal stability in storage.

4,374,113
PRODUCTION OF HIGH SURFACE AREA CARBON BLACKS
Barrie J. Yates, Andover, Mass., and Ronald C. Hurst, Pampa, Tex., assignors to Cabot Corporation, Boston, Mass.
Division of Ser. No. 62,727, Aug. 1, 1979, Pat. No. 4,283,378. This application Apr. 30, 1981, Ser. No. 259,079
Int. Cl.³ C01B *31/00, 31/02*
U.S. Cl. 423—445 **11 Claims**

1. A furnace-type carbon black product characterized by having an iodine surface area of at least 600 m^2/g, a pH value of less than 5 and a DBP value of at least 160 cc/100 g.

4,374,114
PROCESS FOR THE SURFACE MODIFICATION OF CARBON FIBERS
Sang N. Kim, Randolph Township, Morris County; Paul E. McMahon, North Plainfield; John P. Riggs, New Providence, and John M. Rhodes, Summit, all of N.J., assignors to Celanese Corporation, New York, N.Y.
Filed Jan. 5, 1981, Ser. No. 222,790
Int. Cl.³ D01F *9/12*
U.S. Cl. 423—447.1 **27 Claims**

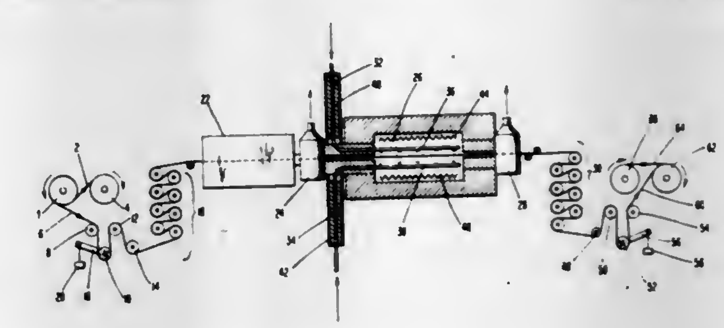

1. An improved process for the modification of the surface characteristics of a carbonaceous fibrous material containing at least 90 percent carbon by weight so as to improve its ability to bond to a resinous matrix material while retaining a substantial portion of the tensile strength thereof comprising:
(a) continuously feeding to a substantially enclosed surface treatment zone maintained at a temperature of approximately 300° to 800° C. a gaseous atmosphere comprising approximately 1 to 25 percent by volume nitrogen dioxide and approximately 75 to 99 percent by volume air,

(b) continuously passing a continuous length of said carbonaceous fibrous material in the direction of its length through said surface treatment zone for a residence time of approximately 20 to 180 seconds, and
(c) continuously withdrawing the resulting continuous length of carbonaceous fibrous material from said surface treatment zone.

4,374,115
MAKING CALCIUM HYPOCHLORITE FROM IMPURE LIME
Herman H. Tiedemann, Texas City, Tex., assignor to Chemetics International Ltd., North York, Canada
Filed Aug. 25, 1981, Ser. No. 296,155
Claims priority, application Canada, Sep. 2, 1980, 359437
Int. Cl.³ C01B *11/06*
U.S. Cl. 423—474 **2 Claims**

1. A process for making calcium hypochlorite comprising passing chlorine through an aqueous solution of alkali metal hydroxides containing suspended particles of calcium hydroxide, said alkali metal hydroxides consisting of sodium hydroxide and potassium hydroxide wherein the ratio of sodium hydroxide to potassium hydroxide in the aqueous solution is such that 75% to 99% of the alkali metal ions in said solution are sodium ions and 1% to 25% are potassium ions, and wherein the calcium hydroxide is less than 96% pure.

4,374,116
METHOD OF COMBINING GASEOUS HYDROGEN AND OXYGEN AND APPARATUS THEREFOR
Karl T. Chuang, Deep River, and Maurice F. Roett, Calgary, both of Canada, assignors to Atomic Energy of Canada Limited, Ottawa, Canada
Filed Jun. 9, 1981, Ser. No. 271,961
Claims priority, application Canada, Nov. 3, 1980, 363863
Int. Cl.³ C01B *5/00*
U.S. Cl. 423—580 **4 Claims**

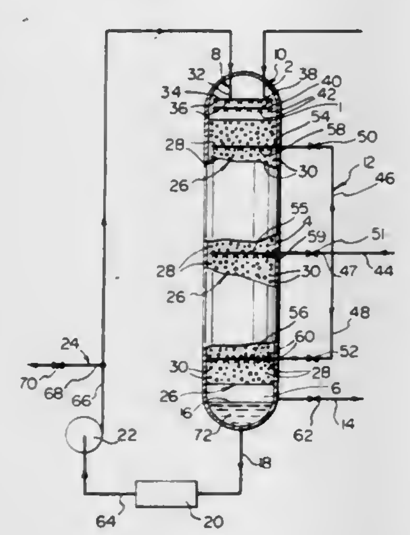

1. A method of combining gaseous hydrogen and oxygen comprising:
(a) distributing a flow of gaseous hydrogen in a catalytic assembly located in and substantially filling an intermediate portion of an upwardly extending casing,
(b) distributing a flow of cooling water, from a cooling water inlet to the casing, downwardly into the catalytic assembly from an upper portion of the casing,
(c) distributing gaseous oxygen in the upper portion of the casing,
(d) circulating draining water from a lower portion of the casing to the cooling water inlet, and
(e) removing a portion of the water from circulation, and wherein
(f) the catalyst assembly comprises at least one high surface area, inert, porous support with platinum particles embedded in the pores, and beneath the exterior thereof, and a polytetrafluoroethylene coating thereon over the platinum particles comprising about 0.1 to about 0.5 weight % of the total weight of support, platinum and polytetrafluoroethylene present in the catalyst assembly, and the polytetrafluoroethylene comprising about 2 to about 4 weight % of the total weight of support, platinum and polytetrafluoroethylene present in the catalyst assembly, so that:
(g) the catalyst does not rapidly lose its activity by contact with the cooling water and has a good conversion efficiency.

4,374,117
PREPARATION OF ULTRAFINE BAZRO₃
Ronald H. Arendt, Schenectady, N.Y., assignor to General Electric Company, Schenectady, N.Y.
Filed Nov. 12, 1981, Ser. No. 320,367
The portion of the term of this patent subsequent to Nov. 11, 1997, has been disclaimed.
Int. Cl.³ C01G *23/00*
U.S. Cl. 423—593 **3 Claims**

1. A process for producing $BaZrO_3$ powder consisting essentially of providing barium oxide in an amount ranging from about 10 mole % to about 50 mole % in excess of stoichiometric amount or precursor therefor, providing zirconium oxide in about stoichiometric amount or precursor therefor, providing an alkali metal hydroxide selected from the group consisting of sodium hydroxide, potassium hydroxide and mixtures thereof, forming a mixture of said barium oxide or precursor therefor, said zirconium oxide or precursor therefor and said hydroxide solvent, heating said mixture to a reaction temperature ranging from about 980K to about 1375K, said hydroxide solvent being molten at said reaction temperature and in molten form being a solvent for said barium oxide and said zirconium oxide, said hydroxide solvent being used in an amount of at least about 20% by weight of the total amount of said reactants and said hydroxide solvent, each said precursor decomposing completely at or below said reaction temperature to form said oxide and by-product gas, maintaining said reaction temperature dissolving and reacting barium oxide and zirconium oxide in said molten solvent and precipitating $BaZrO_3$ and recovering said precipitated $BaZrO_3$.

4,374,118
PROCESS FOR STABILIZING FERROMAGNETIC CHROMIUM DIOXIDE
Giampiero Basile, Alessandria; Giancarlo Boero, Asti; Emiliano M. Ceresa, Vigliano Biellese, and Franco Montino, Casale Monferrato, all of Italy, assignors to Montedison S.p.A., Milan, Italy
Continuation-in-part of Ser. No. 206,190, Nov. 12, 1980, abandoned. This application Nov. 5, 1981, Ser. No. 318,413
Claims priority, application Italy, Nov. 16, 1979, 27333A/79
Int. Cl.³ C01G *37/027*
U.S. Cl. 423—607 **5 Claims**

1. A process for stabilizing ferromagnetic chromium dioxide having before said stabilization:
(a) a coercive force $H_c \geqq$ about 400 Oersted;
(b) a maximum magnetic induction $B_m \geqq$ about 2500 gauss; and
(c) a residual magnetic induction $B_r \geqq$ about 1600 gauss

the process comprising subjecting said CrO_2 to a heat treatment at a temperature ranging between 300° and 390° C. in the presence of a stream of gas not exerting any oxidizing or reducing action on compounds of trivalent, tetravalent and hexavalent chromium, and selected from the group consisting of nitrogen and noble gases at a flow rate at least equal to 2.5 liters/hour/kg of CrO_2 and for a period of time ranging between 20 minutes and 15 hours.

4,374,119
PROCESS FOR THE PRODUCTION OF COARSE CRYSTALLINE ALUMINA
Bernhard Schepers, Bergheim, Fed. Rep. of Germany; Volker Nobbe, Neuhausen, Switzerland; Bernd Schröder, Cologne, Fed. Rep. of Germany; Werner Borer, Flurlingen, Switzerland, and Manfred Kullack, Bergheim, Fed. Rep. of Germany, assignors to Swiss Aluminium Ltd., Chippis, Switzerland
Filed Sep. 16, 1981, Ser. No. 302,555
Claims priority, application Switzerland, Sep. 23, 1980, 7126/80
Int. Cl.³ C01F *7/02*
U.S. Cl. 423—625 **12 Claims**

1. Process for the production from aluminum hydroxide of coarse crystalline alumina, α-Al_2O_3, with a mean crystallite diameter of $>10\mu$, which comprises mixing aluminum hydroxide and a mineralizer of compound type $x(BF_4)_n$, wherein x stands for NH_4 and metallic elements with a valence of 1 or 2, and n for the formal valence level of x, and subjecting said mixture to an elevated temperature treatment between 750° C. and a value lying above that required for the phase change to α-Al_2O_3 to convert said aluminum hydroxide to the α-Al_2O_3.

4,374,120
FLUORESCENCE SPECTROSCOPY ASSAY MEANS WITH FLUORESCENT CHELATE OF A LANTHANIDE
Erkki Soini, and Ilkka Hemmilä, both of Turku, Finland, assignors to Wallac Oy, Turku, Finland
Filed Mar. 7, 1980, Ser. No. 128,621
Claims priority, application Sweden, Mar. 8, 1979, 7902079
Int. Cl.³ G01N *21/33, 33/48, 33/52*
U.S. Cl. 436—546 **18 Claims**

1. In a method for the determination of a substance by means of fluorescence spectroscopy in which a fluorescence marker is coupled to the molecules of the substance, the fluorescence of the marker having a duration which substantially exceeds the duration of the fluorescence of possible noise sources and in which the substance is excited by means of a short pulse of radiation and the fluorescence thereby generated is detected when the fluorescence from the sources of noise has in principle ceased, the improvement comprising using as said fluorescent marker a 1:1:1 fluorescent chelate of europium or terbium, β-diketone or a dihydroxy compound, and an aminopolycarboxylic acid analogue, said chelate having a stability constant above 10^{10} wherein
(a) the europium or terbium is the fluorescence emission source and is chelated to the aminopolycarboxylic acid analogue,
(b) the aminopolycarboxylic acid analogue has a functional group for covalent binding to said substance, and
(c) said β-diketone or said dihydroxy compound excites fluorescence of said fluorescence emission source.

4,374,121
MACROMOLECULAR BIOLOGICALLY ACTIVE COLLAGEN ARTICLES
Gheorghe Cioca, Belleville, N.J., assignor to Seton Company, Newark, N.J.
Continuation-in-part of Ser. No. 74,738, Sep. 12, 1979, Pat. No. 4,279,812. This application Sep. 24, 1980, Ser. No. 190,372
Int. Cl.³ C07G *7/00*
U.S. Cl. 424—19 **5 Claims**

1. A process of preparing macromolecular reconstituted collagen fiber comprising:
(a) treating natural insoluble collagen with an aqueous solution comprised of 0.5 to 1 molar of an alkali sulfate salt and 1.0 to 2.5 molar of an alkali metal hydroxide for at least 48 hours and up to 96 hours to saponify fats suspended within the natural insoluble collagen and to uniformly swell the collagen fibers;
(b) treating the fat free collagen with an aqueous solution comprised of an alkali metal sulfate for at least four hours to stabilize the interfibular bonds;
(c) dissolving the collagen in an aqueous solution;
(d) adding an effective amount of a biologically active substance to said solution;
(e) freezing said solution to effect a temperature reduction rate of −18° C. to −24° C./hour to a temperature of −60° C. to −70° C.; and
(f) vacuum drying said solution at 10^{-3} to 10^{-5} torr for at least 12 hours.

4,374,122
METHOD OF REDUCING DENTAL CARIES
John J. Stroz, Monroe, Conn., and Donald A. M. Mackay, Pleasantville, N.Y., assignors to Nabisco Brands, Inc., New York, N.Y.
Filed Mar. 27, 1981, Ser. No. 248,088
Int. Cl.³ A61K *7/16, 9/68*
U.S. Cl. 424—48 **9 Claims**

1. A method of treating teeth to reduce or prevent caries by inhibiting growth of *Steptococcus Mutans* in the presence of fermentable carbohydrates in the oral cavity, which comprises contacting the teeth with an anti-caries compound comprising 3,4-dihydro-6-methyl-1,2,3-oxathiazine-4-one-2,2-dioxide or a water-soluble salt thereof in conjunction with a carrier which includes sugar to form a composition containing from about 0.05 to about 5% by weight anti-caries compound whereby the incidence of caries is inhibited or prevented in comparison to the incidence of caries expected as a result of inclusion of sugar in said composition.

4,374,123
FLAVORING WITH 4-METHYL-3-CYCLOHEXENE-1-CARBOXYLIC ACID
Domenick Luccarelli, Jr., Ocean, and Takao Yoshida, West Long Beach, both of N.J., assignors to International Flavors & Fragrances Inc., New York, N.Y.
Filed Nov. 19, 1981, Ser. No. 322,842
Int. Cl.³ A23L *1/235*
U.S. Cl. 424—49 **4 Claims**

1. A process for augmenting or enhancing the aroma or taste of a blueberry, raspberry or blackberry flavored foodstuff, chewing gum, medicinal product or toothpaste comprising the step of adding to a foodstuff, medicinal product, toothpaste or chewing gum base from 0.05 parts per million up to about 300 parts per million based on the total composition of 4-methyl-3-cyclohexene-1-carboxylic acid.

4,374,124
DENTAL PLAQUE-PREVENTIVE OXAZOLIDINE CONTAINING COMPOSITIONS AND METHOD
Michael Jarcho, El Cajon, Calif., assignor to Sterling Drug Inc., New York, N.Y.
Filed Mar. 22, 1982, Ser. No. 360,573
Int. Cl.³ A61K *7/16, 7/22*
U.S. Cl. 424—54 **6 Claims**

1. An oral composition for the prevention of dental plaque comprising an effective amount consisting from 1.0% to 0.001% by weight of a compound having the formula:

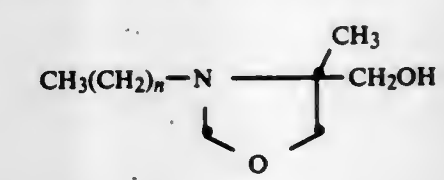

where n is an integer from 15 to 17, and a compatible, pharmaceutically acceptable tooth paste, tooth powder, tooth ointment, mouthwash, troche, lozenge, chewing gum, food or drink carrier.

4,374,125
HAIR MOISTURIZING COMPOSITIONS
Gerald P. Newell, Hanover Park, Ill., assignor to Helene Curtis Industries, Inc., Chicago, Ill.
Filed Jun. 5, 1978, Ser. No. 912,360
Int. Cl.^{3} A61K *7/06, 47/00*
U.S. Cl. 424—70 **9 Claims**

1. An aqueous hair treatment composition for restoring and maintaining the proper moisture level in hair comprising from about 0.01 to about 1 weight percent of sodium-2-pyrrolidone-5-carboxylate, from about 0.1 to about 5.0 weight percent of glycerin and from about 0.1 to about 5.0 weight percent of protein derived from a collagenous source, said protein being soluble in at least one liquid of the group consisting of water and ethanol.

4,374,126
FILM FORMING ANTIMICROBIAL MATERIAL
Nathan F. Cardarelli, Barberton, and William H. Evans, Akron, both of Ohio, assignors to Warner-Lambert Company, Morris Plains, N.J.
Filed Feb. 23, 1981, Ser. No. 237,051
Int. Cl.^{3} A61K *31/78*
U.S. Cl. 424—81 **14 Claims**

1. An alcohol insoluble, antimicrobial topical coating composition comprising:

A. from about 6% to about 13% by weight of said composition of a lower acrylate interpolymer which has the formula:

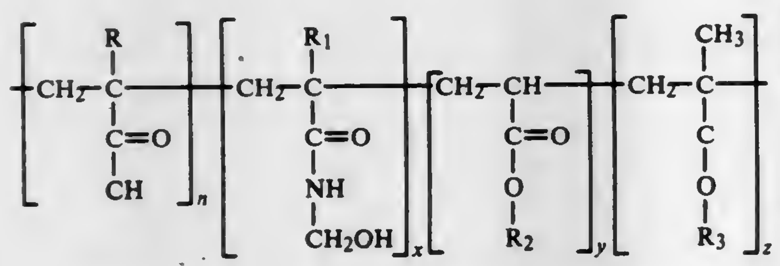

wherein R and R_1 each represents hydrogen and methyl, R_2 represents either methyl, ethyl, propyl or butyl; R_3 represents methyl or ethyl; n represents from 3 to 12 weight percent based on combined weight of x, y and z; x represents from 8 to 25 weight percent based on the combined weight of n and z; y represents from 45 to 89 weight percent based on combined weight of n, x and z; z represents from 0 to 44 weight percent based on the combined weights of n, x and y, the sum of the numerical values of n+x+y+z s always 100 and the groups n, x, y and z are present in the polymer in a heterogeneous relative order;

B. from about 1% to about 3% by weight of said composition of urea as a cross linking agent; and

C. the remainder comprising an adhesion-promoting material selected from the group consisting of a secondary solvent, an emollient, and mixtures thereof, and at least one antimicrobial agent.

4,374,127
HERPES SUB UNIT VACCINE
Vivian M. Larson, Harleysville, and E. Dale Lehman, Lansdale, both of Pa., assignors to Merck & Co., Inc., Rahway, N.J.
Continuation-in-part of Ser. No. 934,554, Aug. 21, 1978, abandoned, which is a continuation-in-part of Ser. No. 834,598, Sep. 19, 1977, abandoned. This application Feb. 11, 1980, Ser. No. 120,409
Int. Cl.^{3} A61K *39/245*
U.S. Cl. 424—89 **8 Claims**

1. An antigenic, immunogenic HSV-2 subunit vaccine consisting essentially of 3 groups of viral directed membrane-bound glycoproteins which are soluble in the presence of a non-ionic or anionic surfactant, the first of the three groups being from about 110,000 to about 130,000 daltons, the second of the three groups being from about 83,000 to about 90,000 daltons, and the third of the three groups being from about 55,000 to about 60,000 daltons, the subunit vaccine being substantially free of intact DNA and being capable of inducing neutralizing antibody and of being administered as a vaccine at a protein use level of from about 1 to about 100 μg.

4,374,128
SUBSTITUTED DEOXYADENOSINE DERIVATIVES
Philippe Bey, Strasbourg; Michel Jung, Illkirch-Graffenstaden; Michael Kolb, Truchtersheim, and Charles Danzin, Strasbourg, all of France, assignors to Merrell Toraude et Compagnie, Strasbourg, France
Filed Mar. 13, 1981, Ser. No. 243,280
Claims priority, application United Kingdom, Mar. 25, 1980, 8009995
Int. Cl.^{3} A61K *31/70;* **C07H** *19/16*
U.S. Cl. 424—180 **16 Claims**

1. A 5'-N-(aminoalkyl)amino-5'-deoxyadenosine of the formula

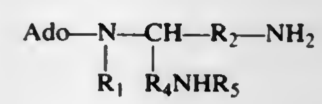

wherein:
Ado represents 5'-deoxyadenosine-5'-yl;
R_1 represents hydrogen, methyl or ethyl;
R_2 represents C_1–C_8 alkylene;
R_4 represents C_1–C_8 alkylene;
R_5 represents hydrogen, C_1–C_6 alkyl or —R_6NHR_7;
R_6 represents C_1–C_4 alkylene; and
R_7 represents hydrogen or C_1–C_4 alkyl or a pharmaceutically acceptable acid addition salt thereof.

15. A pharmaceutical composition for controlling undesirable cell proliferation in a warm-blooded animal in need thereof comprising a therapeutically effective amount of a compound as claimed in claim 1 as an active ingredient and a pharmaceutically acceptable diluent or carrier.

4,374,129
ANTIBIOTICALLY ACTIVE AMINOPAPULACANDIN DERIVATIVES
Peter Traxler, Schönenbuch, Switzerland, assignor to Ciba-Geigy Corporation, Ardsley, N.Y.
Filed Dec. 14, 1981, Ser. No. 330,409
Claims priority, application Switzerland, Dec. 16, 1980, 9266/80
Int. Cl.^{3} A61K *31/71;* **C07H** *13/04*
U.S. Cl. 424—180 **18 Claims**

1. An N-acylated 11-amino derivative of papulacandin A or B of the formula I

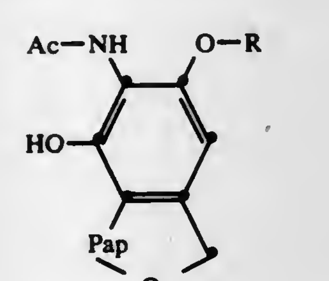

(I)

in which Pap is the remainder of papulacandin A or B, R represents methyl or hydrogen and Ac represents the acyl radical of an α-amino acid which occurs naturally as a peptide-building unit, or of a lower alkanesulfonic acid having a maximum of 7 carbon atoms, or a lower alkanoic acid having a maximum of 7 carbon atoms, or the acyl radical Ac_i of the formula

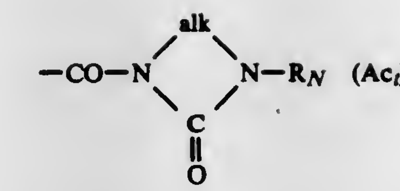

in which R_N represents hydrogen, formyl, lower alkoxycarbonyl, carbamoyl, hydroxy-lower alkyl or a hydrocarbyl having a maximum of 8 carbon atoms, and alk represents an alkylene radical having from 2–8 carbon atoms which separates the two nitrogen atoms from each other by a minimum of 2 and a maximum of 4 carbon atoms, or an acid addition salt of said compound in which Ac is the acyl radical of an α-amino acid.

17. Therapeutic method for inhibiting or eliminating microbial infections in a warm-blooded animal by the administration to this warm-blooded animal of a compound according to any one of claims 1, 12, or 13 alone or in the form of a pharmaceutical preparation in amounts that are effective for the inhibition or elimination of the infection in this warm-blooded animal.

4,374,130
4,4'-(ALKANEDIYL)-BIS(2,2,6,6-TETRAALKYL-1-OXA-4-AZA-2,6-DISILACYCLOHEXANES)
Sandor Barcza, Mountain Lakes, N.J., assignor to Sandoz, Inc., East Hanover, N.J.
Division of Ser. No. 173,459, Jul. 30, 1980, abandoned. This application Jan. 22, 1981, Ser. No. 227,179
Int. Cl.^{3} A61K *31/695*
U.S. Cl. 424—184 **3 Claims**

1. A pharmaceutical composition for inhibiting glucagon which comprises a glucagon inhibiting effective amount of a compound of the formula,

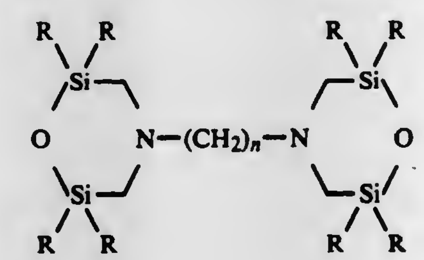

wherein
each R, independently, is C_{1-4}-alkyl, and
n is an integer 3, 5 or 7,
or a pharmaceutically acceptable salt thereof, and a pharmaceutically acceptable carrier.

4,374,131
AMINO AND SUBSTITUTED AMINO PHOSPHINYL-ALKANOYL COMPOUNDS
Edward W. Petrillo, Jr., Pennington, N.J., assignor to E. R. Squibb & Sons, Inc., Princeton, N.J.
Filed Apr. 27, 1981, Ser. No. 258,194
Int. Cl.^{3} A61K *31/675;* **C07F** *9/30, 9/32*
U.S. Cl. 424—200 **37 Claims**

1. A compound of the formula

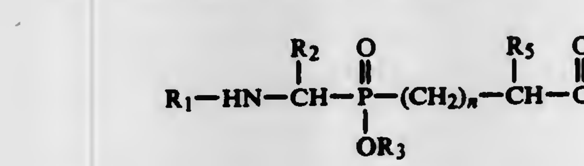

wherein
X is an imino acid of the formula

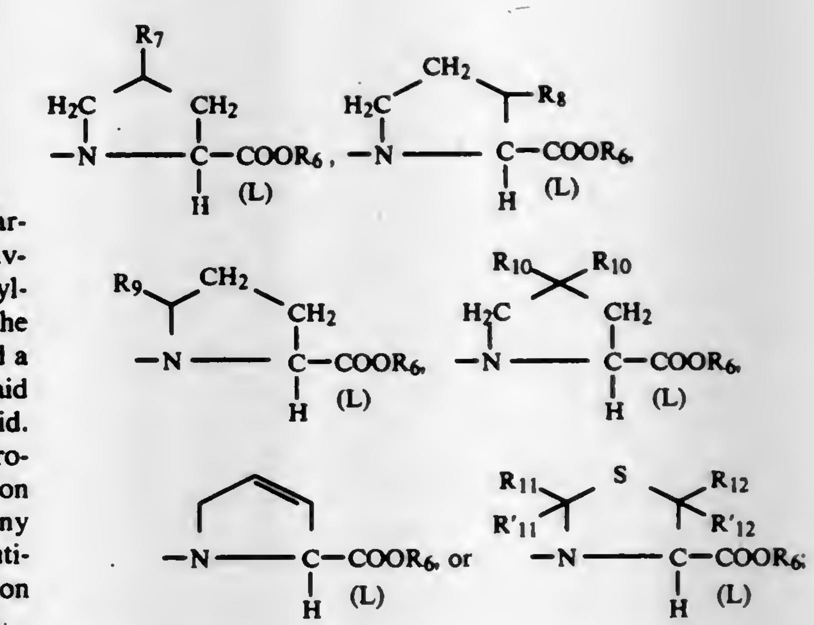

R_7 is hydrogen, lower alkyl, halogen, keto, hydroxy,

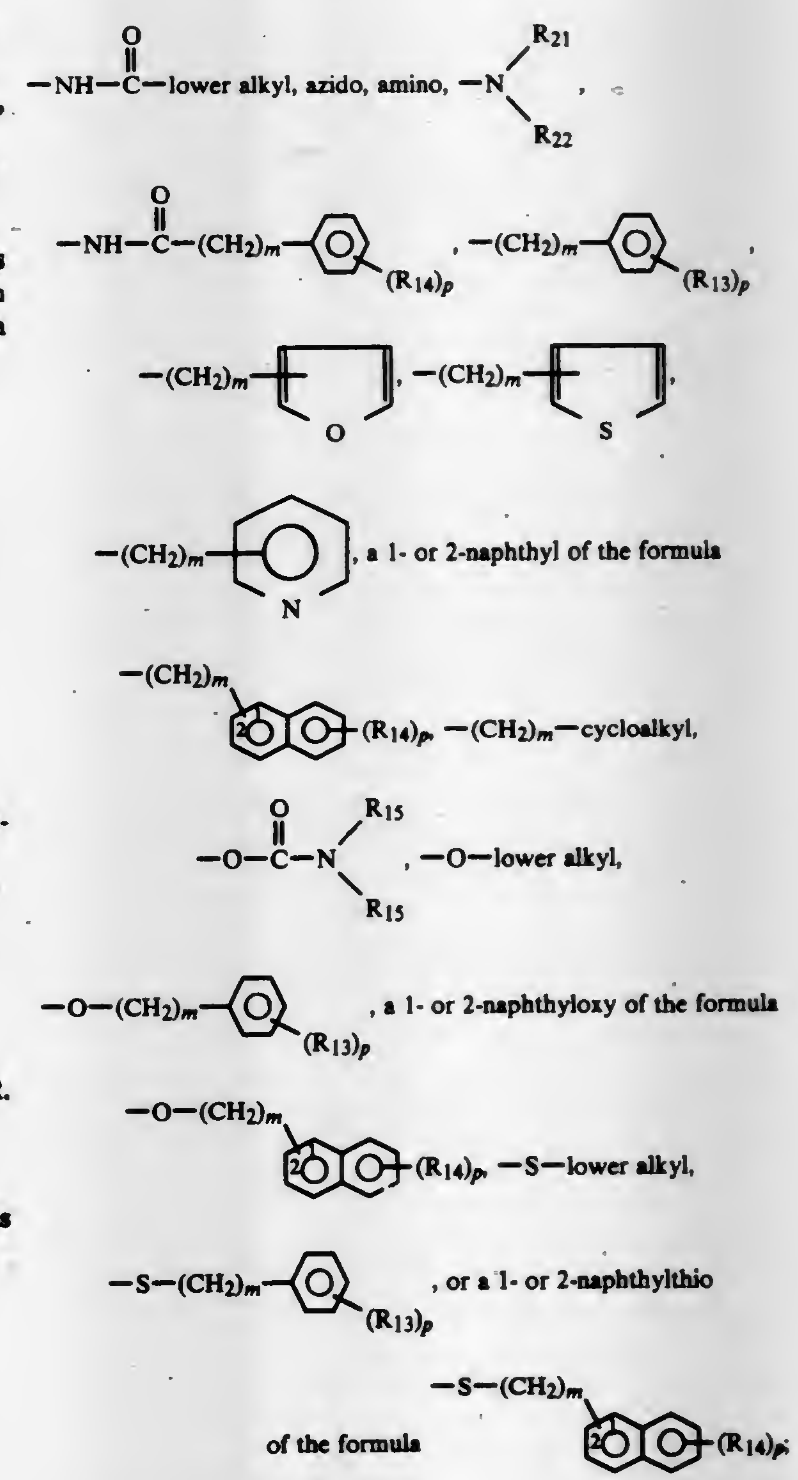

R_8 is keto, halogen,

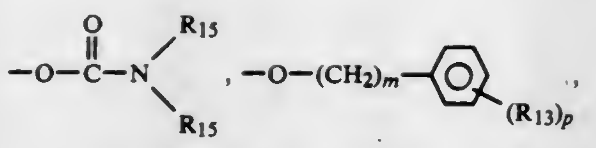

O—lower alkyl, a 1- or 2-naphthyloxy of the formula

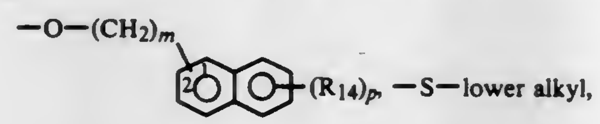

, or a 1- or 2-naphthylthio

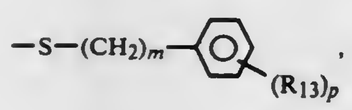

of the formula

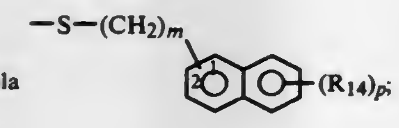

R_9 is keto or

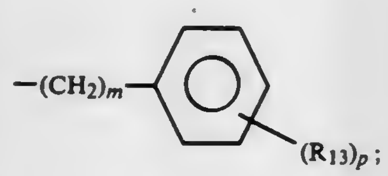

R_{10} is halogen or —Y—R_{16};
R_{11}, R_{11}', R_{12} and R_{12}' are independently selected from hydrogen and lower alkyl or R_{11}', R_{12} and R_{12}' are hydrogen and R_{11} is

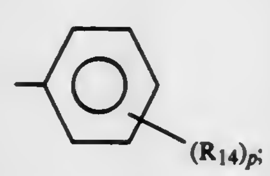

R_{13} is hydrogen, lower alkyl of 1 to 4 carbons, lower alkoxy of 1 to 4 carbons, lower alkylthio of 1 to 4 carbons, chloro, bromo, fluoro, trifluoromethyl, hydroxy, phenyl, phenoxy, phenylthio, or phenylmethyl;
R_{14} is hydrogen, lower alkyl of 1 to 4 carbons, lower alkoxy of 1 to 4 carbons, lower alkylthio of 1 to 4 carbons, chloro, bromo, fluoro, trifluoromethyl, or hydroxy;
m is zero, one, two or three;
p is one, two or three provided that p is more than one only if R_{13} or R_{14} is hydrogen, methyl, methoxy, chloro, or fluoro;
R_{15} is hydrogen or lower alkyl of 1 to 4 carbons;
Y is oxygen or sulfur;
R_{16} is lower alkyl of 1 to 4 carbons,

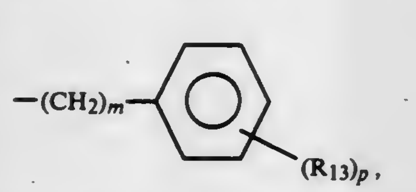

or the R_{16} groups join to complete an unsubstituted 5- or 6-membered ring or said ring in which one or more of the carbons has a lower alkyl of 1 to 4 carbons or a di(lower alkyl of 1 to 4 carbons) substituent;
n is zero or one;
R_5 is hydrogen, lower alkyl, halo substituted lower alkyl, benzyl or phenethyl;
R_3 and R_6 are independently selected from hydrogen, lower alkyl, benzyl, benzhydryl, or

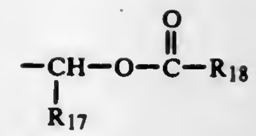

wherein R_{17} is hydrogen, lower alkyl, or phenyl, and R_{18} is hydrogen, lower alkyl, lower alkoxy, phenyl, or R_{17} and R_{18} taken together are —$(CH_2)_2$—, —$(CH_2)_3$—, —CH=CH—, or

R_1 is hydrogen,

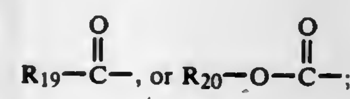

R_{19} is hydrogen, lower alkyl, halo substituted lower alkyl, amino substituted lower alkyl,

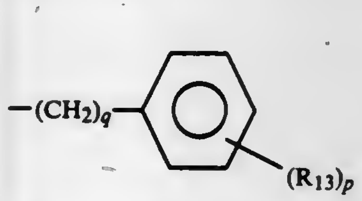

wherein R_{13} and p are as defined above and q is zero or an integer from 1 to 7, cycloalkyl,

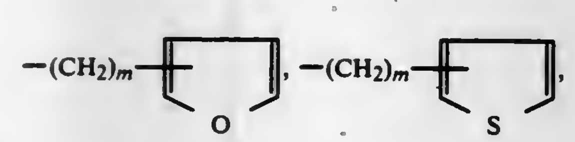

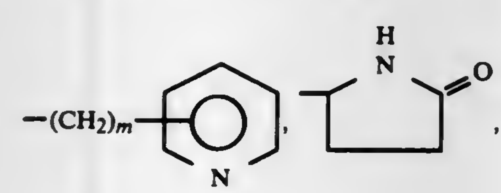

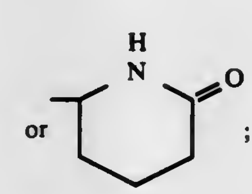

R_{20} is lower alkyl, phenyl, benzyl or phenethyl;
R_{21} is lower alkyl, benzyl or phenethyl;
R_{22} is hydrogen, lower alkyl, benzyl or phenethyl;
R_2 is hydrogen, lower alkyl, lower alkenyl, halo substituted lower alkyl,

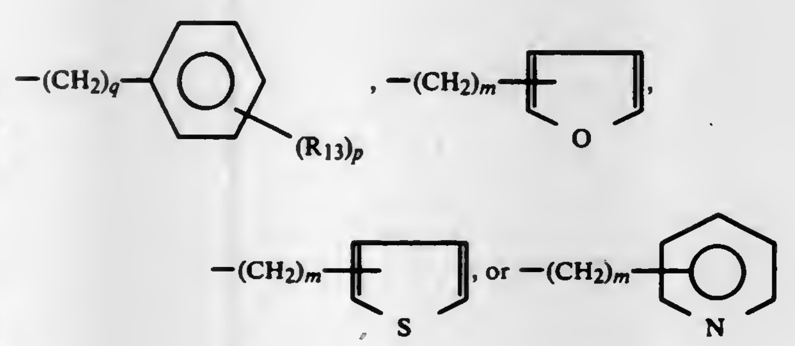

wherein q, R_{13}, p and m are as defined above; and when either or both of R_3 and R_6 are hydrogen a basic addition salt or an amino acid addition salt thereof.

36. A pharmaceutical composition useful for treating hypertension comprising a pharmaceutically acceptable carrier and one or more compounds of claim 1 or pharmaceutically acceptable salts thereof.

4,374,132
PLASMA URIC ACID LOWERING METHOD
Joan R. Dembinski, Albany, N.Y., assignor to Sterling Drug Inc., New York, N.Y.
Filed Dec. 10, 1979, Ser. No. 101,628
Int. Cl.³ A61K *31/58*
U.S. Cl. 424—241 **1 Claim**

1. The method of treating a person other than a pregnant female person having an abnormally high plasma uric acid concentration which comprises administering to the person an amount of 17β-hydroxy-4,4,17α-trimethyl-5-androsteno[2,3-d]isoxazole effective in lowering the plasma uric acid concentration.

4,374,133
TRICYCLIC COMPOUNDS
Johannes H. Wieringa, Heesch, Netherlands, assignor to Akzo n.v., Oss, Netherlands
Filed Dec. 16, 1981, Ser. No. 331,303
Claims priority, application Netherlands, Dec. 22, 1980, 8006955
Int. Cl.³ A61K *31/395;* C07D *245/04, 267/00, 281/00*
U.S. Cl. 424—244 **4 Claims**

1. Compound of the general formula I:

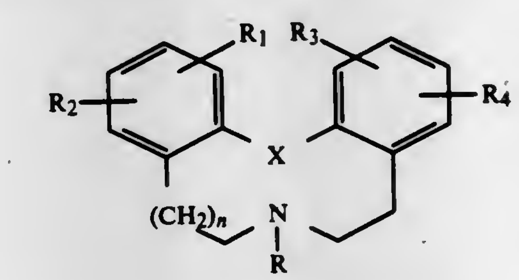

or a pharmaceutically acceptable acid addition salt or nitrogen oxide thereof, in which
X represents oxygen, sulphur or the group NR_5,
R_5 is hydrogen or alkyl (1-4 C),
R_1, R_2, R_3, R_4 each represent hydrogen, hydroxy, halogen, cyano, alkyl, alkoxy, aralkoxy, alkylthio, methylenedioxy, CF_3, NO_2, NH_2, hydroxyalkyl, or an acyloxy group,
R represents hydrogen, alkyl, alkenyl or aralkyl, hydroxyalkyl or acyloxyalkyl and
n represents the number 0, 1 or 2.

4,374,134
CEPHALOSPORIN COMPOUNDS WITH TERMINAL AMINOCARBOXYLIC ACID GROUPINGS AND ANTI-BACTERIAL USE THEREOF
Karoly Kocsis; Peter Schneider, both of Basel; Bruno Fechtig, Reinach, and Riccardo Scartazzini, Basel, all of Switzerland, assignors to Ciba-Geigy Corporation, Ardsley, N.Y.
Continuation of Ser. No. 923,524, Jul. 11, 1978, abandoned. This application Feb. 11, 1980, Ser. No. 120,591
Claims priority, application Luxembourg, Jul. 18, 1977, 77786
Int. Cl.³ A61K *31/575;* C07D *501/38, 507/46*
U.S. Cl. 424—246 **13 Claims**

1. An acylamino-3-cephem-4-carboxylic acid compound of the formula

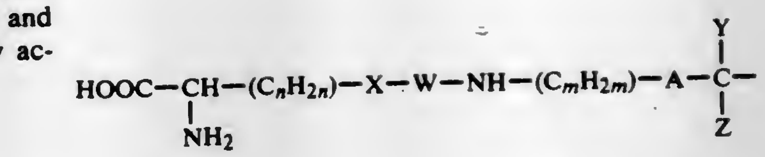

(I)

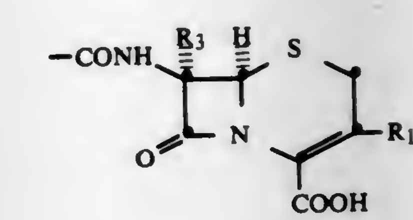

in which
n represent an integer from 1 to 4,
m represents 0 or 1,
X represents oxygen, sulphur or the —NH— group,
W represents the —CO—, —CO—$NHSO_2$— or —SO_2—$NHSO_2$— group, or
X-W together represent the —CO— or —CO—$NHSO_2$— group,
A represents phenylene, thienylene or furylene, or such group substituted by lower alkyl, lower alkoxy and/or halogen,
Y represents hydrogen, hydroxyl, formyloxy, amino or sulpho,
Z represents hydrogen, or
Y and Z together represent an oxo group or an =N—OR° group in which R° represents hydrogen, lower alkyl, or lower alkyl substituted by lower alkoxy, halogen, hydroxy, lower alkanoyloxy, sulpho, carboxy or lower alkoxycarbonyl,
R_1 represents hydrogen, lower alkyl, lower alkoxy, halogen or a group of the formula —CH_2—R_2, in which R_2 is free hydroxy or mercapto, lower alkanoyloxy, carbamoyloxy, lower alkylcarbamoyloxy, lower alkanoylthio, carbamoylthio, lower alkylcarbamoylthio, lower alkoxy, heterocyclylthio selected from the group consisting of imidazolylthio, triazolylthio, triazolylthio substituted by lower alkyl, tetrazolylthio, tetrazolylthio substituted by lower alkyl, di-lower alkylamino lower alkyl, sulfo-lower alkyl or carboxy-lower alkyl, thiazolylthio or isothiazolylthio substituted by lower alkyl or thienyl, thiadiazolylthio, thiadiazolylthio substituted by lower alkyl or carboxy-lower alkyl, thiatriazolylthio, oxazolylthio, isoxazolylthio, oxazolylthio or isoxazolylthio substituted by lower alkyl, oxadiazolylthio or oxadiazolylthio substituted by lower alkyl, 1-oxidopyridylthio, 1-oxidopyridylthio substituted by halogen, pyridazinylthio, pyridazinylthio substituted by hydroxy, N-oxidopyridazinylthio, N-oxidopyridazinylthio substituted by lower alkyl, lower alkoxy, or halogen, 2-oxo-1,2-dihydropyrimidinylthio and 2-oxo-1,2-dihydropyrimidinylthio substituted by lower alkyl, amino, di-lower alkylamino or carboxy,
or R_2 is a quaternary ammonium group selected from the group consisting of tri-lower alkyl ammonium, pyrimidinium, pyridazinium, thiazolium, quinolinium, pyridinium and pyridinium substituted by lower alkyl, hydroxy-lower alkyl, amino, 4-aminophenylsulfonamido, hydroxy, halogen, halogen-lower alkyl, sulfo, carboxy, lower-alkoxycarbonyl, cyano, carbamoyl, lower alkylcarbamoyl, di-lower alkylcarbamoyl, hydrazinocarbonyl, carboxy-lower alkyl, lower alkanoyl or 1-lower alkylpyrrolidinyl, and R_3 represents hydrogen or methoxy, and wherein the term "lower" indicates the group to which it is connected is having one to four carbon atoms, and the pharmaceutically acceptable salts thereof.

4,374,135

COMPOSITIONS CONTAINING ANOREXIGENIC COMPOUNDS AND METHODS FOR REGULATING THE FEED INTAKE OF HOMOTHERMIC ANIMALS

Melvin C. Johnson, East Brunswick, N.J., assignor to American Cyanamid Company, Stamford, Conn.

Filed Dec. 5, 1980, Ser. No. 213,287
Int. Cl.³ A61K *31/505, 31/33, 31/15*
U.S. Cl. 424—251 **13 Claims**

1. A method for reducing the appetite of animals comprising homothermic zoo animals, companion animals and rodents which comprises administering to said animals orally or parenterally an appetite suppressing amount of a compound selected from the group consisting of 1,5-bis(α,α,α-trifluoro-p-tolyl)-1,4-pentadien-3-one, (1,4,5-6-tetrahydro-5,5-dimethyl-2-pyrimidinyl)hydrazone; 1,5-bis(α,α,α-trifluoro-p-tolyl)-1,4-pentadien-3-one-(E,E)-azine with hexahydro-2H-1,3-diazepin-2-one; 1,5-bis(p-chlorophenyl)-1,4-pentadien-3-one, (1,4,5,6-tetrahydro-5,5-dimethyl-2-pyrimidinyl)hydrazone; 1,5-bis-(α,α,α-trifluoro-p-tolyl)-1,4-pentadien-3-one, (1,4,5,6-tetrahydro-2-pyrimidinyl)hydrazone; and acid addition salts thereof.

4,374,136

PYRIMIDINE DERIVATIVES

Jack Hill, London; Brian W. Sharp, Hornchurch; Dennis Warburton, Brentwood, all of England; Robert B. Walker, deceased, late of Hornchurch, England, and by Thomas Walker, administrator, Chester, England, assignors to May & Baker Limited, Essex, England

Filed Oct. 21, 1981, Ser. No. 313,493
Claims priority, application United Kingdom, Oct. 27, 1980, 8034572
Int. Cl.³ C07D *239/48;* **A61K** *31/305*
U.S. Cl. 424—251 **6 Claims**

1. A pyrimidine derivative of the formula:

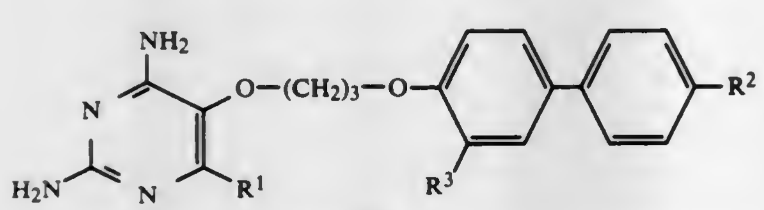

wherein R¹ represents methyl or ethyl, R² represents bromine or chlorine, and R³ represents hydrogen, chlorine, bromine or iodine, or alkyl of 1 through 4 carbon atoms, alkenyl of 2 through 4 carbon atoms, cyano or trifluoromethyl, and its pharmaceutically acceptable acid addition salts.

4,374,137

SPIRO[BENZOFURANISOQUINOLINE]S AND THEIR USE AS PHARMACEUTICALS

Richard C. Effland, Bridgewater; Larry Davis, Sergeantsville, and Joseph T. Klein, Bridgewater, all of N.J., assignors to Hoechst-Roussel Pharmaceuticals Inc., Somerville, N.J.

Filed Aug. 7, 1981, Ser. No. 290,987
Int. Cl.³ A61K *31/47;* **C07D** *491/07*
U.S. Cl. 424—258 **72 Claims**

1. A compound of the formula

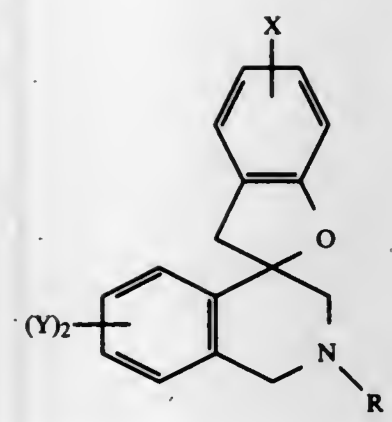

wherein Y is hydrogen or methoxy; X is hydrogen or halogen; R is hydrogen, loweralkyl, loweralkenyl, loweralkynyl, cycloalkylloweralkyl having 3 to 10 carbon atoms in the cycloalkyl moiety, cycloalkylcarbonyl having 3 to 10 carbon atoms in the cycloalkyl moiety, loweralkanoyl,

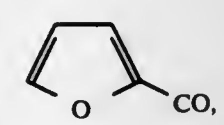

COOR¹, wherein R¹ is loweralkyl or phenyl, COCOOR² wherein R² is loweralkyl,

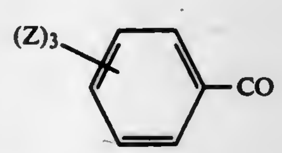

wherein Z is methoxy,

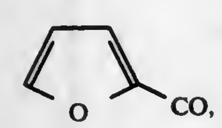

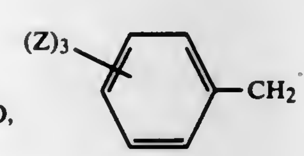

wherein Z is hydrogen or methoxy, NH_2, NO,

NOH
‖
CNH_2,

$CH_2CR^3H(CH_2)_mNR^4R^5$ wherein R³ is hydrogen or loweralkyl, m is 0 or 1, R⁴ and R⁵ are each independently hydrogen or loweralkyl, or R⁴ and R⁵ taken together with the nitrogen atom to which they are attached form a group of the formula

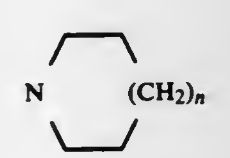

wherein n is 0 or 1,

NH
‖
$(CH_2)_pNHCNH_2$

wherein p is 2, $(CH_2)_qCN$ wherein q is 0 or 1,

S
‖
$CNHR^6$

wherein R⁶ is loweralkyl,

NR^6
‖
$CSCH_3$

wherein R⁶ is loweralkyl,

NR^7
‖
$CNHR^8$

wherein R⁷ is loweralkyl and R⁸ is $(CH_2)_rNR^4R^5$ wherein R⁴ and R⁵ are as above and r is 2 or 3, the tautomers, geometrical isomers and optical antipodes thereof or the pharmaceutically acceptable acid additional salts thereof when R is other than cycloalkylcarbonyl having 3 to 10 carbon atoms in the cycloalkyl moiety, loweralkanoyl,

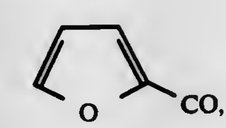

COOR¹ wherein R¹ is as above, COCOOR² wherein R² is as above,

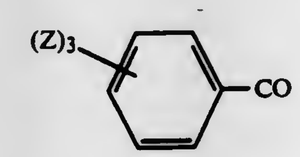

wherein Z is as above, NO, $(CH_2)_qCN$ wherein q is 0 and

S
‖
$CNHR^6$

is as above.

65. A method of producing diuresis comprising administering to a mammal in need of diuresis a diuretically effective amount of a compound as defined in claim **1** or **12** or **52**.

4,374,138

ANTIBACTERIAL AMIDE COMPOUNDS, COMPOSITIONS, AND METHODS OF USE

Theodore H. Haskell, Ann Arbor, and Marland P. Hutt, Saline, both of Mich., assignors to Warner-Lambert Company, Morris Plains, N.J.

Filed Nov. 13, 1981, Ser. No. 321,020
Int. Cl.³ A61K *31/47;* **C07D** *499/70, 215/22*
U.S. Cl. 424—258 **10 Claims**

1. A compound of the formula

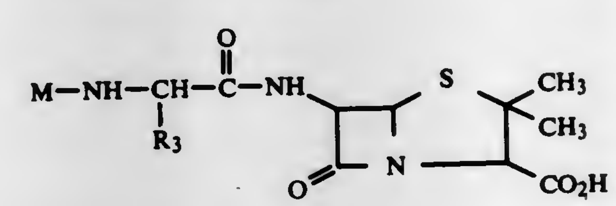

and pharmaceutically acceptable salts thereof; wherein M is

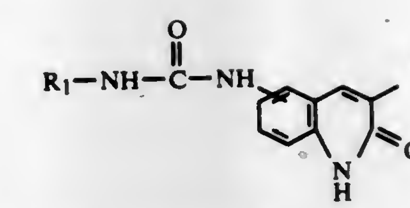

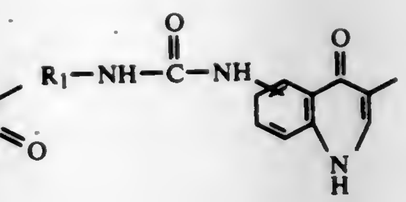

R_1 is lower alkyl or

$$R_2-X-\overset{\displaystyle O}{\overset{\|}{C}}-\text{lower alkyl};$$

R_2 is hydrogen or lower alkyl; X is O or NH and R_3 is phenyl, 4-hydroxyphenyl, 2-thienyl or cyclohexa-1,4-dien-1-yl.

4,374,139

LEVOROTATORY N-SUBSTITUTED ACYLMORPHINANS USEFUL AS ANALGESIC AGENTS

Ernest Mohacsi, Nutley, N.J., assignor to Hoffmann-La Roche Inc., Nutley, N.J.

Filed Nov. 9, 1981, Ser. No. 319,482
Int. Cl.³ A61K *31/485;* **C07D** *221/28*
U.S. Cl. 424—260 **22 Claims**

1. A compound of the formula

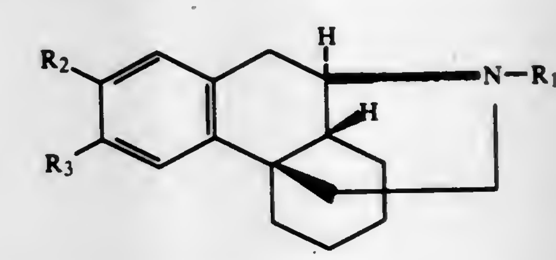

I

wherein R_1 is hydrogen, lower alkyl, lower alkenyl, cycloalkyl-lower alkyl, cyano-lower alkyl, phenyl-lower alkyl, naphthyl-lower alkyl or 5- or 6-membered heterocyclic-lower alkyl selected from the group consisting of thienyl-lower alkyl, pyrrolyl-lower alkyl, furyl-lower alkyl, pyridyl-lower alkyl and pyranyl-lower alkyl, and one of R_2 or R_3 is hydrogen and the other of R_2 or R_3 is alkanoyl of 2 to 7 carbon atoms, benzoyl, naphthoyl, trifluoromethylcarbonyl, or

$$CH_3(CH_2)_n-\overset{\displaystyle OH}{\underset{\displaystyle R}{C}}-,$$

wherein R is hydrogen or lower alkyl and n is 0 to 6, or a salt thereof with a pharmaceutically acceptable acid addition salt.

20. A pharmaceutical composition comprising an analgesically effective amount of a compound of the formula

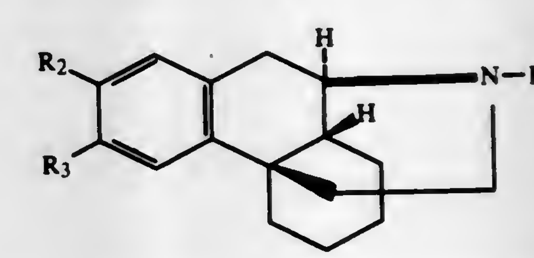

I

wherein R_1 is hydrogen, lower alkyl, lower alkenyl, cycloalkyl-lower alkyl, cyano-lower alkyl, phenyl-lower alkyl, naphthyl-lower alkyl or 5- or 6-membered heterocyclic-lower alkyl selected from the group consisting of thienyl-lower alkyl,

pyrrolyl-lower alkyl, furyl-lower alkyl, pyridyl-lower alkyl and pyranyl-lower alkyl, and one of R_2 or R_3 is alkanoyl of 2 to 7 carbon atoms, benzyl, naphthoyl, trifluoromethylcarbonyl, or

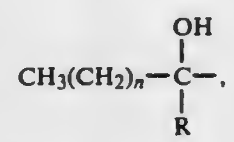

wherein R is hydrogen or lower alkyl and n is 0 to 6, or a salt thereof with a pharmaceutically acceptable acid addition salt, and an inert pharmaceutical carrier.

4,374,140
2-SUBSTITUTED PROPOXY-3-CYANO-5-HYDROXYPYRIDINES AND USE AS ANTIHYPERTENSIVES

John J. Baldwin, Gwynedd Valley; Gerald S. Ponticello, Lansdale; Stanley Vickers, Perkasie, all of Pa., and Alfred Steuerwald, Orbis, Fed. Rep. of Germany, assignors to Merck & Co., Inc., Rahway, N.J.
Continuation of Ser. No. 80,812, Oct. 1, 1979, abandoned. This application Feb. 10, 1981, Ser. No. 233,275
Int. Cl.³ A61K *31/44;* **C07D** *213/84*
U.S. Cl. 424—263 **7 Claims**

1. Compounds of the formula

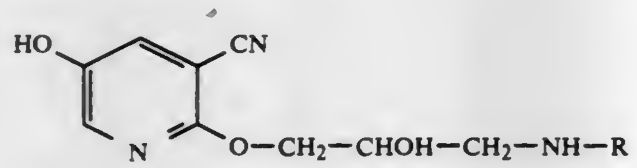

and pharmaceutically acceptable salts thereof wherein R is isopropyl or t-butyl.

4,374,141
2-SUBSTITUTED AMINO-5-(PYRIDINYL)-NICOTINAMIDES AND THEIR CARDIOTONIC USE

George Y. Lesher; Chester J. Opalka, Jr., both of Schodack, and Donald F. Page, East Greenbush, all of N.Y., assignors to Sterling Drug Inc., New York, N.Y.
Filed Aug. 17, 1981, Ser. No. 293,248
Int. Cl.³ C07D *401/04;* **A61K** *31/455*
U.S. Cl. 424—266 **11 Claims**

1. A 2-RR'N-5-PY-6-Q-nicotinamide having the formula

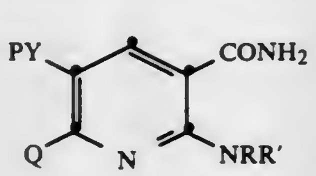

where Q is hydrogen or lower-alkyl, R is lower-alkyl, lower-hydroxyalkyl, lower-alkoxyalkyl or Y-NB where Y is lower-alkylene having at least two carbon atoms between its connecting linkages, R' is hydrogen or methyl and PY is 4- or 3-pyridinyl or 4- or 3-pyridinyl having one or two lower-alkyl substituents, or pharmaceutically acceptable acid-addition salt thereof.

6. A cardiotonic composition for increasing cardiac contractility, said composition comprising a pharmaceutically acceptable inert carrier and, as the active component thereof, a cardiotonically effective amount of 2-RR'N-5-PY-6-Q-nicotinamide or pharmaceutically acceptable acid-addition salt thereof, where Q is hydrogen or lower-alkyl, R is lower-alkyl, lower-hydroxyalkyl, lower-alkoxyalkyl or Y-NB where Y is lower-alkylene having at least two carbon atoms between its connecting linkages, R' is hydrogen or methyl and PY is 4- or 3-pyridinyl or 4- or 3-pyridinyl having one or two lower-alkyl substituents.

4,374,142
BISDITHIOCARBAMATE ESTERS OF DI-LOWER ALKYL FORMALS

Eugene R. Bertozzi, Yardley, Pa., assignor to Thiokol Corporation, Newtown, Pa.
Division of Ser. No. 125,830, Feb. 29, 1980, abandoned, which is a continuation of Ser. No. 766,660, Feb. 8, 1977, abandoned. This application Oct. 14, 1980, Ser. No. 196,899
Int. Cl.³ A01N *43/40, 43/48, 43/78, 47/10*
U.S. Cl. 424—270 **6 Claims**

1. A composition comprising
(i) a biocide, in an amount effective to inhibit the growth of plant infections, which must conform to the formula

$$Q-(CH_2)_n-(OCH_2)_m-O-(CH_2)_n-X$$

wherein Q is a 2-mercaptothiazole radical of the following formula

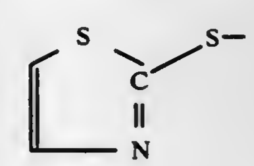

which is either unsubstituted or substituted with alkyl of from 1 to 10 carbon atoms, carbocyclic aryl of 6 or 10 carbon atoms in the aryl nucleus, or fused to a mono or bicyclic carbocyclic aryl of 6 or 10 carbon atoms in the aryl nucleus;
X is a monovalent radical which is either Q or —Cl,
n is an integer of from 2 to about 10;
m is an integer of from 1 to 3
(ii) an agriculturally acceptable carrier.

4,374,143
2-ARYLIMINO-IMIDAZOLIDINES, COMPOSITIONS CONTAINING SAME, AND METHOD OF USE THEREOF

Hendrik Dolman, and Johannes Kuipers, both of Weesp, Netherlands, assignors to Duphar International Research B.V., Netherlands
Division of Ser. No. 948,735, Oct. 5, 1978, abandoned. This application May 18, 1981, Ser. No. 264,460
Claims priority, application Netherlands, Oct. 18, 1977, 7711390
Int. Cl.³ A01N *43/50;* **C07D** *233/50*
U.S. Cl. 424—273 R **6 Claims**

1. A compound of the formula

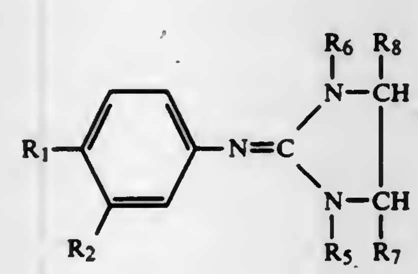

wherein
one of R_1 and R_2 is C_3–C_7 cycloalkyl and the other is C_3–C_7 cycloalkyl or a hydrogen atom,
R_5 and R_6 are equal or different and represent any of a hydrogen atom, C_1–C_4 alkyl, or C_2–C_5 alkanoyl,
R_7 and R_8 are equal or different and represent any of a hydrogen atom or C_1–C_4 alkyl, and
fungicidally acceptable acid addition salts or complexes thereof.

4,374,144
β-LACTAM COMPOUNDS, THEIR PREPARATION AND USE

David F. Corbett, Dorking, England, assignor to Beecham Group Limited, England
Continuation of Ser. No. 68,890, Aug. 23, 1979, abandoned. This application Nov. 3, 1980, Ser. No. 203,509
Claims priority, application United Kingdom, Sep. 9, 1978, 36266/78
Int. Cl.³ A61K *31/40;* **C07D** *487/04*
U.S. Cl. 424—274 **62 Claims**

1. A compound of the formula (VII):

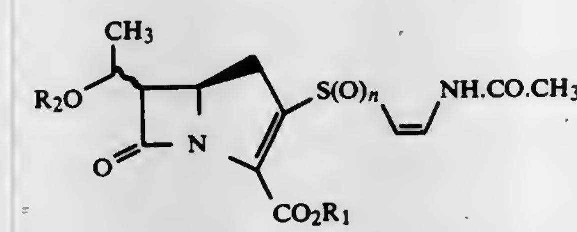

(VII)

wherein CO_2R_1 is carboxylic acid, a pharmaceutically acceptable salt thereof or a pharmaceutically acceptable ester thereof, n is 0 and R_2 is hydrogen, or a group of the sub-formula (a):

R_3O_3S (a)

wherein R_3 is a pharmaceutically acceptable salting ion, methyl or ethyl, or a group of the sub-formula (b):

R_4CO— (b)

wherein R_4 is R_5 or NHR_5 wherein R_5 is alkyl of up to 6 carbon atoms, alkenyl of up to 6 carbon atoms, phenyl unsubstituted or substituted by alkyl of up to 3 carbon atoms, alkoxyl of up to 3 carbon atoms, chlorine or fluorine or alkyl of up to 6 carbon atoms substituted by phenyl or phenyloxy which itself is unsubstituted or nuclear substituted by alkyl of up to 3 carbon atoms, alkoxyl of up to 3 carbon atoms, chlorine or fluorine, with the proviso that when R_2 is a group of the formula (a) the compound has cis stereochemistry about the β-lactam ring.

19. A pharmaceutical composition useful for treating bacterial infections in humans and animals which comprises an antibacterially effective amount of a compound of the formula (VII):

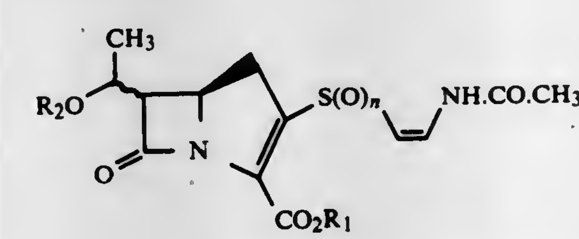

(VII)

wherein CO_2R_1 is carboxylic acid, a pharmaceutically acceptable salt thereof or a pharmaceutically acceptable ester thereof, n is O and R_2 is hydrogen, a group of the sub-formula (a):

R_3O_3S (a)

wherein R_3 is a pharmaceutically acceptable salting ion, methyl or ethyl, or a group of the sub-formula (b):

R_4CO— (b)

wherein R_4 is R_5 or NHR_5 is alkyl of up to 6 carbon atoms, alkenyl of up to 6 carbon atoms, phenyl unsubstituted or substituted by alkyl of up to 3 carbon atoms, alkoxyl of up to 3 carbon atoms, chlorine or fluorine or alkyl of up to 6 carbon atoms substituted by phenyl or phenyloxy which itself is unsubstituted or nuclear substituted by alkyl of up to 3 carbon atoms, alkoxyl of up to 3 carbon atoms, chlorine or fluorine, with the proviso that when R_2 is a group of the formula (a) the compound has cis stereochemistry about the β-lactam ring, in combination with a pharmaceutically acceptable carrier.

4,374,145
TIN COMPOUNDS

Wolfgang Wehner, Zwingenberg, Fed. Rep. of Germany; Saleem Farooq, Ettingen, Switzerland, and Hans-Günter Köstler, Heppenheim, Fed. Rep. of Germany, assignors to Ciba-Geigy Corporation, Ardsley, N.Y.
Filed Sep. 14, 1981, Ser. No. 301,570
Int. Cl.³ A01N *59/16;* **C07F** *7/22*
U.S. Cl. 424—278 **9 Claims**

1. An organo-tin substituted ammonium salt of the formula:

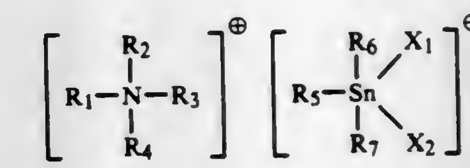

or of the formula:

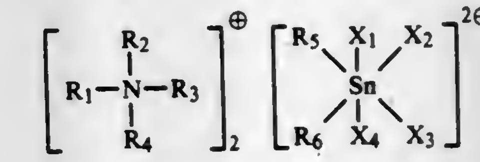

wherein each of R_1, R_2, and R_3 is hydrogen or the same or different alkyl of up to 20 carbon atoms;
R_4 is epoxyalkyl, haloalkyl or halohydroxyalkyl, each containing up to 6 carbon atoms;
R_5 is alkyl of up to 6 carbon atoms, cyclohexyl or phenyl;
each of R_6 and R_7, independently of the other, is either the same as R_5 or the same as X_1 as hereinafter defined;
X_1 is chloro or bromo; and
X_2, X_3 and X_4 are either all chloro or all bromo.

4,374,146
TOPICAL INFLAMMATORY PHARMACEUTICAL FORMULATIONS

Arthur P. Phillips, Raleigh, N.C., assignor to Burroughs Wellcome Co., Research Triangle Park, N.C.
Filed Nov. 23, 1981, Ser. No. 323,803
Claims priority, application United Kingdom, Nov. 26, 1980, 8037873
Int. Cl.³ A61K *31/36*
U.S. Cl. 424—282 **8 Claims**

1. A method for the treatment or prophylaxis of a condition selected from pain, inflammation and pyresis in a mammal comprising the administration to said mammal of a non-toxic, effective analgesic, anti-inflammatory or antipyretic amount of a compound of N-(1,3-benzodioxol-5-yl) acetamide.

4,374,147
13-OXO-MONIC ACID ESTERS USEFUL AS ANTIBACTERIAL AND ANTIMYCOPLASMAL AGENTS

Kong Luk, Horley, and Norman H. Rogers, Horsham, both of England, assignors to Beecham Group Limited, England
Filed Jun. 5, 1981, Ser. No. 271,006
Claims priority, application United Kingdom, Jun. 14, 1980, 8019509
Int. Cl.³ A61K *31/35;* **C07D** *309/06*
U.S. Cl. 424—283 **7 Claims**

1. A compound of formula (II):

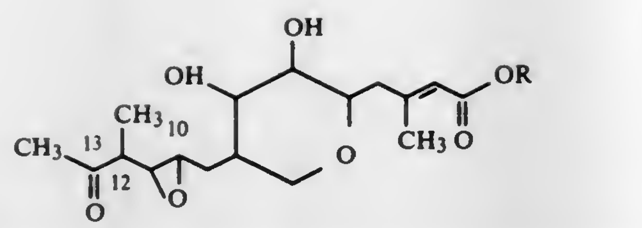
(II)

in which R is a pharmaceutically acceptable ester-forming radical.

7. A method for treating bacterial or mycoplasmal infections of humans or animals, comprising the administration of an effective, non-toxic amount of the pharmaceutically acceptable ester according to claim 1 or a pharmaceutically acceptable salt of said ester where said ester-forming radical is substituted by carboxy, to the infected human or animal.

4,374,148
CARBOXYLIC ACID THERAPEUTIC AGENTS
John L. Belletire, Cincinnati, Ohio, assignor to Pfizer Inc., New York, N.Y.
Division of Ser. No. 199,153, Oct. 21, 1980, Pat. No. 4,305,955. This application Jul. 13, 1981, Ser. No. 282,762
Int. Cl.[3] A61K *31/165, 31/19, 31/235*
U.S. Cl. 424—317 **14 Claims**

1. A pharmaceutical composition suitable for oral administration comprising a pharmaceutically acceptable carrier and an effective blood sugar lowering amount of an oral hypoglycemic agent, said agent being a compound selected from the group consisting of carboxylic acids of the formula:

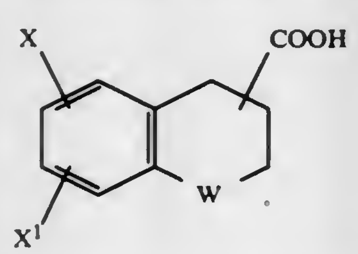

and the lower alkyl esters and unsubstituted amide derivatives thereof, and the base salts of said acids with pharmacologically acceptable cations, wherein

W is $-CH_2-$ or $-CH(CH_3)-$;

X is hydrogen or lower alkyl; and

X^1 is hydrogen, lower alkyl, lower alkoxy or lower phenylalkoxy, with the proviso that when X^1 is other than lower alkyl, X is hydrogen.

4,374,149
α-{[(ARYLALKYL)AMINO]ALKYL}-4-HYDROXY-3-(LOWER-ALKYLSULFINYL)BENZENEMETHANOLS
Richard E. Philion, Sand Lake, N.Y., assignor to Sterling Drug Inc., New York, N.Y.
Continuation-in-part of Ser. No. 803,372, Jun. 3, 1977, abandoned, which is a continuation-in-part of Ser. No. 699,856, Jun. 25, 1976, abandoned. This application Aug. 30, 1978, Ser. No. 937,928
Int. Cl.[3] A01N *33/02*
U.S. Cl. 424—330 **24 Claims**

1. A compound having the formula

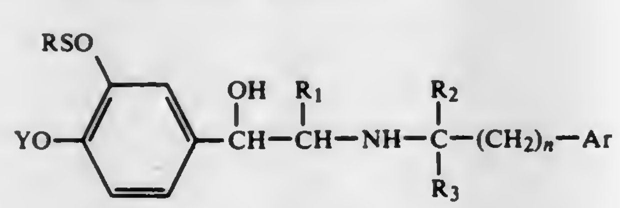

wherein:

R_1, R_2 and R_3 are independently hydrogen or lower alkyl;

n is an integer from 1 to 3;

Ar is phenyl, methylenedioxyphenyl or phenyl having from one to three substituents selected from the group consisting of halo, lower alkyl, hydroxy and lower alkoxy;

R is lower alkyl;

Y is hydrogen, lower alkyl, lower alkoxy-lower alkyl, lower alkanoyl, aroyl, benzenesulfonyl or toluenesulfonyl;

or an acid-addition salt thereof.

4,374,150
UREA YEAST FOOD FOR BAKING
Richard G. Harrell, Garland; Herman L. Glover, Carrollton, and Gary L. Cain, Dallas, all of Tex., assignors to Cain Food Industries, Inc., Dallas, Tex.
Filed Jun. 23, 1980, Ser. No. 161,884
Int. Cl.[3] A21D *2/24;* **C12N** *1/16*
U.S. Cl. 426—19 **7 Claims**

1. In a method of baking yeast leavened bakery products wherein dough is admixed with yeast, the dough is allowed to ferment, followed by the baking of the dough, the improvement comprising the addition of an amount of urea of from about 5 to about 400 weight parts per million weight parts of flour utilized to form the dough.

4,374,151
FROZEN DOUGH FOR BAKERY PRODUCTS
Ted R. Lindstrom, Tarrytown, and Louise Slade, Bedford Hills, both of N.Y., assignors to General Foods Corporation, White Plains, N.Y.
Filed Nov. 24, 1980, Ser. No. 209,911
Int. Cl.[3] A21D *13/00*
U.S. Cl. 426—19 **15 Claims**

1. A method of producing a frozen, leavened bread dough which is suitable for immediate baking when taken from the freezer comprising the steps of mixing bread forming ingredients including a leavening agent, fermenting said ingredients to produce a dough product, forming and resting the same, homogenously mixing in the dough, prior to forming and resting, an exogenous quantity of a water-soluble, melting-point depressant selected from a group consisting of C_1–C_3 monohydric alcohols, C_2 to C_4 polyhydric alcohols or combinations thereof such that the final concentration of melting-point depressant in the dough is from about 5% up to about 20% with respect to the weight of water contained in the dough freezing said dough product, whereby said melting-point depressant allows said frozen dough product to when placed in an oven quickly soften as oven temperature rises.

4,374,152
PROCESS FOR PREPARING ACID CHEESE CURD
Ira Loter, St. Louis, Mo., assignor to Mallinckrodt International Corp., St. Louis, Mo.
Continuation of Ser. No. 53,921, Jul. 2, 1979, abandoned. This application Jan. 7, 1981, Ser. No. 223,125
Int. Cl.[3] A23C *19/02, 19/05*
U.S. Cl. 426—39 **35 Claims**

1. An acid cheese curd making process comprising:

A. adding from about 0.1 to about 0.8 parts by weight of acid salt and from about 0.01 parts to about 0.05 parts by weight of proteolytic enzyme per 100 parts by weight of acidified milk to an acidified milk having a pH of from about 4.8 to about 5.5 without coagulation at a temperature of from about 75° F. to about 95° F.; and thereafter

B allowing the acidified milk from (A) to remain quiescent at a temperature of from about 75° F. to about 95° F. for from about 30 minutes to about 4 hours to form an acid cheese curd suitable for making cottage cheese, baker's cheese, quark cheese, cream cheese and Neufchatel cheese.

5. An acid cheese curd making process comprising:

A. acidifying milk under vigorous agitation at about 32° F. to about 95° F. with a sufficient amount of an acid salt per 100 parts by weight of milk to obtain an acidified milk having a pH of from about 4.8 to about 5.5 without coagulation; then

B. adjusting the acidified milk to a temperature of from about 75° F. to about 95° F.; then

C. maintaining the acidified milk at a temperature of from about 75° F. to about 95° F. and adding an acidogen and from about 0.01 parts to about 0.05 parts by weight of proteolytic enzyme per 100 parts by weight of the acidified milk; and thereafter

D. allowing the acidified milk from (C) to remain quiescent at a temperature of from about 75° F. to about 95° F. for from about 30 minutes to about 4 hours to form an acid cheese curd suitable for making cottage cheese, baker's cheese, quark cheese, cream cheese and Neufchatel cheese.

4,374,153
PROCESS FOR CONTROLLING THE PINKING OF ONIONS
Harry A. Andonian, Levittown, and Warren A. Dickinson, Jr., Glenside, both of Pa., assignors to SCM Corporation, New York, N.Y.
Filed Apr. 1, 1981, Ser. No. 250,007
Int. Cl.[3] A23B *7/02;* **A23L** *1/22*
U.S. Cl. 426—321 **11 Claims**

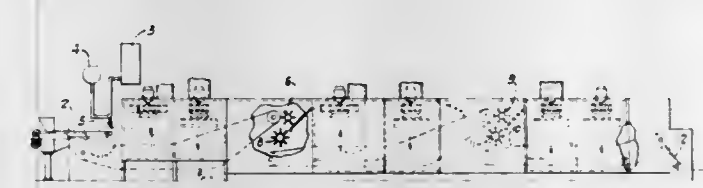

1. A process for dehydrating cut onion pieces and inhibiting the production of pink color in said onion pieces, which comprises the steps of:

drying the onion pieces in a first drying stage;

contacting said onion pieces with a base before or at an initial point in said drying, the amount of base being an effective amount for inhibiting the production of pink color, and

continuing the drying of said onion pieces in the presence of said effective amount of base until the moisture content of said onions is reduced to not substantially greater than about 60% Bone Dry Basis.

4,374,154
SOFT, FROZEN DESSERT FORMULATION
Bruce A. Cole, Tarrytown; Harold I. Levine, Monsey; Michael T. McGuire, Elmhurst; Kathleen J. Nelson, Peekskill, and Louise Slade, Monsey, all of N.Y., assignors to General Foods Corporation, White Plains, N.Y.
Filed Nov. 10, 1981, Ser. No. 320,168
Int. Cl.[3] A23G *9/00*
U.S. Cl. 426—565 **7 Claims**

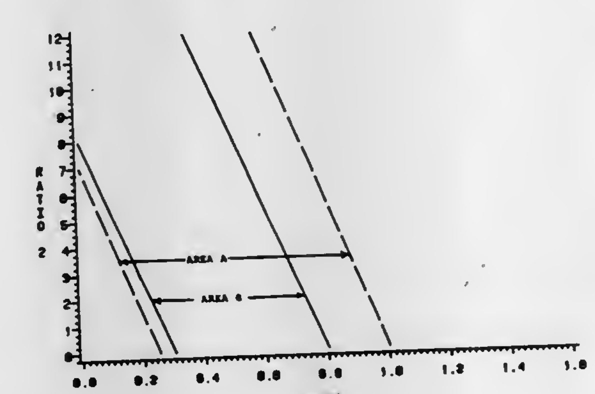

1. A frozen, aerated dessert product which is extrudable by hand from a collapsible package at temperatures between 0° F. and 10° F., said product having an equilibrium melting temperature (T_m) between −3° C. and −10° C. and said product having a water content of from 45% to 63% by weight, a fat content of from 3% to 15% by weight, a protein content of from 2% to 10% by weight and a total carbohydrate level of from 24% to 34%, said carbohydrate level including amounts of monosaccharides, disaccharide and higher saccharides such that the ratio of higher saccharides to mono- and disaccharides (Ratio 1) and the ratio of disaccharides to monosaccharides (Ratio 2) satisfy the relationship of $7 \leqq (28 \times \text{Ratio 1}) + \text{Ratio } 2 \leqq 28$.

4,374,155
YOGURT MILK SHAKE
Robert S. Igoe, and Richard J. Taylor, both of San Diego, Calif., assignors to Merck & Co. Inc., Rahway, N.J.
Filed Mar. 2, 1981, Ser. No. 239,747
Int. Cl.[3] A23C *9/13, 9/137, 23/00*
U.S. Cl. 426—569 **7 Claims**

1. A yogurt milk shake composition comprising:

(a) 73 to 99.45wt.% of yogurt and milk in the range yogurt:milk 80:20 to 53:47;

(b) 0.5 to 2.5 wt. % of a soya protein whipping agent; and

(c) 0.05% to 0.5 wt. % of a stabilizer which consists essentially of CMC and xanthan gum.

4,374,156
METHOD FOR OBTAINING A COATING OF A PREFERRED COMPOSITION ON A SURFACE OF A GLASS SUBSTRATE
Sandy T. S. Vong, Ann Arbor, Mich., assignor to Ford Motor Company, Dearborn, Mich.
Filed Nov. 30, 1981, Ser. No. 325,624
Int. Cl.[3] B05D *1/12, 3/00;* **C03C** *17/23*
U.S. Cl. 427—8 **4 Claims**

1. A method for obtaining a preferred multi-component metallic oxide coating on a surface of a glass substrate by pyrolytic coating techniques in which a heat decomposable, non-homogeneous, dry powder mixture of organic based metallic salts are sprayed against said surface of said glass substrate while said surface is a temperature of at a range from 700° F. to 1200° F., which method comprises the steps of:

selecting a preferred composition for a multi-component metallic oxide coating for said surface of said glass substrate;

forming a plurality of testing samples of said non-homogeneous, dry powder mixture, each sample having a different composition of said multi-component organic based metallic salts;

spraying under identical condition individual test specimens of glass substrates with individual test samples of said dry powder mixture, thereby to form a plurality of coated test specimens, each coated test specimen having a different composition of a metallic oxide coating thereon;

analyzing each of said coated test specimens to determine the chemical composition of said coating thereon;

determining which coated test specimen has a coating thereon of said preferred composition; and

spraying commercial quantities of glass under the same spraying conditions used to spray said test specimens, said commercial spraying being carried out with the dry powder mixture having the composition which produced said preferred composition on said coated test specimen.

4,374,157
PROCESS FOR GASEOUSLY OPALIZING BULBS
Jean-Paul Barbier, Fontenay-le-Fleury, and Gilbert Lerouyer, Orgerus, both of France, assignors to L'Air Liquide, Paris, France
Filed Aug. 28, 1981, Ser. No. 297,366
Claims priority, application France, Sep. 10, 1980, 80 19503
Int. Cl.³ B05D *3/04, 7/22;* **C03C** *17/345*
U.S. Cl. 427—37 **10 Claims**

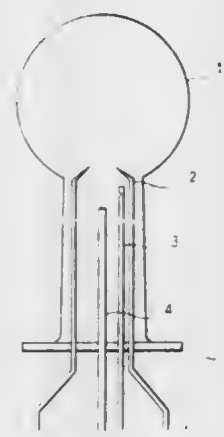

1. A process of gaseously opalizing a bulb comprising forming and depositing silica on the inside of the bulb by oxidation of silane with oxygen by means of an electric arc, said silane being diluted to a concentration of 0.1 to 3% by volume in a gas inert in regard to the silane.

4,374,158
PROCESS FOR PRODUCING TRANSPARENT SHAPED ARTICLE HAVING ENHANCED ANTI-REFLECTIVE EFFECT
Takashi Taniguchi, Shiga, and Jiro Mibae, Otsu, both of Japan, assignors to Toray Industries, Inc., Tokyo, Japan
Filed Nov. 10, 1980, Ser. No. 205,346
Claims priority, application Japan, Nov. 14, 1979, 54-146485; Sep. 4, 1980, 55-121745
Int. Cl.³ B05D *3/14*
U.S. Cl. 427—41 **19 Claims**

1. A process for producing a transparent shaped article having an enhanced anti-reflective effect, said article either being an organic material or having a coating of organic material thereon which comprises treating with an activated gas the surface of a transparent shaped article, said surface layer comprising a finely divided particulate inorganic substance having an average particle size of from about 1 to about 300 millimicrons dispersed in said organic material.

4,374,159
FABRICATION OF FILM CIRCUITS HAVING A THICK FILM CROSSUNDER AND A THIN FILM CAPACITOR
Raymond C. Pitetti, Wescosville, and John Rutkiewicz, Center Valley, both of Pa., assignors to Bell Telephone Laboratories, Incorporated, Murray Hill, N.J.
Filed Jul. 27, 1981, Ser. No. 287,418
Int. Cl.³ H05K *3/12*
U.S. Cl. 427—96 **13 Claims**

1. A method of fabricating a film circuit on an insulating substrate (10) comprising the steps of:

forming a thick film electrode (11) on one portion of said substrate;

depositing and firing at least one dielectric layer (12) on a portion of said electrode and depositing and firing at least one layer capable of smoothing irregularities of the substrate on a portion of the substrate remote from said electrode where a capacitor (22) is to be formed, the firing of each such layer being such as not to melt a previously deposited layer;

subsequent to formation of said layers forming a first metal layer (14) over essentially the entire substrate including said layers and said thick film electrode;

removing a portion of said metal layer from an area (21) of the thick film electrode to accommodate an electrical contact thereto;

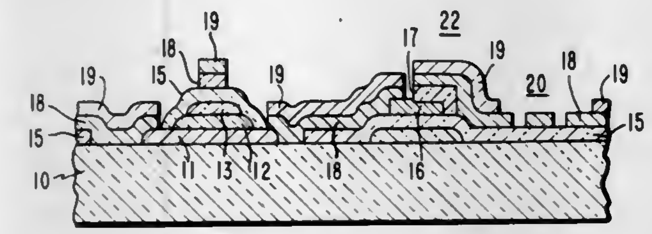

oxidizing the metal layer to form a protective oxide layer (15); and

forming over said oxide layer at least one thin film capacitor (22), and a thin film conductor (19) electrically coupled to the thick film electrode.

4,374,160
METHOD OF MAKING A NON-LINEAR VOLTAGE-DEPENDENT RESISTOR
Nobuyuki Yoshioka, Fujisawa; Tsutai Suzuki, Tokyo; Masanori Haba, Kashiwa, and Hideo Koyama, Tokyo, all of Japan, assignors to Kabushiki Kaisha Meidensha, Tokyo, Japan
Filed Mar. 18, 1981, Ser. No. 245,147
Int. Cl.³ B05D *5/12;* **H01C** *7/10*
U.S. Cl. 427—101 **23 Claims**

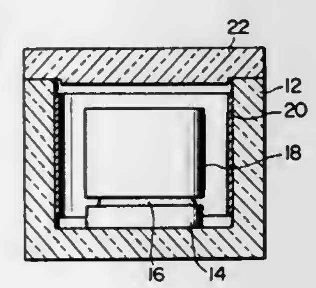

1. A method of making a non-linear voltage-dependent resistor containing a ZnO element including zinc oxide as its major component wherein the improvement comprises the step of forming a layer comprised of high insulating material due to a vapor-solid reaction in an atmosphere of a vaporizable molecular compound which reacts with the zinc oxide at a sintering temperature.

4,374,161
PRESSURE COATING OF FIBERS
Franz T. Geyling, Morristown, and Theodore J. Louzon, Bridgewater, both of N.J., assignors to Bell Telephone Laboratories, Incorporated, Murray Hill, N.J.
Filed Apr. 24, 1981, Ser. No. 257,354
Int. Cl.³ B05D *1/18, 7/20;* **G02B** *1/10, 5/14*
U.S. Cl. 427—160 **6 Claims**

1. A method of making a coated fiber by steps comprising applying a coating layer to a bare fiber or to an intermediate coated layer thereon,

characterized in that said coating layer is applied by directing under pressure a fluid coating material substantially radially inward towards said fiber while said fiber passes through a passage in a chamber, with the substantially radial flow of coating fluid being maintained over a length of the fiber of at least 0.5 inches, wherein said pressure is sufficient to prevent the meniscus of said fluid from substantially extending into said passage, and wherein the diameter of said passage is sufficiently large to substantially prevent said fiber from contacting the sides of said passage.

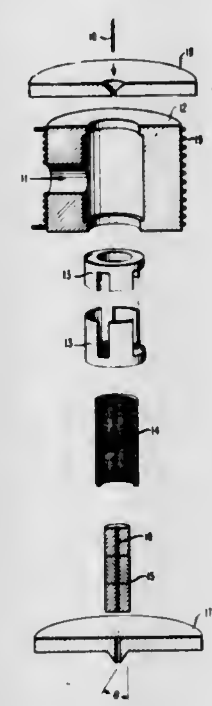

4,374,162
THIN-FILM DEPOSITION
Toshinori Takagi, Nagaokakyo, Japan, assignor to Futaba Denshi Kogyo Kabushiki Kaisha, Chiba, Japan
Continuation of Ser. No. 705,512, Jul. 14, 1976, abandoned. This application Apr. 15, 1980, Ser. No. 140,596
Claims priority, application Japan, Jul. 15, 1975, 50-86974
The portion of the term of this patent subsequent to Oct. 14, 1997, has been disclaimed.
Int. Cl.³ C23C *13/00*
U.S. Cl. 427—248.1 **6 Claims**

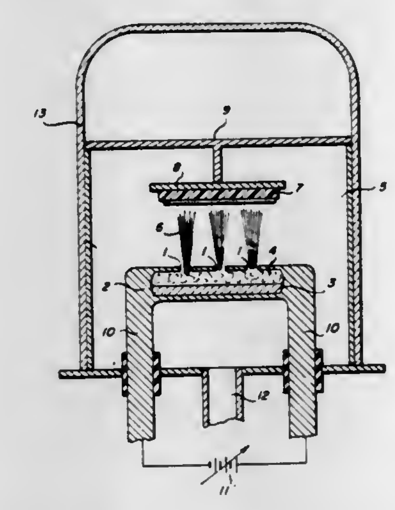

1. A film deposition method comprising the steps of:

heating and vaporizing a material within a crucible of the sealed type having one or more ejection nozzles;

ejecting the resulting vapor of the material via the ejection nozzles to a vacuum region such that atom aggregates or clusters tied by van der Waals force are formed through an adiabatic expansion to attain a supercooled state, the vacuum region adapted to accommodate a substrate therein;

maintaining a vapor pressure in the vacuum region such that vapor particles of the material advance toward the substrate without collision with residual gas particles or the like within the vacuum region;

depositing said clusters of atomic particles on said substrate, wherein said clusters are broken up upon striking the substrate which contributes to growth of the deposition due to migration of the material particles; and

controlling the ejection velocity by varying the heating temperature of said crucible and varying the pressure differential between the pressure in said crucible and the pressure in said vacuum region for the purpose of controlling fine structures of films deposited onto the substrate wherein kinetic energy obtained during the ejection step, which has an important effect upon the fine structures of the deposited films, is controllable within a wide range.

4,374,163
METHOD OF VAPOR DEPOSITION
Arnold O. Isenberg, Forest Hills Boro., Pa., assignor to Westinghouse Electric Corp., Pittsburgh, Pa.
Filed Sep. 29, 1981, Ser. No. 307,139
Int. Cl.³ C23C *11/00*
U.S. Cl. 427—253 **12 Claims**

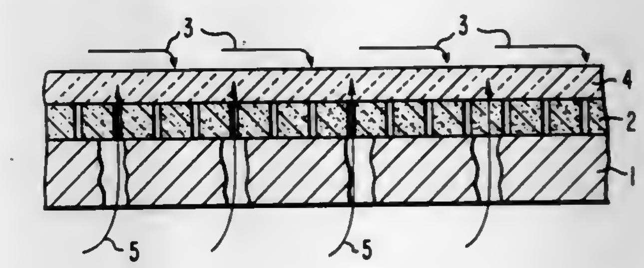

1. A method of forming a dense layer of a polycrystalline metal M according to the reaction

$$MX_n + mR \rightarrow M + mRX_{\frac{n}{m}}$$

where M is selected from the group consisting of elements of periodic table groups III, IV, and V and mixtures thereof, each X is independently selected from the group consisting of chlorine, bromine, and iodine, R is selected from the group consisting of hydrogen, elements of periodic table groups I and II to atomic number 30, and mixtures thereof, n is the valence of M, and m is n/valence of R, comprising

(A) heating an inert substrate which separates said mR from said MX_n and which is permeable by said mR, to a temperature high enough to vaporize said

$$mRX_{\frac{n}{m}},$$

(B) heating said mR on one side of said substrate sufficiently to diffuse it through said substrate; and

(C) heating said MX_n on the other side of said substrate sufficiently to vaporize it.

4,374,164
HIGH SOLIDS POLYMER RESIN COATING COMPOSITION CONTAINING AMINO RESIN CROSS-LINKING AGENT
Werner J. Blank, Wilton, Conn., assignor to American Cyanamid Company, Stamford, Conn.
Filed Dec. 14, 1981, Ser. No. 330,422
Int. Cl.³ B05D *3/02*
U.S. Cl. 427—385.5 **13 Claims**

1. A high solids polymer resin coating composition possessing improved intercoat adhesion comprising a low molecular weight resin selected from the group consisting of acrylic resin, polyester resin and mixtures thereof and a predominantly monomeric poly(methoxy isobutoxy methyl) melamine resin cross-linking agent.

13. A process of coating a substrate by application of a high solids polymer resin coating composition, curing of the compo-

sition and recoating with the same high solids polymer resin coating composition, the improvement providing a coating of improved intercoat adhesion therein wherein the coating composition is one as claimed in claims 1, 2, 3, 7, 8, 9, 11 or 12.

4,374,165
LIQUID ADHESIVE APPLICATOR
John L. Mortoly, Poughkeepsie, N.Y., assignor to James L. Taylor Mfg. Co., Poughkeepsie, N.Y.
Filed Jun. 25, 1981, Ser. No. 277,227
Int. Cl.³ B05D *1/18;* C09J *5/02;* B05G *1/00*
U.S. Cl. 427—430.1 **12 Claims**

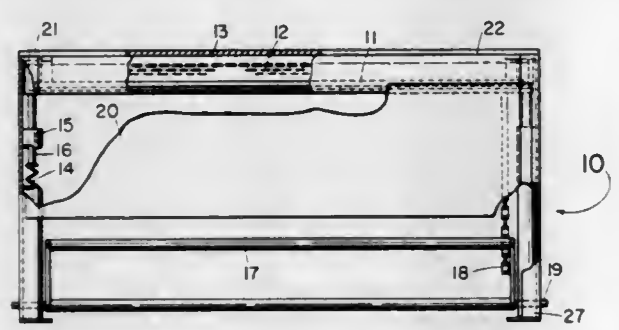

8. A method of applying liquid adhesive to a work-piece comprising the steps of:
immersing a stationary support member in a reservoir containing a liquid adhesive;
moving the reservoir relative to the support member to expose the same;
allowing excess liquid adhesive to drain through the apertures in the support member, and;
thereafter placing the work-piece in contact with the support member to apply adhesive thereto.

4,374,166
AMORPHOUS, DRAWN, CUP-LIKE THERMOPLASTIC PET ELEMENT OF 10–25% CRYSTALLINITY AND MONOAXIAL ORIENTATION IN SIDE WALL
Kjell M. Jakobsen, Skanör, and Claes T. Nilsson, Löddeköpinge, both of Sweden, assignors to PLM Aktiebolag, Malmo, Sweden
Filed May 30, 1980, Ser. No. 154,889
Claims priority, application Sweden, Jun. 11, 1979, 7905042
Int. Cl.³ B65D *00/00*
U.S. Cl. 428—35 **16 Claims**

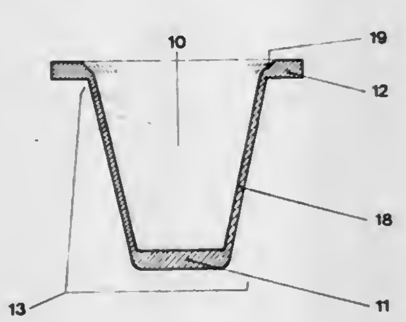

1. An element formed from a blank of amorphous PET having a crystallinity of less than 10%, said element comprising an annular edge part and a depressed portion extending from said edge part and surrounded by said edge part, said depressed portion being of cup-like shape, said edge part forming a rim for said depressed portion of cup-like shape, said edge part consisting of substantially undrawn, amorphous, PET having a crystallinity of less than 10%, said depressed portion including an annular wall portion of uniform thickness consisting of PET drawn at an initial temperature below Tg and having one-third the thickness of the amorphous blank and undergone material flow to provide crystallinity of between 10 and 25% with a monoaxial orientation, said annular wall portion having a smaller thickness than said annular edge part.

4,374,167
VAPOR PERMEATION CURABLE POLYESTER RESIN COATING COMPOSITIONS FOR FLEXIBLE SUBSTRATES
James R. Blegen, Worthington, Ohio, assignor to Ashland Oil, Inc., Dublin, Ohio
Division of Ser. No. 216,323, Dec. 15, 1980, Pat. No. 4,343,839. This application Apr. 5, 1982, Ser. No. 365,603
Int. Cl.³ B32B *3/26, 27/40;* C08G *18/42;* B05D *3/10*
U.S. Cl. 428—141 **14 Claims**

1. A composite article comprising a flexible substrate having an adherent cured film of a curable coating composition thereon, said film at a thickness of between about 0.1 and 0.5 mils possessing a flexibility sufficient for a O-T bend on metal and a mar resistance of at least about 2000 gms as borne by the edge of a nickel passed over said cured film, said film being the cured residue of said coating composition after exposure to a vaporous tertiary amine catalyst, said coating composition comprising:
(A) an aromatic hydroxyl-functional condensation product having an acid number of less than about 10 and made by condensing the following ingredients in the indicated molar proportions or double thereof except for the phenolic-functional carboxylic acid:
(1) between about 1 and 2 moles of a C_2-C_{12} linear aliphatic dibasic acid,
(2) between about 1 and 2 moles of an ortho or meta aromatic dicarboxylic acid or anhydride thereof,
(3) between about 1 and 4 moles of a C_2-C_6 alkylene glycol,
(4) between about 1 and 2 moles of a sterically hindered diol,
(5) between about 1 and 2 moles of a mono-epoxide or diol having a pendant C_8–C_{22} hydrocarbyl group, and
(6) between about 1 and 2 moles of a phenolic-functional carboxylic acid;
(B) a multi-isocyanate comprising:
(1) between about 10 and 80 percent by weight of an aromatic multi-isocyanate, and
(2) between about 90 and 20 percent by weight of an aliphatic multi-isocyanate;
(C) a volatile oganic solvent for such condensation product and for said multi-isocyanate, and
(D) a mar-resisting agent of an organic compound physically incompatible in said coating composition and having an effective chain length of at least about 12 carbon atoms;
the ratio of aromatic hydroxyl equivalents of said condensation product to the isocyanate equivalents of said multi-isocyanate being between about 1:1 and 1:1.7, said condensation product containing substantially no aliphatic hydroxyl groups, and said condensation product having a phenol functionality of at least 2.

9. A flexible coated substrated prepared by the method which comprises:
(I) applying said coating composition to said flexible substrate, said coating composition having a pot life of at least about 4 hours in an open pot and comprising:
(A) an aromatic hydroxyl-functional condensation product having an acid number of less than about 10, having an aromatic hydroxy-functionality of at least 2, and containing substantially no aliphatic hydroxyl groups, said condensation product made by condensing the following ingredients in the indicated molar proportions or double thereof except for the phenol-functional carboxylic acid:
(1) between about 3 and 8 moles of a mixture of diols which include a sterically hindered diol, and a diol or mono-epoxide which provides a pendant C_8–C_{22} hydrocarbyl group; and
(2) between about 3 and 6 moles of a mixture of a linear aliphatic dibasic acid and an ortho or meta aromatic dicarboxylic acid, and a phenol-functional carboxylic acid having at least one carbon atom between said phenol group and said carboxyl group;
(B) a multi-isocyanate cross-linking agent comprising a mixture of between about 10% and 80% by weight of an aromatic multi-isocyanate and between about 90% and 20% by weight of an aliphatic multi-isocyanate, wherein the ratio of aromatic hydroxyl equivalents from said condensation product to the isocyanate equivalents of said multi-isocyanate ranges from between about 1:1 and 1:1.7;
(C) a volatile organic solvent for said condensation product and for said multi-isocyanate; and
(D) a mar-resisting agent of an organic long chain fatty compound physically incompatible in said coating composition and having an effective chain length of at least 12 carbon atoms;
(II) exposing said coated flexible substrate to a vaporous tertiary amine catalyst to rapidly cure said coating at about room temperature;
said cured coating having a film thickness of between about 0.1 and about 0.5 mils;
said cured film of said coating composition possessing a flexibility sufficient for a zero-T bend on metal and a mar resistance of at least about 2,000 grams as borne by the edge of a nickel passed over said cured film.

12. The flexible coated substrate of claim 9 or 11 wherein said cured film on said flexible coated substrate is heat-embossed.

4,374,168
METALWORKING LUBRICATION
Wesley J. Wojtowicz, Fraser, Mich., assignor to The H. A. Montgomery Co., Inc., Detroit, Mich.
Filed Nov. 6, 1981, Ser. No. 318,849
Int. Cl.³ B32B *7/02;* B05D *1/18;* B21B *45/02;* B32B *15/04*
U.S. Cl. 428—212 **19 Claims**

7. A sheet metal workpiece which is to be subsequently worked to fabricate articles therefrom including a metal surface having applied thereto a layer of a metalworking lubricant composition, said metalworking lubricant composition consisting essentially of a dispersion of from about 2 to about 20 parts by weight of a liquid polar lubricant having a viscosity of at least 1,000 cSt at 20° C. constituting a discontinuous phase in 100 parts of an anhydrous hydrocarbon liquid vehicle having a viscosity no higher than 100 cSt at 20° C., said hydrocarbon liquid vehicle being one in which said polar lubricant is normally substantially insoluble and immiscible, said dispersion containing at least one emulsifying agent in a total amount sufficient to stabilize the dispersion for application to a metal surface but insufficient to prevent separation of the discontinuous phase from said vehicle upon application of the dispersion to a metal surface as a layer having a thickness up to about 500 microinch.

4,374,169
ABRASION RESISTANT, REINFORCED SCREEN PANEL MEMBER
Gregory A. Gryskiewicz, North St. Paul, and Raymond A. Koehler, Anoka, both of Minn., assignors to UOP Inc., Des Plains, Ill.
Filed Sep. 14, 1981, Ser. No. 301,546
Int. Cl.³ B32B *7/00*
U.S. Cl. 428—221 **13 Claims**

1. A reinforced, abrasion resistant screen member for use in either a vibrating or non-vibrating type screen apparatus comprising a first plurality of closely spaced elongated profiled surface wires arranged parallel to each other and in a plane so as to define elongated slots between the wires which have a width less than the width of the wires, each of said first plurality of wires including a rigid core portion having a flexural modulus of elasticity of at least 100,000 p.s.i. and a layer of a less rigid thermoplastic, abrasion resistant material extruded over it and in intimate bonded relationship to it; a second plurality of less closely spaced elongated support rods positioned in a plane and arranged parallel to each other and transverse to said first plurality of wires, each of said second plurality of support rods including a rigid core portion having a flexural modulus of elasticity of at least 100,000 p.s.i. and a layer of a less rigid thermoplastic, abrasion resistant material

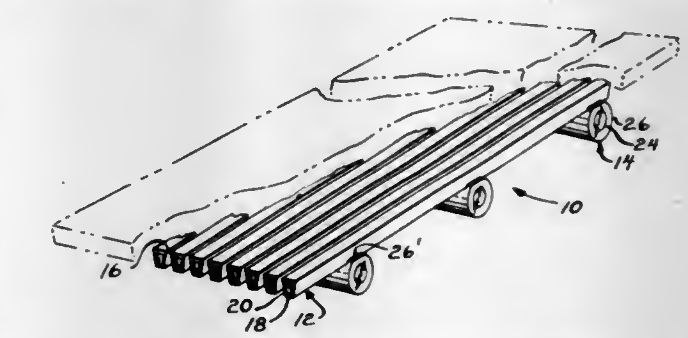

extruded over it and in intimate bonded relationship to it, said first plurality of wires and said second plurality of rods having portions of their layers of thermoplastic abrasion resistant material fused together in overlapping relationship at every intersection, the cores of said wires and rods being unfused and spaced from each other at every intersection, and the dimension of the open spaces between adjacent screen rods being at least 10 times the width dimension of the slots defined by the surface wires.

4,374,170
ROOM TEMPERATURE CURE POLYESTER LAMINATES
Donald G. Fesko, Allen Park, Mich., assignor to Ford Motor Company, Dearborn, Mich.
Filed Nov. 9, 1981, Ser. No. 319,535
Int. Cl.³ D03D *3/00*
U.S. Cl. 428—224 **50 Claims**

1. A composition of matter comprising the product of an amassment of
(A) a first array of filaments impregnated with a first resin system comprising (a) thermosetting resin, (b) first curing agent for said resin and (c) first accelerator that is effective to promote a second curing agent for said resin and is substantially ineffective to promote said first curing agent; and
(B) a second array of filaments impregnated with a second resin system comprising (d) said resin, (e) said second curing agent and (f) second accelerator that is effective to promote said first curing agent and is substantially ineffective to promote said second curing agent;
wherein said amassment provides substantial contact, one array with the other.

4,374,171
SMOLDER AND FLAME RESISTANT INSULATION MATERIALS, COMPOSITION AND METHOD
Robert J. McCarter, Gaithersburg, Md., assignor to The United States of America as represented by the Secretary of Commerce, Washington, D.C.
Continuation-in-part of Ser. No. 51,922, Jun. 25, 1979, abandoned, which is a continuation of Ser. No. 870,385, Jan. 18, 1978, abandoned. This application Oct. 19, 1981, Ser. No. 313,045
Int. Cl.³ D04H *1/58*
U.S. Cl. 428—288 **35 Claims**

1. A flame and smolder resistant cellulosic insulation material comprising:
a cellulosic fibrous mass of sufficiently low density to provide insulating effects,
from about 2% to about 9% elemental sulfur based on the weight of the cellulosic fibrous mass, and

from about 10% to about 25% flame retardant based on the weight of the cellulosic fibrous mass.

4,374,172
SOUND INSULATING MATERIAL

Herwig. J. Schwarz, Walldorf; Hans-Jürgen H. Burde, Neckargemund-Waldhilsbach, and Günter Minet, Heidelberg, all of Fed. Rep. of Germany, assignors to Teroson GmbH, Heidelberg, Fed. Rep. of Germany

Continuation of Ser. No. 968,872, Dec. 12, 1978, abandoned. This application Aug. 29, 1980, Ser. No. 182,543

Claims priority, application Fed. Rep. of Germany, Dec. 19, 1977, 2756622

Int. Cl.³ B32B *5/14, 5/18, 5/22, 7/02*

U.S. Cl. 428—308.4 8 Claims

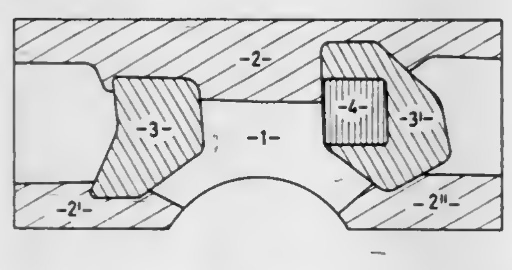

1. A sound insulating material for application to structures to be acoustically insulated, which structures possess areas oscillating at differing frequencies and therefore present differing acoustic requirements, said insulating material consisting of a single, non-laminated layer of an open-pored foam or a layer of open-pored foam having a coating of textile material laminated to one or both surfaces thereof, said layer of foam being impregnated prior to application to said structures with a viscoelastic material so that said viscoelastic material penetrates the pores of the foam, said impregnation being in a non-uniform manner across at least one surface of said foam such that the quantity of said viscoelastic material across said surface varies in accordance with said differing acoustic requirements of said structures, said non-uniform impregnation further being in a planned manner such that upon application to said structures, the areas of said foam containing the greater quantities of said viscoelastic material correspond to the areas of said structures requiring greater sound damping, said viscoelastic material impregnating compound having different chemical compositions in individual areas in and on the surface of said foam.

4,374,173
COMPOSITE POWDERS SPRAYABLE TO FORM ABRADABLE SEAL COATINGS

Emilija Adamovic, Willowdale, Canada, assignor to Sherritt Gordon Mines Limited, Toronto, Canada

Division of Ser. No. 91,870, Nov. 6, 1979, Pat. No. 4,291,089. This application Dec. 4, 1980, Ser. No. 212,781

The portion of the term of this patent subsequent to Sep. 22, 1998, has been disclaimed.

Int. Cl.³ B05D *1/10;* B32B *5/16*

U.S. Cl. 428—325 22 Claims

1. A composite powder sprayable by thermal spraying onto a substrate to form an abradable seal coating, said powder comprising particles each having a core of non-metallic solid material surrounded by a layer of nickel-chromium-aluminum

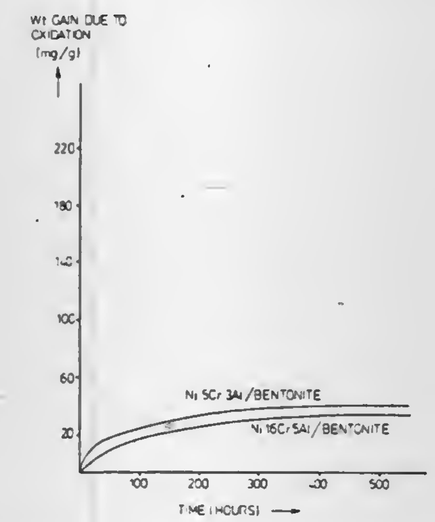

alloy containing from about 4 to about 8% by weight chromium and from about 2 to about 6% by weight aluminum.

4,374,174
COMPOSITION AND SHEET MATERIALS FOR INHIBITING CORROSION OF METALS

Hazel R. Stricklin, and George W. Morrow, Jr., both of Cullman, Ala., assignors to Daubert Industries, Inc., Oak Brook, Ill.

Filed Feb. 12, 1981, Ser. No. 234,092

Int. Cl.³ B32B *15/10, 15/12;* B65B *11/00*

U.S. Cl. 428—341 16 Claims

7. An article of manufacture which acts as a contact and a vapor phase inhibitor for inhibiting the corrosion of metals comprising a solid carrier in sheet form having incorporated therein as an essential active ingredient an alkali metal salt of sorbic acid.

9. An article according to claim 7 wherein the active ingredient is present in a concentration of from about 0.1 to about 10 grams per square foot of surface area of the solid carrier.

4,374,175
NOVEL WATER-SWELLABLE FIBERS AND PROCESS FOR PRODUCING THE SAME

Koji Tanaka, Okayama, Japan, assignor to Japan Exlan Co., Ltd., Osaka, Japan

Division of Ser. No. 87,951, Oct. 24, 1979, abandoned. This application May 21, 1981, Ser. No. 266,055

Claims priority, application Japan, Jan. 16, 1979, 54/4277

The portion of the term of this patent subsequent to Nov. 6, 1999, has been disclaimed.

Int. Cl.³ D02G *3/00*

U.S. Cl. 428—369 6 Claims

1. Water-swellable acrylonitrile polymer fibers which contain salt-type carboxyl groups represented by the formula —COOX wherein X is an alkali-metal or NH_4 in an amount of from 0.1 to 4.0 mol/g, and which are produced by treating acrylonitrile polymer fibers having latent or visualized crimps with (a) an aqueous alkali-metal hydroxide solution of a high concentration not less than 6.0 mol/1000 g solution or (b) an aqueous alkali-metal hydroxide solution of a low concentration coexisting with an electrolytic salt of a concentration not less than 0.5 mol/1000 g solution thus rendering the outer layer portion of said fibers hydrophilic and cross-linked, wherein at least a part of the fiber outer layer portion is composed of a hydrogel and the remainder is composed of an acrylonitrile polymer and/or another polymer, the resultant fibers having latent or visualized crimps and combining a high degree of water-swellability of 3 to 300 cc/g with excellent physical properties.

4,374,176
MODIFIER FOR FIBERS OR FIBROUS STRUCTURES AND MODIFIED FIBERS OR FIBROUS STRUCTURES

Kiyoshi Aoki, Osaka, and Saburo Ohara, Kyoto, both of Japan, assignors to Kanebo, Ltd., Tokyo and Kanebo Synthetic Fibers Ltd., Osaka, both of, Japan

Division of Ser. No. 161,717, Jun. 20, 1980, Pat. No. 4,309,560. This application Sep. 25, 1981, Ser. No. 305,419

Claims priority, application Japan, Nov. 26, 1979, 54/153268

Int. Cl.³ D02G *3/00*

U.S. Cl. 428—392 17 Claims

1. Modified fibers or fibrous structures obtained by applying to fibers or fibrous structures a treating liquid, which contains a compound represented by the general formula (I)

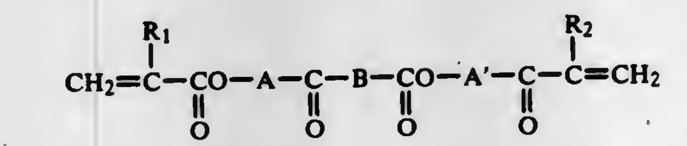

(I)

wherein R_1 and R_2 represents H or CH_3; A and A' represent

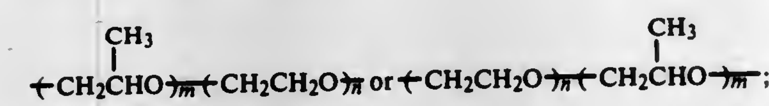

B represents

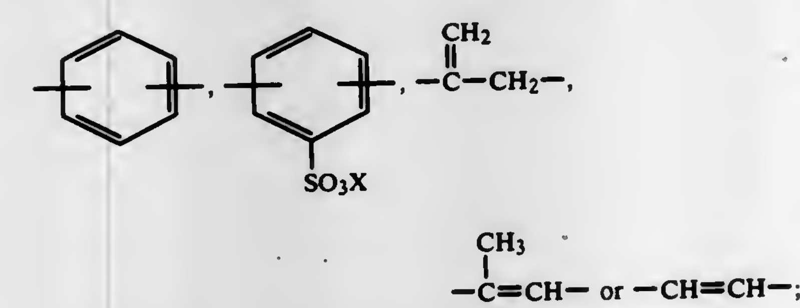

X represents H, NH_4 or an alkali metal; and m and n represent numerals determined by the following formulae, $0 \leqq m \leqq 25$, $5 \leqq n \leqq 50$ and $5 \leqq (m+n) \leqq 50$, and heat treating the above treated fibers or fibrous structures, the amount of said compound adhering to the fibers or fibrous structure being at least 0.5% by weight based on the weight of the fibers.

4,374,177
AQUEOUS SIZING COMPOSITION FOR GLASS FIBERS AND SIZED GLASS FIBERS FOR THERMOPLASTIC REINFORCEMENT

Ed C. Hsu, Pittsburgh; L. Dow Moore, Allison Park, and Chester S. Temple, McKees Rocks, all of Pa., assignors to PPG Industries, Inc., Pittsburgh, Pa.

Filed Dec. 24, 1981, Ser. No. 334,203

Int. Cl.³ B32B *9/00*

U.S. Cl. 428—392 28 Claims

1. An aqueous sizing composition for glass fibers used for reinforcing polymers, comprising:

a. a polyurethane polymer,
b. a epoxy polymer,
c. a polyethylene-containing polymer,
d. wax where the weight ratio of the polyethylene-containing polymer to wax is in the range of about 25 to 1 to about 1 to 25, and
e. an amino silane coupling agent, and
f. water in an amount to give a total solids content for the composition in the range of about 1 to about 30 weight percent.

4,374,178
SILANATED CALCIUM CARBONATE FILLERS

Ravindra D. Kulkarni, Milpitas, Calif., and Errol D. Goodard, Haworth, N.J., assignors to Union Carbide Corporation, Danbury, Conn.

Filed Dec. 29, 1980, Ser. No. 220,280

Int. Cl.³ B32B *5/16*

U.S. Cl. 428—404 2 Claims

1. A calcium carbonate filler composition which comprises a mixture of

(I) particulate calcium carbonate,
(II) sodium silicate, and
(III) a silane having the formula

$$R(R^1)_aSi(X)_{3-a}$$

wherein R which contains a carbon atom directly bonded to the silicon atom of the above formula represents an organic radical, R^1 represents a radical selected from the group consisting of R and monovalent hydrocarbon radicals, a has a value of 0 or 1, and X represents a hydrolyzable group, the hydrolyzates of said silanes, the condensates of said silanes, and mixtures thereof,

which composition has been heated to a temperature in the range 100° C. to 140° C. for a period of time in the range one to eight hours.

4,374,179
PLASMA POLYMERIZED ETHANE FOR INTERLAYER DIELECTRIC

Jacob W. Lin, Bloomington, and Leslie S. Weinman, Eden Prairie, both of Minn., assignors to Honeywell Inc., Minneapolis, Minn.

Filed Dec. 18, 1980, Ser. No. 217,645

Int. Cl.³ B32B *9/04, 27/32;* B05D *3/06*

U.S. Cl. 428—411 9 Claims

1. A multilyer solid state device which comprises:

a substrate;
a conductive area deposited on said substrate; and,
a dielectric layer of plasma polymerized ethane (PPE) deposited over said conductive area.

4,374,180
METHOD FOR MODIFICATION OF THE SURFACE OF INDUSTRIAL RUBBER ARTICLES

Rudolf A. Gorelik, ulitsa Sumskaya, 6, korpus 4, kv. 2; Evgeny A. Dukhovskoi, prospekt Vernadskogo, 127, kv. 467; Alexandr M. Kleiman, naberezhnaya M.Gorkogo, 40/42, kv. 244; Nikolai A. Kleimenov, Leninsky prospekt, 57, kv. 125; Andrei M. Markevich, ulitsa Vavilova, 55/7, kv. 15, all of Moscow; Ardalion N. Ponomarev, ulitsa Tretia, 2, kv. 3, Moskovskaya oblast, Noginsky raion, p/o Chernogolovka; Askold A. Silin, prospekt Vernadskogo, 93, kv. 95, Moscow; Valentina M. Skok, prospekt Vernadskogo, 93, kv. 94, Moscow; Viktor L. Talroze, Vorobievskoe shosse, 11, kv. 21, Moscow; Anatoly V. Khomyakov, ulitsa Studencheskaya, 30, stroenie 2, kv. 2, Moscow, and Andrei Y. Lyapunov, ulitsa Dmitria Ulyanova, 1/61, kv. 141, Moscow, all of U.S.S.R.

Filed Sep. 25, 1980, Ser. No. 190,798

Claims priority, application U.S.S.R., Sep. 25, 1979, 2810498

Int. Cl.³ B05D *3/06*

U.S. Cl. 428—421 6 Claims

1. A method for modifying the surface of industrial rubber articles to reduce the coefficient of friction comprising the sequential steps of:

placing said articles into a vacuum chamber and treating them at a residual air pressure below 1 Pa, in the presence of ionizing radiation in the form of an electric glow discharge created in said vacuum chamber; and then
contacting the surface of said industrial rubber articles with a polymer layer by admitting into said chamber, vapors of an ester of methacrylic acid or acrylic acid, and a fluori-

nated alcohol at a pressure in the chamber ranging from 10 to 10,000 Pa simultaneously with the treatment of said articles in said electric glow discharge for a period of about 0.5 to 2 hours.

4,374,181
VAPOR PERMEATION CURABLE COATINGS FOR REACTION INJECTION MOLDED PARTS
James R. Blegen, Worthington, Ohio, assignor to Ashland Oil, Inc., Dublin, Ohio
Filed Sep. 14, 1981, Ser. No. 302,185
Int. Cl.³ B05D *3/10*
U.S. Cl. 428—423.3 **32 Claims**

1. A coating composition rapidly curable at room temperature in the presence of vaporous tertiary amine catalyst and possessing a pot life of at least about 4 hours in an open pot, comprising:
(1) an aromatic hydroxyl-functional condensation product made by condensing the following ingredients:
(a) a linear aliphatic dibasic acid;
(b) a linear aliphatic glycol,
where the sum of the methylene groups of (a) and (b) is between 10 and 13 and where up to about one-half of (a) or (b) can be replaced with a C_6–C_8 cycloaliphatic dibasic acid or diol;
(c) the combination of a linear aliphatic glycol and aromatic dicarboxylic acid, or a bis(hydroxyalkyl) adduct of an aromatic diol and a linear aliphatic dicarboxylic acid,
(d) a phenol capping agent,
where said condensation product (1) has a molecular weight of between about 1,000 and 4,000 an equivalent (solids) weight of between about 250 and 1,000, and substantially no aliphatic hydroxyl groups;
(2) a multi-isocyanate curing agent;
(3) a volatile organic solvent for said aromatic hydroxyl-functional condensation product and for said multi-isocyanate curing agent,
the ratio of aromatic hydroxyl equivalents of said condensation product to the isocyanate equivalents of said multi-isocyanate being between about 1:1 and 1:2.

18. A method for coating a substrate with a film of a coating composition rapidly curable at room temperature in the presence of a vaporous tertiary amine catalyst and possessing a pot life of at least about 4 hours in an open pot, which comprises:
(A) applying a film of said coating composition to said substrate, said coating composition comprising:
(1) an aromatic hydroxyl-functional condensation product made by condensing the following ingredients:
(a) a linear aliphatic dibasic acid;
(b) a linear aliphatic glycol,
where the sum of the methylene groups of (a) and (b) is between 10 and 13 and where up to about one-half of (a) or (b) can be replaced with a C_6–C_8 cycloaliphatic dibasic acid or diol;
(c) the combination of a linear aliphatic glycol and aromatic dicarboxylic acid, or an aromatic diol and a linear aliphatic dicarboxylic acid,
(d) a phenol capping agent,
where said condensation product (1) has a molecular weight of between about 1,000 and 4,000, an equivalent (solids) weight of between about 250 and 1,000, and substantially no aliphatic hydroxyl groups;
(2) a multi-isocyanate curing agent;
(3) a volatile organic solvent for said aromatic hydroxyl-functional condensation product and for said multi-isocyanate curing agent,
the ratio of aromatic hydroxyl equivalents of said condensation product to the isocyanate equivalents of said multi-isocyanate being between about 1:1 and 1:2,
(B) exposing said coated substrate to a vaporous tertiary amine catalyst to rapidly cure said coating at about room temperature.

27. A composite article comprising a substrate selected from reaction injection molding urethane and upholstery vinyl having an adherent cured film of a curable coating composition thereon, said film at a thickness of between about 1 and 4 mils, said film being the cured residue of said coating composition after exposure to a vaporous tertiary amine catalyst, said coating composition comprising:
(1) an aromatic hydroxyl-functional condensation product made by condensing the following ingredients:
(a) a linear aliphatic dibasic acid;
(b) a linear aliphatic glycol,
where the sum of the methylene groups of (a) and (b) is between 10 and 13 and where up to about one-half of (a) or (b) can be replaced with a C_6–C_8 cycloaliphatic dibasic acid or diol;
(c) the combination of a linear aliphatic glycol and aromatic dicarboxylic acid, or a bis(hydroxyalkyl) adduct of an aromatic diol and a linear aliphatic dicarboxylic acid,
(d) a phenol capping agent,
where said condensation product (1) has a molecular weight of between about 1,000 and 4,000 an equivalent (solids) weight of between about 250 and 1,000, and substantially no aliphatic hydroxyl groups;
(2) a multi-isocyanate curing agent;
(3) a volatile organic solvent for said aromatic hydroxyl-functional condensation product and for said multi-isocyanate curing agent,
the ratio of aromatic hydroxyl equivalents of said condensation product to the isocyanate equivalents of said multi-isocyanate being between about 1:1 and 1:2.

4,374,182
PREPARATION OF SILICON METAL THROUGH POLYMER DEGRADATION
John H. Gaul, and Donald R. Weyenberg, both of Midland, Mich., assignors to Dow Corning Corporation, Midland, Mich.
Filed Jul. 7, 1980, Ser. No. 166,201
Int. Cl.³ B32B *9/00;* **B05D** *3/02*
U.S. Cl. 428—446 **7 Claims**

1. A method of preparing silicon consisting essentially of pyrolyzing a polychlorosilane, having a molecular weight greater than the molecular weight of Si_2Cl_6, in an inert atmosphere or in a vacuum, at a temperature of 500° C. to 1450° C.

4,374,183
SILICON-SLURRY/ALUMINIDE COATING
Daniel L. Deadmore, Middleburg Heights, and Stanley G. Young, North Olmsted, both of Ohio, assignors to The United States of America as represented by the Administrator, National Aeronautics and Space Administration, Washington, D.C.
Division of Ser. No. 161,254, Jun. 20, 1980, Pat. No. 4,310,574. This application Aug. 14, 1981, Ser. No. 293,418
Int. Cl.³ B32B *15/04*
U.S. Cl. 428—641 **4 Claims**

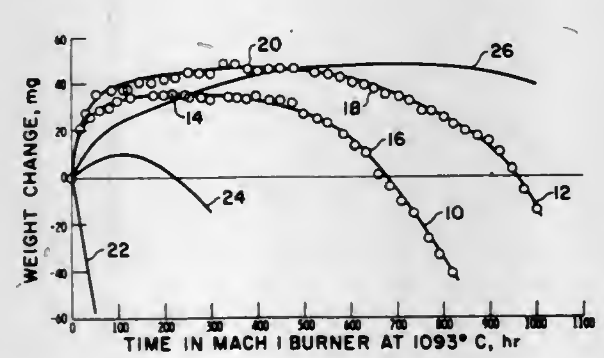

1. A coated article of manufacture comprising:
a substrate of a nickel-base superalloy,
a layer of silicon having a purity of about 99.9% and a specific weight of 6 mg of silicon per square centimeter of surface area covering said substrate, and
an aluminide coating covering said silicon layer.

4,374,184
FUEL CELL GENERATOR AND METHOD OF OPERATING SAME
Edward V. Somers, Murrysville, and Arnold O. Isenberg, Pittsburgh, both of Pa., assignors to Westinghouse Electric Corp., Pittsburgh, Pa.
Filed Sep. 29, 1981, Ser. No. 306,810
Int. Cl.³ H01M *8/06*
U.S. Cl. 429—17 **16 Claims**

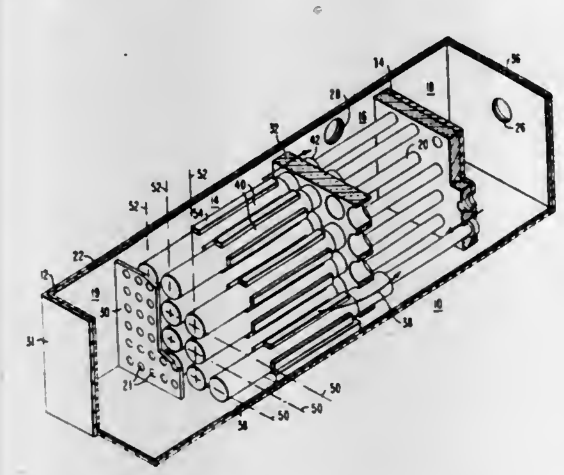

1. A method of operating a fuel cell generator of the type having a plurality of interconnected, elongated, annular solid oxide fuel cells each including a porous anode and cathode wherein said anode of each said cell includes a catalytic material, said method comprising:
flowing an oxidant adjacent said cathode; and
flowing a reactant, reformable to at least one of hydrogen and carbon monoxide in the presence of said catalytic material, adjacent said anode.

4,374,185
HIGH TEMPERATURE, HIGH PRESSURE CHEMICAL RESISTANT SEAL MATERIAL
Joseph Powers, Riverside; John C. Trocciola, Glastonbury, both of Conn., and Ronald G. Martin, Monson, Mass., assignors to United Technologies Corporation, Hartford, Conn.
Filed May 14, 1981, Ser. No. 263,660
Int. Cl.³ H01M *2/08*
U.S. Cl. 429—36 **3 Claims**

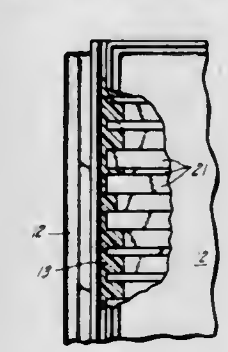

1. An electrochemical cell stack comprising a plurality of relatively flat electrochemical cells containing anodes, cathodes, electrolyte, and fuel and oxidant active catalysts, wherein fuel and oxidant gases are fed to or removed from the cell stack through plenums mounted on the cell stack,
the improvement comprising sealing the plenums to the cell stacks by application between the plenum and the cell stack of an extrudable seal material comprising an oil-free, filler-free polytetrafluoroethylene which maintains its sealing properties in the presence of phosphoric acid at differential pressures in excess of 50 psi at temperatures in excess of 400° F. (204° C.) having a molecular weight greater than 1×10^6 and a particle size greater than 1 micron.

4,374,186
POLYMER PACKAGED CELL IN A SACK
Joseph F. McCartney, Solana Beach; Thomas E. Jones, Spring Valley, and Leopold J. Johnson, Valley Center, all of Calif., assignors to The United States of America as represented by the Secretary of the Navy, Washington, D.C.
Filed Apr. 29, 1981, Ser. No. 258,838
Int. Cl.³ H01M *6/46*
U.S. Cl. 429—154 **15 Claims**

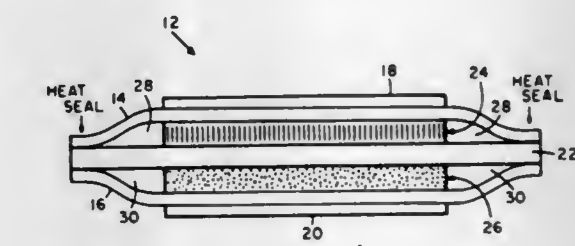

1. A battery cell comprising:
a first layer of conductive polymer;
a layer of cathode material disposed in contact with said first layer of conductive polymer;
a layer of ion permeable, electrolyte impermeable insulating material disposed in contact with said layer of cathode material and in contact with said layer of conductive polymer so as to form a complete enclosure around said layer of cathode material;
a layer of anode material disposed in contact with said layer of ion permeable insulating material; and
a second layer of conductive polymer disposed in contact with said layer of anode material and in contact with said layer of ion permeable insulating material so as to form a complete enclosure around said layer of anode material.

4,374,187
COVER APPARATUS IN MONOBLOCK STORAGE BATTERY
Ichiro Sano, Yokohama, Japan, assignor to The Furukawa Battery Co., Ltd., Kanagawa, Japan
PCT No. PCT/JP78/00034, § 371 Date Nov. 1, 1979, § 102(e) Date Nov. 1, 1979
PCT Filed Dec. 1, 1978, Ser. No. 142,059
Claims priority, application Japan, Mar. 4, 1978, 53-26992[U]
Int. Cl.³ H01M *2/08*
U.S. Cl. 429—175 **10 Claims**

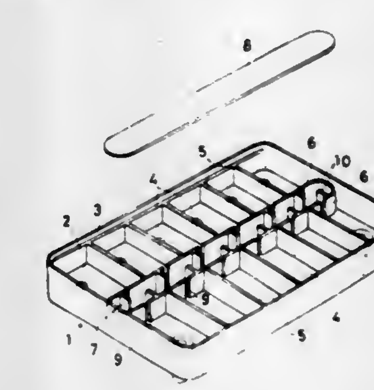

1. A cover apparatus in a monoblock battery comprising a top wall having an underside surface, a plurality of cell partition walls depending from said top wall underside surface defining a plurality of cell chambers, mutually facing walls crossing said cell partition walls, a cover wall associated with said facing walls for defining on the underside of said top wall an exhaust duct common to said plurality of cell chambers, and said duct being formed with openings communicating with

respective of said cell chambers whereby exhaust gas generated in the cell chambers flows through the respective duct openings into said common exhaust duct and thereupon to the atmosphere.

4,374,188

ELECTRIC STORAGE BATTERY

Stephen W. Campbell, Camberley; Eric E. Cragg; Michael J. Elwell, both of West Midlands, and Raymond A. Johnson, Birmingham, all of England, assignors to Lucas Industries Limited, Birmingham, England

PCT No. PCT/GB80/00163, § 371 Date Jun. 10, 1981, § 102(e) Date Jun. 10, 1981, PCT Pub. No. WO81/01074, PCT Pub. Date Apr. 16, 1981

PCT Filed Oct. 13, 1980, Ser. No. 276,383

Claims priority, application United Kingdom, Oct. 13, 1979, 7935626

Int. Cl.[3] H01M *2/10*

U.S. Cl. 429—187 **11 Claims**

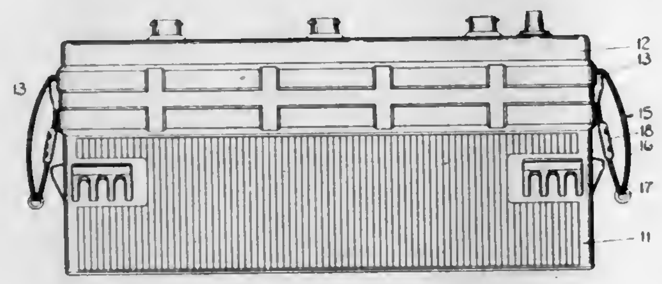

1. A container element for an electric storage battery including a pair of carrying handles extending between respective pairs of spaced holes formed in projecting lugs on the container element, each handle including at least one strip of rope or similar flexible material passing through the associated pair of holes and joined at the ends to define a continuous loop, the portions of each loop extending between the associated pair of holes being held in juxtaposition so as to ensure that each handle is gripped by way of a double thickness of said rope or similar material.

4,374,189

PROCESS OF MAKING A HOLOGRAPHIC OPTICAL ARTICLE

Carl A. Heller, China Lake, and Warren J. Murbach, Sun City, both of Calif., assignors to The United States of America as represented by the Secretary of the Navy, Washington, D.C.

Continuation-in-part of Ser. No. 104,511, Dec. 17, 1979, abandoned. This application Feb. 2, 1981, Ser. No. 230,187

Int. Cl.[3] G03C *5/04*

U.S. Cl. 430—2 **8 Claims**

1. A method of making holographic optical devices by changing the index of refraction in selected portions of polymer material comprising the steps of:

cleaning noncross linked polymer film with acetone;

placing said cleaned polymer film between an upper and a lower quartz sheet;

putting a metal grating between said polymer material and said upper quartz sheet; and

exposing said polymer material in air by shining light of a predetermined wavelength through said metal grating and upper quartz sheet such that the duration of exposure determines the amount of change in the index of refraction that occurs in the exposed areas.

4,374,190

ERASABLE INTERMEDIATE DIAZO-TYPE PAPER

John Y. Hur, Poughkeepsie, N.Y., assignor to AM International, Inc., Chicago, Ill.

Continuation of Ser. No. 946,896, Sep. 28, 1978, abandoned. This application May 21, 1981, Ser. No. 265,742

Int. Cl.[3] G03C *1/80*

U.S. Cl. 430—19 **2 Claims**

1. An erasable, light transmitting, non-curling diazo-type intermediate comprising a transparentized paper substrate, a first dry barrier coating on said substrate, said coating being formed from a coating solution consisting of a non-aqueous solution of polyurethane and vinyl toluene-α-methyl styrene copolymer dissolved in a mixture of methyl ethyl ketone and methyl cellosolve acetate, and a second dry light sensitive layer overlying said first barrier layer, said second light sensitive layer being deposited from a non-aqueous aliphatic alcohol soluble sensitizer formulation comprising a diazo composition, said barrier layer being insoluble in said sensitizer formulation, said barrier layer having good adhesion to both said light sensitive layer and said paper.

4,374,191

DRY REVERSAL DEVELOPER FOR ELECTROSTATIC PHOTOGRAPHY AND ELECTROSTATIC PHOTOGRAPHIC METHOD USING THE SAME

Akio Mukoh; Hirosada Morishita; Masayasu Anzai, all of Hitachi; Kazuyoshi Tokunaga, and Yasuo Kikuchi, both of Katsuta, all of Japan, assignors to Hitachi, Ltd. and Hitachi Koki Co., Ltd., both of Tokyo, Japan

Continuation-in-part of Ser. No. 857,888, Dec. 6, 1977, abandoned. This application May 27, 1980, Ser. No. 153,319

Claims priority, application Japan, Dec. 10, 1976, 51-147748

Int. Cl.[3] G03G *9/14, 13/09*

U.S. Cl. 430—100 **13 Claims**

1. A method for recording electrostatic photography comprising the steps of charging a photoconductive drum, exposing said drum to light to form an electrostatic latent image corresponding to an image to be recorded, on said drum; reversal-developing said electrostatic latent image using dry reversal developer, said developer being deposited on said drum from a magnetic brush comprising a sleeve surrounding a magnetic roll; transferring toner deposited on said drum during said reversal-developing step to a record medium and fixing the transferred toner, characterized in that said reversal development is carried out with said sleeve and said photoconductive drum being grounded, whereby said sleeve and said photoconductive drum are non-biased relative to each other, and further characterized in that said dry reversal developer includes 100 parts by weight of individual carrier particles having ferromagnetic properties and 1–10 parts by weight of individual toner particles as essential ingredients and has a volume specific resistance that is sufficiently high such that the proximate counterelectrode effect of the magnetic brush created on the sleeve of the magnetic roll is reduced and a self-biasing voltage is produced substantially only by crests of the magnetic brush comprised of developer, wherein said volume specific resistance of the dry reversal developer is from 3.5×10^9 to 1×10^{11} Ω-cm, and wherein the magnetic brush has a resistance of above 4.5×10^7 Ω.

4,374,192

CARRIER COATING COMPOSITIONS OF BUTADIENE-ACRYLONITRILE RUBBER AND POLYURETHANE

Edward F. Mayer, San Jose; Arthur S. Diamond, Ventura, both of Calif., and Paul Chang, Hanover Park, Ill., assignors to Ricoh Company, Ltd., Tokyo, Japan

Division of Ser. No. 203,881, Nov. 4, 1980, Pat. No. 4,331,756. This application Feb. 25, 1982, Ser. No. 352,352

Int. Cl.[3] G03G *9/10;* **B32B** *25/02, 27/40*

U.S. Cl. 430—108 **12 Claims**

1. An electrophotographic developer composition comprising coated carrier particles together with toner particles, the coating comprising a miscible mixture of a butadiene-acrylonitrile rubber containing from about 20% to 40% by weight acrylonitrile together with a polyurethane elastomer, said mixture being soluble in organic solvents.

4,374,193

PHOTOSENSITIVE MATERIAL AND PROCESS FOR DEVELOPING THE SAME

Takeo Moriya, Kawagoe, and Toshio Yamagata, Urawa, both of Japan, assignors to Kimoto & Co., Ltd., Japan

Filed Apr. 29, 1981, Ser. No. 258,771

Claims priority, application Japan, May 16, 1980, 55-65044

Int. Cl.[3] G03C *1/60, 5/34, 5/18;* **G03F** *7/08*

U.S. Cl. 430—149 **7 Claims**

1. A positive-working photosensitive material comprising: (1) a base material and (2) a layer of photosensitive composition formed on said base material and comprising (A), 100 weight parts of a resin binder containing at least 50 weight % of a vinylic polymer compound having an average polymerization degree of 300–2600 and represented by the general formula:

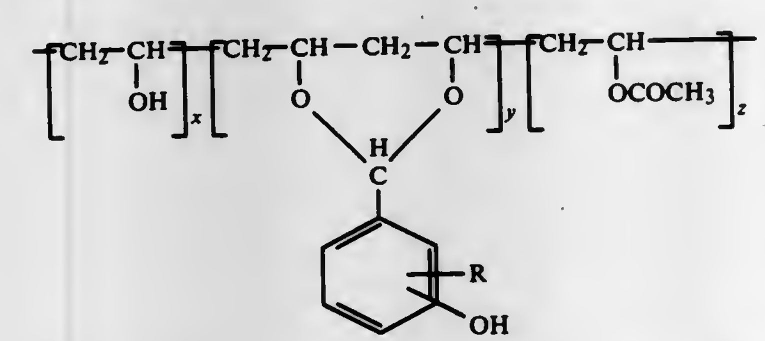

wherein R represents hydrogen, hydroxyl, carboxyl, alkyl, alkoxyl, aryl, nitro, amino or halogen; and having a copolymerization ratio of x:y:z of 5–50:5–85:10–60 and (B), 3–30 weight parts of an aromatic diazonium salt having only a single diazo group.

4. A process for developing a positive-working photosensitive material comprising:

providing a base material;

forming on said base material a layer of a photosensitive composition comprising (A), 100 weight parts of a resin binder containing at least 50 weight % of a vinylic polymer compound having an average polymerization degree of 300–2600 and represented by the general formula:

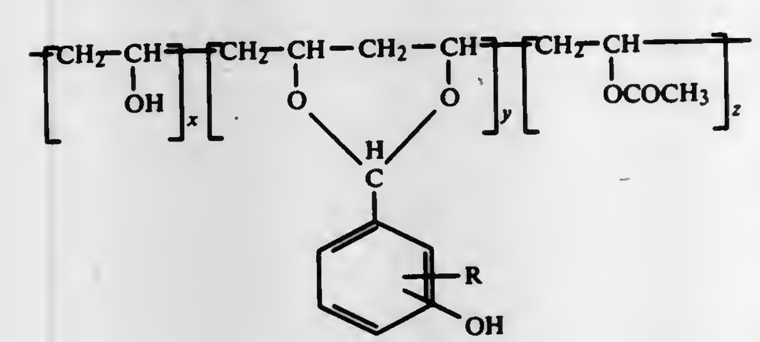

wherein R represents hydrogen, hydroxyl, carboxyl, alkyl, alkoxyl, aryl, nitro, amino or halogen; and having a copolymerization ratio of x:y:z of 5–50:5–85:10–60 and (B), 3–30 weight parts of an aromatic diazonium salt having only a single diazo group;

bringing said positive-working photosensitive material into intimate contact with a positive manuscript;

exposing said positive-working photosensitive material to radiation through said manuscript; and

developing said exposed material by contact with an alkali developer to obtain a positive relief image.

4,374,194

DYE IMBIBITION PHOTOHARDENABLE IMAGING MATERIAL AND PROCESS FOR FORMING POSITIVE DYE IMAGES

Hugh G. McGuckin; Susan E. Hartman, and Donald P. Specht, all of Rochester, N.Y., assignors to Eastman Kodak Company, Rochester, N.Y.

Continuation-in-part of Ser. No. 214,144, Dec. 8, 1980, abandoned. This application Dec. 4, 1981, Ser. No. 327,527

Int. Cl.[3] G03C *5/54, 1/40, 5/00;* **B41M** *5/00*

U.S. Cl. 430—199 **26 Claims**

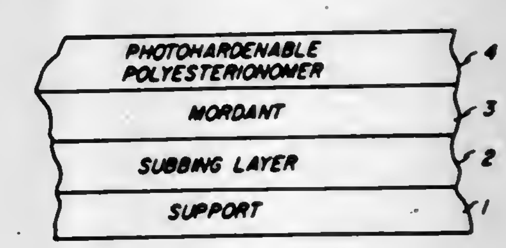

1. In a dye imbibition imaging element comprising, in sequence:

(a) a support having thereon,

(b) a cationic mordant layer for an anionic dye, and

(c) a sensitized photohardenable photopolymer layer superposed on said mordant layer,

the improvement wherein:

said photopolymer layer consists essentially of a photosensitive polyesterionomer represented by the formula:

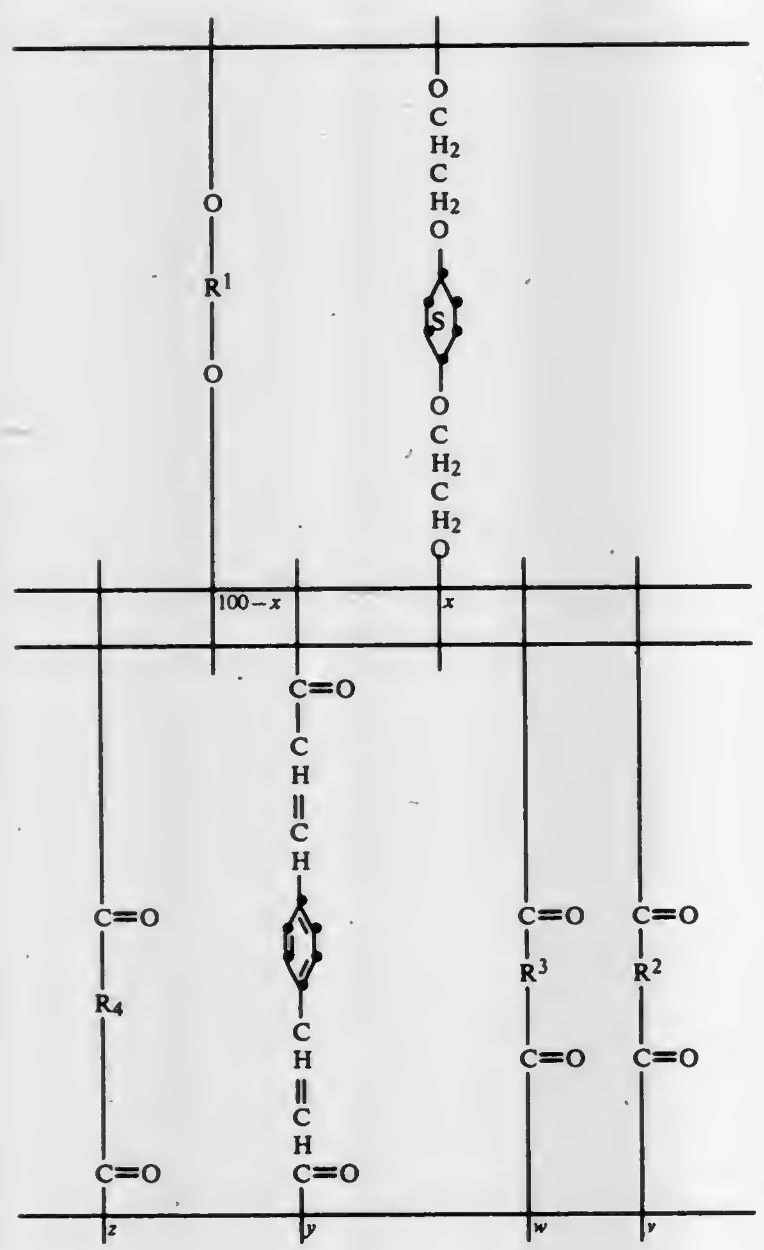

wherein:

R^1 is straight or branched chain alkylene containing 2 to 10 carbon atoms, cycloalkylene containing 5 or 6 carbon atoms, or an aliphatic ether group containing 3 to 12 carbon atoms;

R^2 is an aromatic group containing 6 to 12 carbon atoms;

R^3 is straight or branched chain alkylene containing 2 to 10 carbon atoms;

R^4 is an ionic group selected from those having the structures:

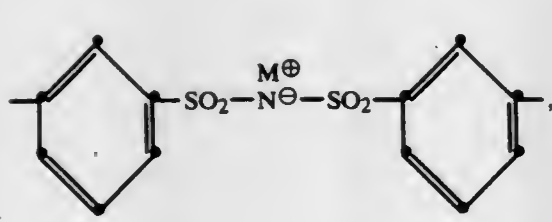

,

-continued

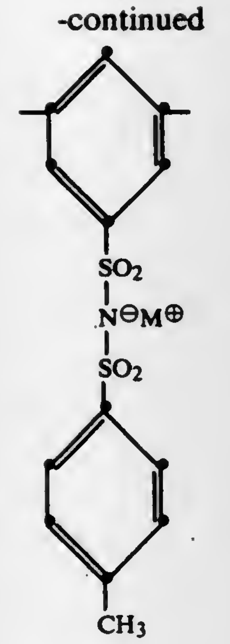

,

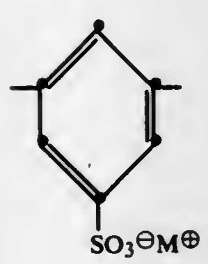

,

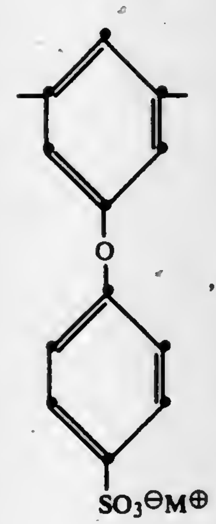

, and

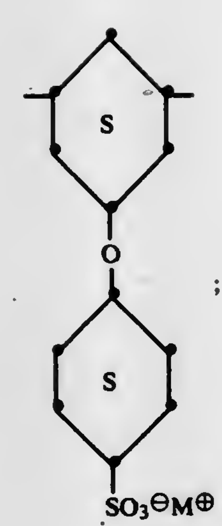

;

$M^{\oplus}$ is an alkali metal or ammonium ion;
x is 50 to 100 mole percent;
v is 0 to 35 mole percent;
w is 0 to 35 mole percent;
y is 50 to 85 mole percent; and
z is 15 to 40 mole percent.

4,374,195
INSTANT FILMSTRIP WITH AN ELASTIC COVER
William J. Hutchinson, Rochester, N.Y., assignor to Eastman Kodak Company, Rochester, N.Y.
Filed Dec. 12, 1980, Ser. No. 215,889
Int. Cl.^{3} G03D *9/02;* G03C *1/42*
U.S. Cl. 430—499 4 Claims

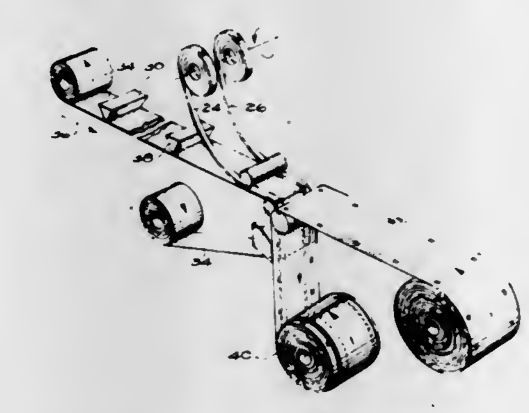

1. A photographic film assembly comprising:
a filmstrip including first and second elongated superposed sheets each coated with photographic material, said filmstrip having leading and trailing ends and lateral edges and being helically wound trailing end first in a roll with said second sheet radially outwardly of said first sheet in each convolution of said roll; and
means joining said second sheet to said first sheet along said lateral edges to inhibit fluid processing composition introduced between said first and second sheets from leaking at said lateral edges, said second sheet being sufficiently elastic to accommodate the path length difference between the first and second sheets.

4,374,196
SILVER HALIDE EMULSIONS CONTAINING LATENT IMAGE STABILIZING COMPOUNDS
Arthur H. Herz, Rochester, N.Y., assignor to Eastman Kodak Company, Rochester, N.Y.
Filed Feb. 20, 1981, Ser. No. 236,360
Int. Cl.^{3} G03C *1/06*
U.S. Cl. 430—505 18 Claims

1. A photographic silver halide emulsion containing as a latent image stabilizer, in a latent image stabilizing amount, a compound represented by the formula:

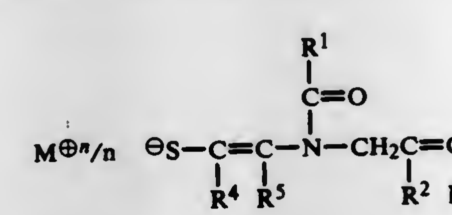

wherein:
R^1 is hydrogen, alkyl, or aryl;
R^2 and R^3 are each individually hydrogen, alkyl, alkoxy, carboxy, alkoxycarbonyl, or aminocarbonyl;
R^4 and R^5 are each individually hydrogen, alkyl, aryl, cyano, halogen, formyl, carboxy, alkylcarbonyl, arylcarbonyl, alkoxycarbonyl, aryloxycarbonyl or aminocarbonyl;
n is an integer of 1 or 2; and
$M^{\oplus n}$ is a cation of valence n.

4,374,197
PROCESS FOR THYMOSIN α_1
Bernard L. Horecker, New York, N.Y., assignor to Hoffmann-La Rocche Inc., Nutley, N.J.
Continuation-in-part of Ser. No. 201,687, Oct. 30, 1980, abandoned. This application Sep. 8, 1981, Ser. No. 300,324
Int. Cl.^{3} C12P *21/00;* C12N *9/10*
U.S. Cl. 435—68 10 Claims

1. A process for preparing thymosin α_1 comprising reacting N^{α}-desacetylthymosin α_1 with an acetylating agent in the presence of transacetylase in an aqueous solvent, so as to selectively acetylate the N^{α}-amino group of N^{α}-desacetylthymosin α_1.

4,374,198
RAPID UTILIZATION OF DISACCEARIDES BY FERMENTATION
Franklyn D. Miller, Cincinnati, Ohio, and Werner C. Muller, Dobbs Ferry, N.Y., assignors to National Distillers & Chemical Corp., New York, N.Y.
Filed Apr. 30, 1981, Ser. No. 259,314
The portion of the term of this patent subsequent to Feb. 16, 1999, has been disclaimed.
Int. Cl.^{3} C12P *7/14*
U.S. Cl. 435—162 11 Claims

1. A process for the production of ethanol by continuous fermentation which comprises carrying out fermentation upon an aqueous solution of fermentable sugar and a minor amount of sugar oligomer and/or sugar repolymerizate in a series of fermentation vessels employing at least two different strains of ethanol-producing yeast, the first strain of yeast providing a relatively high rate of conversion of fermentable sugar to ethanol in a fermentation medium containing a concentration of fermentable sugar which does not significantly retard the rate of growth of the yeast, and the second strain providing a relatively high rate of conversion of sugar oligomers and/or sugar repolymerizates to ethanol, each of said strains of yeast being separately employed in its own fermentation vessel from which said yeast is separately recovered therefrom and recycled thereto.

4,374,199
METHOD FOR GENERATION OF BIO-GAS
Vernon H. Carter, P.O. Box 95 PSR, Elkins, Ark. 72727
Filed Nov. 3, 1980, Ser. No. 203,247
Int. Cl.^{3} C05F *11/08;* C12N *13/00;* C12P *5/02*
U.S. Cl. 435—167 6 Claims

1. In a process for producing bio-gas by continuously introducing organic wastes into a digester, collecting bio-gas from the digester as it is produced by the fermentation of the organic wastes and continuously withdrawing sludge from the digester, the improvement comprising:
(a) introducing magnetotactic bacteria into the digester in an amount sufficient to facilitate the fermentation of said organic wastes; and
(b) prohibiting said bacteria from exiting said digester with the sludge withdrawn therefrom by creating a magnetic field in said digester to situate said bacteria apart from said sludge, whereby said bacteria is retained in said digester as said sludge is being withdrawn.

4,374,200
BROAD HOST RANGE SMALL PLASMID RINGS AS CLONING VEHICLES
Ronald H. Olsen, Ann Arbor, Mich., assignor to Microlife Technics, Inc., Sarasota, Fla.
Filed May 8, 1980, Ser. No. 147,563
Int. Cl.^{3} C12N *15/00;* C12P *21/00, 21/02, 19/34;* C12N *1/20, 1/00;* C12R *1/065, 1/22, 1/38, 1/19*
U.S. Cl. 435—172 17 Claims

1. The process for producing recombinant deoxyribonucleic acid plasmids which comprises:

(a) providing a first plasmid as a cloning vehicle selected from pRO1600, pRO1601, pRO1613, pRO1614, pRO1615, and pRO1616 as carried in *Pseudomonas aeruginosa* NRRL-B-12124 NRRL-B-12125, NRRL-B-12126, NRRL-B-12127, NRRL-B-12149 and NRRL-B-12148, respectively;
(b) reacting the first plasmid and a second deoxyribonucleic acid source with at least one restriction endonuclease

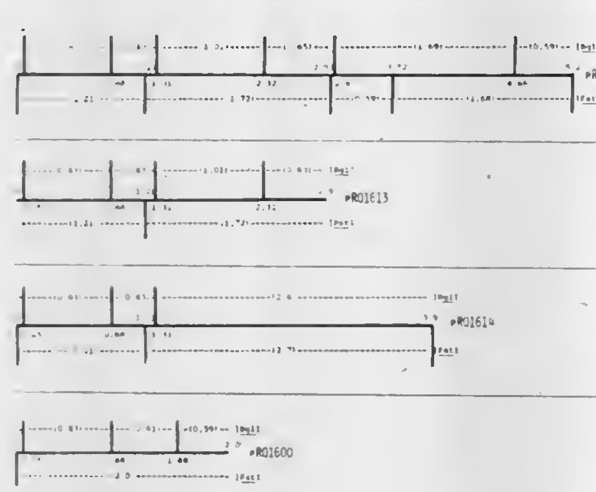

which cleaves the first plasmid and the second deoxyribonucleic acid source into linear DNA fragments; and
(c) randomly recombining the linear deoxyribonucleic acid fragments using ligation to form recombinant plasmids which replicate during cell division when provided in a bacterial cell, wherein deoxyribonucleic acid from the cloning vehicle controls replication of the recombinant plasmid during cell division.

4,374,201
PROCESS FOR COATING A DRY VARIOLA VIRUS
Michael D. Orlando, and Jean M. Riley, both of Frederick, Md., assignors to The United States of America as represented by the Secretary of the Army, Washington, D.C.
Filed Jul. 9, 1965, Ser. No. 471,792
Int. Cl.^{3} C12N *5/00*
U.S. Cl. 435—239 **2 Claims**

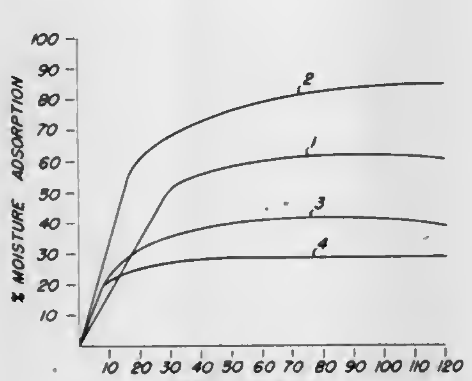

1. A process for coating dry variola virus which comprises the steps of:
(a) chorioallantoic inoculation of the embryo of fertile eggs,
(b) incubating the eggs for a period of time sufficient to cultivate the virus,
(c) separating the embryo from the rest of the egg,
(d) homogenizing the harvested embryo,
(e) stabilizing the resultant mixture by the addition thereto of a stabilizer comprising the following percent weight per volume: 0.5% to 2.0% lactose; 0.5% to 2.0% raffinose; 0.3% to 1.2% lysine; 0.3% to 1.2% sodium glutamate; 0.1% to 0.4% isoniazid; and 0.1% to 0.4% thiourea.
(f) pelletizing, freeze-drying, pooling and milling of the stabilized slurry,
(g) treatment of the milled dried variola material with methyl amyl acetate in a ratio of 1:10 by weight and the agitation thereof,
(h) filtering the resultant mixture under a vacuum,
(i) recovering the product.

4,374,202
CERAMIC FIBER FOAM AND METHOD FOR MAKING SAME
Jerry Zucker, Charleston, S.C., and Beth W. Porlier, Missouri City, Tex., assignors to RM Industrial Products Company, Inc., North Charleston, S.C.
Filed Dec. 23, 1980, Ser. No. 220,246
Int. Cl.^{3} C04B *21/06, 21/10, 35/22, 3/06*
U.S. Cl. 501—82 **10 Claims**

1. A light weight heat resistant body, said body comprising from about 50 to about 95 percent ceramic fiber, exclusive of glass and asbestos fiber, in the form of a porous elastic foam, said fiber being selected from the group containing at least one of aluminum oxide and calcium oxide, said body having a bulk density of from about 0.3 to about 6 pounds per cubic foot and being resistant to temperatures in excess of 1900° F.

4,374,203
STABLE CLAY SLURRIES
Thomas D. Thompson, Flemington; John F. Gergel, Perth Amboy, and Peter Economou, Millington, all of N.J., assignors to Yara Engineering Corporation, Elizabeth, N.J.
Filed Mar. 10, 1982, Ser. No. 356,935
Int. Cl.^{3} C09C *1/42*
U.S. Cl. 501—148 **6 Claims**

1. A stable calcined clay suspension comprising at least 50% by weight of calcined clay in an aqueous medium in the presence of about 0.30% to 0.49% by weight of anionic polymer and about 0.007% to 0.011% by weight of cationic polymer in the slurry.

4,374,204
POROUS OPEN-CELL FILLED REACTIVE MATERIAL CONTAINING A POLYMERIC MATRIX AND REACTIVE FILLER
Sasho P. Alexandrov, ulitsa Sadovaya, 54, kv. 511; Gadylsha M. Mubarakshin, ulitsa Leni Golikova, 23, korpus 4, kv. 16; Leonard A. Volf, ulitsa Novosibirskaya 18/5, kv. 45, and Stanislav V. Burinsky, ulitsa Bukharestskaya, 45, kv. 55, all of Leningrad, U.S.S.R., assignors to Leningradsky Ordena Trudovogo Krasnogo Znameni Institut Textilnoi I Legkoi Promyshlennosti Imeni S.M. Kirova, U.S.S.R.
Filed May 19, 1980, Ser. No. 151,529
Int. Cl.^{3} B01J *39/00, 41/00, 43/00*
U.S. Cl. 521—28 **6 Claims**

1. A porous open-cell filled reactive material consisting of a polymeric matrix selected from the group consisting of foamed polyvinylformal and foamed polyurethane, and a reactive filler selected from the group consisting of finely divided ion-exchange fibres, complex-forming fibres and mixture thereof, the length of the fibers being substantially greater than the size of the pores and has been added after the content of fibres being from 10 to 80% by mass of the final material.

4,374,205
STABILIZATION OF POST-CHLORINATED VINYL CHLORIDE POLYMERS BY PHOSPHATE SALTS
Dale R. Hall, Avon Lake, Ohio, assignor to The B. F. Goodrich Company, Akron, Ohio
Continuation-in-part of Ser. No. 159,532, Jun. 16, 1980, Pat. No. 4,345,040. This application Jun. 23, 1982, Ser. No. 391,317
Int. Cl.^{3} C08J *9/40*
U.S. Cl. 521—85 **6 Claims**

1. A composition comprising a particulate porous chlorinated vinyl chloride polymer having a density in the range of from about 1.46 to about 1.65 grams/cc at 25° C., from about 5% to about 65% by volume of porespace, and a chlorine content in the range of from about 60% to about 72% by weight, a primary stabilizer other than a metal salt of phosphoric acid for said chlorinated vinyl chloride polymer uniformly dispersed throughout said composition of matter, and a metal salt of phosphoric acid uniformly dispersed throughout said composition of matter.

4,374,206
SYNTHESIS OF BASE-STABLE ALIPHATIC ANION EXCHANGE POLYMERS
Russel J. MacDonald, Wilmington, and Russell B. Hodgdon, Sudbury, both of Mass., assignors to Ionics Incorporated, Watertown, Mass.
Filed Feb. 23, 1981, Ser. No. 237,018
Int. Cl.^{3} C08F *20/36;* **B01J** *39/20, 14/44*
U.S. Cl. 521—38 **11 Claims**

1. A process for preparing a cross-linked quaternary amine anion exchange polymer comprising (a) reacting an alcoholic solution of glycidyl methacrylate with a solid tertiary amine-acid salt to yield a non-homogeneous alcohol mixture of an quaternary amine monomer (b) adding sufficient water to said non-homogeneous mixture until said mixture becomes homogeneous (c) adding a cross-linking polyol methacrylate ester monomer to the mixture to form a homogeneous liquid mixture of said ionic and cross-linking monomers and thereafter polymerizing said monomeric mixture by heating in the presence of a polymerization catalyst.

4,374,207
INTUMESCENT FLEXIBLE POLYURETHANE FOAM
Herman Stone, Hazleton; Peter D. Pauly, Mountaintop, and Peolinsky, Jr., Hazleton, all of Pa., assignors to G.F.C. Foam Corporation, Paramus, N.J.
Filed Oct. 24, 1980, Ser. No. 200,128
Int. Cl.^{3} C08G *18/14*
U.S. Cl. 521—107 **36 Claims**

1. In the process for the manufacture of a flexible, resilient, flame retardant and intumescent polyurethane foam from a reaction mixture consisting essentially of at least one polyether polyol, at least one organic polyisocyanate, at least one flame retardant, at least one blowing agent, at least one surfactant, and at least one catalyst, the improvement wherein the amount of said flame retardant is from about 30 to about 160 phr, and said reaction mixture also contains from about 200 to about 400 phr of hydrated alumina uniformly dispersed in from about 10 to about 100 phr of a low-viscosity, linear, polyester diol.

4,374,208
POLYETHER-URETHANE FOAMS
John C. J. Fallows, and Richard G. Harvey, both of High Wycombe, England, assignors to Dunlop Limited, London, England
Continuation of Ser. No. 233,116, Feb. 10, 1981, abandoned. This application Nov. 24, 1981, Ser. No. 324,418
Claims priority, application United Kingdom, Feb. 20, 1980, 8005791
Int. Cl.^{3} C08G *18/14*
U.S. Cl. 521—109 **13 Claims**

1. A one-shot process for the production of a polyetherurethane foam by reacting in a foam-forming reaction mixture:
(a) a polyoxyalkylene polyol containing at least two hydroxy groups per molecule, from 0 to 20% by weight polyoxyethylene groups and less than 20 mole percent primary hydroxyl groups and having a molecular weight in the range 1500 to 10000;
(b) a tolylene diisocyanate;
(c) a polyoxyalkylene/polysiloxane block copolymer of the type used in conventional (as opposed to high-resilience) urethane foam formulations:
(d) a blowing agent and
(e) at least one catalyst, wherein the reaction mixture additionally contains at least one substance selected from the group consisting of degradation products of a starch and starch derivatives having a degree of substitution less than 0.25, said degradation products and said derivatives containing up to 15% by weight of water.

4,374,209
POLYMER-MODIFIED POLYOLS USEFUL IN POLYURETHANE MANUFACTURE
Jeffrey P. Rowlands, Jona S. Gallen, Switzerland, assignor to Interchem International S.A., Luxembourg
Continuation-in-part of Ser. No. 208,633, Nov. 20, 1980, abandoned. This application Apr. 29, 1981, Ser. No. 258,620
Claims priority, application United Kingdom, Oct. 1, 1980, 8031649; Feb. 2, 1981, 8103105
Int. Cl.^{3} C08G *18/14*
U.S. Cl. 521—116 **29 Claims**

1. A method of forming a polymer-modified polyol, comprising polymerising a starting material with an organic polyisocyanate in the presence of a polyol with the polyol acting at least predominantly as an unreacted carrier, the starting material being triethanolamine and the triethanolamine reacting at least predominently polyfunctionally with the isocyanate.

4,374,210
POLYUREA-POLYURETHANE FROM A MIXTURE OF A POLYOL, AN AROMATIC DIAMINE, AND AN ISOCYANATE-TERMINATED PREPOLYMER
James H. Ewen; Thomas R. McClellan, both of Seabrook; Michael H. McMillin, Pasadena, and Pat L. Murray, Baytown, all of Tex., assignors to The Upjohn Company, Kalamazoo, Mich.
Filed Sep. 18, 1981, Ser. No. 303,217
Int. Cl.^{3} C08G *18/14*
U.S. Cl. 521—159 **20 Claims**

1. In a process for the production of a polyurea-polyurethane by the reaction of an organic polyisocyanate with a polyol and an aromatic diamine wherein at least one of the positions ortho to each of the amino groups is substituted by lower-alkyl, in the presence of a catalyst for the reaction between hydroxy groups and isocyanato groups, the improvement which comprises employing as the organic polyisocyanate an isocyanate-terminated prepolymer having an isocyanate content of about 9 to about 20 percent derived by reaction of 4,4'-methylenebis(phenyl isocyanate) with a polyol having a functionality from 2 to 3 selected from the class consisting of copolymers of ethylene oxide and propylene oxide having molecular weights from about 1000 to about 10,000, polytetramethylene glycols having molecular weights from about 600 to about 5,000 and polyester polyols having molecular weights from about 500 to 8,000, said polyol and said isocyanate being reacted in the proportion of about 0.01 equivalents to about 0.5 equivalents of said polyol per equivalent of said isocyanate.

4,374,211
ARAMID CONTAINING FRICTION MATERIALS
John P. Gallagher, Bayville, N.J., and Philip H. Dougherty, Penndel, Pa., assignors to Thiokol Corporation, Newtown, Pa.
Filed Sep. 15, 1981, Ser. No. 302,330
Int. Cl.^{3} C08L *61/06*
U.S. Cl. 523—156 **40 Claims**

1. A non-asbestos type friction material composition suitable for use as a friction element consisting essentially of a thermosetting binder, a fibrous reinforcing material, and an effective amount of an aramid polymer pulp fiber to result in good structural integrity of a preform manufactured from said friction material.

4,374,212

SHEET HANDLING DEVICE

Arthur C. Martellock, Pittsford; Richard L. Carlston, and Shwu-Jian Liang, both of Rochester, all of N.Y., assignors to Xerox Corporation, Stamford, Conn.

Filed Jul. 29, 1981, Ser. No. 288,097

Int. Cl.³ C08L *61/06*

U.S. Cl. 523—212 **7 Claims**

1. A sheet handling device for use in an electrostatographic copying machine wherein a sheet is conveyed by frictional engagement with a handling member, said handling device comprising a handling member which comprises a silicone roller composition obtained from the functional surface of room temperature vulcanization of a room temperature vulcanizable silicone rubber composition comprising a diorganopolysiloxane, a treated filler, an organosilicate, and a curing catalyst, said treated filler being a silica filler treated with a mixture of a hydroxyl amine, a cyclic siloxane, and a silyl nitrogen compound.

4,374,213

ALKALINE RESISTANT ORGANIC COATINGS FOR CORROSION SUSCEPTIBLE SUBSTRATES III

Ray A. Dickie, Birmingham; Joseph W. Holubka, Livonia, and S. Burhan A. Qaderi, Westland, all of Mich., assignors to Ford Motor Company, Dearborn, Mich.

Continuation of Ser. No. 938,670, Aug. 31, 1978, abandoned. This application Apr. 10, 1980, Ser. No. 139,068

Int. Cl.³ C08L *63/00*

U.S. Cl. 523—416 **5 Claims**

1. A water dilutable primer concentrate that provides upon intimate admixture with water a primer composition which retards corrosion even in substantial absence of chromate corrosion inhibiting pigments and which comprises an intimate admixture of film forming ingredients which consist essentially of:

(A) A substantially gel free epoxy and amine reaction product which contains no ester linkages and which is made by reacting in non-aqueous water miscible medium reactants consisting essentially of:

1. An epoxy reactant having two 1,2-epoxy groups per molecule which is the reaction product of bisphenol A and epichlorohydrin and has an epoxide equivalent weight range from at least about 875 to 4,000; and
2. A water soluble amine reactant selected from the group consisting of secondary monoamines having a total of up to about 20 carbons, and comprising at least about 90 mole percent secondary hydroxy amine that has two or more alkyl groups each bearing a primary hydroxy group

in a stoichiometric amount such that the reaction product (A) comprises tertiary amino and primary and secondary hydroxy groups and is substantially free of unreacted epoxy groups;

(B) An amino aldehyde resin crosslinking agent at about 5–30% by weight of A; and

(C) Non-chromate pigment at a weight ratio of A+B+C of about 40:60 to 60:40, wherein a mixture of A, B, and C is neutralized at least partially with D a weak organic acid.

4,374,214

IMIDE CONTAINING BLENDS AND POLYMERIC COMPOSITIONS PREPARED THEREFROM

Fred F. Holub, Schenectady, N.Y., and John T. Hoback, Wilmington, Del., assignors to General Electric Company, Schenectady, N.Y.

Continuation of Ser. No. 167,125, Jul. 9, 1980, abandoned, which is a continuation of Ser. No. 785,501, Apr. 7, 1977, abandoned, which is a continuation-in-part of Ser. No. 487,715, Jul. 11, 1974, abandoned, which is a continuation of Ser. No. 375,715, Jul. 2, 1973, abandoned, which is a division of Ser. No. 200,590, Nov. 19, 1971, Pat. No. 3,763,087. This application Mar. 3, 1981, Ser. No. 239,963

Int. Cl.³ C08L *63/02*

U.S. Cl. 523—466 **5 Claims**

1. Curable compositions comprising by weight,

(A) an epoxy resin prepared from epichlorohydrin and bisphenol-A,

(B) from about 0.2 to about 0.5 parts of a bismaleimide per part of (A),

(C) from about 0.2 to about 0.5 part per part of (A) of an arylene diamine selected from the class consisting of metaphenylene diamine and para,para-methylene dianiline and

(D) and 0.01–5% by weight of the curable composition of an organic peroxide.

4,374,215

POLYESTER MOLDINGS

Kenneth E. Atkins, South Charleston, W. Va., assignor to Union Carbide Corporation, Danbury, Conn.

Continuation-in-part of Ser. No. 93,589, Nov. 13, 1979, abandoned. This application Oct. 16, 1980, Ser. No. 194,069

Int. Cl.³ C08L *67/00*

U.S. Cl. 523—514 **18 Claims**

1. In a composition containing an unsaturated polyester, a polymerizable ethylenically unsaturated monomer which serves to crosslink the unsaturated polyester to a thermoset product and a thermoplastic polymer low profile additive, the improvement which comprises incorporating into said composition an effective amount of a secondary crosslinkable vinyl monomer having a reactivity ratio r_1 with styrene of greater than 1 whereby sheet molding and bulk molding compositions are produced which provide molded articles with superior surface appearance.

4,374,216

STABLE HIGH SOLIDS WATER-IN-OIL SLURRY DISPERSION COMPOSITION

Laurence G. Dammann, Crestwood, Ky., assignor to Celanese Corporation, New York, N.Y.

Filed Dec. 9, 1981, Ser. No. 328,977

Int. Cl.³ C08L *1/08, 5/00;* C08J *3/06*

U.S. Cl. 524—35 **17 Claims**

1. A process for the production of a non-gelling water-in-oil high solids slurry dispersion of water-soluble polymer which comprises (1) subjecting a water-in-oil dispersion of synthetic water-soluble polymer to distillation to reduce the water content to less than about 15 weight percent of the dispersion; and (2) slurrying a quantity of finely divided solid water-soluble polymer into the step (1) water-reduced dispersion to provide a slurry dispersion containing between about 40–80 weight percent of water-soluble polymer, based on the weight of the slurry dispersion composition.

4,374,217

COLD-SETTING STARCH ADHESIVE

Kanichi Miyake, Fujisawa; Masahiro Tokuda, Yokohama; Takaaki Aoki, Yokohama; Hideaki Miyakawa, Yokohama, and Yasuo Tamura, Yokohama, all of Japan, assignors to Hohnen Oil Co., Ltd., Tokyo, Japan

Filed Dec. 29, 1981, Ser. No. 335,550

Claims priority, application Japan, Jan. 14, 1981, 56-4200; Apr. 7, 1981, 56-51941

Int. Cl.³ C08L *3/00, 3/04*

U.S. Cl. 524—47 **14 Claims**

1. A cold-setting starch adhesive comprising hot high solid aqueous paste of gelatinized starch containing as adhesive component a mixture of 20 to 80% by weight of unmodified or modified high amylose corn starch having an amylose content of at least 50%, 10 to 70% by weight of unmodified or modified ordinary corn starch, and 1 to 10% by weight of waxy corn starch.

2. A water-resistant, cold-setting starch adhesive comprising hot high solid aqueous paste of gelatinized starch containing as adhesive component a mixture of 20 to 80% by weight of unmodified or midified high amylose corn starch having an amylose content of at least 50%, 10 to 79% by weight of unmodified or modified ordinary corn starch, and 1 to 10% by weight of waxy corn starch, and formaldehyde resin solution.

4,374,218

RESILIENT SEALING COMPOSITIONS

Kay-Kiong Tay, Erie, Pa., assignor to Lord Corporation, Erie, Pa.

Filed Feb. 25, 1982, Ser. No. 352,510

Int. Cl.³ C08K *3/22, 5/04, 5/09, 5/17*

U.S. Cl. 524—86 **2 Claims**

1. A composition of matter comprising

(a) from 69 to 81 parts by weight of at least one elastomeric homopolymer of 1,3-butadiene;

(b) 100−x, wherein x is the amount, in parts by weight, of said elastomeric homopolymer of 1,3-butadiene, of at least one copolymer of styrene and 1,3-butadiene;

(c) from 2 to 10 parts by weight of zinc oxide;

(d) from 100 to 120 parts by weight of carbon black, such carbon black consisting of 25–32 percent by weight of at least one high abrasion furnace black, 27–35 percent by weight of at least one semi-reinforcing furnace/high modulus black, and 37–46 percent by weight of at least one medium thermal black;

(e) from 2 to 30 parts by weight of at least one polymerizable methacrylic monomer having at least two polymerizable methacrylate groups;

(f) from 0.1 to 10 parts by weight of at least one organic peroxide;

(g) from 0.1 to 5 parts by weight of stearic acid; and

(h) from 0.1 to 10 parts by weight of at least one compound selected from the group consisting of antioxidants and antiozanants.

4,374,219

ALKANOLAMINE ESTER OF 1,1-BIPHENYL-2,2-DIYL-AND ALKYLIDENE-1,1-BIPHENYL-2,2-DIYL-CYCLIC PHOSPHITES

John D. Spivack, Spring Valley; Martin Dexter, Briarcliff Manor, and Stephen D. Pastor, Spring Valley, all of N.Y., assignors to Ciba-Geigy Corporation, Ardsley, N.Y.

Continuation-in-part of Ser. No. 209,786, Nov. 24, 1980, Pat. No. 4,318,845. This application Jul. 23, 1981, Ser. No. 285,901

The portion of the term of this patent subsequent to Mar. 9, 1999, has been disclaimed.

Int. Cl.³ C08K *5/52*

U.S. Cl. 524—91 **8 Claims**

1. A composition of matter comprising an organic material subject to oxidative, thermal and actinic degradation stabilized with an effective stabilizing amount of a compound corresponding to the formula

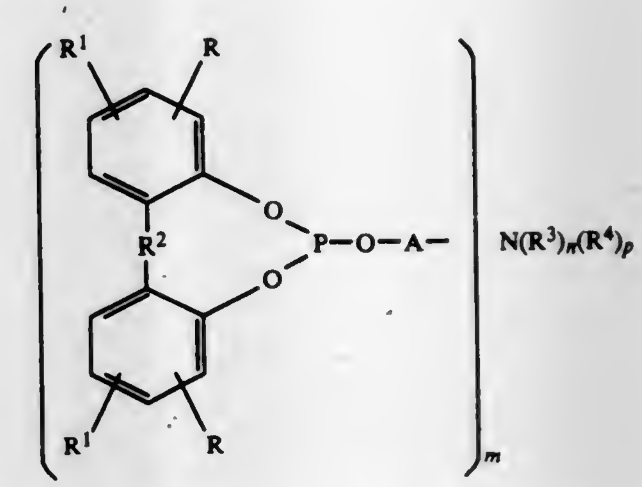

wherein m, n and p are each 1, m is 2 and n is 1 and p is 0 or m is 3 and n and p are 0, and wherein

R is alkyl of from 1 to 18 carbon atoms,

R^1 is hydrogen or alkyl of from 1 to 18 carbon atoms,

R^2 is a direct bond or alkylene of from 1 to 12 carbon atoms,

A is alkylene of from 1 to 6 carbon atoms, or cycloalkylene of 5 to 6 carbon atoms,

R^3 is alkyl of 1 to 18 carbon atoms, or

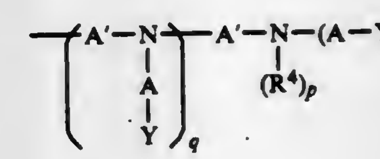

wherein Y is

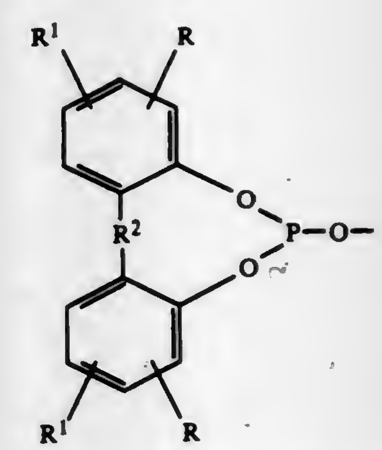

A′ is alkylene of 1 to 6 carbon atoms or cycloalkylene of 5 to 6 carbon atoms,

m′ is 1 or 2,

p is 0 or 1, and

q is 0–5,

with A, R, R^1, R^2 being as previously defined; provided that when p and q are 0, -N-A′-N can be a diazacycloalkyl group of 2 to 10 carbon atoms, or

when m is 1 and p is 0, N-R_3 is a azacycloalkyl group of 2 to 10 carbon atoms or an azaoxacycloalkyl group of 3 to 7 carbon atoms; and

R^4 is alkyl of 1 to 18 carbon atoms;

together with a phenolic antioxidant selected from the group consisting of 6,6′-ethylidene-bis(2,4-di-tert.butylphenol), 6,6′-methylene-bis(2,4-di-tert.butylphenol) and 1,3,5-tris(4-tert.butyl-3-hydroxy-2,6-dimethylbenzyl)isocyanurate.

4,374,220

IMIDE FLAME RETARDANTS AND COMPOSITIONS CONTAINING THEM

Joseph Sonnenberg, San Jose, Calif., assignor to Raychem Corporation, Menlo Park, Calif.

Division of Ser. No. 77,494, Sep. 21, 1979, which is a division of Ser. No. 760,664, Sep. 18, 1968, Pat. No. 4,166,605. This application May 14, 1981, Ser. No. 263,679

Int. Cl.^{3} C08K *5/34;* **C07D** *207/44*

U.S. Cl. 524—94 **46 Claims**

21. A composition comprising an inflammable macromolecular material; a bisimide of the formula

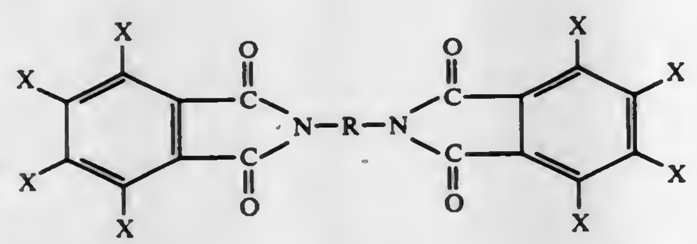

wherein R represents a divalent organic radical selected from the group consisting of alkylene radicals containing 2 to 18 carbon atoms, and divalent aryl, substituted aryl or aralkyl radicals selected from the group consisting of

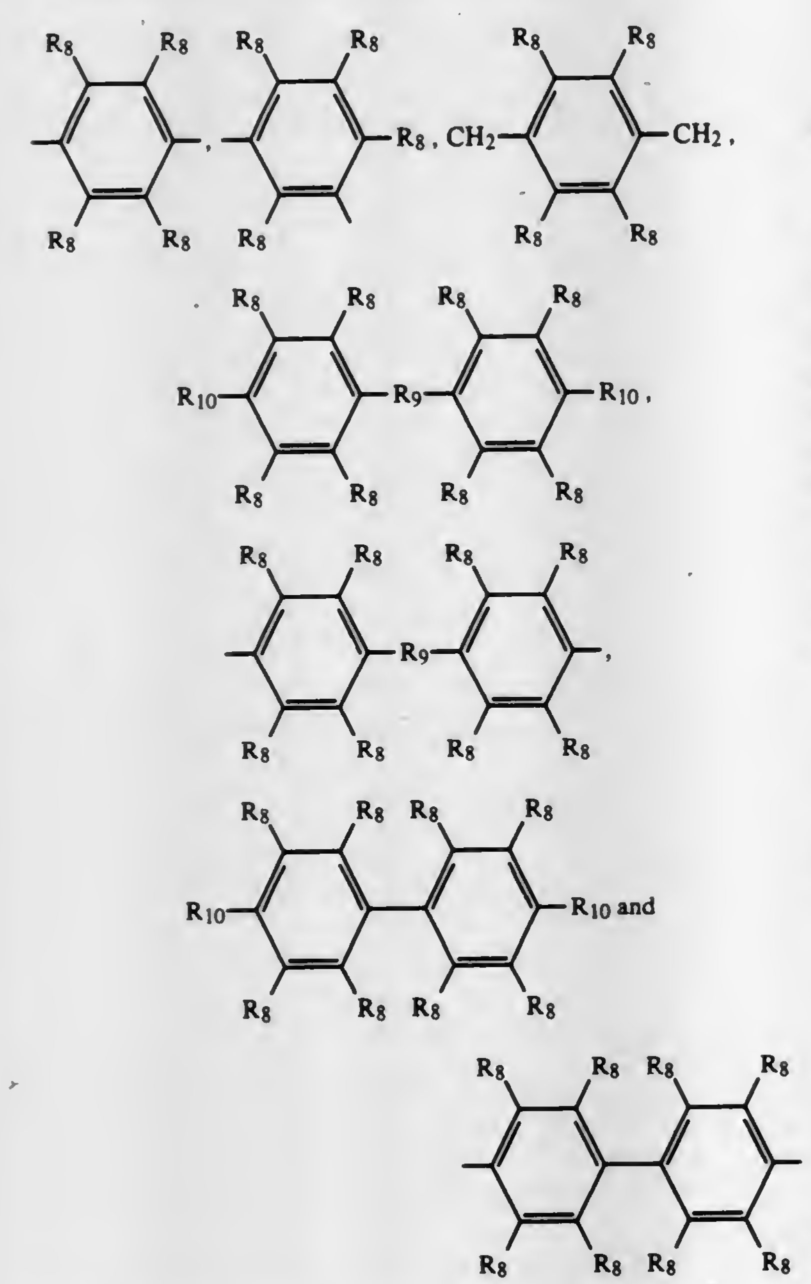

in which each R_8, which may be the same or different, represents a radical selected from the group consisting of hydrogen, an alkyl radical containing from 1 to 4 carbon atoms, bromine and chlorine, R_9 represents a radical selected from the group consisting of alkylene radicals, containing from 1 to 4 carbon atoms and hetero atoms and R_{10} represents an alkylene radical containing from 1 to 4 carbon atoms; and wherein each X is independently bromine or hydrogen with the proviso that at least 4 of the X's are bromine; and a compound of the element of Group V.

4,374,221

HIGH SOLIDS POLYAMIDE-IMIDE MAGNET WIRE ENAMEL

Charles W. McGregor, and Stephen E. Summers, both of Fort Wayne, Ind., assignors to Essex Group, Inc., Fort Wayne, Ind.

Filed Nov. 17, 1981, Ser. No. 322,114

Int. Cl.^{3} C08K *5/34*

U.S. Cl. 524—94 **23 Claims**

1. A magnet wire enamel comprising a high solids, low viscosity, low molecular weight polymer solvent solution of the reaction product of a polyisocyanate, an isocyanate blocking alcohol and trimellitic anhydride, the ratio of free isocyanate groups to total anhydride and carboxyl groups in the reaction product being about 0.99:1 to 0.85:1.

4,374,222

COMPOSITIONS CONTAINING MOLD RELEASE AGENTS

Louis W. Meyer, Lake Jackson, Tex., assignor to The Dow Chemical Company, Midland, Mich.

Continuation-in-part of Ser. No. 239,279, Mar. 2, 1981, abandoned. This application Sep. 30, 1981, Ser. No. 306,997

Int. Cl.^{3} C08K *5/16*

U.S. Cl. 524—241 **28 Claims**

1. In a process for the preparation of molded articles by injecting a polyurethane-forming composition containing at least one active hydrogen-containing material and at least one material containing an average of more than one —NCO group per molecule into a mold and thereafter removing a resultant polyurethane molded article therefrom; the improvement which comprises employing as said polyurethane-forming composition one which contains an effective amount of, as a mold release agent, at least one fatty acid amide having at least one of the hydrogen atoms attached to the nitrogen of an amide group replaced with a hydroxyl-containing substitutent.

4,374,223

ELASTIC COVER OF AN ELASTOMERIC MATERIAL

Cornelis Van Raamsdonk, Schortens, and Johann Wartusch, Vellmar, both of Fed. Rep. of Germany, assignors to Olympia Werke AG, Wilhelmshaven and Licentia Patent-Verwaltungs-GmbH, Frankfurt am Main, both of, Fed. Rep. of Germany

Filed Apr. 18, 1980, Ser. No. 141,699

Claims priority, application Fed. Rep. of Germany, Apr. 18, 1979, 2915643

Int. Cl.^{3} B41J *3/04;* **C08K** *5/05, 3/34*

U.S. Cl. 524—245 **13 Claims**

1. An elastic covering for closing off a nozzle outlet area containing at least one nozzle orifice of an ink printing head filled with an aqueous liquid, said covering consisting essentially of an elastomeric material having viscoelastic properties for filling exceedingly small cavities and interstices in the area to be closed off, wherein the elastomeric material comprises a mixture of a polar elastomer selected from the group consisting of butadiene-acrylonitrile copolymer and ethylene—vinyl acetate copolymers, a hydrophillic additive comprised of an adduct of ethylene oxide with amines, and at least one cross-linking ingredient.

4,374,224

TREE-RESISTANT ETHYLENE POLYMER COMPOSITIONS CONTAINING AROMATIC POLYCARBOXYLIC ACID

John K. Beasley, Wilmington, Del., and Edward J. Urban, Kennett Square, Pa., assignors to E. I. Du Pont de Nemours and Company, Wilmington, Del.

Filed Sep. 14, 1981, Ser. No. 301,513

Int. Cl.^{3} C08K *5/12*

U.S. Cl. 524—298 **11 Claims**

1. A tree-resistant composition for use in electrical equipment, said composition consisting essentially of an ethylene polymer selected from the group consisting of ethylene homopolymers and ethylene copolymers with at least one other ethylenically unsaturated monomer, ethylene being present in such copolymers in an amount of at least 85 weight percent, and, as a tree-growth inhibitor, an effective amount of at least one organic carboxylic ester having at least one aromatic ring and at least three carboxylic ester groups, said inhibitor melting below about 50° C. and being liquid at the power transmission cable's intended operating temperature.

4,374,225

METHOD OF FABRICATING AN ERASER

Takamasa Kawakubo, Shinmachi, and Kiyosi Hirasawa, Fujioka, both of Japan, assignors to Mitsubishi Pencil Co., Ltd., Tokyo, Japan

Filed Oct. 10, 1980, Ser. No. 196,088

Int. Cl.^{3} B43L *19/00*

U.S. Cl. 524—302 **5 Claims**

1. A method of fabricating an eraser comprising the step of mixing and kneading 50 to 800 parts by weight by factice, 0 to 500 parts by weight of filler and predetermined amount of pigment with 40 to 100 parts by weight of low crystallizable polyolefin graft copolymer thermoplastic elastomer obtained by conducting ethylene and α-olefin of stock materials by means of coordinating anionic polymerization and one type of graft reaction.

4,374,226

POLYCARBONATE HAVING IMPROVED HYDROLYTIC STABILITY

Parameswar Sivaramakrishnan, New Martinsville, W. Va., assignor to Mobay Chemical Corporation, Pittsburgh, Pa.

Continuation-in-part of Ser. No. 866,881, Jan. 4, 1978, abandoned, which is a continuation of Ser. No. 777,205, Mar. 14, 1977, abandoned, which is a continuation of Ser. No. 659,316, Feb. 19, 1976, abandoned. This application Jul. 31, 1978, Ser. No. 929,758

Int. Cl.^{3} C08K *5/09*

U.S. Cl. 524—399 **5 Claims**

1. A halogen-free moldable aromatic polycarbonate comprising:

(a) an aromatic polycarbonate resin; and

(b) a cadmium salt of an organic acid selected from the group consisting of cadmium 2-ethylhexanoate and cadmium laurate,

characterized in that said salt is present in said polycarbonate resin in an amount between 0.01 to 0.1% by weight based on the weight of said polycarbonate resin.

4,374,227

EXTRUDED GLOSS IMPROVEMENT IN PIPE BLENDS WITH LOW PRESSURE LOW DENSITY POLYETHYLENE

William J. Michie, Jr., Raritan, N.J., assignor to Union Carbide Corporation, Danbury, Conn.

Filed May 15, 1981, Ser. No. 263,887

Int. Cl.^{3} C08K *3/04*

U.S. Cl. 524—528 **22 Claims**

1. A thermoplastic pipe forming composition having

a nominal density of about 0.926 to 0.940 grams per cubic centimeter; and a melt index of about 0.1 to about 2.0 decigrams per minute,

and comprising, based on the total weight of said composition, about 40 to about 80 parts by weight of high density ethylene polymer having

a density of greater or equal to 0.941 to about 0.959 grams per cubic centimeter; and a melt index of about 0.1 to about 2.0 decigrams per minute, and

about 10 to about 50 parts by weight of a first low pressure, low density alkylene interpolymer having

a density of about 0.910 to 0.925 grams per cubic centimeter; and a melt index of about 0.1 to 2.0 decigrams per minute, and

about 5.5 to about 9.5 parts by weight of a concentrate comprising, based on the total weight of said concentrate, about 25 to about 45 parts by weight of carbon black, and from about 55 to about 75 parts by weight of a second low pressure, low density alkylene interpolymer having

a density of about 0.910 to 0.925 grams per cubic centimeter; and a melt index of about 0.1 to 2.0 decigrams per minute.

4,374,228

WHOLLY AROMATIC POLYESTER CAPABLE OF FORMING AN ANISOTROPIC MELT PHASE CONSISTING ESSENTIALLY OF PARA-OXYBENZOYL MOIETY, BROMO-SUBSTITUTED-PARA-OXYBENZOYL MOIETY, AND META-OXYBENZOYL MOIETY

Jeffrey T. Langley, Pineville, N.C., assignor to Fiber Industries, Inc., New York, N.Y.

Filed Aug. 3, 1981, Ser. No. 289,587

Int. Cl.^{3} C08G *63/02*

U.S. Cl. 524—599 **20 Claims**

1. A melt processable wholly aromatic polyester capable of forming an anisotropic melt phase at a temperature below approximately 300° C. consisting essentially of the recurring moieties I, II, and III wherein:

I is 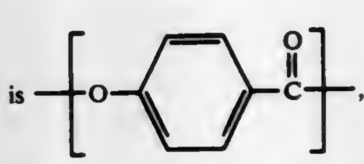,

II is 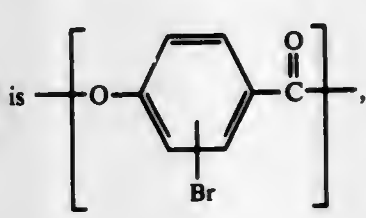, and

III is 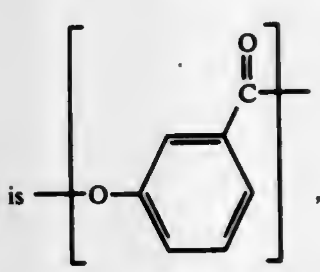,

wherein said polyester comprises approximately 35 to 70 mole percent of moiety I, approximately 15 to 45 mole percent of moiety II, and approximately 15 to 45 mole percent of moiety III.

4,374,229
THERMOSETTING RESINOUS MOLDING COMPOSITIONS

William R. Dunnavant; Richard E. Field, both of Columbus, and Dan Borgnaes, Westerville, all of Ohio, assignors to Ashland Oil, Inc., Ashland, Ky.

Continuation-in-part of Ser. No. 130,954, Mar. 17, 1980, abandoned, which is a continuation of Ser. No. 16,718, Mar. 1, 1979, abandoned. This application Nov. 12, 1981, Ser. No. 320,282
Int. Cl.³ C08L *75/06*
U.S. Cl. 525—28 **11 Claims**

1. A thermosetting resinous composition comprising an organic polyisocyanate coupled oligomeric polyester having a calculated molecular weight of from 200 to 800 terminated at one end with a hydroxy group and at the other end with a vinyl group and wherein the polyisocyanate and polyester are combined in the coupling reaction to provide an NCO/OH equivalent ratio value of from 0.8-1.2, said polyester prepared by the catalytically induced addition reaction of a dicarboxylic acid anhydride selected from the group consisting of maleic anhydride and a mixture of maleic anhydride and phthalic anhydride in which maleic anhydride constitutes the major proportion thereof with a lower alkylene oxide in the presence of methacrylic acid or acrylic acid as the initiator and wherein the maleate residues of said polyester are substantially completely isomerized to corresponding fumarate residues.

4,374,230
STABILIZED POLYOLEFIN COMPOSITIONS

John L. H. Allan, Glen Rock; Arnold B. Finestone, Woodcliff Lake, both of N.J., and John J. Roderick, Avon Lake, Ohio, assignors to El Paso Polyolefins Company, Paramus, N.J.

Division of Ser. No. 705,303, Jul. 14, 1976, abandoned. This application Mar. 28, 1979, Ser. No. 24,499
Int. Cl.³ C08L *23/00*
U.S. Cl. 525—134 **19 Claims**

1. A mono-α-olefin polymer composition stabilized against copper-activated accelerated oxidative degradation, which comprises:
a mono-α-olefin polymer and from about 0.1 to about 10 percent by weight based on the total weight of the composition of a polymeric compound as the sole copper deactivating agent, which polymeric compound has been prepared by a process comprising
(a) reacting at least one para-substituted phenol of the formula:

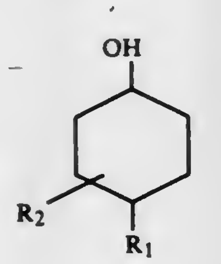

wherein
R_1 is a C_3-C_{30} group selected from alkyl, cycloalkyl, alkaryl or aryl and R_2 is either hydrogen, a sulfonic acid group or a sulfonic acid salt group;
with an aldehyde or ketone of the formula:

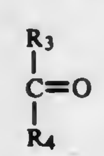

wherein
R_3 and R_4 independently from each other can be either hydrogen or a C_1-C_{36} group selected from alkyl, cycloalkyl, alkaryl or aryl,
in a molar ratio of aldehyde or ketone to phenol of at least about 2:1 in the presence of an alkaline catalyst; and
(b) condensing the product of step (a) under neutral or slightly acidic conditions.

10. The method of imparting stability to a mono-α-olefin polymer composition against copper-activated accelerated oxidative degradation, comprising:
incorporating into a mono-α-olefin polymer resin from about 0.1 to about 10 percent by weight based on the weight of the composition of a polymeric compound as the sole copper deactivating agent, which polymeric compound has been prepared by a process comprising:
(a) reacting at least one para-substituted phenol of the formula:

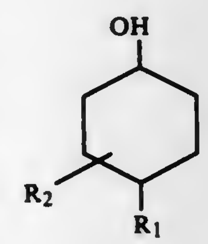

wherein
R_1 is a C_3-C_{30} group selected from alkyl, cycloalkyl, alkaryl or aryl and R_2 is either hydrogen, a sulfonic acid group or a sulfonic acid salt group,
with an aldehyde or ketone of the formula:

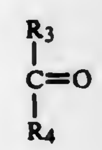

wherein
R_3 and R_4 independently from each other can be either hydrogen or a C_1-C_{36} group selected from alkyl, cycloalkyl, alkaryl or aryl,
in a molar ratio of aldehyde or ketone to phenol of at least about 2:1 in the presence of an alkaline catalyst; and
(b) condensing the product of step (a) under neutral or slightly acidic conditions.

4,374,231
ADHESIVE COMPOSITION

Jos Doucet, Kessel-Lo, Belgium, assignor to Raychem Corporation, Menlo Park, Calif.

Filed May 12, 1981, Ser. No. 262,871
Claims priority, application United Kingdom, May 13, 1980, 8015914
Int. Cl.³ C08L *77/00*
U.S. Cl. 525—179 **15 Claims**

1. A hot-melt adhesive composition comprising a polyamide based on one or more dimeric fatty acids and an ethylene/acrylic acid/butyl acrylate terpolymer containing free acid groups.

4,374,232
GRAFT COPOLYMER MEMBRANE AND PROCESSES OF MANUFACTURING AND USING THE SAME

William J. Davis, Wyomissing, Pa., assignor to Gelman Sciences Inc., Ann Arbor, Mich.

Division of Ser. No. 6,909, Jan. 26, 1979, Pat. No. 4,287,275. This application May 13, 1981, Ser. No. 263,222
Int. Cl.³ C08F *279/00*
U.S. Cl. 525—243 **21 Claims**

1. A process for preparing a graft copolymer film, sheet or coating, which comprises forming a reaction mixture comprising an organic polymeric substrate and an ethylenically unsaturated monomer dissolved in an organic solvent, initiating graft copolymerization of said polymeric substrate and said monomer by forming free radicals on said polymeric substrate in said reaction mixture and copolymerizing and crosslinking said polymeric substrate and said monomer while dissolved in said solvent to form a crosslinked graft copolymer of said polymeric substrate and said monomer in the form of a gel, subjecting said graft copolymer in said solvent to high shear forces to convert it from a gel to a thixotropic suspension containing said graft copolymer, forming said thixotropic suspension into a layer thereof on a support, and removing the solvent from said layer thereby to form the film, sheet or coating.

4,374,233
BLOCK COPOLYMERS OF POLYPHENYLENE OXIDES AND NON-STERICALLY-HINDERED HIGH MOLECULAR WEIGHT AROMATIC POLYCARBONATES

George R. Loucks, Scotia, and John R. Campbell, Clifton Park, both of N.Y., assignors to General Electric Company, Schenectady, N.Y.

Filed Apr. 2, 1981, Ser. No. 250,338
Int. Cl.³ C08L *71/04, 69/00*
U.S. Cl. 525—394 **3 Claims**

1. A block copolymer of a polyphenylene oxide and a non-sterically hindered high molecular weight polycarbonate consisting of chemically combined
(i) polyphenylene oxide blocks of the formula,

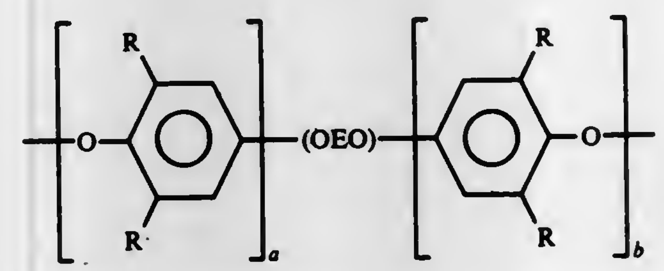

wherein independently the —(OEO)— is a divalent quinone residue, E is a divalent arene radical, either a or b is a number at least equal to 1, and the sum of a plus b is at least equal to 10, R is hydrogen, a hydrocarbon radical, a hydrocarbonoxy radical or a halohydrocarbonoxy radical,
(ii) non-sterically-hindered high molecular weight aromatic polycarbonate blocks of the formula,

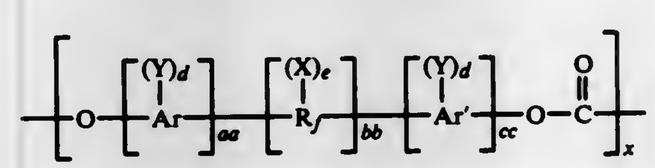

wherein R_f is selected from an alkylene, alkylidene, cycloalkylene, cycloalkylidene or arylene linkage or a mixture thereof, a linkage selected from the group consisting of ether, carbonyl, amine, a sulfur or phosphorous containing linkage, Ar and Ar' are arene radicals, Y is bromine, chlorine or a monovalent alkyl or alkoxy group, each d represents a whole number up to a maximum equivalent to the number of replaceable hydrogens substituted on the aromatic rings comprising Ar or Ar', subject to the proviso that when d is equal to two or more, no more than one Y group is ortho-positioned relative to an —OH group, X is bromine, chlorine or a monovalent hydrocarbon group selected from the class consisting of alkyl, aryl and cycloalkyl groups, e represents a whole number of from 0 to a maximum controlled by the number of replaceable hydrogens on R_f, aa, bb and cc represent whole numbers including 0, when bb is not zero, neither aa nor cc may be zero, otherwise either aa or cc but not both may be 0, when bb is zero, the aromatic groups can be joined by a direct carbon bond, x is a number at least equal to 30, and
(iii) carbonyl radicals of the formula

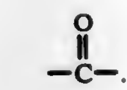

4,374,234
SMALL AMOUNTS OF ALUMINUM ALKYL OR DIHYDROCARBYL MAGNESIUM IN SLURRY OLEFIN POLYMERIZATION

Phil M. Stricklen, and John P. Hogan, both of Bartlesville, Okla., assignors to Phillips Petroleum Company, Bartlesville, Okla.

Filed May 22, 1981, Ser. No. 266,691
Int. Cl.³ C08F *4/46, 4/78*
U.S. Cl. 526—105 **11 Claims**

1. A polymerization process comprising contacting a monomer system comprising predominantly ethylene in a liquid hydrocarbon diluent under slurry polymerization conditions with a catalyst comprising chromium oxide supported on a silica-containing material, in the presence of a treating agent comprising (1) an organoaluminum compound selected from alkylaluminum compounds or alkylaluminum hydride compounds or (2) a dihydrocarbylmagnesium compound, said treating agent being present in an amount within the range of 0.2 to 1 parts by weight per million parts by weight of said diluent, said amount being an effective amount to reduce the induction period.

4,374,235
ANHYDRIDE CONTAINING POLYMERS DERIVED FROM ALKENYL SUCCINIC ANHYDRIDE

Billy M. Culbertson, Worthington; Larry K. Post, Columbus, both of Ohio, and Ann E. Aulabaugh, Madison, Wis., assignors to Ashland Oil, Inc., Ashland, Ky.

Filed Feb. 17, 1981, Ser. No. 234,750
Int. Cl.³ C08F *222/04, 222/06, 222/08, 222/40*
U.S. Cl. 526—262 **9 Claims**

1. A copolymer comprising the free radical initiated addition polymerization product of a first monomer having the following formula:

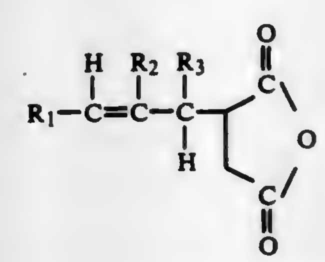

were R_1, R_2 and R_3 each represent H, substituted or unsubstituted alkyl and substituted or unsubstituted aryl; and
a second vinyl monomer selected from the group consisting of maleic anhydride, maleimide and substituted maleimides.

4,374,236
ELASTOMERS AND PROCESS FOR THEIR PREPARATION

Alexander P. Znaiden, Sloatsburg, N.Y., assignor to Avon Products, Inc., New York, N.Y.

Filed Aug. 27, 1981, Ser. No. 296,635
Int. Cl.³ C08L *83/06*
U.S. Cl. 528—26.5 **19 Claims**

1. An elastomeric material comprising a cured mixture of a member of the group consisting of a carboxylic acid and a carboxyl-containing natural oil and an alkoxy substituted amino alkyl dimethylpolysiloxane.

4,374,237

SILANE-CONTAINING ISOCYANATE-TERMINATED POLYURETHANE POLYMERS

Mitchell H. Berger, Somerville; Walter P. Mayer, Lebanon, and Robert J. Ward, Bridgewater, all of N.J., assignors to Union Carbide Corporation, Danbury, Conn.

Filed Dec. 21, 1981, Ser. No. 333,103

Int. Cl.³ C08G *18/38, 77/04, 77/26*

U.S. Cl. 528—28 **23 Claims**

1. A curable composition comprising the reaction product of an isocyanate terminated polyurethane prepolymer having at least two urethane linkages per polymer molecule and a bis silane, said reaction product having a number average molecular weight of about 750 to about 20,000 and having 2 to about 9 functional groups, per average molecular weight, selected from the group consisting of:

—NCO (1)

(2)

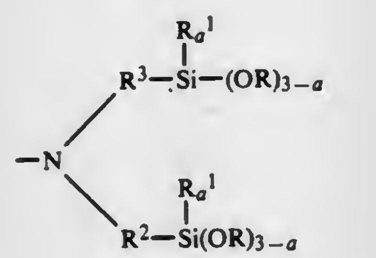

wherein

R is a lower alkyl having 1 to about 6 carbons;

R^1 is a lower alkyl having 1 to about 4 carbons;

each of R^2 and R^3 is an alkylene radical having 2 to 18 carbons or arylene radicals having 6 to 18 carbons, and

a is an integer having values of 0 to 2;

(3)

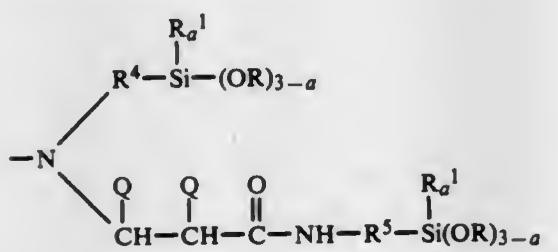

wherein

R, R^1 and a are as above,

each of R^4 and R^5 is an alkylene radical having 1 to 4 carbons, and

Q is a monovalent radical selected from the group consisting of hydrogen, alkyl having 1 to 4 carbons, phenyl, —COOR¹ or —CN; and

(4)

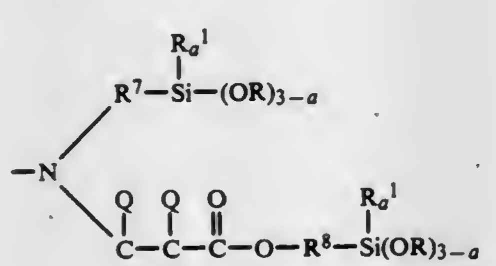

wherein

R, R^1 and a are as above,

each of R^7 and R^8 is an alkylene radical having 1 to 4 carbons, and

Q is a monovalent radical selected from the group consisting of hydrogen, alkyl having 1 to 4 carbons, phenyl, COOR¹ or —CN,

with the proviso that at least 0.1 percent of the total of said functional groups (1), (2), (3) and (4) is at least one of (2), (3), or (4).

4,374,238

ONE COMPONENT IN-MOLD COATING COMPOSITION COMPRISING A COMPOSITION HAVING A PLURALITY OF POLYMERIZABLE ETHYLENIC DOUBLE BONDS AND A MATERIAL CONTAINING ISOCYANATE

Henry Shanoski, Akron, Ohio, assignor to The General Tire & Rubber Company, Akron, Ohio

Division of Ser. No. 262,981, May 20, 1981, Pat. No. 4,331,735, which is a continuation-in-part of Ser. No. 163,444, Jun. 26, 1980, abandoned. This application Nov. 20, 1981, Ser. No. 323,213

Int. Cl.³ C08G *18/34*

U.S. Cl. 528—50 **12 Claims**

1. A one component composition useful as a thermosetting in-mold coating composition comprising

(a) a liquid crosslinkable composition having an average molecular weight of up to about 5,000, having a plurality of polymerizable ethylenic double bonds, being essentially free of active hydrogen atoms and being essentially free of isocyanate groups and

(b) a material selected from the group consisting of (I) a polyisocyanate and (II) the reaction product of an excess of equivalents of a polyisocyanate and an ethylenically unsaturated compound containing $—NH_2$, —NH— and/or —OH groups, said reaction product being free of active hydrogen atoms, said (b) being used in an amount sufficient to secure the adhesion of said coating composition to a molded thermoset polyester resin or vinyl ester resin glass fiber composition.

4,374,239

PROCESS FOR PREPARING POLYARYLATES

Mitchell H. Berger, Somerville; Louis M. Maresca, Belle Mead, and Ulrich A. Steiner, North Plainfield, all of N.J., assignors to Union Carbide Corporation, Danbury, Conn.

Continuation-in-part of Ser. No. 126,994, Mar. 3, 1980, abandoned. This application Aug. 18, 1981, Ser. No. 293,930

Int. Cl.³ C08G *63/18, 63/20, 63/66*

U.S. Cl. 528—176 **12 Claims**

1. A process for preparing polyarylate having a reduced viscosity of from about 0.5 to greater than 1.0 dl/gm, which process comprises reacting, at a temperature of from about 260 to about 350° C:

(a) at least one diester derivative of a dihydric phenol having the following formula:

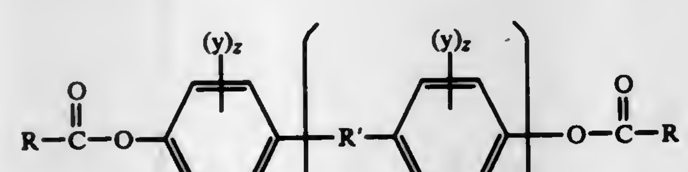

wherein R is independently selected from an alkyl radical having from 1 to about 6 carbon atoms or cycloalkyl having from 4 to about 7 carbon atoms, y is independently selected from alkyl groups of 1 to 4 carbon atoms, chlorine, or bromine, z independently has a value of from 0 to 4, inclusive, and R′ is independently selected from a divalent saturated aliphatic hydrocarbon radical having 1 to 8 carbon atoms, a cycloalkylene or cycloalkylidene readical having up to and including 9 carbon atoms, O, S, SO, SO_2, CO, x is 0 or 1; with

(b) at least one aromatic dicarboxylic acid, in the presence of from about 10 to about 60 weight percent, based on the polyarylate produced, of at least one halogenated and/or etherated substituted aromatic or heteroaromatic compound, said reaction being conducted in the absence of a catalyst, and wherein the halogenated and/or etherated substitued aromatic or hereroaromatic compound is of the following formulae:

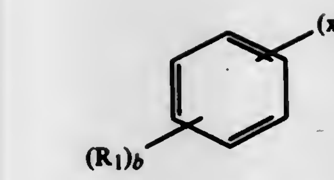

(I)

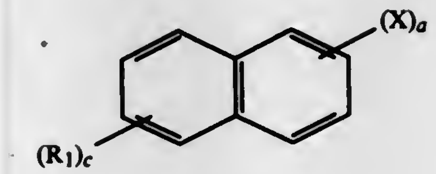

(II)

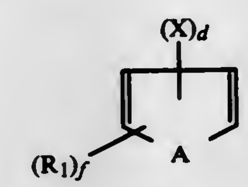

(III)

wherein X is independently Cl, Br, F, or OR_2, a is an integer of 1 to 5, R_1 is independently alkyl of 1 to 16 carbon atoms, cycloalkyl of 6 to 18 atoms, aryl of 6 to 18 carbon atoms, or aralkyl or alkaryl of 7 to 18 carbon atoms, R_2 is independently alkyl of 1 to 16 carbon atoms or cycloalkyl of 6 to 18 carbon atoms, A is O, S, or —CH=N—, b is an integer of 0, 1, or 2, c is an integer of 0 to (8-a), d is an integer of 1 to 4, f is an integer of 0 to (4-d), with the proviso that the halogenated and/or etherified substitued aromatic compounds are free from benzylic and/or tertiary hydrogen atoms.

4,374,240

POLYMER COMPOSITIONS COMPRISING HEMIACETALS OF ADDUCTS OF ACROLEIN AND ISOCYANURIC ACID

Saul M. Cohen, Springfield, and John R. LeBlanc, Wilbraham, both of Mass., assignors to Monsanto Company, St. Louis, Mo.

Filed Dec. 22, 1980, Ser. No. 219,391

The portion of the term of this patent subsequent to Oct. 6, 1998, has been disclaimed.

Int. Cl.³ C07D *251/34;* **C08G** *4/00*

U.S. Cl. 528—230 **13 Claims**

1. A composition comprising a polyfunctional hemiacetal-reactive compound and a hemiacetal of a monohydric primary or secondary alcohol and an acrolein-isocyanuric acid adduct.

4,374,241

NITROPOLYFORMALS

Horst G. Adolph, Silver Spring, Md., assignor to The United States of America as represented by the Secretary of the Navy, Washington, D.C.

Filed Jan. 29, 1982, Ser. No. 343,810

Int. Cl.³ C08G *12/04*

U.S. Cl. 528—266 **7 Claims**

1. A nitropolyformal of the formula

$$H\!-\!\!\left[OCH_2C(NO_2)_2ZC(NO_{22}CH_2OCH_2\right]_n\!OCH_2C(NO_2)_2ZC(NO_2)_2CH_2OH$$

wherein Z is selected from the group consisting of $—CH_2—$, $—CH_2CH_2$, $—CH_2CH_2CH_2—$, $—CH_2OCH_2—$, and $—CH_2NHCH_2—$and wherein the average molecular weight of the homopolymer molecules is from about 1,000 to about 50,000.

4,374,242

LAYERED ORGANOARSENOUS INORGANIC POLYMERS

Martin B. Dines, Santa Ana, and Peter M. DiGiacomo, Mission Viejo, both of Calif., assignors to Occidental Research Corporation, Irvine, Calif.

Filed Jul. 24, 1979, Ser. No. 60,078

Int. Cl.³ C07F *7/00;* **C08G** *79/00*

U.S. Cl. 528—395 **14 Claims**

1. Process of preparing a solid, layered organoarsenous, inorganic polymer comprising reacting an organoarsenic acid with at least one tetravalent metal ion by refluxing the organoarsenic acid and tetravalent metal ion in a liquid medium.

4,374,243

POLYHEXAMETHYLENIMINE AND PROCESS FOR ITS PREPARATION

Hitoshi Yuasa, and Hirosuke Imai, both of Yokohama, Japan, assignors to Nippon Oil Company, Ltd., Tokyo, Japan

Division of Ser. No. 127,063, Mar. 4, 1980, Pat. No. 4,309,324, which is a division of Ser. No. 946,528, Sep. 26, 1978, Pat. No. 4,216,307. This application Sep. 25, 1981, Ser. No. 305,843

Claims priority, application Japan, Sep. 29, 1977, 52-116149; Mar. 16, 1978, 53-29265; Jun. 7, 1978, 53-67617; Jun. 9, 1978, 53-68959

Int. Cl.³ C08G *73/02;* **C07C** *83/00*

U.S. Cl. 528—422 **4 Claims**

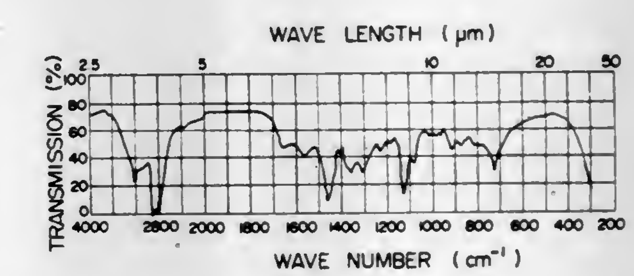

1. A process for preparing polyhexamethylenimine having an average degree of polymerization of at least 3, which comprises condensing hexamethylenediamine at a temperature of from 50° to 300° C. in the presence of a palladium catalyst selected from the group consisting of metallic palladium and palladium compounds to form polyhexamethylenimine, removing the catalyst from the reaction mixture, and recovering the polyhexamethylenimine.

4,374,244

LINEAR QUATERNARY AMMONIUM POLYMERS

Harold A. Green, Havertown, Pa.; John J. Merianos, Jersey City, and Alfonso N. Petrocci, Glen Rock, both of N.J., assignors to Kewanee Industries, Inc., New York, N.Y.

Continuation-in-part of Ser. No. 29,778, Apr. 13, 1979, Pat. No. 4,304,910, which is a continuation-in-part of Ser. No. 902,894, May 4, 1978, Pat. No. 4,190,644, which is a continuation-in-part of Ser. No. 744,617, Nov. 24, 1976, Pat. No. 4,089,977. This application Nov. 17, 1980, Ser. No. 206,997

Int. Cl.³ C07D *401/14;* **C07C** *87/46*

U.S. Cl. 542—476 **6 Claims**

1. A compound or mixture of compounds having the structure:

$$Y\!-\!\left[\underset{X^-}{\overset{\oplus}{Z}}NR'R''\!-\!Z'\underset{X^-}{\overset{\oplus}{N}}R'R''\right]_n\!\!-Z-Y'$$

wherein (I) R′ and R″ may be the same or different alkyl groups of from 1 to 18 carbon atoms, optionally substituted by from 1 to 2 hydroxyl groups or, (II) when taken together, will form a saturated or unsaturated ring of from 5 to 7 atoms, or (III) when taken together with N and an oxygen atom form the

N-morpholino group; wherein Z is —CH_2CH=$CHCH_2$— when Z' is —$CH_2CHOHCH_2$— or Z is —$CH_2CHOHCH_2$— when Z' is —CH_2CH=$CHCH_2$—; wherein X is a halogen of atomic weight greater than 30; wherein Y and Y' may be either the same or different and may be either X or —NR'R"; and wherein n is an integer of from 2 to 20.

4,374,245

8-[3-(6-FLUORO-1,2-BENZISOXAZOL-3-YL)PROPYL]-1-PHENYL-1,3,8-TRIAZASPIRO[4.5]DECAN-4-ONE

Larry Davis, Sergeantsville, and Joseph T. Klein, Somerville, both of N.J., assignors to Hoechst-Roussel Pharmaceuticals Inc., Somerville, N.J.

Filed Apr. 9, 1982, Ser. No. 366,246

Int. Cl.[3] C07D *413/14*

U.S. Cl. 546—20 3 Claims

1. A compound of the formula

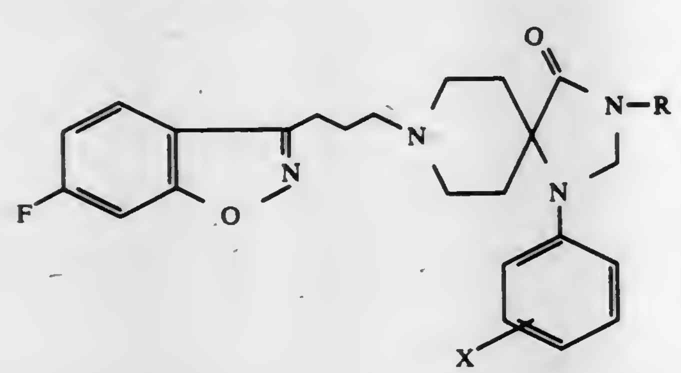

wherein R is hydrogen or loweralkyl; X is hydrogen, loweralkyl, loweralkoxy, halogen or trifluoromethyl; the optical antipods thereof, or pharmaceutically acceptable acid addition salts thereof.

4,374,246

1-N-[(1-CARBOXY-3-PHENYLPROPYL)GLYCYL]-1,2,3,4-TETRAHYDROQUINOLINE-2-CARBOXYLIC ACID COMPOUNDS

George C. Wright, and Ronald E. White, both of Norwich, N.Y., assignors to Norwich Eaton Pharmaceuticals, Inc., Norwich, N.Y.

Filed Jun. 18, 1981, Ser. No. 275,064

Int. Cl.[3] C07D *215/12, 215/16*

U.S. Cl. 546—156 3 Claims

1. A compound of the formula:

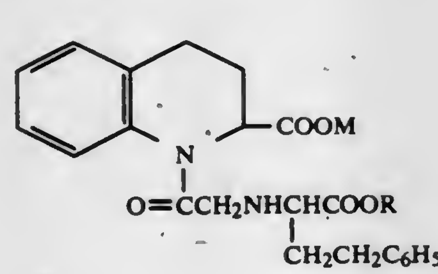

wherein

M is hydrogen or sodium and

R is hydrogen or ethyl.

4,374,247

PROCESS FOR PREPARING 2,2-DISUBSTITUTED THIAZOLIDINES

Yasuko Osawa, Tokyo, and Saburo Uchikuga, Yokohama, both of Japan, assignors to Sogo Pharmaceutical Co., Ltd., Sagamihara, Japan

Filed Jun. 4, 1980, Ser. No. 156,488

Claims priority, application Japan, Dec. 7, 1979, 54-158130

Int. Cl.[3] C07D *277/04, 277/60*

U.S. Cl. 548—146 5 Claims

1. A process for preparing a 2,2-disubstituted thiazolidine having the formula

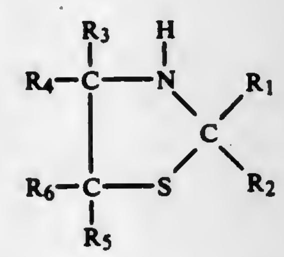

wherein: R_1 and R_2 are each an alkyl group of from one to five carbon atoms or phenyl group, or R_1 is joined with R_2 to form a cyclohexane ring; and R_3, R_4, R_5, and R_6 are hydrogen or lower alkyl, the process comprising the step of

reacting aminoalkyl hydrogensulfate of the formula

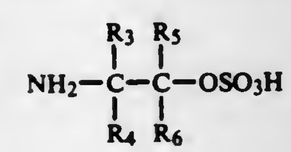

wherein: R_3, R_4, R_5 and R_6 are defined above,

with a compound having hydrosulfide ion (^-SH) and selected from the group consisting of sodium hydrosulfide, potassium hydrosulfide, sodium sulfide and potassium sulfide,

in the presence of ketone capable of reacting with said aminoalkyl hydrogensulfate to produce said thiazolidine, said ketone having the formula

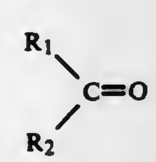

wherein: R_1 and R_2 are defined above, and thereby obtaining said thiazolidine.

4,374,248

3,4-DISUBSTITUTED-1,2,5-THIADIAZOLE-1-OXIDE COMPOUNDS

Ronnie R. Crenshaw, Dewitt, and Aldo A. Algieri, Fayetteville, both of N.Y., assignors to Bristol-Myers Company, New York, N.Y.

Division of Ser. No. 240,034, Mar. 3, 1981, which is a continuation-in-part of Ser. No. 163,831, Jul. 7, 1980, abandoned, which is a continuation-in-part of Ser. No. 117,182, Jan. 31, 1980, abandoned, which is a continuation-in-part of Ser. No. 72,517, Sep. 4, 1979, abandoned. This application Jun. 23, 1981, Ser. No. 276,586

Int. Cl.[3] C07D *285/10*

U.S. Cl. 548—135 3 Claims

1. A compound of the formula

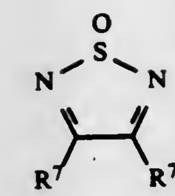

wherein each R^7 is halogen, (lower)alkoxy or (lower)alkylthio, or phenoxy or phenylthio which may contain 1 or 2 substituents selected from halogen, (lower)alkyl, (lower)alkoxy and nitro.

4,374,249

[4R]-3-(ω-AROYLPROPIONYL)-4-THIAZOLIDINECARBOXYLIC ACIDS AND ESTERS

Daniel B. Moran, Suffern, and Jay D. Albright, Nanuet, both of N.Y., assignors to American Cyanamid Company, Stamford, Conn.

Filed Dec. 23, 1980, Ser. No. 219,766

Int. Cl.[3] C07D *277/04*

U.S. Cl. 548—201 20 Claims

1. A compound selected from the group consisting of those of the formulae:

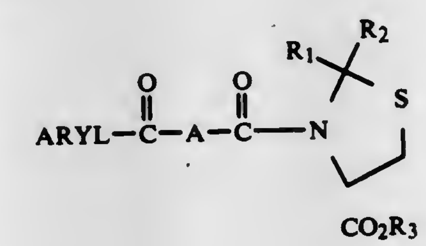

wherein A is

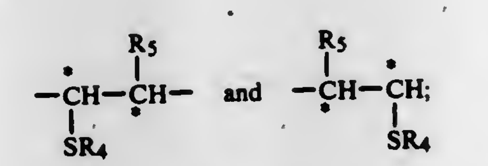

R_1 and R_2 are selected from the group consisting of hydrogen, lower alkyl (C_1–C_3), phenyl and mono substituted phenyl, wherein the substituents are chloro, fluoro, trifluoromethyl, lower alkyl (C_1–C_4), and methoxy, with the proviso that when R_1 is phenyl or substituted phenyl, R_2 must be hydrogen; R_3 is hydrogen, or lower alkyl having from 1–4 carbon atoms; R_4 is selected from the group comprising hydrogen, benzoyl and lower alkanoyl (C_1–C_4); R_5 is hydrogen and lower alkyl having from 1–3 carbon atoms; ARYL is selected from the group consisting of 1-naphthyl, 2-naphthyl, 4-chloro-1-naphthyl, 4-methoxy-1-naphthyl, 5,6,7,8-tetrahydro-1-naphthyl, 5,6,7,8-tetrahydro-2-naphthyl, 4-biphenylyl, 5-indanyl, 4-indanyl and moieties of the formula:

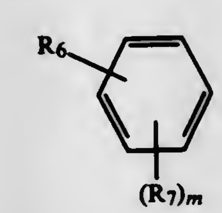

wherein R_6 is selected from the group consisting of hydrogen, fluoro, chloro, bromo, trifluoromethyl, cyano, phenoxy, halophenoxy, phenylthio, halophenylthio, alkyl having from 1–4 carbon atoms and alkoxy having from 1–4 carbon atoms; where m is zero, one or two; and the pharmacologically acceptable cationic salts thereof.

4,374,250

METHOD OF PRODUCING BENZIMIDAZOLONE

Tsuneaki Hirashima, and Toshiyuki Miyata, both of Sakai, Japan, assignors to Osaka Municipal Government, Japan

Filed Jun. 22, 1981, Ser. No. 275,618

Claims priority, application Japan, Jun. 23, 1980, 55-84701; Dec. 30, 1980, 55-186986

Int. Cl.[3] C07D *235/26*

U.S. Cl. 548—305 14 Claims

1. A method of producing benzimidazolone which comprises reacting a reactant selected from the group consisting of o-nitroaniline or o-dinitrobenzene with carbon monoxide in a solvent in the presence of selenium, a base selected from the group consisting of tertiary amines, amides and inorganic bases selected from the group consisting of hydroxides, oxides, carbonates, bicarbonates and sulfides of alkali metals and alkaline earth metals, and water, said reactant containing no additional substituents or containing substituents which are substantially inert in said reaction.

4,374,251

IMIDAZOLINE CONTAINING IMIDAZOLES

Graham J. Durant, Welwyn Garden City; John C. Emmett, Codicote, and Charon R. Ganellin, Welwyn Garden City, all of England, assignors to Smith Kline & French Laboratories Limited, Welwyn Garden City, England

Division of Ser. No. 7,755, Jan. 30, 1979, Pat. No. 4,260,744, which is a division of Ser. No. 778,812, Mar., 1977, Pat. No. 4,153,793, which is a division of Ser. No. 619,724, Oct. 6, 1975, Pat. No. 4,035,374, which is a division of Ser. No. 463,647, Apr. 24, 1974, Pat. No. 3,932,644. This application Nov. 14, 1980, Ser. No. 206,819

Claims priority, application United Kingdom, May 3, 1973, 21063/73; Jul. 26, 1973, 3551/73

Int. Cl.[3] C07D *233/88*

U.S. Cl. 548—309 9 Claims

1. A compound of the formula:

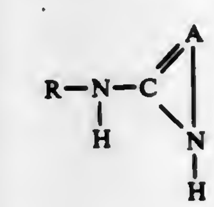

wherein A taken together with the nitrogen and carbon atoms shown forms an imidazoline ring, said ring having a keto or thione group and optionally substituted by one or two lower alkyl, phenyl or benzyl groups; R is a grouping of the formula:

Het—$CH_2Z(CH_2)_n$—

wherein Het is an imidazole ring, said ring being optionally substituted by lower alkyl, amino, hydroxy or halogen; Z is sulphur or a methylene group and n is 2 or 3 or a pharmaceutically acceptable acid addition salt thereof.

4,374,252

BENZYL 5-METHYL-4-IMIDAZOLECARBOXYLATE

Harold Graboyes, Philadelphia; Thomas J. Kasper, Media, and Praful D. Vaidya, Warminster, all of Pa., assignors to SK&F Lab Co., Carolina, P.R.

Division of Ser. No. 195,278, Oct. 8, 1980, Pat. No. 4,328,349. This application Dec. 10, 1981, Ser. No. 329,164

Int. Cl.[3] C07D *233/90*

U.S. Cl. 548—343 1 Claim

1. Benzyl 5-methyl-4-imidazolecarboxylate.

4,374,253
METHOD FOR PREPARING 1-ARYL-3-ARYLAMINO-2-PYRAZOLIN-5-ONES FROM N-ARYL-3-ARYLAMINO-3-OXIMINOPROPIONAMIDES

Chang-Kyu Kim, Rochester, and Cataldo A. Maggiulli, Pittsford, both of N.Y., assignors to Eastman Kodak Company, Rochester, N.Y.

Filed Sep. 28, 1981, Ser. No. 306,622
Int. Cl.³ C07D *231/52*
U.S. Cl. 548—360 23 Claims

1. A method for preparing a 1-aryl-3-arylamino-2-pyrazolin-5-one, which method comprises the steps of:
(a) reacting an N-aryl-3-arylamino-3-oximinopropionamide, represented by the structural formula

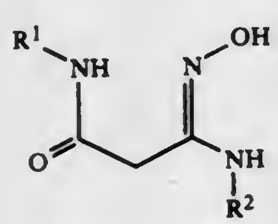

wherein each of R^1 and R^2 is phenyl or phenyl substituted with at least one halo, nitro, alkyl, alkoxy, sulfamoyl or substituted sulfamoyl group, with an acylating agent in an inert solvent to form an N-aryl-3-arylamino-3-(O-acyloximino)propionamide;
(b) heating the N-aryl-3-arylamino-3-(O-acyloximino)propionamide in contact with a strong acid catalyst and a dehydrating agent in an inert solvent to a temperature sufficient to effect dehydrative cyclization and rearrangement of the N-aryl-3-arylamino-3-(O-acyloximino)propionamide to form a 3-(N-acylarylamino)-1-aryl-2-pyrazolin-5-one; and
(c) heating the 3-(N-acylarylamino)-1-aryl-2-pyrazolin-5-one in contact with an acid in water and a lower alkanol to effect hydrolysis of the 3-(N-acylarylamino)-1-aryl-2-pyrazolin-5-one to form the 1-aryl-3-arylamino-2-pyrazolin-5-one.

4,374,254
PROCESS FOR PRODUCING SUBSTITUTED PYRROLES

James T. F. Kao, and Wayne D. Jensen, both of Baton Rouge, La., assignors to Ethyl Corporation, Richmond, Va.

Filed Jan. 23, 1981, Ser. No. 228,174
Int. Cl.³ C07D *207/323*
U.S. Cl. 548—527 10 Claims

1. A process for preparing a substituted pyrrole compound of the formula

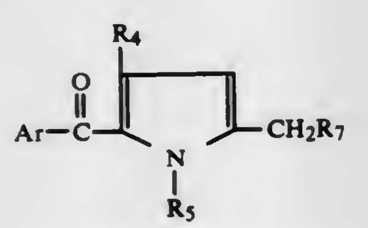

wherein the foregoing formula, said R_4 and R_5 each are independently selected from loweralkyl, and said R_7 is COOM in which M is an alkali metal, and Ar is selected from phenyl, thienyl, 5-methylthienyl, monosubstituted phenyl and polysubstituted phenyl, each substituent of said substituted phenyls being a member selected from the group consisting of halo, loweralkyl, trifluoromethyl, loweralkoxy, nitro, amino, cyano and methylthio, which comprises the steps of (a) contacting a crude aqueous mixture containing a 1-R_5-4-R_4-5-aroylpyrrole-2-acetic acid with a mixed organic extractant therefor said mixed organic extractant comprising a mixture of an organic hydrocarbon compound selected from benzene, xylene, and toluene and a lower alkanol selected from methanol, ethanol and propanol so that the pyrrole is extracted into the organic phase, (b) separating the phases, (c) treating the organic phase with a basic aqueous extractant selected from an aqueous alkali metal or alkaline earth metal hydroxide so that the pyrrole salt formed is extracted into the aqueous phase, (d) separating the phases, (e) contacting the pyrrole with a decolorizing agent and (f) recovering the resulting substituted pyrrole compound of the general formula above.

4,374,255
PROCESS FOR PRODUCING SUBSTITUTED PYRROLES

James T. F. Kao, and Robert E. Farritor, both of Baton Rouge, La., assignors to Ethyl Corporation, Richmond, Va.

Continuation-in-part of Ser. No. 137,249, Apr. 4, 1980, abandoned. This application Mar. 2, 1981, Ser. No. 239,431
Int. Cl.³ C07D *207/337*
U.S. Cl. 548—531 7 Claims

1. In a process for the preparation of a loweralkyl 1,4-diloweralkyl-3-loweralkoxycarbonyl-pyrrole-2-acetate of the formula:

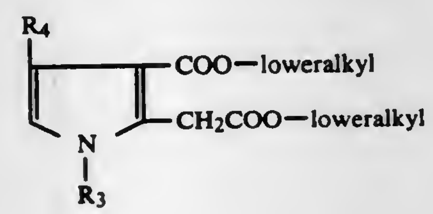

by reacting a chloromethyl loweralkyl ketone of the formula: Cl—CH_2—CO—R_4, with a diloweralkyl acetone dicarboxylate of the formula:

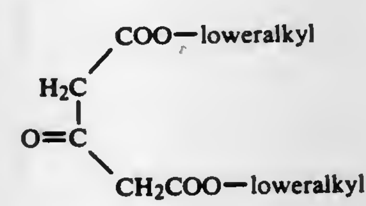

and an aqueous solution of a loweralkylamine of the formula: R_3NH_2, wherein the foregoing formulas said R_3 and said R_4 represent loweralkyl, the improvement comprising carrying out the reaction in the presence of a lower alkanol having from 1 to about 6 carbon atoms at a molar ratio of from about 0.1 to about 18 moles of said alkanol to each mole of said diloweralkyl acetone dicarboxylate.

4,374,256
PROCESS FOR THE PREPARATION OF PYRRYL-2-ACETONITRILE

James T. F. Kao, and Karl E. Wiegand, both of Baton Rouge, La., assignors to Ethyl Corporation, Richmond, Va.

Continuation of Ser. No. 582,860, Jun. 2, 1975, abandoned. This application Feb. 2, 1979, Ser. No. 8,943
Int. Cl.³ C07D *207/337*
U.S. Cl. 548—561 6 Claims

1. In a process for the production of pyrryl-2-acetonitriles of the formula

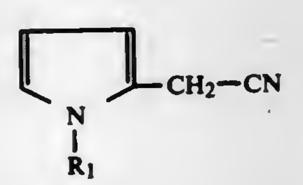

wherein R_1 is hydrogen or an alkyl group having 1–4 carbon atoms by reacting a dialkyl-(pyrryl-2-methyl)-amine corresponding to the formula

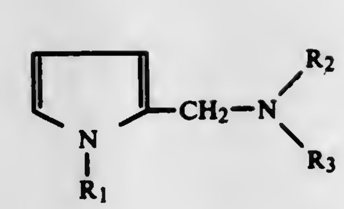

wherein R_1 is defined as above and R_2 and R_3 are independently selected from the same or different alkyl groups having 1 to about 4 carbon atoms with an alkyl halide alkylating agent to form the corresponding quaternary salt and displacing the amine group on said salt with aqueous alkali metal cyanide in the presence of a water-immiscible solvent in which the product pyrryl-2-acetonitrile is soluble, the improvement consisting essentially of alkylating said dialkyl-(pyrryl-2-methyl)-amine with methyl chloride while maintaining a temperature in the range of about 30° to about 40° C. and the pressure at from 20 to about 150 psig to form the corresponding quaternary salt and displacing the amine group from said salt by reaction of about 110 to 180 percent by weight of the stoichiometric amount of said alkali metal cyanide based on said dialkyl-(pyrryl-2-methyl)-amine at a temperature of about 75° to about 100° C. in the presence of from about 1.5 to about 10 parts of said solvent per part of said dialkyl-(pyrryl-2-methyl)-amine, said exothermic displacement reaction being controlled by addition to a mixture of said aqueous alkali metal cyanide and water-immiscible solvent of from about 3.5 to about 10 parts by weight of the quaternary salt aqueous phase per part of said mixture.

4,374,257
NOVEL ETHERS CONTAINING A LACTONE GROUP AND A CHIRAL ATOM

Jacques Martel, Bondy; Jean Tessier, Vincennes, and Andre Teche, Nanterre, all of France, assignors to Roussel Uclaf, Paris, France

Division of Ser. No. 21,833, Mar. 19, 1979, Pat. No. 4,265,817. This application Feb. 6, 1981, Ser. No. 232,117
Claims priority, application France, Mar. 17, 1978, 78 07778
Int. Cl.³ C07D *307/93, 307/94*
U.S. Cl. 549—302 6 Claims

1. An ether containing chiral atoms having a formula selected from the group consisting of

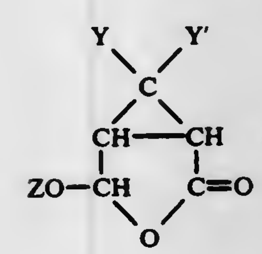

and

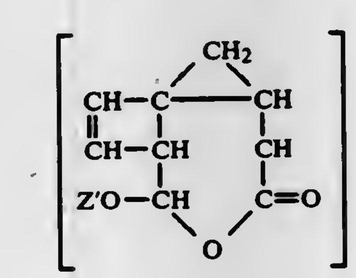

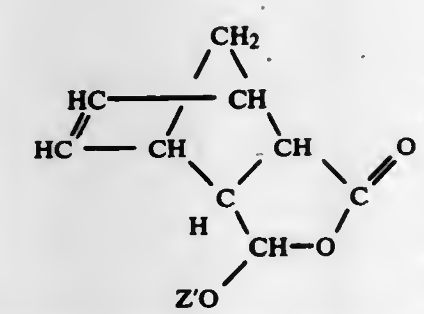

wherein Y and Y' are individually selected from the group consisting of hydrogen, fluorine, bromine, chlorine and alkyl of 1 to 6 carbon atoms, Z is selected from the group consisting of a α-cyano-3-phenoxy-benzyl and α-ethynyl-3-phenoxy-benzyl and Z' is selected from the group consisting of 2-methyl-3-(2-propen-1-yl)-4-oxo-cyclopent-2-enyl, α-methyl-3-phenoxybenzyl and 2-isopropyl-5-methyl-cyclohexyl with the proviso that Z is not (R) or (S) α-cyano-3-phenoxy-benzyl when Y and Y' are both methyl.

4,374,258
CHROMAN-6-OL DERIVATIVES USEFUL FOR STABILIZING PLASTICS

Michael Horner, Neustadt, and Gernot Teege, Ludwigshafen, both of Fed. Rep. of Germany, assignors to BASF Aktiengesellschaft, Fed. Rep. of Germany

Filed Jan. 28, 1982, Ser. No. 343,762
Claims priority, application Fed. Rep. of Germany, Feb. 4, 1981, 3103740
Int. Cl.³ C07D *311/72*
U.S. Cl. 549—407 1 Claim

1. A chroman derivatives of the general formula I

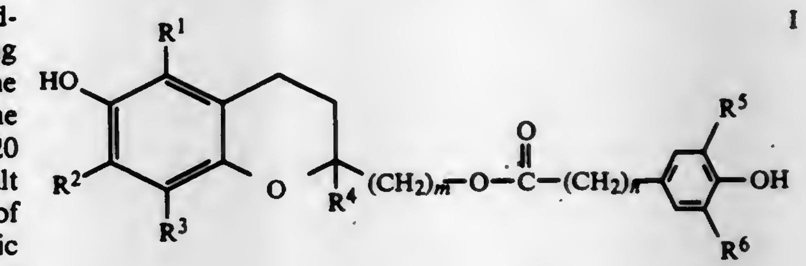
I

where R^1, R^2, R^3 and R^4 are each H or C_1-C_4-alkyl, R^5 is sec.-C_3-C_8-alkyl or tert.-C_4-C_8 alkyl, R^6 is H or R^5, m is 1, 2 or 3, and n is 0, 1, 2 or 3.

4,374,259
PROCESS FOR CONVERTING SUBSTITUTED ETHYLENE CARBONATES INTO SUBSTITUTED ETHYLENE OXIDES USING TIN CATALYSTS

Edward E. McEntire, Austin, Tex., assignor to Texaco Development Corporation, White Plains, N.Y.

Continuation-in-part of Ser. No. 920,906, Jun. 29, 1978, abandoned. This application Nov. 16, 1979, Ser. No. 95,031
Int. Cl.³ C07D *317/36*
U.S. Cl. 549—518 25 Claims

1. A process for the preparation of a substituted ethylene epoxide of the formula

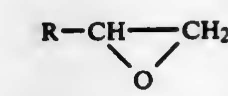

wherein R is alkyl, aryl, substituted alkyl or substituted aryl which comprises heating the corresponding substituted ethylene carbonate having the formula

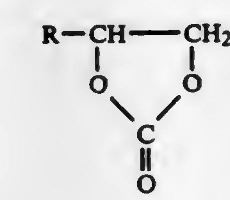

wherein R is defined as above in the presence of a catalytic amount of an organo-tin catalyst wherein the tin is tin(IV).

4,374,260
ETHYLENE OXIDE PRODUCTION

Stanley B. Cavitt, Austin, Tex., assignor to Texaco Inc., White Plains, N.Y.

Continuation-in-part of Ser. No. 893,726, Apr. 5, 1978, abandoned, which is a continuation-in-part of Ser. No. 719,042, Aug. 30, 1976, Pat. No. 4,097,414. This application Jun. 24, 1982, Ser. No. 391,651
Int. Cl.³ C07D *301/10*
U.S. Cl. 549—534 15 Claims

1. An improved method for epoxidizing ethylene to ethylene oxide in the vapor phase, which comprises the step of intimately contacting ethylene with a molecular oxygen-containing epoxidizing agent in the presence of a cesium-modified,

supported silver catalyst at epoxidizing temperatures from about 200° C. to about 300° C., wherein the catalyst is prepared by contacting a porous, inorganic, catalyst support material with an impregnating solution; and, heating the impregnated support material at temperatures from about 50° C. to 300° C. to evaporate volatiles and activate said catalyst, wherein said impregnating solution comprises an effective amount of a cesium salt in solution with a silver carboxylate/amine complex of a silver carboxylate dissolved in a solubilizing amount of an amine-containing complexing agent comprising diethylenetriamine.

4,374,261

1-ETHYL-1,4-DIHYDRO-6-(2-NAPHTHYL)-4-OXO-NICOTINIC ACID AND ESTERS THEREOF

Alexander E. Wick, Le Mesnil-le Roy, France, assignor to Hoffmann-La Roche Inc., Nutley, N.J.

Division of Ser. No. 235,870, Feb. 19, 1981, which is a division of Ser. No. 166,506, Jul. 7, 1980. This application Oct. 28, 1981, Ser. No. 315,780

Int. Cl.³ C07C *69/76*

U.S. Cl. 560—51 **1 Claim**

1. A compound of the formula

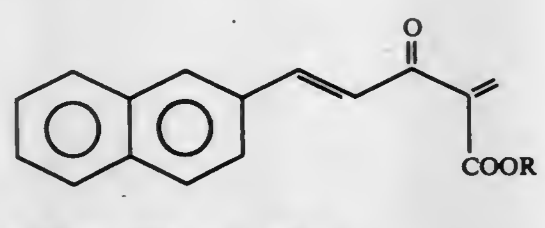

wherein R is hydrogen or C_{1-6}-alkyl.

4,374,262

PREPARATION OF HYDROXY AROMATIC CARBOXYLIC ACIDS AND ESTER DERIVATIVES THEREOF

James L. McGinnis, Middlesex, and Anthony B. Conciatori, Chatham, both of N.J., assignors to Celanese Corporation, New York, N.Y.

Filed Oct. 6, 1980, Ser. No. 194,201

Int. Cl.³ C07C *69/94*

U.S. Cl. 560—56 **27 Claims**

1. A process for preparing the ester of a hydroxy aromatic carboxylic acid which comprises reacting a hydroxy aromatic halide with carbon monoxide in the presence of (i) a reactive alcohol solvent wherein said alcohol has from 1 to about 8 carbons, and (ii) a catalytic amount of a Group VIII catalyst, under carbonylation reaction conditions sufficient to produce the corresponding hydroxy ester of said hydroxy aromatic carboxylic acid.

4,374,263

PROCESS FOR THE PRODUCTION OF ESTERS IN THE PRESENCE OF A HETEROGENEOUS ESTERIFICATION CATALYST

Ronald D. Hancock, Weybridge, and Robert Mackison, Epsom, both of England, assignors to The British Petroleum Company Limited, London, England

Filed Oct. 24, 1980, Ser. No. 200,558

Claims priority, application United Kingdom, Oct. 27, 1979, 7937331

Int. Cl.³ C07C *67/08*

U.S. Cl. 560—204 **9 Claims**

1. A process for the production of esters which process comprises reacting under esterification reaction conditions a carboxylic acid or an anhydride thereof with an alcohol or a phenol or a derivative thereof in the presence of a catalytically effective amount of an inorganic oxide selected from the group consisting of silica, alumina, titania, zirconia, glass, sepiolite and zeolitic molecular sieves and having bonded to the surface thereof by reaction with surface hydroxyl groups present thereon the group:

$$=Si-R-CH_2SO_3H \qquad (I)$$

wherein R is a divalent radical containing up to 20 carbon atoms and at least one of the unsatisfied valencies of the silicon atom is linked to the inorganic oxide, the remainder, if any, being satisfied by either halogen atoms or organic radicals containing up to 20 carbon atoms or hydrolysis products thereof.

9. A process according to claim 1, 2 or 3 wherein the alcohol is 2-ethyl hexanol, the carboxylic acid is adipic acid and the ester so produced is di-(2-ethyl hexyl) adipate.

4,374,264

PROCESS FOR THE PREPARATION OF γ-UNSATURATED CARBOXYLATES

Errol J. McGarry, Eltham North, Australia, assignor to ICI Australia Limited, Melbourne, Australia

Filed May 18, 1981, Ser. No. 265,073

Claims priority, application Australia, Jun. 2, 1980, PE3836

Int. Cl.³ C07C *69/533*

U.S. Cl. 560—205 **9 Claims**

1. A process for the preparation of a γ-unsaturated carboxylate of formula I

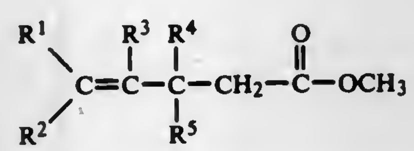

I

wherein R^1, R^2, R^3, R^4 and R^5 are independently chosen from hydrogen and C_1 to C_6 alkyl, by the reaction of an allyl alcohol of formula II

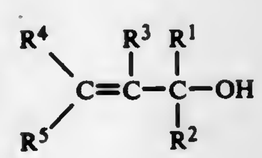

II

with trimethyl orthoacetate in the presence of an acidic catalyst which process comprises:

(a) slowly adding the allyl alcohol of formula II over a period of at least 30 minutes to a stoichiometric excess of trimethyl orthoacetate heated to a temperature at or near its boiling point;

(b) distilling portion of the excess trimethyl orthoacetate from the reaction mixture until the reaction mixture reaches a temperature in the range from 130° to 160° C.; and

(c) maintaining the temperature of the reaction mixture in the range from 130° to 160° C. to complete the reaction.

4,374,265

PREPARATION OF ETHYLIDENE DIACETATE

Thomas H. Larkins, Jr., Kingsport, Tenn., assignor to Eastman Kodak Company, Rochester, N.Y.

Filed Jul. 31, 1981, Ser. No. 288,830

Int. Cl.³ C07C *67/00, 69/16*

U.S. Cl. 560—263 **6 Claims**

1. Process for the preparation of ethylidene diacetate which comprises hydrogenating acetic anhydride at about 100° to 200° C. and about 250 to 3000 psig in the presence of a catalytic amount of a heterogeneous palladium catalyst and a silica-alumina material which contains about 5 to 40 weight percent alumina and in the substantial absence of strong protonic acid.

4,374,266

AMMONIUM SALTS OF FLUOROPHTHALAMIC ACIDS AND METHOD OF PREPARATION

Michael J. Fifolt, Grand Island, N.Y., and Arthur M. Foster, Birmingham, Mich., assignors to Occidental Chemical Corporation, Niagara Falls, N.Y.

Filed Dec. 29, 1980, Ser. No. 220,672

Int. Cl.³ C07C *101/42*

U.S. Cl. 562—456 **6 Claims**

1. Ammonium salts of fluorophthalamic acids, characterized by the formula

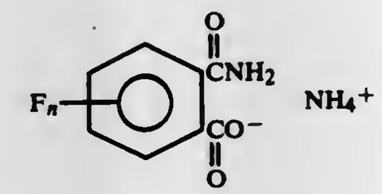

wherein n is 1 or 2.

4,374,267

FLUOROPHTHALAMIC ACIDS AND METHOD OF PREPARATION

Michael J. Fifolt, Grand Island, N.Y., and Arthur M. Foster, Birmingham, Mich., assignors to Occidental Chemical Corporation, Niagara Falls, N.Y.

Filed Dec. 29, 1980, Ser. No. 220,674

Int. Cl.³ C07C *101/42*

U.S. Cl. 562—456 **6 Claims**

1. Fluorophthalamic acids characterized by the formula

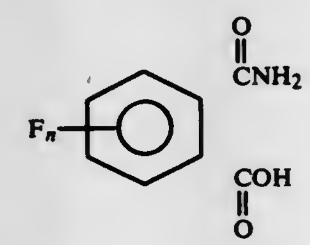

wherein n is 1 or 2.

4,374,268

CATALYTIC OXYDEHYDROGENATION PROCESS

Chelliah Daniel, and Phyllis L. Brusky, both of Columbus, Ohio, assignors to Ashland Oil, Inc., Ashland, Ky.

Filed Mar. 10, 1980, Ser. No. 129,005

Int. Cl.³ C07C *51/377, 57/05, 67/317, 69/54*

U.S. Cl. 562—599 **4 Claims**

1. In a process for the catalytic conversion of isobutyric acid or a lower alkyl ester thereof to the corresponding α,β-ethylenically unsaturated derivative via the oxydehydrogenation reaction wherein an iron phosphate catalyst is contacted with a gaseous feed stream containing said acid or ester substrate and oxygen at a temperature between about 300° and 500° C.; the improvement of effecting said oxygehydrogenation reaction in the presence of a modified iron phosphate catalyst having the gram-atom empirical formula $FeP_{1-2}M_{0.01-1}O_x$ in which M represents cobalt or lanthanum and x represents the number of oxygen atoms bound to the other elements in their respective states of oxidation in the catalyst.

4,374,269

OXYDEHYDROGENATION PROCESS FOR PREPARING METHACRYLIC ACID AND ITS LOWER ALKYL ESTERS

Ferdinand A. Ruszala, Columbus, Ohio, assignor to Ashland Oil, Inc., Ashland, Ky.

Filed Nov. 19, 1981, Ser. No. 322,497

Int. Cl.³ C07C *51/377, 57/05, 67/317, 69/54*

U.S. Cl. 562—599 **3 Claims**

1. A process for the catalytic conversion of isobutyric acid or a lower alkyl ester thereof to the corresponding α,β-olefinically unsaturated derivative by oxydehydrogenation wherein a catalyst is contacted with a gaseous feed stream containing said acid or ester and molecular oxygen at a temperature between about 300° and 500° C. which comprises using as catalyst a material having the gram-atom empirical formula $U_aNb_bO_x$ wherein a is 0.3 to 3, b is 0.7 to 2, and x is determined by satisfying the sum of the unshared positive valences of the other elements shown in the formula.

4,374,270

OXYDEHYDROGENATION PROCESS FOR PREPARING METHACRYLIC ACID AND ITS LOWER ALKYL ESTERS

Ferdinand A. Ruszala, Columbus, and Thomas J. Weeks, Jr., Arlington, both of Ohio, assignors to Ashland Oil, Inc., Ashland, Ky.

Filed Dec. 7, 1981, Ser. No. 328,289

Int. Cl.³ C07C *51/377, 57/05, 67/317, 69/54*

U.S. Cl. 562—599 **6 Claims**

1. A process for the catalytic conversion of isobutyric acid or a lower alkyl ester thereof to the corresponding α,β-olefinically unsaturated derivative by oxydehydrogenation wherein a catalyst is contacted with a gaseous feed stream containing said acid or ester and molecular oxygen at a temperature between about 300° and 500° C. which comprises using as catalyst a material having the gramatom empirical formula FeM_aO_x wherein a is a number from 0.5 to 3 and M is at least two members selected from the group consisting of antimony, niobium, tantalum and tungsten and x represents a number determined by the valence requirements of the other elements present.

4,374,271

NITROPHENYLHYDRAZINE COMPOUNDS

Don L. Hunter, Anaheim; William G. Woods, Fullerton; James D. Stone, Whittier, all of Calif., and Cecil W. LeFevre, Franklin, Id., assignors to United States Borax & Chemical Corporation, Los Angeles, Calif.

Division of Ser. No. 529,655, Dec. 4, 1974, abandoned. This application Apr. 4, 1979, Ser. No. 26,986

Int. Cl.³ C07C *109/04*

U.S. Cl. 564—310 **9 Claims**

1. A compound of the formula

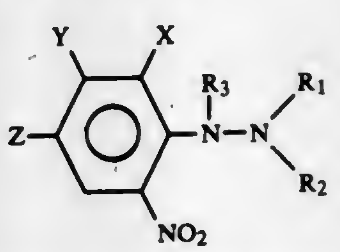

wherein X is selected from hydrogen and nitro, Y is halo, Z is selected from halo and trifluoromethyl, R_1 is lower alkyl, and R_2 and R_3 are each selected from hydrogen and lower alkyl.

4,374,272

PROCESS FOR PREPARING 2-(4'-HYDROXYARYL)-2-(4'-AMINOARYL)-PROPANES

Teruo Yuasa; Noboru Yamazaki, both of Nagoya, and Yoshio Morimoto, Tokai, all of Japan, assignors to Mitsui Toatsu Chemicals, Inc., Tokyo, Japan

Filed Nov. 7, 1979, Ser. No. 92,175

Claims priority, application Japan, Nov. 8, 1978, 53-137528

Int. Cl.³ C07C *87/64*

U.S. Cl. 564—315 **10 Claims**

1. A process for preparing 2-(4'-hydroxyaryl)-2-(4'-aminoaryl)-propanes comprising reacting

(A) at least one isopropenyl phenol compound selected from

the group consisting of isopropenyl phenol derivatives of the formula:

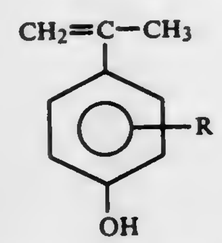

wherein R represents a hydrogen or halogen atom or an alkyl, aryl, nitro, nitrile, acyl, acyloxy or amino group, and di- to eicosa-mers of said isopropenyl phenol derivatives with

(B) an aromatic amine selected from the group consisting of aniline, o-chloroaniline, 2,5-dichloroaniline, o-nitroaniline, o-toluidine, 2,6-xylidine, o-isopropylaniline, N-methylaniline, o-aminophenol, and diphenylamine, in the presence of 0.00001 to 0.008 mole, per mole of said isopropenylphenol compound (A) calculated as a monomer, of an acid catalyst, wherein the amount of the aromatic amine (B) is 1.0 to 2.0 moles per mole of the isopropenyl phenol compound (A) calculated as a monomer.

4,374,273

METHOD FOR PRODUCTION OF METHYLAMINES

George E. Heinsohn, Cecil County, Md., assignor to E. I. Du Pont de Nemours and Company, Wilmington, Del.

Filed Apr. 28, 1981, Ser. No. 258,387

Int. Cl.^{3} C07C *85/02, 85/06;* **B01J** *29/06*

U.S. Cl. 564—479 **3 Claims**

1. In the catalytic preparation of methylamines from methanol and ammonia using an aluminosilicate catalyst, a method for controlling the relative yields of monomethyl-, dimethyl- and trimethylamine, which method comprises using a catalyst comprising an amorphous aluminosilicate containing about 0.1–6%, by weight, of sodium, potassium, lithium, barium or strontium atoms as a result of treating an amorphous aluminosilicate with a corresponding metal hydroxide, the greater the added metal content of the catalyst, the greater the amount of monomethylamine produced.

4,374,274

PREPARATION OF α-METHYLSUBSTITUTED CARBONYL COMPOUNDS

Gerd Heilen, Speyer; Klaus Halbritter, Mannheim, and Walter Gramlich, Edingen, all of Fed. Rep. of Germany, assignors to BASF Aktiengesellschaft, Ludwigshafen, Fed. Rep. of Germany

Filed Sep. 11, 1980, Ser. No. 186,130

Int. Cl.^{3} C07C *45/45*

U.S. Cl. 568—313 **9 Claims**

1. A process for the preparation of a carbonyl compound of the general formula I

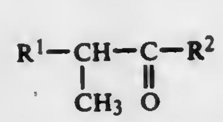

(I)

where R^1 and R^2 are straight-chain or branched alkyl of 1 to 8 carbon atoms or are aryl or aralkyl, R^1 may also be H and R^1 and R^2 together with the carbon atoms between them may also be members of an alicyclic ring, wherein a ketone of the general formula II

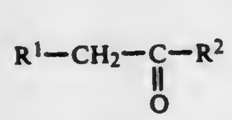

(II)

is reacted with formaldehyde at 50°–230° C. in the presence of hydrogen and of a catalyst in which the active constituents are

(a) a phosphate of one or more of the metals zirconium, titanium, hafnium and tin or a mixture of such phosphates and

(b) metallic palladium deposited on this phosphate (or phosphate mixture).

4,374,275

KETOENAMINE PYRETHROID INTERMEDIATES

Steven A. Roman, Oakdale, Calif., assignor to Shell Oil Company, Houston, Tex.

Division of Ser. No. 259,725, May 1, 1981, Pat. No. 4,324,915. This application Oct. 28, 1981, Ser. No. 315,834

Int. Cl.^{3} C07C *45/40*

U.S. Cl. 568—351 **4 Claims**

1. A process for the preparation of 2,2-dimethyl-3-(2-oxopropyl)cyclopropanecarbaldehyde which comprises treating 2,2-dimethyl-3-(2-oxopropyl)cyclopropylacetaldehyde with a trialkylsilyldialkylamine, $(R^3)_3SiNR^1R^2$, in which R^1 and R^2 each independently is an alkyl group containing from 1 to 4 carbon atoms and each R^3 is independently an alkyl group containing from 1 to 4 carbon atoms followed by ozonolysis of the resulting compound of the formula I

I

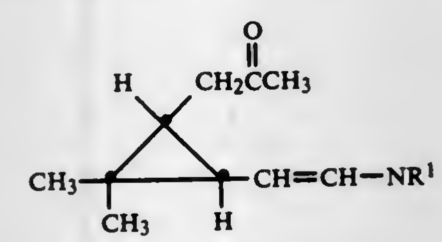

to the desired 2,2-dimethyl-3-(2-oxopropyl)cyclopropanecarbaldehyde.

4,374,276

NOVEL BRANCHED CHAIN KETONES AND THE PROCESS FOR PREPARING SAME

Richard M. Boden, Monmouth Beach, and Theodore J. Tyszkiewicz, Sayreville, both of N.J., assignors to International Flavors & Fragrances Inc., New York, N.Y.

Filed Aug. 27, 1981, Ser. No. 296,868

The portion of the term of this patent subsequent to Mar. 23, 1999, has been disclaimed.

Int. Cl.^{3} A61K *7/46;* **C07C** *2/52*

U.S. Cl. 568—398 **6 Claims**

1. A product prepared by the process of (a) trimerizing isobutylene to form triisobutylene, a mixture of substances defined according to the structures:

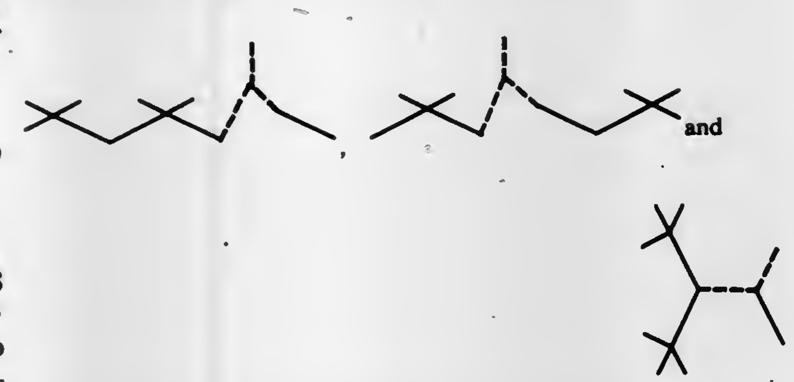

wherein in each of the molecules one of the dashed lines is a carbon-carbon double bond and the other of the dashed lines is a carbon-carbon single bond and (b) reacting the resulting triisobutylene composition of matter with an alkanoic acid anhydride having the structure:

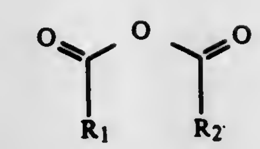

wherein R_1 and R_2 are the same or different and are each selected from the group consisting of methyl and ethyl, in the presence of a Lewis acid catalyst thereby producing a mixture of compounds comprising the compounds defined according to the structures:

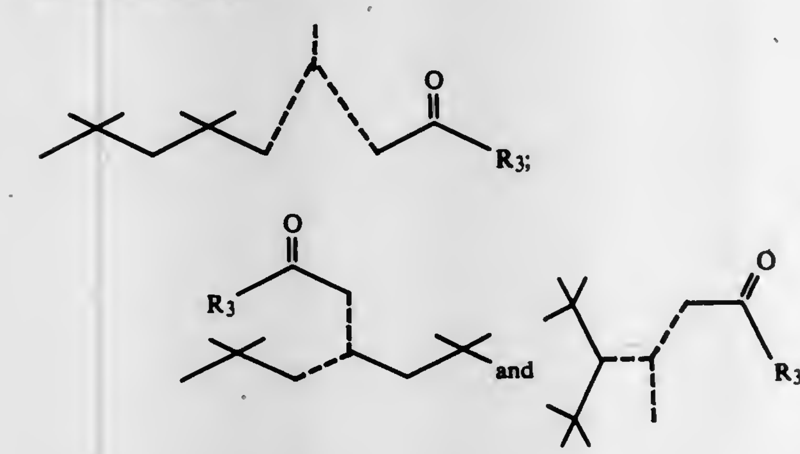

wherein R_3 represents methyl or ethyl and in each of the molecules one of the dashed lines represents a carbon-carbon double bond and each of the other of the dashed lines represent a carbon-carbon single bond.

4,374,277

ALIPHATIC C_{11} BRANCHED CHAIN ALDEHYDES AND ALCOHOLS, PROCESS FOR PREPARING SAME AND USES THEREOF IN AUGMENTING OR ENHANCING THE AROMA OF PERFUMES, COLOGNES AND/OR PERFUMED ARTICLES

Richard M. Boden, Monmouth Beach, and John H. Geiger, Jr., Lakewood, both of N.J., assignors to International Flavors & Fragrances Inc., New York, N.Y.

Division of Ser. No. 233,861, Feb. 12, 1981, Pat. No. 4,304,689. This application Sep. 25, 1981, Ser. No. 305,533

Int. Cl.^{3} C07C *47/02, 45/50*

U.S. Cl. 568—448 **5 Claims**

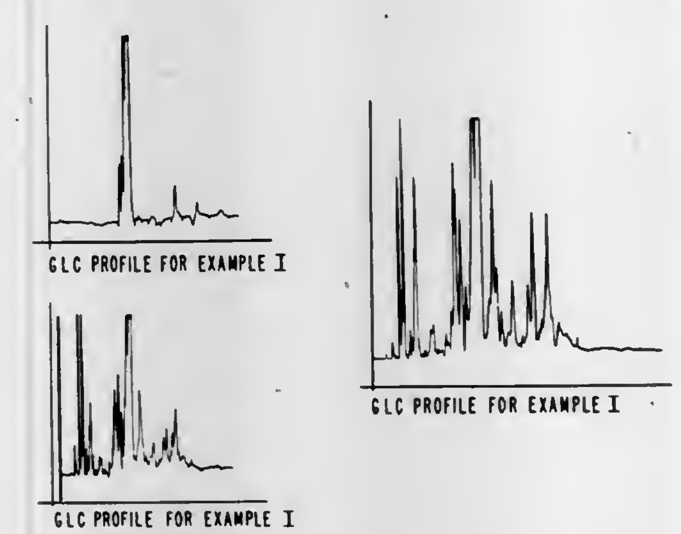

1. A compound defined according to the structure:

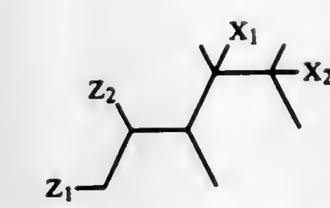

wherein one of X_1 or X_2 is hydrogen and the other of X_1 or X_2 is methyl; and wherein one of Z_1 or Z_2 is hydrogen and the other of Z_1 or Z_2 is hydroxymethyl having the structure:

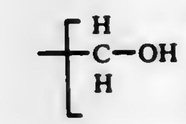

or carboxaldehyde having the structure:

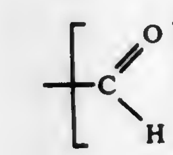

4,374,278

HYDROFORMYLATION CATALYST REACTIVATION

David R. Bryant, and Richard A. Galley, both of South Charleston, W. Va., assignors to Union Carbide Corporation, Danbury, Conn.

Division of Ser. No. 120,101, Feb. 28, 1980, Pat. No. 4,297,239, which is a continuation-in-part of Ser. No. 58,123, Jul. 16, 1979, abandoned. This application Jul. 15, 1981, Ser. No. 283,637

Int. Cl.^{3} C07C *45/50*

U.S. Cl. 568—454 **29 Claims**

1. In a hydroformulation process for producing aldehydes by hydroformylating an olefin containing from 2 to 20 carbon atoms with hydrogen and carbon monoxide in the presence of a hydroformylation reaction medium comprising a soluble rhodium complex catalyst and at least 10 moles of free triarylphosphine per mole of catalytically active rhodium present in said medium, the improvement which comprises employing as a source of rhodium for said catalyst, a rhodium complex concentrate having been produced by a process which comprises concentrating a spent hydroformylation reaction medium that contains a partially deactivated rhodium complex catalyst, free triarylphosphine, aldehyde products and higher boiling aldehyde condensation by-products, into at least two separate material streams so as to remove free triarylphosphine, aldehyde products and higher boiling aldehyde condensation by-products from said spent hydroformylation reaction medium by means of distillation at temperatures of about 20° C. to about 350° C. and at pressures of about 1000 mm Hg. to about 1×10^{-6} mm Hg., wherein one stream is said rhodium complex concentrate distillation residue containing a major amount of the rhodium of said catalyst and which has been concentrated to about 0.1 to about 30 percent by weight of said spent hydroformylation reaction medium, and the other material stream or streams consist essentially of one or more of the distilled volatile components of said spent hydroformylation reaction medium.

4,374,279

PROCESS FOR THE PREPARATION OF DICUMYL PEROXIDE

Giuseppe Messina, Alghero; Mario D. Moretti, Sassari, and Loreno Lorenzoni, Porto Torres, all of Italy, assignors to Euteco Impianti S.p.A., Milan, Italy

Filed Nov. 27, 1981, Ser. No. 325,338

Claims priority, application Italy, Dec. 2, 1980, 26346 A/80

Int. Cl.[3] C07C ***179/06***

U.S. Cl. 568—558 **7 Claims**

1. A process for the preparation of dicumyl peroxide which comprises:
(a) reacting cumene hydroperoxide with a molar excess of methyl cumyl ether in the presence of from 0.05% to 5% by wt. with respect to the weight of cumene hydroperoxide of a catalyst consisting of boron trifluoride or boron trifluoride etherates,
(b) maintaining the temperature in the reaction medium from about 100° C., and
(c) removing the methanol which forms during the reaction from the reaction mixture, while the reaction proceeds.

4,374,280

PROCESS FOR THE PREPARATION OF DICUMYL PEROXIDE

Giuseppe Messina, Alghero; Mario D. Moretti, Sassari, and Loreno Lorenzoni, Porto Torres, all of Italy, assignors to Euteco Impianti S.p.A., Milan, Italy

Filed Nov. 23, 1981, Ser. No. 324,144

Claims priority, application Italy, Feb. 12, 1980, 26345 A/80

Int. Cl.[3] C07C ***179/06***

U.S. Cl. 568—558 **7 Claims**

1. A process for the preparation of dicumyl peroxide which comprises
(a) reacting cumene hydroperoxide with a molar excess of dimethyl phenyl carbinol in the presence of from 0.5% to 2% by wt. with respect to the weight of cumene hydroperoxide of a catalyst consisting of phosphorous halides or oxyhalides,
(b) maintaining the temperature in the reaction medium from about 20° to about 100° C., and
(c) removing the water which forms from the reaction mixture while the reaction proceeds.

4,374,281

PROCESS FOR THE MANUFACTURE OF HYDROQUINONE-MONOPHENYL ETHERS

Reinhart Geuss, Frankfurt am Main, Fed. Rep. of Germany, assignor to Hoechst Aktiengesellschaft, Frankfurt am Main, Fed. Rep. of Germany

Filed May 8, 1981, Ser. No. 261,794

Claims priority, application Fed. Rep. of Germany, May 10, 1980, 3018004

Int. Cl.[3] C07C ***41/16***

U.S. Cl. 568—637 **2 Claims**

1. In a process for the manufacture of hydroquinone-monophenyl ethers of their alkali metal salts of the formula

I

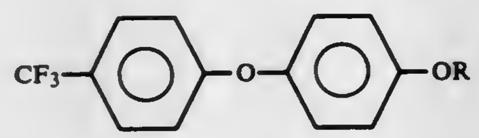

in which R is hydrogen or an alkali metal cation by reacting halogen compounds of the formula

II

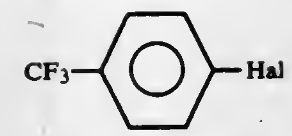

in which Hal is chlorine or bromine, with a hydroquinone derivative of the formula

V

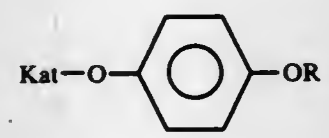

in which Kat is sodium or potassium, in N-methyl pyrrolidone, the improvement which comprises carrying out the reaction at a temperature of from 230° to 260° C. and with an at least 15% excess of hydroquinone derivative.

4,374,282

ETHERS OF POLYOLS, THEIR PREPARATION AND USE

Paul Maldonado, St. Symphorien D'Ozon; Robert Nouguier, Plan de Cuques; Jean-Claude Fayard, Lyons, and Robert Leger, Grigny, all of France, assignors to Elf France, Paris, France

Filed Oct. 15, 1980, Ser. No. 197,205

Claims priority, application France, Oct. 15, 1979, 79 25559

Int. Cl.[3] C07C ***41/01***

U.S. Cl. 568—672 **9 Claims**

1. A process for preparing ethers of polyols of the formula

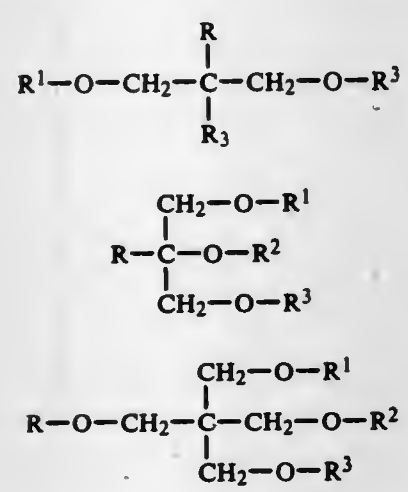

wherein
R, R^1, R^2 and R^3 are independently selected from alkyl radicals having from 1 to 22 carbon atoms, which comprises reacting a solution of an alkyl halide of the formula:

R^5X

wherein
R^5 can be R, R^1, R^2 or R^3 and X is chloride or bromine and a nonreactive water immiscible organic solvent with a mixture of a polyol of the formula

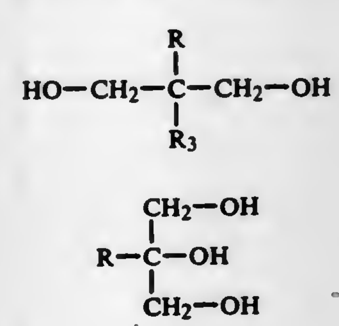

-continued

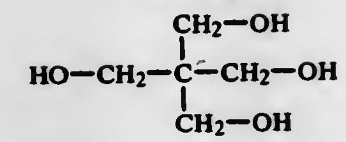

wherein
R and R_3 are as defined above and an alkaline aqueous medium in the presence of an effective amount of a phase transfer agent.

4,374,283

PURIFICATION OF AQUEOUS EFFLUENT STREAMS CONTAINING BPA AND PHENOL

Viney P. Aneja, Schenectady, N.Y., assignor to General Electric Company, Schenectady, N.Y.

Filed Jun. 25, 1981, Ser. No. 277,421

Int. Cl.[3] C07C ***37/72***

U.S. Cl. 568—724 **8 Claims**

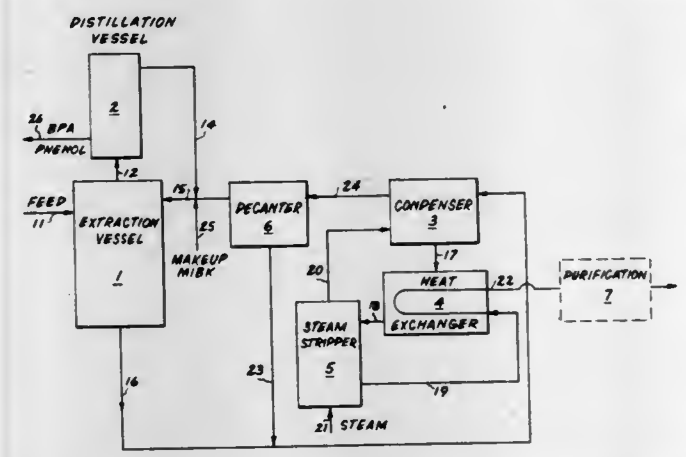

1. A continuous process for purifying aqueous streams containing BPA and phenol comprising: introducing said aqueous effluent stream to an extraction vessel along with clean MIBK, removing from the top of said extraction vessel an MIBK solution of BPA and phenol, separating the BPA and phenol from the MIBK solution of BPA and phenol and recycling the MIBK to said extraction vessel, removing the heavy aqueous phase from said extraction vessel and passing said aqueous phase to MIBK removal means where MIBK is separated and returned to said extraction vessel, and recovering from said MIBK removal means an aqueous phase which is substantially free of BPA, phenol, and MIBK.

4,374,284

ANTIULCER, ANTIINFLAMMATORY, AND ANTIALLERGIC AGENT COMPRISING AS THE MAIN INGREDIENT OLEAN-12-ENE-3β, 30-DIOL WHICH IS DEVOID OF SIDE EFFECTS OF GLYCYRRHETINIC ACID AND A NEW PROCESS FOR PREPARATION OF OLEAN-12-ENE-3β, 30-DIOL

Shoji Shibata, Tokyo; Akira Kumagai, Chiba; Masatoshi Harada, Tokyo; Singo Yano, Chiba; Hiroshi Saito, Tokyo, and Kunio Takahashi, Urawa, all of Japan, assignors to Minophagen Pharmaceutical Company, Japan

Filed Mar. 27, 1981, Ser. No. 248,222

Claims priority, application Japan, Apr. 1, 1980, 55-041196; Oct. 24, 1980, 55-148412

Int. Cl.[3] C07C ***35/22***

U.S. Cl. 568—817 **17 Claims**

1. A pharmaceutical composition useful for the treatment of ulcer comprising as an active ingredient olean-12-ene-3β, 30-diol of the formula:

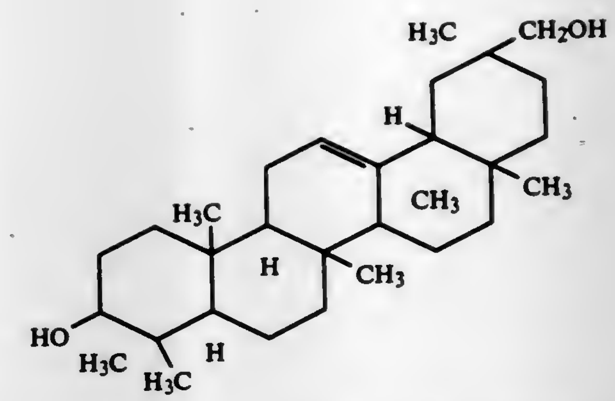

in an amount effective to display antiulcer activity in combination with a pharmaceutically acceptable carrier.

4,374,285

SYNTHESIS OF ETHANOL BY HOMOLOGATION OF METHANOL

Jiang-Jen Lin, and John F. Knifton, both of Austin, Tex., assignors to Texaco Inc., White Plains, N.Y.

Filed Jan. 8, 1981, Ser. No. 223,514

Int. Cl.[3] C07C ***27/00***

U.S. Cl. 568—902 **22 Claims**

1. A process for preparing ethanol which comprises contacting a mixture of carbon monoxide, hydrogen and methanol with a catalyst system comprising a ruthenium compound, a quaternary phosphonium or ammonium base or salt and a cobalt compound selected from the group consisting of cobalt-(II) iodide, cobalt(II) bromide and cobalt(II) chloride at a pressure of 500 psi or greater and at a temperature of at least 150° C.

4,374,286

HYDRATION OF OLEFINS

Robert J. Schmidt, Rolling Meadows, Ill., assignor to UOP Inc., Des Plaines, Ill.

Filed Feb. 26, 1982, Ser. No. 352,839

Int. Cl.[3] C07C ***29/10, 29/04, 27/02***

U.S. Cl. 568—907 **19 Claims**

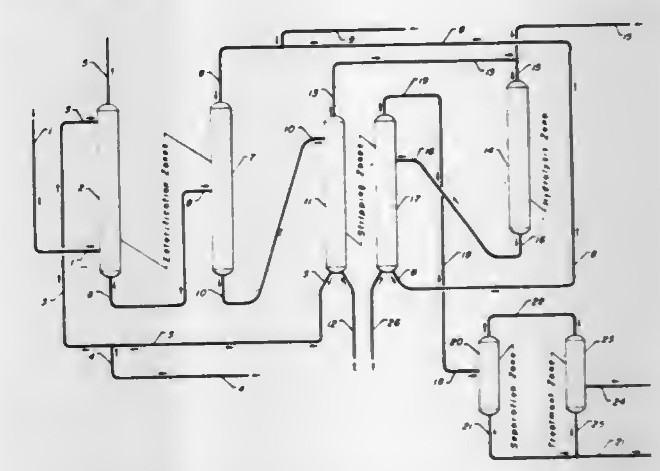

1. A process for the hydration of an olefinic hydrocarbon which comprises esterifying said olefinic hydrocarbon with an inorganic acid at esterification conditions in a first esterification zone, subjecting the resultant alkyl salts to trans-esterification by treatment with an organic acid at esterification conditions in a second esterification zone, stripping the resultant organic ester from the reconstituted inorganic acid, hydrolyzing said organic ester with water at hydration conditions in a hydration zone, stripping the resultant alcohol and ether hydrolysis product from the reconstituted organic acid, separating and recovering said alcohol from said ether at separation conditions in a separation zone, treating said ether at treatment conditions in a treatment zone to produce an additional amount of said alcohol, and recovering said alcohol.

4,374,287
SYNTHESIS OF ALCOHOLS

Tamotsu Imai, Mt. Prospect, and Edwin H. Homeier, Maywood, both of Ill., assignors to UOP Inc., Des Plaines, Ill.
Continuation of Ser. No. 163,762, Jun. 27, 1980, abandoned. This application Feb. 24, 1981, Ser. No. 237,561
Int. Cl.^{3} C07C *27/22*
U.S. Cl. 568—909 13 Claims

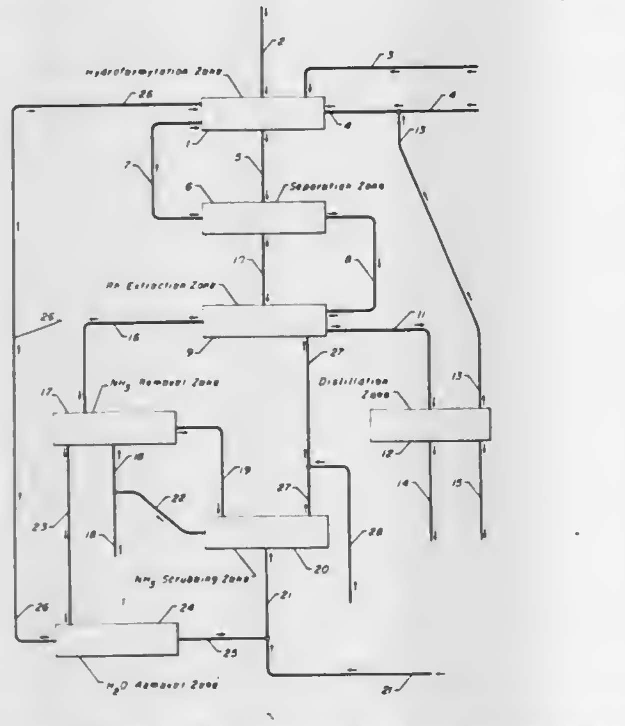

1. A catalytic process for the synthesis of an alcohol from an olefinic hydrocarbon wherein a substantial quantity of catalyst is recovered which comprises:
(a) treating said olefinic hydrocarbon having at least 3 carbon atoms with carbon monoxide and hydrogen in a hydroformylation reaction zone at hydroformylation reaction conditions in the presence of a rhodium complex catalyst and a tertiary amine modifier to produce said alcohol in a homogeneous admixture with unreacted carbon monoxide, hydrogen, said rhodium catalyst and said tertiary amine modifier;
(b) separating said unreacted carbon monoxide and hydrogen in a first separation zone from said homogeneous alcohol product admixture;
(c) recycling at least a portion of said unreacted carbon monoxide and hydrogen to said hydroformylation reaction zone;
(d) treating said remaining homogeneous admixture comprising said alcohol, said rhodium catalyst and said tertiary amine modifier in a catalyst extraction zone with an aqueous ammonium hydroxide solution at treatment conditions to produce;
(i) an organic phase comprising said alcohol and said tertiary amine modifier, and
(ii) an aqueous ammonium hydroxide solution phase comprising said rhodium catalyst, water and ammonia;
(e) separating said organic phase in a second separation zone to produce an alcohol product stream and a tertiary amine modifier stream;
(f) recovering said alcohol product from said alcohol product stream;
(g) recovering said modifier from said modifier stream and recycling at least a portion of said modifier to said hydroformylation reaction zone;
(h) stripping ammonia from said aqueous ammonium hydroxide solution phase containing said rhodium complex catalyst by contact of said phase with an ammonia stripping agent consisting essentially of carbon monoxide at a temperature ranging from about ambient up to about 150° C. and a pressure ranging from about 0.1 to about 5 atmospheres to produce an aqueous stripping phase containing water, said rhodium complex catalyst and less than about 0.5 wt % ammonia;
(i) distilling off a portion of said water from said aqueous stripping phase at water distillation conditions to produce a stream consisting essentially of rhodium catalyst and water; and
(j) recycling at least a portion of said stream consisting essentially of rhodium catalyst and water to said hydroformylation reaction zone.

4,374,288
ELECTROMAGNETIC PROCESS AND APPARATUS FOR MAKING METHANOL

Robert L. Scragg, 4210 Prices Creek Rd., Huntington, W. Va. 25701
Filed Dec. 17, 1980, Ser. No. 217,501
Int. Cl.^{3} B01J *19/12;* **C07C** *27/14, 29/48*
U.S. Cl. 568—910 11 Claims

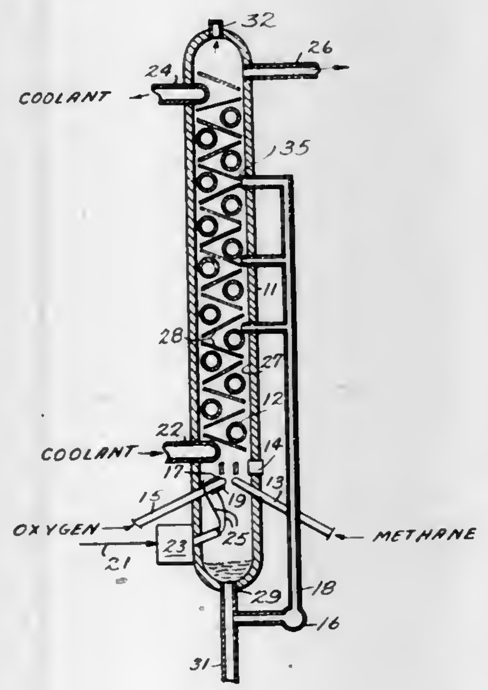

8. A method of forming methanol comprising the steps of:
continuously supplying methane gas at a low velocity to an enclosed reactor chamber;
generating an electromagnetic field within said reactor chamber, said electromagnetic field being sufficient to atomize oxygen but insufficient to cause arcing through said oxygen; and
continuously supplying oxygen at a low velocity to said chamber, said oxygen being atomized by said electromagnetic field, said atomized oxygen combining with said methane gas to form methanol.

4,374,289
PRODUCTION OF MONOFLUOROTRICHLOROETHANE

Michael Van Der Puy, and Ronald F. Piskorz, both of Cheektowaga, N.Y., assignors to Allied Corporation, Morris Township, Morris County, N.J.
Division of Ser. No. 192,770, Oct., 1980, abandoned. This application Oct. 22, 1981, Ser. No. 313,535
Int. Cl.^{3} C07C *17/00*
U.S. Cl. 570—168 4 Claims

1. A method for the production of 1-fluoro-1,1,2-trichloroethane which comprises reacting trichloroethylene with hydrogen fluoride using about 1.5 to 3.5 moles of hydrogen fluoride per mole of trichloroethylene, and conducting the reaction in the presence of tungsten hexafluoride at a temperature range of about 50° to 150° C. for a residence time of about one-fourth hour to five hours.

4,374,290
PROCESS FOR PREPARING VITAMIN K

Karl H. Dötz, Vaterstetten, Fed. Rep. of Germany, assignor to Hoffmann-La Roche Inc., Nutley, N.J.
Division of Ser. No. 127,002, Mar. 4, 1980, Pat. No. 4,320,065. This application Nov. 9, 1981, Ser. No. 319,481
Int. Cl.^{3} C07C *9/00*
U.S. Cl. 585—16 2 Claims

1. A compound of the formula:

$$CH_3—C\equiv C—R^3$$

wherein R^3 is geranyl, farnesyl, phytyl or

$$—CH_2CH=\overset{CH_3}{\overset{|}{C}}—\left[CH_2—CH_2—CH=\overset{CH_3}{\overset{|}{C}}\right]_m—CH_3;$$

and m is an integer of from 3 to 13.

4,374,291
SYNTHESIS OF BIS(ETHYNYLPHENYL) COMPOUNDS

Kreisler S. Y. Lau, Alhambra, Calif., assignor to Hughes Aircraft Company, Culver City, Calif.
Filed Nov. 6, 1981, Ser. No. 318,716
Int. Cl.^{3} C07C *15/16*
U.S. Cl. 585—320 11 Claims

6. A process for preparing 4,4′-diethynyldiphenylmethane in high yield comprising the steps of:
forming a slurry of 4,4′-diaminodiphenylmethane in concentrated sulfuric acid, adding $NaNO_2$ to said slurry and mixing said slurry with an aqueous solution of an inorganic halide to form a dihalogenated diphenylmethane;
coupling said dihalogenated diphenylmethane with ethynyltrimethylsilane by warming and stirring a mixture of said methane and said silane in the presence of an organopalladium catalytic complex, a ligand and deareated triethylamine and toluene to provide an end-protected diphenylmethane compound having acetylenic moieties as substituents; and
subsequently treating said end-protected compound with a weak base in an alcohol-ether solvent to remove said end-protecting groups, thereby yielding 4,4′-diethynyldiphenylmethane.

4,374,292
PROCESS FOR PREPARING α-THUJENE

Haruhiko Toda, Odawara; Moriaki Higo, Kanagawa; Hitoshi Saga, Hadano, and Masafu Shinbo, Odawara, all of Japan, assignors to Lion Corporation, Tokyo, Japan
Filed Feb. 3, 1982, Ser. No. 345,430
Claims priority, application Japan, Feb. 3, 1981, 56-14762
Int. Cl.^{3} C07C *2/76*
U.S. Cl. 585—360 2 Claims

1. A process for preparing α-thujene by isomerizing sabinene with an alkali metal and a primary or secondary amine, the improvement comprising using 0.2 to 0.5 moles of the alkali metal and 0.3 to 0.8 moles of the primary or secondary amine per mole of the sabinene.

4,374,293
INDENE PRODUCTION FROM AROMATIC OLEFINS

J. D. Burrington, Richmond Heights; R. K. Grasselli, Chagrin Falls, and C. T. Kartisek, Sagamore Hills, all of Ohio, assignors to The Standard Oil Co., Cleveland, Ohio
Filed Aug. 14, 1981, Ser. No. 293,030
Int. Cl.^{3} C07C *12/64*
U.S. Cl. 585—410 15 Claims

1. A process for making indene or substituted indene comprising contacting a reactant of the formula

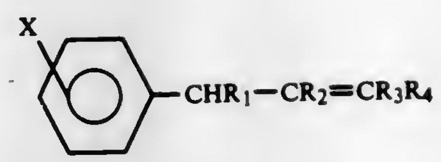

wherein X is F, Br, I, Cl, H, C_{1-14} alkyl, or C_{6-14} aryl and/or OR_5 wherein R_5 is H or C_{1-4} alkyl, and wherein each of R_1, R_2, R_3 and R_4 are independently F, Cl, Br, I, OR_6, CO_2R_6, CHO, CN or NO_2 wherein R_6 is H, C_{1-14} alkyl or C_{6-14} aryl and molecular oxygen with a catalyst comprising an oxide of tungsten or an oxide complex of tungsten containing at least 30 atom % tungsten based on the metal atoms in said complex excluding oxygen.

4,374,294
ZEOLITE CATALYSTS MODIFIED WITH GROUP IIIA METAL

Chin-Chiun Chu, North Brunswick, N.J., assignor to Mobil Oil Corporation, New York, N.Y.
Continuation-in-part of Ser. No. 212,067, Dec. 2, 1980, Pat. No. 4,302,662. This application Sep. 17, 1981, Ser. No. 303,287
Claims priority, application France, Feb. 19, 1981, 81 300683
The portion of the term of this patent subsequent to Nov. 24, 1998, has been disclaimed.
Int. Cl.^{3} C07C *2/68, 5/22, 5/52*
U.S. Cl. 585—466 14 Claims

1. A process for conversion of organic compounds, said process comprising contacting said organic compounds with a crystalline zeolite catalyst composition at a temperature of between about 250° C. and about 750° C. and a pressure within the approximate range of $10^5 N/m^2$ to $10^7 N/m^2$, said catalyst comprising a zeolite characterized by a silica to alumina mole ratio of at least 12 and a constraint index within the approximate range of 1 to 12, said catalyst further having incorporated thereon from about 1 to 45 percent by weight of a mixture of Rare Earth elements, said Rare Earth elements being present in said catalyst in the form of their oxides.
6. The process of claim **1**, **3** or **5** wherein said conversion comprises the alkylation of an aromatic compound by contacting said compound with an alkylating agent to produce dialkylbenzene compounds wherein the 1,4-dialkylbenzene isomer is present in excess of its normal equilibrium concentration.
9. The process of claim **1**, **3** or **5** wherein said conversion comprises the transalkylation of aromatic compounds to produce dialkylbenzene compounds wherein the 1,4-dialkylbenzene isomer is present in excess of its normal equilibrium concentration.

4,374,295
CATALYTIC CONVERSION OF METHANOL TO LIGHT OLEFINS

Carol S. Lee, Princeton, N.J., assignor to Mobil Oil Corporation, New York, N.Y.
Filed Apr. 15, 1982, Ser. No. 368,496
Int. Cl.^{3} C07C *1/20, 1/253*
U.S. Cl. 585—640 8 Claims

1. In a process for producing a hydrocarbon mixture containing light olefins by contacting a methanol feed with a catalyst comprising a crystalline aluminosilicate zeolite having a Constraint Index of about 1 to 12 and a silica to alumina molar ratio of at least about 12, said contacting occurring in a reaction zone under methanol conversion reaction conditions, the improvement which comprises:
co-feeding to said reaction zone along with said methanol feed an aldehyde-containing diluent comprising formaldehyde, acetaldehyde or a mixture thereof, in an amount sufficient to increase the selectivity of the conversion reaction for production of C_2 to C_4 olefins.

4,374,296
ISOMERIZATION OF PARAFFIN HYDROCARBONS USING ZEOLITES WITH HIGH STEAM-ENHANCED ACIDITY
Werner O. Haag, Lawrenceville, N.J., and Rudolph M. Lago, Yardley, Pa., assignors to Mobil Oil Corporation, New York, N.Y.
Continuation-in-part of Ser. No. 121,339, Feb. 14, 1980, Pat. No. 4,326,994. This application Mar. 31, 1981, Ser. No. 249,564
Int. Cl.³ C07C *5/13*
U.S. Cl. 585—739 **23 Claims**

1. A process for effecting hydroisomerization of a C_4–C_8 paraffin which comprises contacting a feedstock containing the paraffin under hydroisomerization conditions with a catalyst comprising a porous crystalline zeolite characterized by silica/alumina mole ratio of greater than 12 and a constraint index within the approximate range of 1 to 12, which zeolite contains a minor proportion of a Group VIII metal and which zeolite has an enhanced acid activity achieved by a method comprising treating the zeolite with water under conditions of contact time, temperature and water partial pressure governed by the following relationship of treating time and water pressure at constant temperature:

$$0.01(Pt)_T < (Pt) < 10(Pt)_T$$

where

$(Pt)_T = 2.6\times10^{-9}e^{16000/T}$;
P = Water Partial Pressure, atmospheres;
t = Treating Time, hours;
T = Temperature, degrees K.

4,374,297
SELECTIVE OXIDATION OF ETHYL TOLUENE OR METHYL STYRENE ISOMER MIXTURES TO ENRICH META-ISOMER CONTENT
John M. Klosek, Sewaren, and Margaret M. Wu, Belle Mead, both of N.J., assignors to Mobil Oil Corporation, New York, N.Y.
Filed Dec. 30, 1981, Ser. No. 336,102
Int. Cl.³ C07C *7/00*
U.S. Cl. 585—868 **12 Claims**

1. A process for preparing an isomer mixture of ethyl toluene or methyl styrene richer in the meta isomer than the starting mixture which comprises oxidizing a starting mixture of ethyl toluene isomers or methyl styrene isomers containing para isomer in which the meta isomer predominates in the presence of a zeolite having a Constraint Index of about 1 to 12, a silica to alumina ratio of at least about 12 which zeolite is modified with at least one transition element effective as an oxidation catalyst.

4,374,298
SEMI-FLEXIBLE GAS-INSULATED TRANSMISSION LINE USING SANDWICHED DISCS FOR INTERMITTENT FLEXING JOINTS
Prasad R. Kommineni, Westboro, Mass., assignor to Westinghouse Electric Corp., Pittsburgh, Pa.
Filed Mar. 24, 1982, Ser. No. 361,211
Int. Cl.³ H01B *9/06, 9/04;* H02G *5/06*
U.S. Cl. 174—21 C **4 Claims**

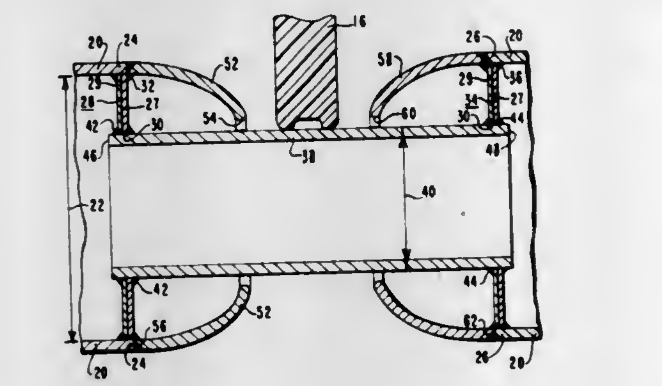

1. A gas-insulated transmission line comprising:
an elongated outer sheath;
an elongated inner conductor disposed within said outer sheath, said inner conductor comprising a pair of longitudinally spaced-apart cylindrical main conductor sections having a first diameter and facing ends, a flexing element fixedly secured to each main conductor section end and extending radially inwardly therefrom and a cylindrical conductor hub section having a second diameter less than said first diameter fixedly secured to both flexing elements adjacent the ends of said conductor hub section, each of said flexing elements comprising a pair of thin, hollow discs sandwiched together by fusing on the inside and outside diameters thereof, said conductor hub section extending through said hollow sandwiched discs;
an insulating gas electrically insulating said inner conductor from said outer sheath; and
means for insulatably supporting said inner conductor in said outer sheath.

4,374,299
TRIBOELECTRIC TRANSDUCER CABLE
John Kincaid, Batavia, Ill., assignor to Belden Corporation, Geneva, Ill.
Filed May 19, 1980, Ser. No. 150,795
Int. Cl.³ H01B *11/06*
U.S. Cl. 174—36 **9 Claims**

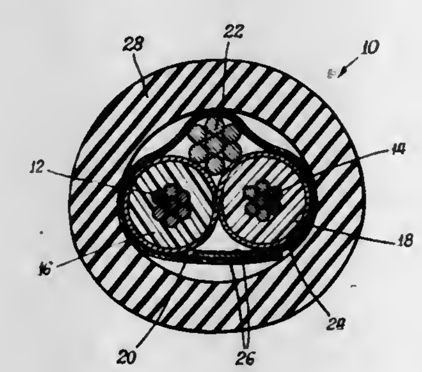

1. A triboelectric transducer cable for generating a signal in response to movement or deformation thereof, comprising
a pair of insulated central conductors,
a semi-conductive element independently wrapped in physically separate and surrounding relation to each of the insulated central conductors,
an additional drain wire conductor arranged in electrically conductive contact with the semi-conductive element, said semi-conductive element being unbonded to the insulated central conductors, a conductive shield means surrounding the drain wire conductor and the semi-conductive lazer element and being in electrical contact therewith, and
a protective jacket surrounding the insulated central conductors, semi-conductive element, drain wire conductor and shield means of the cable.

4,374,300
SOUND MIXER DEVICES
Robert Ponto, and Hardison G. Martin, both of Louisville, Ky., assignors to Innovative Electronics, Inc., Louisville, Ky.
Filed Oct. 18, 1979, Ser. No. 85,905
Int. Cl.³ H04M *1/60*
U.S. Cl. 179—1 AT **10 Claims**

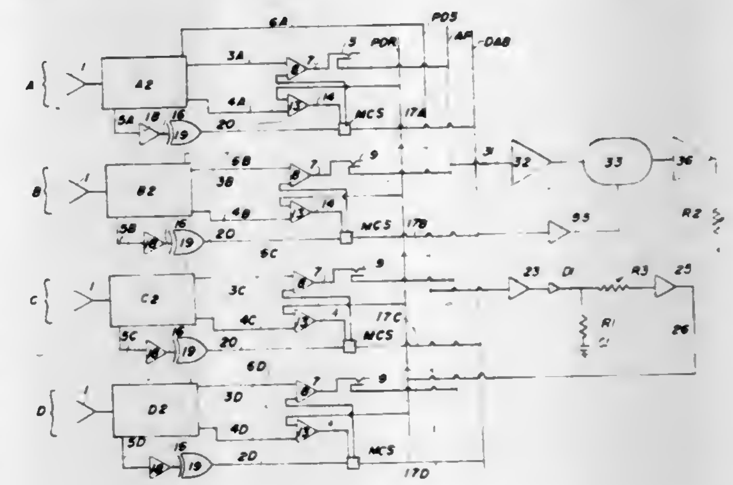

1. A multiple input signal transmission means including:
(a) at least two signal input channels, each channel including:
(i) program input signal generating means to generate an alternating current first program output signal in response to receipt of an input signal;
(ii) rectifier means to receive said alternating current first program signal and provide a direct current first program signal;
(iii) comparator means to receive said direct current first program signal and a direct current reference signal and to generate first and second actuator signals in response to selected differences between said direct current first program signal and said reference signal;
(iv) input channel master control switch means to receive said first and second actuator signals and to generate a first master control output signal in response to receipt of said first actuator signal and to generate a second master control output signal in response to receipt of said second actuator signal and transmit one of said first and second master control output signals upon receipt of a master control switch initiator signal;
(v) program switch means to receive said first program output signal and said first and second master control output signals to provide a first program output signal upon receipt of said first master control output signal and to provide a second program output signal upon receipt of said second master control output signal;
(vi) "0" crossing detector means to receive said first alternating current program output signal and to generate said master control switch initiator signal upon occurrence of "0" voltage in said first program signal and to couple said master control switch initiator signal to said master control switch to permit transmission of one of said first and second master control switch signals;
(b) collector buss means to receive said direct current first program signal from selected input channels and generate said reference signal and supply said reference signal to said comparator means of each input channel;
(c) attenuator means to receive said second program output signals and said master control output signals from at least

two of said master control switch means and, attenuate said second program signals as a function of said control output signals and transmit combined and attenuated second program output signals to output means.

4,374,301
LOCAL EXTERNAL COMMUNICATION DEVICE FOR ENCLOSED HELMET AND MASK ASSEMBLY
Leonard P. Frieder, Jr., Dalton, Pa., assignor to Gentex Corporation, Carbondale, Pa.
Filed Sep. 18, 1980, Ser. No. 188,510
Int. Cl.³ H04M *1/02*
U.S. Cl. 179—1 R **9 Claims**

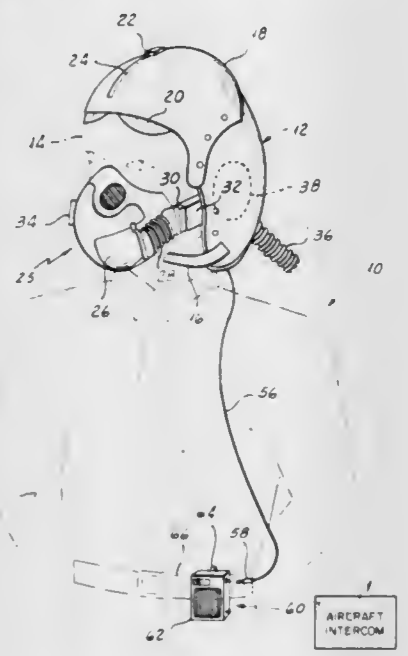

6. A local external communication device for use with an assembly which covers the ears of the wearer and which is provided with a communication system comprising an earphone and a lead provided with a first coupling element for connecting said communication system to a radio or intercom system including in combination, a housing, a microphone in said housing, a battery in said housing, a second coupling element on said housing adapted to mate with said first coupling and means including said coupling elements when engaged connecting said device microphone to said earphone and connecting said battery only to said device microphone.

4,374,302
ARRANGEMENT AND METHOD FOR GENERATING A SPEECH SIGNAL
Leonardus L. M. Vogten, and Leonardus F. Willems, both of Eindhoven, Netherlands, assignors to N.V. Philips' Gloeilampenfabrieken and Technische Hogeschool Eindhoven, both of Eindhoven, Netherlands
Filed Dec. 12, 1980, Ser. No. 216,000
Claims priority, application Netherlands, Jan. 21, 1980, 8000361
Int. Cl.³ G10L *1/00*
U.S. Cl. 179—1 SM **6 Claims**

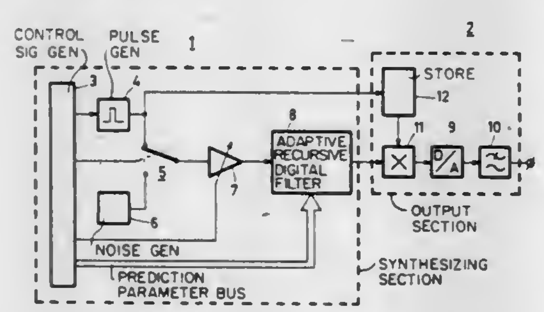

1. An arrangement for generating a speech signal comprising a synthesizing section based on the linear prediction principle of producing a discrete signal consisting of a plurality of consecutive sub-signals, each representing a voiced or unvoiced speech segment, and an output section for converting the discrete signal into the speech signal, characterized in that the output section comprises means for modulating the sub-signals of the discrete signal corresponding to voiced speech segments with a window signal, the duration of which corresponds to the duration of a sub-signal and the amplitude of which increases first gradually from substantially zero value to a constant value decreases thereafter gradually to substantially zero value, so that at the instant of transistion from one sub-signal to a next sub-signal the amplitude of the speech signal is substantially zero.

4,374,303
POWER SUPPLY CONTROL CIRCUIT FOR SUBSCRIBER CARRIER TELEPHONE SYSTEM
James A. Stewart, Redwood City, Calif., assignor to GTE Automatic Electric Laboratories, Inc., Northlake, Ill.
Filed Mar. 27, 1981, Ser. No. 248,128
Int. Cl.³ H04M *1/00*; H02J *7/02*
U.S. Cl. 179—2 BC **10 Claims**

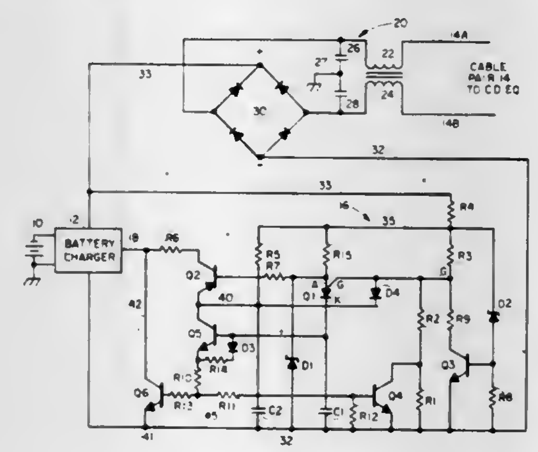

1. Apparatus responsive to prescribed voltage conditions, such as a high voltage that is greater than a first threshold level and a low voltage that is less than a second threshold level, on the pair of wires of a cable pair for rendering a carrier subscriber local battery charging circuit inoperative for at least a prescribed time interval, operation of the charging circuit connecting it through the cable pair to a central office power source from which it draws current for charging the local battery, said apparatus comprising:

first and second lines adapted for electrical connection to one and other of the cable pair wires;

a storage capacitor having one and other terminals electrically connected to said first and second lines, respectively, said storage capacitor being charged with line current on the cable pair that is drawn from the central office power source;

a timing capacitor having a first terminal electrically connected to said first line and having an other terminal;

programmable unijunction transistor (PUT) means having cathode, gate and anode electrodes, said cathode being electrically connected to the other terminal of said timing capacitor;

first means electrically connecting the other terminal of said storage capacitor to said PUT means anode;

second means responsive to both high voltage and low voltage conditions on the cable pair that exceed and fall below the first and second threshold levels for producing a voltage change on said PUT means gate that makes it sufficiently negative with respect to the voltage on said PUT means anode to cause said PUT means to conduct and discharge said storage capacitor into said timing capacitor;

third means responsive to a charge voltage on said timing capacitor for holding the charging circuit inoperative for at least the prescribed time interval during discharge of said timing capacitor following conduction of said PUT means; and

fourth means responsive to the charge voltage on said timing capacitor for lowering the PUT means gate voltage on conduction of said PUT means and raising the PUT means gate voltage immediately prior to said third means enabling the charging circuit to operate to draw line current on the cable pair for charging the local battery so as to inhibit on-off cycling of the charging circuit.

4,374,304
SPECTRUM DIVISION/MULTIPLICATION COMMUNICATION ARRANGEMENT FOR SPEECH SIGNALS
James L. Flanagan, Warren, N.J., assignor to Bell Telephone Laboratories, Incorporated, Murray Hill, N.J.
Filed Sep. 26, 1980, Ser. No. 190,993
Int. Cl.³ G10L *1/00*
U.S. Cl. 179—15.55 R **15 Claims**

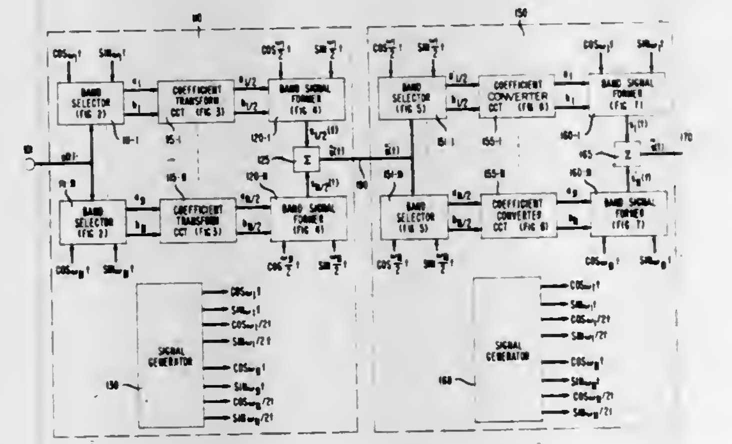

1. A speech communication system comprising a transmitter including means for receiving an input speech signal; means for partitioning the input speech signal into a plurality of subband portions; means responsive to each partitioned subband portion of the input speech signal for generating a signal representative of said subband portion; and means for applying said subband portion representative signals to a communication channel; characterized in that

said subband portion signal generating means comprises means responsive to the subband portion of the input speech signal for producing a signal of bandwidth W/k representative of the short-term spectrum of said subband portion where W is the bandwidth of said subband portion and k is an integer, said W/k bandwidth subband portion representative signal producing means comprises means for dividing the instantaneous phase component of said speech signal subband portion by a signal corresponding to the integer k wherein the amplitude component of said speech signal subband portion is unaltered; and said subband portion signal applying means comprises means for summing the W/k bandwidth subband portion representative signals to form a signal of bandwidth W_T/k representative of the short-term spectrum of said speech signal where W_T is the bandwidth of said speech signal.

4,374,305
ARRANGEMENT FOR REGENERATING START-STOP SIGNALS AND DIAL PULSES
Robert Bodart, and Jean-Pierre Werts, both of Brussels, Belgium, assignors to U.S. Philips Corporation, New York, N.Y. Continuation of Ser. No. 38,759, May 14, 1979, abandoned, which is a continuation of Ser. No. 834,241, Sep. 19, 1977, abandoned. This application Sep. 26, 1980, Ser. No. 191,098
Claims priority, application Netherlands, Nov. 8, 1976, 7612357
Int. Cl.³ H04L *25/52, 25/64*; H04Q *1/36*
U.S. Cl. 179—16 EA **4 Claims**

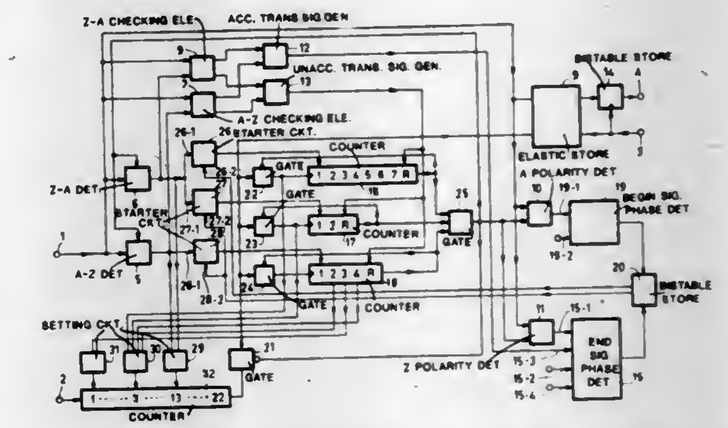

1. A method for regenerating start-stop signals and dial pulses and converting the regenerated signals into an isochronous signal, said method comprising regenerating the start-stop signals by means of a regeneration process with n sampling instants initiated by a stop-start transition, regenerating the dial pulses by a combined regeneration process comprising two mutually exclusive regeneration processes which are initiable by signal transitions in opposite directions, storing the signal samples taken at the sampling instants in an elastic storage device, and reading said storage device at isochronous timing instants for forming an isochronous information signal, characterized in that the combined regeneration process comprises regenerating said dial pulses in reduced form with two sampling instants initiated by a stop-start transition, and inversely regenerating said dial pulses with four sampling instants initiated by a start-stop transition.

4,374,306
ZERO-LOSS AUTOMATIC POLARIZATION PROTECTION DEVICE
Joachim Lohr, Berlin, Fed. Rep. of Germany, assignor to Krone GmbH, Gerlin, Fed. Rep. of Germany
Filed Nov. 18, 1980, Ser. No. 208,044
Claims priority, application Fed. Rep. of Germany, Nov. 20, 1979, 2947283
Int. Cl.³ H04M *1/00*
U.S. Cl. 179—81 R **3 Claims**

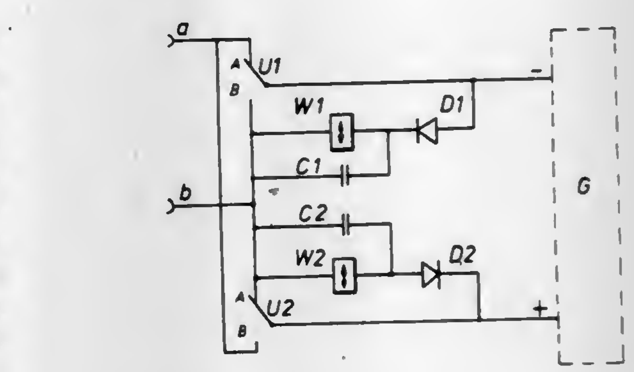

1. A zero-loss, automatic polarity safeguard device for telecommunication apparatus, said device comprising:

first and second supply rails having respective input and output terminals, said output terminals being adapted to be

connected to said telecommunication apparatus, each said supply rail having a predesignated polarity;
first and second exchange lines;
first changeover contact for selectively connecting the input terminal of said first supply rail to one of said exchange lines;
a second changeover contact for selectively connecting the input terminal of said second supply rail to one of said exchange lines;
bistable polarised electromagnetic relay means coupled to said first and second contacts for simultaneously actuating said first and second contacts to selectively connect said first exchange line to one of said input terminals and said second exchange line to the other of said input terminals, there being no voltage dropping element between said exchange lines and said output terminals of said supply rails; and
diode means connected between each of said first and second supply rails and said relay means so as to detect the relative polarity of said supply rails pursuant to an input signal on said exchange lines and to selectively actuate said relay means to match the polarity on said exchange lines to the respective predesignated polarity of said supply rails, actuation of said relay means occurring only when the polarity of the signal on said exchange lines does not match the predesignated polarity of said supply rails to which said exchange lines are respectively connected.

4,374,307
RINGER SYSTEM FOR A TELEPHONE
Peter H. Haagen, Arlington, and Christopher R. Kline, Fort Worth, both of Tex., assignors to Tandy Corporation, Fort Worth, Tex.
Filed Aug. 29, 1980, Ser. No. 182,695
Int. Cl.³ H04M *1/00*
U.S. Cl. 179—84 T **3 Claims**

1. A telephone ringer system for producing an audible sound in response to an incoming ring signal, said ringer system comprising:
detector means for detecting the receipt of an incoming ring signal to the ringer system and for producing an output signal related thereto, said detector means having a rectifying means for converting the alternating current of the ring signal to direct current, a voltage divider circuit and a capacitor, all connected in parallel; and
oscillator circuit means having a piezoelectric transducer for producing an audible ring signal and driving means connected to said detector means and to the piezoelectric transducer, said driving means having a transistor with base, collector, and emitter electrodes, means for connecting the piezoelectric transducer between the collector and emitter electrodes, means for operatively connecting the base electrode to the detector means, and a combination of a zener diode and a second capacitor connected in parallel for connecting the emitter electrode of the transistor to the most negative terminal of the rectifying means, so that said oscillator circuit means oscillates and causes the piezoelectric transducer to produce an audible ring signal in response to the output signal from the detector means having at least a predetermined voltage.

4,374,308
I-USE INDICATION IN A TELEPHONE KEYSET
John Holesha, West Palm Beach, Fla., assignor to Siemens Corporation, Iselin, N.J.
Filed Apr. 30, 1981, Ser. No. 258,882
Int. Cl.³ H04M *1/22*
U.S. Cl. 179—99 LS **13 Claims**

1. Telephone keyset apparatus comprising in combination:
(a) a plurality of dialing keys for dialing a telephone number;
(b) a plurality of line keys, each associated with a single telephone line, for selecting the associated telephone line;
(c) a plurality of first indicator lamps, each associated with one of said line keys, for indicating, when illuminated, that its associated telephone line is in use;
(d) at least one function key for selecting a function to be performed by the telephone keyset apparatus; and
(e) means responsive to the operation of said one function key for turning off all of said first indictor lamps with the exception of that one first indicator lamp associated with that telephone line to which the telephone keyset apparatus is currently connected.

4,374,309
MACHINE CONTROL DEVICE
Russell C. Walton, 106 Center Ave., Libertyville, Ill. 60048
Continuation-in-part of Ser. No. 44,651, Jun. 1, 1979, Pat. No. 4,365,122. This application Jul. 28, 1980, Ser. No. 171,881
Int. Cl.³ H01H *3/16*; F16D *9/00*
U.S. Cl. 200—61.42 **11 Claims**

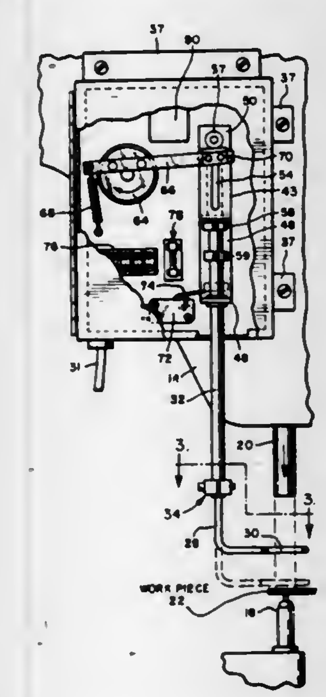

1. A machine control system for controlling the movement of a machine tool along a path comprising:
a movable support rod;
a sensor coupled to said movable support rod;
mounting means coupled to slidably retain said support rod for movement along an axis;

a limit switch coupled to said mounting means to be closed upon movement of said sensor to a preselected position;
means coupled to said support rod for closing said limit switch during movement of the rod along said axis;
means extending from said support rod;
a movable arm having one end positioned in contact with and beneath said extending means so that said extending means rests thereon;
means coupled to said mounting means and to said arm for moving said arm to allow said rod and sensor to move along said axis;
actuator switch means electrically coupled to said moving means for selectively providing power to said moving means as an incident of actuation of said actuator switch means;
relay means responsive to said actuator switch means and to closure of said limit switch for providing power to cause movement of a machine tool;
a disconnect switch means coupled to said relay means and responsive to the end of a machine stroke for terminating said power causing machine tool movement; and
control circuitry means for causing said relay means to maintain power to cause movement of the machine tool as long as said actuator switch means remains actuated regardless of the condition of said limit switch whereby continued movement of the machine tool may be effected notwithstanding movement of the sensor from said preselected position subsequent to movement thereto.

4,374,310
SWITCH ARRANGEMENT ON MOTOR VEHICLE STEERING WHEELS
Shinichi Kato, Fujisawa; Hiroshi Tsuda; Kiyoshi Yamaki, both of Yokohama; Tadashi Suzuki, Yokosuka, and Fumiyoshi Kuwano, Yokohama, all of Japan, assignors to Nissan Motor Company, Limited, Kanagawa, Japan
Filed Mar. 23, 1981, Ser. No. 246,616
Claims priority, application Japan, Mar. 25, 1980, 55-37764
Int. Cl.³ H01H *9/00*
U.S. Cl. 200—61.54 **9 Claims**

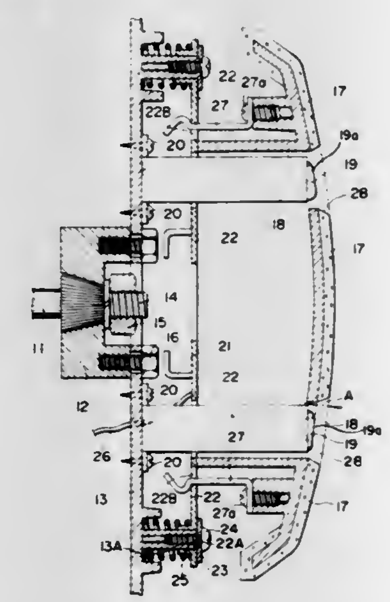

1. A steering wheel device for an automotive vehicle, comprising:
a steering shaft;
a steering wheel frame fixed to the upper end portion of the steering shaft;
a main frame being movable in relation to the steering wheel frame;
a steering wheel pad attached to the main frame, said pad operatively connected to a horn switch means for enabling the pad to actuate a vehicle horn when the front pad surface is depressed, said steering wheel pad having at least one operation hole; and
at least one operation switch for controlling an electric device other than the vehicle horn, said operation switch being attached to the steering wheel frame and located within the operation hole, wherein an outwardly facing surface of the operation switch is located in the operation hole in spaced relationship from the front surface of the steering wheel pad by a depth sufficient to prevent the switch from protruding above the steering wheel pad front surface when the steering wheel pad is pushed to actuate the horn switch.

4,374,311
ELECTRICAL MULTILAYER CONTACT
Keiji Okahashi; Masanori Motoyama, both of Hirakata, and Satoru Furukawa, Kadoma, all of Japan, assignors to Matsushita Electric Works, Ltd., Osaka, Japan
Filed Jul. 13, 1981, Ser. No. 282,711
Claims priority, application Fed. Rep. of Germany, Jul. 18, 1980, 3027304
Int. Cl.³ H01H *1/02*
U.S. Cl. 200—269 **10 Claims**

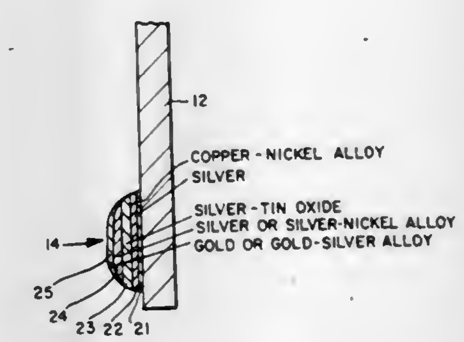

1. An electrical multilayer contact, comprising the following layers disposed upon each other on a contact support member:
a first layer of a copper-nickel alloy forming a mechanical and electrical connection to said support member,
a second layer having a very high silver content of up to 100%,
a third layer of a silver-tin oxide composition,
a fourth layer of a silver alloy containing up to a 100% silver, and
a fifth layer of a gold alloy containing up to 100% gold.

4,374,312
PANEL TYPE HEATING APPARATUS
John W. Damron, P.O. Box 402603, Dallas, Tex. 75240
Filed Mar. 16, 1981, Ser. No. 243,865
Int. Cl.³ F24H *9/02*
U.S. Cl. 219—345 **10 Claims**

1. A panel type heating apparatus comprising:
a sheet of electrically conductive paper having a resistance to current flow and operable to generate heat when connected to a source of electric energy;
spaced apart primary conductor element means fixed to said sheet and to respective electrical conductor leads;
a first substantially rigid relatively thick walled member disposed on one side of said sheet, said member being of electrical and heat insulative material and forming a supporting surface for said sheet;
a second relatively thin walled member disposed on the opposite side of said sheet, said second member being of an electrically insulative but heat conductive material;
means for securing said sheet to at least one of said members, said securing means comprising at least one elongated strip of electrically non-conductive tape having an adhesive layer on opposite sides for securing said tape to said sheet and said one member whereby said sheet is secured against movement with respect to said one member; and
means for securing said first and second members in assembled relationship with said sheet wherein said sheet is

disposed between said members and is adapted to generate heat to be conducted by and radiated from said second

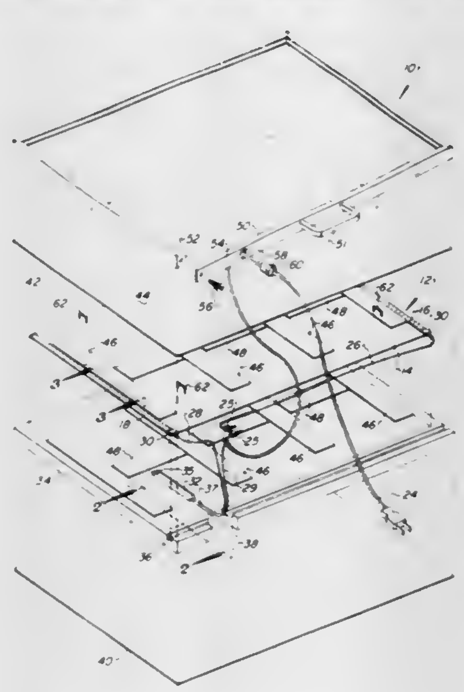

member when electrical current is passed through said sheet.

4,374,313

ARRANGEMENT FOR WORKING INTERNAL ROTATIONAL SURFACES OF METAL PARTS IN A CYLINDRICAL OPENING HAVING A HIGH SLENDERNESS RATIO

Ludvik Mateja, Velke Mezirici, and Zdenek Chaloupka, Merin, both of Czechoslovakia, assignors to Motorpal Jihlava, narodni podnik, Jihlava, Czechoslovakia

Filed Dec. 4, 1980, Ser. No. 213,168

Claims priority, application Czechoslovakia, Dec. 5, 1979, 8428-79

Int. Cl.³ B23P *1/12*

U.S. Cl. 219—69 E **4 Claims**

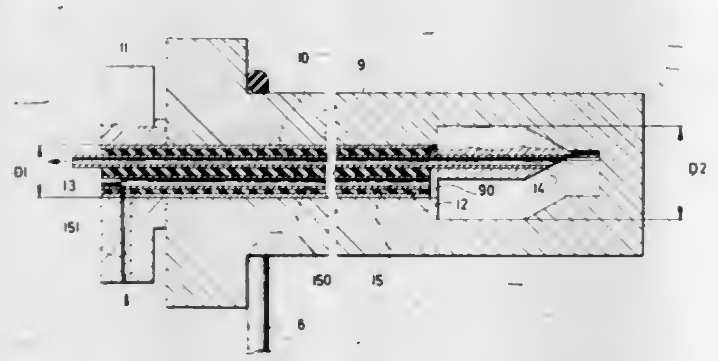

1. An arrangement for working internal rotational surfaces of a metal part having a cylindrical opening or in a cylindrical through-going opening having a high slenderness ratio, comprising a working electrode connected to the negative pole of a source of burning electrical impulses, the positive pole of which is conductively connected with the metal part, and cylindrical guiding sleeve having a bore therethrough, a supporting tube and an electrode, the electrode being fixed conductively on the supporting tube, said tube being arranged rotatably and eccentrically in the cylindrical guiding sleeve from which it is insulated, the external diameter of the sleeve corresponding to the internal diameter of the cylindrical opening of the metal part, the cross-section of the electrode when the electrode is in its position for insertion in the opening of the metal part at the maximum corresponding to the diameter of the bore through the cylindrical guiding sleeve.

4,374,314

LASER TEMPLATE TRIMMING OF CIRCUIT ELEMENTS

James J. Deacutis, Somerville, Mass., assignor to Analog Devices, Inc., Norwood, Mass.

Filed Aug. 17, 1981, Ser. No. 293,678

Int. Cl.³ B23K *27/00*

U.S. Cl. 219—121 LJ **5 Claims**

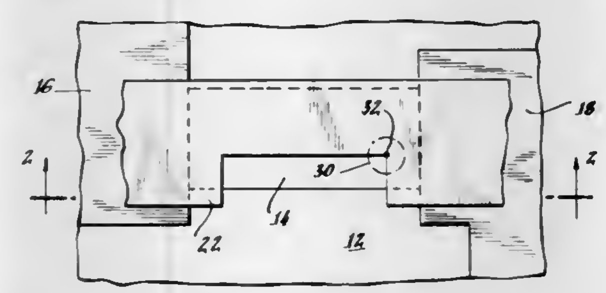

1. The method of laser trimming a thin film circuit element supported on a substrate and coated with a generally non-conductive, optically transparent overlayer comprising:

depositing on said overlayer an optically opaque coating having an edge aligned with a desired trim boundary of said circuit element;

providing a laser having an output beam with a non-uniform cross-sectional energy distribution wherein the maximum energy is concentrated near the center, and a wavelength substantially absorbed by said circuit element and blocked by said opaque coating;

directing said laser beam at the edge of said opaque coating with its peak energy approximately adjacent said edge, to penetrate and volatilize a portion of said circuit element with the maximum energy region of said beam; and

relatively moving said beam along said edge to thereby trim a selected region from said circuit element while substantially avoiding contact of low energy portions of said beam with the remaining portion of said circuit element.

4,374,315

GOLF CLUB SHAFT AND METHOD OF MAKING THE SAME

Robert L. Timbrook, 883 Linda Flora Dr., Los Angeles, Calif. 90049

Division of Ser. No. 117,964, Feb. 4, 1980, abandoned. This application Aug. 27, 1981, Ser. No. 297,029

Int. Cl.³ B23K *27/00*

U.S. Cl. 219—121 LD **2 Claims**

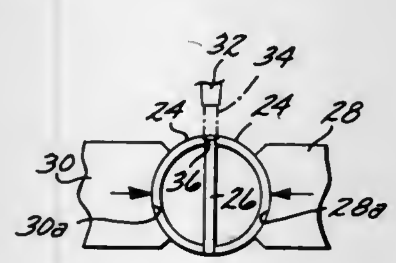

1. A method of forming a golf club shaft that may be adjusted to provide a desired stiffness thereto depending on the configuration it occupies relative to a golf club head to which it is secured, said method comprising the steps of:

a. transforming first and second strips of a resilient laser weldable metal into longitudinally tapering first and second sections of semi-circular transverse cross section, each of said sections having a pair of laterally spaced, longitudinally extending free edges;

b. providing an elongate tapered web of a resilient laser weldable metal;

c. disposing said pairs of free longitudinal edges of said first and second sections in pressure contact with opposite longitudinal side edge portions of said web;

d. laser welding said free edge portions of said first and second sections to opposite side edges of said web to provide first and second diametrically opposed, longitudinally extending beads in which portions of said sections and web of said laser weldable metal merge to secure said web to said sections without altering the physical characteristics of said sections; and

e. trimming portions of said beads from said shaft that project outwardly from the exterior surface on the latter, with said shaft having maximum stiffness when said shaft is so secured to a golf club head that said web is normal to the striking face of said golf club head.

4,374,316

SEMICONDUCTOR INTEGRATED CIRCUIT SUPPORTER HAVING A HEATING ELEMENT

Kazuo Inamori, Kyoto, and Kiyoshige Miyawaki, Kagoshima, both of Japan, assignors to Kyoto Ceramic Co., Ltd., Japan

Filed Aug. 22, 1980, Ser. No. 181,379

Claims priority, application Japan, Aug. 29, 1979, 54-110904

Int. Cl.³ H05B *1/00*

U.S. Cl. 219—209 **10 Claims**

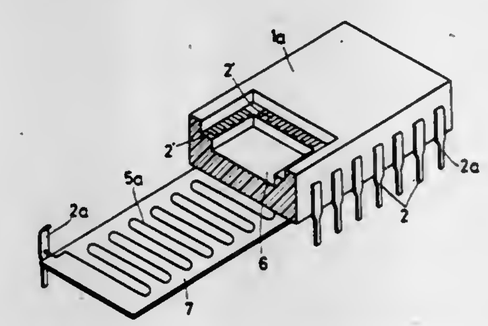

1. A semiconductor integrated circuit supporter comprising:

a body comprising a thermally conductive, electrically non-conductive material, said body being configured to support an integrated circuit on a first flat surface thereof;

a cavity disposed within said body and said first flat surface configured to support an integrated circuit is located within said cavity;

a flat heating element disposed on a second flat surface of said body, said second flat surface being in an overlapping spaced-apart relationship with said first surface; and

means for joining said flat heating element to a source of energy such that said flat heating element, when activated, conducts heat to said first surface of said body.

4,374,317

BURN-IN CHAMBER

James I. Bradshaw, Houston, Tex., assignor to Reliability, Inc., Houston, Tex.

Filed Jul. 5, 1979, Ser. No. 55,058

Int. Cl.³ H05B *1/00*

U.S. Cl. 219—385 **11 Claims**

1. An improved apparatus for stressing semiconductors disposed on a component unit having a component retaining portion and a coupling portion, said apparatus being of the type including (i) a chamber having an air space and a wall surrounding said air space, (ii) environment controlling means for maintaining said air space at a temperature substantially greater than that outside said chamber, and (ii) connection means for providing an electrical connection between the inside of said chamber and the outside of such chamber, said connection means including a connector having coupling means for releasably coupling with said coupling portion of said component unit while said component retaining portion of said component unit is disposed within said air space of such chamber, wherein the improvement comprises:

isolation means for isolating said connector from said air space such that contact between the air of said air space and the connector is substantially reduced and the flow of air between the inside and outside of said chamber adjacent said connector is substantially inhibited,

said isolation means including (i) a cavity extending from the inner surface of said wall of such chamber through at least a portion of said wall of said chamber, (ii) a cavity base disposed between the inner surface of said wall and the exterior of said chamber and (iii) a cavity cover disposed

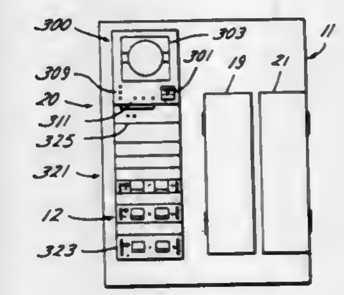

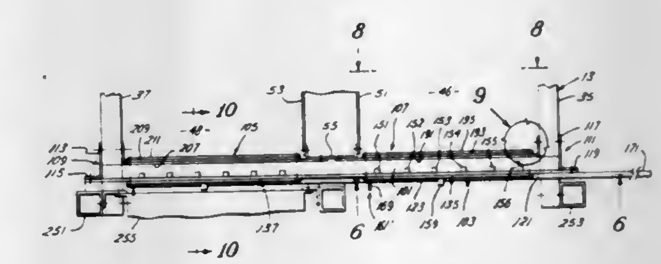

between said cavity base and said air space of said chamber,

said coupling means of said connector being disposed between said cavity cover and the exterior of said chamber and being spaced away from said cavity cover and means for supplying a cooling medium between said cavity cover and said cavity base.

4,374,318

APPARATUS FOR HEATING FOOD, SUCH AS FRENCH FRIED POTATOES

John W. Gilliom, Wooster, Ak., assignor to UMC Industries, Inc., Stamford, Conn.

Filed Sep. 8, 1980, Ser. No. 185,210

Int. Cl.³ H05B *1/00*; F24C *7/00, 15/32*

U.S. Cl. 219—400 **34 Claims**

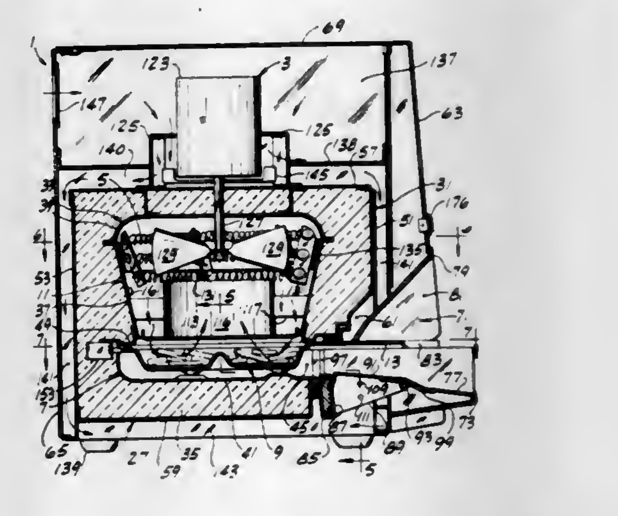

1. A convection oven having a bottom, top and wall structure defining a chamber, the chamber having a lower section forming a compartment at the bottom of the chamber, a pan for holding an item or items and in particular food items to be heated such as french fried potatoes, the oven wall having an access opening to said compartment from one side of the oven constituting its front for insertion and removal of the pan, the chamber further having an upper section above the lower section constituting an air delivery and return section, the oven

wall completely surrounding said upper section, a partition extending generally vertically in said upper section having its upper end spaced from the top of said chamber and its lower end adjacent the top of said compartment, said partition dividing said upper section into a first passage for downward flow of heated air into the pan in said compartment and a second passage for upward return flow of air from said compartment, means at the top of said upper section of the chamber for blowing air down through the first passage, into the pan in said compartment, over and around an item or items in the pan, and thence up and out of the pan and up through said second passage back to said blowing means, means in said upper section for heating the air, said compartment and pan being so formed relative to one another and the pan being so formed relative to the lower end of said air delivery and return section that the compartment receives the pan, as inserted into the compartment through said access opening, with the pan supported at its bottom in said compartment and with the top of the pan generally at the level of the lower end of said air delivery and return section, with the pan, at its top, positioned in part directly under the lower end of the first passage for downward flow from the first passage into the pan and in part directly under the lower end of the second passage for flow of air up and out of the pan into the second passage, and means for interengagement of the pan generally all around the pan with respect to the lower end of said air delivery and return section and in surrounding relationship with respect to the lower end of both of said passages so that the pan cooperates with said air delivery and return section and itself forms an intermediate generally closed passage through which the heated air is confined to flow from the first to the second passage, whereby substantially all of the air exiting from the lower end of the first passage flows through the pan over and around the item or items in the pan and thence up through the second passage and back to the blowing means.

4,374,319

COUNTER-TOP OVEN

Raul Guibert, Los Angeles, Calif., assignor to Sunset Ltd., Los Angeles, Calif.

Continuation-in-part of Ser. No. 97,787, Nov. 27, 1979, Pat. No. 4,307,286. This application Dec. 30, 1980, Ser. No. 221,206

Int. Cl.³ A21B *1/22;* F27D *11/02*

U.S. Cl. 219—400 10 Claims

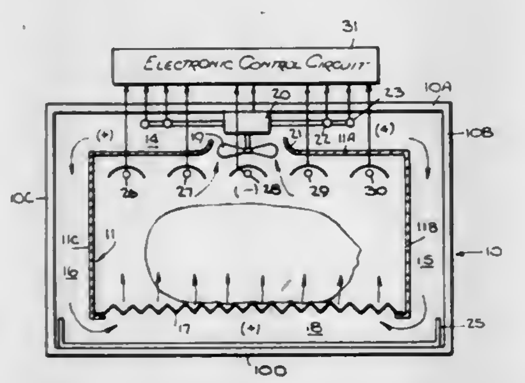

1. A counter-top oven adapted to effect low-temperature cooking of food having a predetermined cooking temperature at a relatively rapid rate whereby nutrients and other valuable food constituents are preserved, said oven comprising:

A. A food-receiving compartment having a perforated bottom wall and a top wall provided with a port, said compartment being supported within a case and being spaced therefrom to create air spaces therebetween;

B. means external to said compartment to heat air to a high temperature level well above said cooking temperature and to force the hot air through the perforations in said bottom wall at high pressure to produce a high velocity flow of hot air through the compartment in heat exchange relation with the food therein, the hot air being discharged from the compartment through the port, said means being constituted by a motor-driven fan in one of said air spaces arranged to draw air from said compartment through said top wall port to produce a negative pressure in said compartment and a positive pressure in the air spaces, the resultant pressure differential forcing air through said perforations; and

C. means periodically to interrupt the flow of hot air to generate within the compartment hot air pulses having no-flow intervals therebetween in a manner creating a laminar heat transfer pattern wherein heat acquired by the outer layer of the body of food in the compartment is transferred in these intervals to the intermediate layers and core of the body, causing the outer layer to go down in temperature during these intervals to a degree preventing the temperature of the outer layer from ever rising substantially above the cooking temperature despite the much higher temperature of the hot air pulses in heat exchange relation therewith.

4,374,320

MOTORIZED OVEN DOOR LATCH AND CONTROL CIRCUIT FOR SAME

Eugene J. Barnett, Mansfield, Ohio, assignor to White Consolidated Industries, Inc., Cleveland, Ohio

Filed May 18, 1981, Ser. No. 264,470

Int. Cl.³ A21B *1/00;* F27D *11/02*

U.S. Cl. 219—413 14 Claims

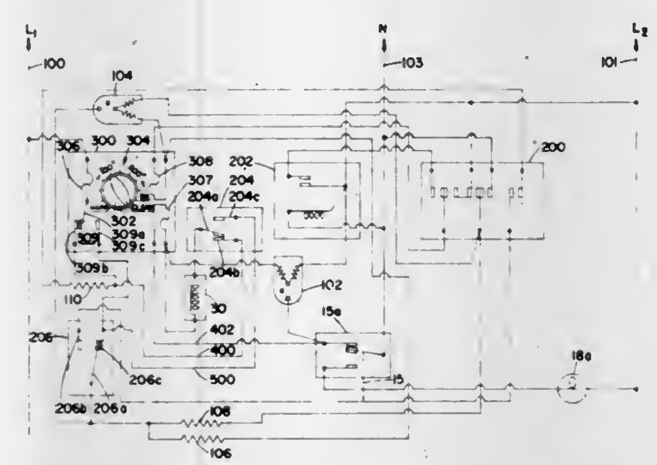

1. In a domestic range having a body including an outwardly opening, pyrolytic self-cleaning oven chamber, electrical heating means supplying heating energy into the oven chamber and a hinge-mounted oven door supported by the body and movable from an open to a closed position to preclude access to the oven chamber, a motorized oven door latch mechanism for locking the oven door in a closed position, comprising:

a motor means supported by the range body, the motor means having a rotatable drive shaft;

an elongated latch rod having at one end a hook portion extending generally radially away from the longitudinal axis of the rod, the other end of the rod being rotatably driven by the drive shaft, the latch rod being restrained against free translational movement along its axis relative to the range body at at least one point;

an elongated member having its end portions fixed to the oven door;

a cam surface fixed to the center portion of the elongated member, the cam surface being radially spaced from the longitudinal axis of the elongated member, wherein with the oven door closed, the latch rod hook portion can be rotated by the motor means to engage the hook portion with the cam surface to exert a pulling force on the cam surface and place said elongated member in torsion to bias and maintain the over door in tight sealing engagement with the range body.

4,374,321

AUTOMATIC TEMPERATURE CONTROLLER FOR AN ELECTROPHOTOGRAPHIC APPARATUS FUSER AND METHOD THEREFOR

Joseph E. Cunningham, Jr., and Philip T. Gianos, both of Boulder, Colo., assignors to International Business Machines Corporation, Armonk, N.Y.

Continuation of Ser. No. 102,508, Dec. 11, 1979, abandoned. This application Sep. 10, 1981, Ser. No. 300,729

Int. Cl.³ H05B *1/02*

U.S. Cl. 219—497 6 Claims

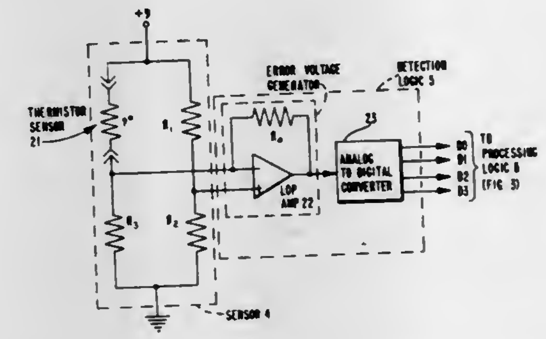

1. In a copier system, including a heated device, a device heater and a device temperature sensor, the invention comprising:

a digital converter, connected to the temperature sensor, operable to supply a digital value, from a set of temperature values, representing the temperature of the heated device sensed by the sensor;

an alternating current source operable in accordance with a control signal supplied at an input, to selectively provide successively positive and negative half-cycles of alternating current;

a counter, connected to the alternating current source, operable, as each alternating current cycle becomes zero, to count as digital values, successively provided half-cycles within a set of half-cycles;

a memory, connected to the converter and counter, storing as electrical states, signals representing points in an array defined by the set of temperature values in one dimension and the set of counts of half-cycles in another dimension, each point having a predefined one of a plurality of values;

accessing circuits, connected to the memory, the counter and the source, operable to sequentially access points in the array defined by a temperature digital value and, the counts of half-cycles, and supply to the source input a control signal for each accessed array point having a specified value;

whereby the heated device receives from the source a predetermined number of the half-cycles of said set of half-cycles.

4,374,322

APPARATUS FOR CONTROLLING THE ABSORPTION OF ONE OR MORE COLOR COMPONENTS IN A DYEING FLUID

Erich Hoffmann, Freigericht, and Werner Ptaschek, Bruchköbel, both of Fed. Rep. of Germany, assignors to W. C. Heraeus GmbH, Hanau, Fed. Rep. of Germany

Filed Apr. 24, 1980, Ser. No. 143,441

Claims priority, application Fed. Rep. of Germany, Apr. 27, 1979, 2917075

Int. Cl.³ G01J *3/34*

U.S. Cl. 250—226 14 Claims

1. A system for controlling the dye exhaustion of at least one color component contained in a dye liquor in a dyer's bath for dyeing of textile materials or the like comprising

means (1.1) regulating the temperature of the dye liquor or bath in a vat (1) as a function of change in extinction;

photometric means (4) sensing absorption of at least one color component;

means (5) providing a signal (E) representative of the extinction;

means (6) processing the extinction signal (E) for generating a signal representative of the actual exhaustion rate;

means (7.1) for providing a nominal exhaustion rate signal;

comparator means (7) connected to and controlled by the nominal exhaustion rate signal providing means and the actual exhaustion rate generating means, and generating a dye exhaustion rate setting signal (7.2) as a function of deviation of the actual, from the commanded dye exhaustion rate;

means (8) for controlling dye exhaustion rate connected to and receiving the dye exhaustion rate setting signal, connectable (9) with means (11) generating a signal representative of a

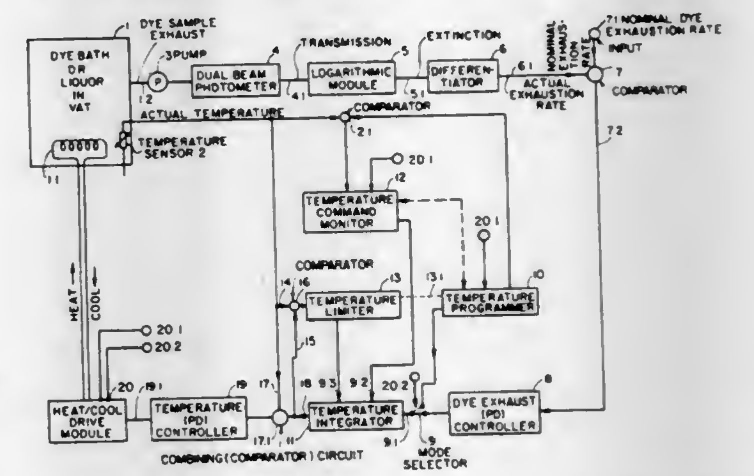

temperature to effect dye exhaustion at a predetermined rate and providing a nominal temperature control signal (18) representative of the desired temperature at which dyeing should be performed;

temperature sensing means (2) generating an actual temperature signal (17);

signal combining means (17.1) receiving the actual temperature signal and the nominal temperature signal, and generating a corrected temperature control signal as a function of deviation of the actual from the nominal temperature;

and dye liquor temperature control means (19) controlling the temperature of the dye liquor or bath in the vat (1) under control of said temperature control signal.

4,374,323

FOCUSING APPARATUS FOR USE IN A SYSTEM FOR RECOVERING INFORMATION FROM AN OPTICALLY-READABLE STORAGE MEDIUM

John S. Winslow, Altadena, and Wayne R. Dakin, Redondo Beach, both of Calif., assignors to Discovision Associates, Costa Mesa, Calif.

Division of Ser. No. 920,701, Jun. 30, 1978, Pat. No. 4,236,050. This application Aug. 11, 1980, Ser. No. 177,148

Int. Cl.³ G11B *11/00*

U.S. Cl. 250—201 2 Claims

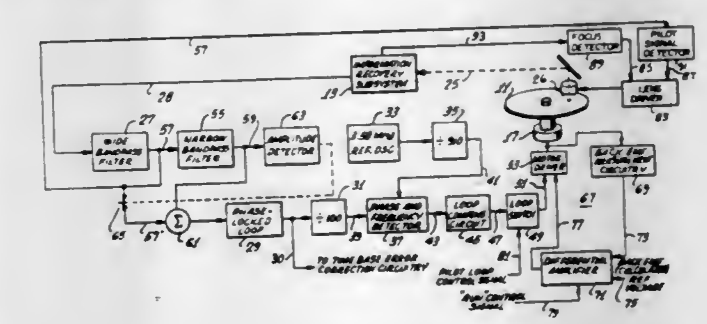

1. In combination:

a movable information storage medium having a plurality of substantially parallel information tracks formed therein:

means for scanning said storage medium with a beam of radiation to recover information recorded thereon;

means for focusing the beam of radiation on a selected one of

said plurality of information tracks to recover information recorded thereon, the information recorded on each of said plurality of information tracks including a pilot signal having a phase angle aligned with the phase angle of the pilot signal recorded on adjacent information tracks, whereby said scanning means is operable to recover the pilot signal from said storage medium even when the beam of radiation is being directed at a plurality of information tracks simultaneously;

said focusing means including
- lens means for directing the beam of radiation at said storage medium,
- means for detecting when said beam of radiation is focused on a single information track,
- means for initially retracting said lens means to an initial position; and
- means operable after said lens means has been retracted to said initial position for moving said lens means relative to said storage medium until it is determined by said focus detecting means that focus of the beam of radiation on the selected information track has been achieved,

said initial position for said lens means being defined by the location at which detection of the pilot signal by said scanning means first ceases as said lens is being retracted, thereby reducing the range over which said lens means must be moved for initial acquisition of focus.

4,374,324
OPTICAL FOCUSSING DEVICE WITH INCLINATION DETECTION
Gerard E. Van Rosmalen, and Willem G. Opheij, both of Eindhoven, Netherlands, assignors to U.S. Philips Corporation, New York, N.Y.
Filed Nov. 10, 1980, Ser. No. 205,554
Claims priority, application Netherlands, Sep. 2, 1980, 8004969
Int. Cl.³ G01J *1/20*
U.S. Cl. 250—201 **3 Claims**

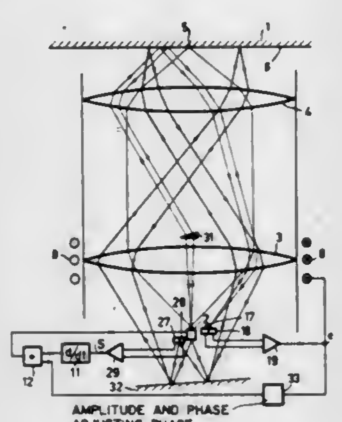

1. An optical focussing device comprising a radiation source, means for focussing radiation from said source onto an object, means for detecting a focussing error and providing a first signal representative of said focussing error, means for detecting a local inclination of the object relative to a plane normal to an optical axis of said focussing means, said inclination detecting means producing a second signal representative of said inclination, and control means responsive to said first and second signals for moving at least one of said source, focussing means or parts thereof relative to the object so as to reduce the focussing error.

4,374,325
IMAGE INTENSIFIER ARRANGEMENT WITH AN IN SITU FORMED OUTPUT FILTER
Jonathan R. Howorth, Maldon, England, assignor to English Electric Valve Company Limited, Chelmsford, England
Filed Jul. 11, 1980, Ser. No. 168,339
Claims priority, application United Kingdom, Jul. 11, 1979, 7924200
Int. Cl.³ H01J *31/50*
U.S. Cl. 250—213 VT **5 Claims**

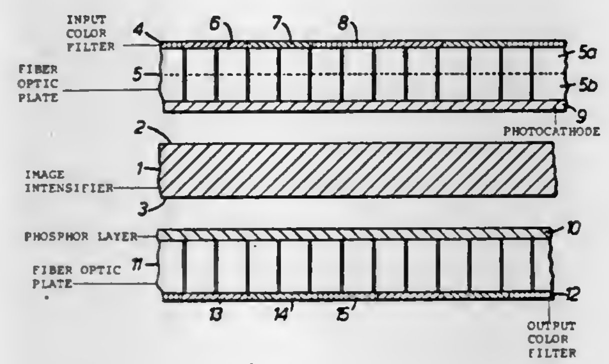

1. A method of forming the output filter of an image intensifier arrangement including an image intensifier device arranged to receive an incident optical image at an input surface thereof and, in response thereto, to produce a re-constituted optical image of greater intensity at an output surface thereof, two optical filters each having a plurality of adjacent co-planar color selective elements of at least two colors with one of said filters being an input filter located adjacent to said input surface in an image receiving path and the other of said filters being an output filter located adjacent to said output surface in an output optical path, and with said two filters being so arranged that light for corresponding points in the incident image and the re-constituted image passes through corresponding color selective elements in the respective filters; said method including: after the image intensifier device and the input filter have been assembled, defining the positions of the individual color selective filter elements of the output filter by illuminating the input filter sequentially with light of different colors which are selectively passed by filter elements of a corresponding color, so as to produce at said output surface a re-constituted image of the individual filter elements of said input filter; and utilizing the re-constituted image to produce said output filter in situ at said output surface.

4,374,326
METHOD FOR DETERMINING THE PROPORTION OF AT LEAST ONE MATERIAL IN A MOVING MIXTURE OF MATERIALS
John S. Wykes, Allenton, and Ian Adsley, Burton-on-Trent, both of England, assignors to Coal Industry (Patents) Limited, London, England
Division of Ser. No. 911,247, May 31, 1978, Pat. No. 4,275,298. This application Aug. 15, 1980, Ser. No. 178,420
Claims priority, application United Kingdom, May 31, 1977, 22941/77
Int. Cl.³ G01V *5/00*
U.S. Cl. 250—255 **4 Claims**

1. A method of determining the proportion of at least one material in a moving inhomogeneous mixture of coal, and stone or shale materials comprising moving an inhomogeneous mixture of materials past a radiation sensor, shielding the radiation sensor, sensing over a period of time an intensity of radiation emitted by at least one of the materials in the moving mixture, deriving electrical signals indicative of the sensed intensity, compensating for variations in the derived signals due to the inhomogeneity of the mixture by averaging the derived signals and further deriving a signal indicative of averaged intensity of radiation, comparing the further derived averaged radiation

intensity signal with at least one preselected reference value of signal corresponding to a known proportion, and determining

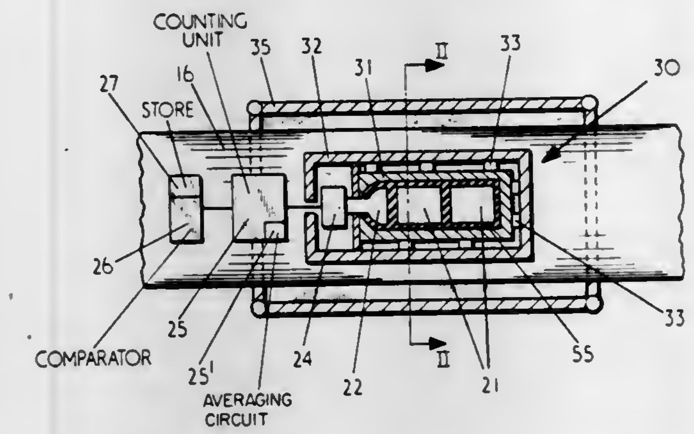

the proportion of said at least one material in the mixture of materials.

4,374,327
DEVICE FOR INDICATING SPECIMEN STAGE POSITIONS IN AN ELECTRON MICROSCOPE
George Christov, 5204 Bangor Dr., Kensington, Md. 20795
Filed Jan. 27, 1981, Ser. No. 228,872
Int. Cl.³ G21K *5/10*
U.S. Cl. 250—442.1 **5 Claims**

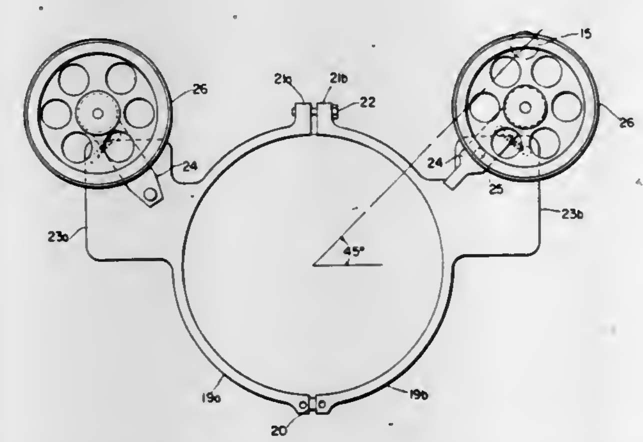

1. A device for indicating positions of a specimen stage in an electronic microscope having manually operated vertical control rods engaging the specimen stage to shift the stage in mutually perpendicular directions, a bracket detachably mountable upon the housing of an electron microscope, a pair of arms pivotally mounted on said bracket, a pair of rotatable circular members each rotatably mounted on a said arm and having peripheral surfaces engaging respectively said control rods and rotating in conjunction with the motion of said control rods, spring means urging respectively each of said arms in a direction to maintain a said circular member in contact with a said control rod, potentiometer means connected to said circular members for generating electrical signals in response to rotary movement of said circular members, and means responsive to said electrical signals for indicating visually reference values designating the position of the stage with respect to said directions.

4,374,328
PHOTOLUMINESCENT INDICATOR
Vincent J. Tekippe, Des Plaines, and Lawrence E. Lach, Chicago, both of Ill., assignors to Gould Inc., Rolling Meadows, Ill.
Filed Apr. 27, 1981, Ser. No. 257,825
Int. Cl.³ F21V *9/16*; **G01J** *5/00, 5/48*
U.S. Cl. 250—458.1 **20 Claims**

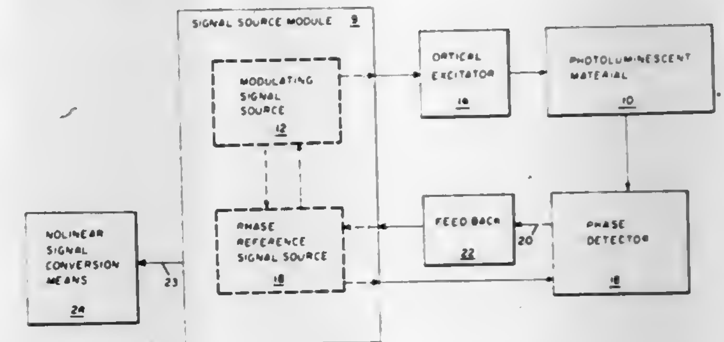

1. A photoluminescent indicator apparatus comprising:
a. a photoluminescent material having a photoluminescent decay rate which varies as a function of environmental conditions;
b. a signal generating means having a phase reference signal means for generating a reference signal, and a signal source means for generating a modulating signal;
c. means for optically exciting a first sample of said photoluminescent material in accordance with a first modulated signal from said modulating signal source to generate an excitation output signal functionally dependent on said first modulating signal and indicative of said environmental conditions;
d. phase-detection means for comparing the difference in phase of said reference signal and said excitation output and for generating a phase differential signal functionally related to the photoluminescent decay rate of said first sample; and
e. feedback means for adjusting said reference signal in accordance with said phase differential signal.

4,374,329
SMOKE DETECTOR WITH TEST APPARATUS
George A. Schoenfelder, Downers Grove; Gerald D. Rork, Sleepy Hollow, and Richard E. Hiltenbrand, Naperville, all of Ill., assignors to Pittway Corporation, Aurora, Ill.
Filed Apr. 24, 1981, Ser. No. 257,095
Int. Cl.³ G08B *29/00*
U.S. Cl. 250—574 **32 Claims**

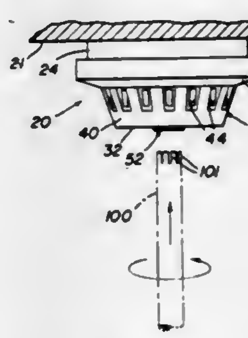

1. Test means for a smoke detector device having a light source, light responsive means, and a smoke chamber therebetween, light from the light source being directed through a predetermined scattering region of the smoke chamber and reflected from smoke in the scattering region to the light responsive means for activating an alarm at a predetermined smoke density in the scattering region, said test means comprising: control means shiftable between a normal condition and a test condition, said control means including light reflecting means disposed outside the scattering region, said control

means in the normal condition thereof maintaining said light reflecting means in non-reflective relationship with respect to the light entering the smoke chamber from the light source, said control means in the test condition thereof causing light entering the smoke chamber from the light source to intercept said light reflecting means outside the scattering region and be reflected by said light reflecting means to the light responsive means for causing the light responsive means to respond as if the predetermined smoke density were in the scattering region for actuating the alarm.

4,374,330

CONTROL CIRCUIT FOR A PART WHICH IS MOVED IN AN OSCILLATING MANNER BY AN ELECTRIC DRIVE

Rainer Fey, Adalbert-Stifter-Strasse 31, D-8720 Schweinfurt, Fed. Rep. of Germany

Filed Aug. 26, 1980, Ser. No. 181,742

Claims priority, application Fed. Rep. of Germany, Sep. 6, 1979, 2936018

Int. Cl.³ H01H *47/00;* **F04B** *17/00*

U.S. Cl. 307—132 E **11 Claims**

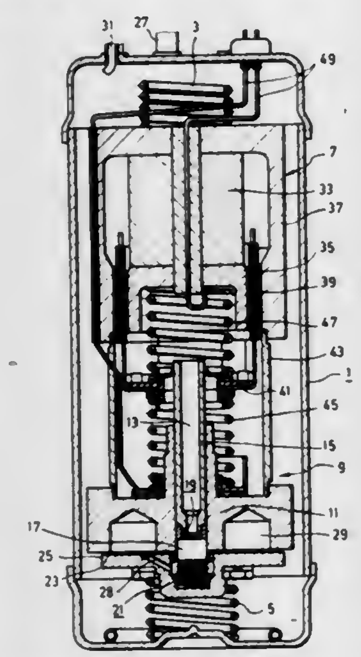

1. Control circuit for a part which is movable in an oscillating manner by an electric drive, particularly for a driving coil **39**; **111**; **125**; **129** of a vibration piston compressor, whose vibration piston is spring-mounted, with an oscillator stage **61**; **87** and a driver stage **51**, **53**, **57**; **71**,**73**,**75**, **77**, **89** controlled by said oscillator stage **61**; **87** and periodically switching on or off the driving current of the drive and with a current sensor responding to the driving current wherein the frequency of the oscillator stage is selected in such a way that the switching frequency of the driver stage is approximately equal to the natural frequency of said oscillating part, characterized in that a control stage **55**,**65**,**59**; **55**,**65**,**91**,**83**,**85**,**89** which is connected to a current sensor **55**;**113**; **131** responding to the driving current switches off the current delivered by said driver stage until the start of the next driving current phase of said oscillator stage when the driving current exceeds a predetermined value.

4,374,331

D-TYPE FLIP-FLOP CIRCUIT

Yuji Yamamoto, Fujisawa, and Sei Shiragaki, Yamato, both of Japan, assignors to Yamatake-Honeywell Co., Ltd., Tokyo, Japan

Filed Jan. 22, 1981, Ser. No. 227,562

Claims priority, application Japan, Jan. 24, 1980, 55-6355

Int. Cl.³ H03K *3/037, 3/286*

U.S. Cl. 307—291 **2 Claims**

1. A flip-flop circuit comprising:

a first NAND gate having a pair of input terminals and an output terminal;

means for coupling an input signal to one of said pair of first NAND gate input terminals;

means for coupling a clock signal to the other of said pair of first NAND gate input terminals;

a second NAND gate having a pair of input terminals and an output terminal;

means for coupling said output terminal of said first NAND gate to one of said pair of second NAND gate input terminals;

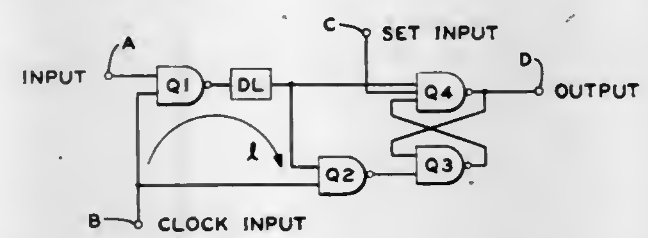

means for coupling said clock signal to the other of said pair of said second NAND gate input terminals;

a non-synchronous flip-flop circuit having a set input terminal and a reset input terminal;

means for coupling said output of said first NAND gate to said set input terminal and means for coupling said output of said second NAND gate to said reset input terminal; and

a delay circuit connected between the input of said second NAND gate and the output of said first NAND gate.

4,374,332

CASCADE TYPE CMOS SEMICONDUCTOR DEVICE

Nobuo Inami, and Kojiro Tanaka, both of Tokyo, Japan, assignors to Kabushiki Kaisha Daini Seikosha, Japan

Filed Sep. 16, 1980, Ser. No. 187,747

Claims priority, application Japan, Sep. 18, 1979, 54-11979

Int. Cl.³ H03K *3/354;* **H01L** *27/04;* **G04C** *10/00*

U.S. Cl. 307—304 **6 Claims**

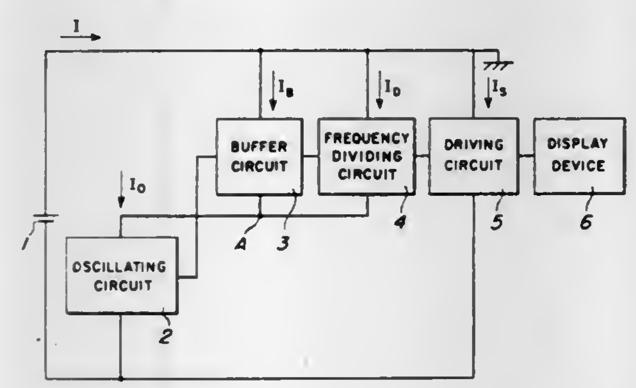

1. A CMOS semiconductor device, comprising:

a first CMOS circuit having input, output and power terminals and comprising a CMOS transistor pair having the source of one transistor and the drain of the other transistor connected together at a node to define said output terminal and for connecting the respective transistor channels in series, having the respective gates of said transistors connected together to define said input terminal, and wherein the drain of said one transistor and the source of said other transistor define said power terminals;

a second CMOS circuit having input, output and power terminals and comprising a CMOS transistor pair having the source of one transistor and the drain of the other transistor connected together at a node to define said output terminal and for connecting the respective transistor channels in series, having the respective gates of said transistors connected together to define said input terminal, and wherein the drain of said one transistor and the source of said other transistor define said power terminals;

respective power terminals of said first and second CMOS circuits being connected together so that the channels of their respective CMOS transistor pairs are connected in series;

a signal lead free of reactive circuit elements and connecting said output terminal of said CMOS transistor pair of said first CMOS circuit to said input terminal of said CMOS transistor pair of said second CMOS circuit; and

wherein said transistors comprising said CMOS transistor pairs have respective threshold voltage values effective to allow signal transmission from said output terminal to said input terminal substantially without current flow between said first and second CMOS circuits.

4,374,333

TWO TERMINAL HALL-SENSOR

Grant D. Avery, Loudon, N.H., assignor to Sprague Electric Company, North Adams, Mass.

Filed May 27, 1980, Ser. No. 153,800

Int. Cl.³ H03K *3/01, 19/18*

U.S. Cl. 307—309 **5 Claims**

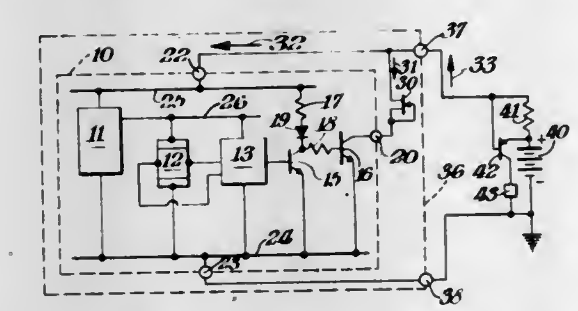

1. A two terminal Hall-sensor comprising:

(a) a Hall-element;

(b) a threshold detector means being connected to the output of said Hall-element for providing two distinctly different output signals in response to a low and a high range of magnetic field ambients at said Hall-element, respectively;

(c) a voltage regulator means for supplying a substantially constant DC voltage to said Hall-element and to said threshold detector;

(d) a pair of DC voltage supply terminals being connected to the input of said voltage regulator; and

(e) a constant current load means for drawing a substantially constant current of a predetermined value from said pair of DC voltage supply terminals in response to one of said detector means output signals and for drawing substantially less current in response to the other of said detector means output signals whereby the magnitude of the supply current flowing through said DC supply terminals provides unambiguous indications respectively of said high and low ambient magnetic field range.

4,374,334

SIGNAL COMPARATOR APPARATUS

William E. Engeler, Scotia, N.Y., assignor to General Electric Company, Schenectady, N.Y.

Filed Mar. 23, 1981, Ser. No. 246,541

Int. Cl.³ H03K *5/24;* **H01L** *29/78*

U.S. Cl. 307—355 **5 Claims**

1. In combination,

a semiconductor substrate of one conductivity type having a major surface,

a first storage electrode insulatingly overlying a first storage region of said substrate adjacent said major surface,

a first gating electrode insulatingly overlying a first barrier region of said substrate adjacent said major surface and coupled to said first storage region,

a first region of opposite conductivity type in said major surface and coupled to said first barrier region,

a second storage electrode insulatingly overlying a second storage region of said substrate adjacent said major surface,

a second gating electrode insulatingly overlying a second barrier region of said substrate adjacent said major surface and coupled to said second storage region,

a second region of opposite conductivity type in said major surface and coupled to said second barrier region,

means for applying during a first period of time a first voltage signal to said first gating electrode to establish in said first barrier region a surface potential corresponding to the level of said first voltage signal,

means for applying during said first period of time a second voltage signal to said second gating electrode to establish in said second barrier region a surface potential corresponding to the level of said second voltage signal,

means for applying a first storage voltage to said first and said second storage electrodes sufficient to establish surface inversion in said first and said second storage regions at the surface potentials of said first and said second barrier regions produced by said first and second voltage signals,

means for providing charge to said first storage region sufficient to establish equilibrium of potentials between said first storage region and said first barrier regions,

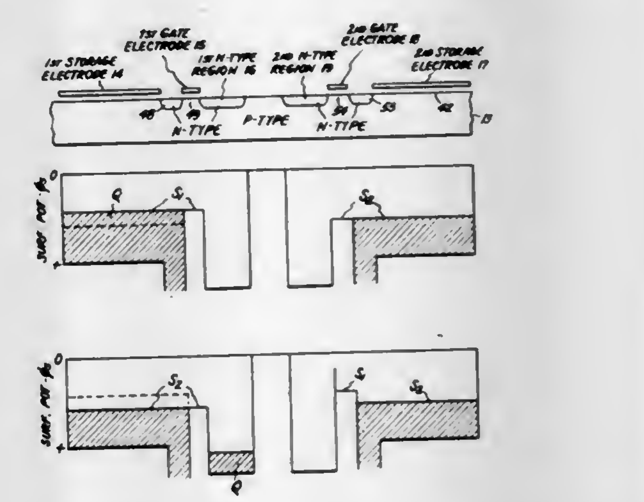

means for providing charge to said second storage region sufficient to establish equilibrium of potentials between said second storage region and said second barrier region,

means for charging said first region of opposite conductivity type and said second region of opposite conductivity type to a predetermined potential which is energetically lower for minority carriers in said substrate than the surface potentials of said first and second barrier regions during said first period,

means for electrically isolating said first and second regions of opposite conductivity type from said charging means during a second period of time,

means for disconnecting said first voltage signal from said first gating electrode and said second voltage signal from said second gating electrode during a first subperiod of said second period,

means for connecting said first voltage signal to said second gating electrode and for connecting said second voltage signal to said first gating electrode during a succeeding second subperiod of said second period, whereby charge flows into one of the regions of opposite conductivity type during the second subperiod of said second period changing the potential thereof with respect to the other of said regions of opposite conductivity type if the surface potential of the one of said first and second barrier regions adjacent thereto is energetically lowered in potential for minority carriers in said substrate.

4,374,335
TUNEABLE I.C. ACTIVE INTEGRATOR
Kiyoshi Fukahori, and Yukio Nishikawa, both of San Jose, Calif., assignors to Precision Monolithics, Inc., Santa Clara, Calif.
Filed May 19, 1980, Ser. No. 151,419
Int. Cl.³ H03H *11/12;* **H03L** *7/08*
U.S. Cl. 307—521 **5 Claims**

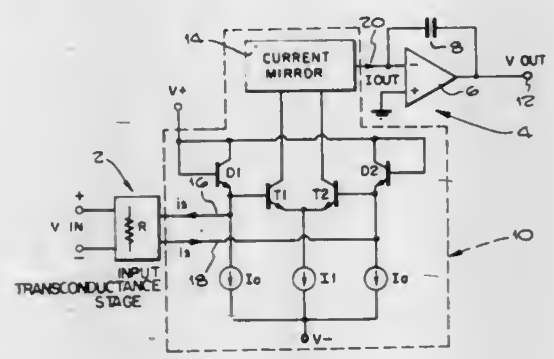

1. An adjustable integrated circuit integrator circuit, comprising:
an input stage means characterized by a predetermined transconductance, and including means to receive an input voltage signal, and means to establish an output current signal which is related to the input voltage signal by said predetermined transconductance,
a conditioning stage means comprising a Gilbert multiplier circuit which is connected to receive said output signal from said input stage means, and in response thereto to establish a conditioned output signal, said Gilbert multiplier circuit having an adjustable current source means comprising I_0 and I_1 current sources and being adapted to receive an adjustment signal and, in response thereto, to adjust the conditioned output signal, the current output of said stage comprising the current output from the input stage multiplied by I_1/I_0, and
an integrating stage means connected to receive the conditioned output signal from the conditioning stage means and in response thereto to provide an integrated output signal,
said integrating stage means together with said conditioning and input stage means establishing an integration time constant for the integrator circuit, said conditioning stage means including means for controllably adjusting its conditioned output signal, and thereby adjusting the integration time constant of the circuit.

4,374,336
FLAT MOTOR
Tokuo Shimizu, Fuchu, Japan, assignor to Olympus Optical Co., Ltd., Tokyo, Japan
Filed May 27, 1981, Ser. No. 268,091
Claims priority, application Japan, Jun. 3, 1980, 55-74510; Jun. 3, 1980, 55-74511
Int. Cl.³ H02K *21/26*
U.S. Cl. 310—154 **6 Claims**

1. A flat motor comprising:
a rotor including a shaft and a plurality of coils arranged concentric with said shaft, each of said coils comprising a winding having a predetermined diameter and an end, the position of the end of said winding being set at a predetermined distance from said shaft;
a magnet having an internal opening and an inner periphery surrounding said internal opening, said inner periphery of said magnet being spaced apart from said shaft by a distance smaller than said predetermined distance; and
a ring-like connector plate provided on said rotor and extending between said rotor and said magnet, the end of the winding of each said coil being electrically connected to said connector plate, said connector plate having a thick-

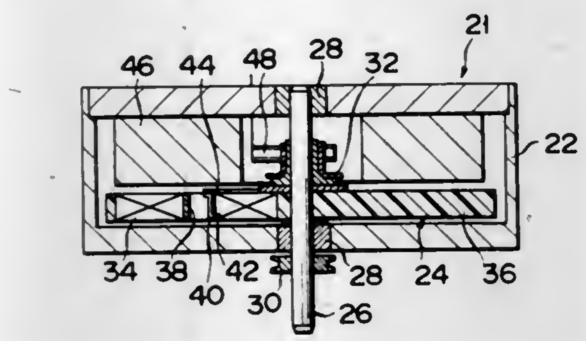

ness at least smaller than said predetermined diameter of said winding of each said coil.

4,374,337
DIRECT CURRENT MOTOR HAVING E-SHAPED INTERPOLES
Yoshinori Kohzai, Hino; Shigeaki Oyama, Hachioji, and Tatsuo Koyama, Hino, all of Japan, assignors to Fujitsu Fanuc Limited, Tokyo, Japan
Filed Feb. 12, 1981, Ser. No. 233,963
Claims priority, application Japan, Feb. 12, 1980, 55-15674
Int. Cl.³ H02K *3/16*
U.S. Cl. 310—186 **4 Claims**

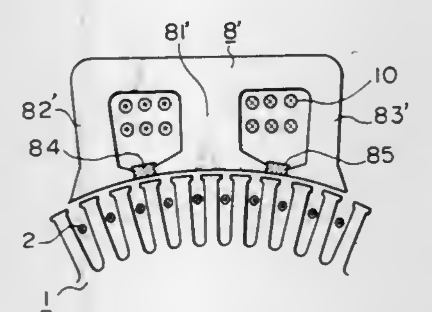

1. A direct current motor comprising an armature having armature windings wound thereon and rotating around the central axis thereof, a plurality of main magnetic poles disposed around said armature having field windings wound thereon, and a plurality of E-shaped interpoles disposed at the intermediate position along the outer circumference of said armature between the adjacent magnetic poles, each of said E-shaped interpoles having two side poles and a center pole to which an interpole winding is wound, characterized in that each of said E-shaped interpoles further comprises interconnecting members which are made of a material having rigidity and which are tightly and irremovably wedged in gaps between said center pole and said side poles, thereby mechanically interconnecting said side poles to said center pole to prevent vibrations of the side poles.

4,374,338
IGNITER STRUCTURES AND METHODS OF MAKING THE SAME
Harvey J. Shopsky, Latrobe, Pa., assignor to RobertShaw Controls Company, Richmond, Va.
Filed Aug. 18, 1980, Ser. No. 178,810
Int. Cl.³ H01T *13/20*
U.S. Cl. 313—142 **51 Claims**

1. In a combination of an igniter insulating body and an outer target bracket that has a target electrode adapted to be disposed in spaced relation to an igniter electrode carried by said igniter body to define a spark gap therewith and that has mounting means for securing said bracket to a frame means adjacent said igniter body to provide said spark gap, said target bracket having holding means holding said igniter body

therein to provide a self-contained assembly that can be subsequently secured as a single unit to said frame means by said mounting means of said target bracket, the improvement wherein said target bracket has slot means therethrough defin-

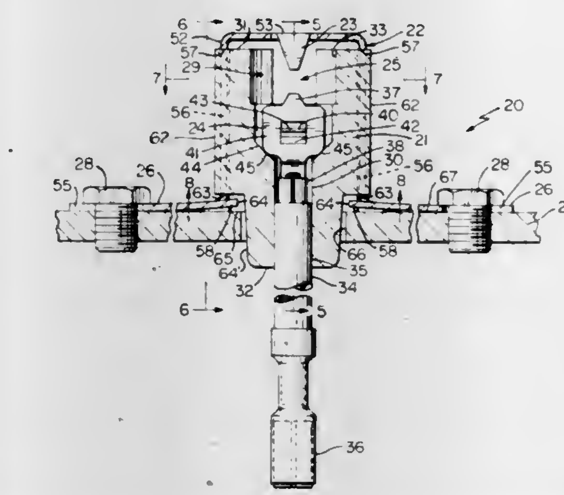

ing opposed surface means of said target bracket, said igniter body having abutment means projecting out through said slot means, said holding means comprising cantilevered tab means of said target bracket engageable with said abutment means and defining one of said opposed surface means of said bracket.

4,374,339
HIGH-PRESSURE SODIUM VAPOR DISCHARGE LAMP
Peter A. W. Tielemans, and Cornelis A. J. Jacobs, both of Eindhoven, Netherlands, assignors to U.S. Philips Corporation, New York, N.Y.
Filed May 19, 1980, Ser. No. 151,500
Claims priority, application Netherlands, May 28, 1979, 7904158; Jan. 18, 1980, 8000326
The portion of the term of this patent subsequent to Mar. 30, 1999, has been disclaimed.
Int. Cl.³ H01J *61/073, 61/22*
U.S. Cl. 313—218 **1 Claim**

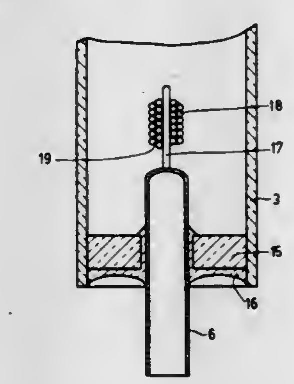

1. A high-pressure sodium vapor discharge lamp having a sealed ceramic discharge vessel containing sodium, mercury and rare gas, in which the weight ratio Na/Hg is from 1/1 to 1/9 and the sodium pressure during operation at design voltage is from 4×10^4 to 10.7×10^4 Pa, current supply conductors extending through the wall of said discharge vessel to tungsten electrodes accommodated inside the discharge vessel, characterized in that an emitter is present on the electrodes which substantially consists of oxygen-bound strontium and oxygen-bound tungsten with the molar ratio of strontium to tungsten being from 3/1 to 50/1 and in which discharge vessel the rare gas pressure at 300° K. is between 1333 and 1333×10^2 Pa.

4,374,340
LOW PRESSURE DISCHARGE LAMP
Albert Bouwknegt, and Petrus C. Lauwerijssen, both of Roosendaal, Netherlands, assignors to U.S. Philips Corporation, New York, N.Y.
Filed Mar. 17, 1980, Ser. No. 130,930
Claims priority, application Netherlands, Apr. 3, 1979, 7902572
Int. Cl.³ H01J *17/16, 61/30, 17/18*
U.S. Cl. 313—220 **4 Claims**

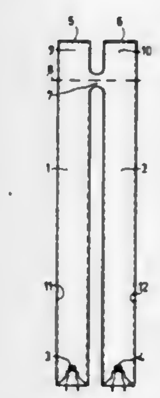

1. A low-pressure mercury vapor discharge lamp which comprises:
a discharge vessel comprising a plurality of parallel tubular portions, first and second spaced electrodes disposed in said vessel, an ionizable medium in said vessel and means for limiting the pressure in said vessel during operation of said lamp, said means including each tubular portion having an integral collar, said collars of the respective tubular portions being sealed around respective apertures in a wall of the respective tubular portions, said collars of the respective tubular portions being interconnected to form a continuous series passage through said tubular portions, the axis of said collars extending substantially transversely to the parallel axis of the tubular portions, the discharge passing through said collars and at least the major part of each tubular portion during operation of the lamp, said collars of said tubular portions being mutually engaged, at least one of said collars being disposed at a distance from the nearer end of the tubular portion on which it is disposed of one to four times the inner diameter of one of said tubular portions.

4,374,341
BEAM FOCUSING MEANS IN A UNITIZED TRI-POTENTIAL CRT ELECTRON GUN ASSEMBLY
Donald L. Say, Waterloo, N.Y., assignor to North American Philips Consumer Electronics Corp., New York, N.Y.
Filed Oct. 15, 1980, Ser. No. 197,308
Int. Cl.³ H01J *29/50, 29/56*
U.S. Cl. 313—414 **5 Claims**

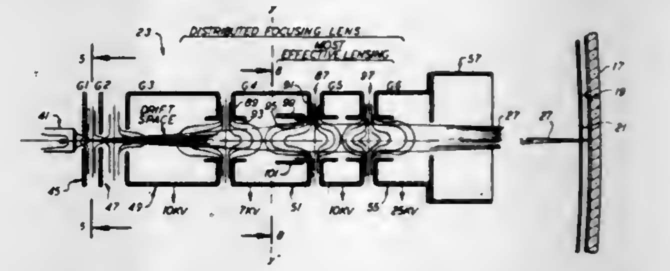

1. A beam focusing improvement in a CRT plural beam tri-potential in-line electron gun assembly embodying a center and two side-related gun structures for use in a color tube having a forwardly positioned cathodoluminescent screen, each of said guns having individual coordinate beam path axes therethrough with the "x" axes thereof oriented in a common horizontal plane, said gun assembly being a construction of

unitized in-line apertured electrode members sequentially positioned forward of individual electron producing cathode elements to provide for each gun an initial beam forming electrode (G1) embodying a discrete substantially elongated aperture-related beam shaping configuration therein whereof the major axis of said configuration is substantially coincident with the "y" axis of said gun structure, an initial beam accelerator electrode (G2), a first high focusing electrode (G3), a low focusing electrode (G4) having a longitudinal dimension defined between rear and forward apertured portions, a second high focusing electrode (G5), and a final accelerator electrode (G6), the "G3–G6" region forming a distributed focusing lens for said beam; said improvement relating to means for particularly modifying that portion of the beam lensing field associated with the forward end of said low focusing electrode (G4) of at least one of said gun structures in said assembly wherein the inherent substantially ovate cross-sectional shaping of the beam, having a major dimension substantially coincident with the "x" axis of said gun structure, is modified to provide a focused substantially circular beam spot at the center of said screen, said improvement comprising: a pair of substantially planar metallic sideboard elements oriented in standing parallel positions in a manner to project inwardly within said low focusing electrode (G4) and being substantially perpendicular to the interior surface of said forward end thereof, one of said sideboard elements being oriented on either side of the center forward aperture in planes substantially parallel with the "x" axis of said gun structure, said orientation effecting positional adjustment of the equipotential lines in the most effective "G4–G6" area of the distributed focusing lens formed spatially within the "G3–G6" region to provide substantially symmetrical lensing for focusing said respective electron beam.

4,374,342
FOCUSING MEANS IN A UNITIZED BI-POTENTIAL CRT ELECTRON GUN ASSEMBLY

Donald L. Say, Waterloo, N.Y., assignor to North American Philips Consumer Electronics Corp., New York, N.Y.
Filed Oct. 15, 1980, Ser. No. 197,312
Int. Cl.³ H01J *29/50, 29/56*
U.S. Cl. 313—414 **7 Claims**

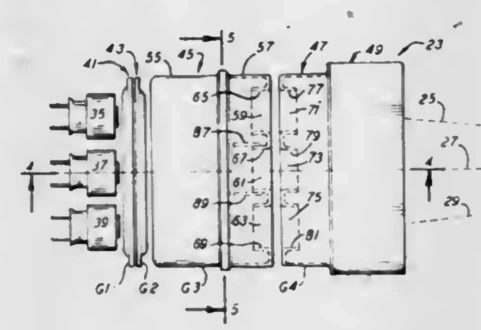

1. A beam focusing improvement in a CRT plural beam bi-potential in-line electron gun assembly embodying a center and two side-related guns for use in a color tube having a forwardly positioned cathodoluminescent screen, each of said guns having a beam path axis therethrough oriented in a common horizontal plane, said gun assembly being a construction of unitized in-line apertured electrode members sequentially positioned forward of individual electron producing cathode elements to provide for each gun an initial beam forming electrode (G1), an initial beam accelerator electrode (G2), a main focusing electrode (G3) having a longitudinal dimension defined between rear and forward apertured ends, and a final accelerator electrode (G4); said improvement relating to means for modifying the lensing field associated with the main focusing of the electron beam traversing at least one of said guns wherein the inherent substantially ovate cross-sectional shaping of the beam is modified to provide a focused substantially circular beam spot at the center of said screen; said improvement comprising: a pair of inserts in the form of substantially planar metallic sideboard elements oriented in standing parallel positions in a manner to project inwardly within said final focusing electrode (G3) and being substantially perpendicular to the interior surface of said forward end thereof, one of said sideboard elements being oriented on either side of the respective forward aperture in a manner to adjust positioning of the equipotential lines inherent in the main lensing field spatially formed within the region to provide substantially symmetrical lensing for the main focusing of said respective electron beam.

4,374,343
THIN KINESCOPE AND ELECTRON BEAM REFLECTOR THEREFOR

Kern K. N. Chang, Princeton, N.J., assignor to RCA Corporation, New York, N.Y.
Filed Aug. 25, 1980, Ser. No. 180,899
Int. Cl.³ H01J *29/72, 31/08*
U.S. Cl. 313—422 **4 Claims**

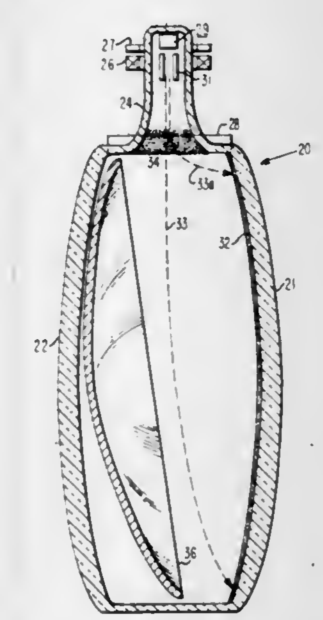

1. A thin kinescope comprising:
a faceplate, a backplate, a screen on the inside surface of said faceplate, an electron gun for providing electrons, and a neck for housing said electron gun arranged so that an undeflected electron beam from said gun initially travels generally parallel to the plane of said screen, a yoke for horizontally and vertically deflecting said electron beam to scan said screen,
a bowl-shaped reflector for focusing said electron beam positioned between and spaced from said faceplate and said backplate and oriented with the concave side facing said faceplate so that electrons from said gun travel along said faceplate between said reflector and said faceplate and are reflected toward said screen by said reflector, said reflector being tilted with respect to said faceplate so that the displacement between said reflector and said faceplate decreases in the direction of electron travel;
a quadrupole having a shunted divergent action for increasing said horizontal deflection and;
a deflection enhancement lens for enhancing said horizontal and vertical deflection.

4,374,344
COLOR PICTURE TUBE WITH ELECTRICALLY CONDUCTIVE FRIT FILM ON ENVELOPE SURFACE

Masayoshi Misono, Chiba, and Shigeki Kitamura, Mobara, both of Japan, assignors to Hitachi, Ltd., Tokyo, Japan
Filed Aug. 18, 1980, Ser. No. 179,476
Claims priority, application Japan, Aug. 22, 1979, 54-106087
Int. Cl.³ H01J *29/88*
U.S. Cl. 313—479 **9 Claims**

1. In a color picture tube comprising a vacuum envelope constituted by a panel portion, a funnel portion and a neck tube, an electron gun structure housed in the neck tube, an electrically conductive film coated on the inner wall surface of the envelope and extending from the funnel portion to the neck tube, and an electrically conductive spacer having one end secured to the electron gun structure and the other end in

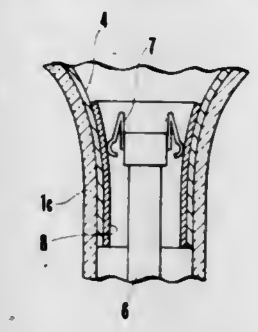

contact with the conductive film, the improvement wherein a portion of the conductive film which makes contact with the conductive spacer comprises an electrically conductive frit film made of a mixture of an electrically conductive material and frit glass.

4,374,345
ELECTRONIC FLASH APPARATUS

Syuichi Takayama, Hachioji, Japan, assignor to Olympus Optical Co., Ltd., Tokyo, Japan
Filed Feb. 25, 1981, Ser. No. 237,940
Claims priority, application Japan, Feb. 29, 1980, 55-24781
Int. Cl.³ H05B *41/32*
U.S. Cl. 315—241 P **7 Claims**

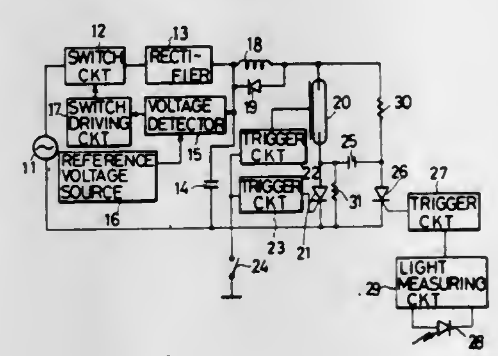

1. An electronic flash apparatus comprising:
an electronic flash tube;
a main capacitor for supplying discharge energy to said electronic flash tube;
a power source circuit connected to said electronic flash tube and to said main capacitor, for charging said main capacitor;
a voltage detecting circuit for detecting the voltage on said flash tube or said main capacitor;
control signal generating means for generating an output signal when the detection voltage of said voltage detecting circuit reaches a discharge continuous voltage, at which time said flash tube is continuously discharged; and
switch means provided in said power source circuit, for inhibiting the power supply from said power supply circuit to said main capacitor and flash tube in response to the output signal from said control signal generating means for a predetermined period of time.

4,374,346
VOLTAGE DETECTION CIRCUITS FOR A-C POWER SUPPLIES

Takuichi Tsuchiya, and Hiroshi Togo, both of Tokyo, Japan, assignors to Nippon Electric Co., Ltd., Tokyo, Japan
Filed Feb. 22, 1980, Ser. No. 123,828
Claims priority, application Japan, Feb. 27, 1979, 54-22118
Int. Cl.³ H05B *41/16, 41/24*
U.S. Cl. 315—276 **12 Claims**

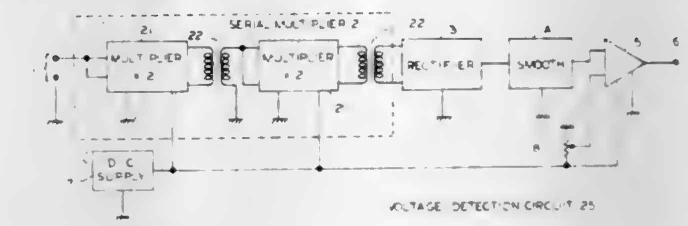

1. A voltage detection circuit for an a-c power supply for a traveling wave tube, said voltage detection circuit comprising means for frequency-multiplying an a-c signal from said a-c power supply, means for rectifying the output of said frequency-multiplying means, means for smoothing the output of said rectifying means, and voltage comparison means for comparing the output voltage of said smoothing means with a predetermined reference voltage to provide a control signal responsive to the comparison at the output of said detection circuit.

3. A method of controlling electrical a-c power supplies which supply an a-c output having a predetermined frequency for a traveling wave tube, said method comprising the steps of:
a. receiving the a-c output;
b. multiplying the frequency of said received a-c output to provide a signal having a frequency which is higher than said predetermined frequency;
c. converting said multiplied frequency to a control voltage signal having amplitude fluctuations corresponding to fluctuations in the a-c output;
d. comparing the voltage of said control voltage signal with a reference voltage; and
e. signalling differences exceeding a predetermined level responsive to said comparison.

4,374,347
BRUSHLESS D-C MOTOR SYSTEM

Rolf Müller, St. Georgen, Fed. Rep. of Germany, assignor to Papst Motoren KG, St. Georgen, Fed. Rep. of Germany
Filed Mar. 6, 1981, Ser. No. 241,059
Claims priority, application Fed. Rep. of Germany, Mar. 19, 1980, 3010435
Int. Cl.³ H02K *29/02*
U.S. Cl. 318—138 **18 Claims**

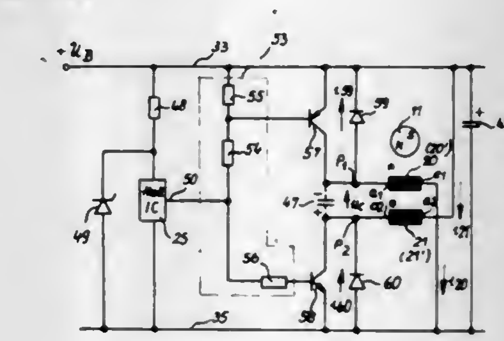

1. Two-pulse, two-filament brushless d-c motor system having
a stator (15); d-c current supply means having two terminals (33,35);
a permanent magnet rotor (11);
rotor position sensing means (25) providing an output signal positioned on the stator and sensing a predetermined orientation of a magnet pole of the rotor with respect to the stator;

armature winding means including two winding strands or filaments (20, 21; 20', 21') wound on the stator, said winding strands or filaments being inductively coupled;
and control circuit means (42) including controlled semiconductor switch means (57, 58; 69, 75; 80, 81) connected to said winding strands or filaments to control pulsed current flow, alternately, through the respective winding strands or filaments,
wherein,
said semiconductor switch means are of respectively opposite, complementary conduction characteristics (pnp: 57, 69, 80; npn: 58, 75, 81);
one terminal (a2) of one winding strand or filament (21, 21') being connected through the main current carrying path of one of said semiconductor switch means (npn: 58, 75, 81) with one terminal (35) of the current supply means;
a similarly acting terminal (a1) of the other winding strand or filament (20, 20') being connected through the main current carrying path of the other, complementary semiconductor switch means (pnp: 57, 69, 80) to the other terminal (33) of the current supply means;
the other terminal (e1) of said one winding strand or filament (21, 21') being connected with the other terminal (35) of the current supply means;
the other terminal (e2) of said other winding strand or filament (20, 20') being connected with said one terminal (33) of the current supply means;
said one inding strand or filament (21, 21') and said other winding strand or filament (20, 20') being tightly a-c coupled together at least at the terminal end portions thereof connected to the respective controlled semiconductor switch means;
wherein, further, said control circuit means includes output connection means (50) and coupling circuit means (53; 65, 68, 74; 82, 87, 89) connecting output signals from the rotor position sensor means to the control terminal of said complementary controlled semiconductor switch means for alternatingly controlling conduction of the respective switch means to cause pulsed current flow through the respective winding strand or filament from said current supply means,
and wherein unilateral conduction means (59, 60; 80, 81'') are provided, respectively connected across the controlled semiconductor switch mens (57, 59, 80; 58, 75, 81) and polarized reversely with respect to said semiconductor switch means to recapture inductive energy stored in the respective winding strands or filaments upon turn-off of current flow therethrough during commutation by the pulsed current flow as controlled by said controlled semiconductor switch means.

4,374,348
WIPER DEVICE
Kiichiro Shimura, Tokyo; Takeo Tamura; Takayoshi Kido, both of Yokohama; Hiroshi Hara, Funabashi, and Morimasa Tanaka, Atsugi, all of Japan, assignors to Nissan Motor Company, Limited, Kanagawa and Ichiko Industries Limited, Tokyo, both of, Japan
Filed Jul. 3, 1980, Ser. No. 165,704
Claims priority, application Japan, Jul. 6, 1979, 54-85091
Int. Cl.³ H02P *1/04*
U.S. Cl. 318—443 **10 Claims**

1. A wiper device comprising:
a wiper blade;
a wiper arm supporting said wiper blade at one end thereof;
a driving means being reversible to drive in first and second directions and connected to said wiper arm so that it can alternately drive said wiper arm in first and second directions;
a control circuit connected to said driving means, said control circuit including a switching means for switching a connection of an electric power supply between first and second circuit connections so as to alternately drive said driving means in said first and second directions; and
a wiper position detecting means for detecting both of predetermined ends of wiper motion in first and second directions, said wiper position detecting means being connected to said switching means so that when said wiper position detecting means detects said end of wiper motion in said first direction, said switching means switches the connection of the power supply from the first connection to the second connection and when said wiper position detecting means detects said end of wiper motion in said second direction, said switching means switches the connection of the power supply from the second connection to the first connection, said wiper position detecting

means including a rotatable element connected to said wiper arm in order to rotate in first and second directions corresponding to said wiper motion and a pair of contacts connected to said switching means of said control circuit and defining both ends of motion of said rotatable element, the first contact of said contacts being located to detect the end of wiper motion in said first direction and the second contact being located to detect the end of wiper motion in said second direction, said rotatable element including an electrically conductive member connected for receiving applied electric potential so that it can alternately apply an electric potential to either one of said contacts for activating said switching means to switch the connection of supplied power between the first connection and the second connection.

4,374,349
CONTROL SYSTEM FOR AN INDUSTRIAL ROBOT
Hajimu Inaba, and Hideo Miyashita, both of Hino, Japan, assignors to Fujitsu Fanuc Limited, Hino, Japan
Filed Aug. 20, 1981, Ser. No. 294,797
Claims priority, application Japan, Sep. 1, 1980, 55-119827
Int. Cl.³ G05B *13/00*
U.S. Cl. 318—568 **2 Claims**

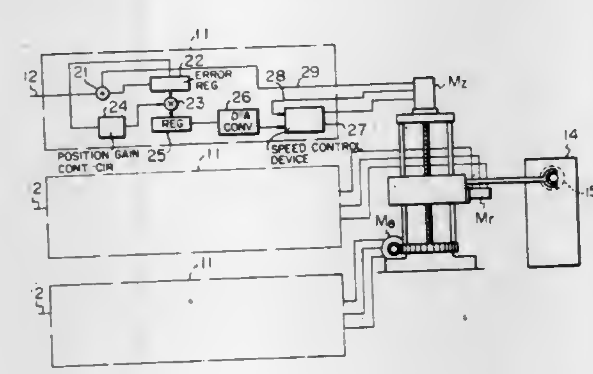

1. A control system for an industrial robot having a set of motors for driving the industrial robot and a set of control circuits for controlling said motors, each of said control circuits comprising:

an adder for receiving a position command input signal and a position feedback signal from a corresponding motor;
an error register for receiving the output signal of said adder means;
a position gain control circuit for receiving the output of said error register;
a position gain multiplier for receiving an output signal of said error register and the output signal of said position gain control circuit;
a register for receiving the output signal of said position gain multiplier;
a digital-analog converter for receiving the output signal of said register; and
a speed control device for receiving the output signal of said digital-analog converter and supplying signals to the corresponding motor;
wherein the multiplication factor of said position gain multiplier is increased when said motor is stopped or gets ready to be stopped and an error value held in said error register becomes higher than a predetermined value.

4,374,350
CONTROL SYSTEM FOR STOPPING SPINDLE AT PREDETERMINED ROTATIONAL POSITION
Yoshinori Kohzai; Yoshiki Fujioka, and Naoto Ota, all of Hino, Japan, assignors to Fujitsu Fanuc Limited, Tokyo, Japan
Filed Dec. 15, 1980, Ser. No. 216,836
Claims priority, application Japan, Dec. 31, 1979, 54-172681
Int. Cl.³ G05B *11/18*
U.S. Cl. 318—590 **15 Claims**

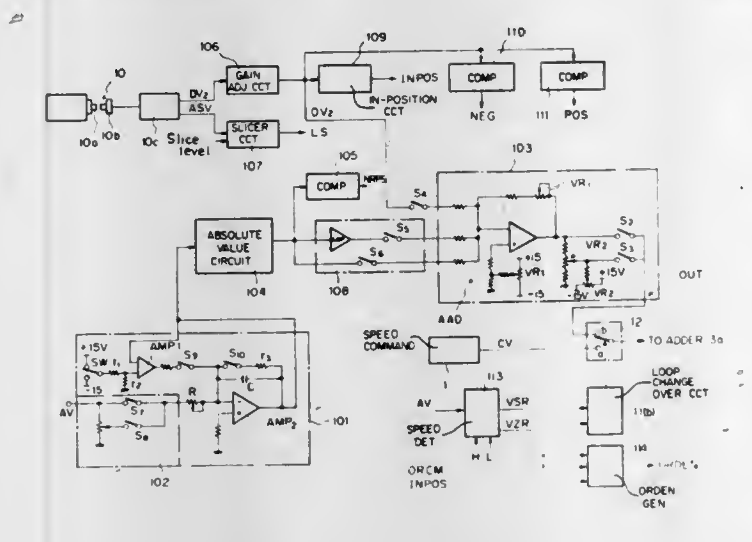

1. A control system for stopping a spindle at a predetermined rotational position, for driving a spindle with a spindle motor through a speed change mechanism, having a speed change ratio, in such a manner that a positional deviation between a present rotational position of a specified point on the spindle and the predetermined rotational position at which the specified point is to be stopped, is reduced to zero, thereby stopping the specified point on the spindle at the predetermined rotational position, said control system comprising means, operatively connected to the spindle and to the spindle motor, for generating a positioning gain by dividing the speed of the spindle motor by an amount of spindle motor rotation which depends upon the positional deviation of the spindle, said positioning gain being generated so as to remain substantially constant regardless of the speed change ratio established between the spindle motor and the spindle by said speed change mechanism, thereby stopping the specified point on the spindle at the predetermined rotational position.

4,374,351
DIGITAL DRIVE UNIT REGULATOR
Walter Fishman, Hatfield, and Theron W. Jenkins, Jr., Ambler, both of Pa., assignors to Leeds & Northrup Company, North Wales, Pa.
Filed Dec. 9, 1980, Ser. No. 214,617
Claims priority, application United Kingdom, Jan. 9, 1980, 8000626
Int. Cl.³ G05B *19/26*
U.S. Cl. 318—600 **6 Claims**

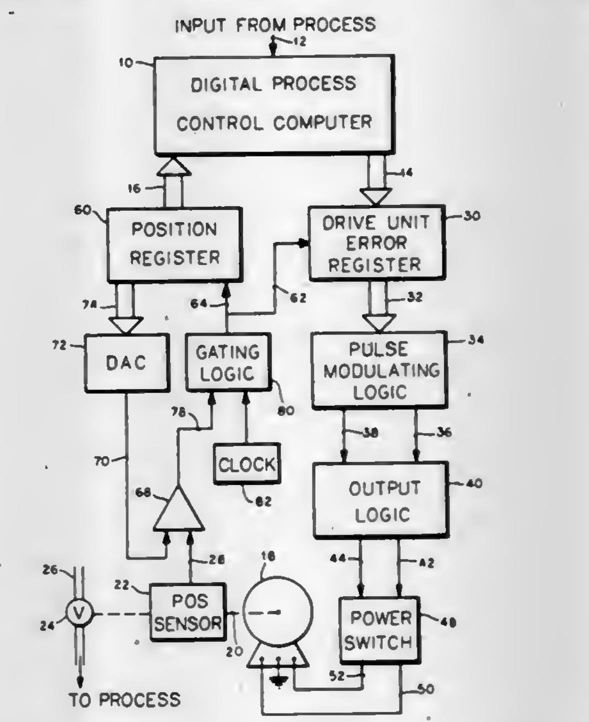

1. Apparatus for controlling the position of an electric drive unit in response to periodically produced digital control signals indicative of the position change required for the drive unit during the period, comprising:
a first register for receiving said digital control signal and changing the magnitude of its stored value accordingly;
means for supplying power to said drive unit in an amount proportional to said stored value so as to move said drive unit in a direction and by an amount corresponding respectively to the sign and magnitude of said stored value;
a second register for storing a value indicative of the position of said drive unit;
a digital to analog converter for producing from the contents of said second register an analog signal representing the existing position of said drive unit;
means for producing an analog signal representing the actual position of said drive unit;
a clock source;
gating means operable to gate clock signals from said clock source to said first and second registers to step said first and second registers as necessary to update their contents;
a comparator for comparing said analog signal from said converter with said actual position signal, said comparator being connected with said gate means to cause said gate means to step said registers until said converter signal and said actual position signal are equal.

4,374,352
AC INDUCTION MOTOR BRAKING SYSTEM
Douglas G. Webster, Saratoga, Calif., assignor to Veeco/Macronetics Inc., Sunnyvale, Calif.
Filed Jul. 21, 1981, Ser. No. 285,588
Int. Cl.³ H02P *3/24*
U.S. Cl. 318—762 **3 Claims**

1. An electronic braking system for an AC induction motor comprising:
(a) first means connected across the windings of said motor, said first means including a first diode connected in series with a first capacitor, said first capacitor storing energy

derived from the AC voltage applied to the windings of said motor;

(b) second means connected across the windings of said motor, said second means including a second resistor connected in parallel with a second capacitor, said second capacitor sensing when the applied AC voltage is removed from the windings of said motor;

(c) third means connected across said first diode, said third means including controllable unidirectional electronic switching means operable between a non-conducting state and a conductive state and oriented to permit current to flow in a direction opposite to the direction of current flow in said first diode; and

(d) fourth means operatively connected to said second capacitor for selectively controlling the switching of said controllable unidirectional electronic switching means from the non-conducting state to the conducting state, said fourth means including transistor switching means

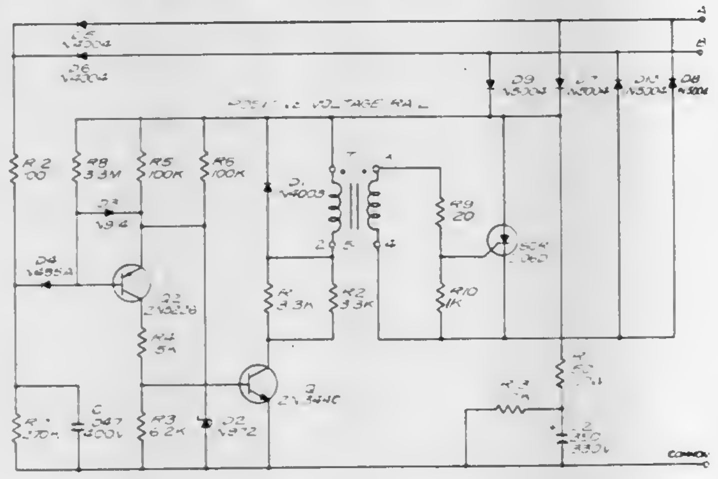

operable between an off state and an on state and pulse transformer means, said transistor switching means operatively connected and responsive to the voltage across said second capacitor and switching from the off state to the on state in response to the removal of the AC voltage applied to the windings of said motor, said pulse transformer means operatively connected to said first capacitor, to said transistor switching means, and to said controllable unidirectional electronic switching means, said pulse transformer means providing in response to the switching of said transistor switching means from the off state to the on state a control signal to said controllable unidirectional electronic switching means causing said controllable unidirectional electronic switching means to switch from the non-conducting state to the conducting state, said controllable unidirectional electronic switching means in the conducting state providing a path for the energy stored in said first capacitor to be transferred to the windings of said motor and to effect eddy-current braking of said motor.

4,374,353

MULTIPLE SPEED CONTROL MEANS FOR A VARIABLE SPEED MOTOR SYSTEM

Victor J. Habisohn, 1075 Englewood Rd., Hoffman Estates, Ill. 60195

Continuation-in-part of Ser. No. 787,348, Apr. 14, 1977, Pat. No. 4,207,508. This application Jun. 10, 1980, Ser. No. 158,166

Int. Cl.³ H02P *5/40*

U.S. Cl. 318—799 4 Claims

1. A hoist control system for moving a load from one position to another position, comprising:

an alternating current ("AC") power source;

a motor means for driving said load;

a static switching network having an input and an output, the output of said network being connected to the motor means;

a power switch means interposed between the AC power source and the input of the static switching network for connecting the AC power source thereto;

a mechanical switch member having a plurality of fixed positions and a variable low speed position;

a voltage level selector means including means for detecting AC voltage and converting to a DC signal corresponding to the selected fixed speed of the motor and including means for providing variable DC signals corresponding to

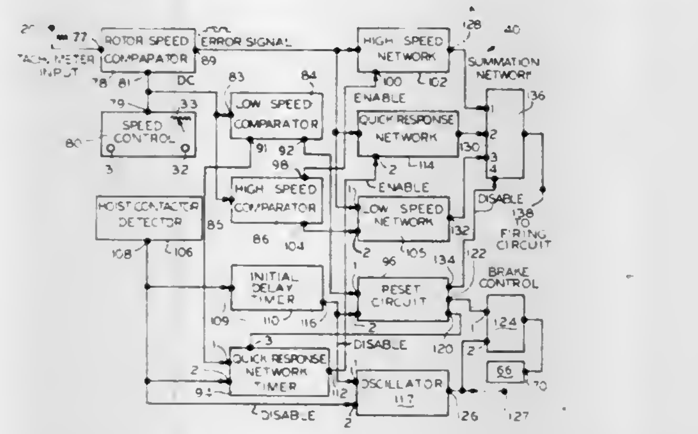

incremental variations of the low speed of the motor, said voltage level selector means providing said fixed speed signal when the switch means is in any one of said fixed positions and providing said DC signal corresponding to said incremental variations when said switch member is in the variable low speed position, and said voltage selector being inhibited from providing said low speed DC signals when the switch member is in any of said fixed positions.

4,374,354

RECHARGEABLE ELECTRIC PORTABLE APPLIANCE

John E. Petrovic, and John Trenary, both of Ft. Collins, Colo., assignors to Teledyne Industries, Inc., Ft. Collins, Colo.

Filed Jun. 23, 1981, Ser. No. 276,507

Int. Cl.³ H02J *7/00*

U.S. Cl. 320—2 12 Claims

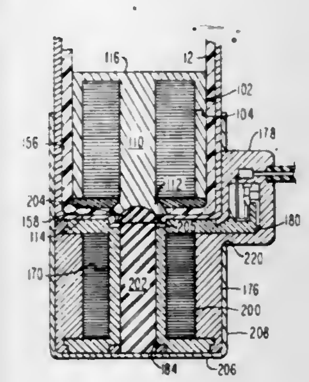

1. A portable appliance comprising:

a housing of said appliance that contains electrically powered apparatus, a battery for energizing said apparatus and a secondary coil of electrically-conductive winding that is coupled to translate magnetically-induced energy to said battery;

an elongated core of magnetically-permeable material disposed within said secondary coil;

a base that defines a well for supporting the portion of said housing within which said secondary coil is positioned and which includes a primary coil of electrically-conductive winding that is responsive to applied power for magnetically inducing energy into said secondary coil;

an elongated stud of magnetically-permeable material disposed within said primary coil, said stud being aligned axially with said core and having an end portion adjacent to an end portion of said core, one of said end portions being generally cup shaped and the other of said end portions being formed and relatively oriented to nest within said one end portion.

4,374,355

ELECTRICALLY ISOLATED BATTERY CHARGER FOR ON-BOARD ELECTRIC VEHICLE APPLICATIONS

Robert L. Steigerwald, Scotia, and John N. Park, Rexford, both of N.Y., assignors to General Electric Company, Schenectady, N.Y.

Filed Mar. 2, 1981, Ser. No. 239,725

Int. Cl.³ H02J *7/10*

U.S. Cl. 320—43 1 Claim

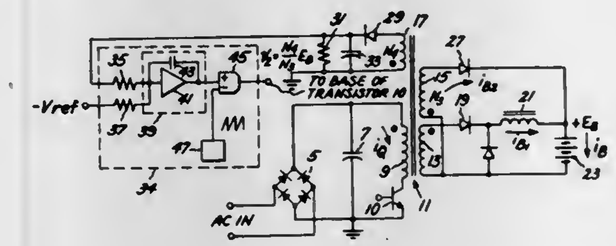

1. An electrically isolated battery charger comprising:

rectifier means adapted to be connected to an external AC supply;

a four winding transformer having a primary winding, two secondary windings and a signal winding;

controllable switch means connected between said rectifier means and said primary winding for cyclically interrupting the power delivered to said primary winding;

a choke;

a first diode connected in series with one of said secondaries, said choke and a battery to be charged, said first diode poled so that power is delivered to the choke and the battery when said controllable switch means is on, and when said controllable switch means is off energy stored in said choke is delivered to the battery;

a second diode connected in series with the other of said secondaries and the battery to be charged said second diode poled so that energy stored in said transformer core and airgap is delivered to the battery when said controllable switch means is off and no energy is delivered by said other secondary when said controllable switch means is on;

battery peak detector means coupled to said signal winding for obtaining a signal proportional to the battery voltage while said battery is being charged and said controllable switch is off; and

battery charge rate regulator means coupled to the output of said battery peak detector means for controlling the duty cycle of said controllable switch means to control battery charging.

4,374,356

CONSTANT VOLTAGE CIRCUIT

Masaru Hashimoto, Ayase, Japan, assignor to Tokyo Shibaura Denki Kabushiki Kaisha, Kawasaka, Japan

Continuation-in-part of Ser. No. 284,671, Jul. 20, 1981, abandoned, which is a continuation of Ser. No. 68,401, Aug. 21, 1979, abandoned. This application Aug. 31, 1981, Ser. No. 298,104

Claims priority, application Japan, Sep. 4, 1978, 53-108326

Int. Cl.³ G05F *1/56*

U.S. Cl. 323—273 6 Claims

5. A constant-voltage circuit comprising:

first and second input terminals for supplying an input voltage;

first and second output terminals for outputting a constant voltage;

a first transistor having a base, a collector connected to the first input terminal, and an emitter connected to the first output terminal;

a second transistor having a base, and collector and emitter connected between the base of the first transistor and the second input terminal;

means for applying a current in response to the input voltage to a connecting point of the first and second transistors;

a current mirror circuit comprising,

a series circuit including at least a resistive means and a PN junction means connected in series across the first input terminal and the first output terminal to form a first current path therebetween;

a third transistor having a base connected to the interconnection between the resistive means and the PN junction means of said first current path, and emitter and collector

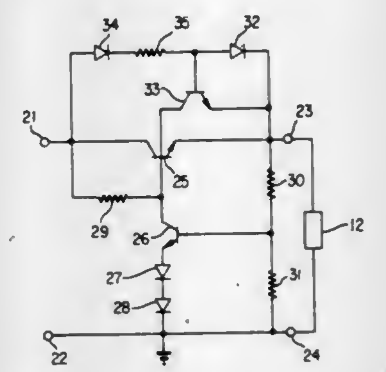

terminals connected between the connection point of said first and second transistors and said first output terminal to form a second current path which is also connected to the said applying means, and

said PN junction means of said first current path connected across the base and emitter of said third transistor;

output sensing means connected to said output terminals for applying a signal in response to the voltage across said output terminals to the base of said second transistor,

whereby an output voltage across said first and second output terminals is stabilized in relation to variation of an input voltage across said first and second input terminals.

4,374,357

SWITCHED CAPACITOR PRECISION CURRENT SOURCE

Andrew Olesin; Kevin K. L. Luke, both of Austin, and Robert D. Lee, Denton, all of Tex., assignors to Motorola, Inc., Schaumburg, Ill.

Filed Jul. 27, 1981, Ser. No. 286,446

Int. Cl.³ G05F *1/46*

U.S. Cl. 323—351 11 Claims

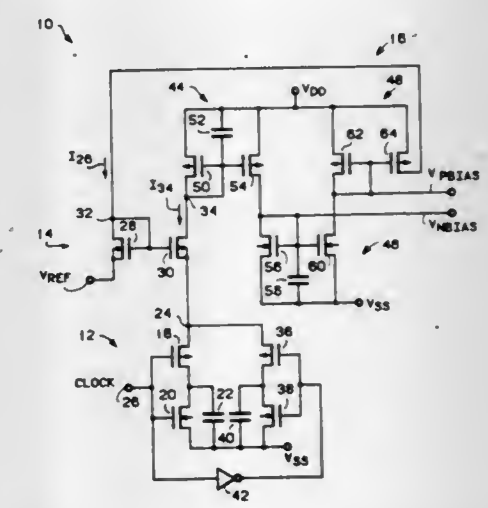

1. A switched capacitor precision current source for providing a precision current via an output node, comprising:

capacitance means for storing charge;

current means for receiving a first reference voltage and for sourcing current from the output node to a charge node so long as the voltage on the charge node is less than a sec-

ond reference voltage which is proportional to the first reference voltage;

charging means for charging the capacitance means from the charge node during a charge period; and

discharging means for discharging the capacitance means during a discharge period.

4,374,358

APPARATUS FOR MEASURING THE OSCILLATION FREQUENCY OF A VOLTAGE CONTROLLED OSCILLATOR

Masaaki Hirose, Gyoda, Japan, assignor to Takeda Riken Kogyo Kabushiki Kaisha, Tokyo, Japan

Filed Jan. 5, 1981, Ser. No. 222,663

Claims priority, application Japan, Jan. 9, 1980, 55-1478

Int. Cl.³ G01R *23/02*

U.S. Cl. 324—78 D **9 Claims**

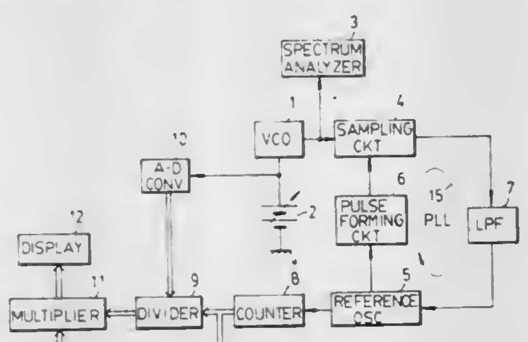

1. Apparatus for measuring the oscillation frequency of a voltage controlled oscillator controlled by a control voltage, comprising:

a reference oscillator having an oscillation frequency lower than the oscillation frequency of the voltage controlled oscillator to be measured;

a phase lock loop, operatively connected to the outputs from the voltage controlled oscillator and the reference oscillator, for controlling one of the voltage controlled oscillator and said reference oscillator so that the difference between the oscillation frequency of the voltage controlled oscillator and a value N (where N is an integer) times the oscillation frequency of said reference oscillator is a predetermined value;

a counter, operatively connected to said reference oscillator, for counting the oscillation frequency of the reference oscillator;

approximate frequency detecting means, operatively connected to the voltage controlled oscillator, for detecting an approximate oscillation frequency approximately corresponding to the control voltage for setting the oscillation frequency of the voltage controlled oscillator;

dividing means, operatively connected to said counter and said approximate frequency detecting means, for dividing the approximate oscillation frequency by the count value of said counter and for determining the value N from the result of the division; and

calculating means, operatively connected to said dividing means and said counter, for obtaining the oscillation frequency of the voltage controlled oscillator, said calculating means including means for multiplying the value N obtained from said dividing means by the count value of the counter.

4,374,359

SYSTEM AND METHOD OF SENSING CURRENT IN HIGH VOLTAGE TRANSMISSION LINES UTILIZING THE TRANSMISSION OF DIGITAL INFORMATION BY OPTICAL FIBERS

Gilles Missout, Quebec, Canada, assignor to IREQ—Institut de Recherche de l'Hydro-Quebec, Quebec, Canada

Filed Oct. 4, 1979, Ser. No. 82,223

Int. Cl.³ G01R *19/00, 15/04*

U.S. Cl. 324—96 **17 Claims**

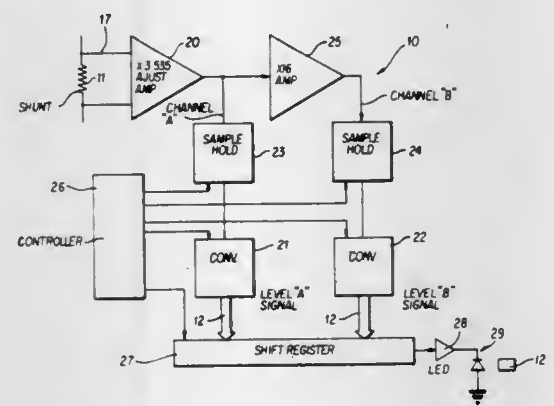

1. A system for sensing and measuring current on a high voltage transmission line comprising an input shunt element connected to said transmission line for sensing a current flowing therethrough, a transmitter circuit for transmitting a signal representative of said current passing through said shunt element, said transmitter having converter means for producing a composite output digital coded signal representative of the value of said measured current, a light transmitting output means for transmission of said coded signal on an optical fiber transmission line to a receiver circuit having decoding circuit means for decoding and reconstituting said coded signal to a usable form to determine said value of said measured current, said shunt element having a resistive conducting core with an internal chamber, said transmitter circuit being contained within said internal chamber to shield its circuitry from electric and magnetic fields produced by said current flowing through said conducting core around said transmitter circuit.

4,374,360

NMR DIAGNOSIS APPARATUS

Raimo E. Sepponen, Pitkänsillanranta 7-9 C 111, 00530 Helsinki 53, Finland

Filed May 29, 1980, Ser. No. 154,595

Int. Cl.³ G01N *27/00*

U.S. Cl. 324—309 **9 Claims**

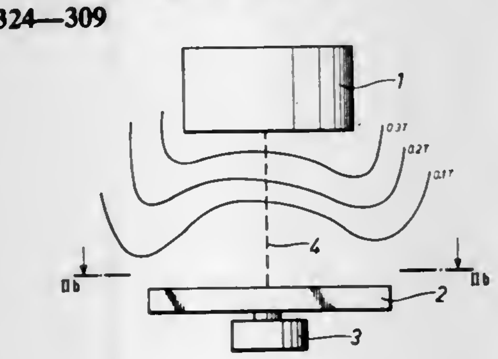

1. Nuclear magnetic resonance diagnosis apparatus for creating a magnetic field at the object of examination and having a transmitter for transmitting a high-frequency electro-magnetic radiation to the object under examination and a receiver for reception of the NMR signal emitted by the object irradiated in the magnetic field and transmission of said signal to means for processing and analyzing the signal, comprising first and second means for producing the magnetic field, said first means including a magnetic field generating means to produce an inhomogeneous magnetic field, and said second means including a mechanically movable member located in said magnetic field and a power means to move said member relative to said first member continuously, said movable member being constructed and arranged to modify the strength of said inhomogeneous magnetic field except for a sampling line (4) defining a concentrated elongated volume extending through the object and passing through a sampling point, and extending through said field whereby a constant field strength of a given intensity operable in NMR diagnosis is thereby created within a small, locally circumscribed region, which is accurately pinpointable.

4,374,361

CLOCK FAILURE MONITOR CIRCUIT EMPLOYING COUNTER PAIR TO INDICATE CLOCK FAILURE WITHIN TWO PULSES

James R. Holden, Chicago, Ill., assignor to GTE Automatic Electric Labs Inc., Northlake, Ill.

Filed Dec. 29, 1980, Ser. No. 220,933

Int. Cl.³ H03K *13/32, 17/296*

U.S. Cl. 328—120 **8 Claims**

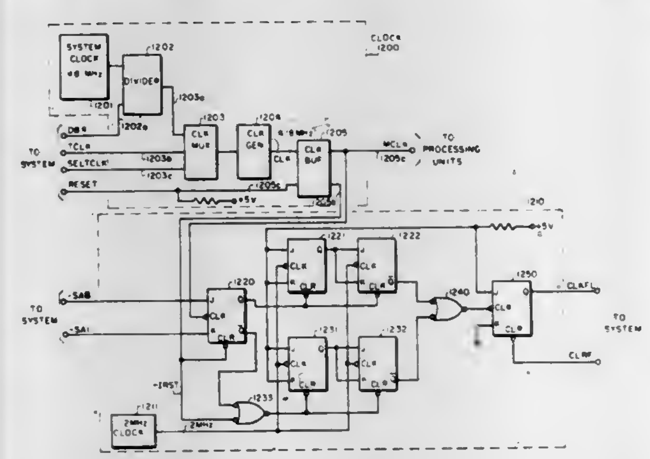

1. A pulse monitor circuit for use in a switching system, said pulse monitor comprising:

a first source of periodic pulses;

a second source of periodic pulses;

input storage means connected to said first pulse source, operated in response to each of a first group of alternately occurring pulses from said first pulse source to generate a first clear signal, said input storage means further operated in response to each of a second group of alternately occurring pulses from said first pulse source to generate a second clear signal;

a first counter circuit connected to said input storage means and said second pulse source, operated in response to an absence of said first clear signal to count pulses from said second pulse source;

a second counter circuit connected to said input storage means and said second pulse source, operated in response to an absence of said second clear signal to count pulses from said second pulse source; and

output storage means connected to said first and second counter circuits, operated in response to a predetermined count from said first or second counter circuits to generate a pulse failure signal.

4,374,362

INSTRUMENT ZEROING CIRCUIT

George K. Sutherland, White Bear Lake, and Thomas J. Thielen, Minneapolis, both of Minn., assignors to Sys-Tec, Inc., New Brighton, Minn.

Filed Feb. 17, 1981, Ser. No. 235,151

Int. Cl.³ H03L *1/00*

U.S. Cl. 328—162 **4 Claims**

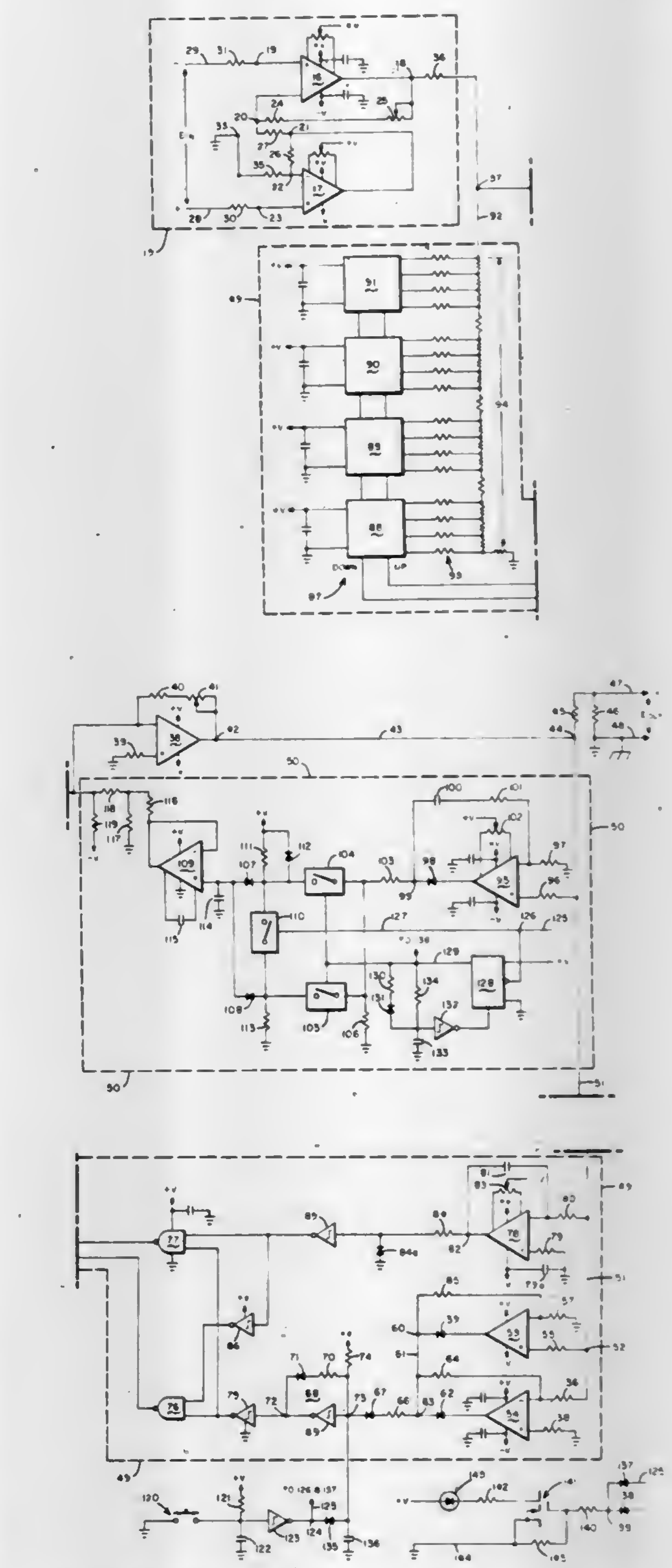

1. Electronic apparatus for removing a direct current bias level from a composite input signal of the type having a time varying component superimposed on said direct current bias level, comprising:

(a) input means for receiving said composite input signal;

(b) summing amplifier means having an input terminal and an output terminal, said input terminal being coupled to said input means and first and second negative feedback loops adapted to be selectively coupled from said output terminal of said summing amplifier means to said input terminal thereof;

(c) said first feedback loop including means for generating a digital number proportional to the deviation of said output signal of said summing amplifier means from a zero voltage reference value, means for converting said digital number to an analog voltage, and means coupling said analog voltage to said input terminal of said summing amplifier;

(d) said second negative feedback loop including means for sampling the output from said summing amplifier means and for holding a voltage value proportional to the deviation of said output signal from said summing amplifier from a predetermined reference for a predetermined time

and applying said voltage value to said input terminal of said summing amplifier; and

(e) control means for effectively connecting said first feedback loop in circuit with said summing amplifier for a first predetermined time and for subsequently disconnecting said first feedback loop while coupling said second feedback loop in circuit with said summing amplifier for a second predetermined time.

4,374,363

BALANCED IMPEDANCE COUPLER

Frank R. Previti, 550 Winchester Rd., Warminster, Pa. 18974

Filed Nov. 3, 1980, Ser. No. 203,197

Int. Cl.³ H03F *3/26*

U.S. Cl. 330—263 **6 Claims**

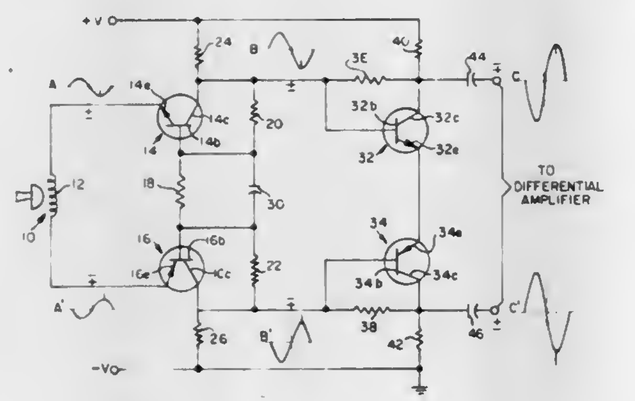

1. A circuit for coupling a two-terminal signal source of low impedance to a differential processor having a two-terminal input of higher impedance, comprising:

a first pair of complementary bipolar transistors arranged in a common-base configuration having a balanced input directly across the respective emitters of said transistors and a balanced output across the respective collectors.

4,374,364

DARLINGTON AMPLIFIER WITH EXCESS-CURRENT PROTECTION

Jacques Hemery, Caen, and Bernard P. Roger, Carpiquet, both of France, assignors to U.S. Philips Corporation, New York, N.Y.

Filed Sep. 29, 1980, Ser. No. 192,125

Claims priority, application France, Oct. 22, 1979, 79 26168

Int. Cl.³ H02H *7/20*

U.S. Cl. 330—298 **12 Claims**

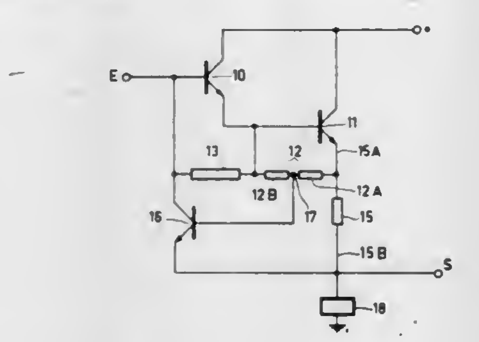

1. An amplifier device comprising a first transistor coupled directly to a second transistor, the arrangement so that said two transistors form a DARLINGTON amplifier, a first resistor connected in parallel with the base-emitter path of the second transistor, a second resistor connected in series in the emitter circuit of the second transistor and having a first end connected to said emitter of the second transistor and to one end of said first resistor, a third transistor having a collector connected to the base of the first transistor and an emitter connected to a second end of the second resistor, and means connecting the base of said third transistor to a tapping on said first resistor.

4,374,365

METHOD AND APPARATUS FOR PRODUCING 360 DEGREE RADIATION WITH STATIC COMPONENTS

James J. Kiley, 2066 Partridge La., Binghamton, N.Y. 13903

Filed Jun. 11, 1979, Ser. No. 47,284

Int. Cl.³ H01S *3/03*

U.S. Cl. 372—92 **9 Claims**

1. A laser device comprising:

(a) an active gas medium within a resonant cavity bounded by two opposed spaced, concentric, cylindrical surfaces and two spaced, parallel, planar surfaces perpendicular to the common axis of said cylindrical surfaces;

(b) both of said cylindrical surfaces being highly reflective with respect to the wavelength of radiation produced by excitation of said active gas medium, one being more highly reflective than the other;

(c) said cylindrical surfaces being spaced by a radial distance substantially equal to an integral number of half wavelengths of said radiation; and

(d) pump means for applying an electrical field to said active gas medium to excite the latter to a level sufficient to produce lasing.

4,374,366

INTEGRATED HORIZONTAL OSCILLATOR EMPLOYING AN ON-CHIP CAPACITOR FOR USE IN A TELEVISION RECEIVER

Michael McGinn, Tempe, Ariz., assignor to Motorola, Inc., Schaumburg, Ill.

Filed Dec. 29, 1980, Ser. No. 220,606

Int. Cl.³ H03K *4/50*

U.S. Cl. 331—111 **9 Claims**

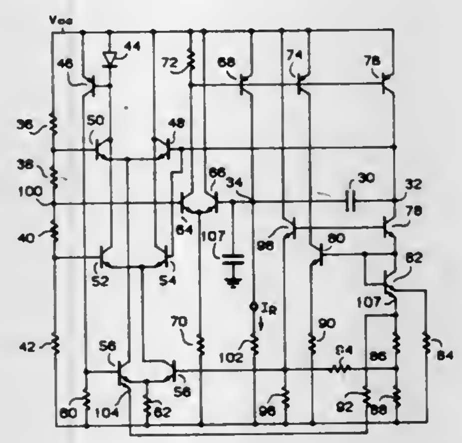

1. A horizontal oscillator for use in a television receiver, comprising:

a reference amplifier for generating a reference voltage;

a capacitor having a first terminal coupled to said reference voltage and a second terminal coupled to an output node;

first circuit means coupled to said reference amplifier for generating a referenced current;

second circuit means coupled to said output node for supplying a first current to said capacitor to charge said capacitor in a first mode of operation and for pulling a second current from said capacitor in a second mode of operation, said first and second currents being substantially smaller than said reference current, said second circuit means including a first current mirror circuit coupled to said reference amplifier, to said first circuit means and to said output node for supplying said first current, and a second variable gain current mirror circuit coupled to said output node for pulling said second current;

comparison means coupled to said output node for detecting when the voltage across said capacitor has increased to a first potential and has decreased to a second potential; and

third circuit means coupled to said second circuit means and to said comparison means for placing said second circuit means in said first mode when the voltage across said capacitor has decreased to said second potential and for placing said second circuit means in said second mode when the voltage across said capacitor has increased to said first potential.

4,374,367

NON-RECIPROCAL MICROWAVE-FREQUENCY DEVICE FOR HIGH-LEVEL OPERATION

Gerard Forterre, Paris, France, assignor to Thomson-CSF, Paris, France

Filed Dec. 9, 1980, Ser. No. 214,659

Claims priority, application France, Dec. 28, 1979, 79 31975

Int. Cl.³ H01P *1/19*

U.S. Cl. 333—24.1 **3 Claims**

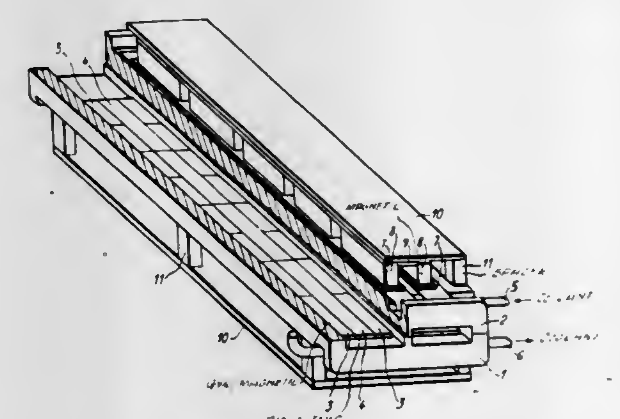

1. A non-reciprocal phase-shifter operating within the microwave-frequency range at a high mean power level and comprising:

at least one rectangular-section waveguide;

at least four longitudinal members of gyromagnetic material mounted within the waveguide and arranged symmetrically in pairs on each of the large walls of the waveguide;

a magnetic circuit for producing magnetizing fields in opposite directions parallel to the small walls of the waveguide within an internal space which includes said four members of gyromagnetic material, each member of gyromagnetic material being constituted by a first array of small parallelepipedal gyromagnetic plates which have the same thickness as well as the same width and the longitudinal axes of which coincide, said gyromagnetic plates being bonded to the waveguide walls by an insulating silicon adhesive, two members of gyromagnetic material located on one and the same wall of the waveguide being placed on each side of at least one member of dielectric material centered on the mid-plane of the waveguide, said dielectric member being constituted by a second array of small parallelepipedal dielectric plates having the same width and a thickness equal to the thickness of said small gyromagnetic plates, the small dielectric plates being so arranged that their longitudinal axes coincide, said dielectric plates being bonded to the waveguide walls and to said gyromagnetic plates by an insulating silicone adhesive.

4,374,368

MULTILEVEL STRIPLINE TRANSITION

Raymond D. Viola, Oyster Bay, and Gerard L. Hanley, Melville, both of N.Y., assignors to Sperry Corporation, New York, N.Y.

Filed Dec. 29, 1980, Ser. No. 220,226

Int. Cl.³ H01P *5/12*

U.S. Cl. 333—128 **2 Claims**

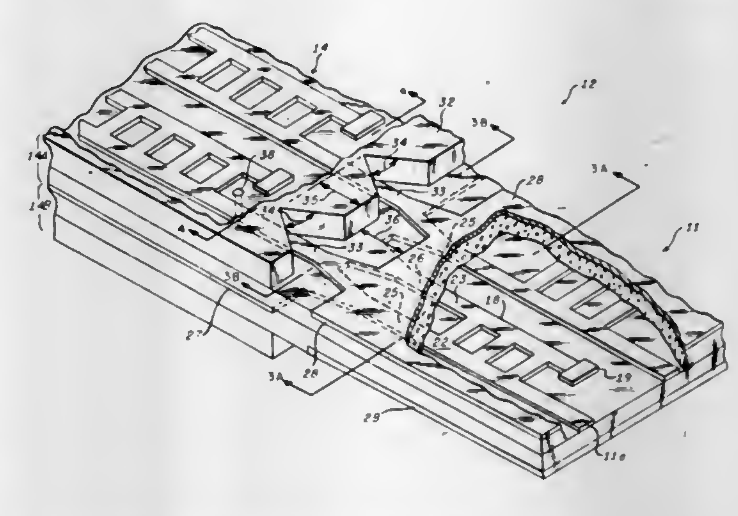

1. A stripline transformer comprising:

an input section having first and second ground planes and a multiplicity of inner conductors therebetween;

first and second stripline decks having a common ground plane therebetween each with a ground plane substantially parallel to said common ground plane positioned a predetermined distance therefrom and each with inner conductors positioned between said common ground plane and said substantially parallel ground plane;

first and second microstrip sections coupled between said input section and said first and second stripline decks respectively, each having conductors a predetermined distance from a ground plane extending from said common ground plane, said conductors of said first microstrip section coupled between said inner conductors of said first stripline deck and said first ground plane of said input section, said conductors of said second microstrip section coupled between said inner conductors of said second stripline deck and said second ground plane of said input section, and said ground plane extending from said common ground plane coupled to said inner conductors of said input section, thereby providing a transformation from one stripline to two striplines arranged in a double deck configuration.

4,374,369

ELECTROMAGNETIC INTERFERENCE ELIMINATION FILTER

Yukio Sakamoto; Tetsuo Tanaka; Masaaki Kuboto, and Masami Sugitani, all of Takefu, Japan, assignors to Murata Manufacturing Co., Ltd., Japan

Filed Dec. 16, 1980, Ser. No. 216,942

Claims priority, application Japan, Dec. 20, 1979, 54-177509[U]; Dec. 28, 1979, 54-184306[U]; Dec. 29, 1979, 54-181679[U]

Int. Cl.³ H03H *7/01, 1/00*

U.S. Cl. 333—182 **4 Claims**

1. An electromagnetic interference supression filter, comprising:

(A) grounding means comprising a metal plate having a plurality of holes formed therein, said holes in said metal plate being disposed in first and second rows, each said hole of said first row being aligned with and adjacent to a respective said hole of said second row to form a hole pair;

(B) a plurality of filter units equal in number to the number of hole pairs, each of said filter units comprising:

(1) a generally U-shaped penetration shaft having a central

part and having two legs extending from said central part generally parallel to each other;

(2) first and second capacitors each having a through hole formed therein, said through hole of each said capacitor receiving a respective portion of said penetration shaft; each said capacitor having a respective first electrode and a respective second electrode, said first electrode of each said capacitor being in electrical contact with the respective said portion of said penetration shaft which is received in said through hole of the respective said capacitor, said second electrode of each said capacitor being in electrical contact with said grounding means; and

(3) induction means disposed in electrical contact with said penetration shaft at a location intermediate said first and second capacitors;

(C) one said leg of said penetration shaft of each said filter

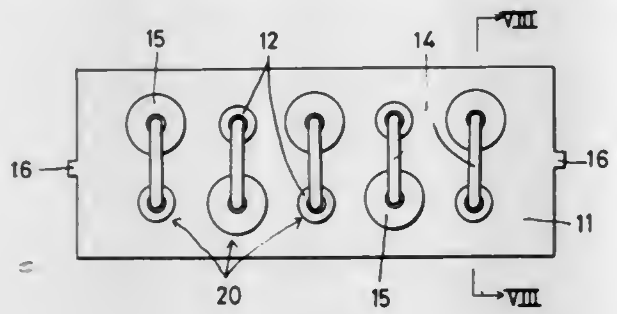

unit being received in a respective said hole in said first row and the other said leg of said penetration shaft of each said filter unit being received in the respective said adjacent hole of said second row;

(D) said induction means having a through hole formed therein and receiving in its said through hole one said leg of said penetration shaft of the respective said filter unit; each said filter unit being so oriented that every second filter unit has its respective said induction means located on a penetration shaft leg that is received in a hole in said first row and the remaining said filter units have their respective induction means located on a penetration shaft leg that is received in a hole in said second row; said holes in said metal plate being defined at such locations that the respective said induction means of said plurality of filter units are sufficiently spaced from each other to prevent the occurrence of any substantial inductive coupling between them.

4,374,370
HELICAL RESONATOR FILTER
George N. Popovski, Weston, and Peter Vizmuller, Thornhill, both of Canada, assignors to Motorola, Inc., Schaumburg, Ill.
Filed Mar. 30, 1981, Ser. No. 248,753
Int. Cl.³ H01P *1/20, 7/00*
U.S. Cl. 333—202 **6 Claims**

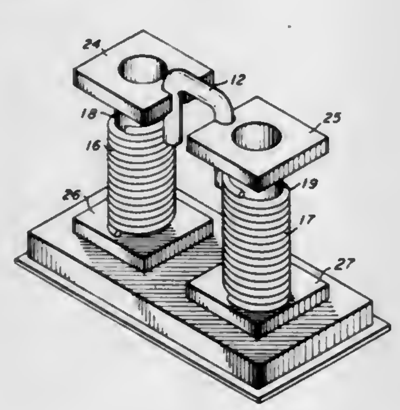

1. A helical resonator filter comprising:
a first helical coil having first and second ends and being made of a conductive wire, said first end being electrically grounded;
a second helical coil having first and second ends and being made of a conductive wire, said first end being electrically grounded;
an electrical shielding chamber in which said first and said second helical coils are disposed adjacent each other, whereby said helical coils are electromagnetically coupled to each other so that said chamber and coils enable the filter to have a given bandwidth; and
a coupling element comprised of an electrically conductive material and being placed substantially between the second end of said first helical coil and the second end of said second helical coil for modifying the bandwidth of the filter, said coupling element further being electrically isolated from said first and second coils and the electrical shielding chamber.

4,374,371
CADMIUM ELECTRIC FUSE
Vojislav Narancic, Montreal, Canada, assignor to Kearney-National, Inc., Atlanta, Ga.
Filed Jan. 17, 1980, Ser. No. 112,733
Int. Cl.³ H01H *85/04*
U.S. Cl. 337—159 **2 Claims**

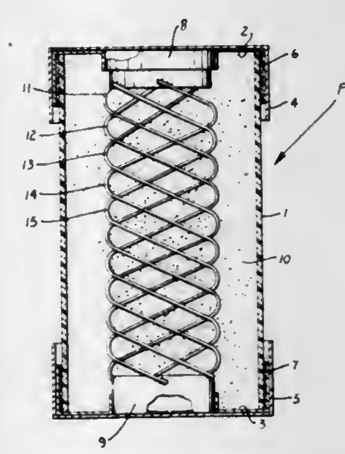

1. An electric general purpose current limiting fuse for use in circuits of at least 1000 volts, said fuse comprising a tubular housing of insulating material constructed to withstand the circuit recovery voltage following a circuit interruption by the fuse, a terminal cap mounted on each end of said tubular housing and constituting closure elements thereof, quartz sand of substantially spherical grains of random size formed is excess of 99% purity and disposed within and substantially filling said housing, a plurality of substantially homogeneous helical fusible elements formed of cadmium of 95% to 99.999% purity embedded in and supported by said quartz sand and having their ends connected with said terminal elements respectively to form a plurality of parallel conducting paths therebetween, said fusible elements being effective to melt and to interrupt currents many times the rated current of the fuse with a high degree of current limitation and each of said fusible elements being heated throughout substantially the entire length thereof to a temperature approximating the melting temperature thereof and substantially below the boiling temperature thereof by currents of low magnitude and slightly in excess of normal rated current, said fusible elements being arranged to melt in random sequence and arcs thereafter being established and extinguished in random sequence in said fusible elements via commutation action.

4,374,372
MODIFIED CONTACT STRIP MOUNTING MEANS FOR THERMOSTATIC SWITCHES
Omar R. Givler, North Canton, Ohio, assignor to Portage Electric Products, Inc., North Canton, Ohio
Filed Jun. 1, 1981, Ser. No. 269,312
Int. Cl.³ H01H *37/04*
U.S. Cl. 337—380 **8 Claims**

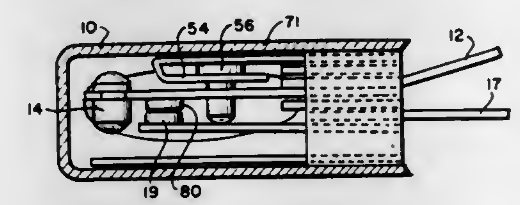

1. In a thermostatic switch having operating members including a bimetallic member, at least one contact arm, connector members, and contacts adapted to establish or disconnect an electrical circuit, all of the operating members being held within a case having an open end, said open end having a first dimension and a second dimension, the improvement which comprises an H-shaped cradle insulator block having side pieces shaped and sized so as to occupy, in a press fit, said first dimension of the open end of said case within which the operative members are inserted, and a cross piece connecting said side pieces, said cross piece being so sized, in combination with the thickness of said cross pieces, as to provide a press fit in said second dimension of the open end of said case, said cross piece providing an upper opening and a lower opening in said H-shaped cradle insulator block.

4,374,373
MULTIPLE CONTACTS, SNAP-ACTION, THERMAL SWITCH
Manfred Kurz, Ditzingen, Fed. Rep. of Germany, assignor to Behr-Thomson Dehnstoffregler GmbH, Kornwestheim, Fed. Rep. of Germany
Filed Feb. 27, 1981, Ser. No. 238,984
Claims priority, application Fed. Rep. of Germany, Feb. 27, 1980, 3007305
Int. Cl.³ H01H *37/46*
U.S. Cl. 337—383 **25 Claims**

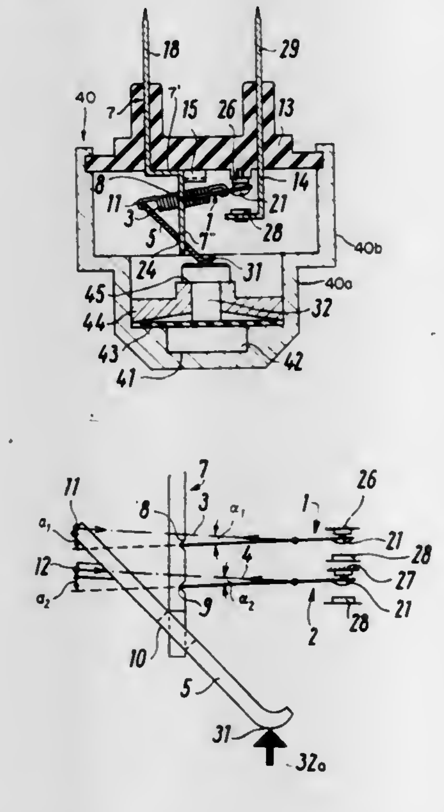

1. A snap-action thermal switch adapted to be operated by an expansion means the switch including a switch reed mounted so as to be pivotable about a pivot axis between at least two switching positions, a switch spring means for exerting force components in a longitudinal direction of a switch reed and in a pivoting direction of the switch reed, and an adjusting means adjustable by the expansion means, said switch spring means being arranged such that, after the expansion means attains a predetermined position, a force component of the switch spring means acting in a pivoting direction on the switch reed reverses direction with respect to the switch reed after the switch reed traverses a zero position, characterized in that at least one second switch reed is mounted so as to be pivotable about a second pivot axis between two switching positions, at least one second switch spring means exerts a first component on the second switch reed in a longitudinal direction and a force component in the pivoting direction of the second switch reed, the second spring means is arranged such that a force component of the second switch spring means acting in the pivoting direction of the second switch reed reverses direction with respect to the second switch reed in a second predetermined position of the expansion means, and in that the reed switches are supported at a mounting plate means so that the respective pivot axes are vertically offset.

4,374,374
ELECTRIC CONTACT DEVICE
Sven K. L. Goof, 236A Gl. Strandvej, DK-3050 Humlebaek, Denmark
Filed Apr. 15, 1981, Ser. No. 254,214
Claims priority, application Denmark, Apr. 17, 1980, 1635/80
Int. Cl.³ H01C *10/10*
U.S. Cl. 338—114 **8 Claims**

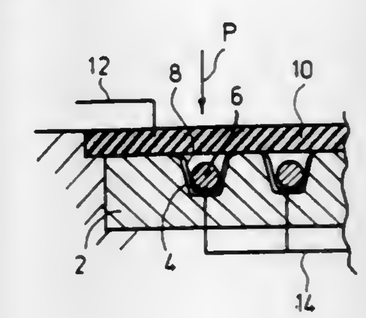

1. An electric contact device for operating and controlling electric units, such as an electric motor, said device comprising a base member, at least one electric conductor carried by and extending along a surface of said base member and defining a first contact member of the device, and an electrically conducting, resiliently deformable cover layer covering said conductor and defining a second contact member of the device, said first and second contact members being without electrical connection in a normal, passive state of the device, said electric conductor being recessed in a corresponding elongated indentation defined in said surface of the base member, said base member being relatively rigid in comparison with said cover layer so that said cover layer is resiliently deformable about confronting edges of said base member defining said indentation without deformation of said confronting edges, so as to be depressed into said indentation to establish electrical connection with said conductor therein, thereby closing a current flow path through the device.

4,374,375
PROBE MOUNT ASSEMBLY FOR BRAKE WEAR WARNING SYSTEMS
Aldo Allori, Brookfield; Ronald A. Koutsky, Lombard, and John A. Wilger, Chicago, all of Ill., assignors to International Harvester Co., Chicago, Ill.
Filed Apr. 13, 1981, Ser. No. 253,621
Int. Cl.^{3} B60R *25/10;* **G08B** *21/00*
U.S. Cl. 340—52 A **9 Claims**

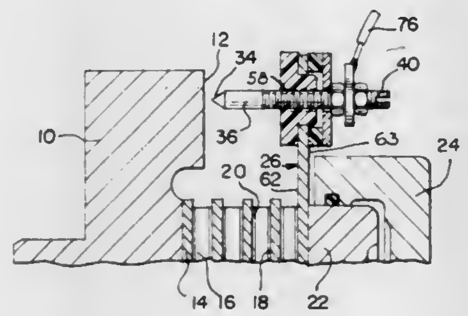

1. A probe mount assembly for supporting an adjustable contact probe of a pre-selected extension engageable with a ground member at a predetermined time to complete a warning signal electric circuit, the assembly comprising:
a tab plate supporting the assembly and movable with regard to said ground member;
said tab plate having an aperture;
said tab plate having inner and outer sides and said inner side facing the ground member;
bushing means threadably engageable with and holding said probe within said aperture and contiguous with said inner side;
a spacer slidably mounted on said bushing means and contiguous with said outer side;
said bushing means and said spacer electrically insulating said probe from said tab plate;
an electrical connector terminal detachably mounted on said probe and connected to said warning signal electrical circuit; and
locking means removably mounted on said probe for securing said assembly to said tab plate and facilitating an axial displacement of said probe;
said ground member being a disc brake housing, containing a set of frictionally engageable and alternatively spaced discs and friction plates;
said discs attached to and rotatable by a shaft;
said set being compressible by an associated brake piston to brake the rotational movement of said discs against said friction plates;
said probe being of a unitary construction and extending substantially outwardly from said bushing means and toward said ground member.

4,374,376
VEHICLE WARNING DEVICE
Harold E. Pillifant, Jr., 3522 W. Dunlap, #214, Phoenix, Ariz. 85021
Filed Jul. 6, 1981, Ser. No. 280,458
Int. Cl.^{3} B60Q *1/26;* **G09F** *15/00*
U.S. Cl. 340—84 **24 Claims**

1. A warning device for use with a disabled vehicle to warn approaching motorists of the presence of the disabled vehicle, said warning device comprising in combination:
a. a base;
b. a panel supported by said base and extending upwardly therefrom, said panel having warning indicia thereon, said warning indicia including a light source; and
c. flap means secured to said base and extendible downwardly therefrom for insertion between the opened hood or trunk of the disabled vehicle and the body of the vehicle in order to anchor said base of said warning device to

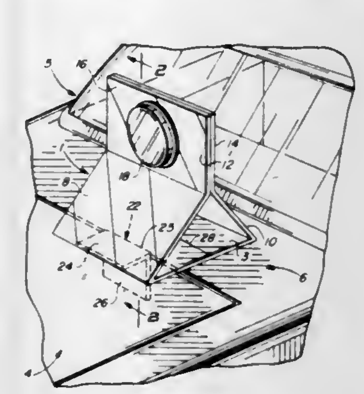

the disabled vehicle upon closure of the hood or trunk respectively.

4,374,377
PIEZOELECTRIC AUDIO TRANSDUCER
Nobuyuki Saito, and Hiroshi Saito, both of Itami, Japan, assignors to Sumitomo Electric Industries, Ltd., Osaka, Japan
Filed Dec. 10, 1980, Ser. No. 215,037
Claims priority, application Japan, Dec. 12, 1979, 54-171999[U]; Dec. 13, 1979, 54-172588
Int. Cl.^{3} G08B *3/00;* **H01L** *41/10*
U.S. Cl. 340—384 E **5 Claims**

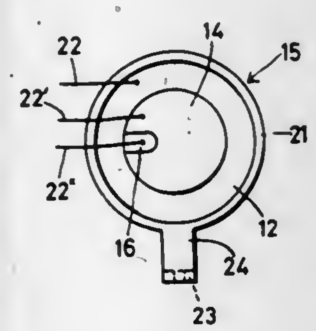

1. A three-terminal audio transducer, wherein the outer periphery of a vibrator, which comprises a piezoelectric element placed on a metallic diaphragm, is securely supported on an acoustic casing, and wherein an elastic part is arranged between said casing and a fixing part of said audio transducer so as to be fixed to a mounting body, and wherein said elastic part has sufficient elasticity to enable said vibrator and casing and elastic part to vibrate in a well balanced fashion.

4,374,378
SCANNING SEISMIC INTRUSION DETECTION METHOD AND APPARATUS
Robert D. Lee, San Mateo, Calif., assignor to The United States of America as represented by the United States National Aeronautics and Space Administration, Washington, D.C.
Filed Jan. 28, 1981, Ser. No. 229,231
Int. Cl.^{3} G08B *13/00*
U.S. Cl. 340—566 **2 Claims**

1. In a method of intrusion detection, the steps of:
multiplexing into a receiver at a central location individual signals developed by vibrations sensed by individual ones of a plurality of seismic sensors in an array disposed in a monitored region within which intrusion by surface movement or tunneling is to be detected to obtain a scan of the seismic sensors in the array;
automatically stopping the multiplexing scan on a first individual sensor having a received vibration signal exceeding a predetermined threshold value to indicate the location of an intrusion; and

sequentially selecting the received signal developed on second and third seismic sensors in the vicinity of said first

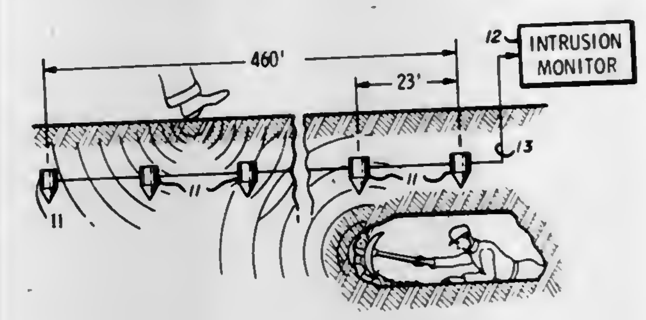

sensor to more precisely determine the location of the intrusion.

4,374,379
MOISTURE SENSING DEVICE FOR PIPES AND THE LIKE
Everett G. Dennison, Jr., 200 Glenview Rd., Canfield, Ohio 44406
Filed Aug. 25, 1980, Ser. No. 181,128
Int. Cl.^{3} G08B *21/00*
U.S. Cl. 340—604 **4 Claims**

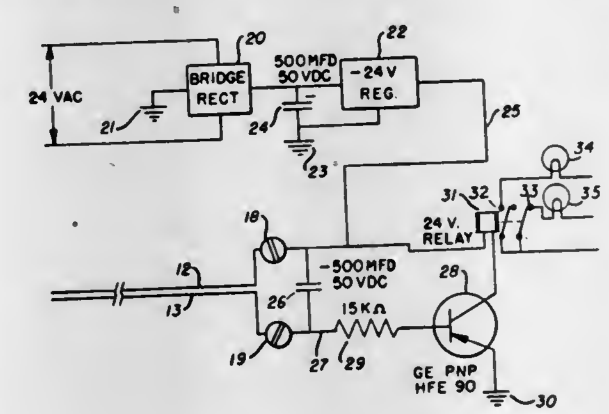

1. A device capable of detecting an extremely small drop of liquid associated with a leak from a pipe or the like comprising an alarm means, an elongated strip of insulating material having inner and outer faces, spaced longitudinally extending electrical conductors partially embedded in said strip, continuous portions of each of said conductors exposed on said outer face of said strip, said conductors being closely spaced to one another with a maximum spacing of about 3/64th of an inch therebetween so that extremely small particles of liquid can be detected, means on the inner face of said strip for mounting said strip to said pipe or the like, said electrical conductors connected with said alarm means, said alarm means arranged to initiate an alarm upon moisture bridging said electrical conductors.

4,374,380
AUTOMOTIVE ELECTRICAL NETWORK VOLTAGE REGULATION MONITORING CIRCUIT
Ulrich Giepen, Mundelsheim, and Friedhelm Meyer, Illingen, both of Fed. Rep. of Germany, assignors to Robert Bosch GmbH, Stuttgart, Fed. Rep. of Germany
Filed Dec. 4, 1979, Ser. No. 100,209
Claims priority, application Fed. Rep. of Germany, Jan. 27, 1979, 2903219
Int. Cl.^{3} G08B *21/00*
U.S. Cl. 340—660 **4 Claims**

1. In an automotive-type self-contained on-board vehicular electrical network having a storage battery (13);
a generator (10) having a field winding (W) and supplying d-c output at a terminal (B+) for supply of power to a load bus (14) to charge the storage battery connected to the terminal (B+);
and a voltage regulator (12) having a power semiconductor (T, T') connected to the output (D+) of the generator and controlling power flow to the field winding (W) and having means (15) responsive to the voltage level on the power bus of the system controlling conduction of said power semiconductor in cycles to maintain an average predetermined current flow through the field winding in accordance with power requirements placed on the load bus,
and comprising,
a monitoring circuit to supervise proper operation of the voltage regulator power semiconductor (T, T') comprising

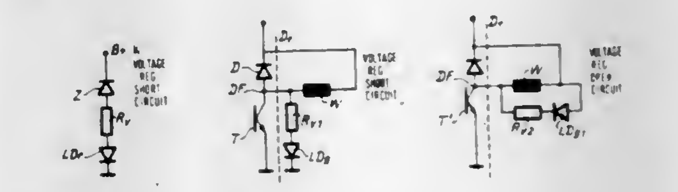

means sensing the electrical condition of the field winding (W) and including a light-emitting diode (LED), (LDr, LDg, LDg1) which, upon change of its illumination state, provides an output indication of the relation of the field winding with respect to the voltage thereacross, or with respect to a reference level;
wherein (FIG. 1) the electrical condition is the voltage across the load bus (14) and the sensing means comprises
a Zener diode (Z) in series with said LED (LDr) connected across the load bus, said Zener diode breaking down and thus causing the LED to light when the voltage on the bus (14) exceeds a predetermined level due to short circuit of the voltage regulator semiconductor (T) and hence uncontrolled current flow through the field winding (W).

4,374,381
TOUCH TERMINAL WITH RELIABLE PAD SELECTION
Henry H. Ng, Chestnut Hill, and Frederick R. Schmidt, Marshfield, both of Mass., assignors to Interaction Systems, Inc., Newtonville, Mass.
Continuation-in-part of Ser. No. 170,056, Jul. 18, 1980. This application May 1, 1981, Ser. No. 259,614
Int. Cl.^{3} G06F *3/14;* **G09F** *9/32*
U.S. Cl. 340—711 **10 Claims**

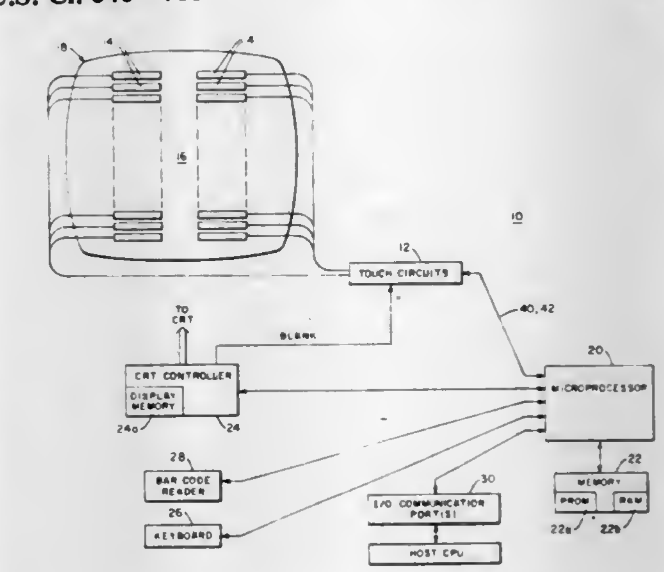

1. In a display touch terminal having plural user-selectable, touch-responsive pad elements on a display screen for user communication with a data processing system, the improvement comprising

A. means in circuit with said pad elements for producing a sequence of pulse signals with pulse signal durations responsive to the touch-selection condition of any selected pad element,

B. pulse measuring means in circuit with said means for producing for measuring said pulse signal durations a selected multiple of times for any selected pad element,

C. compare means in circuit with said measuring means for determining a difference in pulse signal duration between said multiple duration measures and a reference duration for said single pad element, and

D. means for identifying a single pad element as user selected in response to a selected comparison determination from at least some of said multiple duration measures.

4,374,382

MARKER CHANNEL TELEMETRY SYSTEM FOR A MEDICAL DEVICE

Harold T. Markowitz, Anoka, Minn., assignor to Medtronic, Inc., Minneapolis, Minn.

Filed Jan. 16, 1981, Ser. No. 225,561

Int. Cl.[3] A61N *1/30;* **A61B** *5/00*

U.S. Cl. 340—870.01 **6 Claims**

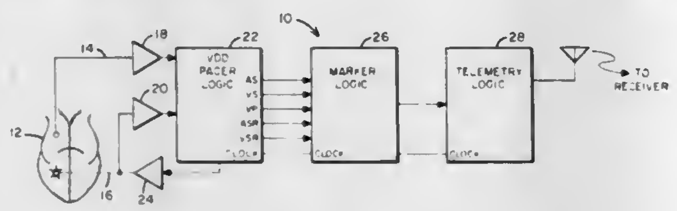

1. An implantable medical device of the type having means for detecting physiological events and having means for stimulating physiological activity and having a telemetry system for non-invasive communication with a remote receiver, said telemetry system comprising

means responsive to the detection of physiological events for producing a sensed event signal,

latch means responsive to said sensed event signal for storing a signal indicating the occurrence of said sensed event,

means responsive to the stimulation of physiological activity for producing a stimulated event signal,

latch means responsive to said stimulated event signal for storing a signal indicating the occurrence of said stimulated event,

encoding means for producing event identifying codes each representative of a said stored signal, and

means for serially transmitting said event identifying codes to said remote receiver.

4,374,383

CAPACITIVE TRANSDUCER FOR SENSING A HOME POSITION

Darryl R. Polk, Austin, and Errol R. Williams, Jr., Round Rock, both of Tex., assignors to International Business Machines Corporation, Armonk, N.Y.

Filed Dec. 22, 1980, Ser. No. 219,081

Int. Cl.[3] G01R *27/26;* **G08C** *19/16*

U.S. Cl. 340—870.37 **8 Claims**

1. A capacitive transducer for sensing a home position of a first moving member with relation to a second adjacent member comprising:

a transmitter portion on one of said members having a planar surface and a first plurality of conductive elements arranged in a line on said surface,

a receiver portion on the other of said members having a planar surface and a second plurality of conductive elements on said receiver surface corresponding in number and arrangement to said first plurality of conductive elements, said second plurality of elements being adjacent to and spaced from said first line of elements,

means for applying an alternating electrical signal to said first plurality of elements, and

means connected to said second plurality of elements for sensing the capacitive effect induced in said second elements by said electrical signal,

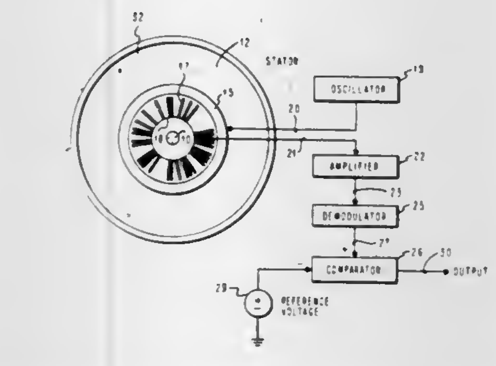

said first and second pluralities of elements being arranged in a non-repetitive pattern so that only a single home position in the relative motion between said two members will induce a single unique capacitive effect in said second plurality of elements.

4,374,384

MATRIX ENCODER FOR RESISTIVE SENSOR ARRAYS

Roger D. Moates, Raleigh, N.C., assignor to Westinghouse Electric Corp., Pittsburgh, Pa.

Filed Aug. 28, 1980, Ser. No. 182,295

Int. Cl.[3] G08C *19/04, 19/36*

U.S. Cl. 340—870.38 **31 Claims**

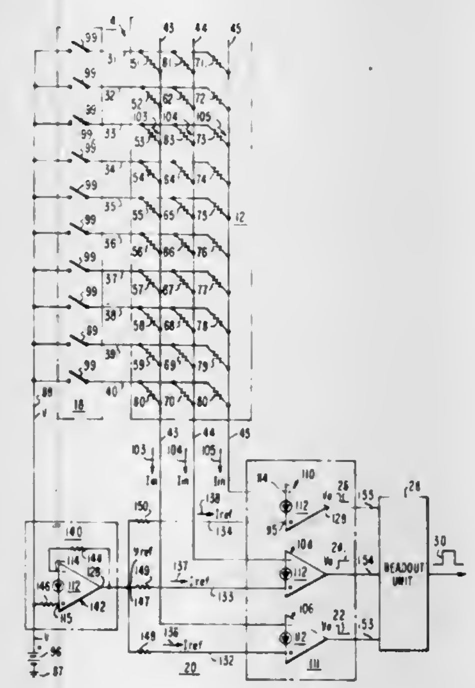

1. An encoder for producing electrical output signals in response to a condition to be monitored, comprising:

an encoding array of resistive sensors having variable resistances responsive to said condition to be monitored;

a matrix circuit including parallel inputs and parallel outputs connecting each of said resistive sensors to separate intersections of said matrix circuit;

sampling control means including normally high impedance switching means connected to said inputs of said matrix circuit, said normally high impedance switching means being selectively operable to sequentially energize separate ones of said inputs of said matrix circuit with a predetermined voltage to produce sensing currents in said variable resistances of each of said sensors connected to an energized one of said matrix circuit inputs; and

a detecting circuit connected with each of said parallel outputs of said matrix circuit, said detecting circuit maintaining minimum voltage differences between said parallel outputs for all values of said sensing currents and producing said electrical output signals in response to said sensing currents.

4,374,385

METHOD OF FORMING GRADATED IMAGES BY THERMAL PRINTER AND THERMAL HEAD FOR THERMAL PRINTERS

Osamu Yoshizaki, Fussa, and Masayuki Inai, Hachioji, both of, assignors to Konishiroku Photo Industry Co., Ltd., Tokyo, Japan

Filed Dec. 29, 1980, Ser. No. 220,805

Claims priority, application Japan, Dec. 27, 1979, 54-171913; Dec. 27, 1979, 54-171914; Dec. 27, 1979, 54-185050[U]

Int. Cl.[3] G01D *15/16, 15/10*

U.S. Cl. 346—1.1 **3 Claims**

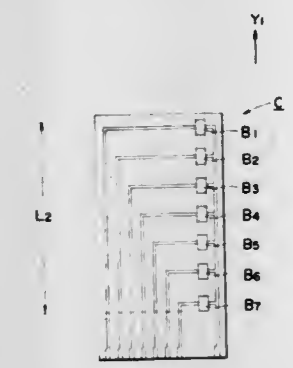

1. In a method of forming a gradated image by using a thermal printer wherein a thermal head having a plurality of heating elements in aligned arrangement scans in one direction perpendicular to said aligned arrangement and the surface of thermal paper is fed in a secondary scanning direction intermittently and synchronously with the scanning movement of the thermal head, the method comprising the steps of: scanning with the thermal head while giving image element information proportional to image density to the heating elements to provide printing sections; feeding an amount of the thermal paper which is not greater than ½ of the length of said aligned arrangement of the heating elements whereby the thermal paper advances to a position where the sections formed between the preceding printing sections become subsequent printing sections; and again scanning with the thermal head while giving new image element information proportional to image density to such heating elements that are not opposed to the subsequent printing sections, and while giving to such heating elements that are opposed to the subsequent printing sections image element information proportional to image density which is the same as the already-printed image element information provided by an adjacent heating element.

4,374,386

FORCE-TEMPERATURE STABILIZATION OF AN ELECTROMAGNETIC DEVICE

Carl R. Bildstein, Lafayette; Harry P. Heibein, Longmont, and Harlan P. Mathews, Louisville, all of Colo., assignors to International Business Machines Corporation, Armonk, N.Y.

Filed May 15, 1981, Ser. No. 264,379

Int. Cl.[3] G01D *15/18*

U.S. Cl. 346—75 **13 Claims**

10. In an ink supply system for an ink jet printer having an ink pump for pressurizing the ink so that ink jets out of a printer nozzle, a pump control for switching a pump drive between active and idle states when the printer is operative and inoperative respectively and a first driving means responsive to the pump control during the active state for electrically driving the pump at an operative frequency; the improvement comprising:

second driving means responsive to said pump control during the idle state for electrically driving said pump at an inoperative frequency outside the mechanical response capability of the pump;

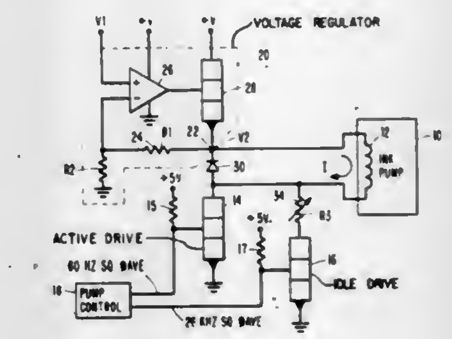

means for controlling an electrical power supplied to said pump by said second driving means whereby the power so supplied is substantially matched to an electrical power supplied said pump by said first driving means.

4,374,387

DEFLECTING DEVICE IN INK JET PRINTER

Tetsuo Iyoda, and Masatsugu Kikuchi, both of Ebina, Japan, assignors to Fuji Xerox Co., Ltd., Tokyo, Japan

Filed Jun. 5, 1981, Ser. No. 270,722

Claims priority, application Japan, Jul. 4, 1980, 55-90583

Int. Cl.[3] G01D *15/18*

U.S. Cl. 346—75 **4 Claims**

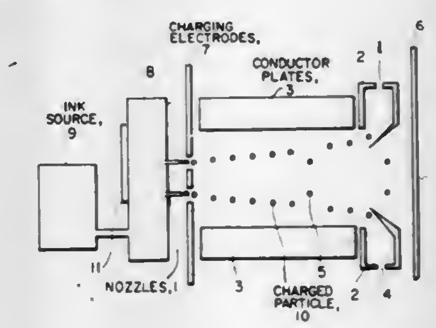

1. An ink jet printer comprising: a plurality of nozzles, said nozzles being arranged in two parallel lines; a charging electrode disposed adjacent outlets of said nozzles for selectively charging ink jet particle pairs jetted by said nozzles; and a deflecting device including first and second parallel electrodes disposed between said nozzles and a recording medium, equal low voltage potentials being applied to both said parallel electrodes, uncharged ink particles jetted by said nozzles passing between said electrodes and wherein, a potential applied to said charging electrode for charging selected pairs of said jetted ink particles, said equal low voltage potentials applied to said parallel electrodes, a distance between said nozzles, and distances between each path of said uncharged jetted ink particles and a respective most closely adjacent one of said parallel electrodes being mutually set so that charged pairs of said jetted ink particles are repulsed by one another and attracted to a corresponding one of said parallel electrodes so as to move out of a printing particle area before reaching said recording medium.

4,374,388
METHOD AND AN ARRANGEMENT FOR DEPICTING A HALF-TONE IMAGE
Joachim Heinzl, Munich, Fed. Rep. of Germany, assignor to Siemens Aktiengesellschaft, Berlin & Munich, Fed. Rep. of Germany
Filed Oct. 9, 1980, Ser. No. 195,595
Claims priority, application Fed. Rep. of Germany, Oct. 24, 1979, 2943018
Int. Cl.[3] G01D *15/18;* **H04N** *1/40*
U.S. Cl. 346—140 R **8 Claims**

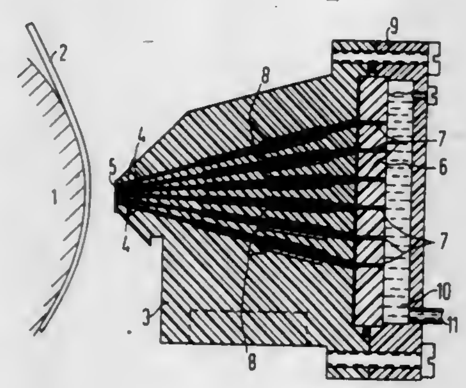

1. In a method of depicting a half-tone image in which the image is formed in grey steps extending between black and white and in which the image is generated from equisized image dots disposed in predetermined grid positions and of a number per unit area which determines the specific grey step, the improvement comprising the step of:
forming the image dots in grid positions which include three lines of orientation in which each grid position is surrounded by six directly adjacent grid positions and is equidistant from such grid positions.

4,374,389
HIGH BREAKDOWN VOLTAGE SEMICONDUCTOR DEVICE
Victor A. K. Temple, Clifton Park, N.Y., assignor to General Electric Company, Schenectady, N.Y.
Division of Ser. No. 913,026, Jun. 6, 1978, Pat. No. 4,242,690. This application Jun. 16, 1980, Ser. No. 159,813
Int. Cl.[3] H01L *29/74*
U.S. Cl. 357—13 **49 Claims**

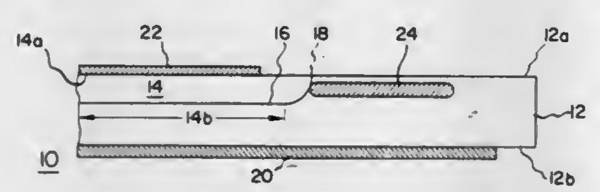

1. In a semiconductor device including at least one p-n junction, a first region of semiconductor material of selected conductivity type including top and bottom surfaces of a predetermined length and further including a side surface, a second region of semiconductor material of conductivity type opposite that of the first region and extending downward from a portion of the top surface of the first region, said second region including upper and lower surfaces, said p-n junction being situated at the interface between the first and second regions, and further including a junction termination formed at the intersection of the junction with the upper surface of said second region, wherein the improvement comprises:
a junction extension region of semiconductor material of the same conductivity type as the second region and having a greater lateral extent than thickness, the thickness of said junction extension region being less than the thickness of said second region, said junction extension region being located proximate to the junction termination and oriented approximately parallel to the major plane of the junction, a substantial portion of the junction extension region being situated between the junction termination and the side surface of the first region so as to increase the avalanche breakdown voltage of said device.

4,374,390
DUAL-WAVELENGTH LIGHT-EMITTING DIODE
Tien P. Lee, Holmdel, N.J., assignor to Bell Telephone Laboratories, Incorporated, Murray Hill, N.J.
Filed Sep. 10, 1980, Ser. No. 185,666
Int. Cl.[3] H01L *29/06, 33/00*
U.S. Cl. 357—17 **10 Claims**

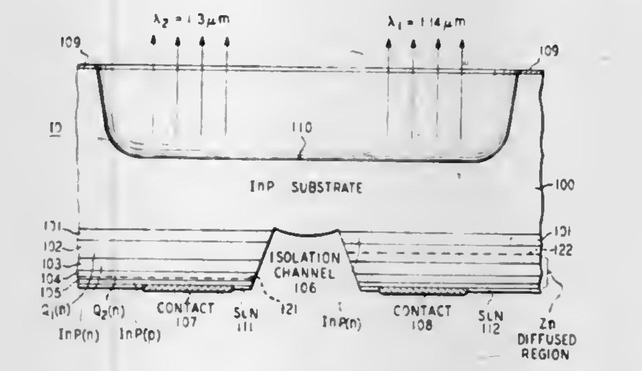

1. A planar light-emitting diode comprising
an n-type indium phosphide body,
a first electrical contact to said body, and
a plurality of epitaxial layers grown on said body, characterized by
a first quaternary layer having an initial n-type conductivity,
a p-type indium phosphide layer on said first layer and a first pn junction in said first layer,
said plurality of layers further includes a second quaternary layer initially having n-type conductivity,
said second layer being positioned between said body and said first layer,
said plurality of layers being physically separated, by means of an isolation channel, into at least two separate regions each including a single p-n junction,
one of said regions being diffused with a p-type dopant so as to form a second pn junction in said second quaternary layer, and
a second electrical contact to said p-type indium phosphide layer in each of said regions.

4,374,391
DEVICE FABRICATION PROCEDURE
Irfan Camlibel, Stirling; Shobha Singh, Summit, and LeGrand G. Van Uitert, Morristown, all of N.J., assignors to Bell Telephone Laboratories, Incorporated, Murray Hill, N.J.
Filed Sep. 24, 1980, Ser. No. 190,342
Int. Cl.[3] C23C *15/00;* **H01L** *31/00*
U.S. Cl. 357—17 **36 Claims**

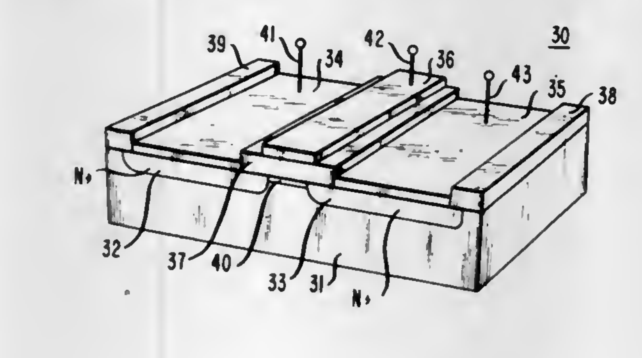

19. A device comprising a surface at least partially coated with a borosilicate glass layer, said layer fabricated by sputtering a borosilicate glass target material characterized in that the borosilicate glass target material used in the sputtering procedure is prepared by a procedure comprising the steps of
a. mixing together a substance A consisting essentially of SiO_2 in which at least 90 weight percent of the SiO_2 has a particle size less than 10 microns with a substance B consisting essentially of B_2O_3 in which at least 90 weight percent of the B_2O_3 has a particle size less than 10 microns and
b. heat treating the resulting mixture at a temperature between 1500 and 2100 degrees C. for at least 6 hours.

4,374,392
MONOLITHIC INTEGRATED CIRCUIT INTERCONNECTION AND FABRICATION METHOD
Walter F. Reichert, East Brunswick, N.J., assignor to RCA Corporation, New York, N.Y.
Filed Nov. 25, 1980, Ser. No. 210,250
Int. Cl.[3] H01L *29/78*
U.S. Cl. 357—23 **7 Claims**

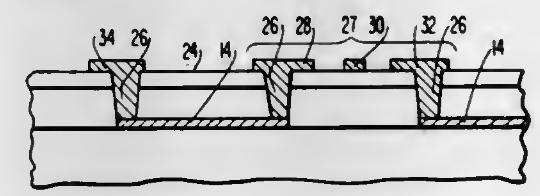

1. A monolithic integrated circuit, comprising:
a substrate of III-V material having a surface;
an interconnection pattern disposed on the substrate surface;
an epitaxial layer disposed on the substrate surface and the interconnection pattern; and
a plurality of circuit elements disposed on the epitaxial surface, each element having a portion which contacts the interconnection pattern.

4,374,393
LIGHT TRIGGERED THYRISTOR DEVICE
Koichi Kamahara, Tokyo, Japan, assignor to Mitsubishi Denki Kabushiki Kaisha, Tokyo, Japan
Filed Oct. 10, 1980, Ser. No. 195,907
Claims priority, application Japan, Oct. 13, 1979, 54-133916
Int. Cl.[3] H01L *27/14, 29/74, 23/16, 39/02*
U.S. Cl. 357—30 **3 Claims**

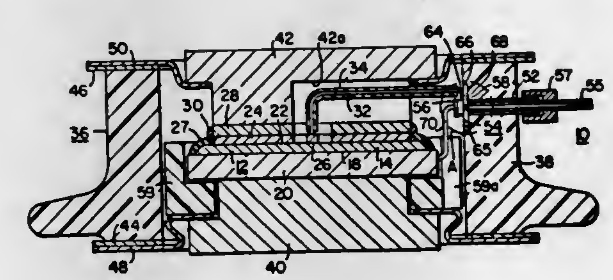

1. A light triggered thyristor device comprising a mean thyristor, an auxiliary thyristor capable of being triggered by a light signal incident on a light receptor area thereof, and an electrically insulating hermetically sealed cylinder case, said case having side walls forming a hole through which a fiber optics cable is introduced into said case, said main thyristor being supported in said case by a pressure contact of exterior anode and cathode electrodes, said auxiliary thyristor being fixed to said walls of said case with the light receptor area thereof placed in registry with an end portion of said fiber optics cable, anode electrodes of both of said thyristors being electrically interconnected, and a gate electrode of the main thyristor and a cathode electrode of the auxiliary thyristor being electrically interconnected.

4,374,394
MONOLITHIC INTEGRATED CIRCUIT
Raymond L. Camisa, East Windsor, N.J., assignor to RCA Corporation, New York, N.Y.
Filed Oct. 1, 1980, Ser. No. 192,849
Int. Cl.[3] H01L *23/34, 23/50*
U.S. Cl. 357—81 **9 Claims**

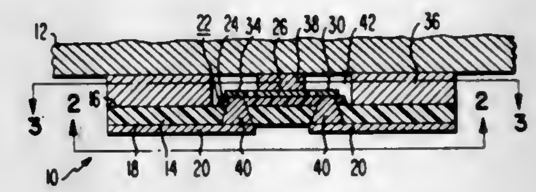

1. A monolithic integrated circuit, comprising:
a substrate having first and second opposing major surfaces;
a semiconductor device on the first major surface, a circuit film pattern on the second surface, and means for interconnecting the device to the film pattern;
a metallization layer on the first surface, said layer surrounding the device and having a thickness greater than the height of the device from the first surface; and
an electrode extension projecting from the device to a height substantially equal to the thickness of the metallization layer.

4,374,395
VIDEO SYSTEM WITH PICTURE INFORMATION AND LOGIC SIGNAL MULTIPLEXING
Carlo L. Herrmann, and Granville E. Ott, both of Lubbock, Tex., assignors to Texas Instruments Incorporated, Dallas, Tex.
Filed Dec. 24, 1980, Ser. No. 219,806
Int. Cl.[3] H04N *9/535*
U.S. Cl. 358—22 **14 Claims**

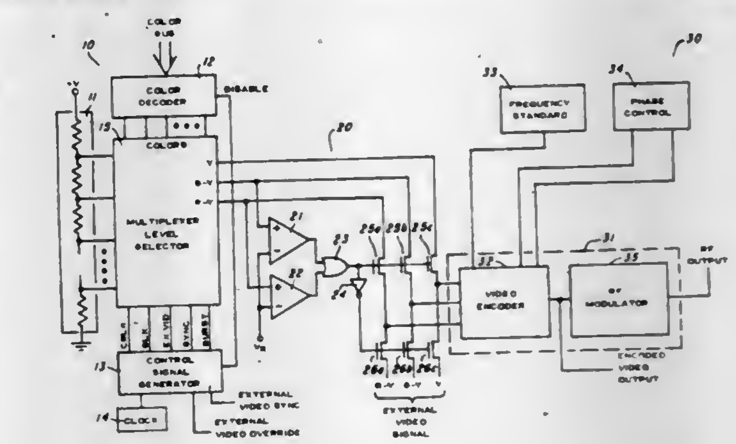

1. A luminance signal generator having a first output terminal, for generating at said first output terminal a line synchronization signal having a predetermined fixed first voltage during a first predetermined period of a repetitive video line interval and for generating at said first output terminal a brightness signal having a voltage in the range between a second voltage and a third voltage during a second predetermined period of said repetitive video line interval, said range between said second voltage and said third voltage extending to the limits of said brightness signal voltages and not including said first voltage; and
two color difference signal generators, each having a second output terminal and each responsive to an external video override signal, each for generating at said second output terminal a color difference signal having a voltage in said range between said second voltage and said third voltage during said second predetermined period, said range between said second voltage and said third voltage extending to the limits of said color difference signal voltages, and each for generating at said second output terminal an

external video enable signal having said first voltage when said external video override signal is received.

4,374,396

CHROMINANCE SUB-CARRIER MODIFIER FOR PAL-COLOR TELEVISION SIGNALS

Michael Hausdörfer, Mühltal, Fed. Rep. of Germany, assignor to Robert Bosch GmbH, Stuttgart, Fed. Rep. of Germany

Continuation-in-part of Ser. No. 33,536, Apr. 26, 1979, abandoned. This application Nov. 10, 1980, Ser. No. 205,219

Int. Cl.[3] H04N *9/50, 9/38, 5/78*

U.S. Cl. 358—24 **5 Claims**

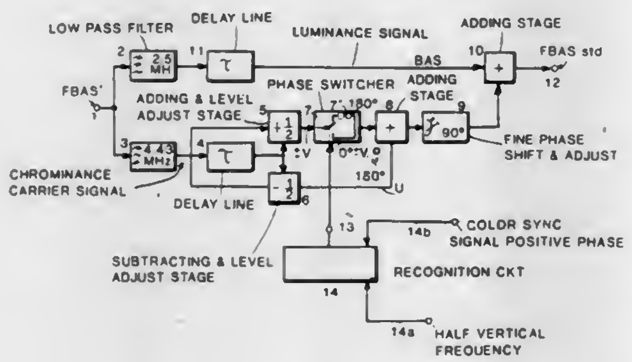

1. A chrominance carrier modifier apparatus for PAL-color television signals to provide television signals ($FBAS_{std}$) in accordance with PAL-standards derived from applied signals (FBAS') lacking chrominance sub-carrier frequency phase alternation, particularly when derived from magnetic transducer apparatus in which tape transport is stopped to reproduce still pictures comprising

a PAL-signal splitter and delay circuit (**4,5,6**) in which the chrominance sub-carrier is added to, or subtracted from, respectively, a delayed chrominance sub-carrier signal which is time-delayed by a delay time of about 283.5 or 284 chrominance sub-carrier signal periods, to provide added and subtracted first Signals (U resp. V), respectively;

a controlled inverter (**7**) connected to receive that one of the first signals, which periodically changes its sign ($\pm$V);

means (**13**,**14**) connected to and controlling said controlled inverter (**7**) in accordance with a signal having half the vertical frequency to thereby control said controlled inverter (**7**) to provide inversion of said one of the first signals ($\pm$V) during each second field;

and an adding stage (**8**) which receives the alternatingly direct and inverted first signal ($\pm$V) from the output of the controlled inverter (**7**) and the other first signal (U) and providing a second combined chrominance sub-carrier signal at its output.

4,374,397

LIGHT VALVE DEVICES AND ELECTRONIC IMAGING/SCAN APPARATUS WITH LOCATIONALLY-INTERLACED OPTICAL ADDRESSING

Jose M. Mir, Rochester, N.Y., assignor to Eastman Kodak Company, Rochester, N.Y.

Filed Jun. 1, 1981, Ser. No. 268,975

Int. Cl.[3] H04N *1/22*

U.S. Cl. 358—75 **9 Claims**

6. A light valve device for locationally-interlaced, optical addressing of an image exposure or scan station, said device comprising a linear light valve array adapted for optical alignment with a line of such station, said array having a plurality of location-address sectors that each include a plurality of discrete light valve pixel portions which are electrically addressable to control the passage of light, each light valve pixel portion being coupled for common electrical address, in an inter-sector group, with one light valve pixel portion of each of the other location-address sectors, but independently address-

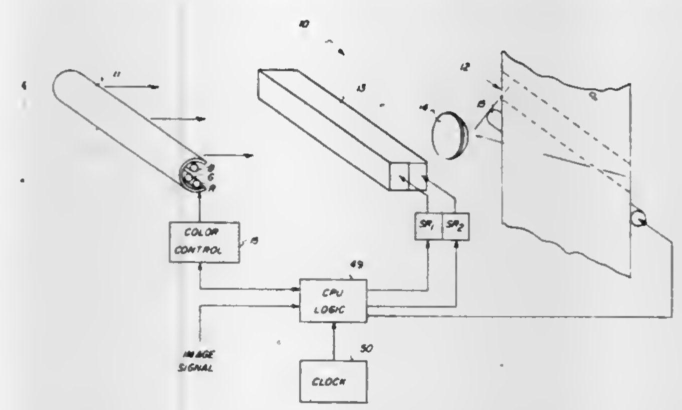

able with respect to the other light valve pixel portions of its own location-address sector.

4,374,398

MULTIPLEXED TELEVISION AUDIO SIGNAL RECEIVER

Akira Yamashita, Nagaokakyo, and Nagai Hiroyuki, Ibaraki, both of Japan, assignors to Matsushita Electric Industrial Co., Ltd., Osaka, Japan

Filed Apr. 8, 1981, Ser. No. 252,182

Claims priority, application Japan, Apr. 15, 1980, 55-49691

Int. Cl.[3] H04N *5/60;* **H04B** *1/10*

U.S. Cl. 358—143 **3 Claims**

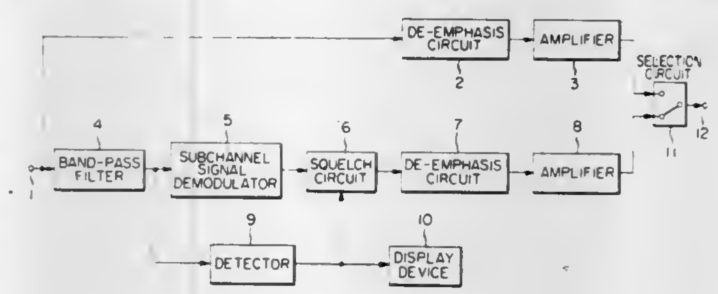

1. A multiplexed television audio signal receiver of the type capable of receiving by the inter-carrier system the television multiplexed audio signals comprising the main audio signal multiplexed with a second or third FM subchannel signal, characterized by the provision of

(a) a band-pass filter for extracting the FM subchannel signal,

(b) a clipper circuit for suppressing only the carrier level of the output from said band-pass filter,

(c) a detector for detecting the output from said clipper circuit so as to detect the noise level, and

(d) a squelch circuit responsive to the output from said detector for cutting off the demodulated subchannel signal.

4,374,399

INSERTION OF NON-SYNCHRONOUS DATA INTO VERTICAL INTERVAL

James W. Ensinger, Roselle, Ill., assignor to Zenith Radio Corporation, Glenview, Ill.

Filed Aug. 13, 1981, Ser. No. 292,453

Int. Cl.[3] H04N *7/04*

U.S. Cl. 358—147 **16 Claims**

1. Apparatus for encoding a plurality of data packets into the vertical intervals of a received television signal comprising:

means for successively generating each of said data packets in the form of a pair of duplicate data packets at twice the field rate of a standard television signal;

storage means adapted for storing one of said data packets;

means responsive to said generating means and to said received television signal for replacing the contents of said storage means with one of the duplicate data packets of each of said pairs whose generation is non-coincident in time with the occurrence of a vertical interval of said received television signal; and

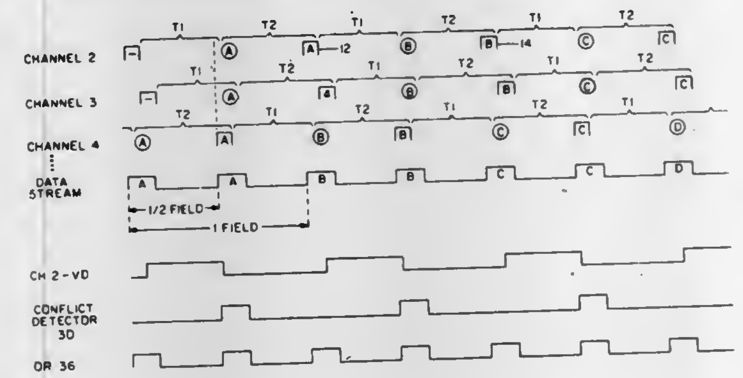

means responsive to the occurrence of each vertical interval of said received television signal for inserting therein the current contents of said storage means.

4,374,400

TELEVISION GHOST CANCELLATION SYSTEM WITH GHOST CARRIER PHASE COMPENSATION

David D. Holmes, Chesterfield, N.J., assignor to RCA Corporation, New York, N.Y.

Filed Jun. 16, 1981, Ser. No. 274,180

Int. Cl.[3] H04N *5/21*

U.S. Cl. 358—167 **6 Claims**

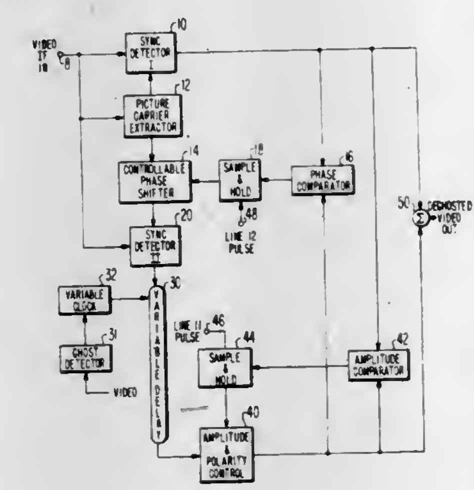

1. In a television receiver, including a source of desired intermediate frequency video signals including a picture carrier, said signals being subject to contamination by a ghost signal which includes a ghost signal picture carrier;

a picture carrier extractor circuit having an input responsive to said intermediate frequency video signals and an output at which a first reference signal substantially aligned in phase and frequency with the picture carrier of said video signals is produced; a first synchronous detector having a first input coupled to receive said intermediate frequency video signals including said ghost signal when present, a second input coupled to receive said first reference signal, and an output at which a first baseband video signal is produced; and a television signal ghost detector responsive to said first baseband video signal for determining the time interval between the occurrence of said video signals and their corresponding ghost signal components when a ghost signal is present; a television signal ghost cancellation system comprising:

a controllable phase shifter having a signal input coupled to receive said first reference signal, a control signal input, and an output at which a second reference signal is produced;

a second synchronous detector having a first input coupled to receive said intermediate frequency video signals, a second input coupled to receive said second reference signal, and an output at which a second baseband video signal is produced;

a variable delay line having an input coupled to the output of said second synchronous detector, and an output at which a delayed video signal is produced, and coupled to said ghost detector for delaying said second baseband video signal by an amount of time substantially equal to the time interval between the occurrence of said video signals and their corresponding ghost signal components when a ghost signal is present;

an amplitude and polarity control circuit having a signal input coupled to the output of said delay line, a control input, and a signal output for producing a pseudo-ghost signal;

amplitude comparison means having a first input coupled to the output of said first synchronous detector, a second input coupled to the output of said amplitude and polarity control circuit, and an output coupled to the control input of said amplitude and polarity control circuit for causing said pseudo-ghost signal to be substantially equal in amplitude and opposite in polarity to said ghost signal of said first baseband video signal;

phase comparison means having a first input coupled to the output of said first synchronous detector, a second input coupled to the output of said amplitude and polarity control circuit, and an output coupled to the control input of said controllable phase shifter for causing said phase shifter to shift the phase of said first reference signal by an amount substantially equal to the phase difference between said picture carrier of said desired intermediate frequency video signals and said picture carrier of said ghost signal; and

means coupled to the outputs of said first synchronous detector and said amplitude and polarity control circuit for combining said first baseband video signal with said pseudo-ghost signal to produce a deghosted video signal.

4,374,401

TAPE PLAYER

Kazuki Takai, Toda, Japan, assignor to Clarion Co., Ltd., Tokyo, Japan

Filed Oct. 18, 1979, Ser. No. 86,054

Claims priority, application Japan, Oct. 20, 1978, 53-143326[U]; Oct. 26, 1978, 53-146436[U]; Mar. 12, 1979, 54-27639

Int. Cl.[3] G11B *15/18, 23/10*

U.S. Cl. 360—96.5 **7 Claims**

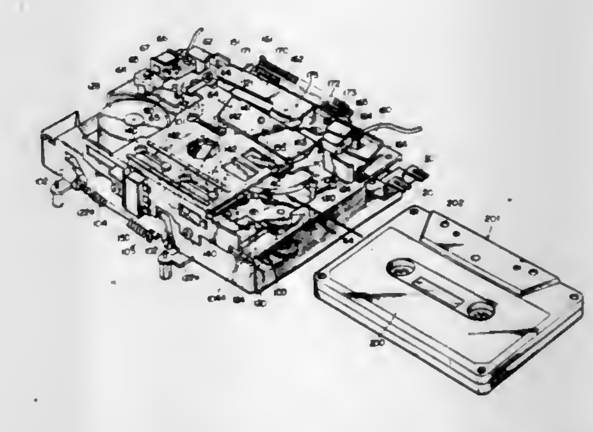

1. A tape player which comprises: magnetic recording/reproducing means for recording signals on or reproducing signals recorded on the tape in a cassette in a recording/reproducing position; a cassette-receiving frame; slide means adapted to slide rearwardly on said frame under the force of a tape cassette pushed rearwardly thereinto; lift means for effecting the placement of means adjacent to said cassette to effect a tape feeding operation in a raised or lowered position thereof and is initially located in the other position; engaging means

provided on said lift means and engaged by said slide means upon rearward movement thereof in said frame so that the lift means is moved from its initial lowered or raised position to the other of said positions as said slide means is moved to the rear of said frame; lock means having a lock part which locks said lift means in the latter position and said slide means in a rearwardmost position when the slide means has been moved to its rearwardmost position where the cassette is in a position preparatory to a recording/reproducing operation; attractable means connected to said lock means; electromagnetic means; switch means provided for energizing said electromagnetic means in response to the sliding of said slide means toward said rearwardmost position; and said attractable means being attracted by said electromagnetic means when said electromagnetic means is energized to complete the movement of said lock means to its final locking position, the attracting force of said electromagnetic means aiding in the completion of the movement of said lock means to its final locking position and the movement of said lift means and slide means to their locked positions during a cassette insertion operation, to reduce the force necessary to move said cassette into a position preparatory for a recording/reproducing operation.

4,374,402

PIEZOELECTRIC TRANSDUCER MOUNTING STRUCTURE AND ASSOCIATED TECHNIQUES

Norman S. Blessom; Herbert U. Ragle, both of Thousand Oaks, and Dean DeMoss, Camarillo, all of Calif., assignors to Burroughs Corporation, Detroit, Mich.

Filed Jun. 27, 1980, Ser. No. 163,468

Int. Cl.³ G11B *5/48, 5/56, 21/24*

U.S. Cl. 360—104 **9 Claims**

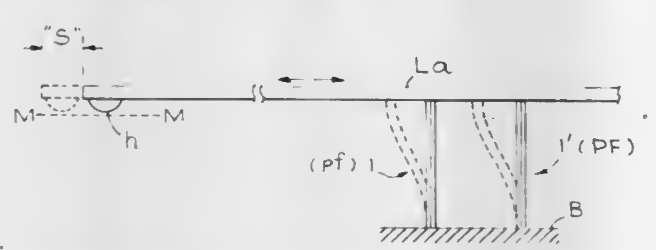

1. An actuator unit mounted on prescribed actuator means including a transducer means at the free end thereof adapted to reciprocate elongate load means along a prescribed rectilinear path, being supported on at least two parallel flexure means, each flexure means comprising an elongate, composite multi-element beam;

each such beam being comprised of a center section flanked, at a first end, by a first bending section and associated first bending means adapted to bend this first section in a first direction relatively along said path; and

also flanked at a second, opposite, end by a second bending section and associated second bending means adapted to bend this second section in a second direction, opposite said first direction,

said first and second bending means being adapted to each execute a compound "s-bend",

whereby said elongate load means is so thrust along said rectilinear path as to minimize azimuth dislocation of the transducer means.

4,374,403

MAGNETIC RECORDING AND REPRODUCING SYSTEM

Mitsuaki Oshima, Kyoto; Yutaka Neichi, Nara; Atsushi Iga, Takatsuki, and Ryoichi Wada, Habikino, all of Japan, assignors to Matsushita Electric Industrial Co., Ltd., Osaka, Japan

Filed Jun. 24, 1980, Ser. No. 162,611

Claims priority, application Japan, Jun. 27, 1979, 54-82153; Aug. 24, 1979, 54-108291

Int. Cl.³ G11B *5/12*

U.S. Cl. 360—113 **24 Claims**

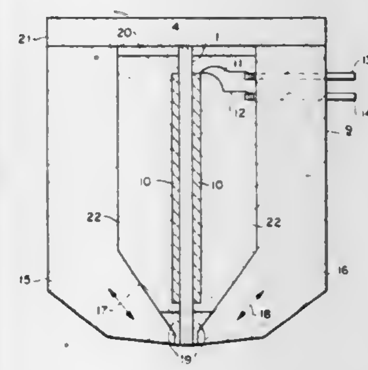

1. A magnetic recording/reproducing system comprising:

(a) a magnetic switching device adapted to exhibit abrupt magnetic switching phenomena in accordance with the increase in a magnetic field and composed of portions made of a magnetic material and having relatively high and relatively low coercive forces;

(b) a magnetic head accommodating said magnetic switching element;

(c) magnetic detecting means disposed within such a range as can receive the magnetic influences from said magnetic switching device;

(d) magnetizing means disposed within such a range as can receive the magnetic influences from said magnetic switching device; and

(e) magnetizing signal generating means rendered operative to feed a magnetizing signal to said magnetizing means in response to the signal from said magnetic detecting means,

whereby the magnetic switching means, which is disposed in said magnetic head for exhibiting the abrupt magnetic switching phenomena in accordance with the increase in the magnetic field, is magnetized by said magnetizing means prior to being driven by said magnetizing signal generating means so that the magnetic switching phenomena may be established in said magnetic switching device in response to the magnetizing signal, said magnetizing signal recorded in a magnetic recording medium facing said magnetic head, and may be extracted as a voltage signal by said magnetic detecting means.

4,374,404

NON-ABRASIVE MAGNETIC HEAD CLEANING SYSTEM

C. Paul Davis, Woodland Hills, Calif., assignor to Innovative Computer Products Corp., Tarzana, Calif.

Filed Aug. 25, 1980, Ser. No. 180,963

Int. Cl.³ G11B *5/41, 23/02, 25/04*

U.S. Cl. 360—128 **10 Claims**

1. A method for cleaning magnetic heads in a disk system employing a jacket that rotatably supports a cleaning disk within its interior and has a first opening therein and has a perforated portion in opposition to the opening; the steps comprising:

removing the perforated portion to form a second opening;

saturating a portion of said cleaning disk with a cleaning solution via said first opening;

bringing said cleaning disk into contact with two magnetic heads to be cleaned; and

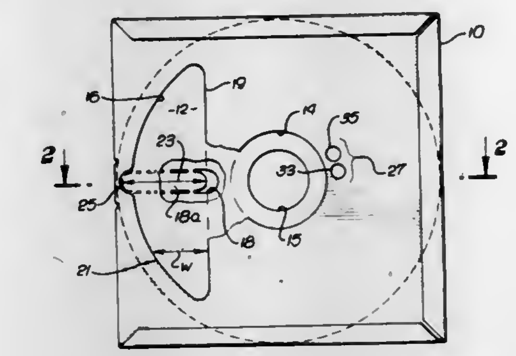

rotating said cleaning disk to alternately contact said head with a wet portion and a dry portion of said cleaning disk.

4,374,405

INSULATING-ISOLATING BARRIER SYSTEM FOR ELECTRICAL DISTRIBUTION EQUIPMENT BUSWORK

William F. Olashaw, Plainville, and James H. Postlethwait, Weatogue, both of Conn., assignors to General Electric Company, New York, N.Y.

Filed Dec. 10, 1980, Ser. No. 214,852

Int. Cl.³ H02B *1/14, 1/20*

U.S. Cl. 361—355 **5 Claims**

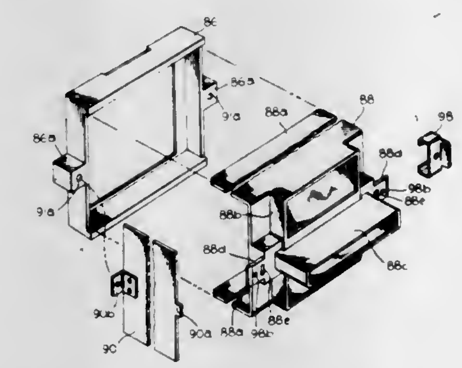

1. An insulating-isolating barrier system for electrical switchboards and the like, said system comprising, in combination:

a plurality of modular, insulative bases assembled in end-to-end vertical relation to a switchboard frame, said bases including a plurality of side-by-side channels in which switchboard riser busbars are individually supported;

an insulative barrier panel secured to each said base to close off said channels and isolate said riser busbars therein, at least one of said panels having apertures therein individually accessing said riser busbars for electrical connection with separate power connectors, said power connectors making bus joints between separate runs of horizontal busbars and said riser busbars;

separate pairs of elongated, insulative barrier members clamped in semi-embracing relation with said horizontal busbar runs extending between said bus joints; and

a joint enclosure for each said bus joint, said enclosure including

an insulative collar embracing said power connector; and

a removable, insulative cover mating with said collar to envelop said bus joint thereat, each said bus joint enclosure cover includes a frontal wall and integral therewith separate upper and lower substantially rectangular skirts disposed in lapped relation with said collar.

4,374,406

LIGHTWEIGHT ATTACHMENT FOR SOLAR CELL ARRAY NEXT TO A FLUORESCENT TUBE

James Hepp, 5 Fairview La., Glen Cove, N.Y. 11542

Filed Jul. 10, 1981, Ser. No. 282,186

Int. Cl.³ F21V *33/00;* **G09F** *11/02*

U.S. Cl. 362—253 **7 Claims**

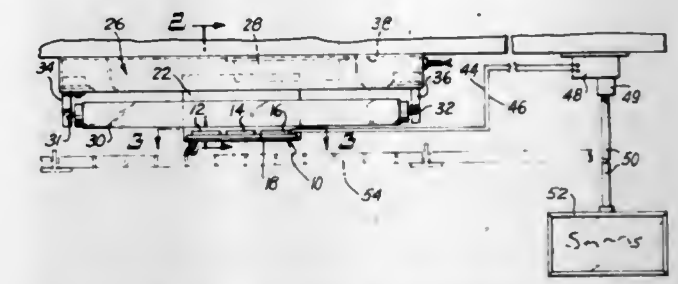

1. A light fixture including a lightweight attachment positioning a solar cell array next to a fluorescent tube, comprising:

a ferromagnetic housing holding a fluorescent tube and a ballast;

a lightweight thermoplastic horizontal support;

a plurality of solar cells in side by side array on said support which are connected to each other in series by a pair of conductors, one of which is connected to a ground on said support;

a holding means structurally connected to said support and fastened to said housing to hold said array of solar cells on said support close to the tube and in fixed relation to the fixture in which said tube is placed:

spacing means which space said support in adjacent spacing to said fluorescent tube; whereby

said conductors connecting said plurality of solar cells in series provide a dc current which is due to the radiation impinging upon said array from said fluorescent tube to constitute a power package furnishing dc current as long as said tube is lit.

4,374,407

BALLAST MOUNTING MEANS

Jim L. Drost, and Myron K. Gordin, both of Oskaloosa, Iowa, assignors to Muscatine Lighting Mfg. Co., Inc., Muscatine, Iowa

Filed Dec. 23, 1980, Ser. No. 219,540

Int. Cl.³ F21S *3/02*

U.S. Cl. 362—432 **5 Claims**

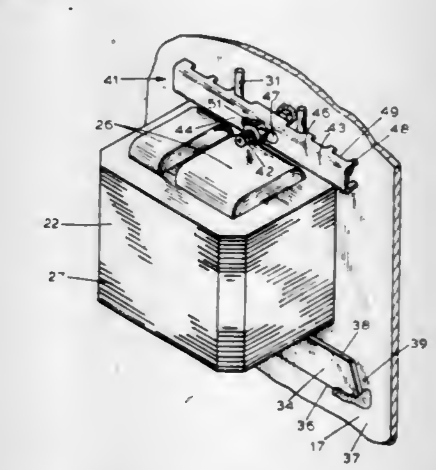

1. Means for mounting a ballast within a housing having a flat side wall and wherein the ballast is formed adjacent one side surface thereof with a pair of laterally spaced openings extended therethrough in a substantially parallel relation with said side surface, comprising:

(a) a pair of linear mounting rods corresponding to and extended through said openings having end sections projected outwardly from opposite ends of a corresponding opening,

(b) means on said container side wall for receiving in supported positions therein a first pair of adjacent ones of said end sections, and

(c) clamping means secured to and projected inwardly of said side wall for engaging and moving the second pair of adjacent ones of said end sections toward said side wall whereby the rods are flexed to positions wherein the ballast is rigidly clamped against said side wall.

4,374,408

MULTI-PASS SYSTEM AND METHOD FOR SOURCE TO SOURCE CODE TRANSLATION

Stephen W. Bowles, and George E. Bethke, Jr., both of Goleta, Calif., assignors to Burroughs Corporation, Detroit, Mich.

Filed Jun. 16, 1971, Ser. No. 153,767

Int. Cl.³ G06F *9/00, 15/38*

U.S. Cl. 364—200 **19 Claims**

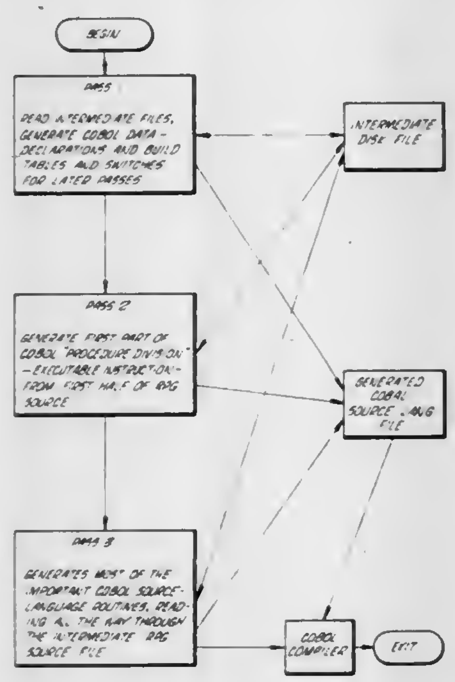

9. In a data processing apparatus responsive to its particular machine language, the method for the translation of a routine from a first higher level program language to a second higher level program language, compiling said routine from said second higher level language into said particular machine language, and activating said apparatus to execute said particular machine language routine, said first higher level language implying a general algorithm characteristic of said first program language and said second higher level language being COBOL, said method comprising:

receiving a first plurality of sets of signals representing a routine in said first language;

generating, each time, in response to the receipt of said received first plurality of sets of signals, a second plurality of sets of signals including sets of signals representing said general algorithm as required by said first plurality of sets of signals;

receiving said second plurality of sets of signals and generating, in response thereto, a third plurality of sets of signals representing said routine in said particular machine language code; and

executing said routine in response to said third plurality of sets of signals in said apparatus.

4,374,409

METHOD OF AND SYSTEM USING P AND V INSTRUCTIONS ON SEMAPHORES FOR TRANSFERRING DATA AMONG PROCESSES IN A MULTIPROCESSING SYSTEM

Jacques Bienvenu, Paris; Claude Carre, La Varenne-St-Hilaire; Duc L. Tuong, and Henri Verdier, both of Paris, all of France, assignors to Compagnie Honeywell Bull, Paris, France

Continuation of Ser. No. 529,017, Dec. 2, 1974, abandoned. This application Nov. 3, 1978, Ser. No. 957,442

Claims priority, application France, Nov. 30, 1973, 73.42697

Int. Cl.³ G06F *9/46*

U.S. Cl. 364—200 **16 Claims**

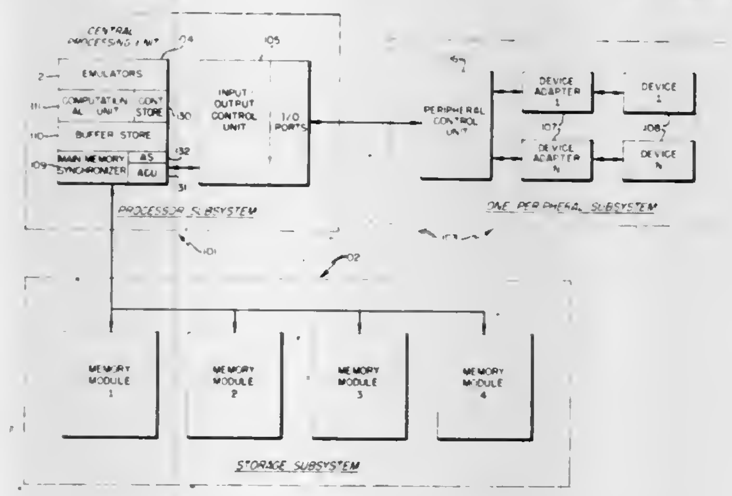

1. In a multiprocessing data processing system wherein a data element is held in a memory member of said system, said data element having a tally field representing the number of times a particular kind of event has occurred, and wherein said data processing system during the execution of a process executes instructions of a particular class, a system for transferring data between processes comprising:

retrieving means controlled by one of said instructions for retrieving said data element from said memory member;

testing means for testing the tally field of said data element retrieved from said memory member to determine the number of times the particular event has occurred and for generating a first signal when the number represented by said tally field is greater than a predetermined value and for generating a second signal when said number is not greater than said predetermined value;

transfer means responsive to said first signal and controlled by an instruction executed during execution of said process for initiating selectively the transfer of data from said process to an area in said memory member of said system associated with said data element and the transfer of data previously stored in the area from the area to said process to establish data transfer between processes; and

changing means further responsive to said first signal and controlled by said instruction for updating said tally field following said transfer of data by changing said tally field to represent a different number.

4,374,410

DATA PROCESSING SYSTEM

Toshihiro Sakai, Kawasaki, and Tetsuji Kuhara, Matsudo, both of Japan, assignors to Fujitsu Limited, Kawasaki and USAC Electronic Industrial Co., Ltd., Ishikawa, both of, Japan

Continuation-in-part of Ser. No. 949,115, Oct. 16, 1978, abandoned. This application Aug. 8, 1979, Ser. No. 64,725

Claims priority, application Japan, Oct. 8, 1977, 52-121154

Int. Cl.³ G06F *9/36*

U.S. Cl. 364—200 **7 Claims**

6. A data processing system, comprising:

a central processing unit having a logical address mode and a real address mode and having an address register for storing a logical address or a real address in dependence upon whether said central processing unit is in the logical address mode or the real address mode, said address register having a number of bit positions greater than N but less than 2 N (where N is an integer), said bit positions including a block of N high-order bits and a block of N low-order bits;

means for setting a page number portion of the logical address in a predetermined number, smaller than N, of the bits of said block of high-order N bits of the address register of the central processing unit when said central processing unit is in the logical address modes;

means for setting an address in page portion of the logical address in the remaining bit positions of said address register when said central processing unit is in the logical address mode;

means for setting a real address in said block of low-order N bits and in a predetermined number of the bits of said block of high-order N bits of the address register when said central processing unit is in the real address mode;

a main memory;

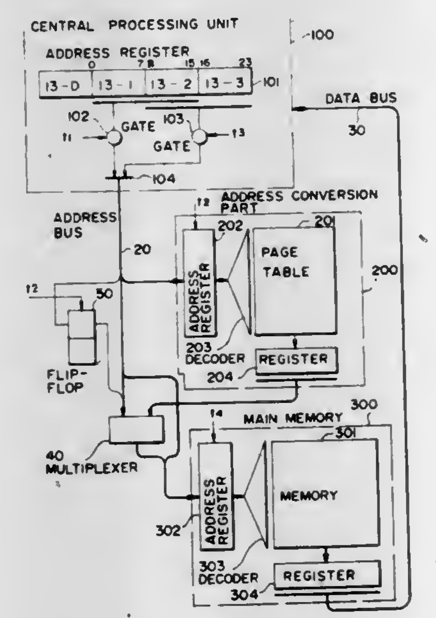

an N-bit address bus operatively connected to the central processing unit and the main memory;

sending means for sending the content of the address register out on the address bus in accordance with said block of high-order N bits of the address register being sent out first and said block of low-order N bits of the address register being sent out second, said sending means including means for sending the N bits so that said block of high-order N bits is overlapping with some of the bits in said block of low-order N bits, said sending means sending predetermined ones of said 2 N bits twice; and

address conversion means, operatively connected to the N bit address bus and the main memory, for converting said block of high-order N bits into a real page number in the main memory when said central processing unit is in the logical address mode, so that after said block of high-order N bits and said block of low-order N bits have been sent by said sending means an address for accessing said main memory is provided whether said central processing unit is in the real address mode or the logical address mode.

4,374,411

RELOCATABLE READ ONLY MEMORY

Dale A. Heatherington, Decatur, Ga., assignor to Hayes Microcomputer Products, Inc., Atlanta, Ga.

Filed Feb. 14, 1980, Ser. No. 121,450

Int. Cl.³ G06F *13/00*

U.S. Cl. 364—200 **6 Claims**

1. In a read only memory, adapted to be used with an L-bit byte, byte oriented processor, said processor being characterized by a data bus for at least presenting outputs from said memory to an address register in said processor, by an instruction set including memory reference instructions of M bytes requiring M fetches to memory wherein the Mth fetched byte of each of said memory reference instructions is a most significant byte, L and M being positive integers, said processor providing predetermined status signals, the improvement comprising:

location means for providing N replacement address bits,

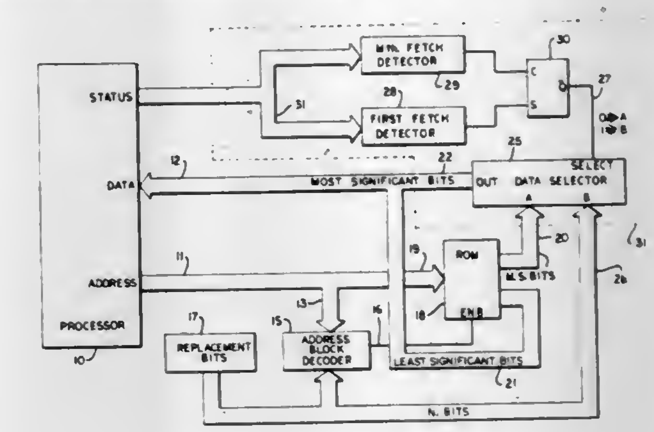

N being an integer greater than zero and less than or equal to a L;

means responsive to said status signal for providing a most significant byte signal in response to an Mth fetch of a said memory reference instruction; and

data selector means for providing said N replacement bits to lines of said data bus in response to said most significant byte signal.

4,374,412

CIRCULATING PAGE LOOSE SYSTEM

Mario R. Schaffner, 3455 Table Mesa Dr., Apt. 228K, Boulder, Colo. 80303

Continuation of Ser. No. 573,211, Apr. 30, 1975, abandoned, which is a continuation of Ser. No. 328,526, Feb. 1, 1973, abandoned, which is a continuation-in-part of Ser. No. 184,598, Sep. 28, 1971, abandoned, which is a continuation-in-part of Ser. No. 779,824, Nov. 29, 1968, abandoned, which is a continuation-in-part of Ser. No. 640,180, May 22, 1967, abandoned, which is a continuation-in-part of Ser. No. 533,741, Feb. 1, 1966, abandoned, which is a continuation-in-part of Ser. No. 458,692, May 25, 1965, abandoned. This application May 7, 1980, Ser. No. 147,671

Int. Cl.³ G06F *15/06, 15/347*

U.S. Cl. 364—200 **12 Claims**

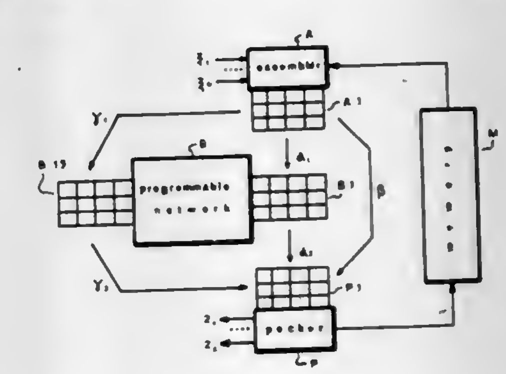

1. A programmable network for simultaneously processing sets of variables, comprising:

a plurality of registers X for holding page variables x_i;

a plurality of registers X' for holding auxiliary variables x'_i;

a plurality of registers U for holding input data u_i;

a plurality of registers W for holding program words $w_{j,i}$;

decoding means having an input receiving said program words $w_{j,i}$ and providing a plurality of outputs having control signals thereon;

control lines connected with said plurality of outputs of said decoding means for carrying control signals therefrom;

a plurality of operational means capable of performing arithmetic and logical functions, each said operational means having function-control inputs connected to said control lines, an output connected to the input of one of said registers X and X' to supply resulting data thereto, and inputs multiplexed to the outputs of said registers X, X', and U with said multiplexing being controlled by said control signals carried by said control lines; and

timing means, responsive to said control signals carried by said control lines, for establishing a cycle of operation by clocking said resulting data into said registers X and X', with the termination of each said cycle causing a new program word $w_{j,i}$ to be fed to said input of said decoding means whereby, for each said cycle, new values are simultaneously produced and stored in said registers X and X' as a function of the previous values in said registers X and X', of the values in said registers U, and of the content of program words $w_{j,i}$ fed to said input of said decoding means.

4,374,413

ARBITRATION CONTROLLER PROVIDING FOR ACCESS OF A COMMON RESOURCE BY A PLURALITY OF CENTRAL PROCESSING UNITS

Joseph A. Comfort; Thomas J. Perry, and Michel Loos, all of Phoenix, Ariz., assignors to GTE Automatic Electric Labs Inc., Northlake, Ill.

Filed Jun. 26, 1980, Ser. No. 163,045

The portion of the term of this patent subsequent to Feb. 15, 2000, has been disclaimed.

Int. Cl.³ G06F *13/00, 15/16*

U.S. Cl. 364—200 **9 Claims**

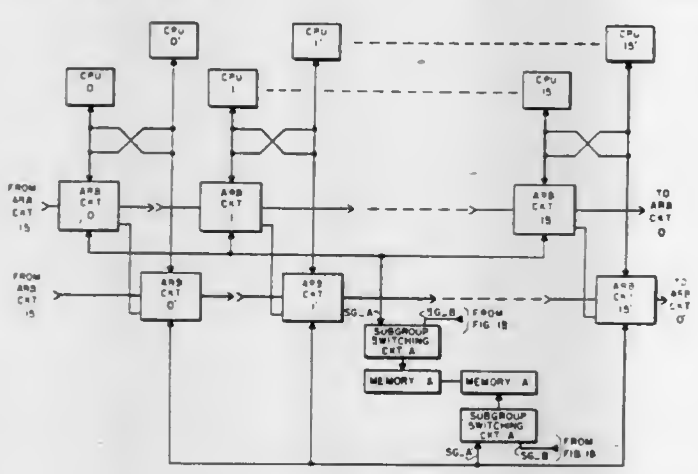

1. An arbitration controller providing for equal priority sharing of a common resource by a plurality of CPUs, said arbitration controller comprising:

a common bus including first and second portions;

switching means operated to provide alternate first and second selection signals;

first and second arbitration groups, each of said groups including:

means for initialization providing a first signal;

a plurality of arbitration circuits including a first, at least one successive and a last arbitration circuit;

said means for initialization connected to at least one of said arbitration circuits;

a plurality of CPU buses, each connected between a particular CPU and said resource via a particular arbitration circuit on a one for one basis, each CPU bus including a control portion and an address/data portion;

said common bus connected between each of said CPUs and said resource via said particular arbitration circuit for the transmission of information between said resource and any of said plurality of CPUs via said address/data portion of said CPU bus;

bus means for connecting each said common bus to each of said plurality of CPU buses in a tri-state fashion;

a plurality of circuit connections including a circuit connection between each arbitration circuit and each successive arbitration circuit, said last arbitration circuit connected to said first arbitration circuit, thereby forming a completed ring connection for propagating said first signal from one arbitration circuit to another arbitration circuit in a circular fashion;

each arbitration circuit operated in response to said first signal and to a common bus request signal from its corresponding CPU to produce a second signal for allowing said corresponding one of said plurality of CPUs access to said resource via said common bus;

each said arbitration circuit including:

first gating means operated to propagate said first signal along said ring connection at a relatively high rate of speed;

latching means operated in response to said common bus request signal of said corresponding CPU to produce said second signal for allowing said CPU to access said resource via said common and CPU buses;

second gating means operated in response to said operated latching means and in response to said propagated first signal to propagate a third signal from each arbitration circuit to each successive arbitration circuit;

said first signal propagating through each of said arbitration circuits in said ring connection to successively enable said CPU access to said resource via said common bus, while said third signal permitting said successive arbitration circuits to establish priority for subsequent access of said resource simultaneously with a present access of said resource; and

said switching means connected between said first and said second portions of said common bus and said resource whereby said first selection signal operates to enable access to said resource from said CPUs of said first portion of said common bus via said corresponding arbitration circuits and said first selection signal operates to inhibit said access from said CPUs of said second portion to said common bus and alternately said second selection signal operates to enable said access from said CPUs of said second portion of said common bus via said corresponding arbitration circuits and said second selection signal operates to inhibit access from said CPUs of said first portion to said common bus.

4,374,414

ARBITRATION CONTROLLER PROVIDING FOR ACCESS OF A COMMON RESOURCE BY A DUPLEX PLURALITY OF CENTRAL PROCESSING UNITS

Joseph A. Comfort; Thomas J. Perry, and Michel Loos, all of Phoenix, Ariz., assignors to GTE Automatic Electric Labs Inc., Northlake, Ill.

Filed Jun. 26, 1980, Ser. No. 163,046

The portion of the term of this patent subsequent to Dec. 7, 1999, has been disclaimed.

Int. Cl.³ G06F *13/00, 15/16*

U.S. Cl. 364—200 **14 Claims**

1. An arbitration controller providing for equal priority sharing of duplicate copy resources by active ones of a plurality of duplicate pairs of CPUs, said arbitration controller comprising:

first and second common buses, each bus including first and second portions;

first and second switching means operated to provide alternate first and second selection signals;

first and second arbitration groups, each of said groups including:

first and second means for initialization, each providing a first signal;

corresponding first and second pluralities of arbitration circuits, each plurality including a first, at least one successive and a last arbitration circuit;

each of said means for initialization connected to at least one of said corresponding plurality of arbitration circuits;

first and second pluralities of CPU buses each bus of each plurality connected between a particular CPU and said resources via a particular arbitration circuit on a one for one basis, each CPU bus including a control portion and an address/data portion;

each of said buses of said first plurality connected to a particular one of said buses of said second plurality and each of said buses of said second plurality connected to a particular one of said buses of said first plurality;

said first and second common buses, each common bus connected between said corresponding plurality of CPUs and a particular one of said duplicate copies of said resource via said corresponding arbitration circuits for the parallel transmission of information between said duplicate common resources and any said active one of said plurality of CPUs via said address/data portion of said corresponding CPU bus;

first and second pluralities of circuit connections, each plurality including a circuit connection between each first arbitration circuit and each successive arbitration circuit, each of said last arbitration circuits connected to said first arbitration circuit of its respective plurality, thereby forming first and second completed ring connections, each of said ring connections propagating a respective one of said first signals synchronously;

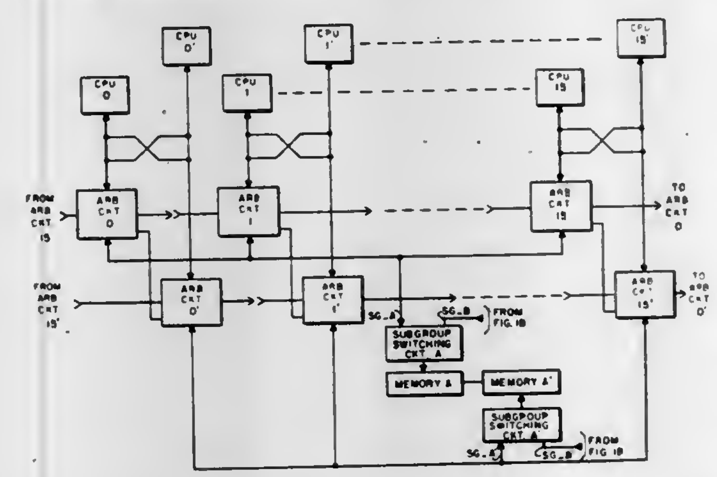

one arbitration circuit of each plurality simultaneously operated in response to its respective first signal and to a common bus request signal from said active CPU, each arbitration circuit producing a second signal for allowing said active CPU to access each of said duplicate copy resources simultaneously via said first and said second common buses respectively;

each of said first signals propagating through each of said corresponding plurality of arbitration circuits to successively enable said active ones of said CPUs to access said duplicate copies of said resource; and

said first switching means connected between said first and second portions of said first common bus and one copy of said resource, said second switching means connected between said first and second portions of said second common bus and said duplicate copy of said resource, whereby said first and second switching means each operates in response to said first selection signal to enable access to a copy of said duplicate copy resources from said arbitration circuits of said first portion of each said common bus and operates to disable said access from said arbitration circuits of said second portion of each common bus and alternately, each said switching means operates in response to said second selection signal to enable said access from said arbitration circuits of said second portion of each said common bus and to disable said access from said arbitration circuits of said first portion of each common bus.

4,374,415

HOST CONTROL OF SUSPENSION AND RESUMPTION OF CHANNEL PROGRAM EXECUTION

Roger L. Cormier, Pleasant Valley; Robert J. Dugan, Hyde Park; Richard R. Guyette, Hopewell Junction, and David H. Wansor, Hyde Park, all of N.Y., assignors to International Business Machines Corp., Armonk, N.Y.

Filed Jul. 14, 1980, Ser. No. 168,876

Int. Cl.³ G06F *3/04*

U.S. Cl. 364—200 **3 Claims**

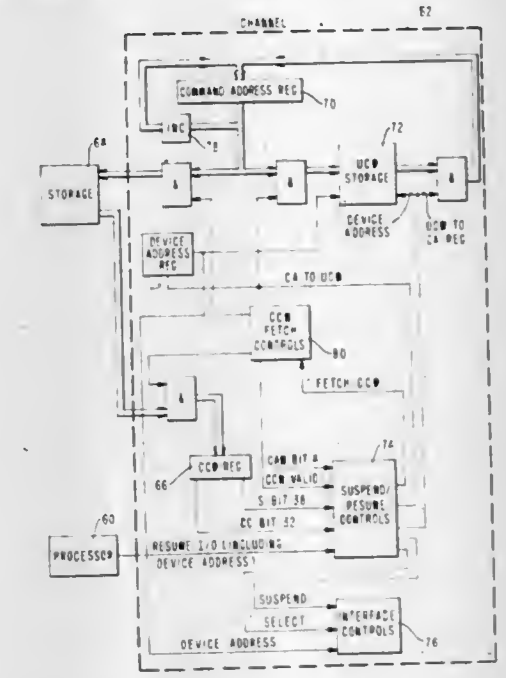

1. In an input/output device control mechanism responsive to a programmed input/output (I/O) instruction such as START I/O executed by a processor to obtain a channel address word (CAW) from a storage unit which provides the location in the storage unit for obtaining the first of a series of channel command words (CCWs) to be executed in sequence by a particular I/O device through a channel and a subchannel of the I/O device control mechanism, the improvement comprising:

suspend means in said control mechanism for causing suspension of the execution of said series of CCW's and for disengaging said device from said channel at any CCW in said series containing a manifestation to so stop execution of said CCWs, said suspend means having disabling means for preventing the suspension in absence of an enabling manifestation in said CAW authorizing said suspension; and

resume means in said control mechanism for causing the resumption of the execution of the series of CCWs at said any CCW at which a suspension occurs said resume means being responsive to a command to said I/O device control mechanism from said processor which command was generated by said processor in response to a programmed instruction to continue execution of said series of CCWs.

4,374,416

LINEAR SEQUENCING MICROPROCESSOR HAVING WORD AND BYTE HANDLING

Robert D. Catiller, Garden Grove, and Brian K. Forbes, Huntington Beach, both of Calif., assignors to Burroughs Corporation, Detroit, Mich.

Continuation-in-part of Ser. No. 52,478, Jun. 27, 1979, Pat. No. 4,301,505. This application Dec. 15, 1980, Ser. No. 216,761

Int. Cl.³ G06F *3/00, 13/00*

U.S. Cl. 364—200 **10 Claims**

1. A microprocessor system which cooperates with an application-dependent logic module to form a universal-type peripheral-controller capable of handling data transfers between a host computer and a plurality of peripheral terminal units which can be either "word-oriented" or "byte-oriented",

and wherein said application-dependent logic module provides external register means having bus connections to said plurality of peripheral terminal units and to said host computer, and wherein said application-dependent logic means further includes an external memory for storage of programs related to control of said peripheral terminal units and for temporary storage of data undergoing transfer, and wherein said application-dependent logic module further includes control logic means for communicating with and controlling said external register means, said external memory and further communicating with a decoder-controller in said microprocessor system, the said microprocessor system comprising:

(a) data processing means including:

(a1) an Arithmetic Logic Unit providing an output to a shift logic circuit and to a byte-swap circuit;

(a2) said shift logic circuit providing output to an I/O bus, said shift logic circuit functioning to rotate one or more bits of a word being processed to the right or to the left;

(a3) said byte swap circuit providing output to said I/O bus, said byte swap circuit functioning to exchange the sequential positions of the higher order byte and the lower order byte of a received two-byte word;

(b) said I/O bus providing connecting lines from said data processing means to said external registers, to said external memory, to an accumulator register means, and to an addressing means;

(c) said addressing means receiving input data from said I/O bus and storing addresses useful for accessing data from an

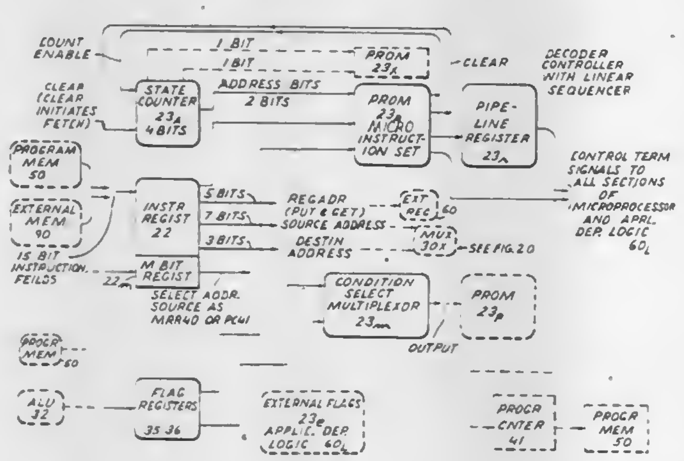

internal program memory or said external memory, said addressing means including:

(c1) a program counter connected to said I/O bus for storing consecutive addresses of data in said internal program memory;

(c2) a memory reference register connected to said I/O bus for storing addresses of data in said external memory, and including:

(c2-1) a memory address bus which connects to said external memory;

(c2-2) and wherein a dedicated non-address bit (byte-select bit) in said memory reference register being set to signal said decoder-controller to initiate a byte-swap operation in said byte-swap circuit, or when not-set, to pass data without a byte-swap operation;

(c2-3) a bus connection from said memory reference register to said decoder-controller;

(c3) address means in said decoder-controller, connecting by means of said I/O bus, to said accumulator register means, said accumulator register means including a plurality of accumulator registers, said address means functioning to select data from an addressed accumulator register;

(d) said internal program memory for storing program instructions and data words, said internal program memory being addressed from said program counter and providing instruction words and data, via an instruction bus, to an instruction register and to a memory operand register;

(e) register means for temporary storage of data, said register means including:

(e1) said accumulator register means which includes a plurality of accumulator registers providing an output to the input of said Arithmetic Logic Unit;

(e2) said memory operand register for receiving operand data from said internal program memory via said instruction bus or from said external memory via a memory data bus and providing an output to the input of said Arithmetic Logic Unit;

(e3) said instruction register for receiving instruction words from said internal program memory storage via said instruction bus and providing said instruction words to said decoder-controller;

(f) said instruction decoder-controller receiving instruction signals from said instruction register, and including incoming and outgoing control signal lines connected to said data processing means, to said addressing means, to said register means, to said internal and external memory means, to said external registers and said control logic means;

(f1) and wherein said decoder-controller further includes:

(f1o) linear sequencing means for selecting microcode instructions for execution in a predetermined sequence, said sequencing means including a microcode instruction memory for storing microcode instructions, said linear sequencing means including:

(f1o-1) a state counter connected to said microcode instruction memory for receiving count control signals from said microcode instruction memory, and for providing a first portion of address signals to said microcode instruction memory;

(f1o-2) input control lines from said instruction register to provide a second portion of address signals to said microcode instruction memory;

(f1o-3) and wherein said microcode instruction memory provides said microcode instructions for the output lines of said decoder-controller in response to said first and second address portions;

(f1a) connection means for receiving control signals from said control logic in said application-dependent logic module for performing clocking, interrupt and halt functions;

(f1b) address lines to said external registers for selecting a specific register;

(f1c) control lines, to said external registers, for strobing address signals;

(g) and wherein said register means, said internal program memory storage, and said external memory are organized into word locations of 16-bits and each word is symbolically designated as AB to indicate the two 8-bit bytes;

(h) and wherein said byte-swap circuit includes means to position a desired byte of data, which is located in the higher order position A of AB, into the lower order position, as BA, to make it available for handling as a single byte of data, said position-swapping of byte-data locations occurring only when said dedicated non-address bit in said memory reference register is SET;

(i) said memory data bus for carrying data from said external memory to said instruction register and said memory operand register.

4,374,417

METHOD FOR USING PAGE ADDRESSING MECHANISM

David J. Bradley, Boca Raton; Dennis D. Gibbs, Lighthouse Point; Donald J. Kostuch, Boca Raton, and James S. Martin, Coral Springs, all of Fla., assignors to International Business Machines Corp., Armonk, N.Y.

Filed Feb. 5, 1981, Ser. No. 231,639

Int. Cl.[3] G06F *9/30*

U.S. Cl. 364—200 14 Claims

1. In a data processing system which executes a series of

fetched program instructions to obtain a desired result and which includes a program counter for providing an address code, random access memory means directly addressable by said program counter, program instruction storage means for storing said program instructions and means for fetching designated program instructions, said program instructions being grouped together in program modules, said program instruction storage means being divided into a plurality of commonly addressable pages, each page including at least one page section, at least one program module having an identification code associated therewith residing in each page section, each page being selectable so that one program instruction in that page is directly addressed by said program counter, whereby that addressed instruction is designated, a method of fetching program instructions from a different program module comprising the steps of:

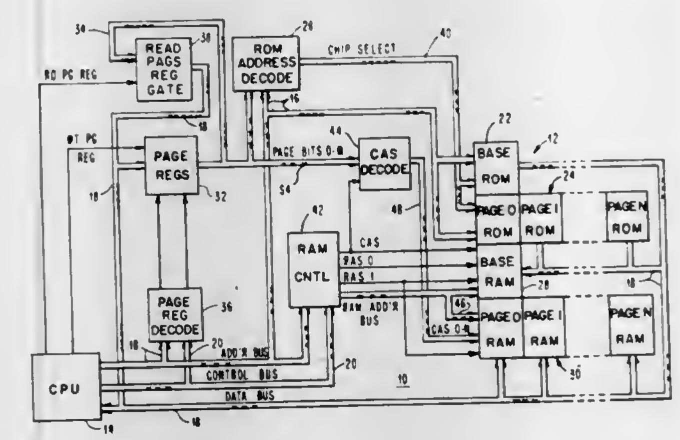

(a) tabulating in a page table for each page section a table of entries, each entry containing one program module identificaton code in that section and a code manifesting the address in that section for that one program module;

(b) scanning each page section table to create a transfer vector table in said random access memory, said transfer vector table being addressed in accordance with the identification code of each program module and including a pointer to the page section in which the program module having said identification code resides;

(c) looking up the pointer for the identification code of said different program module in said transfer vector table;

(d) processing the looked up pointer to obtain the address of said different program module and to select the page in which said different program module resides; and

(e) storing the obtained address in the program counter.

4,374,418

LINEAR MICROSEQUENCER UNIT COOPERATING WITH MICROPROCESSOR SYSTEM HAVING DUAL MODES

Robert D. Catiller, Garden Grove, and Brian K. Forbes, Huntington Beach, both of Calif., assignors to Burroughs Corporation, Detroit, Mich.

Continuation-in-part of Ser. No. 52,479, Jun. 27, 1979, Pat. No. 4,287,560. This application Mar. 5, 1981, Ser. No. 240,867

Int. Cl.[3] G06F *3/04, 9/30, 13/00, 9/00*

U.S. Cl. 364—200 12 Claims

1. A universal-type microprocessor system which cooperates with an application-dependent logic module to form a peripheral-controller capable of handling data transfers between main memory of a host computer and a plurality of peripheral terminal units which can be either "word-oriented" or "byte-oriented", and wherein said application-dependent logic module provides external register means having bus connections to said plurality of peripheral terminal units and to said host computer, and wherein said application-dependent logic module further includes an external memory for storage of programs related to control of said peripheral terminal units and for temporary storage of data undergoing transfer, and wherein said application-dependent logic module further includes control logic means for communicating with and controlling said external register means, said external memory and communicating with a decoder-controller in said microprocessor system, the said microprocessor system comprising:

(a) data processing means including:

(a1) an Arithmetic Logic Unit providing an output to a shift logic circuit and to a byte-swap circuit;

(a2) said shift logic circuit providing output to an I/O bus, said shift logic circuit functioning to rotate one or more bits of a word being processed, to the right or to the left;

(a3) said byte-swap circuit providing output to said I/O bus, said byte-swap circuit functioning to exchange the sequential positions of the higher order byte and the lower order byte of a received two-byte word;

(b) said I/O bus providing connecting lines from said data processing means to said external register means, to said external memory, to an accumulator register means, and to an addressing means;

(c) said addressing means receiving input data from said I/O bus and storing addresses useful for accessing data from an internal memory or said external memory, said addressing means including:

(c1) a program counter storing consecutive addresses of data located in said internal program memory;

(c2) a memory reference register for storing addresses of data located in said external memory, and including:

(c2-1) a memory address bus which connects to said external memory;

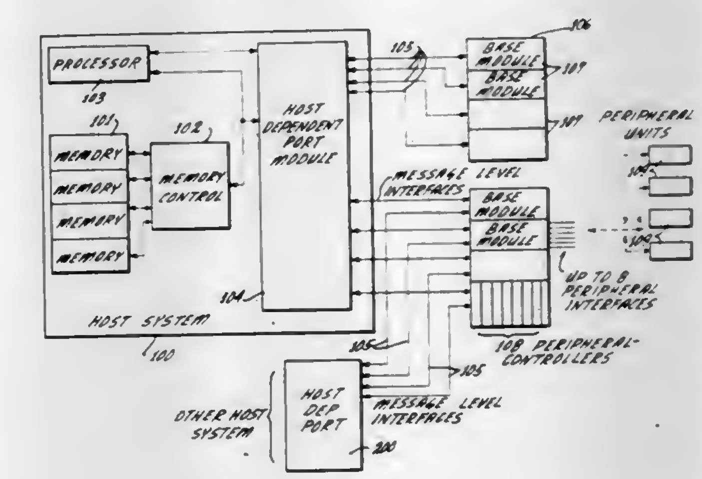

(c2-2) and wherein a dedicated non-address bit in each location in said memory reference register being set to signal said decoder-controller to initiate a byte-swap operation in said byte-swap circuit, or when not-set, to pass data without a byte-swap operation;

(c2-3) a bus connection from said memory reference register to said decoder-controller;

(c3) an address register in said decoder-controller connecting by means of an address bus to said accumulator register means which include a plurality of accumulator registers for selection of data from/to an one of said addressed accumulator registers;

(d) said internal program memory for storing program instruction words and data words, said internal memory being addressed from said program counter and providing instruction words and data, via an instruction bus, to an instruction register and memory operand register, said internal program memory including:

(d1) instruction words wherein each word includes a field (M) which signals said decoder-controller to select either said program counter or said memory reference register as source of the next address;

(e) register means for temporary storage of data, said register means including:

(e1) said plurality of addressable accumulator registers which provide an output to the input of said Arithmetic Logic Unit, said accumulator registers receiving input data words from said I/O bus;

(e2) said memory operand register for receiving operand data from said internal program memory via said instruction bus or from said external memory via a memory data bus;

(e3) said instruction register for receiving instruction words from said internal program memory via said instruction bus or from said external memory via said memory data bus, and providing instruction words to said decoder-controller;

(f) said instruction decoder-controller receiving instruction signals from said instruction register, and including incoming and outgoing control signal lines connected to said data processing means, to said addressing means, to said register means, to said internal and external memory means, to said external registers and said control logic means, said decoder-controller further including:

(f1) means for setting operations into one of two modes wherein a first mode, designated foreground mode, is for normal operations and a second mode, designated background mode, is for interrupt operations;

(f2) linear sequencing means for selecting microcode instructions for execution in a predetermined sequence, said sequencing means including a microcode instruction memory for storing microcode instructions, said linear sequencing means including:

(f2-1) a state counter connected to said microcode instruction memory for receiving count control signals from said microcode instruction memory, and for providing a first portion of address signals to said microcode instruction memory;

(f2-2) input control lines from said instruction register to provide a second portion of address signals to said microcode instruction memory;

(f2-3) and wherein said microcode instruction memory provides said microcode instructions for the output lines of said decoder-controller in response to said first and second address portions;

(f3) connection means for receiving control signals from said control logic in said application-dependent logic module;

(f4) address lines to said external register means for selecting a specific register;

(f5) control lines connected to said external register means for strobing address signals to said external register means;

(g) an external memory data bus for carrying data from said external memory to said instruction register and said memory operand register;

(h) and wherein said plurality of addressable accumulator registers includes:

(h1) a first set of accumulator registers, designated as foreground accumulator registers, for use during normal operations; and

(h2) a second set of accumulator registers, designated as background accumulator registers, for use during interrupt operations;

(i) and wherein said decoder-controller includes: means to select an accumulator register in said first set or said second set according to whether the foreground mode or background mode is operating.

4,374,419
DEVICE FOR DETERMINING A RADIATION ATTENUATION DISTRIBUTION IN A PLANE OF A BODY

Peter W. Lux, Friedrichshafen, Fed. Rep. of Germany, assignor to U.S. Philips Corporation, New York, N.Y.

Filed Jul. 8, 1980, Ser. No. 166,887

Claims priority, application Netherlands, Jul. 6, 1979, 7905282

Int. Cl.[3] A61B *6/00*

U.S. Cl. 364—414 **3 Claims**

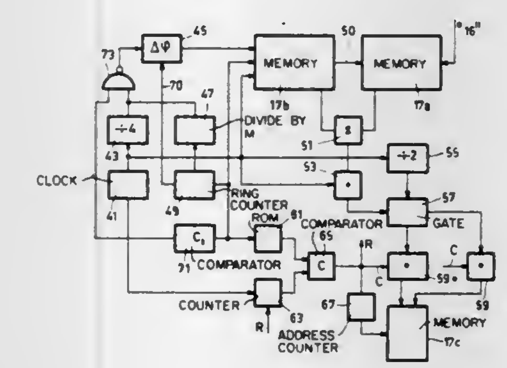

1. In a device for determining a radiation attenuation distribution in a sectional plane of a body comprising:

radiation source means for generating a flat, fan-shaped beam of radiation which is directed in the sectional plane and which penetrates and spans the body;

detector means for detecting radiation from the source means which passes through the body and for supplying groups of measurement signals indicative thereof;

a supporting frame which supports the radiation source means and the detector means;

drive means for moving at least the radiation source means and the supporting frame to irradiate the body from a plurality of directions;

wherein the detector means functions to supply a group of measurement signals for each of said directions, which groups represent radiation attenuation along each of a group of measurement paths which extend fan-wise from the radiation source means; and further including

processing means which function to convolute a group of measurement signals with a series of numbers and to backproject the measurement signals thus convoluted to obtain the distribution of radiation attenuation values in the body;

and memory means, connected to the processing means, which function at least to store the measurement signals and the distribution of attenuation values;

the improvement wherein:

the memory means comprises a first memory for storing attenuation values and a second memory for storing weighting values for use during backprojection of the convolved values, the attenuation values and weighting values being stored, respectively, at locations in the first and second memories which correspond to locations in the sectional plane which are defined by polar coordinates; and wherein the processing means transmits a distance coordinate signal and an angle coordinate signal to the first and second memories which signals function to address locations therein.

4,374,420
METHOD OF ACCURATELY DREDGING A DESIRED PROFILE CONTOUR

Tjako A. Wolters, Zeist, Netherlands, assignor to Ballast-Nedam Groep N.V., Amstelveen, Netherlands

Filed Apr. 28, 1980, Ser. No. 144,650

Claims priority, application Netherlands, May 14, 1980, 7903782

Int. Cl.[3] G05D *1/10;* **E02F** *3/18*

U.S. Cl. 364—424 **7 Claims**

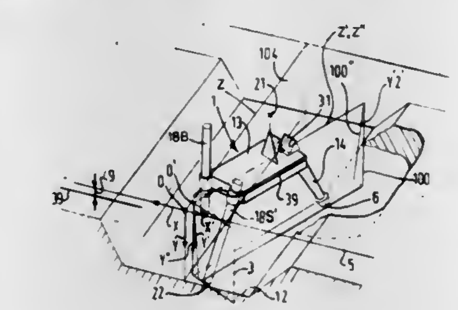

7. The method of dredging which comprises the steps of:

(a) orienting a buoyant cutter dredger hull by means of radio beacons such that the centerline of the hull is substantially located within a vertical plane which defines the Y,Z plane of an X, Y, Z coordinate system with respect to which the depth coordinates Y and side slope coordinates X of a desired profile for a channel are known,

(b) anchoring the hull to define a pivot point whose location is fixed with respect to said Y,Z plane while the hull is oriented as in step (a) and swinging the cutter of the cutter dredger downwardly into engagement with subaqueous ground;

(c) swinging said dredger about said pivot point thereby to swing the cutter in known manner with relation to X, Y, Z coordinate system;

(d) mathematically simulating the cutting envelope of said cutter as at least one imaginary sphere of fixed radius; and

(e) controlling the sideways translation of said cutter to cause the simulated cutting envelope to move into close conformity with said known side slope coordinates of the desired profile for a channel without exceeding the X coordinates thereof.

4,374,421
ANTI SKID CONTROL SYSTEM

Heinz Leiber, Leimen, Fed. Rep. of Germany, assignor to Robert Bosch GmbH, Stuttgart, Fed. Rep. of Germany

Continuation of Ser. No. 19,522, Mar. 12, 1979, abandoned. This application Oct. 27, 1980, Ser. No. 200,632

Claims priority, application Fed. Rep. of Germany, Mar. 18, 1978, 2812000

Int. Cl.[3] G06F *15/20;* **B60T** *8/02*

U.S. Cl. 364—426 **7 Claims**

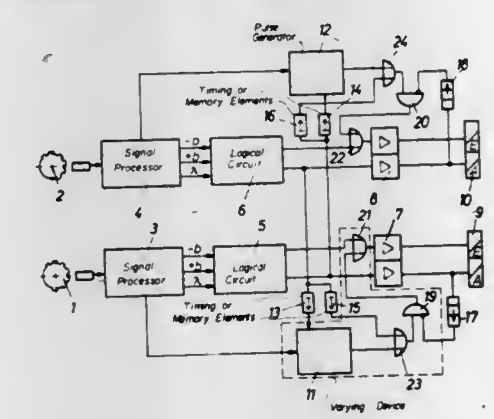

1. An anti skid control system for a wheeled vehicle, comprising:

a pair of brake pressure control channels with one of said pair of brake pressure control channels associated with each opposite wheel on one axle,

each said brake pressure control channel including a wheel speed transducer for generating an output signal related to the rotation of an individual wheel,

each said output signal being applied to a signal processor, said signal processor directing at least one output signal to a logical circuit which produces an output signal which actuates a brake pressure control valve assembly which controls the brake pressure applied to said individual wheel,

each of said brake pressure control channels including means for varying the rate of increase of braking pressure,

the two control channels associated with the wheels on opposite sides of one vehicle axle being interconnected and including means reducing the rate of increase of the braking pressure in the other channel when one of the wheels tends to lock up,

means for varying the reduction of the rate of increase of the braking pressure as a function of vehicle speed, the rate of increase of braking pressure decreases with increasing vehicle speed, and

switching means for initiating a constant pressure phase upon the occurrence of a tendency of one of the wheels to lock up and prior to the switchover to the reduced rate of pressure increase.

4,374,422
AUTOMATIC SPEED CONTROL FOR HEAVY VEHICLES

Patrick J. O'Keefe, Jr., Elyria, Ohio, and Harold E. Weissler, II, Newport News, Va., assignors to The Bendix Corporation, Southfield, Mich.

Filed Oct. 27, 1980, Ser. No. 201,091

Int. Cl.[3] B60K *31/00;* **G06G** *7/70*

U.S. Cl. 364—426 **16 Claims**

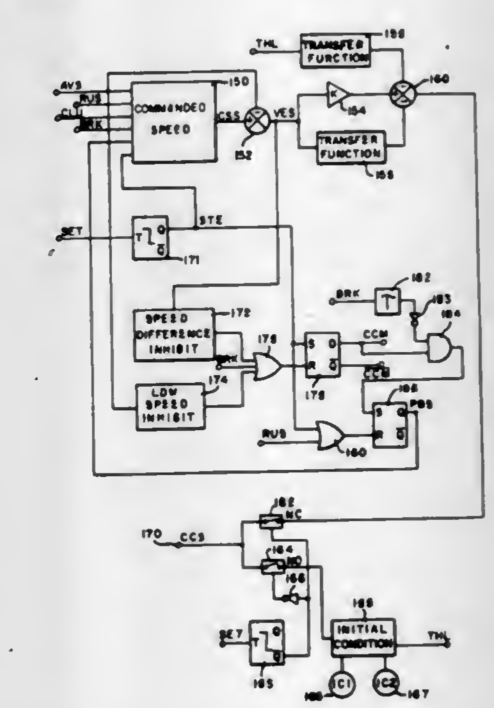

1. An automatic speed control system for a vehicle comprising means for generating a speed error signal proportional to the difference between an actual speed signal and a commanded speed signal; and means for generating a control signal as a function of said speed error signal wherein said control signal positions a throttle member regulating the actual speed of the vehicle to reduce said error signal; said control signal generating means including:

means for generating a proportional error signal dependently upon said speed error signal and of the same sign as said control signal;

means for generating a feedforward error signal of the oppo-

site sign of said control signal which is proportional to the change in the speed error signal;
means for generating a feedback position signal of the opposite sign of said control signal which is proportional to the change in the position of the throttle member; and
means for combining said proportional error signal, said feedforward error signal, and said feedback position signal to form said control signal.

4,374,423
ARRANGEMENT FOR MONITORING A RUDDER CONTROL SYSTEM

Walter Kundler, Hamburg; Reinhold Pientak, Dänischenhagen; Claus Schulz, Altenholz-Klausdorf, and Wolfgang Skerka, Rendsburg, all of Fed. Rep. of Germany, assignors to Anschütz & Co. GmbH, Kiel-Wik, Fed. Rep. of Germany

PCT No. PCT/DE79/00083, § 371 Date Apr. 30, 1980, § 102(e) Date Apr. 30, 1980, PCT Pub. No. WO80/00506, PCT Pub. Date Mar. 20, 1980
PCT Filed Aug. 13, 1979, Ser. No. 193,404
Claims priority, application Fed. Rep. of Germany, Aug. 30, 1978, 2837842
Int. Cl.³ G06F *15/50;* **G05B** *23/02, 11/42*
U.S. Cl. 364—434 **4 Claims**

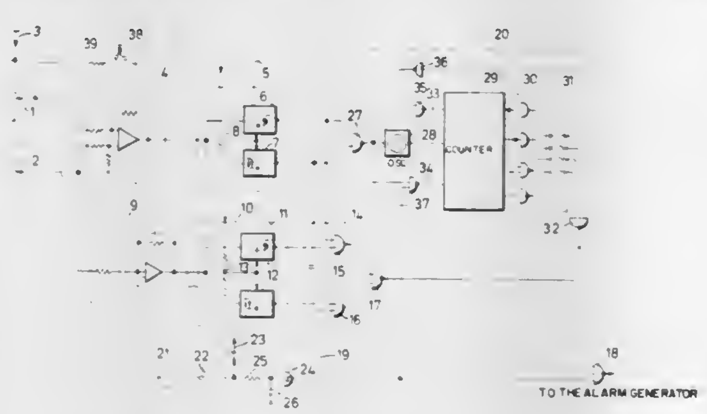

1. Arrangement for monitoring a rudder control system, containing a transmitter for generating a set-point signal corresponding to the respective desired angular position of the rudder and facilities for turning the rudder subsequently to the angular position provided by the set-point signal, the actual angular position of the rudder being picked up by a receiver which supplies a corresponding control-point signal, further containing a first limit circuit (5) to which the difference between the set-point signal and the control-point signal is applied and which supplies an error signal if the applied difference between the set-point signal and the control-point signal exceeds a predetermined limit, a second limit circuit (10), which supplies an error signal corresponding to the turning rate of the rudder, an evaluation circuit (14) to which the output signals of the two limit circuits (5,10) are applied for supplying a drive signal for an alarm generator if two error signals are present, dependent upon an input signal coming from the first (5) and the second (10) limit circuits, and a delay circuit (20) responsive to said first limit circuit for enabling the alarm generator to be triggered by a drive signal, present at the output of the evaluation circuit (14), only after a predetermined period of time has elapsed during which an output has been provided by said first limit circuit, characterized by
the provision of a differentiating circuit (9) to which the control-point signal is applied for producing a signal corresponding to the rate of change of the control-point signal and supplying it to the second limit circuit (10);
the provision in said second limit circuit of two limit elements (11,12), one for producing a first signal when the rate of change of said control point signal in a positive-going direction exceeds a predetermined minimum and otherwise producing a second signal, and the other for producing a first signal when the rate of change of said control-point in a negative-going direction exceeds a predetermined minimum and otherwise producing a second signal;
the provision in said first limit circuit of two limit elements (6,7), one of which (6) supplies an error signal when a positive signal limit is exceeded and the other one (7) of which supplies an error signal when a negative signal limit is exceeded;
provision of a pair of logic circuits (15,16), one for each polarity of error signal, in said evaluation circuit (14) for responding to the presence of an error signal from the limit element of said first limiting circuit relating to said polarity during the presence of said first signal from the limit element of said second limit circuit (10) corresponding to the same polarity;
provision of the error signals of the two limit elements (6,7) also at the same time to an additional logic circuit (27) for supplying an activation signal to the delay circuit (20), and
provision of a final logic circuit (18) for producing an alarm signal in response to the output of said evaluation circuit (14) after the delay circuit (20) has provided a signal to said final logic circuit indicating that said delay circuit has been activated for a predetermined period.

4,374,424
APPARATUS AND METHOD FOR PLOTTING A CHROMATOGRAM

Andre Coustre; Robert Elitzsch, and Jean-Claude Caullier, all of Conflans-Sainte-Honorine, France, assignors to Delsi, Suresnes, France

Filed Nov. 23, 1979, Ser. No. 96,669
Claims priority, application France, Nov. 28, 1978, 78 33607
Int. Cl.³ G01N *31/08*
U.S. Cl. 364—497 **7 Claims**

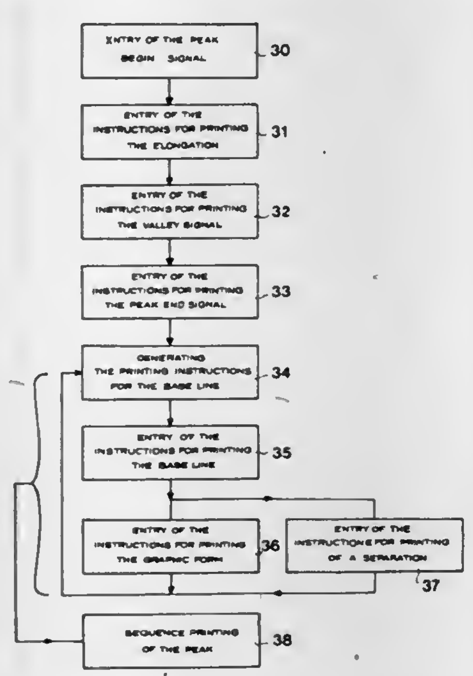

1. A method for displaying a continuous signal having a time varying elongation and including at least one peak provided by an external analysis apparatus, comprising the steps of:
sampling the continuous signal at a plurality of sampling times and determining an elongation value of the continuous signal for each sample;
detecting the starting time and ending time for the peak of the continuous signal;
storing the elongation values for each sample taken from the starting time to the ending time of the peak;
calculating, from the elongation values, baseline data comprising baseline magnitude values corresponding to the sampling times and varying from a baseline value corresponding to the elongation value at the starting time of the peak to a baseline value corresponding to the elongation value at the ending time of the peak; and
generating a printing control signal from the stored data and the calculated baseline data for commanding an external printer to print the elongation values and corresponding baseline data in the form of a graphic.

4,374,425
SINGLE ACTUATOR ELECTRONIC MINICOMPUTER

Louis R. Fuka, 2073 North Rd., Los Alamos, N. Mex. 87544

Filed Jul. 30, 1980, Ser. No. 173,701
Int. Cl.³ G06F *3/02, 15/02*
U.S. Cl. 364—709 **10 Claims**

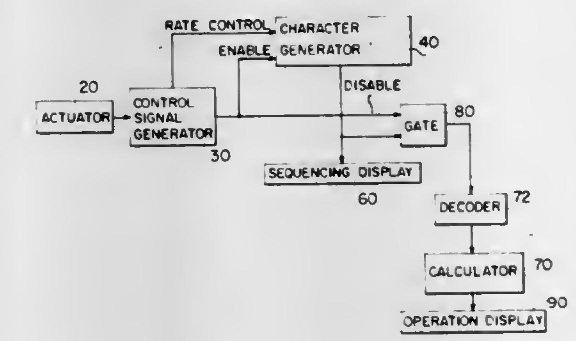

1. A single actuator electronic digital calculator device, comprising a display, electronic sequencing means for providing sequencing of the display through a plurality of characters representing both data and data operations, a digital calculator means for processing data signals in accordance with data operator signals, and a single switch means controlled by the operator of the device for, in a first state thereof, actuating said electronic sequencing means so as to provide sequencing of said display and for, in a second state thereof, deactivating said sequencing means to provide selection of a said character and for causing entry of a digitally encoded signal representing the selected character into said calculator means, said electronic sequencing means comprising character generator means for, when actuated, generating a said plurality of characters on a continuous, cyclic basis, and said display comprising an electronic display means, responsive to said character generator means, for displaying said characters in sequence on a continuous cyclic basis when said character generator means is actuated, said device further comprising a single actuator for actuating said switch means, said actuator, in a first state thereof, causing switching of said switch means to the first state of said switch means and, in a second state thereof, causing switching of said switch means to said second state of said switch means, and means responsive to said single actuator for controlling the sequencing rate of said electronic sequencing means over a continuous spectrum of rates.

4,374,426
DIGITAL EQUALIZER FOR HIGH SPEED COMMUNICATION CHANNELS

Donald W. Burlage, 823 Tannahill Dr., Huntsville, Ala. 35802, and Ronald C. Houts, 389 Woodland Hills, Tuscaloosa, Ala. 35405

Filed Nov. 14, 1980, Ser. No. 207,045
Int. Cl.³ G06F *15/31*
U.S. Cl. 364—724 **5 Claims**

1. A digital equalizer for high-speed communication channels comprising: a shift register having an input adapted for receiving a binary data signal and providing a plurality of separate and distinct outputs therefrom in response to said binary data input; summing means having a plurality of inputs and an output; a plurality of multiplexers; and a plurality of AND gates, said AND gates being coupled respectively between said multiplexers and respective outputs of said shift register for providing a gated or controlled output from each of said respective shift register outputs to said multiplexers; each of said AND gates having a first input coupled to a respective shift register output and having a second input adapted for receiving a controlling signal input to initiate passage of register data to said multiplexers; and said multiplexers being coupled between preselected sequential outputs of said AND gate outputs and said summing means inputs, each of said multiplexers having a plurality of inputs and a single output and disposed for sequentially receiving a selected num-

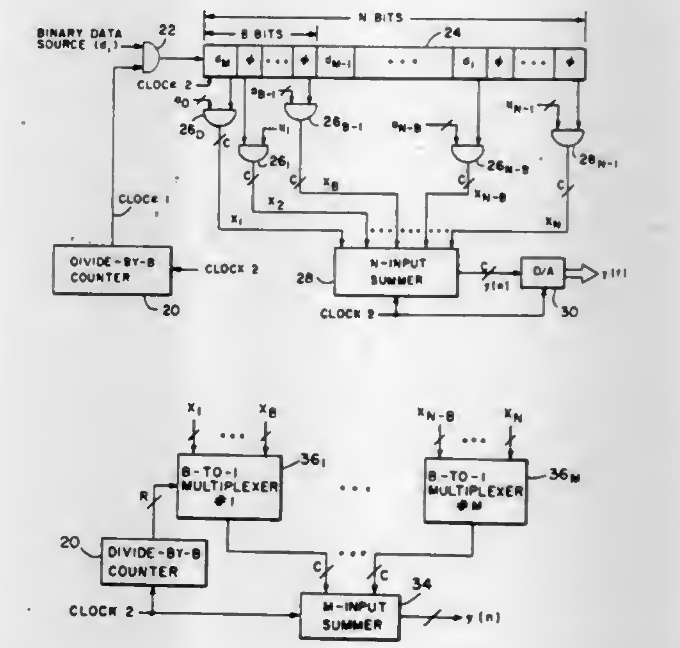

ber of said AND gate outputs indicative of signals received for a predetermined timed interval, each AND gate having a single output coupled to provide a single input to a multiplexer, said multiplexers outputs being coupled to said summing circuit.

4,374,427
DIVISOR TRANSFORM TYPE HIGH-SPEED ELECTRONIC DIVISION SYSTEM

Aisuke Katayama, 2-47, Kawamotomutsumicho, Akita-shi, Akita, Japan

Continuation of Ser. No. 179,702, Aug. 20, 1980, abandoned. This application Oct. 7, 1980, Ser. No. 194,838
Claims priority, application Japan, Aug. 25, 1979, 54-107670
Int. Cl.³ G06F *7/52, 7/544*
U.S. Cl. 364—761 **17 Claims**

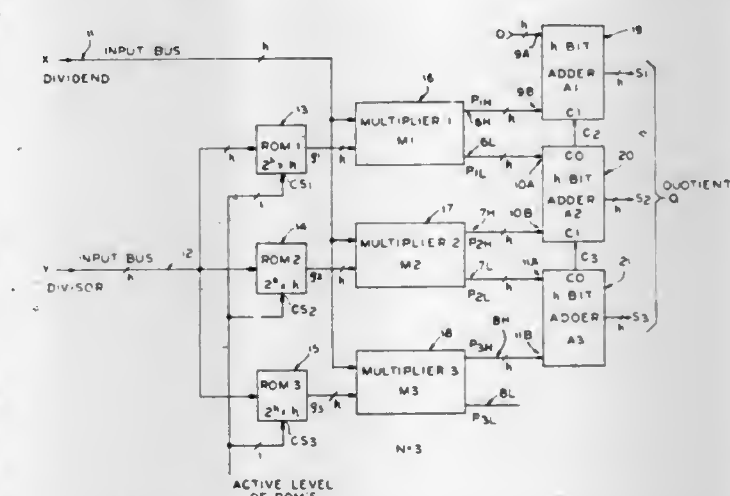

1. An electronic division system comprising means for transforming an input divisor signal into a given number of integers, said given number being a number selected on a basis of a desired accuracy index, means for separately multiplying each of said given number of transformed divisor signals by a dividend signal to produce said given number of multiplication products, and means comprising said given number of adders for adding at least some of the products of said multiplication

to produce a quotient signal which is equal to a quotient of said dividend divided by said divisor.

4,374,428
EXPANDABLE FIFO SYSTEM
Kerry B. Barnes, Collingswood, N.J., assignor to RCA Corporation, New York, N.Y.
Filed Nov. 5, 1979, Ser. No. 91,526
Int. Cl.³ G11C *9/00, 9/02, 21/00*
U.S. Cl. 364—900 **9 Claims**

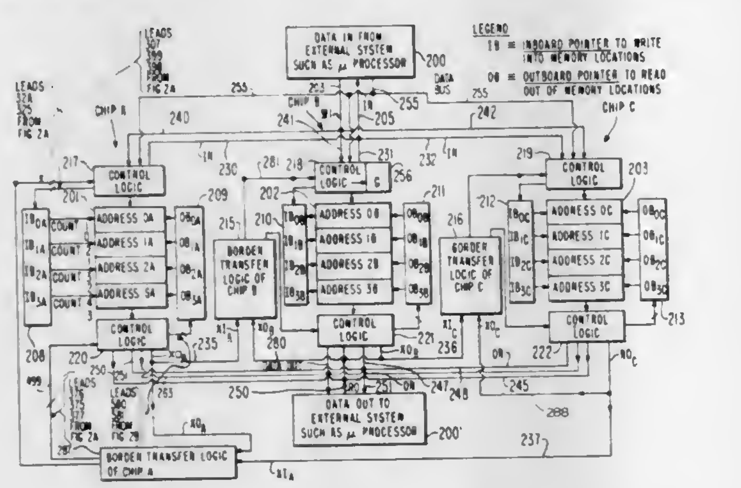

1. A FIFO system comprising an exandable number N of FIFO chips arranged to form a ring of identical FIFO chips connected in an identical manner and with each FIFO chip comprising:

a RAM memory having N word storage locations;

inboard pointing means which, when activated, points to, and directs the writing of words into, successive ones of said word storage locations with each word remaining in its word storage location until read out of the FIFO system;

outboard pointing means which, when activated, points to, and directs the reading of words from, successive ones of said word storage locations;

first control means responsive to the presence or absence of a word in the last word location in the RAM memory in any given FIFO chip to produce a first signal $XO_n=1$ or a second signal $XO_n=0$, respectively;

second control means responsive to the presence or absence of a word in the last word location in the RAM memory in the FIFO chip immediately preceding said given FIFO chip in the ring of FIFO chips to produce a third signal $XO_{n-1}=1$ and a fourth signal $XO_{n-1}=0$, respectively;

border transfer logic means resident in said each FIFO chip and connecting said each FIFO chip with the immediately preceding FIFO chip in said ring of FIFO chips

and responsive to the presence of a word in the last word location in said preceding FIFO chip RAM memory ($XO_{n-1}=1$) to activate said inboard printing means in said given FIFO chip only when $XO_n=0$ and to deactivate said inboard pointing means in said given FIFO chip when $XO_n=1$ and further responsive to the absence of a word in the last word location in said preceding FIFO chip RAM memory ($XO_{n-1}=0$) to activate said outboard pointing means in said given FIFO chip when $XO_n=1$, and to deactivate said outboard pointing means in said given FIFO chip when $XO_n=0$.

4,374,429
INFORMATION TRANSFER SYSTEM WHEREIN BIDIRECTIONAL TRANSFER IS EFFECTED UTILIZING UNIDIRECTIONAL BUS IN CONJUNCTION WITH KEY DEPRESSION SIGNAL LINE
Jack W. Cannon, Boca Raton; Bradley D. Herrman, Pompano Beach, and Ramiro Ramirez, Jr., Boca Raton, all of Fla., assignors to International Business Machines Corporation, Armonk, N.Y.
Filed Jun. 27, 1980, Ser. No. 163,601
Int. Cl.³ G06F *3/00*
U.S. Cl. 364—900 **8 Claims**

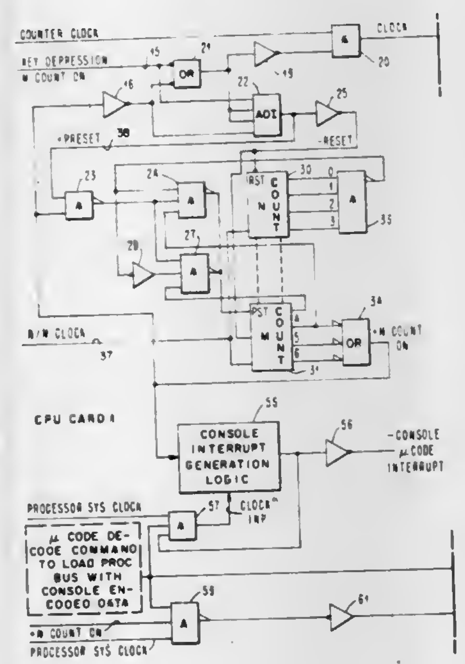

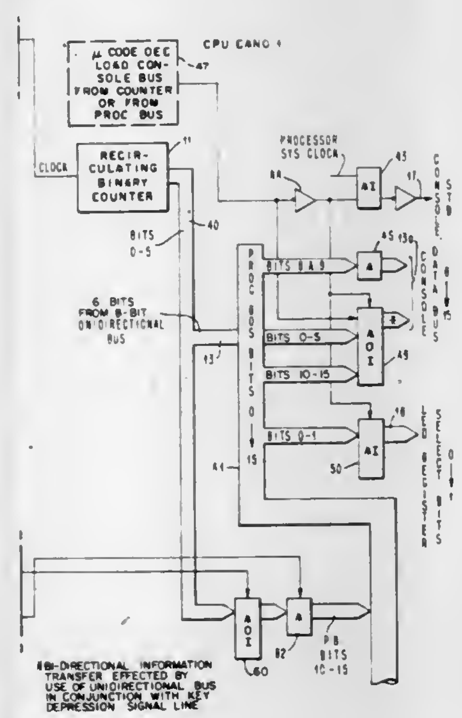

1. An information transfer system, said system utilizing digital data to represent information, said digital data being represented by coded characters, said system incorporating a central processing unit having facilities for processing said digital data and for supplying digital data processor output signals indicative of status information and the like and responding to digital data input signals in said system, and said system requiring transfer of said digital data in both an output direction from said central processing unit and in an input direction to said central processing unit, said central processing unit having a processor bus for transferring digital data in said system, said system comprising:

a device externally located from said central processing unit, said device being activatable to selectively provide a predetermined number of distinct digital data signals for input to said central processing unit and said device further comprising a selectively operable advisory unit, said advisory unit being responsive to digital data output signals from said central processing unit to provide advisory information;

a device data bus for receiving and transferring digital data from said central processing unit in an output direction only;

counter means incorporated in said central processing unit and operable in a count mode and a stop mode, said counter means being operable responsive to a start signal to provide a count sequence of digital data signals corresponding in number and code configuration to the predetermined number of distinct digital data input signals provided by said device, and said counter means being operable responsive to a stop signal to provide signals representative of the digital data signals that are active when said counter means is stopped;

data transfer bus means operable in a first mode for interconnecting said counter means to said device data bus for transfer of counter signals to said device and operable in a second mode for interconnecting said processor bus to said device data bus for transfer of processor output signals to said device, said data transfer bus means having bus drive means to drive said device data bus so that digital data from said counter means in said first mode and from said processor bus in said second mode is transferred via said device data bus in an output direction only from said central processing unit to said device, thereby making said device data bus unavailable for transfer of digital data in an input direction from said device to said central processing unit;

comparator means in said device, said comparator means being operable to compare the count sequence of digital data signals received from said counter means via said device data bus when said counter means is in a count mode and said data transfer bus means is in said first mode of operation and digital data signals provided by said device when activated, respectively, and said comparator means having a single input signal line interconnected from said device to said counter means in said central processng unit and said comparator means being further operable to provide an input signal via said single input signal line to change the state of said counter means from a count mode to a stop mode when digital data signals from said counter means and digital data signals from said device are identical whereby said counter means is stopped in a count state representative of a particular one of said distinct digital data signals currently activated at said device thereby accomplishing transfer of the digital data from said device in an input direction to said central processing unit by utilizing only said single input signal line and whereupon the state of said counter means and accordingly the identity of the particular one of said distinct digital data signals currently activated can be determined by said central processing unit;

advisory selection and operating means responsive to digital data signals supplied by said central processing unit via said processor bus and said device data bus when said data transfer bus means is in said second mode of operation for selectively operating said advisory unit in accordance with status information and the like from said central processing unit.

4,374,430
SEMICONDUCTOR PROM DEVICE
Mitsuo Higuchi, Tokyo, Japan, assignor to Fujitsu Limited, Kawasaki, Japan
Filed Nov. 26, 1980, Ser. No. 210,675
Claims priority, application Japan, Nov. 26, 1979, 54-152832
Int. Cl.³ G11C *11/40*
U.S. Cl. 365—104 **6 Claims**

1. A semiconductor PROM device operatively connected to receive input address signals, a high potential voltage, and a programming signal, comprising:

a plurality of word lines;

a plurality of word address decoders organized in blocks and operatively connected to respective of said word lines, each of said word address decoders including:

a decoder section for receiving said input address signals and for selecting said respective word line in accordance with said input address signals; and

a high potential voltage supplying section, for receiving and providing said high potential voltage, including

a first transistor which is connected between a respective one of said word lines and said high potential voltage and which is turned on in dependence upon said programming signal; and

a second transistor which is connected between an output terminal of said decoder section and said respective one of said word lines,

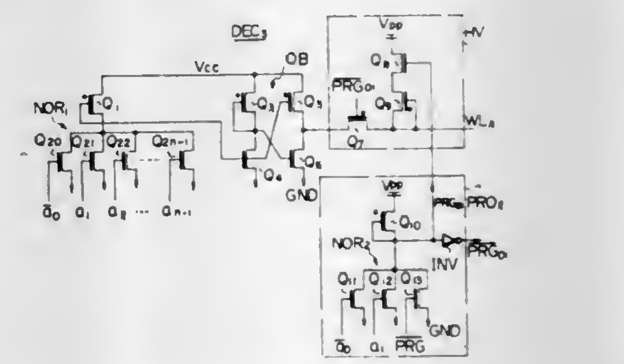

a plurality of gated program signal generators, operatively connected to respective ones of said blocks of word address decoders, for receiving specified signals of said input address signals and for generating a gated program signal for selecting said respective ones of said blocks of word address decoders, each of said blocks comprising one or more of said word address decoders associated with said specified signals of said input address signals, and said gated program signal corresponding to said programming signal being applied to the gate electrode of said first transistor of said respective word address decoder having input address signals including said specified signals of the input address signals received by said gated program signal generator.

4,374,431
I²L SEMICONDUCTOR MEMORY CIRCUIT DEVICE
Chikai Ono, Kawasaki, and Kazuhiro Toyoda, Yokohama, both of Japan, assignors to Fujitsu Limited, Kawasaki, Japan
Filed Nov. 26, 1980, Ser. No. 210,678
Claims priority, application Japan, Nov. 28, 1979, 54/154025; Nov. 30, 1979, 54/155340
Int. Cl.³ G11C *11/40*
U.S. Cl. 365—174 **23 Claims**

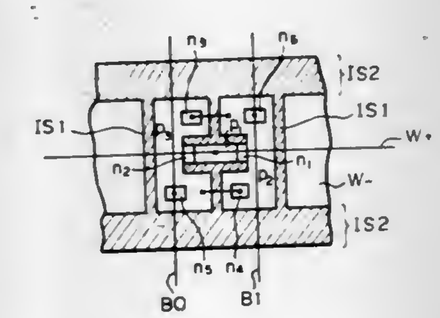

1. A semiconductor memory device fabricated on a bulk semiconductor base having parasitic capacitance, comprising:

a plurality of memory-cell arrays, each of the memory-cell arrays extending in a first direction and including a plurality of IIL (integrated injection logic) memory cells for storing data arranged in the first direction, the memory-

cell arrays being arranged with a specified pitch in a second direction perpendicular to the first direction;

word line pairs arranged in the first direction, each pair having first and second word lines, and each word line having a selection and non-selection status and each of the second word lines comprising said bulk;

the memory-cell arrays respectively, operatively connected to a corresponding one of said pairs of word lines;

a plurality of pairs of bit lines extending in the second direction and operatively connected to each of said plurality of memory cell arrays;

hold-current sources respectively, operatively connected to a corresponding one of said second word lines, for holding the data stored in the IIL memory cells;

at least one discharging path, operatively connected to each of the second word lines; and

constant-current sources, operatively connected to said discharging path, for providing a discharging current, in accordance with said parasitic capacitance existing in the bulk and along the word lines, for the second word lines changing from said selection status to said non-selection status, said parasitic capacitance being discharged through the constant-current source via the discharging path.

4,374,432

READ SYSTEMS FOR 2½D COINCIDENT CURRENT MAGNETIC CORE MEMORY

Bernard A. Kenner, Rancho Palos Verdes, and John R. Conaway, San Jose, both of Calif., assignors to Electronic Memories and Magnetics Corporation, Encino, Calif.

Filed May 29, 1979, Ser. No. 42,796

Int. Cl.³ G11C *5/08, 7/02, 11/06*

U.S. Cl. 365—209 **14 Claims**

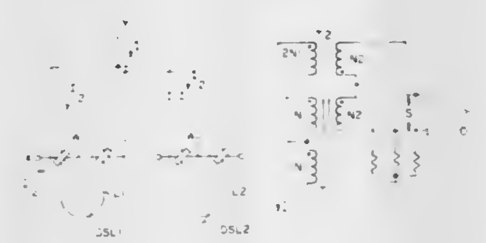

1. In a coincident current magnetic core memory comprised of an array of toroidal cores, each core having a bit line driven by half select current and a word select line driven by half select current, an organization for cancellation of crosstalk produced in the bit drive signal on a selected bit line by a drive pulse in a word select line prior to amplification of a bit signal on the selected bit line comprising the arrangement of an unselected bit line physically parallel to the selected bit line for approximately the same inductive and capacitive coupling of a word drive pulse from the word select line, and subtracting means for subtracting the signal coupled into the unselected bit line from the signal coupled into the selected bit line by the word select pulse, wherein said selected bit line and said unselected bit line are paired bit select lines connected to receive bit select current from a controlled source and selectively connected by bit select switching means to conduct half select current to one terminal of said subtracting means, only one of said pair of bit select lines being selected to conduct bit select current to said subtracting means, and switching means for automatically connecting said unselected line to the other terminal of said subtracting means for conduction of bit select current at a level significantly reduced below the half select level of current to the one terminal of said subtracting means.

4,374,433

STEREO PICKUP WITH PRINTED CIRCUIT COILS MOUNTED IN A LINEAR FIELD

Hiroshi Ogawa, Yokohama; Kazuhiro Sato; Norio Shibata, both of Sagamihara; Katsuhiko Oguri, Fujisawa; Masayoshi Utida, Yokohama, and Tsuyoshi Ono, Yamato, all of Japan, assignors to Victor Company of Japan, Ltd., Kanagawa, Japan

Continuation of Ser. No. 923,943, Jul. 11, 1978, abandoned. This application Feb. 19, 1980, Ser. No. 122,261

Claims priority, application Japan, Jul. 13, 1977, 52-92817[U]; Jul. 13, 1977, 52-92818[U]; Jul. 13, 1977, 52-92820[U]; Jul. 13, 1977, 52-92821[U]; Jul. 25, 1977, 52-99240[U]

Int. Cl.³ H04R *9/16, 9/04*

U.S. Cl. 369—136 **8 Claims**

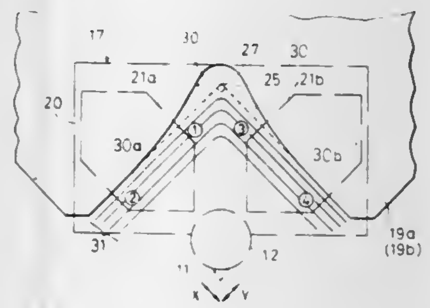

1. A moving-coil type stereo pickup cartridge, comprising, a vibration system including a stylus for tracing a sound groove of a record disc; at least one coil plate provided in said vibration system to vibrate in response to vibrations of said stylus; and means for forming a magnetic field for said coil plate, said coil plate comprising a thin insulative substrate and a pair of left and right coils substantially symmetric with respect to a center line of said coil plate, said coils being formed by an electrically conductive thin film in a spirally wound pattern on at least one surface of said substrate, and said magnetic field forming means comprising a permanent magnet piece and a pair of yoke pieces clamping said permanent magnet piece, said pair of yoke pieces having surfaces at the ends thereof for defining a gap therebetween in which said coil plate is interposed and a cutout recessed in each of said ends of said yoke pieces with a configuration having a substantially inverted V-shape, each of said ends of said yoke pieces having an edge for defining said cutout, the shape of said edge being configured and dimensioned to form the contour lines of magnetic flux density of leakage magnetic flux within the space defined by said cutout and passing through said coils to extend in a substantially linear direction and substantially parallel to each other.

4,374,434

VIDEO DISC STYLUS CARTRIDGE WITH PROTECTIVE MEMBER

Donald T. Hatin, Indianapolis, Ind., assignor to RCA Corporation, New York, N.Y.

Filed Sep. 24, 1980, Ser. No. 190,274

Int. Cl.³ G11B *3/46*

U.S. Cl. 369—170 **4 Claims**

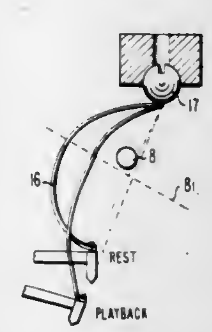

1. In a record playback cartridge assembly of the type comprising: a cartridge body, a stylus arm mounted within said cartridge body; a pickup stylus mounted on one end of said arm, the other end of said arm being compliantly coupled to said cartridge body; and an elongated electrically conductive spring-like flylead member, connected at one end thereof to said cartridge body and at the other end thereof to a certain point in the vicinity of said stylus for coupling electrical signals representing recorded information during record playback, said flylead normally assuming a bow-like shape extending away from the end connections of said flylead and toward said other end of said arm, said flylead being subject to disturbance of said bow-like shape during handling of said cartridge at times other than when said cartridge is positioned for record playback, the improvement comprising:

a stop member formed from an electrically non-conductive material and connected between two opposing walls within the confines of said cartridge body on the side of said flylead bow-like shape toward said one end of said arm in the vicinity of but non-contacting with said flylead member for preventing the inversion of said bow-like shape of said flylead during handling of said cartridge, said stop member being positioned so as not to touch said flylead at any time during record playback.

4,374,435

PASSENGER ENTERTAINMENT SYSTEM TRANSDUCER FAILURE DETECTOR

Richard F. Lach, Hartford, Conn., and Richard W. Calcasola, Longmeadow, Mass., assignors to United Technologies Corporation, Hartford, Conn.

Filed Dec. 23, 1980, Ser. No. 219,740

Int. Cl.³ H04J *3/14*

U.S. Cl. 370—13 **9 Claims**

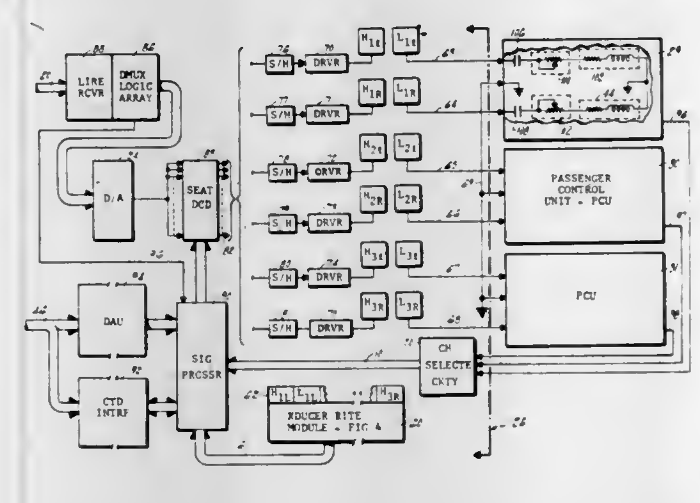

1. Transducer BITE sensor for providing signal manifestations, to the BITE circuitry of a passenger entertainment system (PES), of the response of the audio transducers and associated driver amplifiers of one or more PES headsets to an audio test signal presented to each headset amplifier driver individually during a PES transducer BITE test routine, comprising:

voltage sensing means, connected to the signal output of each driver amplifier for sensing the peak-to-peak amplitude of the output voltage signal response of each amplifier to the presentation of the audio test signal, as an indication of the driver amplifier operation, and for providing for each amplifier under test a voltage BITE signal manifestation indicative thereof to the PES BITE circuitry; and

current sensing means, connected to the signal output of each driver amplifier, for sensing the presence of a current signal component in the output signal response of each driver amplifier to the presentation of the audio test signal, as an indication of the related audio transducer operation, and for providing for each transducer under test a current BITE signal manifestation indicative thereof to the PES BITE circuitry.

4,374,436

SYSTEM FOR THE MONITORING AND RESTORATION OF SERIES TERMINALS IN A LOOPED COMMUNICATION SYSTEM

Thomas R. Armstrong, Largo, Fla., assignor to Paradyne Corporation, Largo, Fla.

Filed Oct. 17, 1980, Ser. No. 198,234

Int. Cl.³ G06F *11/20*

U.S. Cl. 371—11 **5 Claims**

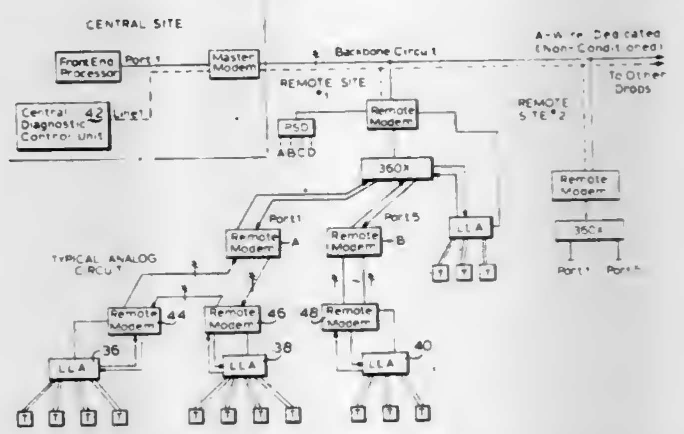

1. A local loop adapter system for selectively disconnecting a terminal from a loop of interconnecting terminals, comprising:

a controller and

a plurality of switch assemblies each having incoming connecting means, on which data is received from a first terminal;

terminal connecting means on which data is sent to and received from a second terminal;

outgoing connecting means on which data is sent to a third terminal switching means which on command from the controller allows either data from said incoming connecting means to go to said second terminal, and allows data from said second terminal to go to said outgoing connecting means, or

allows data from said incoming connecting means to go directly to said outgoing connecting means, ignoring all data receiving from said second terminals; and

control means provided to operate the switching means on command from said controller.

4,374,437

VARIABLE RAMP SPEED TV TUNING SYSTEM FOR RAPID CHANNEL TUNING

Richard W. Citta, Portland, Oreg., and Scott L. Falater, Melbourne, Fla., assignors to Zenith Radio Corporation, Glenview, Ill.

Filed Dec. 29, 1980, Ser. No. 220,619

Int. Cl.³ H04B *1/16;* **H04N** *5/50;* **H03J** *7/06*

U.S. Cl. 455—164 **5 Claims**

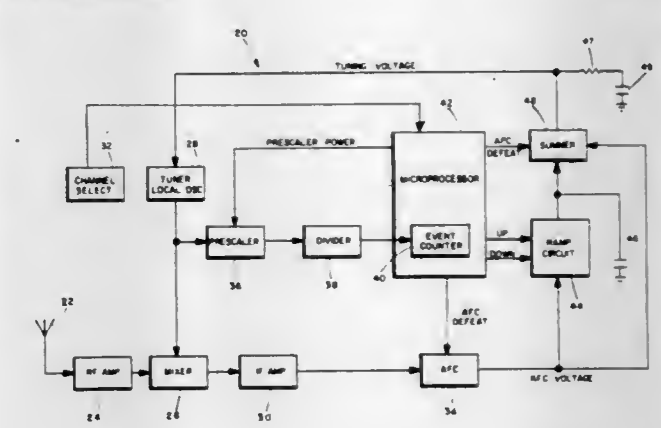

1. In a signal seeking television tuning system including tuning means for developing a local oscillator signal, channel

selector means for providing signals representative of a selected VHF, UHF or CATV television channel to said tuning means, mixer means for combining said local oscillator signal with a received television signal in generating an intermediate frequency signal, automatic frequency control means coupled to said mixer means for detecting the video components of said intermediate frequency signal and for locking said tuning means to the carrier frequency of said received television signal, a system for providing a tuning voltage to said tuning means comprising:

frequency divider means coupled to said tuning means for generating a divided-down local oscillator signal;

variable, programmable counter means coupled to said frequency divider means for receiving and measuring the frequency of said divided-down local oscillator signal with a given frequency measuring resolution;

counter control means coupled to said programmable counter means for changing the frequency measuring resolution of said programmable counter, said counter control means including:

loading means for sequentially providing a plurality of control inputs to said programmable counter means with the counting interval of said counter means changed in response thereto, wherein each successive counting interval is of increasing duration; and

clock generator means for applying a clock pulse train to said counter means during each of said counting intervals, the duration of each of said counting intervals determining the frequency measuring resolution of said counter means, with the frequency measuring resolution of said counter means increasing with increasing counting interval duration;

programmable comparator means coupled to said counter means for comparing the divided-down local oscillator signal frequency with a predetermined frequency representing a selected channel and for generating a tuning voltage correction signal representing the difference between said frequencies; and

variable ramp voltage generating means coupled to said comparator means and to said tuning means for receiving said tuning voltage correction signal, developing a tuning voltage signal in response thereto, and providing said tuning voltage signal to said tuning means in ramping said divided-down local oscillator signal toward said predetermined frequency representing the selected television channel at a given ramping rate, the ramping rate of said ramp voltage generating means being successively decreased in a step-wise manner when the frequency difference between said local oscillator signal and said received television signal is within the frequency measuring resolution of said counter means in rapidly tuning said television receiver to said selected channel.

4,374,438
DIGITAL FREQUENCY AND PHASE LOCK LOOP
Albert T. Crowley, Gloucester Township, Camden County, N.J., assignor to RCA Corporation, New York, N.Y.
Filed Jul. 21, 1980, Ser. No. 170,999
Int. Cl.[3] H04B *1/16;* H03L *7/08;* G01S *9/56*
U.S. Cl. 455—265 **5 Claims**

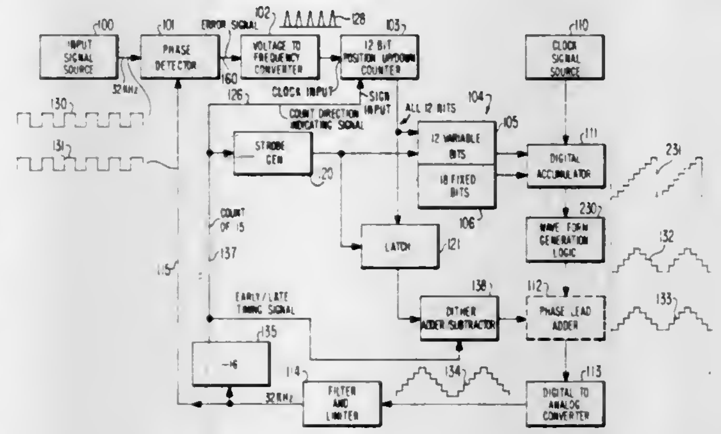

1. In a communication system including phase locked loop means for phase locking a locally generated signal with a cyclical portion of a received signal and comprising:

signal value producing means comprising an accumulator, an input register containing a variable value and means including a clock signal source for enabling supply of said variable value to said accumulator at the frequency of said clock signal, with said accumulator being responsive to said variable value being supplied thereto to produce a series of output values representative of a frequency of said locally generated signal;

signal processing means responsive to said series of output values to produce said locally generated signal;

logic means responsive to said locally generated signal and said cyclical portion of said receiver signal to produce an error voltage indicative of the phase difference therebetween and to produce a periodic two level signal;

voltage to frequency converting means for converting said error voltage into a count control signal whose frequency is proportional to said error voltage;

up/down counter means responsive to said count control signal and to said two level periodic signal to count at a rate equal to the frequency of said control signal and in a direction determined by said two level periodic signal to provide a variable output count value; and

means responsive to said periodic two level signal for altering the variable value contained in said input register to correspond to said variable output, count value of said up/down counter means.

DESIGN PATENTS

GRANTED FEB. 15, 1983

ERRATA

For CLASS	See PATENT NO.
D23–138	267,924

DESIGNS

FEBRUARY 15, 1983

267,908
STUFFED FOOD PRODUCT
Carl Lomauro, 200 Harding Ave., Clifton, N.J. 07011
Continuation-in-part of Ser. No. 873,985, Apr. 20, 1978. This application Nov. 5, 1979, Ser. No. 91,320
Term of patent 14 years
Int. Cl. D01—*04*
U.S. Cl. D1—2

267,909
LINK FOR BRASSIERES
Gerhard Fildan, Kriehubergasse 31, A-1050 Vienna, Austria
Filed Feb. 1, 1980, Ser. No. 117,524
Term of patent 14 years
Int. Cl. D2—*07*
U.S. Cl. D2—409

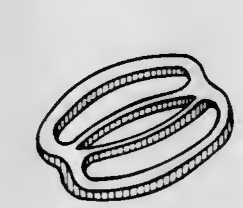

267,910
CASING FOR A CONTACT LENS CASE
Michael D. Thomas, and Francis E. Ryder, both of Arab, Ala., assignors to Ryder International Corporation, Arab, Ala.
Filed Nov. 17, 1980, Ser. No. 207,265
Term of patent 14 years
Int. Cl. D3—*02*
U.S. Cl. D3—34

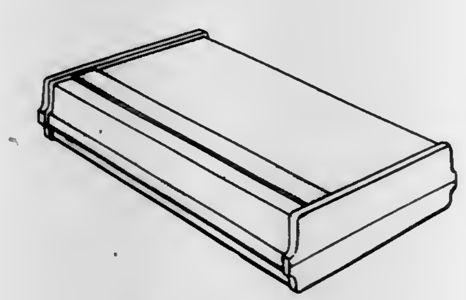

267,911
DISKETTE STORAGE CONTAINER
Jerry M. Long, Ben Lomond, and James A. Womack, Livermore, both of Calif., assignors to Innovative Concepts, Inc., Los Gatos, Calif.
Filed Oct. 1, 1979, Ser. No. 80,417
Term of patent 14 years
Int. Cl. D3—*02*
U.S. Cl. D3—35

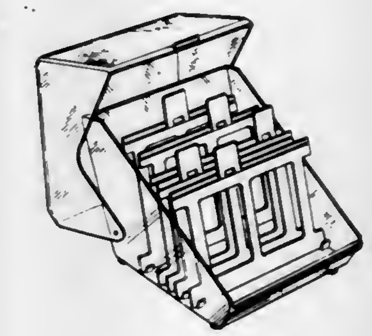

267,912
DINING CHAIR
Karl Rausch, Im Rosengartle 15, 7500 Karlsruhe-Durlach, Fed. Rep. of Germany
Filed Jul. 11, 1980, Ser. No. 167,529
Term of patent 14 years
Int. Cl. D6—*01*
U.S. Cl. D6—74

267,913
CHAIR
Mike T. Claman, New York, N.Y., assignor to Lewittes Furniture Enterprises, Inc., New York, N.Y.
Filed Jul. 10, 1980, Ser. No. 168,209
The portion of the term of this patent subsequent to Aug. 15, 1986, has been disclaimed.
Term of patent 3½ years
Int. Cl. D6—*01*
U.S. Cl. D6—78

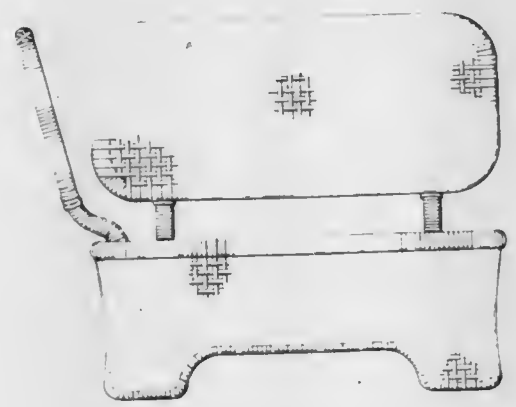

267,914
RACK FOR HOLDING STEMWARE GLASSES
Richard A. Lin, 16530 Drexel Ave., South Holland, Ill. 60473
Filed Sep. 15, 1980, Ser. No. 187,195
Term of patent 14 years
Int. Cl. D6—*04*; D7—*99*
U.S. Cl. D6—113

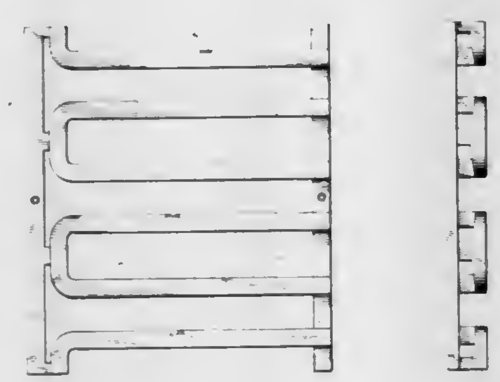

267,915
MIRRORED HUTCH OR SIMILAR ARTICLE
Sidney A. Lenger, Jr., Jamestown, N.C., assignor to The Singer Company, Stamford, Conn.
Filed Sep. 12, 1980, Ser. No. 186,815
Term of patent 14 years
Int. Cl. D06—*04*
U.S. Cl. D6—153

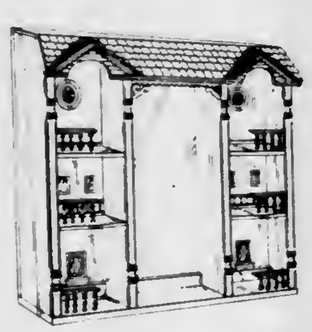

267,916
CHEST OF DRAWERS OR SIMILAR ARTICLE
Sidney A. Lenger, Jr., Jamestown, N.C., assignor to The Singer Company, Stamford, Conn.
Filed Sep. 12, 1980, Ser. No. 186,821
Term of patent 14 years
Int. Cl. D06—*04*
U.S. Cl. D6—154

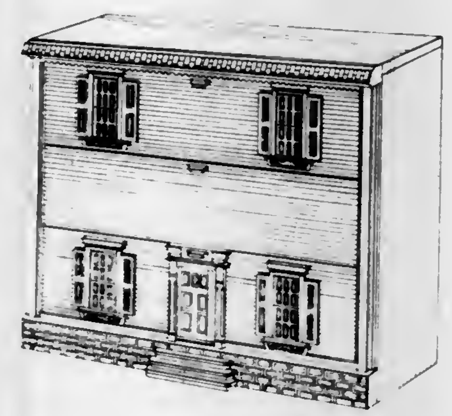

267,917
PISTOL CABINET
Adaire M. Faldmo, and Robert Faldmo, both of 1528 Wagon Wheel Cir., Salt Lake City, Utah 84070
Filed Nov. 3, 1980, Ser. No. 203,126
Term of patent 14 years
Int. Cl. D06—*04*
U.S. Cl. D6—181

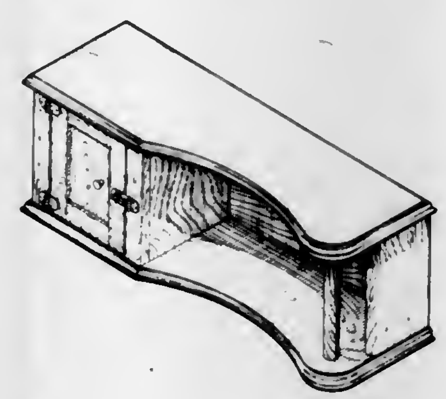

267,918
PAPER BALING RACK
George D. Lasher, 612 E. Shields, Fresno, Calif. 93704
Filed Sep. 12, 1980, Ser. No. 186,685
Term of patent 14 years
Int. Cl. D6—*04*
U.S. Cl. D6—184

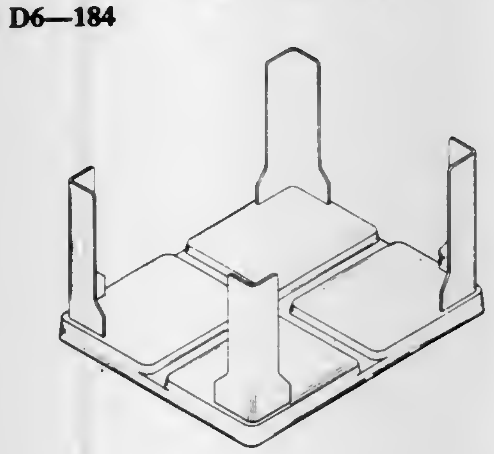

267,919
HANGER
Georgette Owens, 165½ Lower Via Casitas, Greenbrae, Calif. 94904
Filed Sep. 29, 1980, Ser. No. 192,048
Term of patent 14 years
Int. Cl. D6—*08*
U.S. Cl. D6—247

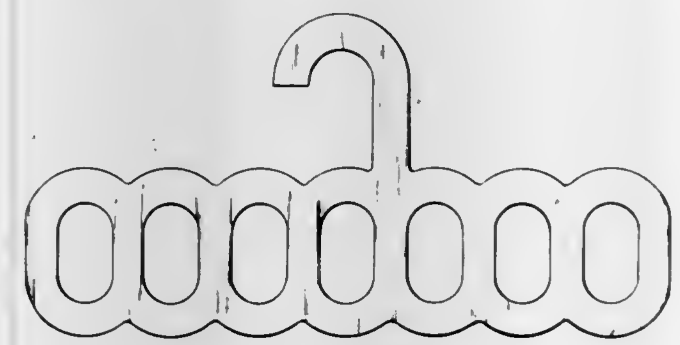

267,920
GARMENT HANGER BODY
John H. Batts, East Grand Rapids, and Everett L. Duester, Zeeland, both of Mich., assignors to John Thomas Batts, Inc., Zeeland, Mich.
Filed Aug. 15, 1980, Ser. No. 178,552
Term of patent 14 years
Int. Cl. D6—*08*
U.S. Cl. D6—254

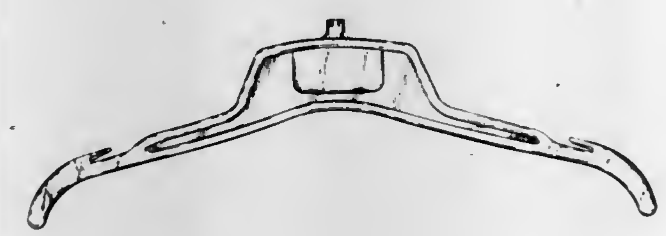

267,921
GARMENT HANGER
John H. Batts, East Grand Rapids, Mich., assignor to John Thomas Batts, Inc., Zeeland, Mich.
Continuation of Ser. No. 140,109, Apr. 14, 1980, abandoned. This application Feb. 17, 1982, Ser. No. 349,658
Term of patent 14 years
Int. Cl. D6—*08*
U.S. Cl. D6—254

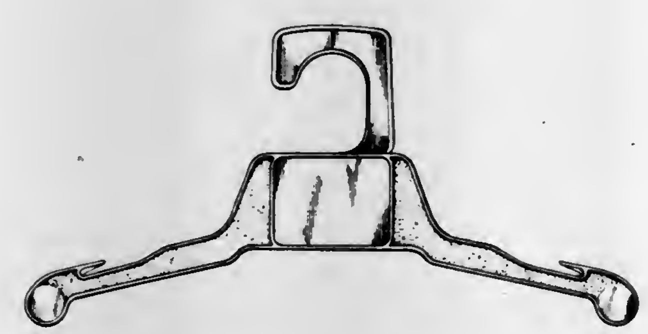

267,922
COMBINED COOKING PLATE, DRIP PAN TRAY AND SUPPORT STAND
Riccardo Schweizer, Via Roma, 41, Mezzano Di Primiero (Province of Trento), Italy
Filed Jul. 28, 1980, Ser. No. 172,500
Claims priority, application Italy, Jan. 29, 1980, 30627 B/80
Term of patent 14 years
Int. Cl. D7—*02, 99*
U.S. Cl. D7—363

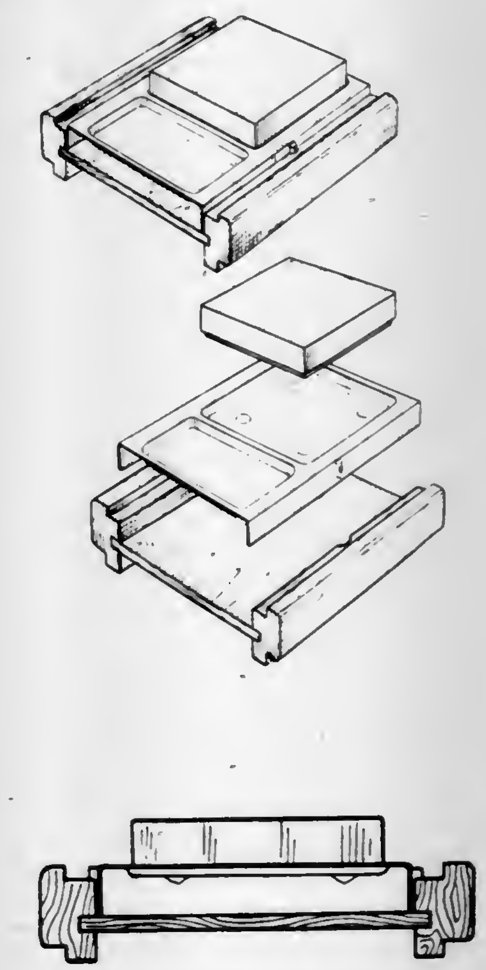

267,923
MICROWAVE OVEN
Kenichi Haruguchi; Takao Miyake; Masafumi Numano, and Kazuo Tsujimoto, all of Osaka, Japan, assignors to Sharp Corporation, Osaka, Japan
Filed Jul. 21, 1980, Ser. No. 170,705
Claims priority, application Japan, Feb. 4, 1980, 55-3692
Term of patent 14 years
Int. Cl. D7—*02*
U.S. Cl. D7—351

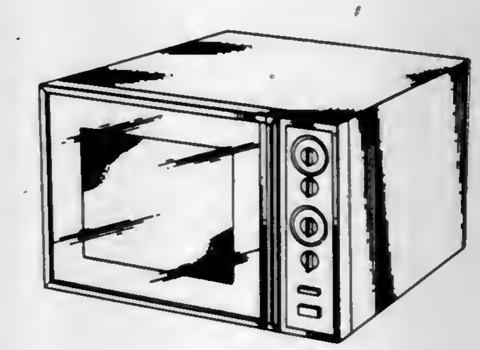

267,924
FIREPLACE TOOL HOLDER
Benjamin A. Rhoades, Rte. 1, Box 126, Arroyo Grande, Calif. 93420
Filed Sep. 12, 1980, Ser. No. 186,711
Term of patent 14 years
Int. Cl. D7—*08*
U.S. Cl. D23—138.2

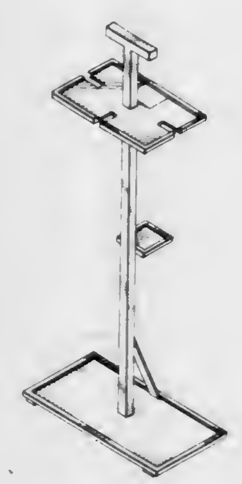

267,925
COMBINED BOTTLE OPENER AND CAN OPENER
Martin R. La Mancusa, 11 Guise Dr., Munroe Falls, Ohio 44262
Filed Jan. 22, 1981, Ser. No. 227,161
Term of patent 14 years
Int. Cl. D7—*099*
U.S. Cl. D8—18

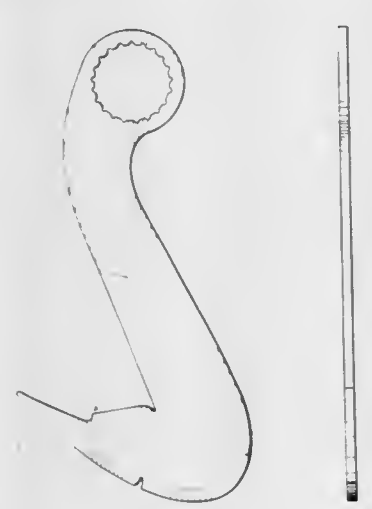

267,926
PULL
Teresa R. B. Pittenger, Rockford, Ill., assignor to Amerock Corporation, Rockford, Ill.
Filed Dec. 24, 1980, Ser. No. 219,818
Term of patent 14 years
Int. Cl. D8—*06*
U.S. Cl. D8—318

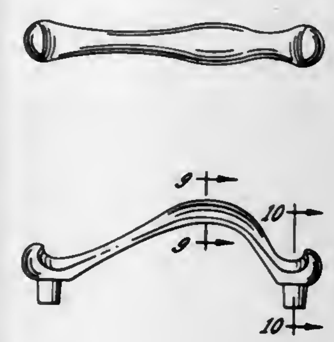

267,927
DISPENSING CONTAINER
Robert C. Smith, Short Hills, N.J., assignor to Unette Corporation, Parsippany, N.J.
Filed Feb. 23, 1981, Ser. No. 237,099
Term of patent 14 years
Int. Cl. D9—*05*
U.S. Cl. D9—302

267,928
PACKAGING CONTAINER
William T. Bianchi, 3439 1st Ave., #5, Sacramento, Calif. 95817
Filed Feb. 20, 1981, Ser. No. 236,450
Term of patent 14 years
Int. Cl. D9—*01*
U.S. Cl. D9—329

267,929
FOOD CONTAINER
Roland Torterotot, Longvilliers, France, assignor to Etudes Realisations de Chaines Automatiques, France
Filed Oct. 30, 1980, Ser. No. 202,252
Term of patent 14 years
Int. Cl. D9—*03*
U.S. Cl. D9—370

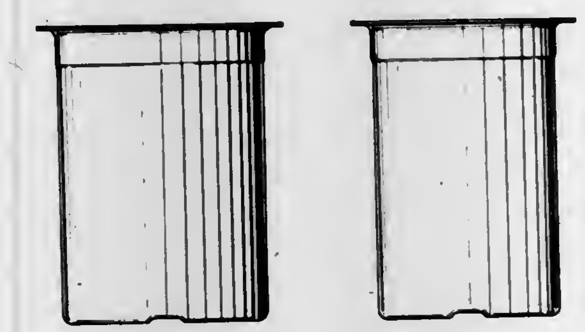

267,930
CHILD-SAFE ACTUATOR FOR PRESSURIZED CONTAINER
Robert E. Corba, Racine, Wis., assignor to S. C. Johnson & Son, Inc., Racine, Wis.
Continuation-in-part of Ser. No. 786,750, Apr. 11, 1977, Pat. No. 4,171,758. This application Mar. 26, 1979, Ser. No. 23,876
Term of patent 14 years
Int. Cl. D09—*07*
U.S. Cl. D9—448

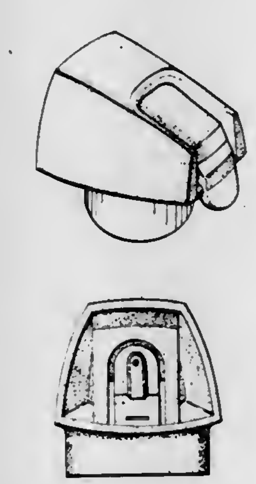

267,931
PENDANT WATCH
Jean-Claude Schwab, Savagnier, and Rene Bannwart, La Chaux de Fonds, both of Switzerland, assignors to Corum, Ries, Bannwart & Co., Switzerland
Filed Apr. 21, 1980, Ser. No. 141,799
Claims priority, application Switzerland, Oct. 22, 1979, 69476/79
Term of patent 14 years
Int. Cl. D10—*02*
U.S. Cl. D10—39

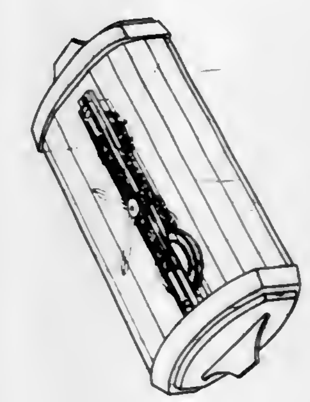

267,932
PROTRACTOR
Fahim R. Sidrak, 4649 Norwich Rd., Wilmington, N.C. 28405
Filed Jan. 26, 1981, Ser. No. 228,692
Term of patent 14 years
Int. Cl. D10—*04*
U.S. Cl. D10—65

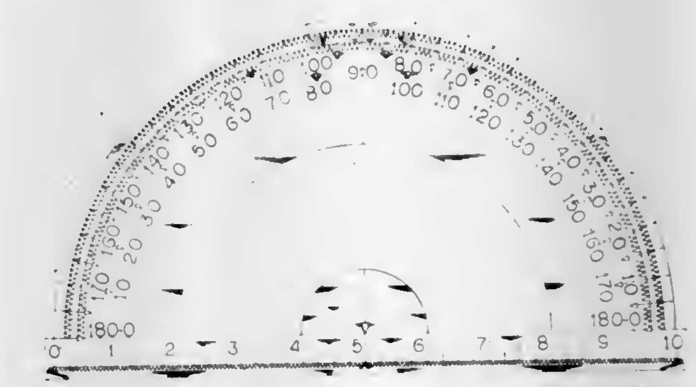

267,933
ROADWAY MARKER
Harold R. Luckinbill, Deerfield, Ill., assignor to Amerace Corporation, New York, N.Y.
Filed Jan. 30, 1981, Ser. No. 230,122
Term of patent 14 years
Int. Cl. D10—*06*
U.S. Cl. D10—113

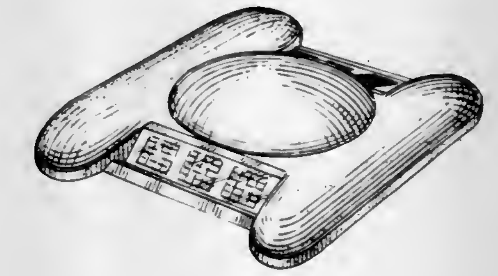

267,934
DRAGON SCULPTURE
Jean W. Heap, Gwynedd, Wales, assignor to Pendelfin Studios Limited, Lancashire, England
Filed Feb. 19, 1981, Ser. No. 235,779
Claims priority, application United Kingdom, Aug. 19, 1980, 80/996199
Term of patent 14 years
Int. Cl. D11—*02*
U.S. Cl. D11—162

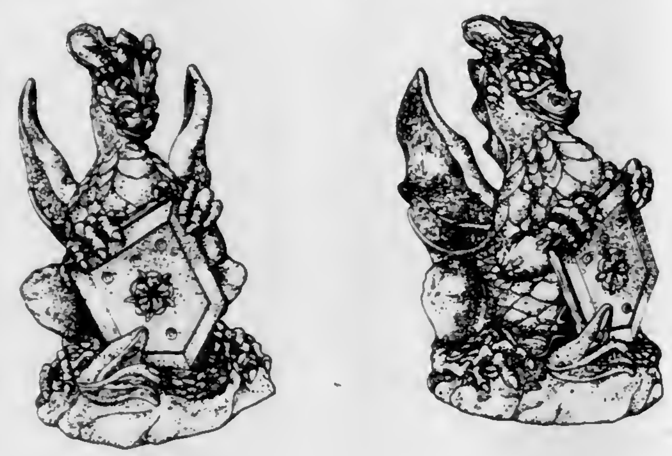

267,935
FIRE TRUCK CREW CAB
Frederick A. Robinett, and James M. Shook, both of San Jose, Calif., assignors to FMC Corporation, Chicago, Ill.
Filed Sep. 23, 1980, Ser. No. 189,876
Term of patent 14 years
Int. Cl. D12—*13*
U.S. Cl. D12—13

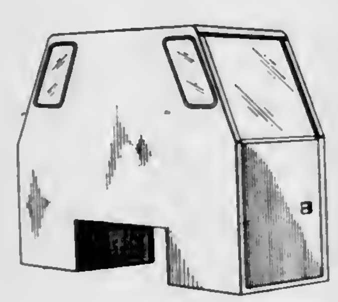

267,936
VEHICULAR VAN BODY
Walter D. Jannell; Howard N. McIntosh, both of Cumberland, and Edward J. O'Bar, Harrisville, all of R.I., assignors to Jannell & Son Body Company, Woonsocket, R.I.
Filed Dec. 29, 1980, Ser. No. 220,987
Term of patent 14 years
Int. Cl. D12—*08*
U.S. Cl. D12—96

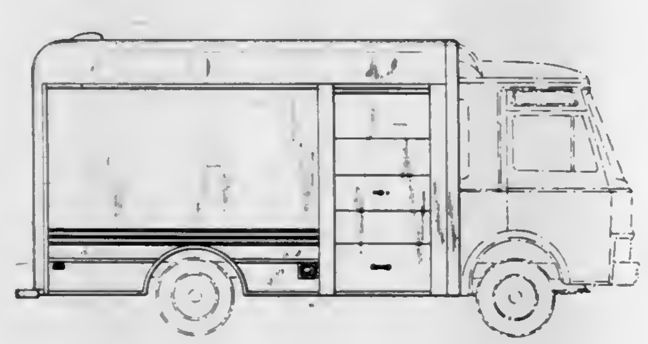

267,937
MOTOR VEHICLE TRAILER
John R. Conroy, Highland, Wis. 53543, and Russell A. Mayne, Blue River, Wis. 53518
Filed Sep. 25, 1980, Ser. No. 190,556
Term of patent 14 years
Int. Cl. D12—*10*
U.S. Cl. D12—102

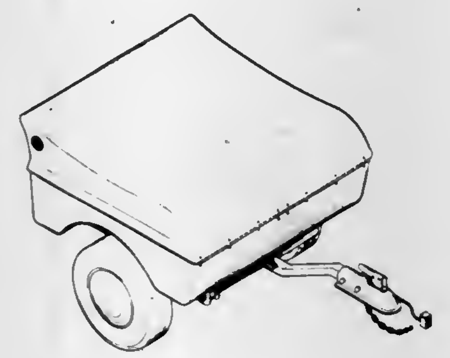

267,938
TIRE
Philippe Grenie, Clermont-Ferrand, France, assignor to Compagnie Generale des Etablissements Michelin, Clermont-Ferrand, France
Filed Dec. 22, 1980, Ser. No. 218,690
Claims priority, application France, Jun. 26, 1980, 8033
Term of patent 14 years
Int. Cl. D12—*15*
U.S. Cl. D12—147

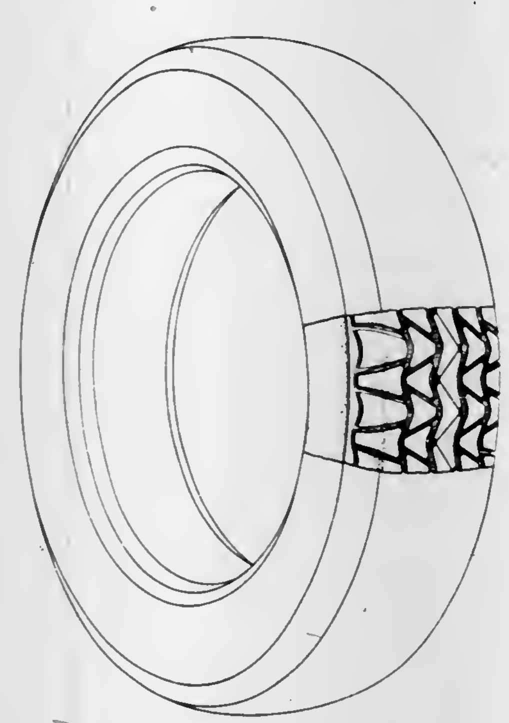

267,939
WINDSHIELD WIPER
Pierre G. Duvoux, Ballainvilliers, France, assignor to Equipements Automobiles Marchal, Issy-les-Moulineaux, France
Filed Aug. 13, 1980, Ser. No. 177,714
Claims priority, application France, Feb. 19, 1980, 800407
Term of patent 14 years
Int. Cl. D12—*16*
U.S. Cl. D12—155

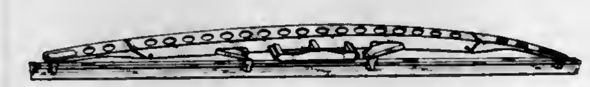

267,940
WINDSHIELD WIPER
Pierre G. Duvoux, Ballainvilliers, France, assignor to Equipements Automobiles Marchal, Issy-les-Moulineaux, France
Filed Aug. 13, 1980, Ser. No. 177,716
Claims priority, application France, Feb. 19, 1980, 800407
Term of patent 14 years
Int. Cl. D12—*16*
U.S. Cl. D12—155

267,941
AUTOMOTIVE WHEEL
Charles W. Lombard, 1116 Belle Meadows Way, Salt Lake City, Utah 84121
Filed Jan. 12, 1981, Ser. No. 224,214
Term of patent 14 years
Int. Cl. D12—*16*
U.S. Cl. D12—209

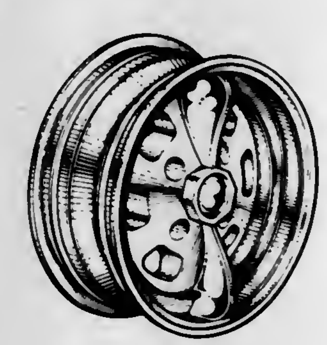

267,942
HEAT-SINK FOR ELECTRONIC SEMICONDUCTOR DEVICES
Alfred F. McCarthy, Belmount, N.H., assignor to Aavid Engineering, Inc., Laconia, N.H.
Filed Nov. 21, 1980, Ser. No. 208,924
Term of patent 14 years
Int. Cl. D13—*03*
U.S. Cl. D13—23

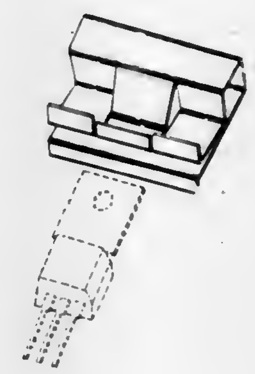

267,943
CONICAL DOUBLE END CAP FOR USE WITH A CABLE SPLICE CASE
William J. Seim, Roseville, and Ronald C. Houts, Vadnais Heights, both of Minn., assignors to Minnesota Mining and Manufacturing Company, St. Paul, Minn.
Filed Nov. 17, 1980, Ser. No. 207,254
Term of patent 14 years
Int. Cl. D13—*03*
U.S. Cl. D13—24

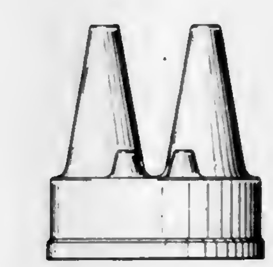

267,944
CONTROL PANEL
Constantine Vintzel, Brighton, and George H. McDaniel, Northville, both of Mich., assignors to The Bendix Corporation, Southfield, Mich.
Filed Mar. 2, 1981, Ser. No. 239,290
Term of patent 14 years
Int. Cl. D13—*03*
U.S. Cl. D13—35

267,945
VIDEO TELEVISION RECEIVER
Osamu Sawaya, Tokyo, Japan, assignor to Nippon Interphone Co. Ltd., Tokyo, Japan
Filed Aug. 18, 1980, Ser. No. 179,267
Claims priority, application Japan, Feb. 22, 1980, 55-6552
Term of patent 14 years
Int. Cl. D14—*03*
U.S. Cl. D14—54

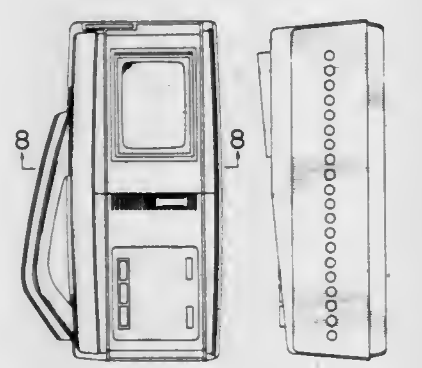

267,946
FACSIMILE TRANSCEIVER
Mikio Kosako, and Katsuhiro Ishida, both of Osaka, Japan, assignors to Sharp Corporation, Osaka, Japan
Filed Sep. 18, 1980, Ser. No. 188,381
Claims priority, application Japan, Mar. 22, 1980, 55-11428
Term of patent 14 years
Int. Cl. D14—*01, 02, 03*
U.S. Cl. D14—94

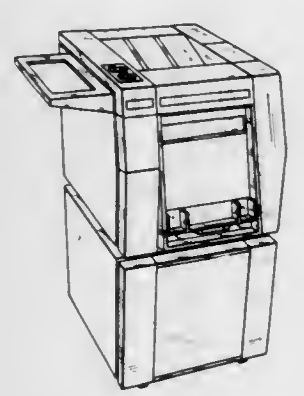

267,947
PORTABLE FACSIMILE TRANSMITTER
Bernd Helling, Old Bridge; Michael S. Zarro, Lakewood, and David G. Rutherford, Marlboro, all of N.J., assignors to The Associated Press, East Brunswick, N.J.
Filed Jan. 22, 1981, Ser. No. 227,543
Term of patent 14 years
Int. Cl. D14—*01, 03*
U.S. Cl. D14—94

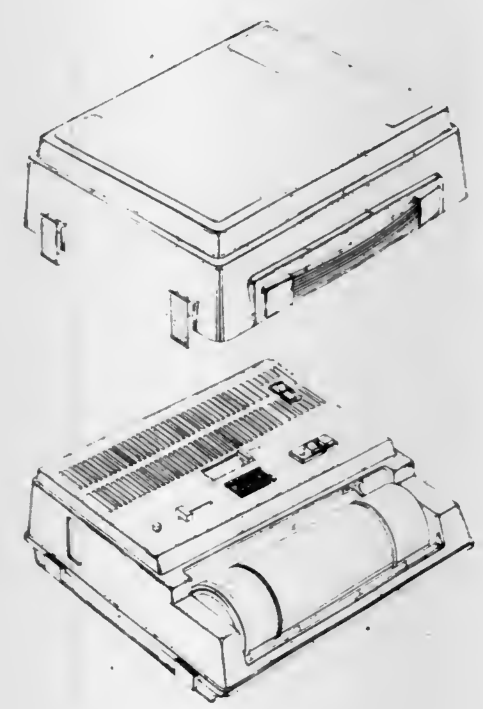

267,948
FACSIMILE TRANSMITTER AND RECEIVER
Fumiyo Kojima, Hiratsuka, and Manzo Yoshihama, Yokohama, both of Japan, assignors to Ricoh Company, Ltd., Tokyo, Japan
Filed Feb. 11, 1981, Ser. No. 233,400
Claims priority, application Japan, Aug. 11, 1980, 55-032812
Term of patent 7 years
Int. Cl. D14—*01, 03*
U.S. Cl. D14—94

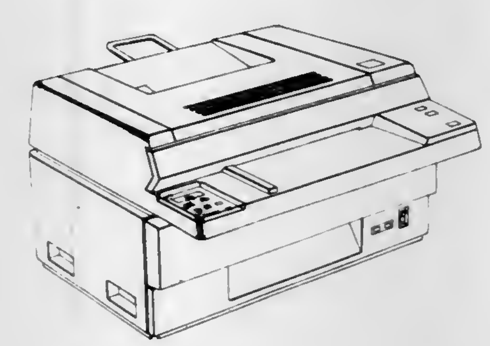

267,949
AMPLIFIER FOR AUTOMOBILE
Toshiyuki Hisatsune, Soka, Japan, assignor to Clarion Co. Ltd., Tokyo, Japan
Filed Nov. 1, 1979, Ser. No. 90,454
Term of patent 14 years
Int. Cl. D14—*03*
U.S. Cl. D14—96

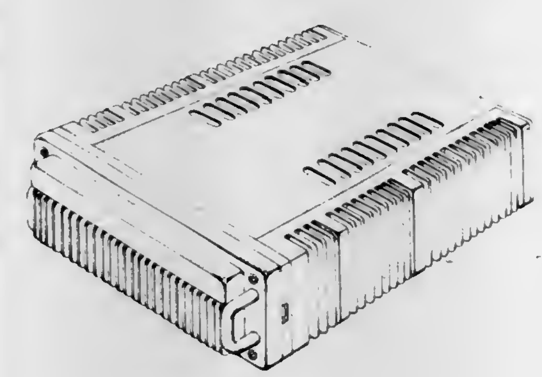

267,950
FRONT PANEL FOR A KEYBOARD AND DISPLAY UNIT
Charles M. Ault, Winchester, Mass., assignor to Termiflex Corporation, Nashua, N.H.
Filed Sep. 5, 1980, Ser. No. 184,627
Term of patent 14 years
Int. Cl. D14—*02;* D18—*01*
U.S. Cl. D14—115

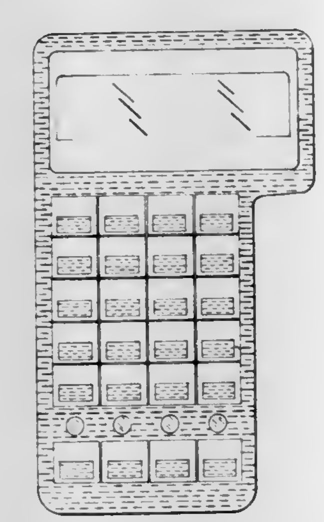

267,951
WIND TURBINE SYSTEM
Otto J. M. Smith, 612 Euclid Ave., Berkeley, Calif. 94708
Filed Oct. 6, 1980, Ser. No. 194,037
Term of patent 14 years
Int. Cl. D15—*99*
U.S. Cl. D15—1

267,952
LOW-PROFILE INTAKE MANIFOLD
James W. Martin, 17421 E. Gale Ave., City of Industry, Calif. 91745
Filed Oct. 22, 1979, Ser. No. 87,457
Term of patent 14 years
Int. Cl. D15—*99*
U.S. Cl. D15—5

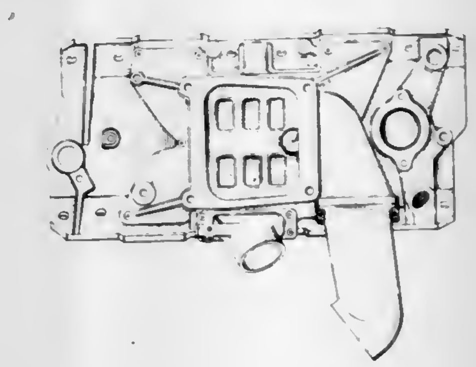

267,953
POWERED SNOW THROWER
John M. Berner, 1300 Angelo Dr., Golden Valley, Minn. 55422
Filed Mar. 27, 1979, Ser. No. 24,309
Term of patent 14 years
Int. Cl. D8—*05*
U.S. Cl. D15—12

267,954
COMBINED CAMERA/FLASH UNIT
Kenji Sawara, Tokyo, Japan, assignor to Fuji Koeki Corporation, Tokyo, Japan
Filed Jan. 19, 1981, Ser. No. 228,361
Claims priority, application Japan, Jul. 20, 1980, 55-29190
Term of patent 14 years
Int. Cl. D16—*01*
U.S. Cl. D16—6

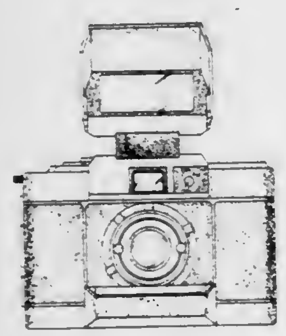

267,955
SINGLE LENS REFLEX CAMERA
Takaharu Kato, Tokyo, Japan, assignor to Ricoh Company, Ltd., Tokyo, Japan
Filed Feb. 11, 1981, Ser. No. 233,669
Claims priority, application Japan, Aug. 11, 1980, 55-032813
Term of patent 7 years
Int. Cl. D16—*01*
U.S. Cl. D16—8

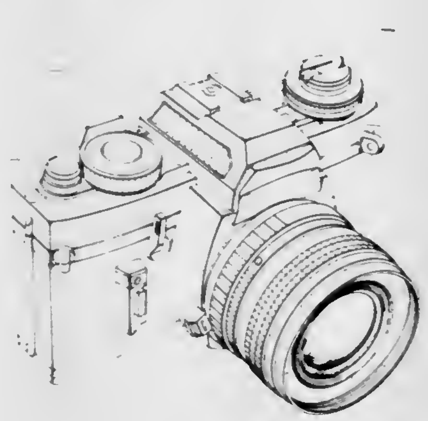

267,956
GUITAR
Mark Erlewine, 1605 Wethersfield Rd., Austin, Tex. 78703, and William F. Gibbons, 5459 Bordley, Houston, Tex. 77056
Filed Sep. 18, 1980, Ser. No. 188,605
Term of patent 14 years
Int. Cl. D17—*03*
U.S. Cl. D17—14

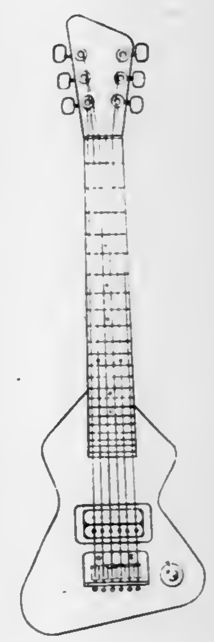

267,957
ELECTROCARDIOGRAM ANALYZER
Frank W. Jackson, Twillingate, R.D. 3, Mechanicsburg, Pa. 17055
Filed May 26, 1978, Ser. No. 910,121
Term of patent 14 years
Int. Cl. D18—*01*
U.S. Cl. D18—9

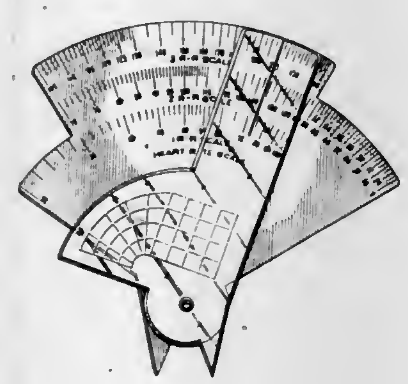

267,958
PLANISPHERE
Tetsuro Watanabe, Tokyo, Japan, assignor to Watanabe Kyogu Co., Ltd., Tokyo, Japan
Filed Nov. 21, 1980, Ser. No. 209,025
Term of patent 14 years
Int. Cl. D19—*07*
U.S. Cl. D19—61

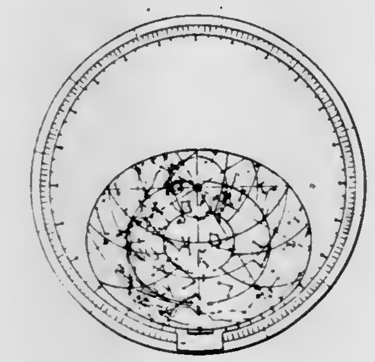

267,959
HOLDER FOR LETTERS, WRITING INSTRUMENTS, NOTE PAD AND OTHER STATIONERY ARTICLES
Kwok T. Cheung, 7 Cheung Lee St., 6/F, Flat C, Man Foong Ind. Building, Chaiwan, Hong Kong
Filed Dec. 15, 1980, Ser. No. 216,204
Claims priority, application United Kingdom, Jun. 26, 1980, 995465
Term of patent 14 years
Int. Cl. D19—*02*
U.S. Cl. D19—78

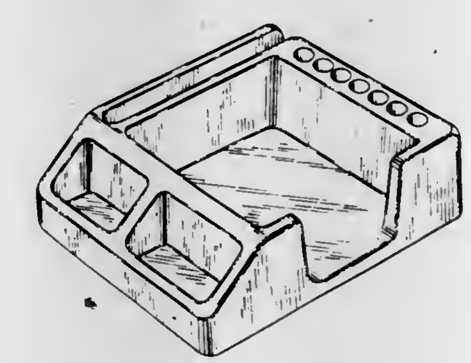

267,960
GAME BOARD
John S. Moore, 129 Quonnipaug La., Guilford, Conn. 06437
Filed Sep. 22, 1980, Ser. No. 189,789
Term of patent 14 years
Int. Cl. D21—*01*
U.S. Cl. D21—15

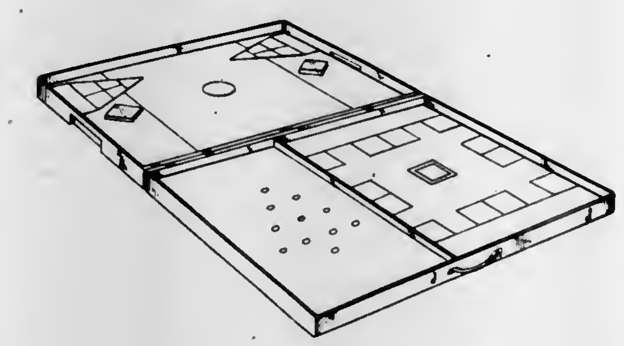

267,961
RANDOM NUMBER DIE
Matts V. Bjon, Loubentie 7 A 4, SF-02130 Espoo 13, Finland
Filed Dec. 31, 1979, Ser. No. 108,529
Term of patent 14 years
Int. Cl. D21—*01*
U.S. Cl. D21—41

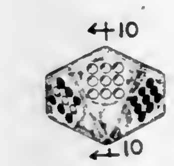

267,962
COMBINED GAME AND CARRYING CASE
Pham P. Oanh, Hohenzollernstrasse 97, Munich 40, Fed. Rep. of Germany
Filed Jan. 21, 1980, Ser. No. 113,611
Term of patent 14 years
Int. Cl. D21—*01*
U.S. Cl. D21—55

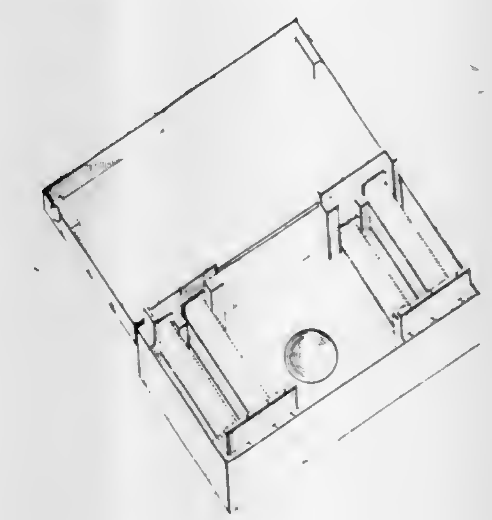

267,963
GAME DEVICE
Anne T. Alwell, St. Paul, Minn.; A. Edward Fogarty; Bonnie R. Fogarty, both of Sarasota, Fla.; David A. Pagani, Newport Beach, Calif., and Peter D. Pook, Minneapolis, Minn., assignors to Leisure Dynamics, Inc., Minneapolis, Minn.
Filed Oct. 24, 1980, Ser. No. 200,532
Term of patent 14 years
Int. Cl. D21—*01*
U.S. Cl. D21—168

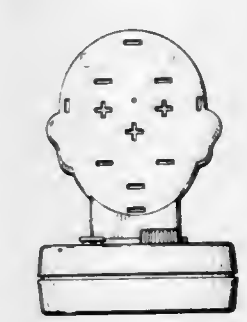

267,964
RABBIT FIGURE
Margaret K. Gibbons, 418 Walker St., Lowell, Mass. 01851
Filed Feb. 17, 1981, Ser. No. 235,165
Term of patent 14 years
Int. Cl. D21—*01*
U.S. Cl. D21—187

267,965
IRON CLUB HEAD
Masashi Kobayashi, Matsudo, Japan, assignor to Maruman Golf Kabushiki Kaisha, Tokyo, Japan
Filed Jul. 6, 1979, Ser. No. 55,485
Term of patent 14 years
Int. Cl. D21—*02*
U.S. Cl. D21—220

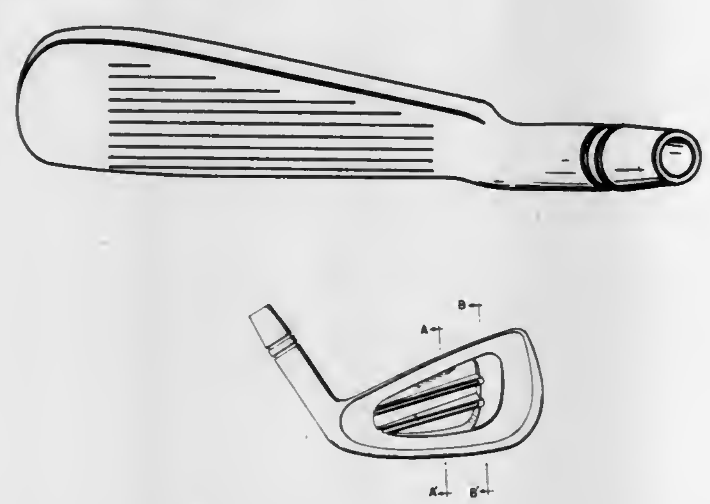

267,966
ANIMAL TRAP
Phillip Dushey, 2220 Avenue J, Brooklyn, N.Y. 11210
Filed Nov. 28, 1980, Ser. No. 211,277
Term of patent 14 years
Int. Cl. D22—*06*
U.S. Cl. D22—18

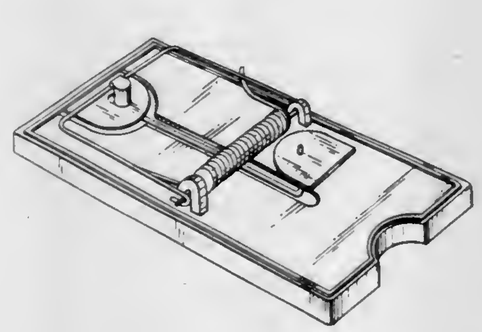

267,967
LIGHT DUTY TARGET MECHANISM
Brian H. Meredith, Corfham, England, assignor to Australasian Training Aids (Pty.) Ltd., Albury, Australia
Filed Sep. 10, 1980, Ser. No. 185,791
Term of patent 14 years
Int. Cl. D22—*04*
U.S. Cl. D22—99

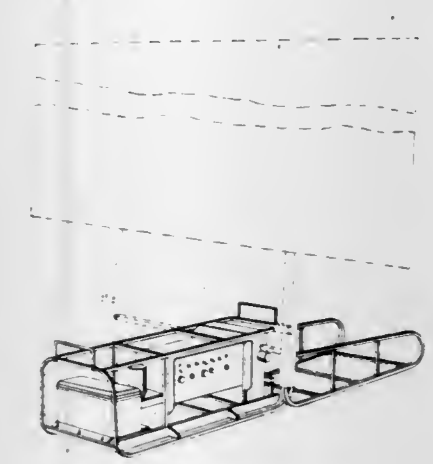

267,968
MUFFLER FOR A VALVE
Earl Beach, Royal Oak, and Calvin Matle, Farmington, both of Mich., assignors to Ross Operating Valve Company, Detroit, Mich.
Filed Sep. 30, 1980, Ser. No. 192,313
Term of patent 14 years
Int. Cl. D23—*01*
U.S. Cl. D23—1

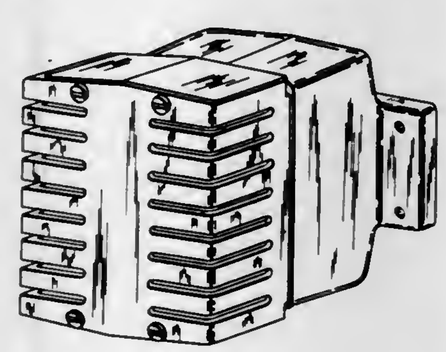

267,969
BATH SEAT
Michael Rodger, Loughborough, England, assignor to Gordon Ellis and Company, Derby, England
Filed Dec. 11, 1980, Ser. No. 215,483
Claims priority, application United Kingdom, Jun. 12, 1980, 995264
Term of patent 14 years
Int. Cl. D6—*06*
U.S. Cl. D23—71

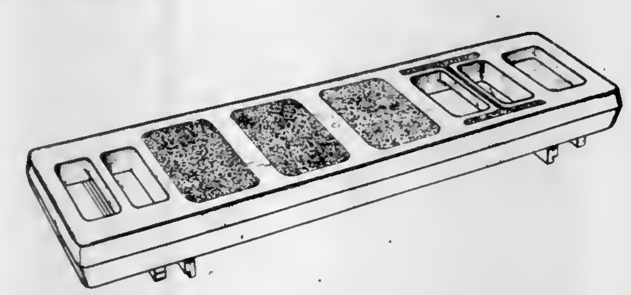

267,970
RADIANT HEATER
Jerry P. Gronwick, Park Ridge, Ill., assignor to Sunbeam Corporation, Chicago, Ill.
Filed Dec. 22, 1980, Ser. No. 219,178
Term of patent 14 years
Int. Cl. D23—*03*
U.S. Cl. D23—120

267,971
HEATER
Marc Harrison, Portsmouth, R.I., assignor to Quartzpower, Inc., Great Neck, N.Y.
Filed Jul. 14, 1980, Ser. No. 168,564
Term of patent 14 years
Int. Cl. D23—*03*
U.S. Cl. D23—123

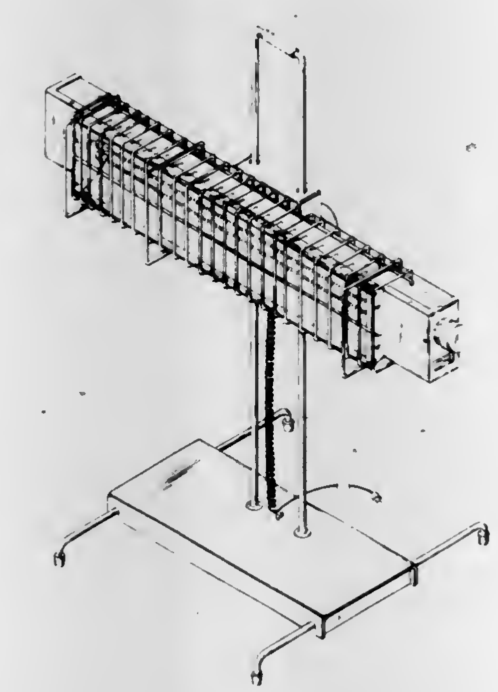

267,972
FIREPLACE CLOSURE DEVICE
Robert J. Schockemoehl, and David K. Lingwall, both of Des Moines, Iowa, assignors to R. J. Custom Firescreen, Incorporated, Des Moines, Iowa
Filed Aug. 8, 1980, Ser. No. 176,400
Term of patent 14 years
Int. Cl. D23—*03*
U.S. Cl. D23—128

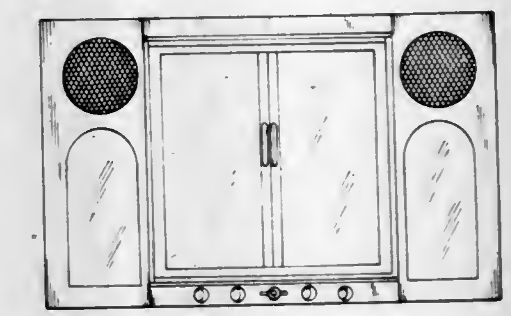

267,973
ELECTRIC FAN FOR ENGINE COOLING
Roger Clemente, 1789 Vauxhill Rd., Union, N.J. 07083
Filed Sep. 25, 1980, Ser. No. 190,938
Term of patent 14 years
Int. Cl. D23—*04*
U.S. Cl. D23—158

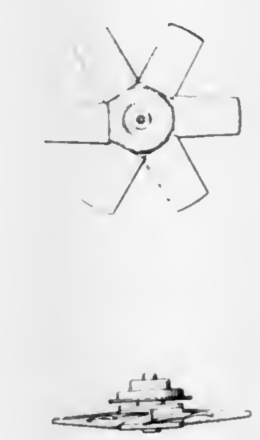

267,974
DENTAL HANDPIECE MOTOR
John D. Nilles, Roselle; Stanley L. Stankiewicz, Chicago, and David S. Zubriski, Mount Prospect, all of Ill., assignors to American Hospital Supply Corporation, Evanston, Ill.
Filed Jun. 23, 1980, Ser. No. 161,683
Term of patent 14 years
Int. Cl. D24—*02*
U.S. Cl. D24—12

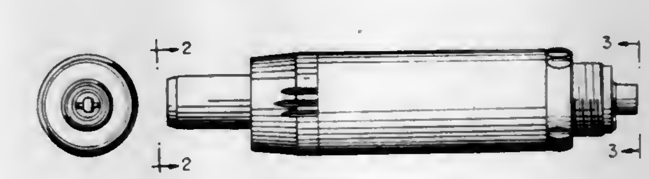

267,975
NEBULIZER CUP
Edward van Amerongen, Wilmette; Frank Cammarata, III, Palatine, and Robert A. Virag, Cary, all of Ill., assignors to Baxter Travenol Laboratories, Inc., Deerfield, Ill.
Filed Aug. 20, 1980, Ser. No. 179,721
Term of patent 14 years
Int. Cl. D9—*01*; D24—*01*
U.S. Cl. D24—62

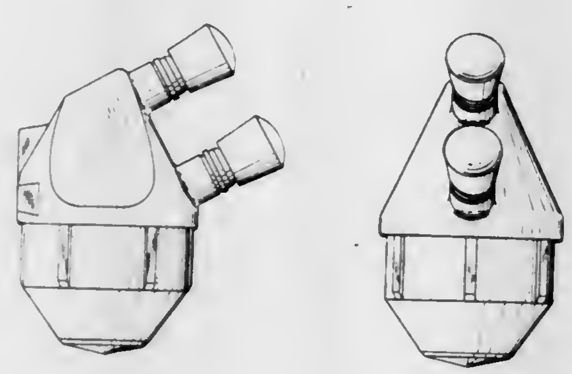

267,976
ARM-SLING
Claire W. Hammer, 415 Homeland Ave., Baltimore, Md. 21212, and Clara Z. Wernig, 7605 Knollwood Rd., Towson, Md. 21204
Continuation-in-part of Ser. No. 149,730, May 14, 1980, abandoned. This application Apr. 10, 1981, Ser. No. 253,165
Term of patent 14 years
Int. Cl. 24—*04*
U.S. Cl. D24—64

267,977
PASSENGER CONVEYANCE LOADER FOR AIRPORTS
Otto Drozd, Hialeah, Fla., assignor to Wollard Aircraft Equipment, Inc., Miami, Fla.
Filed Dec. 11, 1980, Ser. No. 215,324
Term of patent 14 years
Int. Cl. D25—*99*
U.S. Cl. D25—1

267,978
FLUORESCENT CIRCULAR LAMP ADAPTER
Jack V. Miller, 1977 E. Villa St., Pasadena, Calif. 91107
Filed Jun. 24, 1980, Ser. No. 162,519
Term of patent 14 years
Int. Cl. D26—*05*
U.S. Cl. D26—26

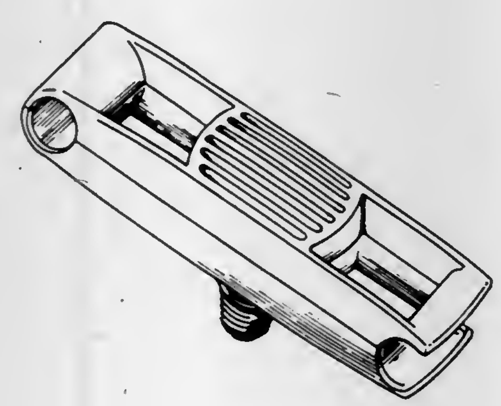

267,979
LAMP FOR A VEHICLE
Bernard Mauroy, Champs, France, assignor to Ducellier & CIE, Creteil, France
Filed Jun. 16, 1980, Ser. No. 159,696
Term of patent 14 years
Int. Cl. D26—*06*
U.S. Cl. D26—28

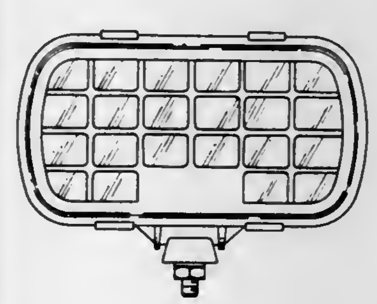

267,980
COMBINATION UTILITY AND POCKETBOOK LIGHT
Edward Gibstein, and Jeffrey Nortman, both of New York, N.Y., assignors to Jedco Products Ltd., New York, N.Y.
Filed Oct. 6, 1980, Ser. No. 194,414
Term of patent 14 years
Int. Cl. D26—*02*
U.S. Cl. D26—37

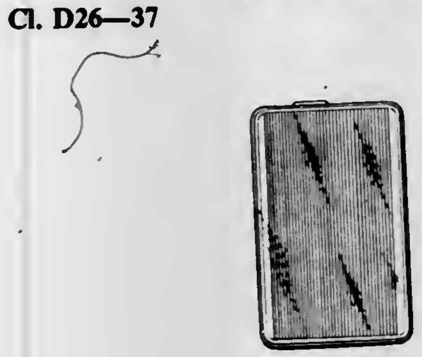

267,981
ELECTRIC CANDLESTICK OR THE LIKE
Fred W. Montague, Jr., 518 E. Franklin St., Raleigh, N.C. 27604
Filed Dec. 22, 1980, Ser. No. 218,665
Term of patent 14 years
Int. Cl. D26—*05*
U.S. Cl. D26—96

267,982
POCKET DISPENSER FOR PERFUME AND THE LIKE
Donald J. Kennedy, 30 W. 443 Fairway Dr., Naperville, Ill. 60540
Filed Nov. 17, 1980, Ser. No. 207,921
Term of patent 14 years
Int. Cl. D28—*03*
U.S. Cl. D28—5

267,983
VANITY MIRROR INCORPORATING ILLUMINATED SURROUND
Kwok K. Cheung, Chi Wah Industrial Bldg., 1-7, Kin Hon St., Block C, 9/F, Kwai Chung, N.T., Hong Kong, assignor to Kwok Kee Cheung; King Sing Tong and Wing Kui Tong, all of Kwai Chung, Hong Kong
Filed Feb. 11, 1981, Ser. No. 233,644
Claims priority, application United Kingdom, Dec. 3, 1980, 997859
Term of patent 3½ years
Int. Cl. D28—*03*
U.S. Cl. D28—67

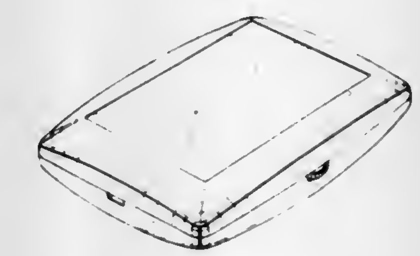

267,984
STICK FOR THE APPLICATION OF COSMETICS
Pierre Ballereaud, 4 bis, route d'Ormoy, 28360 Dammarie, France
Filed Feb. 10, 1981, Ser. No. 233,184
Claims priority, application Switzerland, Aug. 12, 1980, 70.575
Term of patent 14 years
Int. Cl. D28—*02*
U.S. Cl. D28—89

267,985
DISPOSABLE FACE MASK
Otto L. Huber, Beverly Hills, Calif., assignor to Moldex/Metric Products, Inc., Culver City, Calif.
Filed Sep. 24, 1980, Ser. No. 190,460
Term of patent 14 years
Int. Cl. D29—*02;* D24—*99*
U.S. Cl. D29—08

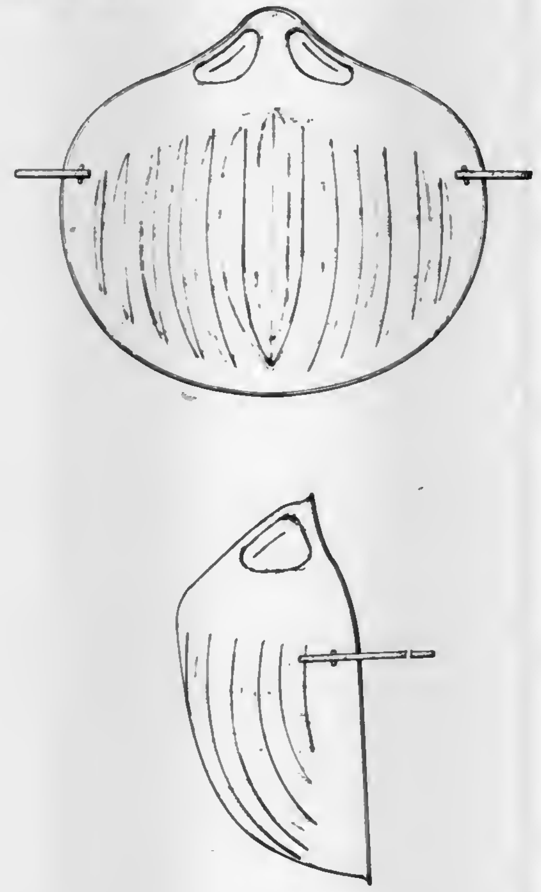

LIST OF PATENTEES

TO WHOM

PATENTS WERE ISSUED ON THE 15TH DAY OF FEBRUARY, 1983

NOTE.—Arranged in accordance with the first significant character or word of the name (in accordance with city and telephone directory practice).

A.M.S. Corporation: *See—*
Starck, William R., 4,373,295, Cl. 49-435.000.
A/S Tele-Plan: *See—*
Holmen, Hans K., 4,373,332, Cl. 60-426.000.
AA Wire Products Company: *See—*
Allan, Jack A., 4,373,314, Cl. 52-434.000.
Abbott Laboratories: *See—*
Mowles, Donald L.; Middaugh, James F.; Rutnarak, Sangvorn; and Genese, Joseph N., 4,373,559, Cl. 141-18.000.
Abel, Cora: *See—*
Abel, Jack; and Abel, Cora, 4,373,279, Cl. 40-155.000.
Abel, Jack; and Abel, Cora. Frame straightening and supporting device. 4,373,279, Cl. 40-155.000.
Abel, William A.: *See—*
Massey, Lester G.; Brabets, Robert I.; Abel, William A.; Anderson, James K.; Labus, Thomas J.; and George, Davis A., 4,373,864, Cl. 417-46.000.
Abernathy, Marshall W.; and Bailey, Darrell E., to Cosden Technology, Inc. Method for controlling the formation of polymer accumulations during distillation of a vinylaromatic monomer. 4,374,000, Cl. 203-9.000.
Adachi, Hirosi: *See—*
Kawano, Yoshihiko; Adachi, Hirosi; Watanuki, Masakazu; and Ueno, Takashi, 4,373,679, Cl. 241-275.000.
Adachi, Yoshiharu, to Aisin Seiki Kabushiki Kaisha. Hydraulic booster. 4,373,424, Cl. 91-20.000.
Adamovic, Emilija, to Sherritt Gordon Mines Limited. Composite powders sprayable to form abradable seal coatings. 4,374,173, Cl. 428-325.000.
Adams, Karen M.: *See—*
Gandhi, Haren S.; and Adams, Karen M., 4,374,103, Cl. 423-213.500.
Adams, Norman H.; and Campbell, David N., to Hymatic Engineering Company Limited, The. Cryogenic cooling apparatus. 4,373,357, Cl. 62-514.0JT.
Adham, Jawad F., to International Business Machines Corporation. Connector implemented with fiber optic means and site therein for integrated circuit chips. 4,373,778, Cl. 350-96.200.
Adkins, Richard C., to Rolls-Royce Limited. Gas turbine engine combustion chambers. 4,373,327, Cl. 60-39.370.
Adler, Franklin P.; and Nadherny, Rudolph E., to Illinois Railway Equipment Company. Quick release load securing device. 4,373,841, Cl. 410-34.000.
Adlerstein, Michael G., to Raytheon Company. Method of making semiconductor device having improved Schottky-barrier junction. 4,374,012, Cl. 204-192.0SP.
Adolph, Horst G., to United States of America, Navy. Nitropolyformals. 4,374,241, Cl. 528-266.000.
Adsley, Ian: *See—*
Wykes, John S.; and Adsley, Ian, 4,374,326, Cl. 250-255.000.
Aertken, Karl: *See—*
Westernacher, Helmut; and Aertken, Karl, 4,373,999, Cl. 203-6.000.
AES Technology Systems, Inc.: *See—*
Bishop, Cliff, 4,373,848, Cl. 414-403.000.
Agence Nationale de Valorisation de la Recherche (ANVAR): *See—*
Gouesbet, Gerard, 4,373,807, Cl. 356-28.500.
Agius, Frank P. Coded key cutting device. 4,373,414, Cl. 83-414.000.
Aichelin GmbH: *See—*
Wunning, Joachim, 4,373,903, Cl. 431-215.000.
Aichinger, Wilhelm: *See—*
Bitzer, Eberhard; Aichinger, Wilhelm; and Steinhilber, Gerhard, 4,374,006, Cl. 204-43.00G.
Aihara, Mamoru: *See—*
Matsuura, Tsuyoshi; Fujiwara, Hiroshi; Aihara, Mamoru; Takahashi, Yutaka; and Nakajima, Yoshio, 4,373,796, Cl. 354-173.000.
Air Products and Chemicals, Inc.: *See—*
Tao, John C. C., 4,374,018, Cl. 208-112.000.
Tarrer, Arthur R.; and Shridharani, Ketan G., 4,374,016, Cl. 208-10.000.
Air Resources, Inc.: *See—*
Primack, Harold S., 4,374,104, Cl. 423-226.000.
Airco, Inc.: *See—*
Hinn, John S., 4,373,344, Cl. 62-62.000.
Aisin Seiki Kabushiki Kaisha: *See—*
Adachi, Yoshiharu, 4,373,424, Cl. 91-20.000.
Ito, Shoji; and Akagi, Motonobu, 4,373,552, Cl. 137-625.480.
Kondo, Toshio, 4,373,616, Cl. 188-73.450.
Akagi, Akio: *See—*
Uenishi, Toshiaki; Harada, Hidefumi; Sasaki, Katumasa; Akagi, Akio; and Yamasaki, Takanori, 4,373,963, Cl. 106-304.000.
Akagi, Motonobu: *See—*
Ito, Shoji; and Akagi, Motonobu, 4,373,552, Cl. 137-625.480.
Akita, Sigeyuki: *See—*
Kitamura, Sotoo; Akita, Sigeyuki; and Kitagawa, Junji, 4,373,388, Cl. 73-301.000.
Aktiengesellschaft Adolph Saurer: *See—*
Grundler, Robert; Fuchs, Josef; and Jenni, Herbert, 4,373,557, Cl. 139-142.000.
Akzo n.v.: *See—*
Wieringa, Johannes H., 4,374,133, Cl. 424-244.000.
Akzona Incorporated: *See—*
Gribnau, Thomas C. J.; Roeles, Frits; and Leuvering, Johannes H. W., 4,373,932, Cl. 436-501.000.
Ulin, Roy A.; Foley, Ted; and Shah, Hasmukh, 4,373,629, Cl. 206-350.000.
Alberta Research Council: *See—*
Chen, Shi-Chow; and MacTaggart, John M., 4,374,069, Cl. 260-465.400.
Albertsen, Peter S.: *See—*
Schwartz, Larry A.; Geiter, Robert; and Albertsen, Peter S., 4,373,507, Cl. 126-289.000.
Albright, Jay D.: *See—*
Moran, Daniel B.; and Albright, Jay D., 4,374,249, Cl. 548-201.000.
Albrile, Walter, to Ing. C. Olivetti & C. S.p.A. Ribbon guide for an inked ribbon cartridge. 4,373,823, Cl. 400-196.100.
Alderson, Loren L.: *See—*
Martin, Robert J.; Alderson, Loren L.; and Carlin, Jerry F., 4,373,869, Cl. 417-213.000.
Alexander, David G.; and Woolley, Ian J., to Simon-Rosedowns Limited. Apparatus for the expansion of oil bearing seeds. 4,373,434, Cl. 100-43.000.
Alexandria Extrusion Company: *See—*
Pennertz, Donald W.; and Burkey, Ritchie J., 4,373,297, Cl. 51-84.00R.
Alexandrov, Sasho P.; Mubarakshin, Gadylsha M.; Volf, Leonard A.; and Burinsky, Stanislav V., to Leningradsky Ordena Trudovogo Krasnogo Znameni Institut Textilnoi I Legkoi Promyshlennosti Imeni S.M. Kirova. Porous open-cell filled reactive material containing a polymeric matrix and reactive filler. 4,374,204, Cl. 521-28.000.
Alfa-Laval AB: *See—*
Jernqvist, Ake; and Bolmstedt, Ulf, 4,373,579, Cl. 165-167.000.
Algieri, Aldo A.: *See—*
Crenshaw, Ronnie R.; and Algieri, Aldo A., 4,374,248, Cl. 548-135.000.
Allan, Jack A., to AA Wire Products Company. Masonry veneer wall anchor. 4,373,314, Cl. 52-434.000.
Allan, John L. H.; Finestone, Arnold B.; and Roderick, John J., to El Paso Polyolefins Company. Stabilized polyolefin compositions. 4,374,230, Cl. 525-134.000.
Allen, Beverly J., to Oscar Lucks Company. Humidifier for a proof box. 4,373,430, Cl. 99-468.000.
Allen, Robert J.; Blake, Edward W.; Rao, Manjeshwar S.; and Hahn, Kurt L., to American Can Company. Press transfer bar. 4,373,370, Cl. 72-349.000.
Allibert Exploitation: *See—*
Rech, Jacques, 4,373,306, Cl. 52-98.000.
Allied Corporation: *See—*
Lefrancois, Philip A., 4,374,111, Cl. 423-347.000.
Mathe, Istvan; and Kasper, Alan H., 4,373,769, Cl. 339-97.00R.
Van Der Puy, Michael; and Piskorz, Ronald F., 4,374,289, Cl. 570-168.000.
Allis-Chalmers Corporation: *See—*
Goldman, Holliday L., 4,373,242, Cl. 29-157.10R.
Petit, Peter J.; and Hartwig, Walter J., 4,373,908, Cl. 432-109.000.
Petit, Peter J.; and Gill, Thomas J., 4,373,909, Cl. 432-109.000.
Allori, Aldo; Koutsky, Ronald A.; and Wilger, John A., to International Harvester Co. Probe mount assembly for brake wear warning systems. 4,374,375, Cl. 340-52.00A.
Aluminum Company of America: *See—*
Ray, Siba P., 4,374,050, Cl. 252-519.000.
AM International, Inc.: *See—*
Hur, John Y., 4,374,190, Cl. 430-19.000.
Amax Inc.: *See—*
Lussiez, Guy W.; and Jha, Mahesh C., 4,374,101, Cl. 423-150.000.
Sebenik, Roger F.; Hallada, Calvin J.; Barry, Henry F.; and Tsigdinos, George A., 4,374,100, Cl. 423-56.000.
Amchem Products, Inc.: *See—*
Hess, Susan V., 4,373,968, Cl. 148-6.200.
American Can Company: *See—*
Allen, Robert J.; Blake, Edward W.; Rao, Manjeshwar S.; and Hahn, Kurt L., 4,373,370, Cl. 72-349.000.
American Cyanamid Company: *See—*
Blank, Werner J., 4,374,164, Cl. 427-385.500.
Johnson, Melvin C., 4,374,135, Cl. 424-251.000.

Moran, Daniel B.; and Albright, Jay D., 4,374,249, Cl. 548-201.000.
Trenbeath, Steven L.; Novak, Robert W.; and Feldman, Allan M., 4,374,107, Cl. 423-265.000.
American Motors Corporation: *See—*
Lunn, Royston C.; MacAfee, J. Edwin; Grabowski, Robert C.; Renneker, Dennis N.; and Winkler, John M., 4,373,604, Cl. 180-247.000.
American Newspaper Publishers Association: *See—*
Matalia, Harshad D.; and Navi, Menashe, 4,373,443, Cl. 101-221.000.
AMP Incorporated: *See—*
Long, Alden O., Jr., 4,373,261, Cl. 29-861.000.
Analog Devices, Inc.: *See—*
Deacutis, James J., 4,374,314, Cl. 219-121.0LJ.
Anderson, Alfred J., to Atlantic Richfield Company. Thermally stabilized heliostat. 4,373,783, Cl. 350-310.000.
Anderson, George W.: *See—*
Mahaffy, Reid A.; and Anderson, George W., 4,373,341, Cl. 60-721.000.
Anderson, Gerald L.; Borders, Harley A.; and Aquino, Maria R., to Institute of Gas Technology. Purification of fuel gases. 4,374,105, Cl. 423-230.000.
Anderson, James K.: *See—*
Massey, Lester G.; Brabets, Robert I.; Abel, William A.; Anderson, James K.; Labus, Thomas J.; and George, Davis A., 4,373,864, Cl. 417-46.000.
Anderson, William C.: *See—*
Wolters, Richard H.; Anderson, William C.; Tyke, Charles R.; and Schreiner, Charles P., 4,373,642, Cl. 220-72.000.
Andonian, Harry A.; and Dickinson, Warren A., Jr., to SCM Corporation. Process for controlling the pinking of onions. 4,374,153, Cl. 426-321.000.
Aneja, Viney P., to General Electric Company. Purification of aqueous effluent streams containing BPA and phenol. 4,374,283, Cl. 568-724.000.
Anisimov, Veniamin M.; Belov, Valentin V.; Verkevich, Vsevolod I.; and Orionov, Jury E. Shutoff valve actuator remote control system. 4,373,698, Cl. 251-26.000.
Anschutz & Co. GmbH: *See—*
Kundler, Walter; Pientak, Reinhold; Schulz, Claus; and Skerka, Wolfgang, 4,374,423, Cl. 364-434.000.
Antos, George J., to UOP Inc. Hydrocarbon dehydrogenation method and nonacidic multimetallic catalytic composite for use therein. 4,374,046, Cl. 252-466.00B.
Anzai, Masayasu: *See—*
Mukoh, Akio; Morishita, Hirosada; Anzai, Masayasu; Tokunaga, Kazuyoshi; and Kikuchi, Yasuo, 4,374,191, Cl. 430-100.000.
Anzalone, Carmen J., to Fedders Corporation. Refrigerant control. 4,373,353, Cl. 62-200.000.
Aoki, Kiyoshi; and Ohara, Saburo, to Kanebo, Ltd.; and Kanebo Synthetic Fibers Ltd. Modifier for fibers or fibrous structures and modified fibers or fibrous structures. 4,374,176, Cl. 428-392.000.
Aoki, Takaaki: *See—*
Miyake, Kanichi; Tokuda, Masahiro; Aoki, Takaaki; Miyakawa, Hideaki; and Tamura, Yasuo, 4,374,217, Cl. 524-47.000.
Applied Magnetics Corporation: *See—*
Martin, Richard T., 4,373,470, Cl. 118-720.000.
Aquino, Maria R.: *See—*
Anderson, Gerald L.; Borders, Harley A.; and Aquino, Maria R., 4,374,105, Cl. 423-230.000.
Arai, Kenichiro, to Shinshu Seiki Kabushiki Kaisha; and Kabushiki Kaisha Suwa Seikosha. Dot printer. 4,373,438, Cl. 101-93.040.
Arai, Kozo: *See—*
Shingu, Hideo; Arai, Kozo; and Ootsuka, Ryotatsu, 4,373,950, Cl. 75-68.00R.
Araki, Kunihiko, to Ricoh Company, Ltd. Focusing position detection apparatus. 4,373,791, Cl. 354-25.000.
Arbique, Roland H., to Canada, Her Majesty the Queen in Right of, as represented by the Minister of National Defence. Respirator speech unit/outlet valve. 4,373,520, Cl. 128-201.190.
Arendt, Ronald H., to General Electric Company. Preparation of ultrafine $BaZrO_3$. 4,374,117, Cl. 423-593.000.
Armfield, Samuel L., III. X-Ray viewing apparatus. 4,373,280, Cl. 40-367.000.
Armour and Company: *See—*
Lundquist, Burton R.; and Kozlowski, Thomas A., 4,373,661, Cl. 229-87.00F.
Armstrong, Thomas R., to Paradyne Corporation. System for the monitoring and restoration of series terminals in a looped communication system. 4,374,436, Cl. 371-11.000.
Arndt, Klaus, to Contraves AG. Arrangement for the rigid connection of a driven shaft with a graduated disk of a precision measuring instrument. 4,373,827, Cl. 403-24.000.
Arnold, Jones B.; Steger, Philip J.; and Wright, Ralph R., to United States of America, Energy. Method for producing highly reflective metal surfaces. 4,374,002, Cl. 204-7.000.
Artweger, Wolfgang, to Hutter & Schranz Bautechnik Gesellschaft m.b.H. Integral housing body. 4,373,311, Cl. 52-282.000.
ASA S.A.: *See—*
Faure, Jean-Louis, 4,373,233, Cl. 19-236.000.
Asgar, Kamal; and Reichman, Steven H., to Special Metals Corporation. Silver-tin-copper-palladium alloy and amalgam thereof. 4,374,085, Cl. 420-470.000.
Ashford, David W.; and Hummel-Newell, Robert, to Solartron Electronic Group Limited, The. Weapon effect simulators. 4,373,916, Cl. 434-22.000.
Ashland Oil, Inc.: *See—*
Blegen, James R., 4,374,167, Cl. 428-141.000.
Blegen, James R., 4,374,181, Cl. 428-423.300.
Culbertson, Billy M.; Post, Larry K.; and Aulabaugh, Ann E., 4,374,235, Cl. 526-262.000.
Daniel, Chelliah; and Brusky, Phyllis L., 4,374,268, Cl. 562-599.000.
Dunnavant, William R.; Field, Richard E.; and Borgnaes, Dan, 4,374,229, Cl. 525-28.000.
Hettinger, William P., Jr.; and Kovach, Stephen M., 4,374,019, Cl. 208-120.000.
Ruszala, Ferdinand A.; Hoggins, James T.; and Hupp, Stephen S., 4,374,109, Cl. 423-311.000.
Ruszala, Ferdinand A., 4,374,269, Cl. 562-599.000.
Ruszala, Ferdinand A.; and Weeks, Thomas J., Jr., 4,374,270, Cl. 562-599.000.
Asselman, George A. A.; and Michels, Albertus P. J., to U.S. Philips Corporation. Hot water production apparatus utilizing a heat pump. 4,373,343, Cl. 62-238.600.
Atkins, Kenneth E., to Union Carbide Corporation. Polyester moldings. 4,374,215, Cl. 523-514.000.
Atlantic Richfield Company: *See—*
Anderson, Alfred J., 4,373,783, Cl. 350-310.000.
Whittaker, Ralph E., 4,373,308, Cl. 52-173.00R.
Aulabaugh, Ann E.: *See—*
Culbertson, Billy M.; Post, Larry K.; and Aulabaugh, Ann E., 4,374,235, Cl. 526-262.000.
Ausikaitis, Joseph P.; and Garg, Desh R., to Union Carbide Corporation. Adsorption separation cycle. 4,373,935, Cl. 55-33.000.
Auto-Line Manufacturing Corp.: *See—*
Shekel, Joseph; and DeStefano, Joseph, 4,373,762, Cl. 339-31.00B.
Shekel, Joseph; and DeStefano, Joseph, 4,373,763, Cl. 339-31.00B.
Avalon Industries, Inc.: *See—*
Berman, Mort, 4,373,918, Cl. 434-307.000.
Avery, Grant D., to Sprague Electric Company. Two terminal Hall-sensor. 4,374,333, Cl. 307-309.000.
Avon Products, Inc.: *See—*
Znaiden, Alexander P., 4,374,236, Cl. 528-26.500.
Ayers, Grover W., to Eli Lilly and Company. Molded implant removal knife. 4,373,263, Cl. 30-294.000.
Ayers, Ray R.; and Kipp, Robert M., to Shell Oil Company. Spring finger connector. 4,373,753, Cl. 285-319.000.
Azar, Jack C.: *See—*
Henry, Arnold W.; Azar, Jack C.; and Sagal, John, Jr., 4,373,239, Cl. 29-132.000.
B. F. Goodrich Company, The: *See—*
Hall, Dale R., 4,374,205, Cl. 521-85.000.
Bailey, Darrell E.: *See—*
Abernathy, Marshall W.; and Bailey, Darrell E., 4,374,000, Cl. 203-9.000.
Bajard, Jean, to Societe Alsacienne de Services Industriels. Arrangement for measuring the amount of gas enclosed in a liquid. 4,373,374, Cl. 73-19.000.
Baker International Corporation: *See—*
Silberman, Raphael J.; Tilton, Frederick T.; Smith, Everett H.; and Wichkoski, Dennis A., 4,373,584, Cl. 166-117.700.
Bakker, Gijsbertus; and Groot, Theodorus C., to U.S. Philips Corporation. Method of manufacturing a color television display tube. 4,373,237, Cl. 445-3.000.
Baldwin, John J.; Ponticello, Gerald S.; Vickers, Stanley; and Steuerwald, Alfred, to Merck & Co., Inc. 2-Substituted propoxy-3-cyano-5-hydroxypyridines and use as antihypertensives. 4,374,140, Cl. 424-263.000.
Ballast-Nedam Groep N.V.: *See—*
Wolters, Tjako A., 4,374,420, Cl. 364-424.000.
Bally Manufacturing Corporation: *See—*
Hooker, Donald E.; and Tojza, Roman A., 4,373,727, Cl. 273-143.00R.
Balzer & Droll, KG: *See—*
Muller, Josef, 4,373,257, Cl. 29-736.000.
Bandai, Shinji; Kajimaki, Masao; Nakajima, Yoshihiro; Yagi, Akira; and Nishimura, Haruo, to Duskinfranchise Kabushiki Kaisha. Method for manufacturing a duster and the duster manufactured therefrom. 4,373,224, Cl. 15-1.50A.
Banich, John N., Sr.; and Zipper, Donald H., to Continental Group, Inc., The. Plastic closure and related container finish. 4,373,641, Cl. 215-331.000.
Banks, Edward L., to Western Electric Company, Inc. Methods and apparatus for polishing a semiconductor wafer. 4,373,991, Cl. 156-645.000.
Barajas, Felix, to McDonnell Douglas Corporation. Solder composition. 4,373,974, Cl. 148-24.000.
Barber, Duane G.: *See—*
Reid, Taylor A.; Miller, James A.; and Barber, Duane G., 4,373,813, Cl. 356-326.000.
Barber, James C., to James C. Barber and Associates, Inc. Bench scale drum agglomerator and power means. 4,373,893, Cl. 425-222.000.
Barber, Nigel T.: *See—*
Parnum, John D.; and Barber, Nigel T., 4,373,301, Cl. 51-281.00C.
Barbier, Jean-Paul; and Lerouyer, Gilbert, to L'Air Liquide. Process for gaseously opalizing bulbs. 4,374,157, Cl. 427-37.000.
Barclay, Donald J.; and Vigar, James M. L., to International Business Machines Corporation. Trivalent chromium electroplating solution and process. 4,374,007, Cl. 204-51.000.
Barcza, Sandor, to Sandoz, Inc. 4,4'-(Alkanediyl)-bis(2,2,6,6-tetraalkyl-1-oxa-4-aza-2,6-disilacyclohexanes). 4,374,130, Cl. 424-184.000.

Barettella, Bernard. Window shade roller assembly. 4,373,569, Cl. 160-263.000.
Barker, Charles E.; Cairo, Anthony C.; Bauer, Frederick T.; and Jackson, Auzville, Jr., to Robertshaw Controls Company. Wall thermostat and the like. 4,373,664, Cl. 236-46.00R.
Barnes, Kerry B., to RCA Corporation. Expandable FIFO system. 4,374,428, Cl. 364-900.000.
Barnett, Eugene J., to White Consolidated Industries, Inc. Motorized oven door latch and control circuit for same. 4,374,320, Cl. 219-413.000.
Barney, John H., to Tosco Corporation. Heat flux control technique. 4,374,017, Cl. 208-11.00R.
Barr, Thomas R. Rotary drill bit. 4,373,594, Cl. 175-393.000.
Barrera, Marion; and Godfrey, Raymond. Crushing method and apparatus. 4,373,674, Cl. 241-15.000.
Barrett, Gary L., to GSE, Inc. Method and apparatus for measuring cable tension in a parking brake assembly. 4,373,402, Cl. 73-862.390.
Barry, Henry F.: *See—*
Sebenik, Roger F.; Hallada, Calvin J.; Barry, Henry F.; and Tsigdinos, George A., 4,374,100, Cl. 423-56.000.
Bartholic, David B., to Engelhard Minerals & Chemicals Corporation. Method for controlling a pretreatment process. 4,374,021, Cl. 208-251.00R.
BASF Aktiengesellschaft: *See—*
Eicken, Karl; and Wuerzer, Bruno, 4,373,945, Cl. 71-92.000.
Heilen, Gerd; Halbritter, Klaus; and Gramlich, Walter, 4,374,274, Cl. 568-313.000.
Horner, Michael; and Teege, Gernot, 4,374,258, Cl. 549-407.000.
BASF Wyandotte Corporation: *See—*
Iyengar, Doreswamy R., 4,373,962, Cl. 106-288.00Q.
Basile, Giampiero; Boero, Giancarlo; Ceresa, Emiliano M.; and Montino, Franco, to Montedison S.p.A. Process for stabilizing ferromagnetic chromium dioxide. 4,374,118, Cl. 423-607.000.
Bassett, William W.; and Rask, Dean R., to Honeywell Inc. Integrated control system using a microprocessor. 4,373,662, Cl. 236-10.000.
Bauer, Frederick T.: *See—*
Barker, Charles E.; Cairo, Anthony C.; Bauer, Frederick T.; and Jackson, Auzville, Jr., 4,373,664, Cl. 236-46.00R.
Baumoel, Joseph. Transducer structure and mounting arrangement for transducer structure for clamp-on ultrasonic flowmeters. 4,373,401, Cl. 73-861.180.
Bauser, Elisabeth; Frik, Martina; Lochner, Karl S.; and Schmidt, Laurenz, to Max-Planck-Gesellschaft zur Forderung der Wissenschaften e.V. Method of growing epitaxial layers from a liquid phase. 4,373,988, Cl. 156-622.000.
BBC Brown, Boveri & Company, Limited: *See—*
Horler, Hansulrich; and Meier, Erwin, 4,373,336, Cl. 60-606.000.
Beasley, John K.; and Urban, Edward J., to Du Pont de Nemours, E. I., and Company. Tree-resistant ethylene polymer compositions containing aromatic polycarboxylic acid. 4,374,224, Cl. 524-298.000.
Beaudette, Jerald G. Cleat device. 4,373,463, Cl. 114-218.000.
Becka, Michael M., to International Shoe Machine Corporation. Machine for applying a patch of adhesive onto the bottom of a last. 4,373,467, Cl. 118-211.000.
Becker, Andrew R., to Koppers Company, Inc. Filter bag tensioning device and method. 4,373,936, Cl. 55-97.000.
Becker, Thomas P.: *See—*
Olson, Gene E.; Thompson, Jerome A.; Grover, Donald D.; Stout, Christopher B.; Becker, Thomas P.; and Kaufman, Glenn A., 4,373,384, Cl. 73-119.00A.
Beckman Instruments, Inc.: *See—*
Reid, Taylor A.; Miller, James A.; and Barber, Duane G., 4,373,813, Cl. 356-326.000.
Bedford, Raymond E.: *See—*
Schaefer, Carl F.; and Bedford, Raymond E., 4,374,044, Cl. 252-455.00R.
Bednar, John M.; Postler, Daniel P.; and Jones, Terry V., to Exxon Production Research Co. Acoustically controlled electro-mechanical circulation sub. 4,373,582, Cl. 166-65.00R.
Beecham Group Limited: *See—*
Corbett, David F., 4,374,144, Cl. 424-274.000.
Luk, Kong; and Rogers, Norman H., 4,374,147, Cl. 424-283.000.
Behr-Thomson Dehnstoffregler GmbH: *See—*
Kurz, Manfred, 4,374,373, Cl. 337-383.000.
Beiden, Vladimir E.: *See—*
Beloglazov, Alexei V.; Beiden, Vladimir E.; Iordan, Georgy G.; Karneev, Vladimir M.; Papkov, Vladimir S.; Stuchebnikov, Vladimir M.; Khasikov, Viktor V.; and Surovikov, Mikhail V., 4,373,399, Cl. 73-777.000.
Beisel, Victor A. Flail-vacuum seed harvester. 4,373,322, Cl. 56-126.000.
Belden Corporation: *See—*
Kincaid, John, 4,374,299, Cl. 174-36.000.
Belko, Robert P.: *See—*
Klemarczyk, Philip T.; Belko, Robert P.; and Boden, Richard M., 4,374,053, Cl. 252-522.00R.
Bell, Samuel W., Jr., to Marley Company. Reflex fan cylinder for water cooling towers. 4,374,072, Cl. 261-109.000.
Bell Telephone Laboratories, Incorporated: *See—*
Camlibel, Irfan; Singh, Shobha; and Van Uitert, LeGrand G., 4,374,391, Cl. 357-17.000.
Flanagan, James L., 4,374,304, Cl. 179-15.55R.
Geyling, Franz T.; and Louzon, Theodore J., 4,374,161, Cl. 427-160.000.
Lee, Tien P., 4,374,390, Cl. 357-17.000.
Pitetti, Raymond C.; and Rutkiewicz, John, 4,374,159, Cl. 427-96.000.
Porter, Roy A., 4,373,990, Cl. 156-643.000.
Belletire, John L., to Pfizer Inc. Carboxylic acid therapeutic agents. 4,374,148, Cl. 424-317.000.
Beloglazov, Alexei V.; Beiden, Vladimir E.; Iordan, Georgy G.; Karneev, Vladimir M.; Papkov, Vladimir S.; Stuchebnikov, Vladimir M.; Khasikov, Viktor V.; and Surovikov, Mikhail V. Semiconductor strain gauge transducer. 4,373,399, Cl. 73-777.000.
Belov, Valentin V.: *See—*
Anisimov, Veniamin M.; Belov, Valentin V.; Verkevich, Vsevolod I.; and Orionov, Jury E., 4,373,698, Cl. 251-26.000.
Bendig, Lothar, to Filterwerk Mann & Hummel GmbH. Ventilation check valve for internal combustion engines. 4,373,499, Cl. 123-574.000.
Bendix Corporation, The: *See—*
Blakesley, Roland F., 4,373,262, Cl. 29-882.000.
Brown, Arthur K., 4,373,877, Cl. 418-2.000.
Eastman, James M., 4,373,858, Cl. 415-112.000.
Gaiser, Robert F., 4,373,465, Cl. 116-227.000.
O'Keefe, Patrick J., Jr.; and Weissler, Harold E., II, 4,374,422, Cl. 364-426.000.
Piscitelli, R. Amelia; Hemmer, Valentine J.; Fischer, Charles P.; and Shepler, Eric F., 4,373,773, Cl. 339-262.00R.
Runkle, Dean E., 4,373,614, Cl. 188-72.300.
Benedek, Vasile; and Huckler, Volker D., to Deere & Company. Combination creeper gear and control system for a transmission. 4,373,409, Cl. 74-745.000.
Bennett, Robert A. Child resistant type trigger actuated pump dispenser. 4,373,644, Cl. 222-153.000.
Benoist, Jacques: *See—*
Raux, Jacques; and Benoist, Jacques, 4,373,770, Cl. 339-113.00R.
Berger, Jurgen. Sump oil draining and collecting device. 4,373,561, Cl. 141-330.000.
Berger, Mitchell H.; Mayer, Walter P.; and Ward, Robert J., to Union Carbide Corporation. Silane-containing isocyanate-terminated polyurethane polymers. 4,374,237, Cl. 528-28.000.
Berger, Mitchell H.; Maresca, Louis M.; and Steiner, Ulrich A., to Union Carbide Corporation. Process for preparing polyarylates. 4,374,239, Cl. 528-176.000.
Bergh, Daniel D., to Canadian General Electric Company Limited. Cut-out fuse tube. 4,373,556, Cl. 138-140.000.
Berman, Mort, to Avalon Industries, Inc. Audio-visual, child-participating educational entertainment center. 4,373,918, Cl. 434-307.000.
Bernier, William E., to International Business Machines Corporation. Electrolytic printing. 4,374,001, Cl. 204-2.000.
Bernt, Jorgen O. Non-tangling chain link. 4,373,910, Cl. 432-118.000.
Bertozzi, Eugene R., to Thiokol Corporation. Bisdithiocarbamate esters of di-lower alkyl formals. 4,374,142, Cl. 424-270.000.
Bethke, George E., Jr.: *See—*
Bowles, Stephen W.; and Bethke, George E., Jr., 4,374,408, Cl. 364-200.000.
Bettini, John E.; and Nelson, John F., to Illinois Tool Works Inc. Plastic-headed fastener assembly. 4,373,842, Cl. 411-377.000.
Beukema, Duane M.: *See—*
Knoblauch, Jack R.; Beukema, Duane M.; and Hozeski, Kenneth W., 4,373,692, Cl. 248-162.100.
Bey, Philippe; Jung, Michel; Kolb, Michael; and Danzin, Charles, to Merrell Toraude et Compagnie. Substituted deoxyadenosine derivatives. 4,374,128, Cl. 424-180.000.
Bienvenu, Jacques; Carre, Claude; Tuong, Duc L.; and Verdier, Henri, to Compagnie Honeywell Bull. Method of and system using P and V instructions on semaphores for transferring data among processes in a multiprocessing system. 4,374,409, Cl. 364-200.000.
Bijen, Jan M. J. M.: *See—*
Bomers, Joseph J. P.; Ellis, David G.; Jansen, Johann J.; and Bijen, Jan M. J. M., 4,373,981, Cl. 156-164.000.
Bildstein, Carl R.; Heibein, Harry P.; and Mathews, Harlan P., to International Business Machines Corporation. Force-temperature stabilization of an electromagnetic device. 4,374,386, Cl. 346-75.000.
Biller, Cleveland J.; and Thorner, Benjamin C., to United States of America, Agriculture. Log handling machine. 4,373,853, Cl. 414-732.000.
Billingsley, Henry C.; and DuBois, Chester G., to Outboard Marine Corporation. Fuel system providing priming and automatic warm up. 4,373,479, Cl. 123-187.50R.
Bing, David H., to Center For Blood Research, Inc. Means and methods for purifying Clq, Clr and Cls. 4,374,061, Cl. 260-112.00R.
Bishop, Cliff, to AES Technology Systems, Inc. Method and apparatus for exposing contents of an opened envelope with gravity assist. 4,373,848, Cl. 414-403.000.
Bitzer, Eberhard; Aichinger, Wilhelm; and Steinhilber, Gerhard, to Degussa Aktiengesellschaft. Electrolytic bath for the deposition of high gloss white gold coatings. 4,374,006, Cl. 204-43.00G.
Black, Sivalls & Bryson: *See—*
Markus, Gerardus A., 4,373,899, Cl. 431-158.000.
Blake, Edward W.: *See—*
Allen, Robert J.; Blake, Edward W.; Rao, Manjeshwar S.; and Hahn, Kurt L., 4,373,370, Cl. 72-349.000.
Blakesley, Roland F., to Bendix Corporation, The. Electrical contact with locking device. 4,373,262, Cl. 29-882.000.
Blank, Werner J., to American Cyanamid Company. High solids polymer resin coating composition containing amino resin cross-linking agent. 4,374,164, Cl. 427-385.500.
Blau, Herbert, to Blau & Lapides, Inc. Resilient dome device. 4,373,464, Cl. 116-63.00R.

Blau & Lapides, Inc.: *See—*
Blau, Herbert, 4,373,464, Cl. 116-63.00R.
Blegen, James R., to Ashland Oil, Inc. Vapor permeation curable polyester resin coating compositions for flexible substrates. 4,374,167, Cl. 428-141.000.
Blegen, James R., to Ashland Oil, Inc. Vapor permeation curable coatings for reaction injection molded parts. 4,374,181, Cl. 428-423.300.
Blessom, Norman S.; Ragle, Herbert U.; and DeMoss, Dean, to Burroughs Corporation. Piezoelectric transducer mounting structure and associated techniques. 4,374,402, Cl. 360-104.000.
Blum, Patricia R.; and Nicholas, Mark L., to Standard Oil Company, The. Preparation of fluidizable vanadium phosphorus oxide catalysts using a mixed phosphorus source. 4,374,043, Cl. 252-435.000.
Blumenfeld, Martin A., to RCA Corporation. Method of fabricating buried contacts. 4,373,254, Cl. 29-578.000.
Board of Regents, University of Texas System: *See—*
Howell, John R.; and Peng, C. S. Patrick, 4,373,347, Cl. 62-112.000.
Bodart, Robert; and Werts, Jean-Pierre, to U.S. Philips Corporation. Arrangement for regenerating start-stop signals and dial pulses. 4,374,305, Cl. 179-16.0EA.
Boden, Ogden W. Device for gripping an elongated flexible element. 4,373,234, Cl. 24-191.000.
Boden, Richard M.; and Tyszkiewicz, Theodore J., to International Flavors & Fragrances Inc. Novel branched chain ketones and the process for preparing same. 4,374,276, Cl. 568-398.000.
Boden, Richard M.; and Geiger, John H., Jr., to International Flavors & Fragrances Inc. Aliphatic C_{11} branched chain aldehydes and alcohols, process for preparing same and uses thereof in augmenting or enhancing the aroma of perfumes, colognes and/or perfumed articles. 4,374,277, Cl. 568-448.000.
Boden, Richard M.: *See—*
Klemarczyk, Philip T.; Belko, Robert P.; and Boden, Richard M., 4,374,053, Cl. 252-522.00R.
Boduch, Paul A.: *See—*
Stephan, James E.; Boduch, Paul A.; and Elverum, John A., 4,374,076, Cl. 264-19.000.
Boehling, Daniel E. Rotary piston mechanism. 4,373,484, Cl. 123-241.000.
Boero, Giancarlo: *See—*
Basile, Giampiero; Boero, Giancarlo; Ceresa, Emiliano M.; and Montino, Franco, 4,374,118, Cl. 423-607.000.
Boggs, Bruce E.: *See—*
Jones, Dennis A.; and Boggs, Bruce E., 4,373,958, Cl. 106-118.000.
Bohan, John E., Jr., to Honeywell Inc. Timer and control circuit. 4,373,898, Cl. 431-73.000.
Bollfrass, Charles A.; Landriault, Leonard S.; and McDonald, Patrick E., to Hydril Company. Threaded connector. 4,373,754, Cl. 285-334.000.
Bolmstedt, Ulf: *See—*
Jernqvist, Ake; and Bolmstedt, Ulf, 4,373,579, Cl. 165-167.000.
Bomers, Joseph J. P.; Ellis, David G.; Jansen, Johann J.; and Bijen, Jan M. J. M., to Plasticisers, Ltd. Process for the manufacture of objects from water-hardened material. 4,373,981, Cl. 156-164.000.
Bondoc, Alfredo A., to Tarkett AB. Non-asbestos flooring felt containing particulate inorganic filler, a mixture of fibers and a binder. 4,373,992, Cl. 162-145.000.
Bopst, John H., III. Angle-attachment stabilizing unit. 4,373,987, Cl. 156-574.000.
Borburgh, Jacques; Naefe, Gerhard; and Rost, Helmut, to Siemens Aktiengesellschaft. Apparatus for ultrasonic scanning. 4,373,395, Cl. 73-607.000.
Borders, Harley A.: *See—*
Anderson, Gerald L.; Borders, Harley A.; and Aquino, Maria R., 4,374,105, Cl. 423-230.000.
Borer, Werner: *See—*
Schepers, Bernhard; Nobbe, Volker; Schroder, Bernd; Borer, Werner; and Kullack, Manfred, 4,374,119, Cl. 423-625.000.
Borgnaes, Dan: *See—*
Dunnavant, William R.; Field, Richard E.; and Borgnaes, Dan, 4,374,229, Cl. 525-28.000.
Bornmann, Hans: *See—*
Linden, Heinrich; Bornmann, Hans; Gress, Wolfgang; and Wegemund, Bernd, 4,373,964, Cl. 106-308.00Q.
Borsuk, Leslie M.; and Corrales, Patrick G., to International Telephone and Telegraph Corporation. Connector and cable assembly. 4,373,777, Cl. 350-96.200.
Bossu, Frank P., to Procter & Gamble Company, The. Accelerated release laundry bleach product. 4,374,035, Cl. 252-91.000.
Boswell, Bennie J.: *See—*
Schaaf, Wayne J.; and Boswell, Bennie J., 4,373,591, Cl. 172-328.000.
Bouchard, Andre C.: *See—*
Hall, Harold H., Jr.; Bouchard, Andre C.; Shaffer, John W.; and Gavenonis, Thomas L., 4,374,073, Cl. 264-3.00R.
Bouchard, James P.; and Farrell, John D., to Chicago Bridge & Iron Company. Lightweight insulating concrete. 4,373,955, Cl. 106-88.000.
Boutteville, Raymond; and Febvret, Thierry, to Intertechnique. Fluid pressure detection. 4,373,385, Cl. 73-146.500.
Bouwknegt, Albert; and Lauwerijssen, Petrus C., to U.S. Philips Corporation. Low pressure discharge lamp. 4,374,340, Cl. 313-220.000.
Bowen, Mack D.; and Purdy, Kenneth R. Pyrolysis system utilizing pyrolytic oil recycle. 4,373,995, Cl. 202-95.000.
Bowles, Stephen W.; and Bethke, George E., Jr., to Burroughs Corporation. Multi-pass system and method for source to source code translation. 4,374,408, Cl. 364-200.000.
Bowman, Edward: *See—*
Ibrahim, Fayez; and Bowman, Edward, 4,373,348, Cl. 62-115.000.
Boyd, Hugh, to Goodyear Aerospace Corporation. Resilient liner for particulate bulk cargo receptacles. 4,373,645, Cl. 222-203.000.
Bozon, Alfred; Lakatos, Eduard; Koberstein, Edgar; Pletka, Hans-Dieter; and Volker, Herbert, to Degussa Aktiengesellschaft. Process for application of a catalytically active coating containing platinum, palladium or rhodium or their mixtures to a carrier and product made by said process. 4,374,047, Cl. 252-472.000.
Brabets, Robert I.: *See—*
Massey, Lester G.; Brabets, Robert I.; Abel, William A.; Anderson, James K.; Labus, Thomas J.; and George, Davis A., 4,373,864, Cl. 417-46.000.
Bracker AG: *See—*
Holenstein, Ernst; and Ramseier, Paul, 4,373,247, Cl. 29-426.600.
Bradley, David J.; Gibbs, Dennis D.; Kostuch, Donald J.; and Martin, James S., to International Business Machines Corp. Method for using page addressing mechanism. 4,374,417, Cl. 364-200.000.
Bradshaw, Cyril E., to Eaton Corporation. Pressure transducer for exhaust gas recirculation system. 4,373,495, Cl. 123-568.000.
Bradshaw, James I., to Reliability, Inc. Burn-in chamber. 4,374,317, Cl. 219-385.000.
Brainerd, Robert A., Jr.; and Demasters, James J. Apparatus for weighing a patient on a stretcher. 4,373,595, Cl. 177-147.000.
Branham, William C.: *See—*
Garlapaty, Venkat R.; Hall, Michael J.; and Branham, William C., 4,373,427, Cl. 92-88.000.
Braxell, Nils. Device for the joining of components. 4,373,829, Cl. 403-267.000.
Breitweg, Werner: *See—*
Walter, Wolfgang; and Breitweg, Werner, 4,373,599, Cl. 180-148.000.
Brennan, Michael A.: *See—*
Stamp, Custis L., Jr.; Herzog, Rollie R.; and Brennan, Michael A., 4,373,351, Cl. 62-160.000.
Breslow, Jeffrey D.: *See—*
Hanson, Steven P.; and Breslow, Jeffrey D., 4,373,729, Cl. 273-153.00S.
Brevignon, Michele: *See—*
Dubroeucq, Georges; Lacombat, Michel; and Brevignon, Michele, 4,373,774, Cl. 350-6.600.
Brickus, Romas A.: *See—*
Stein, Bernard; Keramaty, Hamid; and Brickus, Romas A., 4,373,812, Cl. 356-246.000.
Bridgestone Tire Co., Ltd.: *See—*
Hirakawa, Hiroshi; Sato, Akio; Takusagawa, Takashi; and Ikeda, Nobumasa, 4,373,566, Cl. 152-353.00G.
Brigham, William D.: *See—*
Zwick, Eugene B.; Nguyen, Dung D.; Brigham, William D.; and Hoffman, Kenneth, 4,373,896, Cl. 431-9.000.
Bristol-Myers Company: *See—*
Crenshaw, Ronnie R.; and Algieri, Aldo A., 4,374,248, Cl. 548-135.000.
Menard, Marcel; and Martel, Alain, 4,374,065, Cl. 260-245.20R.
British Petroleum Company Limited, The: *See—*
Hancock, Ronald D.; and Mackison, Robert, 4,374,263, Cl. 560-204.000.
British Steel Corporation: *See—*
Burgin, Sidney A.; and Latham, David J., 4,373,972, Cl. 148-12.00B.
Brookes, David J.: *See—*
Powderley, John; and Brookes, David J., 4,373,318, Cl. 53-540.000.
Brooks, Burton, to Chemithon Corporation, The. Method for producing powdered detergent containing alpha olefin sulfonate. 4,374,058, Cl. 252-556.000.
Brooks Instrument B.V.: *See—*
Schuddemat, Jacob P.; and Huijsing, Johan H., 4,373,386, Cl. 73-189.000.
Brouwer, Hendrik L.: *See—*
Wittkampf, Frederik H. M.; Mensink, Kornelis A.; and Brouwer, Hendrik L., 4,373,531, Cl. 128-419.0PG.
Brown, Arthur K., to Bendix Corporation, The. Pump with rotatable reservoir casing and index means. 4,373,877, Cl. 418-2.000.
Brown, Claude D.: *See—*
Edwards, Robert E.; McKee, Donald H.; and Brown, Claude D., 4,373,363, Cl. 69-28.000.
Brown, Colin J.: *See—*
Pullen, Geoffrey J.; Pemberton, John A.; and Brown, Colin J., 4,373,319, Cl. 53-573.000.
Brown, Gale R.: *See—*
Kaiser, William L.; and Brown, Gale R., 4,373,518, Cl. 128-92.0EB.
Brown, George E. R.; Helm, Arthur E.; and Keane, Stuart. Amusement apparatus. 4,373,723, Cl. 273-86.00B.
Brown, Leonard, to Crossley Machine Company, Inc. Hydraulic press assembly. 4,373,889, Cl. 425-150.000.
Brown, Robert J.; and Shepherd, Kenneth D., to Duriron Company, Inc., The. Fire resistant seat for flow control valve. 4,373,543, Cl. 137-74.000.
Browning, Jesse. Apparatus for mixing reclaimed and virgin powder for use in spray booths. 4,373,820, Cl. 366-101.000.
Bruce, Charles R., to Marathon Oil Company. Method and apparatus for measuring leaks in liquid storage vessels. 4,373,815, Cl. 356-358.000.
Bruecker, George B. Silo discharge chute. 4,373,623, Cl. 193-14.000.
Brule, Michael R., to Kerr-McGee Corporation. Process for the liquefaction of coal. 4,374,015, Cl. 208-8.0LE.

Brun, Nicole A. A., to Labiol S.A. Method of ascertaining the hydrating action of a product to be applied to the skin. 4,373,382, Cl. 73-53.000.
Brunswick Corporation: *See—*
Kyker, Robert A., 4,373,683, Cl. 242-84.21R.
Weed, Lyle E., 4,373,922, Cl. 440-89.000.
Brusky, Phyllis L.: *See—*
Daniel, Chelliah; and Brusky, Phyllis L., 4,374,268, Cl. 562-599.000.
Bryant, David R.; and Galley, Richard A., to Union Carbide Corporation. Hydroformylation catalyst reactivation. 4,374,278, Cl. 568-454.000.
Buchta, Ervin A., to FMC Corporation. Metal seal for a gate valve stem. 4,373,700, Cl. 251-214.000.
Buckman Laboratories, Inc.: *See—*
Fenyes, Joseph G. E.; and Pera, John D., 4,374,040, Cl. 252-389.00A.
Budzich, Tadeusz. Reciprocating controls of a hydraulically driven piston gas compressor. 4,373,865, Cl. 417-46.000.
Buente, Stephen M.; and Hillebrand, George A., to Eaton Corporation. Lash adjuster with plunger retainer. 4,373,477, Cl. 123-90.550.
Bunker Ramo Corporation: *See—*
Holt, Harley R., 4,373,372, Cl. 72-406.000.
Burchette, Robert L., Jr.: *See—*
Hutchinson, George M.; and Burchette, Robert L., Jr., 4,373,685, Cl. 242-118.600.
Burde, Hans-Jurgen H.: *See—*
Schwarz, Herwig. J.; Burde, Hans-Jurgen H.; and Minet, Gunter, 4,374,172, Cl. 428-308.400.
Burgin, Sidney A.; and Latham, David J., to British Steel Corporation. Production of nickel bar and rod. 4,373,972, Cl. 148-12.00B.
Burinsky, Stanislav V.: *See—*
Alexandrov, Sasho P.; Mubarakshin, Gadylsha M.; Volf, Leonard A.; and Burinsky, Stanislav V., 4,374,204, Cl. 521-28.000.
Burke, Ben G.: *See—*
Legg, Douglas J.; and Burke, Ben G., 4,374,095, Cl. 422-218.000.
Burkey, Ritchie J.: *See—*
Pennertz, Donald W.; and Burkey, Ritchie J., 4,373,297, Cl. 51-84.00R.
Burlage, Donald W.; and Houts, Ronald C. Digital equalizer for high speed communication channels. 4,374,426, Cl. 364-724.000.
Burrington, J. D.; Grasselli, R. K.; and Kartisek, C. T., to Standard Oil Co., The. Indene production from aromatic olefins. 4,374,293, Cl. 585-410.000.
Burroughs Corporation: *See—*
Blessom, Norman S.; Ragle, Herbert U.; and DeMoss, Dean, 4,374,402, Cl. 360-104.000.
Bowles, Stephen W.; and Bethke, George E., Jr., 4,374,408, Cl. 364-200.000.
Catiller, Robert D.; and Forbes, Brian K., 4,374,416, Cl. 364-200.000.
Catiller, Robert D.; and Forbes, Brian K., 4,374,418, Cl. 364-200.000.
Burroughs Wellcome Co.: *See—*
Phillips, Arthur P., 4,374,146, Cl. 424-282.000.
Burrowes, John Kenneth: *See—*
Farrant, Herbert H., 4,373,315, Cl. 52-522.000.
Burton Mechanical Contractors Inc.: *See—*
Foreman, Brian E.; and Grooms, John M., 4,373,838, Cl. 406-14.000.
Bury, Cecil T., to David Brown Tractors Ltd. Lubricating oil pump drive for an internal combustion engine. 4,373,483, Cl. 123-198.00C.
Buschbom, Floyd E.; and Hansen, Glen D., to Veda, Inc. Three wheel drive vehicle. 4,373,600, Cl. 180-212.000.
Buttner, Gunter; Domazer, Hans-Gunter; and Eggert, Horst, to Th. Goldschmidt AG. Process for the preparation of alloy powders which can be sintered and which are based on titanium. 4,373,947, Cl. 75-0.5BB.
Caber, Earl L.: *See—*
VanHoutte, Arthur C.; and Caber, Earl L., 4,373,246, Cl. 29-426.400.
Cabot Corporation: *See—*
Yates, Barrie J.; and Hurst, Ronald C., 4,374,113, Cl. 423-445.000.
Cain Food Industries, Inc.: *See—*
Harrell, Richard G.; Glover, Herman L.; and Cain, Gary L., 4,374,150, Cl. 426-19.000.
Cain, Gary L.: *See—*
Harrell, Richard G.; Glover, Herman L.; and Cain, Gary L., 4,374,150, Cl. 426-19.000.
Cairns, James L. Underwater coaxial connector. 4,373,767, Cl. 339-94.00C.
Cairo, Anthony C.: *See—*
Barker, Charles E.; Cairo, Anthony C.; Bauer, Frederick T.; and Jackson, Auzville, Jr., 4,373,664, Cl. 236-46.00R.
Calcasola, Richard W.: *See—*
Lach, Richard F.; and Calcasola, Richard W., 4,374,435, Cl. 370-13.000.
Caldwell, Robert E., to Fairchild Camera & Instrument. Method for manufacturing a semiconductor structure having reduced lateral spacing between buried regions. 4,373,252, Cl. 29-576.00B.
Camboulives, Andre A. M. L.; Debeneix, Pierre; Gendronneau, Claude V. L.; and Hugnet, Roger P., to Societe Nationale d'Etude et de Construction de Moteurs d'Aviation (S.N.E.C.M.A.). Emergency aerosol lubrication device, particularly for airborne engines. 4,373,421, Cl. 184-6.400.
Camco, Incorporated: *See—*
Pringle, Ronald E., 4,373,587, Cl. 166-324.000.
Camisa, Raymond L., to RCA Corporation. Monolithic integrated circuit. 4,374,394, Cl. 357-81.000.
Camlibel, Irfan; Singh, Shobha; and Van Uitert, LeGrand G., to Bell Telephone Laboratories, Incorporated. Device fabrication procedure. 4,374,391, Cl. 357-17.000.
Campbell, David N.: *See—*
Adams, Norman H.; and Campbell, David N., 4,373,357, Cl. 62-514.0JT.
Campbell, Gene K., to United States of America, Energy. Pressure charged airlift pump. 4,373,867, Cl. 417-90.000.
Campbell, John R.: *See—*
Loucks, George R.; and Campbell, John R., 4,374,233, Cl. 525-394.000.
Campbell, Stephen W.; Cragg, Eric E.; Elwell, Michael J.; and Johnson, Raymond A., to Lucas Industries Limited. Electric storage battery. 4,374,188, Cl. 429-187.000.
Canada, Atomic Energy of, Limited: *See—*
Chuang, Karl T.; and Roett, Maurice F., 4,374,116, Cl. 423-580.000.
Canada, Her Majesty the Queen in Right of, as represented by the Minister of National Defence: *See—*
Arbique, Roland H., 4,373,520, Cl. 128-201.190.
Canadian General Electric Company Limited: *See—*
Bergh, Daniel D., 4,373,556, Cl. 138-140.000.
Mattuck, Morris; and Comte, Rheal, 4,373,555, Cl. 138-140.000.
Canadian Patents & Development Limited: *See—*
Russell, Leslie T., 4,373,305, Cl. 52-86.000.
Skeaff, James M.; Ritcey, Gordon M.; Haque, Kazi E.; and Lucas, Bernard H., 4,374,096, Cl. 423-9.000.
Vikis, Andreas C., 4,374,010, Cl. 204-157.10R.
Canale, Albert S.: *See—*
Canale, Ralph D.; Canale, Albert S.; and Papazian, Harry, 4,374,036, Cl. 252-135.000.
Canale, Michael A.: *See—*
Canale, Ralph D.; Canale, Albert S.; and Papazian, Harry (said Harry Papazian assors. to), 4,374,036, Cl. 252-135.000.
Canale, Ralph D.; Canale, Albert S.; and Papazian, Harry, to Canale, Michael A., by said Harry Papazian. Composition and concentrate useful for making a fountain solution for lithographic printing operations. 4,374,036, Cl. 252-135.000.
Cannon, Jack W.; Herrman, Bradley D.; and Ramirez, Ramiro, Jr., to International Business Machines Corporation. Information transfer system wherein bidirectional transfer is effected utilizing unidirectional bus in conjunction with key depression signal line. 4,374,429, Cl. 364-900.000.
Canon Denshi Kabushiki Kaisha: *See—*
Shimada, Fumio; and Sugiura, Yoji, 4,373,797, Cl. 354-234.000.
Canon Kabushiki Kaisha: *See—*
Eida, Tsuyoshi; Yano, Yasuhiro; Matsufuji, Yohji; Haruta, Masahiro; and Ohta, Tokuya, 4,373,954, Cl. 106-20.000.
Kimura, Hiroyuki; and Yamada, Tateo, 4,373,795, Cl. 354-173.000.
Kuge, Tsukasa; Matsumoto, Toru; Watanabe, Tsuyoshi; and Tamura, Yasuyuki, 4,373,469, Cl. 118-652.000.
Shimada, Fumio; and Sugiura, Yoji, 4,373,797, Cl. 354-234.000.
Suda, Masashi; and Kanbe, Junichiro, 4,373,468, Cl. 118-658.000.
Tsukada, Shusei; and Kurosaki, Yasuhide, 4,373,798, Cl. 355-3.0DD.
Yamada, Yasuyuki, 4,373,786, Cl. 350-432.000.
Caputo, William R.; and Husson, Alan L., to Westinghouse Electric Corp. Elevator system. 4,373,612, Cl. 187-29.00R.
Cardarelli, Nathan F.; and Evans, William H., to Warner-Lambert Company. Film forming antimicrobial material. 4,374,126, Cl. 424-81.000.
Carl Strutz & Company, Inc.: *See—*
Rodenbaugh, Ralph L.; and Zwigert, John M., 4,373,437, Cl. 101-35.000.
Carlander, Lars E. Device for variable height adjustment of supports. 4,373,334, Cl. 60-594.000.
Carlin, Jerry F.: *See—*
Martin, Robert J.; Alderson, Loren L.; and Carlin, Jerry F., 4,373,869, Cl. 417-213.000.
Carlisle Corporation: *See—*
Wagner, Harry H., 4,374,059, Cl. 523-153.000.
Carlston, Richard L.: *See—*
Martellock, Arthur C.; Carlston, Richard L.; and Liang, Shwu-Jian, 4,374,212, Cl. 523-212.000.
Carre, Claude: *See—*
Bienvenu, Jacques; Carre, Claude; Tuong, Duc L.; and Verdier, Henri, 4,374,409, Cl. 364-200.000.
Carson Products Company: *See—*
de la Guardia, Mario J., 4,373,540, Cl. 424-89.000.
Carter, Vernon H. Method for generation of bio-gas. 4,374,199, Cl. 435-167.000.
Casale, Michael A.: *See—*
Nalepa, Roger A.; and Casale, Michael A., 4,373,549, Cl. 137-487.500.
Casio Computer Co., Ltd.: *See—*
Morishige, Morio, 4,373,821, Cl. 368-21.000.
Castoe, John H. Method for removing cam shaft sprocket. 4,373,240, Cl. 29-156.40R.
Caterpillar Tractor Co.: *See—*
Livesay, Richard E., 4,373,758, Cl. 305-22.000.
Phelps, Weldon L., 4,373,697, Cl. 251-129.000.
Catiller, Robert D.; and Forbes, Brian K., to Burroughs Corporation. Linear sequencing microprocessor having word and byte handling. 4,374,416, Cl. 364-200.000.

Davis, Larry; and Klein, Joseph T., to Hoechst-Roussel Pharmaceuticals Inc. 8-[3-(6-Fluoro-1,2-benzisoxazol-3-yl)propyl]-1-phenyl-1,3,8-triazaspiro[4.5]decan-4-one. 4,374,245, Cl. 546-20.000.

Davis, Larry: *See—*

Effland, Richard C.; Davis, Larry; and Klein, Joseph T., 4,374,137, Cl. 424-258.000.

Davis, William J., to Gelman Sciences Inc. Graft copolymer membrane and processes of manufacturing and using the same. 4,374,232, Cl. 525-243.000.

Dawson, Kenneth H., to Spiral Binding Company, Inc. Bookbinding wire stock production method and apparatus. 4,373,558, Cl. 140-71.00R.

Day, William J., to Raytheon Company. Gas burner convection oven. 4,373,504, Cl. 126-21.00A.

de la Guardia, Mario J., to Carson Products Company. Hair straightening process and hair curling process and compositions therefor. 4,373,540, Cl. 424-89.000.

Deacutis, James J., to Analog Devices, Inc. Laser template trimming of circuit elements. 4,374,314, Cl. 219-121.0LJ.

Deadmore, Daniel L.; and Young, Stanley G., to United States of America, Administrator, National Aeronautics and Space Administration. Silicon-slurry/aluminide coating. 4,374,183, Cl. 428-641.000.

Dean, Robert. Staircase handrail construction. 4,373,310, Cl. 52-182.000.

Debeneix, Pierre: *See—*

Camboulives, Andre A. M. L.; Debeneix, Pierre; Gendronneau, Claude V. L.; and Hugnet, Roger P., 4,373,421, Cl. 184-6.400.

Decker, Rainer, to Precitronic Gesellschaft fur Feinmechanik und Electronic m.b.H. Device for capacitive level measurement. 4,373,389, Cl. 73-304.00C.

Declercq, Pierre J. R., to Goodyear Tire & Rubber Company, The. Tire rim and adapter. 4,373,567, Cl. 152-405.000.

Deco Coatings Corporation: *See—*

Rodenbaugh, Ralph L.; and Zwigert, John M., 4,373,437, Cl. 101-35.000.

De Donato, Victor. Stairway stringers constructed of cast, readily-assembled units. 4,373,609, Cl. 182-178.000.

Deere & Company: *See—*

Benedek, Vasile; and Huckler, Volker D., 4,373,409, Cl. 74-745.000.

Michael, Richard A., 4,373,622, Cl. 192-85.0AA.

Schuhmacher, Ernst, 4,373,924, Cl. 464-38.000.

Shindelar, Aloysius C., 4,373,551, Cl. 137-614.060.

Degussa Aktiengesellschaft: *See—*

Bitzer, Eberhard; Aichinger, Wilhelm; and Steinhilber, Gerhard, 4,374,006, Cl. 204-43.00G.

Bozon, Alfred; Lakatos, Eduard; Koberstein, Edgar; Pletka, Hans-Dieter; and Volker, Herbert, 4,374,047, Cl. 252-472.000.

Kleemann, Axel; Martens, Jurgen; and Samson, Marc, 4,374,062, Cl. 260-112.50R.

Deinet, Adolph J.; and Woods, William B., to Tenneco Chemicals, Inc. Surface-coating compositions containing polyvalent metal salts of hydroxybenzoic acid esters. 4,373,953, Cl. 106-16.000.

Deinlein, Hans; and Kummer, Gottfried, to Kraftwerk Union Aktiengesellschaft. Nuclear reactor having a liquid coolant. 4,374,083, Cl. 376-306.000.

Dellinger, Thomas B.; and Kelly, John, Jr., to Mobil Oil Corporation. Rotary drilling drill string stabilizer-cuttings grinder. 4,373,592, Cl. 175-61.000.

Delorean Research Limited Partnership: *See—*

Smyth, Brice W., 4,373,885, Cl. 425-129.00R.

Delsi: *See—*

Coustre, Andre; Elitzsch, Robert; and Caullier, Jean-Claude, 4,374,424, Cl. 364-497.000.

Demasters, James J.: *See—*

Brainerd, Robert A., Jr.; and Demasters, James J., 4,373,595, Cl. 177-147.000.

Dembinski, Joan R., to Sterling Drug Inc. Plasma uric acid lowering method. 4,374,132, Cl. 424-241.000.

DeMoss, Dean: *See—*

Blessom, Norman S.; Ragle, Herbert U.; and DeMoss, Dean, 4,374,402, Cl. 360-104.000.

Dennison, Everett G., Jr. Moisture sensing device for pipes and the like. 4,374,379, Cl. 340-604.000.

Desai, Jaydev D., to United States of America, Navy. Gold based material for electrical contact materials. 4,374,086, Cl. 420-507.000.

DeStefano, Joseph: *See—*

Shekel, Joseph; and DeStefano, Joseph, 4,373,762, Cl. 339-31.00B.

Shekel, Joseph; and DeStefano, Joseph, 4,373,763, Cl. 339-31.00B.

Dexter, Martin: *See—*

Spivack, John D.; Dexter, Martin; and Pastor, Stephen D., 4,374,219, Cl. 524-91.000.

Diamond, Arthur S.: *See—*

Mayer, Edward F.; Diamond, Arthur S.; and Chang, Paul, 4,374,192, Cl. 430-108.000.

Dickie, Ray A.; Holubka, Joseph W.; and Qaderi, S. Burhan A., to Ford Motor Company. Alkaline resistant organic coatings for corrosion susceptible substrates III. 4,374,213, Cl. 523-416.000.

Dickinson, Warren A., Jr.: *See—*

Andonian, Harry A.; and Dickinson, Warren A., Jr., 4,374,153, Cl. 426-321.000.

Dickson, Robert A. Holder for toilet paper roll. 4,373,682, Cl. 242-55.200.

Didier Engineering GmbH: *See—*

Flockenhaus, Claus; Galow, Manfred; Meckel, Joachim F.; and Joseph, Horst G., 4,373,997, Cl. 202-230.000.

Dietz, Peter W.: *See—*

Jones, Thomas B.; Morgan, Morris H.; and Dietz, Peter W., 4,373,272, Cl. 34-57.00A.

Dietzsch, Kurt, to Sueddeutsche Kuehlerfabrik Julius Fr. Behr GmbH & Co. KG. Deformable light-weight housing structure. 4,373,665, Cl. 237-12.30A.

Diffracto Ltd.: *See—*

Pryor, Timothy R.; Hockley, Bernard; Liptay-Wagner, Nick; Hageniers, Omer L.; and Pastorius, W. J., 4,373,804, Cl. 356-1.000.

DiGiacomo, Peter M.: *See—*

Dines, Martin B.; and DiGiacomo, Peter M., 4,374,242, Cl. 528-395.000.

Dines, Martin B.; and DiGiacomo, Peter M., to Occidental Research Corporation. Layered organoarsenous inorganic polymers. 4,374,242, Cl. 528-395.000.

Discovision Associates: *See—*

Winslow, John S.; and Dakin, Wayne R., 4,374,323, Cl. 250-201.000.

Displaymor Manufacturing Company, Inc.: *See—*

Monroe, John E., 4,373,355, Cl. 62-256.000.

Dixon, Katharine N.: *See—*

Wolfe, Richard M.; and Dixon, Katharine N., 4,373,222, Cl. 5-431.000.

Dochterman, Richard W., to General Electric Company. Motor mounting arrangement, device for mounting a motor, and methods. 4,373,696, Cl. 248-604.000.

Dr. C. Otto & Comp. G.m.b.H.: *See—*

Mertens, Walter; Thubeauville, Heinz; and Glittenberg, Wilhelm, 4,373,244, Cl. 29-402.080.

Dr. Carl Hahn G.m.b.H.: *See—*

Friese, Axel; and Simunek, Frantisek, 4,373,631, Cl. 206-438.000.

Doliber, Darrel L.; and Keil, O'Dell M., to Litton Systems Inc. Adjustment mechanism. 4,373,269, Cl. 33-246.000.

Dolman, Hendrik; and Kuipers, Johannes, to Duphar International Research B.V. 2-Arylimino-imidazolidines, compositions containing same, and method of use thereof. 4,374,143, Cl. 424-273.00R.

Domazer, Hans-Gunter: *See—*

Buttner, Gunter; Domazer, Hans-Gunter; and Eggert, Horst, 4,373,947, Cl. 75-0.5BB.

Donze, Michel, to Etablissements Somalor-Ferrari "Somafer". Method of removing cracks, and multiple-shape torch for carrying out the method. 4,373,969, Cl. 148-9.500.

Dorosz, Adolph S.; Kirwan, Patrick N.; and Szydlek, Nicholas P., to USM Corporation. Method and machine for versatile stitching. 4,373,458, Cl. 112-121.120.

Dorsey, Glenn F., to Litton Systems, Inc. Single channel optical slip ring. 4,373,779, Cl. 350-96.210.

Dotz, Karl H., to Hoffmann-La Roche Inc. Process for preparing vitamin K. 4,374,290, Cl. 585-16.000.

Doucet, Jos, to Raychem Corporation. Adhesive composition. 4,374,231, Cl. 525-179.000.

Dougherty, Philip H.: *See—*

Gallagher, John P.; and Dougherty, Philip H., 4,374,211, Cl. 523-156.000.

Dougherty, William R.: *See—*

van Dyke, Martin J.; Colby, Dwight D.; and Dougherty, William R., 4,373,390, Cl. 73-304.00C.

Douglas, Raymond J.; May, Herbert; Poznick, Jeffrey B.; and Sweet, Roger H., to Mattel, Inc. Toy trap door mechanism. 4,373,289, Cl. 46-1.00R.

Dow Chemical Company, The: *See—*

Meyer, Louis W., 4,374,222, Cl. 524-241.000.

Socha, Gregory E., 4,373,959, Cl. 106-194.000.

Dow Corning Corporation: *See—*

Gaul, John H.; and Weyenberg, Donald R., 4,374,182, Cl. 428-446.000.

Draenert, Klaus, to Merck Patent Gesellschaft mit Beschrankter Haftung. Implantation materials and a process for the production thereof. 4,373,217, Cl. 3-1.900.

Dravo Corporation: *See—*

Kilian, Alois, 4,373,946, Cl. 75-5.000.

Dresser Industries, Inc.: *See—*

Cope, Geoffrey W., 4,373,446, Cl. 105-224.100.

Drost, Jim L.; and Gordin, Myron K., to Muscatine Lighting Mfg. Co., Inc. Ballast mounting means. 4,374,407, Cl. 362-432.000.

Drzewiecki, Tadeusz M., to United States of America, Army. Broad band flueric amplifier. 4,373,553, Cl. 137-840.000.

DSH: *See—*

Pallotta, Frank, 4,373,448, Cl. 108-29.000.

DuBois, Chester G.: *See—*

Billingsley, Henry C.; and DuBois, Chester G., 4,373,479, Cl. 123-187.50R.

Dubroeucq, Georges; Lacombat, Michel; and Brevignon, Michele, to Thomson-CSF. Illuminator for supplying a divergent illuminating beam from a predetermined area of a plane. 4,373,774, Cl. 350-6.600.

Duchemin, Michel, to Ressorts Industrie. Devices for elastically fastening rail-way rails by locking. 4,373,667, Cl. 238-349.000.

Dugan, Robert J.: *See—*

Cormier, Roger L.; Dugan, Robert J.; Guyette, Richard R.; and Wansor, David H., 4,374,415, Cl. 364-200.000.

Dugan, William P., to General Dynamics, Pomona Division. Fine line circuitry probes and method of manufacture. 4,374,003, Cl. 204-11.000.

Dukhovskoi, Evgeny A.: *See—*

Gorelik, Rudolf A.; Dukhovskoi, Evgeny A.; Kleiman, Alexandr M.; Kleimenov, Nikolai A.; Markevich, Andrei M.; Ponomarev, Ardalion N.; Silin, Askold A.; Skok, Valentina M.; Talroze, Viktor L.; Khomyakov, Anatoly V.; and Lyapunov, Andrei Y., 4,374,180, Cl. 428-421.000.

Dunlop Limited: *See—*

Fallows, John C. J.; and Harvey, Richard G., 4,374,208, Cl. 521-109.000.

Dunn, William H.; Garron, Stephen A.; Horey, Leonard I.; and Wurst, John W., to Singer Company, The. Electronically controlled sewing machine arranged to sew a sequence of stitch patterns. 4,373,459, Cl. 112-158.00E.

Dunnavant, William R.; Field, Richard E.; and Borgnaes, Dan, to Ashland Oil, Inc. Thermosetting resinous molding compositions. 4,374,229, Cl. 525-28.000.

Duphar International Research B.V.: *See—*

Dolman, Hendrik; and Kuipers, Johannes, 4,374,143, Cl. 424-273.00R.

Du Pont de Nemours, E. I., and Company: *See—*

Beasley, John K.; and Urban, Edward J., 4,374,224, Cl. 524-298.000.

Heinsohn, George E., 4,374,273, Cl. 564-479.000.

Durant, Graham J.; Emmett, John C.; and Ganellin, Charon R., to Smith Kline & French Laboratories Limited. Imidazoline containing imidazoles. 4,374,251, Cl. 548-309.000.

Durham, M. E. Automatic fuel control system. 4,373,850, Cl. 414-699.000.

Durham, Roger O. Drawbolt bearing support for bicycle pedals. 4,373,760, Cl. 308-179.500.

Duriron Company, Inc., The: *See—*

Brown, Robert J.; and Shepherd, Kenneth D., 4,373,543, Cl. 137-74.000.

Duskinfranchise Kabushiki Kaisha: *See—*

Bandai, Shinji; Kajimaki, Masao; Nakajima, Yoshihiro; Yagi, Akira; and Nishimura, Haruo, 4,373,224, Cl. 15-1.50A.

Dyson, James. Vacuum cleaning appliances. 4,373,228, Cl. 15-350.000.

E. R. Squibb & Sons, Inc.: *See—*

Petrillo, Edward W., Jr., 4,374,131, Cl. 424-200.000.

Earthquake Preparedness Co., Inc.: *See—*

Evans, George Q., 4,373,307, Cl. 52-167.000.

Eastman, James M., to Bendix Corporation, The. Flow regulating shaft seal for an air motor. 4,373,858, Cl. 415-112.000.

Eastman Kodak Company: *See—*

Herz, Arthur H., 4,374,196, Cl. 430-505.000.

Hutchinson, William J., 4,374,195, Cl. 430-499.000.

Kim, Chang-Kyu; and Maggiulli, Cataldo A., 4,374,253, Cl. 548-360.000.

Larkins, Thomas H.; Polichnowski, Stanley W.; Tustin, Gerald C.; and Young, David A., 4,374,070, Cl. 260-549.000.

Larkins, Thomas H., Jr., 4,374,265, Cl. 560-263.000.

McGuckin, Hugh G.; Hartman, Susan E.; and Specht, Donald P., 4,374,194, Cl. 430-199.000.

Mir, Jose M., 4,374,397, Cl. 358-75.000.

Eaton Corporation: *See—*

Bradshaw, Cyril E., 4,373,495, Cl. 123-568.000.

Buente, Stephen M.; and Hillebrand, George A., 4,373,477, Cl. 123-90.550.

Goscenski, Edward J., Jr., 4,373,482, Cl. 123-198.00R.

Eberts, Allen F.: *See—*

Kite, Kenneth M.; Eberts, Allen F.; and Cocovich, Joseph A., 4,373,722, Cl. 273-85.00G.

Eckelmann, Gunther, to Pillard, Inc. Burner for a kiln. 4,373,900, Cl. 431-182.000.

Economou, Peter: *See—*

Thompson, Thomas D.; Gergel, John F.; and Economou, Peter, 4,374,203, Cl. 501-148.000.

Edwards, Bryant, to Illinois Tool Works Inc. Resilient nestable cup. 4,373,634, Cl. 206-520.000.

Edwards, Robert E.; McKee, Donald H.; and Brown, Claude D., to Roy M. Moffitt Company, The. Skin washer. 4,373,363, Cl. 69-28.000.

Edwin Cooper, Inc.: *See—*

Malec, Robert E., 4,374,033, Cl. 252-49.600.

Effland, Richard C.; Davis, Larry; and Klein, Joseph T., to Hoechst-Roussel Pharmaceuticals Inc. Spiro[benzofuranisoquinoline]s and their use as pharmaceuticals. 4,374,137, Cl. 424-258.000.

Eggert, Horst: *See—*

Buttner, Gunter; Domazer, Hans-Gunter; and Eggert, Horst, 4,373,947, Cl. 75-0.5BB.

Egli, Alwin, to Platmanufaktur AB. Container with lid. 4,373,317, Cl. 53-412.000.

Ehrlinger, Friedrich; and Meyerle, Michael, to Zahnradfabrik Friedrichshafen A.G. Hydrostatic-mechanical gear unit. 4,373,359, Cl. 74-687.000.

Eicken, Karl; and Wuerzer, Bruno, to BASF Aktiengesellschaft. Herbicidal agents based on acetanilides. 4,373,945, Cl. 71-92.000.

Eida, Tsuyoshi; Yano, Yasuhiro; Matsufuji, Yohji; Haruta, Masahiro; and Ohta, Tokuya, to Canon Kabushiki Kaisha. Recording liquid and method for producing the same. 4,373,954, Cl. 106-20.000.

El Paso Polyolefins Company: *See—*

Allan, John L. H.; Finestone, Arnold B.; and Roderick, John J., 4,374,230, Cl. 525-134.000.

El-Bourini, Refki M.: *See—*

Saperstein, Zalman P.; El-Bourini, Refki M.; and Munch, John E., Jr., 4,373,578, Cl. 165-141.000.

Electronic Memories and Magnetics Corporation: *See—*

Kenner, Bernard A.; and Conaway, John R., 4,374,432, Cl. 365-209.000.

Electrostatic Equipment Company: *See—*

McMahon, Roy C., 4,373,494, Cl. 123-538.000.

Elf France: *See—*

Maldonado, Paul; Nouguier, Robert; Fayard, Jean-Claude; and Leger, Robert, 4,374,282, Cl. 568-672.000.

Elhaus, Friedrich W.; and Hilge, Bernhard, to Elhaus, Friedrich Wilhelm; and Prolizenz A.G. Apparatus for heat treatment of material to be worked on, especially of aluminum or magnesium alloys. 4,373,706, Cl. 266-252.000.

Elhaus, Friedrich Wilhelm: *See—*

Elhaus, Friedrich W.; and Hilge, Bernhard, 4,373,706, Cl. 266-252.000.

Eli Lilly and Company: *See—*

Ayers, Grover W., 4,373,263, Cl. 30-294.000.

Elitzsch, Robert: *See—*

Coustre, Andre; Elitzsch, Robert; and Caullier, Jean-Claude, 4,374,424, Cl. 364-497.000.

Ellis, David G.: *See—*

Bomers, Joseph J. P.; Ellis, David G.; Jansen, Johann J.; and Bijen, Jan M. J. M., 4,373,981, Cl. 156-164.000.

Ellis, Howard F.; and Fishman, Herbert, to General Electric Company. Zinc oxide varistor composition not containing silica. 4,374,049, Cl. 252-519.000.

Elser, Dieter, to Zahnradfabrik Friedrichshafen, AG. Auxiliary steering for motor vehicles. 4,373,598, Cl. 180-143.000.

Elsworth, Robert M., to Elsworth, Robert M. Apparatus for filling caulking tubes. 4,373,560, Cl. 141-129.000.

Elverum, John A.: *See—*

Stephan, James E.; Boduch, Paul A.; and Elverum, John A., 4,374,076, Cl. 264-19.000.

Elwell, Michael J.: *See—*

Campbell, Stephen W.; Cragg, Eric E.; Elwell, Michael J.; and Johnson, Raymond A., 4,374,188, Cl. 429-187.000.

Embosograph Display Mfg. Co.: *See—*

Swartz, William M., 4,373,283, Cl. 40-564.000.

Emerson Electric Co.: *See—*

Krause, James A.; and Kitsch, Edward A., 4,373,937, Cl. 55-118.000.

EMI Limited: *See—*

Pullen, Geoffrey J.; Pemberton, John A.; and Brown, Colin J., 4,373,319, Cl. 53-573.000.

Emmett, John C.: *See—*

Durant, Graham J.; Emmett, John C.; and Ganellin, Charon R., 4,374,251, Cl. 548-309.000.

Endo, Akinori; and Kato, Hirokazu, to Nippon Gakki Seizo Kabushiki Kaisha. Wave generator for electronic musical instrument. 4,373,416, Cl. 84-1.010.

Enfors, Sven-Olof. Oxygen stabilized enzyme electrode. 4,374,013, Cl. 204-195.00B.

Engeler, William E., to General Electric Company. Signal comparator apparatus. 4,374,334, Cl. 307-355.000.

Engelhard Minerals & Chemicals Corporation: *See—*

Bartholic, David B., 4,374,021, Cl. 208-251.00R.

English Electric Valve Company Limited: *See—*

Howorth, Jonathan R., 4,374,325, Cl. 250-213.0VT.

Enhancement Systems, Inc.: *See—*

Wolfe, Richard M.; and Dixon, Katharine N., 4,373,222, Cl. 5-431.000.

Enoki, Shigenaga: *See—*

Tomita, Takao; Yamamoto, Hitoshi; Enoki, Shigenaga; Goto, Isamu; and Hashimoto, Takeshi, 4,373,602, Cl. 180-227.000.

Ensinger, James W., to Zenith Radio Corporation. Insertion of non-synchronous data into vertical interval. 4,374,399, Cl. 358-147.000.

Environmental Sciences Associates, Inc.: *See—*

Matson, Wayne R., 4,374,041, Cl. 436-60.000.

Erlandson, Roger S. Archery arm guard. 4,373,213, Cl. 2-16.000.

Ernst Mohrbach KG: *See—*

Mohrbach, Hans, 4,373,413, Cl. 83-123.000.

Errede, Louis A.; Stoesz, James D.; and Winter, George D., deceased (by Upton, Jenny, personal representative), to Minnesota Mining and Manufacturing Company. Composite wound dressing. 4,373,519, Cl. 128-156.000.

Escher Wyss Limited: *See—*

Guttinger, Heinz, 4,373,238, Cl. 29-116.0AD.

Essex Group, Inc.: *See—*

McGregor, Charles W.; and Summers, Stephen E., 4,374,221, Cl. 524-94.000.

Etablissements Somalor-Ferrari "Somafer": *See—*

Donze, Michel, 4,373,969, Cl. 148-9.500.

Ethyl Corporation: *See—*

Kao, James T. F.; and Jensen, Wayne D., 4,374,254, Cl. 548-527.000.

Kao, James T. F.; and Farritor, Robert E., 4,374,255, Cl. 548-531.000.

Kao, James T. F.; and Wiegand, Karl E., 4,374,256, Cl. 548-561.000.

Euteco Impianti S.p.A.: *See—*

Messina, Giuseppe; Moretti, Mario D.; and Lorenzoni, Loreno, 4,374,279, Cl. 568-558.000.

Messina, Giuseppe; Moretti, Mario D.; and Lorenzoni, Loreno, 4,374,280, Cl. 568-558.000.

Evans, George Q., to Earthquake Preparedness Co., Inc. Adjustable earthquake backstop support for mobile homes. 4,373,307, Cl. 52-167.000.

Evans, William H.: *See—*
Cardarelli, Nathan F.; and Evans, William H., 4,374,126, Cl. 424-81.000.
Everitt, Delmar K.: *See—*
Goldfarb, Adolph E.; and Everitt, Delmar K., 4,373,290, Cl. 46-44.000.
Eversman Mfg. Company, The: *See—*
Wittrock, Michael C., 4,373,590, Cl. 172-78.000.
Ewen, James H.; McClellan, Thomas R.; McMillin, Michael H.; and Murray, Pat L., to Upjohn Company, The. Polyurea-polyurethane from a mixture of a polyol, an aromatic diamine, and an isocyanate-terminated prepolymer. 4,374,210, Cl. 521-159.000.
Exxon Production Research Co.: *See—*
Bednar, John M.; Postler, Daniel P.; and Jones, Terry V., 4,373,582, Cl. 166-65.00R.
F. P. Rosback Company: *See—*
Glendening, Major D., 4,373,985, Cl. 118-103.000.
Fabris, Mario. Roller entry guides for rod mills. 4,373,367, Cl. 72-250.000.
Fairchild Camera & Instrument: *See—*
Caldwell, Robert E., 4,373,252, Cl. 29-576.00B.
Fairchild Camera & Instrument Corp.: *See—*
Vora, Madhukar B.; and Rust, Werner F., 4,374,011, Cl. 204-192.0EC.
Falater, Scott L.: *See—*
Citta, Richard W.; and Falater, Scott L., 4,374,437, Cl. 455-164.000.
Fallows, John C. J.; and Harvey, Richard G., to Dunlop Limited. Polyether-urethane foams. 4,374,208, Cl. 521-109.000.
Fanslow, Charles E. Method and apparatus assembling and nailing boards together. 4,373,651, Cl. 227-3.000.
Faris, Bernard L. Apparatus for suspending a planter. 4,373,695, Cl. 248-318.000.
Farnham, Robert A., to Chevron Research Company. Method and apparatus for uniform flow through radial reactor centerpipes. 4,374,094, Cl. 422-218.000.
Farooq, Saleem: *See—*
Wehner, Wolfgang; Farooq, Saleem; and Kostler, Hans-Gunter, 4,374,145, Cl. 424-278.000.
Farrant, Herbert H., to Burrowes, John Kenneth. Building elements and building methods. 4,373,315, Cl. 52-522.000.
Farrell, John D.: *See—*
Bouchard, James P.; and Farrell, John D., 4,373,955, Cl. 106-88.000.
Farritor, Robert E.: *See—*
Kao, James T. F.; and Farritor, Robert E., 4,374,255, Cl. 548-531.000.
Faulring, Gloria M.; Fitzgibbon, Alan; and Slish, Frank, to Union Carbide Corporation. Addition agents for iron-base alloys. 4,373,948, Cl. 75-57.000.
Faure, Jean-Louis, to ASA S.A. Drive system and drawframe system for a rove drawing process. 4,373,233, Cl. 19-236.000.
Fayard, Jean-Claude: *See—*
Maldonado, Paul; Nouguier, Robert; Fayard, Jean-Claude; and Leger, Robert, 4,374,282, Cl. 568-672.000.
Febvret, Thierry: *See—*
Boutteville, Raymond; and Febvret, Thierry, 4,373,385, Cl. 73-146.500.
Fechtig, Bruno: *See—*
Kocsis, Karoly; Schneider, Peter; Fechtig, Bruno; and Scartazzini, Riccardo, 4,374,134, Cl. 424-246.000.
Fedders Corporation: *See—*
Anzalone, Carmen J., 4,373,353, Cl. 62-200.000.
Feldman, Allan M.: *See—*
Trenbeath, Steven L.; Novak, Robert W.; and Feldman, Allan M., 4,374,107, Cl. 423-265.000.
Fellowes Manufacturing: *See—*
Klaus, Gerald R.; and Williams, Thomas E., 4,373,449, Cl. 108-60.000.
Fenyes, Joseph G. E.; and Pera, John D., to Buckman Laboratories, Inc. Aminoalkylenephosphonic acids and salts thereof and their use in aqueous systems. 4,374,040, Cl. 252-389.00A.
Fera, Victor, to Sage Manufacturing Co., Inc. One-piece buckle and keeper assembly. 4,373,236, Cl. 29-3.000.
Ferris, Donald L.; and Ogle, Peter C., to United Technologies Corporation. Rotor blade shaft integrity monitoring system. 4,373,862, Cl. 416-61.000.
Fesko, Donald G., to Ford Motor Company. Room temperature cure polyester laminates. 4,374,170, Cl. 428-224.000.
Fey, Rainer. Control circuit for a part which is moved in an oscillating manner by an electric drive. 4,374,330, Cl. 307-132.00E.
Fiala, Werner: *See—*
v.Eckardstein, Karl-Ernst; Fiala, Werner; and Schwing, Friedrich, 4,373,225, Cl. 15-104.06A.
Fiber Industries, Inc.: *See—*
Langley, Jeffrey T., 4,374,228, Cl. 524-599.000.
Ficht GmbH: *See—*
Schindler, Manfred; Ficht, Reinhold; and Vogt, Hermann, 4,373,474, Cl. 123-56.00B.
Ficht, Reinhold: *See—*
Schindler, Manfred; Ficht, Reinhold; and Vogt, Hermann, 4,373,474, Cl. 123-56.00B.
Fickelscher, Kurt G. Elastic coupling. 4,373,925, Cl. 464-158.000.
Fidelity Electronics, Ltd.: *See—*
Nelson, Ronald C.; and Merrick, Richard L., Jr., 4,373,719, Cl. 273-1.00E.
Field, Richard E.: *See—*
Dunnavant, William R.; Field, Richard E.; and Borgnaes, Dan, 4,374,229, Cl. 525-28.000.
Fifolt, Michael J.; and Foster, Arthur M., to Occidental Chemical Corporation. Ammonium salts of fluorophthalamic acids and method of preparation. 4,374,266, Cl. 562-456.000.
Fifolt, Michael J.; and Foster, Arthur M., to Occidental Chemical Corporation. Fluorophthalamic acids and method of preparation. 4,374,267, Cl. 562-456.000.
Fillon, Marc. Devices and method for delivery of solder and brazing material. 4,373,657, Cl. 228-229.000.
Filterwerk Mann & Hummel GmbH: *See—*
Bendig, Lothar, 4,373,499, Cl. 123-574.000.
Finestone, Arnold B.: *See—*
Allan, John L. H.; Finestone, Arnold B.; and Roderick, John J., 4,374,230, Cl. 525-134.000.
Finn, Bernard J.: *See—*
Reid, Kenneth H.; and Finn, Bernard J., 4,373,748, Cl. 280-806.000.
Firmenich SA: *See—*
Naf, Regula; Pickenhagen, Wilhelm; and Morris, Anthony F., 4,374,051, Cl. 252-522.00R.
Fischell, Robert E., to Johns Hopkins University, The. Implantable, programmable medication infusion system. 4,373,527, Cl. 128-260.000.
Fischer, Charles P.: *See—*
Piscitelli, R. Amelia; Hemmer, Valentine J.; Fischer, Charles P.; and Shepler, Eric F., 4,373,773, Cl. 339-262.00R.
Fischer, Harry C.: *See—*
Tyree, Lewis, Jr.; and Fischer, Harry C., 4,373,345, Cl. 62-79.000.
Fish, Daniel C. E., to Leigh Flexible Structures Limited. Fillable structure. 4,373,462, Cl. 114-74.00R.
Fisher, Donald L.: *See—*
Gardner, Kenneth L.; Gootzait, Edward; Maciejewski, Edward T.; and Fisher, Donald L., 4,373,451, Cl. 110-101.0CC.
Fishman, Herbert: *See—*
Ellis, Howard F.; and Fishman, Herbert, 4,374,049, Cl. 252-519.000.
Fishman, Walter; and Jenkins, Theron W., Jr., to Leeds & Northrup Company. Digital drive unit regulator. 4,374,351, Cl. 318-600.000.
Fitch, John L.; and Mullins, Lynn D., to Mobil Oil Corporation. Method of solvent flooding to recover viscous oils. 4,373,585, Cl. 166-263.000.
Fitzgibbon, Alan: *See—*
Faulring, Gloria M.; Fitzgibbon, Alan; and Slish, Frank, 4,373,948, Cl. 75-57.000.
Flanagan, James L., to Bell Telephone Laboratories, Incorporated. Spectrum division/multiplication communication arrangement for speech signals. 4,374,304, Cl. 179-15.55R.
Flanagan, Joseph E.; and Haury, Vernon E., to Rockwell International Corporation. Gun propellant containing nitroaminoguanidine. 4,373,976, Cl. 149-92.000.
Fleissner, Hans, to Vepa AG. Apparatus for the continuous washing of lengths of textile material. 4,373,362, Cl. 68-9.000.
Fleming, Joseph T.: *See—*
Smith, Harvey A.; and Fleming, Joseph T., 4,373,377, Cl. 73-23.000.
Flint & Walling, Inc.: *See—*
Robinson, Jimmie R., 4,373,849, Cl. 414-408.000.
Flockenhaus, Claus; Galow, Manfred; Meckel, Joachim F.; and Joseph, Horst G., to Didier Engineering GmbH. Apparatus for the transfer and quenching of coke. 4,373,997, Cl. 202-230.000.
FMC Corporation: *See—*
Buchta, Ervin A., 4,373,700, Cl. 251-214.000.
Foley, Ted: *See—*
Ulin, Roy A.; Foley, Ted; and Shah, Hasmukh, 4,373,629, Cl. 206-350.000.
Forbes, Brian K.: *See—*
Catiller, Robert D.; and Forbes, Brian K., 4,374,416, Cl. 364-200.000.
Catiller, Robert D.; and Forbes, Brian K., 4,374,418, Cl. 364-200.000.
Forbes, Donald R.; and Forbes, Edson A. Spreader control. 4,373,668, Cl. 239-74.000.
Forbes, Edson A.: *See—*
Forbes, Donald R.; and Forbes, Edson A., 4,373,668, Cl. 239-74.000.
Ford Motor Company: *See—*
Dickie, Ray A.; Holubka, Joseph W.; and Qaderi, S. Burhan A., 4,374,213, Cl. 523-416.000.
Fesko, Donald G., 4,374,170, Cl. 428-224.000.
Gandhi, Haren S.; and Adams, Karen M., 4,374,103, Cl. 423-213.500.
Giardini, Dante S., 4,373,671, Cl. 239-585.000.
Kaufman, Sydney M., 4,373,675, Cl. 241-23.000.
Liu, You C., 4,373,371, Cl. 72-379.000.
Rado, William G., 4,373,501, Cl. 123-589.000.
Sabel, Gustav, 4,373,618, Cl. 192-4.00B.
Vong, Sandy T. S., 4,374,156, Cl. 427-8.000.
Washburn, William J.; Thompson, Hugh B.; and La Fever, Clifford E., 4,373,422, Cl. 89-33.0CA.
Foreman, Brian E.; and Grooms, John M., to Burton Mechanical Contractors Inc. Vacuum sewage transport system. 4,373,838, Cl. 406-14.000.
Foresto, Samuel. Apparatus and method for utilizing hot waste gases. 4,373,453, Cl. 110-216.000.

Forknall, John P.: *See—*
Greener, Brian; Pedder, Simon J.; and Forknall, John P., 4,373,759, Cl. 308-187.200.
Forterre, Gerard, to Thomson-CSF. Non-reciprocal microwave-frequency device for high-level operation. 4,374,367, Cl. 333-24.100.
Foster, Arthur M.: *See—*
Fifolt, Michael J.; and Foster, Arthur M., 4,374,266, Cl. 562-456.000.
Fifolt, Michael J.; and Foster, Arthur M., 4,374,267, Cl. 562-456.000.
Foster, Dean H.; and Silverman, Harold, to Pitney Bowes Inc. Inserter feeder assemblies. 4,373,711, Cl. 271-171.000.
Foster Poultry Farms: *See—*
Harding, Robert R.; and Stuermer, Walter L., 4,373,232, Cl. 17-11.000.
Foundry & Steel, Inc.: *See—*
McKinley, John T., 4,373,927, Cl. 474-74.000.
Fouss, James L.; Rosenbaum, Larry A.; and Child, James L., Jr., to Hancor, Inc. Method and apparatus for manufacturing expanded and layered semiround plastic tubings. 4,374,079, Cl. 264-46.100.
Fox, Robert B.: *See—*
Kim, Oh-Kil; and Fox, Robert B., 4,374,048, Cl. 252-500.000.
Fram Europe Limited: *See—*
Mules, Robert S., 4,373,635, Cl. 206-525.000.
Framatome: *See—*
Lebouc, Bernard, 4,373,855, Cl. 414-744.00R.
Frame, Robert R., to UOP Inc. Method of reactivating a catalytic composite of a carrier material and a mercaptan oxidation catalyst. 4,374,042, Cl. 252-412.000.
France Bed Co., Ltd.: *See—*
Masuda, Teruo; Morita, Masayasu; Yamaguchi, Kazuyuki; and Harada, Yoshikazu, 4,373,516, Cl. 128-57.000.
Frank, Charles E. Disk throwing game. 4,373,734, Cl. 273-411.000.
Franklin, Grover C., Jr. Method for separating a dispersed phase from a continuous phase. 4,374,030, Cl. 210-758.000.
Frederick, Roderick J. Conveyor to interfit with a loaded shopping cart and to move portions of the load, on demand of a checker, to the front of the cart, for removal, price scanning, and bagging, by the checker at a checkout stand. 4,373,611, Cl. 186-64.000.
Frederick, Sherman B.: *See—*
Kimzey, Paul W.; and Frederick, Sherman B., 4,373,227, Cl. 15-347.000.
Fricke, Hans; Kiess, Jurgen; and Schulmeyer, Lutz, to International Standard Electric Corporation. Decoupling arrangement for non-insulated AC track circuits in railway systems. 4,373,691, Cl. 246-34.0CT.
Fricke, Hans J., to Robert Bosch GmbH. Glide shoe of a hydraulic piston machine. 4,373,428, Cl. 92-159.000.
Frieder, Leonard P., Jr., to Gentex Corporation. Local external communication device for enclosed helmet and mask assembly. 4,374,301, Cl. 179-1.00R.
Friedrich Wilh. Schwing GmbH: *See—*
Schwing, Friedrich, 4,373,875, Cl. 417-517.000.
v.Eckardstein, Karl-Ernst; Fiala, Werner; and Schwing, Friedrich, 4,373,225, Cl. 15-104.06A.
Friese, Axel; and Simunek, Frantisek, to Dr. Carl Hahn G.m.b.H. Tampon pack especially for a coated tampon containing medicaments. 4,373,631, Cl. 206-438.000.
Friggstad Manufacturing Ltd.: *See—*
Friggstad, Terrance, 4,373,455, Cl. 111-86.000.
Friggstad, Terrance, to Friggstad Manufacturing Ltd. Seed boot assembly. 4,373,455, Cl. 111-86.000.
Frik, Martina: *See—*
Bauser, Elisabeth; Frik, Martina; Lochner, Karl S.; and Schmidt, Laurenz, 4,373,988, Cl. 156-622.000.
Frimodig, Carl H., Jr.: *See—*
Geis, William A.; and Frimodig, Carl H., Jr., 4,373,547, Cl. 137-377.000.
Frito-Lay, Inc.: *See—*
Kreager, William D.; and Mason, Stanley I., Jr., 4,373,982, Cl. 156-359.000.
Frost, Barry L.: *See—*
Malott, Theodore A.; and Frost, Barry L., 4,373,403, Cl. 74-337.500.
Fuchs, Josef: *See—*
Grundler, Robert; Fuchs, Josef; and Jenni, Herbert, 4,373,557, Cl. 139-142.000.
Fuderer, Andrija, to Union Carbide Corporation. Constant pressure separation of normal paraffins from hydrocarbon mixtures. 4,374,022, Cl. 208-310.00Z.
Fuji Jukogyo Kabushiki Kaisha: *See—*
Takizawa, Junichi; and Satoh, Nobuo, 4,373,747, Cl. 280-802.000.
Fuji Xerox Co., Ltd.: *See—*
Iyoda, Tetsuo; and Kikuchi, Masatsugu, 4,374,387, Cl. 346-75.000.
Fujikura, Yoshiaki; Inamoto, Yoshiaki; Takaishi, Naotake; and Nakajima, Motoki, to Kao Corporation. Perfume composition. 4,374,052, Cl. 252-522.00R.
Fujioka, Yoshiki: *See—*
Kohzai, Yoshinori; Fujioka, Yoshiki; and Ota, Naoto, 4,374,350, Cl. 318-590.000.
Fujishiro, Takeshi; Takeuchi, Kiyoshi; and Kita, Toru, to Nissan Motor Company, Limited. Vibration sensor for an automotive vehicle. 4,373,378, Cl. 73-35.000.
Fujitsu Fanuc Limited: *See—*
Inaba, Hajimu; and Miyashita, Hideo, 4,374,349, Cl. 318-568.000.
Kohzai, Yoshinori; Oyama, Shigeaki; and Koyama, Tatsuo, 4,374,337, Cl. 310-186.000.
Kohzai, Yoshinori; Fujioka, Yoshiki; and Ota, Naoto, 4,374,350, Cl. 318-590.000.
Fujitsu Limited: *See—*
Higuchi, Mitsuo, 4,374,430, Cl. 365-104.000.
Ono, Chikai; and Toyoda, Kazuhiro, 4,374,431, Cl. 365-174.000.
Sakai, Toshihiro; and Kuhara, Tetsuji, 4,374,410, Cl. 364-200.000.
Fujiwara, Haruyoshi, to Mitsubishi Jukogyo Kabushiki Kaisha. Slice lip forming a smooth continuous surface. 4,373,993, Cl. 162-347.000.
Fujiwara, Hiroshi: *See—*
Matsuura, Tsuyoshi; Fujiwara, Hiroshi; Aihara, Mamoru; Takahashi, Yutaka; and Nakajima, Yoshio, 4,373,796, Cl. 354-173.000.
Fuka, Louis R. Single actuator electronic minicomputer. 4,374,425, Cl. 364-709.000.
Fukahori, Kiyoshi; and Nishikawa, Yukio, to Precision Monolithics, Inc. Tuneable I.C. active integrator. 4,374,335, Cl. 307-521.000.
Fullerton, Robert L. Automatic transmission having a continuously variable drive ratio. 4,373,926, Cl. 474-57.000.
Furukawa Battery Co., Ltd., The: *See—*
Sano, Ichiro, 4,374,187, Cl. 429-175.000.
Furukawa, Satoru: *See—*
Okahashi, Keiji; Motoyama, Masanori; and Furukawa, Satoru, 4,374,311, Cl. 200-269.000.
Furutani, Yoshikazu: *See—*
Yamamoto, Hiroshi; and Furutani, Yoshikazu, 4,373,818, Cl. 356-408.000.
Fushio, Masamori: *See—*
Kamei, Shigeki; Fushio, Masamori; and Hirai, Atuo, 4,373,433, Cl. 100-37.000.
Futaba Denshi Kogyo Kabushiki Kaisha: *See—*
Takagi, Toshinori, 4,374,162, Cl. 427-248.100.
G.F.C. Foam Corporation: *See—*
Stone, Herman; Pauly, Peter D.; and Pcolinsky, Michael P., Jr., 4,374,207, Cl. 521-107.000.
GAF-Huls Chemie GmbH: *See—*
Westernacher, Helmut; and Aertken, Karl, 4,373,999, Cl. 203-6.000.
Gaiser, Robert F., to Bendix Corporation, The. Visual fluid level indicator. 4,373,465, Cl. 116-227.000.
Gallagher, John P.; and Dougherty, Philip H., to Thiokol Corporation. Aramid containing friction materials. 4,374,211, Cl. 523-156.000.
Galley, Richard A.: *See—*
Bryant, David R.; and Galley, Richard A., 4,374,278, Cl. 568-454.000.
Galow, Manfred: *See—*
Flockenhaus, Claus; Galow, Manfred; Meckel, Joachim F.; and Joseph, Horst G., 4,373,997, Cl. 202-230.000.
Gambro Heart-Lung Products AB: *See—*
Stenberg, Kaj O.; Traven, Lars J. C.; Losell, Ingvar F.; and Johnsson, Bo A., 4,374,088, Cl. 422-46.000.
Gandhi, Haren S.; and Adams, Karen M., to Ford Motor Company. Method of using a low cost catalyst system. 4,374,103, Cl. 423-213.500.
Gandini, Giovanni; and Talamona, Enrico. Equipment for the injection molding of spectacles bars of plastic material with metal core. 4,373,884, Cl. 425-126.00R.
Ganellin, Charon R.: *See—*
Durant, Graham J.; Emmett, John C.; and Ganellin, Charon R., 4,374,251, Cl. 548-309.000.
GAO Gesellschaft fur Automation und Organisation mbH: *See—*
Mitzel, Wilhelm, 4,373,712, Cl. 271-272.000.
Garasi, Louis A.; and Hayes, Ronald F., to Gruber Systems, Inc. Cast toilet base structure. 4,373,219, Cl. 4-300.000.
Gardiner, John W.: *See—*
Dahlgren, Harold P.; Sullivan, William A.; Gardiner, John W.; and Taylor, James E., 4,373,442, Cl. 101-207.000.
Gardner, Kenneth L.; Gootzait, Edward; Maciejewski, Edward T.; and Fisher, Donald L., to Kennedy Van Saun Corporation. Apparatus and method for feeding pulverized solid fuel to a burner. 4,373,451, Cl. 110-101.0CC.
Garg, Desh R.: *See—*
Ausikaitis, Joseph P.; and Garg, Desh R., 4,373,935, Cl. 55-33.000.
Garlapaty, Venkat R.; Hall, Michael J.; and Branham, William C., to Tol-O-Matic, Inc. Fluid pressure cylinder. 4,373,427, Cl. 92-88.000.
Garron, Stephen A.: *See—*
Dunn, William H.; Garron, Stephen A.; Horey, Leonard I.; and Wurst, John W., 4,373,459, Cl. 112-158.00E.
Gasparian, George A., to International Telephone and Telegraph Corporation. Fiber dichroic coupler. 4,373,775, Cl. 350-96.150.
Gaston, Harold W.; and Glaser, Donald J., to Glendo Corporation. Tool finishing machine having improved support table. 4,373,299, Cl. 51-122.000.
Gaul, John H.; and Weyenberg, Donald R., to Dow Corning Corporation. Preparation of silicon metal through polymer degradation. 4,374,182, Cl. 428-446.000.
Gaule, Gerhart K.: *See—*
Yarwood, John C.; Gaule, Gerhart K.; and Ungarean, Gary L., 4,373,571, Cl. 164-467.000.
Gauthier, George A.: *See—*
Wallick, William P.; and Gauthier, George A., 4,373,431, Cl. 99-483.000.
Gavenonis, Thomas L.: *See—*
Hall, Harold H., Jr.; Bouchard, Andre C.; Shaffer, John W.; and Gavenonis, Thomas L., 4,374,073, Cl. 264-3.00R.
Gay, Benjamin A., to PPG Industries, Inc. Continuous cutter for a glass fiber chopper. 4,373,650, Cl. 225-97.000.

Gebr. Eickhoff Maschinenfabrik und Eisengiesserei m.b.H.: *See—*
Gehle, Karl; and Schreier, Josef, 4,373,757, Cl. 299-43.000.
Gehle, Karl; and Schreier, Josef, to Gebr. Eickhoff Maschinenfabrik und Eisengiesserei m.b.H. Conveyor trough for a scraper conveyor for use with a mining machine. 4,373,757, Cl. 299-43.000.
Geiger, John H., Jr.: *See—*
Boden, Richard M.; and Geiger, John H., Jr., 4,374,277, Cl. 568-448.000.
Geil, Ronald J., to Gould Inc. Molded plastic control lock knob with push and/or pull feature. 4,373,405, Cl. 74-531.000.
Geis, William A.; and Frimodig, Carl H., Jr., to Shell Oil Company. Dome funnel. 4,373,547, Cl. 137-377.000.
Geiter, Robert: *See—*
Schwartz, Larry A.; Geiter, Robert; and Albertsen, Peter S., 4,373,507, Cl. 126-289.000.
Gelman Sciences Inc.: *See—*
Davis, William J., 4,374,232, Cl. 525-243.000.
Gelu Reutlinger Steinwerk Gerhard Lutz GmbH: *See—*
Lutz, Gerhard, 4,373,309, Cl. 52-182.000.
Gemmill, Robert M.; and Horodysky, Andrew G., to Mobil Oil Corporation. Lubricant composition containing borated oxazoline friction reducer. 4,374,032, Cl. 252-49.600.
Gendronneau, Claude V. L.: *See—*
Camboulives, Andre A. M. L.; Debeneix, Pierre; Gendronneau, Claude V. L.; and Hugnet, Roger P., 4,373,421, Cl. 184-6.400.
General Dynamics, Pomona Division: *See—*
Dugan, William P., 4,374,003, Cl. 204-11.000.
Piesik, Edward T., 4,373,420, Cl. 89-1.812.
General Electric Company: *See—*
Aneja, Viney P., 4,374,283, Cl. 568-724.000.
Arendt, Ronald H., 4,374,117, Cl. 423-593.000.
Crivello, James V.; and Lee, Julia L., 4,374,066, Cl. 260-440.000.
Dochterman, Richard W., 4,373,696, Cl. 248-604.000.
Ellis, Howard F.; and Fishman, Herbert, 4,374,049, Cl. 252-519.000.
Engeler, William E., 4,374,334, Cl. 307-355.000.
Hayden, Stephen C., 4,373,934, Cl. 51-309.000.
Hiltz, Arnold A.; and Moy, Francis L., 4,374,081, Cl. 264-102.000.
Holmes, David G., 4,373,608, Cl. 181-202.000.
Holub, Fred F.; and Hoback, John T., 4,374,214, Cl. 523-466.000.
Johnson, Peter D., 4,373,391, Cl. 73-335.000.
Jones, Thomas B.; Morgan, Morris H.; and Dietz, Peter W., 4,373,272, Cl. 34-57.00A.
Ladusaw, William T., 4,373,352, Cl. 62-196.00C.
Ladusaw, William T., 4,373,882, Cl. 418-270.000.
Loucks, George R.; and Campbell, John R., 4,374,233, Cl. 525-394.000.
Nathan, Bernard D.; and Witter, Donald R., 4,374,005, Cl. 204-15.000.
Noland, Joseph R., 4,373,350, Cl. 62-156.000.
Olashaw, William F.; and Postlethwait, James H., 4,374,405, Cl. 361-355.000.
Peloquin, Arthur V.; and Qurnell, Frank D., 4,374,024, Cl. 210-241.000.
Steigerwald, Robert L.; and Park, John N., 4,374,355, Cl. 320-43.000.
Temple, Victor A. K., 4,374,389, Cl. 357-13.000.
Terhune, James H.; Sturtz, John P.; and Neissel, John P., 4,373,375, Cl. 73-19.000.
General Foods Corporation: *See—*
Cole, Bruce A.; Levine, Harold I.; McGuire, Michael T.; Nelson, Kathleen J.; and Slade, Louise, 4,374,154, Cl. 426-565.000.
Consolazio, George A.; and Pano, Gury, 4,374,063, Cl. 260-118.000.
Lindstrom, Ted R.; and Slade, Louise, 4,374,151, Cl. 426-19.000.
General Motors Corporation: *See—*
Christ, John H., 4,373,871, Cl. 417-310.000.
Coleman, John R., 4,373,333, Cl. 60-578.000.
Cross, William E.; and Plyler, Robert G., 4,373,771, Cl. 339-125.00L.
Hamren, Glen C., 4,373,497, Cl. 123-571.000.
Hayes, John R., 4,373,575, Cl. 165-7.000.
Mathues, Thomas P., 4,373,617, Cl. 192-3.310.
Melinat, Wolfgang, 4,373,615, Cl. 188-73.100.
Neuhalfen, Michael A., 4,373,488, Cl. 123-418.000.
Nitz, Larry T., 4,373,271, Cl. 33-361.000.
Pandzik, Richard T., 4,373,870, Cl. 417-269.000.
Reid, Kenneth H.; and Finn, Bernard J., 4,373,748, Cl. 280-806.000.
Schaefer, Carl F.; and Bedford, Raymond E., 4,374,044, Cl. 252-455.00R.
Smale, Charles H., 4,373,326, Cl. 60-39.161.
Stark, Terrence L., 4,373,330, Cl. 60-311.000.
Thebert, Glenn W., 4,373,859, Cl. 415-159.000.
Williams, Donald L., 4,373,666, Cl. 237-12.30B.
General Tire & Rubber Company, The: *See—*
Shanoski, Henry, 4,374,238, Cl. 528-50.000.
Genese, Joseph N.: *See—*
Mowles, Donald L.; Middaugh, James F.; Rutnarak, Sangvorn; and Genese, Joseph N., 4,373,559, Cl. 141-18.000.
Gentex Corporation: *See—*
Frieder, Leonard P., Jr., 4,374,301, Cl. 179-1.00R.
George, Davis A.: *See—*
Massey, Lester G.; Brabets, Robert I.; Abel, William A.; Anderson, James K.; Labus, Thomas J.; and George, Davis A., 4,373,864, Cl. 417-46.000.
Gerber Garment Technology, Inc.: *See—*
Gerber, Heinz J.; and Pearl, David R., 4,373,412, Cl. 83-24.000.
Gerber, Heinz J.; and Pearl, David R., to Gerber Garment Technology, Inc. Method and apparatus for cutting sheet material with a cutting wheel. 4,373,412, Cl. 83-24.000.
Gergel, John F.: *See—*
Thompson, Thomas D.; Gergel, John F.; and Economou, Peter, 4,374,203, Cl. 501-148.000.
Geuss, Reinhart, to Hoechst Aktiengesellschaft. Process for the manufacture of hydroquinone-monophenyl ethers. 4,374,281, Cl. 568-637.000.
Geyling, Franz T.; and Louzon, Theodore J., to Bell Telephone Laboratories, Incorporated. Pressure coating of fibers. 4,374,161, Cl. 427-160.000.
Gianos, Philip T.: *See—*
Cunningham, Joseph E., Jr.; and Gianos, Philip T., 4,374,321, Cl. 219-497.000.
Giardini, Dante S., to Ford Motor Company. Electromagnetic fuel injector. 4,373,671, Cl. 239-585.000.
Gibbs, Dennis D.: *See—*
Bradley, David J.; Gibbs, Dennis D.; Kostuch, Donald J.; and Martin, James S., 4,374,417, Cl. 364-200.000.
Gibney, Nigel P.: *See—*
Willis, Jeffrey D.; and Gibney, Nigel P., 4,373,342, Cl. 60-748.000.
Giddings & Lewis, Inc.: *See—*
Miller, Leonard A., Jr., 4,373,840, Cl. 414-225.000.
Giepen, Ulrich; and Meyer, Friedhelm, to Robert Bosch GmbH. Automotive electrical network voltage regulation monitoring circuit. 4,374,380, Cl. 340-660.000.
Giles, William L., to Ruan, Incorporated. Method for transporting bulk fluid or particulate material. 4,373,857, Cl. 414-786.000.
Gill, Thomas J.: *See—*
Petit, Peter J.; and Gill, Thomas J., 4,373,909, Cl. 432-109.000.
Gilliom, John W., to UMC Industries, Inc. Apparatus for heating food, such as french fried potatoes. 4,374,318, Cl. 219-400.000.
Givler, Omar R., to Portage Electric Products, Inc. Modified contact strip mounting means for thermostatic switches. 4,374,372, Cl. 337-380.000.
Glaser, Donald J.: *See—*
Gaston, Harold W.; and Glaser, Donald J., 4,373,299, Cl. 51-122.000.
Glaze, Stanley G., to Lucas Industries Limited. Suspension control system for a road vehicle. 4,373,744, Cl. 280-707.000.
Glendening, Major D., to F. P. Rosback Company. Adhesive binder. 4,373,985, Cl. 118-103.000.
Glendo Corporation: *See—*
Gaston, Harold W.; and Glaser, Donald J., 4,373,299, Cl. 51-122.000.
Glick, Frederick J.; and Pedersen, Richard N., to Owens-Illinois, Inc. Removal of glass particles from glass articles. 4,373,944, Cl. 65-23.000.
Glittenberg, Wilhelm: *See—*
Mertens, Walter; Thubeauville, Heinz; and Glittenberg, Wilhelm, 4,373,244, Cl. 29-402.080.
Gloucester Engineering Co., Inc.: *See—*
Church, Robert, 4,373,273, Cl. 34-104.000.
Glover, Herman L.: *See—*
Harrell, Richard G.; Glover, Herman L.; and Cain, Gary L., 4,374,150, Cl. 426-19.000.
GmbH & Co. TRUMA-Geratebau: *See—*
Kreis, Philipp, 4,373,472, Cl. 122-14.000.
Gobrecht, Klaus. Solar energy flux integrator. 4,373,809, Cl. 356-215.000.
Godfrey, Raymond: *See—*
Barrera, Marion; and Godfrey, Raymond, 4,373,674, Cl. 241-15.000.
Goetze AG: *See—*
Morsbach, Martin; Stecher, Friedhelm; and Stocker, Eberhard, 4,373,735, Cl. 277-235.00B.
Goldfarb, Adolph E.; and Everitt, Delmar K., to Goldfarb, Adolph E. Wheeled turbine-powered toy vehicle and launcher apparatus. 4,373,290, Cl. 46-44.000.
Goldman, Holliday L., to Allis-Chalmers Corporation. Method of manufacturing a wedge gate valve. 4,373,242, Cl. 29-157.10R.
Goodard, Errol D.: *See—*
Kulkarni, Ravindra D.; and Goodard, Errol D., 4,374,178, Cl. 428-404.000.
Goodman, Donald; Ceprini, Mario Q.; Hoch, Samuel; and Koral, Marvin, to Tenneco Chemicals, Inc. Aqueous dispersions of free radical-generating polymerization initiators. 4,374,057, Cl. 252-426.000.
Goodman, Robert B.; and Triba, James T., to United Technologies Corporation. Check valve. 4,373,544, Cl. 137-220.000.
Goodyear Aerospace Corporation: *See—*
Boyd, Hugh, 4,373,645, Cl. 222-203.000.
Goodyear Tire & Rubber Company, The: *See—*
Declercq, Pierre J. R., 4,373,567, Cl. 152-405.000.
Goof, Sven K. L. Electric contact device. 4,374,374, Cl. 338-114.000.
Gootzait, Edward: *See—*
Gardner, Kenneth L.; Gootzait, Edward; Maciejewski, Edward T.; and Fisher, Donald L., 4,373,451, Cl. 110-101.0CC.
Gordin, Myron K.: *See—*
Drost, Jim L.; and Gordin, Myron K., 4,374,407, Cl. 362-432.000.
Gorelik, Rudolf A.; Dukhovskoi, Evgeny A.; Kleiman, Alexandr M.; Kleimenov, Nikolai A.; Markevich, Andrei M.; Ponomarev, Ardalion N.; Silin, Askold A.; Skok, Valentina M.; Talroze, Viktor L.; Khomyakov, Anatoly V.; and Lyapunov, Andrei Y. Method for modification of the surface of industrial rubber articles. 4,374,180, Cl. 428-421.000.

Gormley, Donald R.: *See—*
Smith, Robert E.; and Gormley, Donald R., 4,374,014, Cl. 204-260.000.
Goronkin, Herbert, to United States of America, Air Force. Method of making oxide passivated mesa epitaxial diodes with integral plated heat sink. 4,373,255, Cl. 29-580.000.
Gorzynski, Joseph J.: *See—*
Vervoordt, Joseph P.; and Gorzynski, Joseph J., 4,373,476, Cl. 123-80.00D.
Goscenski, Edward J., Jr., to Eaton Corporation. Flexible shaft fan drive. 4,373,482, Cl. 123-198.00R.
Gosche, Matt J.: *See—*
Parker, William R.; and Gosche, Matt J., 4,373,460, Cl. 112-162.000.
Gossalter, Rene. Tube sealing in tube bundle heat exchangers. 4,373,580, Cl. 165-173.000.
Goto, Isamu: *See—*
Tomita, Takao; Yamamoto, Hitoshi; Enoki, Shigenaga; Goto, Isamu; and Hashimoto, Takeshi, 4,373,602, Cl. 180-227.000.
Goto, Kaoru: *See—*
Negishi, Hideo; Goto, Kaoru; and Takaya, Sueji, 4,373,839, Cl. 408-59.000.
Goudreau, Noel; Colevris, Nick; and Southard, Carl, to Trico Products Incorporated. Protective chest shield. 4,373,211, Cl. 2-2.000.
Gouesbet, Gerard, to Agence Nationale de Valorisation de la Recherche (ANVAR). Method and apparatus for the simultaneous measurement of data, including velocity, relating to submicronic particles in a state of flow in a fluid. 4,373,807, Cl. 356-28.500.
Gould Inc.: *See—*
Geil, Ronald J., 4,373,405, Cl. 74-531.000.
Tekippe, Vincent J.; and Lach, Lawrence E., 4,374,328, Cl. 250-458.100.
Gouronnec, Alain; Regreny, Andre; and Treheux, Michel. Multiple fiber forming machine. 4,373,943, Cl. 65-10.100.
Grabowski, Robert C.: *See—*
Lunn, Royston C.; MacAfee, J. Edwin; Grabowski, Robert C.; Renneker, Dennis N.; and Winkler, John M., 4,373,604, Cl. 180-247.000.
Graboyes, Harold; Kasper, Thomas J.; and Vaidya, Praful D., to SK&F Lab Co. Benzyl 5-methyl-4-imidazolecarboxylate. 4,374,252, Cl. 548-343.000.
Grace, Frederick J. Portable off shore well installation apparatus. 4,373,834, Cl. 405-60.000.
Grad-Line, Inc.: *See—*
Schritt, Renaldo F.; and Kenney, Martin J., 4,373,619, Cl. 192-0.090.
Grahl, Paul F. Fishing tip-up. 4,373,287, Cl. 43-17.000.
Gramlich, Walter: *See—*
Heilen, Gerd; Halbritter, Klaus; and Gramlich, Walter, 4,374,274, Cl. 568-313.000.
Granda, Edward J.: *See—*
Klemarczyk, Philip T.; Sanders, James M.; Vock, Manfred H.; Vinals, Joaquin F.; Schmitt, Frederick L.; and Granda, Edward J., 4,374,054, Cl. 252-522.00R.
Grandmont, Robert, to 110707 Canada Ltee. Heat recuperating water heating system. 4,373,473, Cl. 122-20.00B.
Grasselli, R. K.: *See—*
Burrington, J. D.; Grasselli, R. K.; and Kartisek, C. T., 4,374,293, Cl. 585-410.000.
Gray, John D.: *See—*
Meetham, Geoffrey W.; and Gray, John D., 4,374,084, Cl. 420-449.000.
Grazen, Alfred E. Method of producing precision abrasive tools. 4,373,933, Cl. 51-309.000.
Green, Harold A.; Merianos, John J.; and Petrocci, Alfonso N., to Kewanee Industries, Inc. Linear quaternary ammonium polymers. 4,374,244, Cl. 542-476.000.
Greenberger, William, to Hopp Press, Inc., The. Shelf molding clip assembly. 4,373,693, Cl. 248-221.400.
Greene & Kellogg, Incorporated: *See—*
McCombs, Norman R., 4,373,938, Cl. 55-160.000.
Greener, Brian; Pedder, Simon J.; and Forknall, John P., to SKF (U.K.) Limited. Bearing assemblies for conveyor rollers fitted with end covers. 4,373,759, Cl. 308-187.200.
Greenheck Fan Corporation: *See—*
Neitzel, Emery W.; and Schumacher, Jerome A., 4,373,509, Cl. 126-299.00D.
Greiner, Max; Krieger, Klaus; Schiller, Gottfried; Walk, Wolf-Rudiger; and Walz, Ludwig, to Robert Bosch GmbH. Apparatus for controlling an exhaust recirculation device in internal combustion engines. 4,373,496, Cl. 123-569.000.
Gress, Wolfgang: *See—*
Linden, Heinrich; Bornmann, Hans; Gress, Wolfgang; and Wegemund, Bernd, 4,373,964, Cl. 106-308.00Q.
Greutert, Albert, to Maxs AG. Basket filter. 4,374,026, Cl. 210-493.500.
Grevich, John J. Crusher and separator for cans and bottles. 4,373,435, Cl. 100-49.000.
Gribnau, Thomas C. J.; Roeles, Frits; and Leuvering, Johannes H. W., to Akzona Incorporated. Application of water-dispersible hydrophobic dyes or pigments as labels in immunoassays. 4,373,932, Cl. 436-501.000.
Grogg, Thomas A.: *See—*
Crawford, John P., 4,373,831, Cl. 403-318.000.
Groll, Fritz: *See—*
Schober, Karl; and Groll, Fritz, 4,373,751, Cl. 285-137.00R.
Grooms, John M.: *See—*
Foreman, Brian E.; and Grooms, John M., 4,373,838, Cl. 406-14.000.
Groot, Theodorus C.: *See—*
Bakker, Gijsbertus; and Groot, Theodorus C., 4,373,237, Cl. 445-3.000.
Grout, Kenneth M.; and Presby, David W. Gun muzzle loader. 4,373,285, Cl. 42-90.000.
Grover, Donald D.: *See—*
Olson, Gene E.; Thompson, Jerome A.; Grover, Donald D.; Stout, Christopher B.; Becker, Thomas P.; and Kaufman, Glenn A., 4,373,384, Cl. 73-119.00A.
Gruber Systems, Inc.: *See—*
Garasi, Louis A.; and Hayes, Ronald F., 4,373,219, Cl. 4-300.000.
Grundler, Robert; Fuchs, Josef; and Jenni, Herbert, to Aktiengesellschaft Adolph Saurer. Apparatus for picking the shuttles of a loom. 4,373,557, Cl. 139-142.000.
Gryskiewicz, Gregory A.; and Koehler, Raymond A., to UOP Inc. Abrasion resistant, reinforced screen panel member. 4,374,169, Cl. 428-221.000.
GSE, Inc.: *See—*
Barrett, Gary L., 4,373,402, Cl. 73-862.390.
GTE Automatic Electric Laboratories, Inc.: *See—*
Stewart, James A., 4,374,303, Cl. 179-2.0BC.
GTE Automatic Electric Labs Inc.: *See—*
Comfort, Joseph A.; Perry, Thomas J.; and Loos, Michel, 4,374,413, Cl. 364-200.000.
Comfort, Joseph A.; Perry, Thomas J.; and Loos, Michel, 4,374,414, Cl. 364-200.000.
Holden, James R., 4,374,361, Cl. 328-120.000.
GTE Laboratories Incorporated: *See—*
Natansohn, Samuel; and Czupryna, Gary, 4,374,008, Cl. 204-109.000.
Schlafer, John, 4,373,781, Cl. 350-96.290.
GTE Products Corporation: *See—*
Hall, Harold H., Jr.; Bouchard, Andre C.; Shaffer, John W.; and Gavenonis, Thomas L., 4,374,073, Cl. 264-3.00R.
Holmes, James L., 4,373,906, Cl. 431-359.000.
Kim, Tai K.; MacInnis, Martin B.; McClintic, Robert P.; and Vogt, Martin C., 4,374,099, Cl. 423-54.000.
Parent, Edward D., 4,373,952, Cl. 75-244.000.
Guibert, Raul, to Sunset Ltd. Counter-top oven. 4,374,319, Cl. 219-400.000.
Guigley, Paul A., to Wm. G. Leininger Knitting Company. Double sock construction. 4,373,215, Cl. 2-239.000.
Guttinger, Heinz, to Escher Wyss Limited. Support element with flexible head portion. 4,373,238, Cl. 29-116.0AD.
Guyette, Richard R.: *See—*
Cormier, Roger L.; Dugan, Robert J.; Guyette, Richard R.; and Wansor, David H., 4,374,415, Cl. 364-200.000.
H. A. Montgomery Co., Inc., The: *See—*
Wojtowicz, Wesley J., 4,374,168, Cl. 428-212.000.
Haag, Werner O.; and Lago, Rudolph M., to Mobil Oil Corporation. Isomerization of paraffin hydrocarbons using zeolites with high steam-enhanced acidity. 4,374,296, Cl. 585-739.000.
Haagen, Peter H.; and Kline, Christopher R., to Tandy Corporation. Ringer system for a telephone. 4,374,307, Cl. 179-84.00T.
Haas, Franz, Jr.: *See—*
Haas, Franz, Sr.; Haas, Franz, Jr.; and Haas, Johann, 4,373,429, Cl. 99-375.000.
Haas, Franz, Sr.; Haas, Franz, Jr.; and Haas, Johann. Steam sealing strip for water baking plates. 4,373,429, Cl. 99-375.000.
Haas, Johann: *See—*
Haas, Franz, Sr.; Haas, Franz, Jr.; and Haas, Johann, 4,373,429, Cl. 99-375.000.
Haba, Masanori: *See—*
Yoshioka, Nobuyuki; Suzuki, Tsutai; Haba, Masanori; and Koyama, Hideo, 4,374,160, Cl. 427-101.000.
Habisohn, Victor J. Multiple speed control means for a variable speed motor system. 4,374,353, Cl. 318-799.000.
Hageniers, Omer L.: *See—*
Pryor, Timothy R.; Hockley, Bernard; Liptay-Wagner, Nick; Hageniers, Omer L.; and Pastorius, W. J., 4,373,804, Cl. 356-1.000.
Hagiz, Yitzchak, to Sharnoa Ltd. Harvesting apparatus for onions. 4,373,589, Cl. 171-31.000.
Hahn, Kurt L.: *See—*
Allen, Robert J.; Blake, Edward W.; Rao, Manjeshwar S.; and Hahn, Kurt L., 4,373,370, Cl. 72-349.000.
Hahn, Norbert: *See—*
Hipp, Steven J.; and Hahn, Norbert, 4,373,847, Cl. 414-401.000.
Halbritter, Klaus: *See—*
Heilen, Gerd; Halbritter, Klaus; and Gramlich, Walter, 4,374,274, Cl. 568-313.000.
Halgren, John A.: *See—*
Cellitti, Raymond A.; and Halgren, John A., 4,373,973, Cl. 148-12.400.
Hall, Charles B.; McBride, Edward D.; and Young, Robert F., to Outboard Marine Corporation. Marine propulsion device steering mechanism. 4,373,920, Cl. 440-59.000.
Hall, Charles B.; McBride, Edward D.; and Young, Robert F., to Outboard Marine Corporation. Outboard motor with sequentially operating tilt and trim means. 4,373,921, Cl. 440-61.000.
Hall, Dale R., to B. F. Goodrich Company, The. Stabilization of post-chlorinated vinyl chloride polymers by phosphate salts. 4,374,205, Cl. 521-85.000.

Hall, Harold H., Jr.; Bouchard, Andre C.; Shaffer, John W.; and Gavenonis, Thomas L., to GTE Products Corporation. Method of making a heat-sealed pyrotechnic cap. 4,374,073, Cl. 264-3.00R.

Hall, John B.: *See—*

Schreck, Ronald P.; Light, Kenneth K.; Hall, John B.; Schmitt, Frederick L.; Vock, Manfred H.; Schreiber, William L.; Vinals, Joaquin F.; and Kiwala, Jacob, 4,374,055, Cl. 252-522.00R.

Hall, Michael J.: *See—*

Garlapaty, Venkat R.; Hall, Michael J.; and Branham, William C., 4,373,427, Cl. 92-88.000.

Hallada, Calvin J.: *See—*

Sebenik, Roger F.; Hallada, Calvin J.; Barry, Henry F.; and Tsigdinos, George A., 4,374,100, Cl. 423-56.000.

Halliburton Company: *See—*

Toellner, Robert L., 4,373,581, Cl. 166-53.000.

Hallstrom, Bengt O. Method of sterilizing mattresses, laundry sacks and similar articles in a sterilizing apparatus. 4,374,087, Cl. 422-34.000.

Hamaker, John D. Inertial guide and support means for sabre saws. 4,373,264, Cl. 30-374.000.

Hammer, Jeffrey M., to Honeywell Inc. Condition control system for efficient transfer of energy to and from a working fluid. 4,373,663, Cl. 236-15.00R.

Hamren, Glen C., to General Motors Corporation. Exhaust gas recirculation control. 4,373,497, Cl. 123-571.000.

Hancock, Ronald D.; and Mackison, Robert, to British Petroleum Company Limited, The. Process for the production of esters in the presence of a heterogeneous esterification catalyst. 4,374,263, Cl. 560-204.000.

Hancor, Inc.: *See—*

Fouss, James L.; Rosenbaum, Larry A.; and Child, James L., Jr., 4,374,079, Cl. 264-46.100.

Haney, James A., to McDermott Incorporated. Removable closure plate. 4,373,835, Cl. 405-195.000.

Hanley, Gerard L.: *See—*

Viola, Raymond D.; and Hanley, Gerard L., 4,374,368, Cl. 333-128.000.

Hansberry, Charles J., Jr. Combined article mover and worker support. 4,373,761, Cl. 312-250.000.

Hansen, Glen D.: *See—*

Buschbom, Floyd E.; and Hansen, Glen D., 4,373,600, Cl. 180-212.000.

Hansen, Kenneth H.; and Conover, Louis S., Jr., to Nolan Systems, Inc. Apparatus for inserting supplementary material into newspaper jackets. 4,373,710, Cl. 270-55.000.

Hanson, Steven P.; and Breslow, Jeffrey D., to Marvin Glass & Associates. Puzzle with rotatable blocks and face portions slidable therebetween. 4,373,729, Cl. 273-153.00S.

Hanson, Timothy A.; and Smith, David W., to Teledyne Industries, Inc. Apparatus for producing porous shaped products. 4,373,887, Cl. 425-143.000.

Haque, Kazi E.: *See—*

Skeaff, James M.; Ritcey, Gordon M.; Haque, Kazi E.; and Lucas, Bernard H., 4,374,096, Cl. 423-9.000.

Hara, Hiroshi: *See—*

Shimura, Kiichiro; Tamura, Takeo; Kido, Takayoshi; Hara, Hiroshi; and Tanaka, Morimasa, 4,374,348, Cl. 318-443.000.

Harada, Hidefumi: *See—*

Uenishi, Toshiaki; Harada, Hidefumi; Sasaki, Katumasa; Akagi, Akio; and Yamasaki, Takanori, 4,373,963, Cl. 106-304.000.

Harada, Masatoshi: *See—*

Shibata, Shoji; Kumagai, Akira; Harada, Masatoshi; Yano, Singo; Saito, Hiroshi; and Takahashi, Kunio, 4,374,284, Cl. 568-817.000.

Harada, Yoshikazu: *See—*

Masuda, Teruo; Morita, Masayasu; Yamaguchi, Kazuyuki; and Harada, Yoshikazu, 4,373,516, Cl. 128-57.000.

Harding, Robert R.; and Stuermer, Walter L., to Foster Poultry Farms. Poultry cutting machine. 4,373,232, Cl. 17-11.000.

Harle, Anton. Suction bottle for sucking out secretions from wound cavities. 4,373,528, Cl. 128-276.000.

Harmsen, Siegfried: *See—*

Papst, Georg F.; Harmsen, Siegfried; and Wrobel, Gunter, 4,373,861, Cl. 415-213.00C.

Harrell, Richard G.; Glover, Herman L.; and Cain, Gary L., to Cain Food Industries, Inc. Urea yeast food for baking. 4,374,150, Cl. 426-19.000.

Hartman, Don W.: *See—*

Churchill, Richard W.; Hartman, Don W.; Howard, Richard A.; and Markowicz, Victor, 4,373,726, Cl. 273-138.00A.

Hartman, Susan E.: *See—*

McGuckin, Hugh G.; Hartman, Susan E.; and Specht, Donald P., 4,374,194, Cl. 430-199.000.

Hartwig, Walter J.: *See—*

Petit, Peter J.; and Hartwig, Walter J., 4,373,908, Cl. 432-109.000.

Haruta, Masahiro: *See—*

Eida, Tsuyoshi; Yano, Yasuhiro; Matsufuji, Yohji; Haruta, Masahiro; and Ohta, Tokuya, 4,373,954, Cl. 106-20.000.

Harvey, Richard G.: *See—*

Fallows, John C. J.; and Harvey, Richard G., 4,374,208, Cl. 521-109.000.

Haryu, Satoshi: *See—*

Kishida, Nobuhiro; Shishido, Kunihiro; and Haryu, Satoshi, 4,373,891, Cl. 425-174.400.

Hashimoto, Masaru, to Tokyo Shibaura Denki Kabushiki Kaisha. Constant voltage circuit. 4,374,356, Cl. 323-273.000.

Hashimoto, Shinichi, to Tokyo Shibaura Denki Kabushiki Kaisha. Transfer device. 4,373,714, Cl. 271-310.000.

Hashimoto, Takeshi: *See—*

Tomita, Takao; Yamamoto, Hitoshi; Enoki, Shigenaga; Goto, Isamu; and Hashimoto, Takeshi, 4,373,602, Cl. 180-227.000.

Haskell, Theodore H.; and Hutt, Marland P., to Warner-Lambert Company. Antibacterial amide compounds, compositions, and methods of use. 4,374,138, Cl. 424-258.000.

Hasler AG Bern: *See—*

Ulrich, Bohdan, 4,373,764, Cl. 339-75.0MP.

Haslinger, Manfred: *See—*

Resele, Peter; and Haslinger, Manfred, 4,373,741, Cl. 280-279.000.

Hatin, Donald T., to RCA Corporation. Video disc stylus cartridge with protective member. 4,374,434, Cl. 369-170.000.

Hauni-Werke Korber & Co. KG.: *See—*

Steiniger, Wolfgang, 4,373,538, Cl. 131-109.00R.

Haury, Vernon E.: *See—*

Flanagan, Joseph E.; and Haury, Vernon E., 4,373,976, Cl. 149-92.000.

Hausdorfer, Michael, to Robert Bosch GmbH. Chrominance sub-carrier modifier for PAL-color television signals. 4,374,396, Cl. 358-24.000.

Hawkins, James H., to Voorwood Company. Machine for applying transfer foil to a shaped edge of a substrate. 4,373,984, Cl. 156-477.100.

Hayashi, Yoshimasa, to Nissan Motor Company, Limited. Carburetor for an internal combustion engine. 4,373,485, Cl. 123-340.000.

Hayden, Stephen C., to General Electric Company. Metal bonded diamond aggregate abrasive. 4,373,934, Cl. 51-309.000.

Hayes, John R., to General Motors Corporation. Inboard seal mounting. 4,373,575, Cl. 165-7.000.

Hayes Microcomputer Products, Inc.: *See—*

Heatherington, Dale A., 4,374,411, Cl. 364-200.000.

Hayes, Ronald F.: *See—*

Garasi, Louis A.; and Hayes, Ronald F., 4,373,219, Cl. 4-300.000.

Haynes, Louis E. Carburetor air injection system. 4,373,500, Cl. 123-587.000.

Heatherington, Dale A., to Hayes Microcomputer Products, Inc. Relocatable read only memory. 4,374,411, Cl. 364-200.000.

Hebert, Theodore M.: *See—*

Hebert, Thomas H.; and Hebert, Theodore M., 4,373,346, Cl. 62-79.000.

Hebert, Thomas H.; and Hebert, Theodore M. Precool/subcool system and condenser therefor. 4,373,346, Cl. 62-79.000.

Hehl, Karl. Apparatus for injecting confluent streams of plastic material into an injection molding die. 4,373,886, Cl. 425-130.000.

Hehl, Karl. Mechanical safety cover interlock for injection molding machine. 4,373,890, Cl. 425-153.000.

Heibein, Harry P.: *See—*

Bildstein, Carl R.; Heibein, Harry P.; and Mathews, Harlan P., 4,374,386, Cl. 346-75.000.

Heijting, Hendrik G., to Thomassen & Drijver-Verblifa NV. Hydraulic assist stripping. 4,373,368, Cl. 72-344.000.

Heikkenen, Herman J. Method for determining the age or authenticity of timber structures. 4,373,393, Cl. 73-432.00R.

Heikkinen, Leo L. Self-propelled wood processing apparatus. 4,373,564, Cl. 144-366.000.

Heilen, Gerd; Halbritter, Klaus; and Gramlich, Walter, to BASF Aktiengesellschaft. Preparation of α-methylsubstituted carbonyl compounds. 4,374,274, Cl. 568-313.000.

Heinsohn, George E., to Du Pont de Nemours, E. I., and Company. Method for production of methylamines. 4,374,273, Cl. 564-479.000.

Heinz, Theodore A., to Rockwell International Corporation. Differential screw actuator. 4,373,404, Cl. 74-424.80B.

Heinzl, Joachim, to Siemens Aktiengesellschaft. Method and an arrangement for depicting a half-tone image. 4,374,388, Cl. 346-140.00R.

Heinzle, August. Feed arrangement for textile machines. 4,373,457, Cl. 112-96.000.

Helene Curtis Industries, Inc.: *See—*

Newell, Gerald P., 4,374,125, Cl. 424-70.000.

Heller, Carl A.; and Murbach, Warren J., to United States of America, Navy. Process of making a holographic optical article. 4,374,189, Cl. 430-2.000.

Hellmer, George A. Drive mechanism employing wrapped-spring clutch as radial load-bearing means. 4,373,621, Cl. 192-81.00C.

Helm, Arthur E.: *See—*

Brown, George E. R.; Helm, Arthur E.; and Keane, Stuart, 4,373,723, Cl. 273-86.00B.

Hemery, Jacques; and Roger, Bernard P., to U.S. Philips Corporation. Darlington amplifier with excess-current protection. 4,374,364, Cl. 330-298.000.

Hemex, Inc.: *See—*

Klawitter, Jerome J., 4,373,216, Cl. 3-1.500.

Hemmer, Valentine J.: *See—*

Piscitelli, R. Amelia; Hemmer, Valentine J.; Fischer, Charles P.; and Shepler, Eric F., 4,373,773, Cl. 339-262.00R.

Hemmila, Ilkka: *See—*

Soini, Erkki; and Hemmila, Ilkka, 4,374,120, Cl. 436-546.000.

Hendrix, Willie J. Three-wheel vehicle. 4,373,740, Cl. 280-269.000.

Henke, Donald L., to Veda, Inc. Animal feed transport and self-unloading vehicle. 4,373,845, Cl. 414-326.000.

Henkel Kommanditgesellschaft auf Aktien: *See—*

Linden, Heinrich; Bornmann, Hans; Gress, Wolfgang; and Wegemund, Bernd, 4,373,964, Cl. 106-308.00Q.

Henn, Billie R. Riding animal device for children. 4,373,715, Cl. 272-1.00R.

Henry, Arnold W.; Azar, Jack C.; and Sagal, John, Jr., to Xerox Corporation. Fusing member for electrostatographic copiers. 4,373,239, Cl. 29-132.000.

Hepp, James. Lightweight attachment for solar cell array next to a fluorescent tube. 4,374,406, Cl. 362-253.000.

Herberholz, Klaus; and Schmidt, Peter. Lifting device for the transportation of flasks. 4,373,755, Cl. 294-67.00R.

Herbert, M. Linton. Underwater vision device. 4,373,788, Cl. 351-43.000.

Hermes Precisa International S.A.: *See—*

Costa, Jorge, 4,373,708, Cl. 267-136.000.

Herrman, Bradley D.: *See—*

Cannon, Jack W.; Herrman, Bradley D.; and Ramirez, Ramiro, Jr., 4,374,429, Cl. 364-900.000.

Herrmann, Carlo L.; and Ott, Granville E., to Texas Instruments Incorporated. Video system with picture information and logic signal multiplexing. 4,374,395, Cl. 358-22.000.

Herz, Arthur H., to Eastman Kodak Company. Silver halide emulsions containing latent image stabilizing compounds. 4,374,196, Cl. 430-505.000.

Herzog, Rollie R.: *See—*

Stamp, Custis L., Jr.; Herzog, Rollie R.; and Brennan, Michael A., 4,373,351, Cl. 62-160.000.

Hess, Susan V., to Amchem Products, Inc. Coating composition. 4,373,968, Cl. 148-6.200.

Hetherington, Roy, Jr.: *See—*

Roper, Charles R., Jr.; Strattan, John K.; Hetherington, Roy, Jr.; and Hiller, Austin J., 4,373,967, Cl. 148-2.000.

Hetrick, Earl C.; and Winter, Donald T., to Koppers Company, Inc. Ascension pipe heat shield. 4,373,998, Cl. 202-258.000.

Hettich, Allen J. Oil heater. 4,373,905, Cl. 431-330.000.

Hettinger, William P., Jr.; and Kovach, Stephen M., to Ashland Oil, Inc. Process for cracking high-boiling hydrocarbons using high ratio of catalyst residence time to vapor residence time. 4,374,019, Cl. 208-120.000.

Hewlett-Packard Company: *See—*

Nalepa, Roger A.; and Casale, Michael A., 4,373,549, Cl. 137-487.500.

Heybourn, Frank: *See—*

Molins, Desmond W.; Hinchcliffe, Dennis; Heybourn, Frank; and Coyte, Raymond G., 4,373,624, Cl. 198-347.000.

Higo, Moriaki: *See—*

Toda, Haruhiko; Higo, Moriaki; Saga, Hitoshi; and Shinbo, Masafu, 4,374,292, Cl. 585-360.000.

Higuchi, Mitsuo, to Fujitsu Limited. Semiconductor PROM device. 4,374,430, Cl. 365-104.000.

Hilge, Bernhard: *See—*

Elhaus, Friedrich W.; and Hilge, Bernhard, 4,373,706, Cl. 266-252.000.

Hill, Bruce C.; and Stern, Roger A., to Palo Alto Medical Research Foundation. Ultrasonic marker for physiologic diagnosis and method of using same. 4,373,532, Cl. 128-660.000.

Hill, Jack; Sharp, Brian W.; Warburton, Dennis; Walker, Robert B., deceased; and by Walker, Thomas, administrator, to May & Baker Limited. Pyrimidine derivatives. 4,374,136, Cl. 424-251.000.

Hill, Phillip D.: *See—*

Tusinski, Joseph; and Hill, Phillip D., 4,373,298, Cl. 51-105.0LG.

Hillebrand, George A.: *See—*

Buente, Stephen M.; and Hillebrand, George A., 4,373,477, Cl. 123-90.550.

Hiller, Austin J.: *See—*

Roper, Charles R., Jr.; Strattan, John K.; Hetherington, Roy, Jr.; and Hiller, Austin J., 4,373,967, Cl. 148-2.000.

Hiltenbrand, Richard E.: *See—*

Schoenfelder, George A.; Rork, Gerald D.; and Hiltenbrand, Richard E., 4,374,329, Cl. 250-574.000.

Hiltz, Arnold A.; and Moy, Francis L., to General Electric Co. Cure of epoxy systems at reduced pressures. 4,374,081, Cl. 264-102.000.

Hinchcliffe, Dennis: *See—*

Molins, Desmond W.; Hinchcliffe, Dennis; Heybourn, Frank; and Coyte, Raymond G., 4,373,624, Cl. 198-347.000.

Hinn, John S., to Airco, Inc. Methods and apparatus for producing refrigeration. 4,373,344, Cl. 62-62.000.

Hipp, Steven J.; and Hahn, Norbert, to Rite-Hite Corporation. Releasable locking device. 4,373,847, Cl. 414-401.000.

Hirai, Atuo: *See—*

Kamei, Shigeki; Fushio, Masamori; and Hirai, Atuo, 4,373,433, Cl. 100-37.000.

Hirakawa, Hiroshi; Sato, Akio; Takusagawa, Takashi; and Ikeda, Nobumasa, to Bridgestone Tire Co., Ltd. Pneumatic radial tire having a reduced rolling resistance. 4,373,566, Cl. 152-353.00G.

Hirasawa, Kiyosi: *See—*

Kawakubo, Takamasa; and Hirasawa, Kiyosi, 4,374,225, Cl. 524-302.000.

Hirashima, Tsuneaki; and Miyata, Toshiyuki, to Osaka Municipal Government. Method of producing benzimidazolone. 4,374,250, Cl. 548-305.000.

Hirose, Masaaki, to Takeda Riken Kogyo Kabushiki Kaisha. Apparatus for measuring the oscillation frequency of a voltage controlled oscillator. 4,374,358, Cl. 324-78.00D.

Hirota, Hajime: *See—*

Watanabe, Hiroshi; and Hirota, Hajime, 4,374,056, Cl. 252-546.000.

Hiroyuki, Nagai: *See—*

Yamashita, Akira; and Hiroyuki, Nagai, 4,374,398, Cl. 358-143.000.

Hirt, Alfred, to Maschinenfabrik Augsburg-Nurnberg Aktiengesellschaft. Method and apparatus for protecting an arrangement located in an area of highly concentrated radiation. 4,373,512, Cl. 126-418.000.

Hitachi Cable, Ltd.: *See—*

Tatsumi, Aritaka, 4,373,366, Cl. 72-75.000.

Hitachi Kiden Kogyo, Ltd.: *See—*

Kamei, Shigeki; Fushio, Masamori; and Hirai, Atuo, 4,373,433, Cl. 100-37.000.

Hitachi Koki Co., Ltd.: *See—*

Mukoh, Akio; Morishita, Hirosada; Anzai, Masayasu; Tokunaga, Kazuyoshi; and Kikuchi, Yasuo, 4,374,191, Cl. 430-100.000.

Hitachi, Ltd.: *See—*

Kosa, Yasunobu; and Komori, Kazuhiro, 4,373,249, Cl. 29-571.000.

Misono, Masayoshi; and Kitamura, Shigeki, 4,374,344, Cl. 313-479.000.

Mukoh, Akio; Morishita, Hirosada; Anzai, Masayasu; Tokunaga, Kazuyoshi; and Kikuchi, Yasuo, 4,374,191, Cl. 430-100.000.

Nanba, Mitsuo; Ogirima, Masahiko; Kozuka, Hirotsugu; and Shintani, Akira, 4,373,975, Cl. 148-189.000.

Narato, Kiyoshi; Ohtsuka, Keizo; and Niwa, Sadahiko, 4,373,376, Cl. 73-23.100.

Nishimura, Yutaka; Kuroiwa, Hiroshi; Kirisawa, Tadashi; and Oyama, Yoshishige, 4,373,387, Cl. 73-204.000.

Obara, Sanshiro; and Miyashita, Ikuro, 4,373,379, Cl. 73-40.50R.

Tanimoto, Sunao; Tanifuji, Shinya; and Morooka, Yasuo, 4,373,364, Cl. 72-8.000.

Hitachi Shipbuilding & Engineering Company Limited: *See—*

Kobayashi, Takanobu, 4,373,316, Cl. 53-67.000.

Hoback, John T.: *See—*

Holub, Fred F.; and Hoback, John T., 4,374,214, Cl. 523-466.000.

Hoch, Samuel: *See—*

Goodman, Donald; Ceprini, Mario Q.; Hoch, Samuel; and Koral, Marvin, 4,374,057, Cl. 252-426.000.

Hochschild, Richard. Method for making a pharmaceutical and/or nutritional dosage form. 4,374,082, Cl. 264-129.000.

Hockley, Bernard: *See—*

Pryor, Timothy R.; Hockley, Bernard; Liptay-Wagner, Nick; Hageniers, Omer L.; and Pastorius, W. J., 4,373,804, Cl. 356-1.000.

Hodgdon, Russell B.: *See—*

MacDonald, Russel J.; and Hodgdon, Russell B., 4,374,206, Cl. 521-38.000.

Hoechst Aktiengesellschaft: *See—*

Geuss, Reinhart, 4,374,281, Cl. 568-637.000.

Hoechst-Roussel Pharmaceuticals Inc.: *See—*

Davis, Larry; and Klein, Joseph T., 4,374,245, Cl. 546-20.000.

Effland, Richard C.; Davis, Larry; and Klein, Joseph T., 4,374,137, Cl. 424-258.000.

Lee, Thomas B. K.; and Lee, George E., 4,374,067, Cl. 260-456.00A.

Hoffman, Kenneth: *See—*

Zwick, Eugene B.; Nguyen, Dung D.; Brigham, William D.; and Hoffman, Kenneth, 4,373,896, Cl. 431-9.000.

Hoffman, Louis S. Container. 4,373,636, Cl. 206-551.000.

Hoffmann, Erich; and Ptaschek, Werner, to W. C. Heraeus GmbH. Apparatus for controlling the absorption of one or more color components in a dyeing fluid. 4,374,322, Cl. 250-226.000.

Hoffmann-La Rocche Inc.: *See—*

Horecker, Bernard L., 4,374,197, Cl. 435-68.000.

Hoffmann-La Roche Inc.: *See—*

Dotz, Karl H., 4,374,290, Cl. 585-16.000.

Mohacsi, Ernest, 4,374,139, Cl. 424-260.000.

Wick, Alexander E., 4,374,261, Cl. 560-51.000.

Hogan, John P.: *See—*

Stricklen, Phil M.; and Hogan, John P., 4,374,234, Cl. 526-105.000.

Hoggins, James T.: *See—*

Ruszala, Ferdinand A.; Hoggins, James T.; and Hupp, Stephen S., 4,374,109, Cl. 423-311.000.

Hohnen Oil Co., Ltd.: *See—*

Miyake, Kanichi; Tokuda, Masahiro; Aoki, Takaaki; Miyakawa, Hideaki; and Tamura, Yasuo, 4,374,217, Cl. 524-47.000.

Hokushin Elect. Works, Ltd.: *See—*

Sekiguchi, Toshio, 4,373,400, Cl. 73-861.120.

Holcroft & Company: *See—*

Jayaraman, Viswanath; and Cone, Carroll, 4,373,702, Cl. 266-111.000.

Holden, James R., to GTE Automatic Electric Labs Inc. Clock failure monitor circuit employing counter pair to indicate clock failure within two pulses. 4,374,361, Cl. 328-120.000.

Holenstein, Ernst; and Ramseier, Paul, to Bracker AG. Method and device for removing a ring traveller from the ring of a ring-spinning or ring-twisting frame. 4,373,247, Cl. 29-426.600.

Holesha, John, to Siemens Corporation. I-Use indication in a telephone keyset. 4,374,308, Cl. 179-99.0LS.

Holland, Larry D., to NEHA International. Method for recovering precious metals. 4,374,097, Cl. 423-22.000.

Hollandsche Beton Groep N.V.: *See—*

van der Pot, Barend J. G., 4,373,338, Cl. 60-641.700.

Hollingsworth, Calvin R. Valve for use with flexible dispensing tube. 4,373,647, Cl. 222-528.000.

Holman, William P. Center mask-perspective photography. 4,373,794, Cl. 354-122.000.

Holmen, Hans K., to A/S Tele-Plan. Movement compensation arrangement. 4,373,332, Cl. 60-426.000.

Holmes, David D., to RCA Corporation. Television ghost cancellation system with ghost carrier phase compensation. 4,374,400, Cl. 358-167.000.

Holmes, David G., to General Electric Company. Tuned sound barriers. 4,373,608, Cl. 181-202.000.
Holmes, James L., to GTE Products Corporation. Multi-lamp photoflash unit and fabricating process. 4,373,906, Cl. 431-359.000.
Holt, Harley R., to Bunker Ramo Corporation. Apparatus for assembling electrical cables to electrical connectors. 4,373,372, Cl. 72-406.000.
Holub, Fred F.; and Hoback, John T., to General Electric Company. Imide containing blends and polymeric compositions prepared therefrom. 4,374,214, Cl. 523-466.000.
Holubka, Joseph W.: *See—*
  Dickie, Ray A.; Holubka, Joseph W.; and Qaderi, S. Burhan A., 4,374,213, Cl. 523-416.000.
Homeier, Edwin H.: *See—*
  Imai, Tamotsu; and Homeier, Edwin H., 4,374,287, Cl. 568-909.000.
Honda Giken Kogyo Kabushiki Kaisha: *See—*
  Okubo, Kiyokazu, 4,373,407, Cl. 74-650.000.
  Onda, Takanori; Kawasaki, Hiroshi; and Misawa, Mitsukuni, 4,373,601, Cl. 180-226.000.
  Tomita, Takao; Yamamoto, Hitoshi; Enoki, Shigenaga; Goto, Isamu; and Hashimoto, Takeshi, 4,373,602, Cl. 180-227.000.
Honeywell Inc.: *See—*
  Bassett, William W.; and Rask, Dean R., 4,373,662, Cl. 236-10.000.
  Bohan, John E., Jr., 4,373,898, Cl. 431-73.000.
  Hammer, Jeffrey M., 4,373,663, Cl. 236-15.00R.
  Lin, Jacob W.; and Weinman, Leslie S., 4,374,179, Cl. 428-411.000.
  McClure, B. Thompson, 4,374,090, Cl. 422-98.000.
  Mueller, Dale A., 4,373,349, Cl. 62-156.000.
  Torborg, Ralph H., 4,373,897, Cl. 431-20.000.
  van Dyke, Martin J.; Colby, Dwight D.; and Dougherty, William R., 4,373,390, Cl. 73-304.00C.
Hoogovens IJmuiden B.V.: *See—*
  Olivierse, Jan; and van Es, Machiel A. H., 4,373,320, Cl. 53-589.000.
Hooker, Donald E.; and Tojza, Roman A., to Bally Manufacturing Corporation. Variable speed gaming device. 4,373,727, Cl. 273-143.00R.
Hopp Press, Inc., The: *See—*
  Greenberger, William, 4,373,693, Cl. 248-221.400.
Horecker, Bernard L., to Hoffmann-La Rocche Inc. Process for thymosin α_1. 4,374,197, Cl. 435-68.000.
Horey, Leonard I.: *See—*
  Dunn, William H.; Garron, Stephen A.; Horey, Leonard I.; and Wurst, John W., 4,373,459, Cl. 112-158.00E.
Horler, Hansulrich; and Meier, Erwin, to BBC Brown, Boveri & Company, Limited. Internal combustion engine having a turbo-supercharger with an automatic bypass. 4,373,336, Cl. 60-606.000.
Horner, Michael; and Teege, Gernot, to BASF Aktiengesellschaft. Chroman-6-ol derivatives useful for stabilizing plastics. 4,374,258, Cl. 549-407.000.
Hornkohl, Owen T.: *See—*
  Matlock, Gordon E.; and Hornkohl, Owen T., 4,373,652, Cl. 227-100.000.
Horodysky, Andrew G.: *See—*
  Gemmill, Robert M.; and Horodysky, Andrew G., 4,374,032, Cl. 252-49.600.
Horton, John D., to Sonoco Products Company. Method of making composite container with compressed body wall. 4,373,928, Cl. 493-103.000.
Houts, Ronald C.: *See—*
  Burlage, Donald W.; and Houts, Ronald C., 4,374,426, Cl. 364-724.000.
Howard, James L.: *See—*
  Prengaman, Raymond D.; and Howard, James L., 4,373,654, Cl. 228-173.00R.
Howard, Richard A.: *See—*
  Churchill, Richard W.; Hartman, Don W.; Howard, Richard A.; and Markowicz, Victor, 4,373,726, Cl. 273-138.00A.
Howell, John R.; and Peng, C. S. Patrick, to Board of Regents, University of Texas System. Hybrid double-absorption cooling system. 4,373,347, Cl. 62-112.000.
Howitt, Ronald W. Prefabricated building units. 4,373,304, Cl. 52-73.000.
Howorth, Jonathan R., to English Electric Valve Company Limited. Image intensifier arrangement with an in situ formed output filter. 4,374,325, Cl. 250-213.0VT.
Hozeski, Kenneth W.: *See—*
  Knoblauch, Jack R.; Beukema, Duane M.; and Hozeski, Kenneth W., 4,373,692, Cl. 248-162.100.
Hsu, Ed C.; Moore, L. Dow; and Temple, Chester S., to PPG Industries, Inc. Aqueous sizing composition for glass fibers and sized glass fibers for thermoplastic reinforcement. 4,374,177, Cl. 428-392.000.
Hsu, Feng H.: *See—*
  Cox, Gordon F. N.; and Hsu, Feng H., 4,373,836, Cl. 405-217.000.
Hubtex Maschinenbau GmbH: *See—*
  Schultheis, Hans-Werner, 4,373,854, Cl. 414-742.000.
Huckler, Volker D.: *See—*
  Benedek, Vasile; and Huckler, Volker D., 4,373,409, Cl. 74-745.000.
Hughes Aircraft Company: *See—*
  Lau, Kreisler S. Y., 4,374,291, Cl. 585-320.000.
  Wragg, Robert, 4,373,282, Cl. 40-546.000.
Hugnet, Roger P.: *See—*
  Camboulives, Andre A. M. L.; Debeneix, Pierre; Gendronneau, Claude V. L.; and Hugnet, Roger P., 4,373,421, Cl. 184-6.400.
Huijsing, Johan H.: *See—*
  Schuddemat, Jacob P.; and Huijsing, Johan H., 4,373,386, Cl. 73-189.000.
Hult, Tore M.: *See—*
  Lombardi, John P.; Hult, Tore M.; and Trowbridge, Robert H., Jr., 4,373,720, Cl. 273-29.00A.
Hummel-Newell, Robert: *See—*
  Ashford, David W.; and Hummel-Newell, Robert, 4,373,916, Cl. 434-22.000.
Hunt, William C., III, to Mobil Oil Corporation. Method of solvent flooding to recover viscous oils. 4,373,586, Cl. 166-263.000.
Hunter, Don L.; Woods, William G.; Stone, James D.; and LeFevre, Cecil W., to United States Borax & Chemical Corporation. Nitrophenylhydrazine compounds. 4,374,271, Cl. 564-310.000.
Hupp, Stephen S.: *See—*
  Ruszala, Ferdinand A.; Hoggins, James T.; and Hupp, Stephen S., 4,374,109, Cl. 423-311.000.
Hur, John Y., to AM International, Inc. Erasable intermediate diazotype paper. 4,374,190, Cl. 430-19.000.
Hurst, Ronald C.: *See—*
  Yates, Barrie J.; and Hurst, Ronald C., 4,374,113, Cl. 423-445.000.
Husson, Alan L.: *See—*
  Caputo, William R.; and Husson, Alan L., 4,373,612, Cl. 187-29.00R.
Hutchins, Erle M., to Western Electric Company, Incorporated. Tool for removing cover from electrical connector. 4,373,258, Cl. 29-764.000.
Hutchinson, George M.; and Burchette, Robert L., Jr., to LHP Corporation. Strand carrier. 4,373,685, Cl. 242-118.600.
Hutchinson, William J., to Eastman Kodak Company. Instant filmstrip with an elastic cover. 4,374,195, Cl. 430-499.000.
Hutt, Marland P.: *See—*
  Haskell, Theodore H.; and Hutt, Marland P., 4,374,138, Cl. 424-258.000.
Hutter & Schranz Bautechnik Gesellschaft m.b.H.: *See—*
  Artweger, Wolfgang, 4,373,311, Cl. 52-282.000.
Hyatt, James R. Stove with co-axial vent and flue design. 4,373,506, Cl. 126-67.000.
Hydril Company: *See—*
  Bollfrass, Charles A.; Landriault, Leonard S.; and McDonald, Patrick E., 4,373,754, Cl. 285-334.000.
Hymatic Engineering Company Limited, The: *See—*
  Adams, Norman H.; and Campbell, David N., 4,373,357, Cl. 62-514.0JT.
Ibrahim, Fayez; and Bowman, Edward, to Tyler Refrigeration Corporation. Energy saving refrigeration system. 4,373,348, Cl. 62-115.000.
Ichiko Industries Limited: *See—*
  Shimura, Kiichiro; Tamura, Takeo; Kido, Takayoshi; Hara, Hiroshi; and Tanaka, Morimasa, 4,374,348, Cl. 318-443.000.
ICI Australia Limited: *See—*
  McGarry, Errol J., 4,374,264, Cl. 560-205.000.
Iga, Atsushi: *See—*
  Oshima, Mitsuaki; Neichi, Yutaka; Iga, Atsushi; and Wada, Ryoichi, 4,374,403, Cl. 360-113.000.
Igoe, Robert S.; and Taylor, Richard J., to Merck & Co. Inc. Yogurt milk shake. 4,374,155, Cl. 426-569.000.
Iguchi, Mitsuya: *See—*
  Date, Takasaburo; Maki, Toshimichi; Iguchi, Mitsuya; Iwamaru, Sumifusa; and Watanabe, Hisashi, 4,373,911, Cl. 432-152.000.
Iinuma, Kazuhiro, to Tokyo Shibaura Denki Kabushiki Kaisha. Ultrasonic diagnosing apparatus. 4,373,533, Cl. 128-663.000.
Iio, Toshimasa; and Ohkubo, Toyokazu, to Sumitomo Metal Mining Co., Ltd. Method of concentrating silver from anode slime. 4,374,098, Cl. 423-27.000.
Ikeda, Nobumasa: *See—*
  Hirakawa, Hiroshi; Sato, Akio; Takusagawa, Takashi; and Ikeda, Nobumasa, 4,373,566, Cl. 152-353.00G.
Ikesue, Haruyuki, to NSK-Warner K.K. Method for coupling stranded cable assembly to fitting coupled arrangement obtained thereby. 4,373,830, Cl. 403-284.000.
Illinois Railway Equipment Company: *See—*
  Adler, Franklin P.; and Nadherny, Rudolph E., 4,373,841, Cl. 410-34.000.
Illinois Tool Works Inc.: *See—*
  Bettini, John E.; and Nelson, John F., 4,373,842, Cl. 411-377.000.
  Edwards, Bryant, 4,373,634, Cl. 206-520.000.
  Peterson, Francis C., 4,373,694, Cl. 248-246.000.
Imai, Hirosuke: *See—*
  Yuasa, Hitoshi; and Imai, Hirosuke, 4,374,243, Cl. 528-422.000.
Imai, Tamotsu; and Homeier, Edwin H., to UOP Inc. Synthesis of alcohols. 4,374,287, Cl. 568-909.000.
Imperial Chemical Industries Limited: *See—*
  Rothwell, Geoffrey R., 4,373,930, Cl. 8-527.000.
Imperial Group Limited: *See—*
  Tipper, Derrick W., 4,373,806, Cl. 356-23.000.
Inaba, Hajimu; and Miyashita, Hideo, to Fujitsu Fanuc Limited. Control system for an industrial robot. 4,374,349, Cl. 318-568.000.
Inagaki, Mitsuo: *See—*
  Tanaka, Taro; Sasaya, Hideaki; and Inagaki, Mitsuo, 4,373,880, Cl. 418-150.000.
Inai, Masayuki: *See—*
  Yoshizaki, Osamu; and Inai, Masayuki, 4,374,385, Cl. 346-1.100.
Inami, Nobuo; and Tanaka, Kojiro, to Kabushiki Kaisha Daini Seikosha. Cascade type CMOS semiconductor device. 4,374,332, Cl. 307-304.000.
Inamori, Kazuo; and Miyawaki, Kiyoshige, to Kyoto Ceramic Co., Ltd. Semiconductor integrated circuit supporter having a heating element. 4,374,316, Cl. 219-209.000.

Inamoto, Hiroshi; Sobajima, Katsunobu; and Miyoshi, Shoichi, to Nissan Motor Co., Ltd.; and Kato Hatsujo Kaisha, Ltd. Fastener assembly. 4,373,826, Cl. 403-14.000.
Inamoto, Yoshiaki: *See—*
  Fujikura, Yoshiaki; Inamoto, Yoshiaki; Takaishi, Naotake; and Nakajima, Motoki, 4,374,052, Cl. 252-522.00R.
Indy Electronics, Inc.: *See—*
  Schroeder, Jon M., 4,374,080, Cl. 264-102.000.
Ing. C. Olivetti & C. S.p.A.: *See—*
  Albrile, Walter, 4,373,823, Cl. 400-196.100.
Ingle, William M.: *See—*
  Darnell, Robert D.; and Ingle, William M., 4,374,110, Cl. 423-342.000.
Innacelli, Frank L. Tobacco smoke filter. 4,373,539, Cl. 131-209.000.
Innovative Computer Products Corp.: *See—*
  Davis, C. Paul, 4,374,404, Cl. 360-128.000.
Innovative Electronics, Inc.: *See—*
  Ponto, Robert; and Martin, Hardison G., 4,374,300, Cl. 179-1.0AT.
Institute of Gas Technology: *See—*
  Anderson, Gerald L.; Borders, Harley A.; and Aquino, Maria R., 4,374,105, Cl. 423-230.000.
Instrumentation Laboratory Inc.: *See—*
  Stein, Bernard; Keramaty, Hamid; and Brickus, Romas A., 4,373,812, Cl. 356-246.000.
Interaction Systems, Inc.: *See—*
  Ng, Henry H.; and Schmidt, Frederick R., 4,374,381, Cl. 340-711.000.
Interchem International S.A.: *See—*
  Rowlands, Jeffrey P., 4,374,209, Cl. 521-116.000.
International Business Machines Corporation: *See—*
  Adham, Jawad F., 4,373,778, Cl. 350-96.200.
  Barclay, Donald J.; and Vigar, James M. L., 4,374,007, Cl. 204-51.000.
  Bernier, William E., 4,374,001, Cl. 204-2.000.
  Bildstein, Carl R.; Heibein, Harry P.; and Mathews, Harlan P., 4,374,386, Cl. 346-75.000.
  Bradley, David J.; Gibbs, Dennis D.; Kostuch, Donald J.; and Martin, James S., 4,374,417, Cl. 364-200.000.
  Cannon, Jack W.; Herrman, Bradley D.; and Ramirez, Ramiro, Jr., 4,374,429, Cl. 364-900.000.
  Cormier, Roger L.; Dugan, Robert J.; Guyette, Richard R.; and Wansor, David H., 4,374,415, Cl. 364-200.000.
  Cunningham, Joseph E., Jr.; and Gianos, Philip T., 4,374,321, Cl. 219-497.000.
  Kim, Sang U., 4,373,966, Cl. 148-1.500.
  Polk, Darryl R.; and Williams, Errol R., Jr., 4,374,383, Cl. 340-870.370.
International Flavors & Fragrances Inc.: *See—*
  Boden, Richard M.; and Tyszkiewicz, Theodore J., 4,374,276, Cl. 568-398.000.
  Boden, Richard M.; and Geiger, John H., Jr., 4,374,277, Cl. 568-448.000.
  Klemarczyk, Philip T.; Belko, Robert P.; and Boden, Richard M., 4,374,053, Cl. 252-522.00R.
  Klemarczyk, Philip T.; Sanders, James M.; Vock, Manfred H.; Vinals, Joaquin F.; Schmitt, Frederick L.; and Granda, Edward J., 4,374,054, Cl. 252-522.00R.
  Luccarelli, Domenick, Jr.; and Yoshida, Takao, 4,374,123, Cl. 424-49.000.
  Schreck, Ronald P.; Light, Kenneth K.; Hall, John B.; Schmitt, Frederick L.; Vock, Manfred H.; Schreiber, William L.; Vinals, Joaquin F.; and Kiwala, Jacob, 4,374,055, Cl. 252-522.00R.
International Harvester Co.: *See—*
  Allori, Aldo; Koutsky, Ronald A.; and Wilger, John A., 4,374,375, Cl. 340-52.00A.
  Cellitti, Raymond A.; and Halgren, John A., 4,373,973, Cl. 148-12.400.
  Klem, John E., 4,373,739, Cl. 280-111.000.
  McMillen, Russell G., 4,373,577, Cl. 165-122.000.
  Shekleton, Jack R., 4,373,325, Cl. 60-39.060.
  Swanson, William C., 4,373,669, Cl. 239-124.000.
  Westerfield, Lawerence D., 4,373,456, Cl. 111-88.000.
International Shoe Machine Corporation: *See—*
  Becka, Michael M., 4,373,467, Cl. 118-211.000.
International Standard Electric Corporation: *See—*
  Fricke, Hans; Kiess, Jurgen; and Schulmeyer, Lutz, 4,373,691, Cl. 246-34.0CT.
International Telephone and Telegraph Corporation: *See—*
  Borsuk, Leslie M.; and Corrales, Patrick G., 4,373,777, Cl. 350-96.200.
  Gasparian, George A., 4,373,775, Cl. 350-96.150.
  Severeid, David E.; and Jech, Daryl D., 4,374,027, Cl. 210-608.000.
Intertechnique: *See—*
  Boutteville, Raymond; and Febvret, Thierry, 4,373,385, Cl. 73-146.500.
Ionics Incorporated: *See—*
  MacDonald, Russel J.; and Hodgdon, Russell B., 4,374,206, Cl. 521-38.000.
Iordan, Georgy G.: *See—*
  Beloglazov, Alexei V.; Beiden, Vladimir E.; Iordan, Georgy G.; Karneev, Vladimir M.; Papkov, Vladimir S.; Stuchebnikov, Vladimir M.; Khasikov, Viktor V.; and Surovikov, Mikhail V., 4,373,399, Cl. 73-777.000.
IREQ—Institut de Recherche de l'Hydro-Quebec: *See—*
  Missout, Gilles, 4,374,359, Cl. 324-96.000.
Isenberg, Arnold O., to Westinghouse Electric Corp. Method of vapor deposition. 4,374,163, Cl. 427-253.000.
Isenberg, Arnold O.: *See—*
  Somers, Edward V.; and Isenberg, Arnold O., 4,374,184, Cl. 429-17.000.
Ishihara, Toshio: *See—*
  Taira, Tadaaki; Ishihara, Toshio; and Takehara, Junichiro, 4,373,365, Cl. 72-52.000.
Ishii, Mitsuo: *See—*
  Sawatani, Tadashi; Ishii, Mitsuo; and Yoshimura, Hirofumi, 4,373,971, Cl. 148-12.0EA.
Ishii, Toshiaki, to Mitsubishi Denki Kabushiki Kaisha. Speed control apparatus for elevator. 4,373,610, Cl. 187-29.00R.
Ishikawajima-Harima Jukogyo Kabushiki Kaisha: *See—*
  Tachimoto, Kazuo; and Tanoue, Toyosuke, 4,373,883, Cl. 425-8.000.
Ishioka, Yoshimichi: *See—*
  Morishita, Teru; Ishioka, Yoshimichi; and Suzuki, Toshikazu, 4,373,672, Cl. 239-703.000.
Itatani, Hiroshi; Tone, Masatsugu; and Kurohara, Kazuaki, to Kubota, Ltd. Tractor for agriculture. 4,373,597, Cl. 180-70.0MS.
Ito, Haruo: *See—*
  Kajikawa, Shuji; Kanai, Kazuo; and Ito, Haruo, 4,373,907, Cl. 432-83.000.
Ito, Shoji; and Akagi, Motonobu, to Aisin Seiki Kabushiki Kaisha. Electromagnetic flow control valve assembly. 4,373,552, Cl. 137-625.480.
Ito, Toshihiko: *See—*
  Yamamoto, Shinichi; and Ito, Toshihiko, 4,373,895, Cl. 425-461.000.
Itoh, Fukusaburo, to Sharp Kabushiki Kaisha. Fixing temperature selecting control in a copying machine. 4,373,801, Cl. 355-14.0FU.
Itoh Metal Abrasive Co., Ltd.: *See—*
  Ueda, Setsuo; Yasuda, Takashi; Yamada, Tokuyoshi; and Kobayashi, Shigeki, 4,374,074, Cl. 264-8.000.
Iwamaru, Sumifusa: *See—*
  Date, Takasaburo; Maki, Toshimichi; Iguchi, Mitsuya; Iwamaru, Sumifusa; and Watanabe, Hisashi, 4,373,911, Cl. 432-152.000.
Iwao, Kumiy R.; and Lovie, James V., to Varian Associates, Inc. Chromatographic accessory incorporating injection switch assembly. 4,374,089, Cl. 422-70.000.
Iwata Air Compressor Manufacturing Company Ltd.: *See—*
  Matsushita, Yoshio, 4,373,881, Cl. 418-195.000.
Iyengar, Doreswamy R., to BASF Wyandotte Corporation. Surface treated alkali blue pigment. 4,373,962, Cl. 106-288.00Q.
Iyoda, Tetsuo; and Kikuchi, Masatsugu, to Fuji Xerox Co., Ltd. Deflecting device in ink jet printer. 4,374,387, Cl. 346-75.000.
J. I. Case Company: *See—*
  Maurer, Herman J., 4,373,852, Cl. 414-723.000.
  Nelson, Carl D., 4,373,603, Cl. 180-236.000.
Jackson, Auzville, Jr.: *See—*
  Barker, Charles E.; Cairo, Anthony C.; Bauer, Frederick T.; and Jackson, Auzville, Jr., 4,373,664, Cl. 236-46.00R.
Jackson, Priscilla H. Educational device for teaching arithmetical operations. 4,373,917, Cl. 434-209.000.
Jackson, Robert R.: *See—*
  Purdy, Geoffrey H.; and Jackson, Robert R., 4,373,756, Cl. 297-153.000.
Jacobs, Cornelis A. J.: *See—*
  Tielemans, Peter A. W.; and Jacobs, Cornelis A. J., 4,374,339, Cl. 313-218.000.
Jaisinghani, Rajan A., to Nelson Industries, Inc. Regenerative filter. 4,374,029, Cl. 210-671.000.
Jakobsen, Kjell M.; and Nilsson, Claes T., to PLM Aktiebolag. Amorphous, drawn, cup-like thermoplastic PET element of 10–25% crystallinity and monoaxial orientation in side wall. 4,374,166, Cl. 428-35.000.
James C. Barber and Associates, Inc.: *See—*
  Barber, James C., 4,373,893, Cl. 425-222.000.
James L. Taylor Mfg. Co.: *See—*
  Mortoly, John L., 4,374,165, Cl. 427-430.100.
Jamestown Group: *See—*
  Schwartz, Larry A.; Geiter, Robert; and Albertsen, Peter S., 4,373,507, Cl. 126-289.000.
Janome Sewing Machine Co. Ltd.: *See—*
  Sano, Yasuro, 4,373,461, Cl. 112-274.000.
Janos, Alfred G., to Maysteel Corporation. Guide apparatus for flexible elements connected to relatively moving units. 4,373,324, Cl. 59-78.100.
Jansen, Johann J.: *See—*
  Bomers, Joseph J. P.; Ellis, David G.; Jansen, Johann J.; and Bijen, Jan M. J. M., 4,373,981, Cl. 156-164.000.
Japan Exlan Co., Ltd.: *See—*
  Tanaka, Koji, 4,374,175, Cl. 428-369.000.
Jarcho, Michael, to Sterling Drug Inc. Dental plaque-preventive oxazolidine containing compositions and method. 4,374,124, Cl. 424-54.000.
Jayaraman, Viswanath; and Cone, Carroll, to Holcroft & Company. Jet impingement/radiant heating apparatus. 4,373,702, Cl. 266-111.000.
Jech, Daryl D.: *See—*
  Severeid, David E.; and Jech, Daryl D., 4,374,027, Cl. 210-608.000.
Jenkins, Theron W., Jr.: *See—*
  Fishman, Walter; and Jenkins, Theron W., Jr., 4,374,351, Cl. 318-600.000.

Jenni, Herbert: *See—*
Grundler, Robert; Fuchs, Josef; and Jenni, Herbert, 4,373,557, Cl. 139-142.000.
Jensen, Wayne D.: *See—*
Kao, James T. F.; and Jensen, Wayne D., 4,374,254, Cl. 548-527.000.
Jernqvist, Ake; and Bolmstedt, Ulf, to Alfa-Laval AB. Plate heat exchanger. 4,373,579, Cl. 165-167.000.
Jezbera, Val K. Hammer bank assembly. 4,373,440, Cl. 101-93.340.
Jha, Mahesh C.: *See—*
Lussiez, Guy W.; and Jha, Mahesh C., 4,374,101, Cl. 423-150.000.
Jimmy Connors Rally Champion Enterprise: *See—*
Lombardi, John P.; Hult, Tore M.; and Trowbridge, Robert H., Jr., 4,373,720, Cl. 273-29.00A.
John Zink Company: *See—*
Reed, Robert D.; and Schwartz, Robert E., 4,373,902, Cl. 431-202.000.
Johns Hopkins University, The: *See—*
Fischell, Robert E., 4,373,527, Cl. 128-260.000.
Johnson, Leopold J.: *See—*
McCartney, Joseph F.; Jones, Thomas E.; and Johnson, Leopold J., 4,374,186, Cl. 429-154.000.
Johnson, Melvin C., to American Cyanamid Company. Compositions containing anorexigenic compounds and methods for regulating the feed intake of homothermic animals. 4,374,135, Cl. 424-251.000.
Johnson, Peter D., to General Electric Company. Relative humidity sensitive material. 4,373,391, Cl. 73-335.000.
Johnson, Raymond A.: *See—*
Campbell, Stephen W.; Cragg, Eric E.; Elwell, Michael J.; and Johnson, Raymond A., 4,374,188, Cl. 429-187.000.
Johnson, Robert A., to Rockwell International Corporation. Mechanical filter with acoustic sensing. 4,373,396, Cl. 73-651.000.
Johnsson, Bo A.: *See—*
Stenberg, Kaj O.; Traven, Lars J. C.; Losell, Ingvar F.; and Johnsson, Bo A., 4,374,088, Cl. 422-46.000.
Johnston, James J., to Connector Technology Corporation. Electrical connector assembly. 4,373,766, Cl. 339-91.00R.
Jones, Dennis A.; and Boggs, Bruce E., to JTM Industries, Inc. Road base stabilization using lime kiln dust. 4,373,958, Cl. 106-118.000.
Jones, Ira D. Scope for viewing the internal surface of a bore or similar cavity. 4,373,811, Cl. 356-241.000.
Jones, Robert A., to United Technologies Corporation. Thrust reverser. 4,373,328, Cl. 60-226.200.
Jones, Terry V.: *See—*
Bednar, John M.; Postler, Daniel P.; and Jones, Terry V., 4,373,582, Cl. 166-65.00R.
Jones, Thomas B.; Morgan, Morris H.; and Dietz, Peter W., to General Electric Company. System for controlling spouted bed inlet conditions. 4,373,272, Cl. 34-57.00A.
Jones, Thomas E.: *See—*
McCartney, Joseph F.; Jones, Thomas E.; and Johnson, Leopold J., 4,374,186, Cl. 429-154.000.
Jones, Thomas F., to Tobacco Machinery Co. of Ky. Inc. Tobacco leaf stripper. 4,373,323, Cl. 56-27.500.
Joseph, Horst G.: *See—*
Flockenhaus, Claus; Galow, Manfred; Meckel, Joachim F.; and Joseph, Horst G., 4,373,997, Cl. 202-230.000.
JTM Industries, Inc.: *See—*
Jones, Dennis A.; and Boggs, Bruce E., 4,373,958, Cl. 106-118.000.
Jung, Michel: *See—*
Bey, Philippe; Jung, Michel; Kolb, Michael; and Danzin, Charles, 4,374,128, Cl. 424-180.000.
Jurgens, Rainer: *See—*
Phaal, Cornelius; and Jurgens, Rainer, 4,373,593, Cl. 175-329.000.
Kabushiki Kaisha Daini Seikosha: *See—*
Inami, Nobuo; and Tanaka, Kojiro, 4,374,332, Cl. 307-304.000.
Kabushiki Kaisha Kawai Gakki Seisakusho: *See—*
Kondo, Nobuaki, 4,373,415, Cl. 84-1.010.
Kabushiki Kaisha Kyoto Daiichi Kagaku: *See—*
Yamamoto, Hiroshi; and Furutani, Yoshikazu, 4,373,818, Cl. 356-408.000.
Kabushiki Kaisha Meidensha: *See—*
Yoshioka, Nobuyuki; Suzuki, Tsutai; Haba, Masanori; and Koyama, Hideo, 4,374,160, Cl. 427-101.000.
Kabushiki Kaisha Shikishima Tipton: *See—*
Kobayashi, Hisamine, 4,373,296, Cl. 51-3.000.
Kabushiki Kaisha Suwa Seikosha: *See—*
Arai, Kenichiro, 4,373,438, Cl. 101-93.040.
Kabushki Kaisha Suwa Seikosha: *See—*
Mikoshiba, Hitoshi, 4,373,439, Cl. 101-93.090.
Kaiser, William L.; and Brown, Gale R., to Zimmer, Inc. Method of drilling living bone. 4,373,518, Cl. 128-92.0EB.
Kajikawa, Shuji; Kanai, Kazuo; and Ito, Haruo, to Nippon Kokan Kabushiki Kaisha. Apparatus for manufacturing rapidly cooled solidified slag. 4,373,907, Cl. 432-83.000.
Kajimaki, Masao: *See—*
Bandai, Shinji; Kajimaki, Masao; Nakajima, Yoshihiro; Yagi, Akira; and Nishimura, Haruo, 4,373,224, Cl. 15-1.50A.
Kakizaki, Katsumi; and Kozuka, Michihiro, to Tomy Kogyo Co., Inc. Toy racing game. 4,373,293, Cl. 46-206.000.
Kamahara, Koichi, to Mitsubishi Denki Kabushiki Kaisha. Light triggered thyristor device. 4,374,393, Cl. 357-30.000.
Kamei, Shigeki; Fushio, Masamori; and Hirai, Atuo, to Hitachi Kiden Kogyo, Ltd. Method and apparatus for dewatering screenings. 4,373,433, Cl. 100-37.000.
Kamiyama, Shin-ichi; Ohshima, Kiyoshi; Mochizuki, Manabu; Kato, Kazuyuki; and Saito, Takeshi, to Ricoh Company, Ltd. Wet type electrophotographic copying machine. 4,373,800, Cl. 355-10.000.
Kanai, Kazuo: *See—*
Kajikawa, Shuji; Kanai, Kazuo; and Ito, Haruo, 4,373,907, Cl. 432-83.000.
Kanakaris, Georges, to Santrade Ltd. Expansible mandrel. 4,373,411, Cl. 82-44.000.
Kanbe, Junichiro: *See—*
Suda, Masashi; and Kanbe, Junichiro, 4,373,468, Cl. 118-658.000.
Kane, James: *See—*
Connelly, Lawrence J.; Kane, James; and Shields, R. James, 4,374,102, Cl. 423-206.00T.
Kanebo, Ltd.: *See—*
Aoki, Kiyoshi; and Ohara, Saburo, 4,374,176, Cl. 428-392.000.
Kanebo Synthetic Fibers Ltd.: *See—*
Aoki, Kiyoshi; and Ohara, Saburo, 4,374,176, Cl. 428-392.000.
Kanesaka, Michiru: *See—*
Yuge, Shizuo; Kitou, Nobuo; Yamamoto, Toshio; and Kanesaka, Michiru, 4,373,802, Cl. 355-14.0FU.
Kao Corporation: *See—*
Fujikura, Yoshiaki; Inamoto, Yoshiaki; Takaishi, Naotake; and Nakajima, Motoki, 4,374,052, Cl. 252-522.00R.
Kao, James T. F.; and Jensen, Wayne D., to Ethyl Corporation. Process for producing substituted pyrroles. 4,374,254, Cl. 548-527.000.
Kao, James T. F.; and Farritor, Robert E., to Ethyl Corporation. Process for producing substituted pyrroles. 4,374,255, Cl. 548-531.000.
Kao, James T. F.; and Wiegand, Karl E., to Ethyl Corporation. Process for the preparation of pyrryl-2-acetonitrile. 4,374,256, Cl. 548-561.000.
Kao Soap Co., Ltd.: *See—*
Watanabe, Hiroshi; and Hirota, Hajime, 4,374,056, Cl. 252-546.000.
Kaplan, Robert A.; Reicke, Mark A.; and Wellman, James E., to Scott & Fetzer Company, The. Adjustable flame spreader for gun-type power gas burner. 4,373,901, Cl. 431-186.000.
Karl Lautenschlager KG, Mobelbeschlagfabrik: *See—*
Lautenschlager, Karl, 4,373,230, Cl. 16-288.000.
Karneev, Vladimir M.: *See—*
Beloglazov, Alexei V.; Beiden, Vladimir E.; Iordan, Georgy G.; Karneev, Vladimir M.; Papkov, Vladimir S.; Stuchebnikov, Vladimir M.; Khasikov, Viktor V.; and Surovikov, Mikhail V., 4,373,399, Cl. 73-777.000.
Kartisek, C. T.: *See—*
Burrington, J. D.; Grasselli, R. K.; and Kartisek, C. T., 4,374,293, Cl. 585-410.000.
Kasper, Alan H.: *See—*
Mathe, Istvan; and Kasper, Alan H., 4,373,769, Cl. 339-97.00R.
Kasper, Thomas J.: *See—*
Graboyes, Harold; Kasper, Thomas J.; and Vaidya, Praful D., 4,374,252, Cl. 548-343.000.
Katayama, Aisuke. Divisor transform type high-speed electronic division system. 4,374,427, Cl. 364-761.000.
Kato Hatsujo Kaisha, Ltd.: *See—*
Inamoto, Hiroshi; Sobajima, Katsunobu; and Miyoshi, Shoichi, 4,373,826, Cl. 403-14.000.
Kato, Hirokazu: *See—*
Endo, Akinori; and Kato, Hirokazu, 4,373,416, Cl. 84-1.010.
Kato, Kazuyuki: *See—*
Kamiyama, Shin-ichi; Ohshima, Kiyoshi; Mochizuki, Manabu; Kato, Kazuyuki; and Saito, Takeshi, 4,373,800, Cl. 355-10.000.
Kato, Shinichi; Tsuda, Hiroshi; Yamaki, Kiyoshi; Suzuki, Tadashi; and Kuwano, Fumiyoshi, to Nissan Motor Company, Limited. Switch arrangement on motor vehicle steering wheels. 4,374,310, Cl. 200-61.540.
Kaufman, Glenn A.: *See—*
Olson, Gene E.; Thompson, Jerome A.; Grover, Donald D.; Stout, Christopher B.; Becker, Thomas P.; and Kaufman, Glenn A., 4,373,384, Cl. 73-119.00A.
Kaufman, Sydney M., to Ford Motor Company. Method for beneficiating ductile scrap metal. 4,373,675, Cl. 241-23.000.
Kaufmann, Richard O., to Thermal Engineering of Arizona, Inc. Commercial laundry heat recovery system. 4,373,572, Cl. 165-1.000.
Kawakubo, Takamasa; and Hirasawa, Kiyosi, to Mitsubishi Pencil Co., Ltd. Method of fabricating an eraser. 4,374,225, Cl. 524-302.000.
Kawamoto, Hiromi: *See—*
Nakaso, Yasuji; Tanaka, Kyoji; and Kawamoto, Hiromi, 4,374,108, Cl. 423-301.000.
Kawano, Yoshihiko; Adachi, Hirosi; Watanuki, Masakazu; and Ueno, Takashi, to Kobukura Iron Works Co., Ltd. Impact type crusher. 4,373,679, Cl. 241-275.000.
Kawasaki, Hiroshi: *See—*
Onda, Takanori; Kawasaki, Hiroshi; and Misawa, Mitsukuni, 4,373,601, Cl. 180-226.000.
Kawasaki Steel Corporation: *See—*
Yamada, Hirosuke, 4,373,705, Cl. 266-227.000.
Kazami, Kazuyuki: *See—*
Nozawa, Hideyo; Naito, Hideshi; and Kazami, Kazuyuki, 4,373,792, Cl. 354-33.000.
Keane, Stuart: *See—*
Brown, George E. R.; Helm, Arthur E.; and Keane, Stuart, 4,373,723, Cl. 273-86.00B.
Kearney-National, Inc.: *See—*
Narancic, Vojislav, 4,374,371, Cl. 337-159.000.
Keil, O'Dell M.: *See—*
Doliber, Darrel L.; and Keil, O'Dell M., 4,373,269, Cl. 33-246.000.

Keller, Hans W. Piezoresistive pressure cell. 4,373,397, Cl. 73-721.000.
Keller, Herbert. Peak load device of a multistage turbine. 4,373,340, Cl. 60-677.000.
Kelly, John, Jr.: *See—*
Dellinger, Thomas B.; and Kelly, John, Jr., 4,373,592, Cl. 175-61.000.
Kemmner, Ulrich; Ringwald, Peter; Mutschele, Hans-Ulrich; and Schillinger, Rainer, to Robert Bosch GmbH. Noise damping device. 4,373,872, Cl. 417-312.000.
Kendall Company, The: *See—*
Wichman, Cynthia A., 4,373,214, Cl. 2-51.000.
Kennedy, John M.; and Kennedy, William R. Door for a mine stopping having knife-edge hinges. 4,373,294, Cl. 49-388.000.
Kennedy Van Saun Corporation: *See—*
Gardner, Kenneth L.; Gootzait, Edward; Maciejewski, Edward T.; and Fisher, Donald L., 4,373,451, Cl. 110-101.0CC.
Kennedy, William R.: *See—*
Kennedy, John M.; and Kennedy, William R., 4,373,294, Cl. 49-388.000.
Kenner, Bernard A.; and Conaway, John R., to Electronic Memories and Magnetics Corporation. Read systems for 2½D coincident current magnetic core memory. 4,374,432, Cl. 365-209.000.
Kenney, Martin J.: *See—*
Schritt, Renaldo F.; and Kenney, Martin J., 4,373,619, Cl. 192-0.090.
Kenyon, Alan. Sawing of lumber from logs. 4,373,563, Cl. 144-357.000.
Keramaty, Hamid: *See—*
Stein, Bernard; Keramaty, Hamid; and Brickus, Romas A., 4,373,812, Cl. 356-246.000.
Kerfeld, Donald J., to Minnesota Mining and Manufacturing Company. Process for making information carrying discs. 4,374,077, Cl. 264-22.000.
Kerr-McGee Corporation: *See—*
Brule, Michael R., 4,374,015, Cl. 208-8.0LE.
Kewanee Industries, Inc.: *See—*
Green, Harold A.; Merianos, John J.; and Petrocci, Alfonso N., 4,374,244, Cl. 542-476.000.
Khadder, Wadie N.; Wang, Jia-Tarng; and Solomon, James E., to National Semiconductor Corporation. Integrated CMOS process with JFET. 4,373,253, Cl. 29-576.00B.
Khasikov, Viktor V.: *See—*
Beloglazov, Alexei V.; Beiden, Vladimir E.; Iordan, Georgy G.; Karneev, Vladimir M.; Papkov, Vladimir S.; Stuchebnikov, Vladimir M.; Khasikov, Viktor V.; and Surovikov, Mikhail V., 4,373,399, Cl. 73-777.000.
Khomyakov, Anatoly V.: *See—*
Gorelik, Rudolf A.; Dukhovskoi, Evgeny A.; Kleiman, Alexandr M.; Kleimenov, Nikolai A.; Markevich, Andrei M.; Ponomarev, Ardalion N.; Silin, Askold A.; Skok, Valentina M.; Talroze, Viktor L.; Khomyakov, Anatoly V.; and Lyapunov, Andrei Y., 4,374,180, Cl. 428-421.000.
Kido, Takayoshi: *See—*
Shimura, Kiichiro; Tamura, Takeo; Kido, Takayoshi; Hara, Hiroshi; and Tanaka, Morimasa, 4,374,348, Cl. 318-443.000.
Kiess, Jurgen: *See—*
Fricke, Hans; Kiess, Jurgen; and Schulmeyer, Lutz, 4,373,691, Cl. 246-34.0CT.
Kikuchi, Masatsugu: *See—*
Iyoda, Tetsuo; and Kikuchi, Masatsugu, 4,374,387, Cl. 346-75.000.
Kikuchi, Yasuo: *See—*
Mukoh, Akio; Morishita, Hirosada; Anzai, Masayasu; Tokunaga, Kazuyoshi; and Kikuchi, Yasuo, 4,374,191, Cl. 430-100.000.
Kilcy, James J. Method and apparatus for producing 360 degree radiation with static components. 4,374,365, Cl. 372-92.000.
Kilejian, Lisa Ann: *See—*
Kilejian, Vahe, 4,373,530, Cl. 128-334.00R.
Kilejian, Vahe, to Kilejian, Lisa Ann. Surgical stitching instrument. 4,373,530, Cl. 128-334.00R.
Kilian, Alois, to Dravo Corporation. Process of heat-treating pellets. 4,373,946, Cl. 75-5.000.
Kilner, David N., to Prismo Universal Limited. Apparatus for applying road marking materials to roadways. 4,373,670, Cl. 239-172.000.
Kilwin, Thomas C., to UMC Industries Inc. Torque limiting overload coupling. 4,373,923, Cl. 464-36.000.
Kim, Chang-Kyu; and Maggiulli, Cataldo A., to Eastman Kodak Company. Method for preparing 1-aryl-3-arylamino-2-pyrazolin-5-ones from N-aryl-3-arylamino-3-oximinopropionamides. 4,374,253, Cl. 548-360.000.
Kim, Kwon S., to Star Manufacturing Co. Prefabricated panel construction system. 4,373,312, Cl. 52-309.900.
Kim, Oh-Kil; and Fox, Robert B., to United States of America, Navy. Electrically conductive polymeric compositions. 4,374,048, Cl. 252-500.000.
Kim, Sang N.; McMahon, Paul E.; Riggs, John P.; and Rhodes, John M., to Celanese Corporation. Process for the surface modification of carbon fibers. 4,374,114, Cl. 423-447.100.
Kim, Sang U., to International Business Machines Corporation. Forming Schottky barrier diodes by depositing aluminum silicon and copper or binary alloys thereof and alloy-sintering. 4,373,966, Cl. 148-1.500.
Kim, Tai K.; MacInnis, Martin B.; McClintic, Robert P.; and Vogt, Martin C., to GTE Products Corporation. Recovery of tungsten values from alkali tungstate solutions by solvent extraction. 4,374,099, Cl. 423-54.000.
Kimata, Kei; and Nakazeki, Tsugito, to NTN Toyo Bearing Company, Limited. Fuel injection apparatus. 4,373,490, Cl. 123-452.000.
Kimberly-Clark Corporation: *See—*
Lilaonitkul, Amnuey; and Tews, Richard R., 4,373,529, Cl. 128-285.000.
Kimoto & Co., Ltd.: *See—*
Moriya, Takeo; and Yamagata, Toshio, 4,374,193, Cl. 430-149.000.
Kimura, Hiroyuki; and Yamada, Tateo, to Canon Kabushiki Kaisha. Film rewinding device for camera. 4,373,795, Cl. 354-173.000.
Kimzey, Paul W.; and Frederick, Sherman B., to Tennant Company. Surface maintenance equipment. 4,373,227, Cl. 15-347.000.
Kincaid, John, to Belden Corporation. Triboelectric transducer cable. 4,374,299, Cl. 174-36.000.
Kipp, Robert M.: *See—*
Ayers, Ray R.; and Kipp, Robert M., 4,373,753, Cl. 285-319.000.
Kirisawa, Tadashi: *See—*
Nishimura, Yutaka; Kuroiwa, Hiroshi; Kirisawa, Tadashi; and Oyama, Yoshishige, 4,373,387, Cl. 73-204.000.
Kirk, J. David, to Outboard Marine Corporation. Internal combustion engine. 4,373,475, Cl. 123-59.00B.
Kirwan, Patrick N.: *See—*
Dorosz, Adolph S.; Kirwan, Patrick N.; and Szydlek, Nicholas P., 4,373,458, Cl. 112-121.120.
Kishi, Mitsuhiro. Lifting apparatus. 4,373,701, Cl. 254-122.000.
Kishida, Nobuhiro; Shishido, Kunihiro; and Haryu, Satoshi, to Toyo Seikan Kaisha, Ltd. Apparatus for cooling a transfer mandrel. 4,373,891, Cl. 425-174.400.
Kita, Toru: *See—*
Fujishiro, Takeshi; Takeuchi, Kiyoshi; and Kita, Toru, 4,373,378, Cl. 73-35.000.
Kitagawa, Junji: *See—*
Kitamura, Sotoo; Akita, Sigeyuki; and Kitagawa, Junji, 4,373,388, Cl. 73-301.000.
Kitamura, Shigeki: *See—*
Misono, Masayoshi; and Kitamura, Shigeki, 4,374,344, Cl. 313-479.000.
Kitamura, Sotoo; Akita, Sigeyuki; and Kitagawa, Junji, to Nippon Soken, Inc. Liquid level monitoring device. 4,373,388, Cl. 73-301.000.
Kite, Kenneth M.; Eberts, Allen F.; and Cocovich, Joseph A., to CPG Products Corp. Electronic vehicle race simulator. 4,373,722, Cl. 273-85.00G.
Kitou, Nobuo: *See—*
Yuge, Shizuo; Kitou, Nobuo; Yamamoto, Toshio; and Kanesaka, Michiru, 4,373,802, Cl. 355-14.0FU.
Kitsch, Edward A.: *See—*
Krause, James A.; and Kitsch, Edward A., 4,373,937, Cl. 55-118.000.
Kiwala, Jacob: *See—*
Schreck, Ronald P.; Light, Kenneth K.; Hall, John B.; Schmitt, Frederick L.; Vock, Manfred H.; Schreiber, William L.; Vinals, Joaquin F.; and Kiwala, Jacob, 4,374,055, Cl. 252-522.00R.
Klaus, Gerald R.; and Williams, Thomas E., to Fellowes Manufacturing. Literature shelving. 4,373,449, Cl. 108-60.000.
Klawitter, Jerome J., to Hemex, Inc. Heart valves having edge-guided occluders. 4,373,216, Cl. 3-1.500.
Kleemann, Axel; Martens, Jurgen; and Samson, Marc, to Degussa Aktiengesellschaft. Process for the production of peptides. 4,374,062, Cl. 260-112.50R.
Kleiman, Alexandr M.: *See—*
Gorelik, Rudolf A.; Dukhovskoi, Evgeny A.; Kleiman, Alexandr M.; Kleimenov, Nikolai A.; Markevich, Andrei M.; Ponomarev, Ardalion N.; Silin, Askold A.; Skok, Valentina M.; Talroze, Viktor L.; Khomyakov, Anatoly V.; and Lyapunov, Andrei Y., 4,374,180, Cl. 428-421.000.
Kleimenov, Nikolai A.: *See—*
Gorelik, Rudolf A.; Dukhovskoi, Evgeny A.; Kleiman, Alexandr M.; Kleimenov, Nikolai A.; Markevich, Andrei M.; Ponomarev, Ardalion N.; Silin, Askold A.; Skok, Valentina M.; Talroze, Viktor L.; Khomyakov, Anatoly V.; and Lyapunov, Andrei Y., 4,374,180, Cl. 428-421.000.
Klein, Joseph T.: *See—*
Davis, Larry; and Klein, Joseph T., 4,374,245, Cl. 546-20.000.
Effland, Richard C.; Davis, Larry; and Klein, Joseph T., 4,374,137, Cl. 424-258.000.
Klem, John E., to International Harvester Co. Axle bolster pivot assembly. 4,373,739, Cl. 280-111.000.
Klemarczyk, Philip T.; Belko, Robert P.; and Boden, Richard M., to International Flavors & Fragrances Inc. Unsaturated aldehydes, organoleptic uses thereof and process for preparing same. 4,374,053, Cl. 252-522.00R.
Klemarczyk, Philip T.; Sanders, James M.; Vock, Manfred H.; Vinals, Joaquin F.; Schmitt, Frederick L.; and Granda, Edward J., to International Flavors & Fragrances Inc. Use in perfumery of carboalkoxy alkyl norbornanes. 4,374,054, Cl. 252-522.00R.
Kline, Christopher R.: *See—*
Haagen, Peter H.; and Kline, Christopher R., 4,374,307, Cl. 179-84.00T.
Kling, Lothar. Device for injection syringe. 4,373,526, Cl. 128-215.000.
Klosek, John M.; and Wu, Margaret M., to Mobil Oil Corporation. Selective oxidation of ethyl toluene or methyl styrene isomer mixtures to enrich meta-isomer content. 4,374,297, Cl. 585-868.000.
Kluger, Edward W.; and Rolen, Jack L., to Milliken Research Corporation. Process for hydroxyalkylation of cyanoethylanilines. 4,374,068, Cl. 260-465.00D.
Knapp, Heinrich, to Robert Bosch GmbH. Fuel supply system. 4,373,491, Cl. 123-472.000.
Knappe, Herman E., to Cherry-Burrell Corporation. Double block and vent valve. 4,373,545, Cl. 137-240.000.

Knifton, John F.: *See—*
Lin, Jiang-Jen; and Knifton, John F., 4,374,285, Cl. 568-902.000.
Knoblauch, Jack R.; Beukema, Duane M.; and Hozeski, Kenneth W., to Steelcase Inc. Chair control with height adjustment actuator. 4,373,692, Cl. 248-162.100.
Kobayashi, Hisamine, to Kabushiki Kaisha Shikishima Tipton. Deburring apparatus for workpieces. 4,373,296, Cl. 51-3.000.
Kobayashi, Shigeki: *See—*
Ueda, Setsuo; Yasuda, Takashi; Yamada, Tokuyoshi; and Kobayashi, Shigeki, 4,374,074, Cl. 264-8.000.
Kobayashi, Susumu, to Terumo Corporation. Method and apparatus for detecting occlusion in fluid-infusion tube of peristaltic type fluid-infusion pump. 4,373,525, Cl. 128-214.00E.
Kobayashi, Takanobu, to Hitachi Shipbuilding & Engineering Company Limited. Plug driving apparatus. 4,373,316, Cl. 53-67.000.
Koberstein, Edgar: *See—*
Bozon, Alfred; Lakatos, Eduard; Koberstein, Edgar; Pletka, Hans-Dieter; and Volker, Herbert, 4,374,047, Cl. 252-472.000.
Kobler, Ingo, to M.A.N.-ROLAND Druckmaschinen Aktiengesellschaft. Doctor blade construction for printing machine. 4,373,445, Cl. 101-365.000.
Kobukura Iron Works Co., Ltd.: *See—*
Kawano, Yoshihiko; Adachi, Hirosi; Watanuki, Masakazu; and Ueno, Takashi, 4,373,679, Cl. 241-275.000.
Kocsis, Karoly; Schneider, Peter; Fechtig, Bruno; and Scartazzini, Riccardo, to Ciba-Geigy Corporation. Cephalosporin compounds with terminal aminocarboxylic acid groupings and anti-bacterial use thereof. 4,374,134, Cl. 424-246.000.
Koehler, Raymond A.: *See—*
Gryskiewicz, Gregory A.; and Koehler, Raymond A., 4,374,169, Cl. 428-221.000.
Kofahl, William M. Hydrostatic and oil well pump. 4,373,873, Cl. 417-339.000.
Kohsaka, Yohji: *See—*
Ouchi, Chiaki; and Kohsaka, Yohji, 4,373,951, Cl. 75-123.00N.
Kohzai, Yoshinori; Oyama, Shigeaki; and Koyama, Tatsuo, to Fujitsu Fanuc Limited. Direct current motor having E-shaped interpoles. 4,374,337, Cl. 310-186.000.
Kohzai, Yoshinori; Fujioka, Yoshiki; and Ota, Naoto, to Fujitsu Fanuc Limited. Control system for stopping spindle at predetermined rotational position. 4,374,350, Cl. 318-590.000.
Kolb, Michael: *See—*
Bey, Philippe; Jung, Michel; Kolb, Michael; and Danzin, Charles, 4,374,128, Cl. 424-180.000.
Koltz, Irving M. Multi panel visual device. 4,373,730, Cl. 273-155.000.
Kommineni, Prasad R., to Westinghouse Electric Corp. Semi-flexible gas-insulated transmission line using sandwiched discs for intermittent flexing joints. 4,374,298, Cl. 174-21.00C.
Komori, Kazuhiro: *See—*
Kosa, Yasunobu; and Komori, Kazuhiro, 4,373,249, Cl. 29-571.000.
Komurasaki, Satoshi; and Yamane, Tsuneo. Ignition timing correcting system for internal combustion engine. 4,373,487, Cl. 123-418.000.
Kondo, Nobuaki, to Kabushiki Kaisha Kawai Gakki Seisakusho. Electronic musical instrument. 4,373,415, Cl. 84-1.010.
Kondo, Toshio, to Aisin Seiki Kabushiki Kaisha. Disc brakes. 4,373,616, Cl. 188-73.450.
Konishiroku Photo Industry Co., Ltd.: *See—*
Yoshizaki, Osamu; and Inai, Masayuki, 4,374,385, Cl. 346-1.100.
Konrath, Karl; and Laufer, Helmut, to Robert Bosch GmbH. Fuel injection pump for internal combustion engine. 4,373,492, Cl. 123-502.000.
Koppers Company, Inc.: *See—*
Becker, Andrew R., 4,373,936, Cl. 55-97.000.
Hetrick, Earl C.; and Winter, Donald T., 4,373,998, Cl. 202-258.000.
Koral, Marvin: *See—*
Goodman, Donald; Ceprini, Mario Q.; Hoch, Samuel; and Koral, Marvin, 4,374,057, Cl. 252-426.000.
Korgaonkar, Jaising. Pipe clamp. 4,373,235, Cl. 24-285.000.
Korzenietz, Willi. Apparatus for random number selection. 4,373,728, Cl. 273-144.00B.
Kosa, Yasunobu; and Komori, Kazuhiro, to Hitachi, Ltd. Method of manufacturing a semiconductor integrated circuit device. 4,373,249, Cl. 29-571.000.
Kostler, Hans-Gunter: *See—*
Wehner, Wolfgang; Farooq, Saleem; and Kostler, Hans-Gunter, 4,374,145, Cl. 424-278.000.
Kostuch, Donald J.: *See—*
Bradley, David J.; Gibbs, Dennis D.; Kostuch, Donald J.; and Martin, James S., 4,374,417, Cl. 364-200.000.
Koutsky, Ronald A.: *See—*
Allori, Aldo; Koutsky, Ronald A.; and Wilger, John A., 4,374,375, Cl. 340-52.00A.
Kovach, Stephen M.: *See—*
Hettinger, William P., Jr.; and Kovach, Stephen M., 4,374,019, Cl. 208-120.000.
Koyama, Hideo: *See—*
Yoshioka, Nobuyuki; Suzuki, Tsutai; Haba, Masanori; and Koyama, Hideo, 4,374,160, Cl. 427-101.000.
Koyama, Tatsuo: *See—*
Kohzai, Yoshinori; Oyama, Shigeaki; and Koyama, Tatsuo, 4,374,337, Cl. 310-186.000.
Koziol, Walter, to Modern Home Products Corp. Adjustable venturi tube assembly for a gas barbecue grill. 4,373,505, Cl. 126-39.00E.
Kozlowski, John J., Jr.: *See—*
Nichols, Gary R.; and Kozlowski, John J., Jr., 4,373,486, Cl. 123-414.000.
Kozlowski, Thomas A.: *See—*
Lundquist, Burton R.; and Kozlowski, Thomas A., 4,373,661, Cl. 229-87.00F.
Kozuka, Hirotsugu: *See—*
Nanba, Mitsuo; Ogirima, Masahiko; Kozuka, Hirotsugu; and Shintani, Akira, 4,373,975, Cl. 148-189.000.
Kozuka, Michihiro: *See—*
Kakizaki, Katsumi; and Kozuka, Michihiro, 4,373,293, Cl. 46-206.000.
Kraftwerk Union Aktiengesellschaft: *See—*
Deinlein, Hans; and Kummer, Gottfried, 4,374,083, Cl. 376-306.000.
Krakovsky, Rafael. Long life valve. 4,373,546, Cl. 137-330.000.
Krause, James A.; and Kitsch, Edward A., to Emerson Electric Co. Electrostatic precipitator with modular cabinet and cell washer. 4,373,937, Cl. 55-118.000.
Krautkramer-Branson Incorporated: *See—*
Renzel, Peter; and Vermohlen, Werner, 4,373,394, Cl. 73-606.000.
Kreager, William D.; and Mason, Stanley I., Jr., to Frito-Lay, Inc. Ultrasonic sealing apparatus. 4,373,982, Cl. 156-359.000.
Kreis, Philipp, to GmbH & Co. TRUMA-Geratebau. Water heater. 4,373,472, Cl. 122-14.000.
Krieger, Klaus: *See—*
Greiner, Max; Krieger, Klaus; Schiller, Gottfried; Walk, Wolf-Rudiger; and Walz, Ludwig, 4,373,496, Cl. 123-569.000.
Krone GmbH: *See—*
Lohr, Joachim, 4,374,306, Cl. 179-81.00R.
Kruger, Hermann; and Willmann, Michael, to Volkswagenwerk Aktiengesellschaft. Device for controllable coupling of two shaft parts with a predetermined angle of rotation correlation. 4,373,481, Cl. 123-198.00F.
KTS, Kunstoff-Technische Spezialfertigungen Anni Przytarski: *See—*
Przytarski, Joachim, 4,373,643, Cl. 220-450.000.
Kubota, Ltd.: *See—*
Itatani, Hiroshi; Tone, Masatsugu; and Kurohara, Kazuaki, 4,373,597, Cl. 180-70.0MS.
Kuboto, Masaaki: *See—*
Sakamoto, Yukio; Tanaka, Tetsuo; Kuboto, Masaaki; and Sugitani, Masami, 4,374,369, Cl. 333-182.000.
Kudo, Kazushige; Yamamoto, Shigeo; and Murase, Shigemitsu, to Unitika Limited. Method for manufacturing polyester fibers with good adhesion to rubber. 4,374,031, Cl. 252-8.800.
Kuge, Tsukasa; Matsumoto, Toru; Watanabe, Tsuyoshi; and Tamura, Yasuyuki, to Canon Kabushiki Kaisha. Apparatus for developing electrostatic latent images. 4,373,469, Cl. 118-652.000.
Kuhara, Tetsuji: *See—*
Sakai, Toshihiro; and Kuhara, Tetsuji, 4,374,410, Cl. 364-200.000.
Kuipers, Johannes: *See—*
Dolman, Hendrik; and Kuipers, Johannes, 4,374,143, Cl. 424-273.00R.
Kulkarni, Ravindra D.; and Goodard, Errol D., to Union Carbide Corporation. Silanated calcium carbonate fillers. 4,374,178, Cl. 428-404.000.
Kullack, Manfred: *See—*
Schepers, Bernhard; Nobbe, Volker; Schroder, Bernd; Borer, Werner; and Kullack, Manfred, 4,374,119, Cl. 423-625.000.
Kulp, Leon; and Noggle, Donald E. Manhole leakage indicator and method for using. 4,373,381, Cl. 73-40.50R.
Kumagai, Akira: *See—*
Shibata, Shoji; Kumagai, Akira; Harada, Masatoshi; Yano, Singo; Saito, Hiroshi; and Takahashi, Kunio, 4,374,284, Cl. 568-817.000.
Kummer, Gottfried: *See—*
Deinlein, Hans; and Kummer, Gottfried, 4,374,083, Cl. 376-306.000.
Kundler, Walter; Pientak, Reinhold; Schulz, Claus; and Skerka, Wolfgang, to Anschutz & Co. GmbH. Arrangement for monitoring a rudder control system. 4,374,423, Cl. 364-434.000.
Kunihiro, Yukitoshi, to Matsushita Electric Industrial Co., Ltd. Safety device for electric motor driven kitchen utensils. 4,373,677, Cl. 241-37.500.
Kunz, Peter. Weighing apparatus with electromagnetic force compensation. 4,373,596, Cl. 177-212.000.
Kuribayashi, Yasushi, to Nissan Motor Co., Ltd. Supercharge system of an internal combustion engine. 4,373,335, Cl. 60-602.000.
Kurohara, Kazuaki: *See—*
Itatani, Hiroshi; Tone, Masatsugu; and Kurohara, Kazuaki, 4,373,597, Cl. 180-70.0MS.
Kuroiwa, Hiroshi: *See—*
Nishimura, Yutaka; Kuroiwa, Hiroshi; Kirisawa, Tadashi; and Oyama, Yoshishige, 4,373,387, Cl. 73-204.000.
Kurosaki, Yasuhide: *See—*
Tsukada, Shusei; and Kurosaki, Yasuhide, 4,373,798, Cl. 355-3.0DD.
Kurz, Manfred, to Behr-Thomson Dehnstoffregler GmbH. Multiple contacts, snap-action, thermal switch. 4,374,373, Cl. 337-383.000.
Kuwano, Fumiyoshi: *See—*
Kato, Shinichi; Tsuda, Hiroshi; Yamaki, Kiyoshi; Suzuki, Tadashi; and Kuwano, Fumiyoshi, 4,374,310, Cl. 200-61.540.
Kyker, Robert A., to Brunswick Corporation. Snap-in self-centering mechanism button. 4,373,683, Cl. 242-84.21R.
Kyoto Ceramic Co., Ltd.: *See—*
Inamori, Kazuo; and Miyawaki, Kiyoshige, 4,374,316, Cl. 219-209.000.
Labiol S.A.: *See—*
Brun, Nicole A. A., 4,373,382, Cl. 73-53.000.

Labus, Thomas J.: *See—*
Massey, Lester G.; Brabets, Robert I.; Abel, William A.; Anderson, James K.; Labus, Thomas J.; and George, Davis A., 4,373,864, Cl. 417-46.000.
Lach, Lawrence E.: *See—*
Tekippe, Vincent J.; and Lach, Lawrence E., 4,374,328, Cl. 250-458.100.
Lach, Richard F.; and Calcasola, Richard W., to United Technologies Corporation. Passenger entertainment system transducer failure detector. 4,374,435, Cl. 370-13.000.
Lacombat, Michel; Pircher, Georges; and LeFevre, Herve, to Thomson-CSF. Compact optical coupling device and optical-fiber interferometer gyrometer comprising such a device. 4,373,814, Cl. 356-350.000.
Lacombat, Michel: *See—*
Dubroeucq, Georges; Lacombat, Michel; and Brevignon, Michele, 4,373,774, Cl. 350-6.600.
Ladusaw, William T., to General Electric Company. Variable displacement compressor. 4,373,352, Cl. 62-196.00C.
Ladusaw, William T., to General Electric Company. Discharge valve assembly for compressor. 4,373,882, Cl. 418-270.000.
La Fever, Clifford E.: *See—*
Washburn, William J.; Thompson, Hugh B.; and La Fever, Clifford E., 4,373,422, Cl. 89-33.0CA.
Lagelbauer, Ernest. Centrifuge separator. 4,373,941, Cl. 55-401.000.
Lago, Rudolph M.: *See—*
Haag, Werner O.; and Lago, Rudolph M., 4,374,296, Cl. 585-739.000.
Laib, Donald L., to Morvue, Inc. Scanning beam optical position determining apparatus and method. 4,373,816, Cl. 356-375.000.
L'Air Liquide: *See—*
Barbier, Jean-Paul; and Lerouyer, Gilbert, 4,374,157, Cl. 427-37.000.
Lakatos, Eduard: *See—*
Bozon, Alfred; Lakatos, Eduard; Koberstein, Edgar; Pletka, Hans-Dieter; and Volker, Herbert, 4,374,047, Cl. 252-472.000.
Lama, William L., to Xerox Corporation. Image transmitting system utilizing a gradient index lens. 4,373,780, Cl. 350-96.250.
Lambert, Lloyd J., Jr. Wrist curl machine. 4,373,717, Cl. 272-67.000.
Lancellotti, Enrico, to Sunfilter S.r.l. Reducible volume sun-blind. 4,373,568, Cl. 160-184.000.
Landfors, Arthur A., to Varian Associates, Inc. Diffusion pump for leak detector. 4,373,868, Cl. 417-154.000.
Landriault, Leonard S.: *See—*
Bollfrass, Charles A.; Landriault, Leonard S.; and McDonald, Patrick E., 4,373,754, Cl. 285-334.000.
Lang, Franklin D., to Nitney Corporation. Padding press. 4,373,843, Cl. 412-10.000.
Lange, Dennis M. Steerable auxiliary wheel assembly for vehicles. 4,373,738, Cl. 280-81.500.
Langley, Jeffrey T., to Fiber Industries, Inc. Wholly aromatic polyester capable of forming an anisotropic melt phase consisting essentially of para-oxybenzoyl moiety, bromo-substituted-para-oxybenzoyl moiety, and meta-oxybenzoyl moiety. 4,374,228, Cl. 524-599.000.
Larkins, Thomas H.; Polichnowski, Stanley W.; Tustin, Gerald C.; and Young, David A., to Eastman Kodak Company. Preparation of acetic anhydride. 4,374,070, Cl. 260-549.000.
Larkins, Thomas H., Jr., to Eastman Kodak Company. Preparation of ethylidene diacetate. 4,374,265, Cl. 560-263.000.
Larson, Vivian M.; and Lehman, E. Dale, to Merck & Co., Inc. Herpes sub unit vaccine. 4,374,127, Cl. 424-89.000.
Latham, David J.: *See—*
Burgin, Sidney A.; and Latham, David J., 4,373,972, Cl. 148-12.00B.
Lau, Kreisler S. Y., to Hughes Aircraft Company. Synthesis of bis(ethynylphenyl) compounds. 4,374,291, Cl. 585-320.000.
Laufer, Helmut: *See—*
Konrath, Karl; and Laufer, Helmut, 4,373,492, Cl. 123-502.000.
Lautenschlager, Karl, to Karl Lautenschlager KG, Mobelbeschlagfabrik. Four-joint hinge. 4,373,230, Cl. 16-288.000.
Lauwerijssen, Petrus C.: *See—*
Bouwknegt, Albert; and Lauwerijssen, Petrus C., 4,374,340, Cl. 313-220.000.
LeBlanc, John R.: *See—*
Cohen, Saul M.; and LeBlanc, John R., 4,374,240, Cl. 528-230.000.
Lebouc, Bernard, to Framatome. Tool carrier unit movable over a tube-plate. 4,373,855, Cl. 414-744.00R.
Lebreton, Yves: *See—*
Perineau, Philippe; and Lebreton, Yves, 4,373,703, Cl. 266-131.000.
Lee, Carol S., to Mobil Oil Corporation. Catalytic conversion of methanol to light olefins. 4,374,295, Cl. 585-640.000.
Lee, Chang-Kuei, to Occidental Research Corporation. Pyrolysis process and apparatus. 4,373,994, Cl. 201-22.000.
Lee, George E.: *See—*
Lee, Thomas B. K.; and Lee, George E., 4,374,067, Cl. 260-456.00A.
Lee, Julia L.: *See—*
Crivello, James V.; and Lee, Julia L., 4,374,066, Cl. 260-440.000.
Lee, Robert D., to United States of America, National Aeronautics and Space Administration. Scanning seismic intrusion detection method and apparatus. 4,374,378, Cl. 340-566.000.
Lee, Robert D.: *See—*
Olesin, Andrew; Luke, Kevin K. L.; and Lee, Robert D., 4,374,357, Cl. 323-351.000.
Lee, Thomas B. K.; and Lee, George E., to Hoechst-Roussel Pharmaceuticals, Inc. Intermediates for the preparation of 4-phenyl-1,3-benzodiazepins and methods for preparing the intermediates. 4,374,067, Cl. 260-456.00A.
Lee, Tien P., to Bell Telephone Laboratories, Incorporated. Dual-wavelength light-emitting diode. 4,374,390, Cl. 357-17.000.
Leeds & Northrup Company: *See—*
Fishman, Walter; and Jenkins, Theron W., Jr., 4,374,351, Cl. 318-600.000.
LeFevre, Cecil W.: *See—*
Hunter, Don L.; Woods, William G.; Stone, James D.; and LeFevre, Cecil W., 4,374,271, Cl. 564-310.000.
LeFevre, Herve: *See—*
Lacombat, Michel; Pircher, Georges; and LeFevre, Herve, 4,373,814, Cl. 356-350.000.
Lefrancois, Philip A., to Allied Corporation. Production of silane. 4,374,111, Cl. 423-347.000.
Leger, Robert: *See—*
Maldonado, Paul; Nouguier, Robert; Fayard, Jean-Claude; and Leger, Robert, 4,374,282, Cl. 568-672.000.
Legg, Douglas J.; and Burke, Ben G., to Chevron Research Company. Method and apparatus for restraining radial flow catalytic reactor centerpipes. 4,374,095, Cl. 422-218.000.
Lehman, E. Dale: *See—*
Larson, Vivian M.; and Lehman, E. Dale, 4,374,127, Cl. 424-89.000.
Leiber, Heinz, to Robert Bosch GmbH. Anti skid control system. 4,374,421, Cl. 364-426.000.
Leiberich, Hermann, to Sybron Corporation. Fluid flow control valve for dental instruments. 4,373,699, Cl. 251-139.000.
Leibinsohn, Saul. Liquid flow control devices particularly useful in infusion administration sets. 4,373,524, Cl. 128-214.00R.
Leigh Flexible Structures Limited: *See—*
Fish, Daniel C. E., 4,373,462, Cl. 114-74.00R.
Lenhard, Myron J.: *See—*
Snelling, Christopher; and Lenhard, Myron J., 4,373,799, Cl. 355-3.00R.
Leningradsky Ordena Trudovogo Krasnogo Znameni Institut Textilnoi I Legkoi Promyshlennosti Imeni S.M. Kirova: *See—*
Alexandrov, Sasho P.; Mubarakshin, Gadylsha M.; Volf, Leonard A.; and Burinsky, Stanislav V., 4,374,204, Cl. 521-28.000.
Lerouyer, Gilbert: *See—*
Barbier, Jean-Paul; and Lerouyer, Gilbert, 4,374,157, Cl. 427-37.000.
Lesher, George Y.; Opalka, Chester J., Jr.; and Page, Donald F., to Sterling Drug Inc. 2-Substituted amino-5-(pyridinyl)-nicotinamides and their cardiotonic use. 4,374,141, Cl. 424-266.000.
Leuvering, Johannes H. W.: *See—*
Gribnau, Thomas C. J.; Roeles, Frits; and Leuvering, Johannes H. W., 4,373,932, Cl. 436-501.000.
Levine, Harold I.: *See—*
Cole, Bruce A.; Levine, Harold I.; McGuire, Michael T.; Nelson, Kathleen J.; and Slade, Louise, 4,374,154, Cl. 426-565.000.
Lewis, Jennings B., III: *See—*
Spruell, Jerry V.; and Lewis, Jennings B., III, 4,373,949, Cl. 75-60.000.
LHP Corporation: *See—*
Hutchinson, George M.; and Burchette, Robert L., Jr., 4,373,685, Cl. 242-118.600.
Liang, Shwu-Jian: *See—*
Martellock, Arthur C.; Carlston, Richard L.; and Liang, Shwu-Jian, 4,374,212, Cl. 523-212.000.
Licentia Patent-Verwaltungs-GmbH: *See—*
Van Raamsdonk, Cornelis; and Wartusch, Johann, 4,374,223, Cl. 524-245.000.
Light, Kenneth K.: *See—*
Schreck, Ronald P.; Light, Kenneth K.; Hall, John B.; Schmitt, Frederick L.; Vock, Manfred H.; Schreiber, William L.; Vinals, Joaquin F.; and Kiwala, Jacob, 4,374,055, Cl. 252-522.00R.
Lilaonitkul, Amnuey; and Tews, Richard R., to Kimberly-Clark Corporation. Tampon with wound pledget in the shape of a bell. 4,373,529, Cl. 128-285.000.
Limbocker, Craig F. Air-filter vacuum sweep apparatus. 4,373,939, Cl. 55-287.000.
Lin, Jacob W.; and Weinman, Leslie S., to Honeywell Inc. Plasma polymerized ethane for interlayer dielectric. 4,374,179, Cl. 428-411.000.
Lin, Jiang-Jen; and Knifton, John F., to Texaco Inc. Synthesis of ethanol by homologation of methanol. 4,374,285, Cl. 568-902.000.
Lin, Tung-Yen; and Chow, Philip Y., to T. Y. Lin International. Pier with prestressed resiliant integral deck to absorb docking forces of ships. 4,373,837, Cl. 405-218.000.
Linden, Heinrich; Bornmann, Hans; Gress, Wolfgang; and Wegemund, Bernd, to Henkel Kommanditgesellschaft auf Aktien. Assistants for the preparation of pigment pastes and high-concentration, low viscosity pigment pastes. 4,373,964, Cl. 106-308.00Q.
Lindstrom, Ted R.; and Slade, Louise, to General Foods Corporation. Frozen dough for bakery products. 4,374,151, Cl. 426-19.000.
Lion Corporation: *See—*
Toda, Haruhiko; Higo, Moriaki; Saga, Hitoshi; and Shinbo, Masafu, 4,374,292, Cl. 585-360.000.
Liptay-Wagner, Nick: *See—*
Pryor, Timothy R.; Hockley, Bernard; Liptay-Wagner, Nick; Hageniers, Omer L.; and Pastorius, W. J., 4,373,804, Cl. 356-1.000.
Litton Systems Inc.: *See—*
Doliber, Darrel L.; and Keil, O'Dell M., 4,373,269, Cl. 33-246.000.
Dorsey, Glenn F., 4,373,779, Cl. 350-96.210.

Liu, You C., to Ford Motor Company. Method of reducing springback in mechanically pressed sheet materials-I. 4,373,371, Cl. 72-379.000.
Livesay, Richard E., to Caterpillar Tractor Co. Multiple roller bogey assembly. 4,373,758, Cl. 305-22.000.
Lochner, Karl S.: *See—*
Bauser, Elisabeth; Frik, Martina; Lochner, Karl S.; and Schmidt, Laurenz, 4,373,988, Cl. 156-622.000.
Loebach, Michael H., to Motter Printing Press Co. Diverter mechanism. 4,373,713, Cl. 271-303.000.
Loepfe Brothers Limited: *See—*
Stutz, Hansruedi, 4,373,266, Cl. 33-129.000.
Lohr, Joachim, to Krone GmbH. Zero-loss automatic polarization protection device. 4,374,306, Cl. 179-81.00R.
Lois, Lambros. Device for collecting, transmitting and using solar energy. 4,373,514, Cl. 126-438.000.
Loke, Harvey L. Water conditioning regeneration control. 4,374,025, Cl. 210-140.000.
Lombardi, John P.; Hult, Tore M.; and Trowbridge, Robert H., Jr., to Jimmy Connors Rally Champion Enterprise. Tennis practice backboard. 4,373,720, Cl. 273-29.00A.
Lonati, Francesco, to Costruzioni Meccaniche Lonati S.p.A. Device for correctly positioning yarns prior to knitting in a circular knitting machine. 4,373,360, Cl. 66-131.000.
Long, Alden O., Jr., to AMP Incorporated. Method and apparatus for manufacturing electrical harnesses. 4,373,261, Cl. 29-861.000.
Loos, Michel: *See—*
Comfort, Joseph A.; Perry, Thomas J.; and Loos, Michel, 4,374,413, Cl. 364-200.000.
Comfort, Joseph A.; Perry, Thomas J.; and Loos, Michel, 4,374,414, Cl. 364-200.000.
Lord Corporation: *See—*
Tay, Kay-Kiong, 4,374,218, Cl. 524-86.000.
Lorenzen, John H.; and Majewski, John V., to RTE Corporation. Bayonet-type circuit breaker having a multiple finger integrated contact band. 4,373,772, Cl. 339-130.00R.
Lorenzoni, Loreno: *See—*
Messina, Giuseppe; Moretti, Mario D.; and Lorenzoni, Loreno, 4,374,279, Cl. 568-558.000.
Messina, Giuseppe; Moretti, Mario D.; and Lorenzoni, Loreno, 4,374,280, Cl. 568-558.000.
Losell, Ingvar F.: *See—*
Stenberg, Kaj O.; Traven, Lars J. C.; Losell, Ingvar F.; and Johnsson, Bo A., 4,374,088, Cl. 422-46.000.
Loter, Ira, to Mallinckrodt International Corp. Process for preparing acid cheese curd. 4,374,152, Cl. 426-39.000.
Loucks, George R.; and Campbell, John R., to General Electric Company. Block copolymers of polyphenylene oxides and non-sterically-hindered high molecular weight aromatic polycarbonates. 4,374,233, Cl. 525-394.000.
Louzon, Theodore J.: *See—*
Geyling, Franz T.; and Louzon, Theodore J., 4,374,161, Cl. 427-160.000.
Lovie, James V.: *See—*
Iwao, Kumiy R.; and Lovie, James V., 4,374,089, Cl. 422-70.000.
Lubnitz, Klaus. Cleaning device for a hung fabric. 4,373,226, Cl. 15-302.000.
Lubrizol Corporation, The: *See—*
Coleman, Lester E., 4,374,034, Cl. 252-51.50A.
Lucas, Bernard H.: *See—*
Skeaff, James M.; Ritcey, Gordon M.; Haque, Kazi E.; and Lucas, Bernard H., 4,374,096, Cl. 423-9.000.
Lucas Industries Limited: *See—*
Campbell, Stephen W.; Cragg, Eric E.; Elwell, Michael J.; and Johnson, Raymond A., 4,374,18[illegible], Cl. 429-187.000.
Glaze, Stanley G., 4,373,744, Cl. 2[illegible]0-707.000.
Luccarelli, Domenick, Jr.; and Yoshida, Takao, to International Flavors & Fragrances Inc. Flavoring with 4-methyl-3-cyclohexene-1-carboxylic acid. 4,374,123, Cl. 424-49.000.
Luk, Kong; and Rogers, Norman H., to Beecham Group Limited. 13-Oxo-monic acid esters useful as antibacterial and antimycoplasmal agents. 4,374,147, Cl. 424-283.000.
Luke, Kevin K. L.: *See—*
Olesin, Andrew; Luke, Kevin K. L.; and Lee, Robert D., 4,374,357, Cl. 323-351.000.
Lukens, Inc.: *See—*
Roper, Charles R., Jr.; Strattan, John K.; Hetherington, Roy, Jr.; and Hiller, Austin J., 4,373,967, Cl. 148-2.000.
Lundquist, Burton R.; and Kozlowski, Thomas A., to Armour and Company. Carton with inspection flap and easy opening features and blanks therefor. 4,373,661, Cl. 229-87.00F.
Lunn, Royston C.; MacAfee, J. Edwin; Grabowski, Robert C.; Renneker, Dennis N.; and Winkler, John M., to American Motors Corporation. Transfer case. 4,373,604, Cl. 180-247.000.
Lussiez, Guy W.; and Jha, Mahesh C., to Amax Inc. Chemical dissolution of scale formed during pressure leaching of nickeliferous oxide and silicate ores. 4,374,101, Cl. 423-150.000.
Lutz, Gerhard, to Gelu Reutlinger Steinwerk Gerhard Lutz GmbH. Supporting bolt. 4,373,309, Cl. 52-182.000.
Lutz, Milton F., Sr. Stackable can. 4,373,633, Cl. 206-508.000.
Lux, Peter W., to U.S. Philips Corporation. Device for determining a radiation attenuation distribution in a plane of a body. 4,374,419, Cl. 364-414.000.
Lyapunov, Andrei Y.: *See—*
Gorelik, Rudolf A.; Dukhovskoi, Evgeny A.; Kleiman, Alexandr M.; Kleimenov, Nikolai A.; Markevich, Andrei M.; Ponomarev, Ardalion N.; Silin, Askold A.; Skok, Valentina M.; Talroze, Viktor L.; Khomyakov, Anatoly V.; and Lyapunov, Andrei Y., 4,374,180, Cl. 428-421.000.
Lycan, Goodwin A. Gauge calibration block. 4,373,267, Cl. 33-168.00R.
Lydiard, Graeme K., to Lydiard Shoe Co. Ltd. Footwear. 4,373,275, Cl. 36-129.000.
Lydiard Shoe Co. Ltd.: *See—*
Lydiard, Graeme K., 4,373,275, Cl. 36-129.000.
M.A.N.-ROLAND Druckmaschinen Aktiengesellschaft: *See—*
Kobler, Ingo, 4,373,445, Cl. 101-365.000.
Maag Gear-Wheel & Machine Company Ltd.: *See—*
Spaeth, Hans, 4,373,268, Cl. 33-179.50R.
MacAfee, J. Edwin: *See—*
Lunn, Royston C.; MacAfee, J. Edwin; Grabowski, Robert C.; Renneker, Dennis N.; and Winkler, John M., 4,373,604, Cl. 180-247.000.
MacDonald, Russel J.; and Hodgdon, Russell B., to Ionics Incorporated. Synthesis of base-stable aliphatic anion exchange polymers. 4,374,206, Cl. 521-38.000.
MacEwen, George E., to Phillips Petroleum Company. Cartridge-type dispenser. 4,373,646, Cl. 222-327.000.
Maciejewski, Edward T.: *See—*
Gardner, Kenneth L.; Gootzait, Edward; Maciejewski, Edward T.; and Fisher, Donald L., 4,373,451, Cl. 110-101.0CC.
MacInnis, Martin B.: *See—*
Kim, Tai K.; MacInnis, Martin B.; McClintic, Robert P.; and Vogt, Martin C., 4,374,099, Cl. 423-54.000.
Mackay, Donald A. M.: *See—*
Stroz, John J.; and Mackay, Donald A. M., 4,374,122, Cl. 424-48.000.
Mackison, Robert: *See—*
Hancock, Ronald D.; and Mackison, Robert, 4,374,263, Cl. 560-204.000.
MacPhee, Ralph G. Storeroom bin marker. 4,373,466, Cl. 116-315.000.
MacTaggart, John M.: *See—*
Chen, Shi-Chow; and MacTaggart, John M., 4,374,069, Cl. 260-465.400.
Madwed, Albert. Long term storage and use of solar energy. 4,373,573, Cl. 165-2.000.
Maggiulli, Cataldo A.: *See—*
Kim, Chang-Kyu; and Maggiulli, Cataldo A., 4,374,253, Cl. 548-360.000.
Magnavox Government and Industrial Electronics Company: *See—*
Nichols, Gary R.; and Kozlowski, John J., Jr., 4,373,486, Cl. 123-414.000.
Mahaffy & Harder Engineering Co.: *See—*
Mahaffy, Reid A.; and Anderson, George W., 4,373,341, Cl. 60-721.000.
Mahaffy, Reid A.; and Anderson, George W., to Mahaffy & Harder Engineering Co. Expandible package for dispensing containers. 4,373,341, Cl. 60-721.000.
Majewski, John V.: *See—*
Lorenzen, John H.; and Majewski, John V., 4,373,772, Cl. 339-130.00R.
Maki, Toshimichi: *See—*
Date, Takasaburo; Maki, Toshimichi; Iguchi, Mitsuya; Iwamaru, Sumifusa; and Watanabe, Hisashi, 4,373,911, Cl. 432-152.000.
Maldonado, Paul; Nouguier, Robert; Fayard, Jean-Claude; and Leger, Robert, to Elf France. Ethers of polyols, their preparation and use. 4,374,282, Cl. 568-672.000.
Malec, Robert E., to Edwin Cooper, Inc. Dispersant and lubricating oil containing the dispersant. 4,374,033, Cl. 252-49.600.
Mallinckrodt International Corp.: *See—*
Loter, Ira, 4,374,152, Cl. 426-39.000.
Mallinson, Richard B., to Singer Company, The. Laser altimeter and probe height sensor. 4,373,805, Cl. 356-4.000.
Maloney, Edward P.: *See—*
Cory, Thomas R.; Cory, Lyman R.; and Maloney, Edward P., 4,373,737, Cl. 280-30.000.
Maloof, Ralph P. Method of making propeller blade. 4,373,241, Cl. 29-156.80P.
Malott, Theodore A.; and Frost, Barry L., to Clark Equipment Company. Control for mechanical transmission. 4,373,403, Cl. 74-337.500.
Malwah, Manohar L., to Signetics Corporation. Process for fabricating a high capacity memory cell. 4,373,250, Cl. 29-571.000.
Mano, Tetsuro, to Totai Co., Ltd. Apparatus for cutting connecting portions of a sausage chain. 4,373,231, Cl. 17-1.00F.
Mantelle, Jean; and Trouillet, Georges, to Societe Anonyme dite: Vallourec. Joint for pipe intended for petroleum industry. 4,373,750, Cl. 285-55.000.
Marathon Oil Company: *See—*
Bruce, Charles R., 4,373,815, Cl. 356-358.000.
March, Edward J.; and Newman, Raymond J., to Western Electric Co., Inc. High pressure condensation soldering, fusing or brazing. 4,373,658, Cl. 228-242.000.
Maresca, Louis M.: *See—*
Berger, Mitchell H.; Maresca, Louis M.; and Steiner, Ulrich A., 4,374,239, Cl. 528-176.000.
Markevich, Andrei M.: *See—*
Gorelik, Rudolf A.; Dukhovskoi, Evgeny A.; Kleiman, Alexandr M.; Kleimenov, Nikolai A.; Markevich, Andrei M.; Ponomarev, Ardalion N.; Silin, Askold A.; Skok, Valentina M.; Talroze, Viktor L.; Khomyakov, Anatoly V.; and Lyapunov, Andrei Y., 4,374,180, Cl. 428-421.000.

Markowicz, Victor: *See—*
Churchill, Richard W.; Hartman, Don W.; Howard, Richard A.; and Markowicz, Victor, 4,373,726, Cl. 273-138.00A.
Markowitz, Harold T., to Medtronic, Inc. Marker channel telemetry system for a medical device. 4,374,382, Cl. 340-870.010.
Markus, Gerardus A., to Black, Sivalls & Bryson. Fuel reactor. 4,373,899, Cl. 431-158.000.
Marley Company: *See—*
Bell, Samuel W., Jr., 4,374,072, Cl. 261-109.000.
Marquess, Gerald E.; and Nell, David J. System for electrically heating and regenerating spent activated carbon. 4,374,092, Cl. 422-199.000.
Martel, Alain: *See—*
Menard, Marcel; and Martel, Alain, 4,374,065, Cl. 260-245.20R.
Martel, Jacques; Tessier, Jean; and Teche, Andre, to Roussel Uclaf. Novel ethers containing a lactone group and a chiral atom. 4,374,257, Cl. 549-302.000.
Martell, Michael D. Venting, self-stopping, aspirating syringe. 4,373,535, Cl. 128-765.000.
Martellock, Arthur C.; Carlston, Richard L.; and Liang, Shwu-Jian, to Xerox Corporation. Sheet handling device. 4,374,212, Cl. 523-212.000.
Martens, Jurgen: *See—*
Kleemann, Axel; Martens, Jurgen; and Samson, Marc, 4,374,062, Cl. 260-112.50R.
Martin, Hardison G.: *See—*
Ponto, Robert; and Martin, Hardison G., 4,374,300, Cl. 179-1.0AT.
Martin, James S.: *See—*
Bradley, David J.; Gibbs, Dennis D.; Kostuch, Donald J.; and Martin, James S., 4,374,417, Cl. 364-200.000.
Martin Marietta Corporation: *See—*
Rosskopf, Philip A., 4,373,956, Cl. 106-90.000.
Martin, Richard T., to Applied Magnetics Corporation. Mask positioning carriage assembly. 4,373,470, Cl. 118-720.000.
Martin, Robert J.; Alderson, Loren L.; and Carlin, Jerry F., to Cessna Aircraft Company, The. Warm-up valve in a variable displacement system. 4,373,869, Cl. 417-213.000.
Martin, Ronald G.: *See—*
Powers, Joseph; Trocciola, John C.; and Martin, Ronald G., 4,374,185, Cl. 429-36.000.
Martini, Alfred R. G., to Tenneco Inc. Tubular exhaust manifold. 4,373,329, Cl. 60-305.000.
Maruko, Saburo. Apparatus for producing fresh water from sea water. 4,373,996, Cl. 202-173.000.
Marvin Glass & Associates: *See—*
Hanson, Steven P.; and Breslow, Jeffrey D., 4,373,729, Cl. 273-153.00S.
Maschinenfabrik Augsburg-Nurnberg Aktiengesellschaft: *See—*
Hirt, Alfred, 4,373,512, Cl. 126-418.000.
Masheff, Michael S.: *See—*
Salzer, Thomas E.; and Masheff, Michael S., 4,373,653, Cl. 228-104.000.
Mason, Stanley I., Jr.: *See—*
Kreager, William D.; and Mason, Stanley I., Jr., 4,373,982, Cl. 156-359.000.
Mason, William L.; and Russell, William K. Feed control system for pumping fluids to dishwashers and the like. 4,373,863, Cl. 417-12.000.
Massey-Ferguson Services N.V.: *See—*
McNaught, James B., 4,373,537, Cl. 130-27.00R.
Massey, Lester G.; Brabets, Robert I.; Abel, William A.; Anderson, James K.; Labus, Thomas J.; and George, Davis A., to CNG Research Company. System for pumping fluids at constant pressure. 4,373,864, Cl. 417-46.000.
Masuda, Teruo; Morita, Masayasu; Yamaguchi, Kazuyuki; and Harada, Yoshikazu, to France Bed Co., Ltd. Apparatus for chiropractic therapy and massage. 4,373,516, Cl. 128-57.000.
Matalia, Harshad D.; and Navi, Menashe, to American Newspaper Publishers Association. Method of high viscosity inking in rotary newspaper presses. 4,373,443, Cl. 101-221.000.
Mateja, Ludvik; and Chaloupka, Zdenek, to Motorpal Jihlava, narodni podnik. Arrangement for working internal rotational surfaces of metal parts in a cylindrical opening having a high slenderness ratio. 4,374,313, Cl. 219-69.00E.
Materna, Peter. High-efficiency non-tracking solar collector device. 4,373,513, Cl. 126-422.000.
Mathe, Istvan; and Kasper, Alan H., to Allied Corporation. Electrical connector including insulation-opening contact. 4,373,769, Cl. 339-97.00R.
Mathews, Harlan P.: *See—*
Bildstein, Carl R.; Heibein, Harry P.; and Mathews, Harlan P., 4,374,386, Cl. 346-75.000.
Mathues, Thomas P., to General Motors Corporation. Controlled slip torque converter clutch. 4,373,617, Cl. 192-3.310.
Matlock, Gordon E.; and Hornkohl, Owen T., to Moehlenpah Industries, Inc. Apparatus for end-plating elongate members such as railroad ties. 4,373,652, Cl. 227-100.000.
Matson, Wayne R., to Environmental Sciences Associates, Inc. Testing reagent. 4,374,041, Cl. 436-60.000.
Matsufuji, Yohji: *See—*
Eida, Tsuyoshi; Yano, Yasuhiro; Matsufuji, Yohji; Haruta, Masahiro; and Ohta, Tokuya, 4,373,954, Cl. 106-20.000.
Matsumoto, Toru: *See—*
Kuge, Tsukasa; Matsumoto, Toru; Watanabe, Tsuyoshi; and Tamura, Yasuyuki, 4,373,469, Cl. 118-652.000.
Matsumura, Kazuaki; and Nakanishi, Seiki, to New Nippon Electric Company, Ltd. Electrical circuit wiring arrangement and its soldering method. 4,373,260, Cl. 29-840.000.
Matsuno, Yoshio, to Nissan Motor Co., Ltd. Dash panel construction. 4,373,745, Cl. 280-752.000.
Matsuoka, Hideoki: *See—*
Miki, Hiroyuki; and Matsuoka, Hideoki, 4,373,749, Cl. 280-807.000.
Matsushita Electric Industrial Co., Ltd.: *See—*
Kunihiro, Yukitoshi, 4,373,677, Cl. 241-37.500.
Nagamoto, Shunichi, 4,373,392, Cl. 73-336.500.
Oshima, Mitsuaki; Neichi, Yutaka; Iga, Atsushi; and Wada, Ryoichi, 4,374,403, Cl. 360-113.000.
Yamashita, Akira; and Hiroyuki, Nagai, 4,374,398, Cl. 358-143.000.
Matsushita Electric Works, Ltd.: *See—*
Nakamura, Yoshimitsu, 4,373,256, Cl. 29-598.000.
Okahashi, Keiji; Motoyama, Masanori; and Furukawa, Satoru, 4,374,311, Cl. 200-269.000.
Matsushita, Yoshio, to Iwata Air Compressor Manufacturing Company Ltd. Worm-type rotary fluid compressor. 4,373,881, Cl. 418-195.000.
Matsuura, Tsuyoshi; Fujiwara, Hiroshi; Aihara, Mamoru; Takahashi, Yutaka; and Nakajima, Yoshio, to Olympus Optical Company Ltd. Film end detector for use in automatic film winding camera. 4,373,796, Cl. 354-173.000.
Mattauch, Robert J.: *See—*
United States of America, National Aeronautics and Space Administration; Mattauch, Robert J.; and Seabaugh, Alan C., 4,373,989, Cl. 156-635.000.
Mattel, Inc.: *See—*
Douglas, Raymond J.; May, Herbert; Poznick, Jeffrey B.; and Sweet, Roger H., 4,373,289, Cl. 46-1.00R.
Mattuck, Morris; and Comte, Rheal, to Canadian General Electric Company Limited. Cut-out fuse tube. 4,373,555, Cl. 138-140.000.
Maui Land & Pineapple Company, Inc.: *See—*
Tsutsumi, Masato, 4,373,432, Cl. 99-542.000.
Maurer, Herman J., to J. I. Case Company. Quick coupling and release mechanism for buckets. 4,373,852, Cl. 414-723.000.
Max-Planck-Gesellschaft zur Forderung der Wissenschaften e.V.: *See—*
Bauser, Elisabeth; Frik, Martina; Lochner, Karl S.; and Schmidt, Laurenz, 4,373,988, Cl. 156-622.000.
Maxs AG: *See—*
Greutert, Albert, 4,374,026, Cl. 210-493.500.
May & Baker Limited: *See—*
Hill, Jack; Sharp, Brian W.; Warburton, Dennis; Walker, Robert B., deceased; and Walker, Thomas, administrator, 4,374,136, Cl. 424-251.000.
May, Herbert: *See—*
Douglas, Raymond J.; May, Herbert; Poznick, Jeffrey B.; and Sweet, Roger H., 4,373,289, Cl. 46-1.00R.
Mayer, Edward F.; Diamond, Arthur S.; and Chang, Paul, to Ricoh Company, Ltd. Carrier coating compositions of butadiene-acrylonitrile rubber and polyurethane. 4,374,192, Cl. 430-108.000.
Mayer, Walter P.: *See—*
Berger, Mitchell H.; Mayer, Walter P.; and Ward, Robert J., 4,374,237, Cl. 528-28.000.
Mayo, John H. Test tool for sub-sea well head housings and method of testing. 4,373,380, Cl. 73-40.50R.
Maysteel Corporation: *See—*
Janos, Alfred G., 4,373,324, Cl. 59-78.100.
McAndrew, James R. CFC Expansion arch. 4,373,913, Cl. 433-7.000.
McBride, Edward D.: *See—*
Hall, Charles B.; McBride, Edward D.; and Young, Robert F., 4,373,920, Cl. 440-59.000.
Hall, Charles B.; McBride, Edward D.; and Young, Robert F., 4,373,921, Cl. 440-61.000.
McCarter, Robert J., to United States of America, Commerce. Smolder and flame resistant insulation materials, composition and method. 4,374,171, Cl. 428-288.000.
McCartney, Joseph F.; Jones, Thomas E.; and Johnson, Leopold J., to United States of America, Navy. Polymer packaged cell in a sack. 4,374,186, Cl. 429-154.000.
McClellan, Thomas R.: *See—*
Ewen, James H.; McClellan, Thomas R.; McMillin, Michael H.; and Murray, Pat L., 4,374,210, Cl. 521-159.000.
McClintic, Robert P.: *See—*
Kim, Tai K.; MacInnis, Martin B.; McClintic, Robert P.; and Vogt, Martin C., 4,374,099, Cl. 423-54.000.
McClure, B. Thompson, to Honeywell Inc. Chemical bias agent detection. 4,374,090, Cl. 422-98.000.
McCombs, Norman R., to Greene & Kellogg, Incorporated. Modular industrial oxygen concentrator. 4,373,938, Cl. 55-160.000.
McCrink, Michael P. Signalling means for a crustacean trap. 4,373,288, Cl. 43-100.000.
McDermott Incorporated: *See—*
Haney, James A., 4,373,835, Cl. 405-195.000.
McDonald, Patrick E.: *See—*
Bollfrass, Charles A.; Landriault, Leonard S.; and McDonald, Patrick E., 4,373,754, Cl. 285-334.000.
McDonnell Douglas Corporation: *See—*
Barajas, Felix, 4,373,974, Cl. 148-24.000.
McElroy, David J., to Texas Instruments Incorporated. Method of making high density semiconductor device such as floating gate electrically programmable ROM or the like. 4,373,248, Cl. 29-571.000.
McEntire, Edward E., to Texaco Development Corporation. Process for converting substituted ethylene carbonates into substituted ethylene oxides using tin catalysts. 4,374,259, Cl. 549-518.000.
McGarry, Errol J., to ICI Australia Limited. Process for the preparation of γ-unsaturated carboxylates. 4,374,264, Cl. 560-205.000.

McGinn, Michael, to Motorola, Inc. Integrated horizontal oscillator employing an on-chip capacitor for use in a television receiver. 4,374,366, Cl. 331-111.000.
McGinnis, James L.; and Conciatori, Anthony B., to Celanese Corporation. Preparation of hydroxy aromatic carboxylic acids and ester derivatives thereof. 4,374,262, Cl. 560-56.000.
McGregor, Charles W.; and Summers, Stephen E., to Essex Group, Inc. High solids polyamide-imide magnet wire enamel. 4,374,221, Cl. 524-94.000.
McGuckin, Hugh G.; Hartman, Susan E.; and Specht, Donald P., to Eastman Kodak Company. Dye imbibition photohardenable imaging material and process for forming positive dye images. 4,374,194, Cl. 430-199.000.
McGuire, Michael T.: *See—*
 Cole, Bruce A.; Levine, Harold I.; McGuire, Michael T.; Nelson, Kathleen J.; and Slade, Louise, 4,374,154, Cl. 426-565.000.
McKee, Donald H.: *See—*
 Edwards, Robert E.; McKee, Donald H.; and Brown, Claude D., 4,373,363, Cl. 69-28.000.
McKenzie, Joseph A., Jr. Component mask for printed circuit boards and method of use thereof. 4,373,655, Cl. 228-180.00R.
McKinley, John T., to Foundry & Steel, Inc. Two speed transmission. 4,373,927, Cl. 474-74.000.
McKinnis, John F., Jr.: *See—*
 Miller, Norman; and McKinnis, John F., Jr., 4,373,450, Cl. 109-75.000.
McMahon, Paul E.: *See—*
 Kim, Sang N.; McMahon, Paul E.; Riggs, John P.; and Rhodes, John M., 4,374,114, Cl. 423-447.100.
McMahon, Roy C., to Electrostatic Equipment Company. Treatment of fluid hydrocarbon fuels with electric fields. 4,373,494, Cl. 123-538.000.
McMillan, John C.: *See—*
 Nussdorf, Jeffrey M.; and McMillan, John C., 4,373,570, Cl. 160-352.000.
McMillen, Russell G., to International Harvester Co. Heat exchanger assembly. 4,373,577, Cl. 165-122.000.
McMillin, Michael H.: *See—*
 Ewen, James H.; McClellan, Thomas R.; McMillin, Michael H.; and Murray, Pat L., 4,374,210, Cl. 521-159.000.
McNaught, James B., to Massey-Ferguson Services N.V. Grain separating apparatus. 4,373,537, Cl. 130-27.00R.
Mead Corporation, The: *See—*
 Oliff, James R., 4,373,630, Cl. 206-434.000.
 Wood, Prentice J., 4,373,627, Cl. 206-201.000.
Meckel, Joachim F.: *See—*
 Flockenhaus, Claus; Galow, Manfred; Meckel, Joachim F.; and Joseph, Horst G., 4,373,997, Cl. 202-230.000.
Medalie Manufacturing Co.: *See—*
 Petersen, Ross K., 4,373,940, Cl. 55-328.000.
Medina, Mario, to Rosen, Harry. Process for waste water purification. 4,374,028, Cl. 210-669.000.
Medtronic, Inc.: *See—*
 Markowitz, Harold T., 4,374,382, Cl. 340-870.010.
Meetham, Geoffrey W.; and Gray, John D., to Rolls-Royce Limited. Alloy composition suitable for use in making castings, and a casting made therefrom. 4,374,084, Cl. 420-449.000.
Mei, Joseph S.: *See—*
 Pitrolo, Augustine A.; Mei, Joseph S.; and Shang, Jerry Y., 4,373,454, Cl. 110-347.000.
Meier, Erwin: *See—*
 Horler, Hansulrich; and Meier, Erwin, 4,373,336, Cl. 60-606.000.
Melinat, Wolfgang, to General Motors Corporation. Laminated disc brake pad assembly. 4,373,615, Cl. 188-73.100.
Menard, Marcel; and Martel, Alain, to Bristol-Myers Company. Antibacterial agents of the β-lactam type. 4,374,065, Cl. 260-245.20R.
Mensink, Kornelis A.: *See—*
 Wittkampf, Frederik H. M.; Mensink, Kornelis A.; and Brouwer, Hendrik L., 4,373,531, Cl. 128-419.0PG.
Merck & Co., Inc.: *See—*
 Baldwin, John J.; Ponticello, Gerald S.; Vickers, Stanley; and Steuerwald, Alfred, 4,374,140, Cl. 424-263.000.
 Igoe, Robert S.; and Taylor, Richard J., 4,374,155, Cl. 426-569.000.
 Larson, Vivian M.; and Lehman, E. Dale, 4,374,127, Cl. 424-89.000.
 Nutt, Ruth F., 4,374,060, Cl. 260-112.50R.
Merck Patent Gesellschaft mit Beschrankter Haftung: *See—*
 Draenert, Klaus, 4,373,217, Cl. 3-1.900.
Merianos, John J.: *See—*
 Green, Harold A.; Merianos, John J.; and Petrocci, Alfonso N., 4,374,244, Cl. 542-476.000.
Merrell Toraude et Compagnie: *See—*
 Bey, Philippe; Jung, Michel; Kolb, Michael; and Danzin, Charles, 4,374,128, Cl. 424-180.000.
Merrick, Richard L., Jr.: *See—*
 Nelson, Ronald C.; and Merrick, Richard L., Jr., 4,373,719, Cl. 273-1.00E.
Mertens, Walter; Thubeauville, Heinz; and Glittenberg, Wilhelm, to Dr. C. Otto & Comp. G.m.b.H. Method for renewing the brickwork of coke ovens. 4,373,244, Cl. 29-402.080.
Messerschmitt, Elmar. Heatable sieve for screen printing. 4,373,441, Cl. 101-127.100.
Messina, Giuseppe; Moretti, Mario D.; and Lorenzoni, Loreno, to Euteco Impianti S.p.A. Process for the preparation of dicumyl peroxide. 4,374,279, Cl. 568-558.000.
Messina, Giuseppe; Moretti, Mario D.; and Lorenzoni, Loreno, to Euteco Impianti S.p.A. Process for the preparation of dicumyl peroxide. 4,374,280, Cl. 568-558.000.
Meyer, Friedhelm: *See—*
 Giepen, Ulrich; and Meyer, Friedhelm, 4,374,380, Cl. 340-660.000.
Meyer, Louis W., to Dow Chemical Company, The. Compositions containing mold release agents. 4,374,222, Cl. 524-241.000.
Meyerle, Michael: *See—*
 Ehrlinger, Friedrich; and Meyerle, Michael, 4,373,359, Cl. 74-687.000.
Mibae, Jiro: *See—*
 Taniguchi, Takashi; and Mibae, Jiro, 4,374,158, Cl. 427-41.000.
Michael, Richard A., to Deere & Company. Floating manifold. 4,373,622, Cl. 192-85.0AA.
Michalski, William J. Enclosure arrangement for warmed footwear. 4,373,274, Cl. 36-2.600.
Michels, Albertus P. J.: *See—*
 Asselman, George A. A.; and Michels, Albertus P. J., 4,373,343, Cl. 62-238.600.
Michie, William J., Jr., to Union Carbide Corporation. Extruded gloss improvement in pipe blends with low pressure low density polyethylene. 4,374,227, Cl. 524-528.000.
Microlife Technics, Inc.: *See—*
 Olsen, Ronald H., 4,374,200, Cl. 435-172.000.
Middaugh, James F.: *See—*
 Mowles, Donald L.; Middaugh, James F.; Rutnarak, Sangvorn; and Genese, Joseph N., 4,373,559, Cl. 141-18.000.
Miki, Hiroyuki; and Matsuoka, Hideoki, to Nissan Motor Co., Ltd. Seat belt retractor. 4,373,749, Cl. 280-807.000.
Mikoshiba, Hitoshi, to Shinshu Seiki Kabushiki Kaisha; and Kabushki Kaisha Suwa Seikosha. Character ring-selecting type printer. 4,373,439, Cl. 101-93.090.
Mildoy Enterprises: *See—*
 Miller, Lester, 4,373,223, Cl. 7-151.000.
Miles, Derek A.; and Miles, Julie M. T. Cooking vessel. 4,373,511, Cl. 126-369.000.
Miles, Julie M. T.: *See—*
 Miles, Derek A.; and Miles, Julie M. T., 4,373,511, Cl. 126-369.000.
Miletech, Inc.: *See—*
 Re, Ronald, 4,373,502, Cl. 123-512.000.
Miller, Charles D. Loudspeaker cone stiffeners. 4,373,607, Cl. 181-166.000.
Miller, Franklyn D.; and Muller, Werner C., to National Distillers & Chemical Corp. Rapid utilization of disaccearides by fermentation. 4,374,198, Cl. 435-162.000.
Miller, James A.: *See—*
 Reid, Taylor A.; Miller, James A.; and Barber, Duane G., 4,373,813, Cl. 356-326.000.
Miller, Leonard A., Jr., to Giddings & Lewis, Inc. Pallet transfer system. 4,373,840, Cl. 414-225.000.
Miller, Lester, to Mildoy Enterprises. Container opener. 4,373,223, Cl. 7-151.000.
Miller, Norman; and McKinnis, John F., Jr., to Schwab Safe Co., Inc. Diskette safe. 4,373,450, Cl. 109-75.000.
Milli, Ottavio. System for thread guiding in winding machines. 4,373,686, Cl. 242-158.200.
Milliken Research Corporation: *See—*
 Kluger, Edward W.; and Rolen, Jack L., 4,374,068, Cl. 260-465.00D.
Mills, Ned D., to Varitran, Inc. Variable ratio fluid-mechanical drive apparatus. 4,373,408, Cl. 74-687.000.
Minet, Gunter: *See—*
 Schwarz, Herwig. J.; Burde, Hans-Jurgen H.; and Minet, Gunter, 4,374,172, Cl. 428-308.400.
Minnesota Mining and Manufacturing Company: *See—*
 Errede, Louis A.; Stoesz, James D.; and Winter, George D., deceased, 4,373,519, Cl. 128-156.000.
 Kerfeld, Donald J., 4,374,077, Cl. 264-22.000.
 Patterson, Richard A., 4,373,978, Cl. 156-69.000.
Minolta Camera Co., Ltd.: *See—*
 Taniguchi, Nobuyuki; and Yuasa, Yoshio, 4,373,793, Cl. 354-31.000.
 Yuge, Shizuo; Kitou, Nobuo; Yamamoto, Toshio; and Kanesaka, Michiru, 4,373,802, Cl. 355-14.0FU.
Minophagen Pharmaceutical Company: *See—*
 Shibata, Shoji; Kumagai, Akira; Harada, Masatoshi; Yano, Singo; Saito, Hiroshi; and Takahashi, Kunio, 4,374,284, Cl. 568-817.000.
Mir, Jose M., to Eastman Kodak Company. Light valve devices and electronic imaging/scan apparatus with locationally-interlaced optical addressing. 4,374,397, Cl. 358-75.000.
Misawa, Mitsukuni: *See—*
 Onda, Takanori; Kawasaki, Hiroshi; and Misawa, Mitsukuni, 4,373,601, Cl. 180-226.000.
Misono, Masayoshi; and Kitamura, Shigeki, to Hitachi, Ltd. Color picture tube with electrically conductive frit film on envelope surface. 4,374,344, Cl. 313-479.000.
Missout, Gilles, to IREQ—Institut de Recherche de l'Hydro-Quebec. System and method of sensing current in high voltage transmission lines utilizing the transmission of digital information by optical fibers. 4,374,359, Cl. 324-96.000.
Mitchell, Edward J. Airstream heater. 4,373,912, Cl. 432-222.000.
Mitsubishi Denki Kabushiki Kaisha: *See—*
 Ishii, Toshiaki, 4,373,610, Cl. 187-29.00R.
 Kamahara, Koichi, 4,374,393, Cl. 357-30.000.
Mitsubishi Jukogyo Kabushiki Kaisha: *See—*
 Fujiwara, Haruyoshi, 4,373,993, Cl. 162-347.000.

Mitsubishi Kinzoku Kabushiki Kaisha: *See—*
 Negishi, Hideo; Goto, Kaoru; and Takaya, Sueji, 4,373,839, Cl. 408-59.000.
Mitsubishi Pencil Co., Ltd.: *See—*
 Kawakubo, Takamasa; and Hirasawa, Kiyosi, 4,374,225, Cl. 524-302.000.
Mitsui Toatsu Chemicals, Inc.: *See—*
 Yuasa, Teruo; Yamazaki, Noboru; and Morimoto, Yoshio, 4,374,272, Cl. 564-315.000.
Mitzel, Wilhelm, to GAO Gesellschaft fur Automation und Organisation mbH. Apparatus for transporting sheet material. 4,373,712, Cl. 271-272.000.
Miyakawa, Hideaki: *See—*
 Miyake, Kanichi; Tokuda, Masahiro; Aoki, Takaaki; Miyakawa, Hideaki; and Tamura, Yasuo, 4,374,217, Cl. 524-47.000.
Miyake, Kanichi; Tokuda, Masahiro; Aoki, Takaaki; Miyakawa, Hideaki; and Tamura, Yasuo, to Hohnen Oil Co., Ltd. Cold-setting starch adhesive. 4,374,217, Cl. 524-47.000.
Miyashita, Hideo: *See—*
 Inaba, Hajimu; and Miyashita, Hideo, 4,374,349, Cl. 318-568.000.
Miyashita, Ikuro: *See—*
 Obara, Sanshiro; and Miyashita, Ikuro, 4,373,379, Cl. 73-40.50R.
Miyata, Toshiyuki: *See—*
 Hirashima, Tsuneaki; and Miyata, Toshiyuki, 4,374,250, Cl. 548-305.000.
Miyawaki, Kiyoshige: *See—*
 Inamori, Kazuo; and Miyawaki, Kiyoshige, 4,374,316, Cl. 219-209.000.
Miyoshi, Shoichi: *See—*
 Inamoto, Hiroshi; Sobajima, Katsunobu; and Miyoshi, Shoichi, 4,373,826, Cl. 403-14.000.
Moates, Roger D., to Westinghouse Electric Corp. Matrix encoder for resistive sensor arrays. 4,374,384, Cl. 340-870.380.
Moatti, Georges. Hydraulic engine. 4,373,425, Cl. 91-227.000.
Mobay Chemical Corporation: *See—*
 Sivaramakrishnan, Parameswar, 4,374,226, Cl. 524-399.000.
Mobil Oil Corporation: *See—*
 Chu, Chin-Chiun, 4,374,045, Cl. 252-455.00Z.
 Chu, Chin-Chiun, 4,374,294, Cl. 585-466.000.
 Dellinger, Thomas B.; and Kelly, John, Jr., 4,373,592, Cl. 175-61.000.
 Fitch, John L.; and Mullins, Lynn D., 4,373,585, Cl. 166-263.000.
 Gemmill, Robert M.; and Horodysky, Andrew G., 4,374,032, Cl. 252-49.600.
 Haag, Werner O.; and Lago, Rudolph M., 4,374,296, Cl. 585-739.000.
 Hunt, William C., III, 4,373,586, Cl. 166-263.000.
 Klosek, John M.; and Wu, Margaret M., 4,374,297, Cl. 585-868.000.
 Lee, Carol S., 4,374,295, Cl. 585-640.000.
 Rollmann, Louis D.; and Valyocsik, Ernest W., 4,374,093, Cl. 422-202.000.
Mochizuki, Manabu: *See—*
 Kamiyama, Shin-ichi; Ohshima, Kiyoshi; Mochizuki, Manabu; Kato, Kazuyuki; and Saito, Takeshi, 4,373,800, Cl. 355-10.000.
Modern Home Products Corp.: *See—*
 Koziol, Walter, 4,373,505, Cl. 126-39.00E.
Modine Manufacturing Company: *See—*
 Saperstein, Zalman P.; El-Bourini, Refki M.; and Munch, John E., Jr., 4,373,578, Cl. 165-141.000.
 Schey, John A., 4,373,369, Cl. 72-347.000.
Moehlenpah Industries, Inc.: *See—*
 Matlock, Gordon E.; and Hornkohl, Owen T., 4,373,652, Cl. 227-10.000.
Mohacsi, Ernest, to Hoffmann-La Roche Inc. Levorotatory N-substituted acylmorphinans useful as analgesic agents. 4,374,139, Cl. 424-260.000.
Mohrbach, Hans, to Ernst Mohrbach KG. Punch press apparatus for placement and alignment of a knife holder. 4,373,413, Cl. 83-123.000.
Molders, Werner, to Stabilus GmbH. Construction including a gas spring. 4,373,707, Cl. 267-64.120.
Molins, Desmond W.; Hinchcliffe, Dennis; Heybourn, Frank; and Coyte, Raymond G., to Molins Limited. Cigarette conveyor systems. 4,373,624, Cl. 198-347.000.
Molins Limited: *See—*
 Molins, Desmond W.; Hinchcliffe, Dennis; Heybourn, Frank; and Coyte, Raymond G., 4,373,624, Cl. 198-347.000.
Monroe, John E., to Displaymor Manufacturing Company, Inc. Dual refrigerated display cabinet. 4,373,355, Cl. 62-256.000.
Monsanto Company: *See—*
 Cohen, Saul M.; and LeBlanc, John R., 4,374,240, Cl. 528-230.000.
Montedison S.p.A.: *See—*
 Basile, Giampiero; Boero, Giancarlo; Ceresa, Emiliano M.; and Montino, Franco, 4,374,118, Cl. 423-607.000.
Monteillet, Denis, to Societe Anonyme de Recherches de Mecanique Appliquee. Connecting rod or similar object having a hollow body. 4,373,832, Cl. 403-374.000.
Montino, Franco: *See—*
 Basile, Giampiero; Boero, Giancarlo; Ceresa, Emiliano M.; and Montino, Franco, 4,374,118, Cl. 423-607.000.
Moore, L. Dow: *See—*
 Hsu, Ed C.; Moore, L. Dow; and Temple, Chester S., 4,374,177, Cl. 428-392.000.
Moore, Ronald D., to Chivas Products, Limited. Fastening system for assist straps and the like. 4,373,229, Cl. 16-125.000.
Moore, Wildey J. Gas operated mechanism having automatic pressure regulator. 4,373,423, Cl. 89-191.00A.
Moran, Daniel B.; and Albright, Jay D., to American Cyanamid Company. [4R]-3-(ω-Aroylpropionyl)-4-thiazolidinecarboxylic acids and esters. 4,374,249, Cl. 548-201.000.
Moretti, Mario D.: *See—*
 Messina, Giuseppe; Moretti, Mario D.; and Lorenzoni, Loreno, 4,374,279, Cl. 568-558.000.
 Messina, Giuseppe; Moretti, Mario D.; and Lorenzoni, Loreno, 4,374,280, Cl. 568-558.000.
Morgan, Morris H.: *See—*
 Jones, Thomas B.; Morgan, Morris H.; and Dietz, Peter W., 4,373,272, Cl. 34-57.00A.
Morgan, Raleigh E. Solar collector. 4,373,515, Cl. 126-438.000.
Morimoto, Yoshio: *See—*
 Yuasa, Teruo; Yamazaki, Noboru; and Morimoto, Yoshio, 4,374,272, Cl. 564-315.000.
Morishige, Morio, to Casio Computer Co., Ltd. Electronic timepiece generating different alarm sounds for respective different regions. 4,373,821, Cl. 368-21.000.
Morishita, Hirosada: *See—*
 Mukoh, Akio; Morishita, Hirosada; Anzai, Masayasu; Tokunaga, Kazuyoshi; and Kikuchi, Yasuo, 4,374,191, Cl. 430-100.000.
Morishita, Teru; Ishioka, Yoshimichi; and Suzuki, Toshikazu, to Toyota Jidosha Kogyo Kabushiki Kaisha. Rotary type electrostatic spray painting device. 4,373,672, Cl. 239-703.000.
Morishita, Teru; Sugiyama, Matuyosi; Sato, Akira; and Suzuki, Toshikazu, to Toyota Jidosha Kogyo Kabushiki Kaisha. Rotary type electrostatic spray painting device. 4,373,673, Cl. 239-703.000.
Morita, Masayasu: *See—*
 Masuda, Teruo; Morita, Masayasu; Yamaguchi, Kazuyuki; and Harada, Yoshikazu, 4,373,516, Cl. 128-57.000.
Moriya, Takeo; and Yamagata, Toshio, to Kimoto & Co., Ltd. Photosensitive material and process for developing the same. 4,374,193, Cl. 430-149.000.
Morooka, Yasuo: *See—*
 Tanimoto, Sunao; Tanifuji, Shinya; and Morooka, Yasuo, 4,373,364, Cl. 72-8.000.
Morris, Anthony F.: *See—*
 Naf, Regula; Pickenhagen, Wilhelm; and Morris, Anthony F., 4,374,051, Cl. 252-522.00R.
Morrow, George W., Jr.: *See—*
 Stricklin, Hazel R.; and Morrow, George W., Jr., 4,374,174, Cl. 428-341.000.
Morsbach, Martin; Stecher, Friedhelm; and Stocker, Eberhard, to Goetze AG. Soft material sealing disc used as head gasket. 4,373,735, Cl. 277-235.00B.
Mortoly, John L., to James L. Taylor Mfg. Co. Liquid adhesive applicator. 4,374,165, Cl. 427-430.100.
Morvue, Inc.: *See—*
 Laib, Donald L., 4,373,816, Cl. 356-375.000.
Motorola, Inc.: *See—*
 Darnell, Robert D.; and Ingle, William M., 4,374,110, Cl. 423-342.000.
 McGinn, Michael, 4,374,366, Cl. 331-111.000.
 Olesin, Andrew; Luke, Kevin K. L.; and Lee, Robert D., 4,374,357, Cl. 323-351.000.
 Popovski, George N.; and Vizmuller, Peter, 4,374,370, Cl. 333-202.000.
Motorpal Jihlava, narodni podnik: *See—*
 Mateja, Ludvik; and Chaloupka, Zdenek, 4,374,313, Cl. 219-69.00E.
Motoyama, Masanori: *See—*
 Okahashi, Keiji; Motoyama, Masanori; and Furukawa, Satoru, 4,374,311, Cl. 200-269.000.
Motsch, Hans, to Wurttembergishche Metallwarenfabrik. Process for mounting components with surface junctions to printed-circuit boards. 4,373,259, Cl. 29-840.000.
Motter Printing Press Co.: *See—*
 Loebach, Michael H., 4,373,713, Cl. 271-303.000.
Mowles, Donald L.; Middaugh, James F.; Rutnarak, Sangvorn; and Genese, Joseph N., to Abbott Laboratories. Apparatus for pressurizing an additive transfer device. 4,373,559, Cl. 141-18.000.
Moy, Francis L.: *See—*
 Hiltz, Arnold A.; and Moy, Francis L., 4,374,081, Cl. 264-102.000.
Mroz, Krzysztof: *See—*
 Skalmierski, Bogdan; and Mroz, Krzysztof, 4,373,980, Cl. 156-160.000.
Mubarakshin, Gadylsha M.: *See—*
 Alexandrov, Sasho P.; Mubarakshin, Gadylsha M.; Volf, Leonard A.; and Burinsky, Stanislav V., 4,374,204, Cl. 521-28.000.
Mueller, Dale A., to Honeywell Inc. Heat pump system adaptive defrost control system. 4,373,349, Cl. 62-156.000.
Mukoh, Akio; Morishita, Hirosada; Anzai, Masayasu; Tokunaga, Kazuyoshi; and Kikuchi, Yasuo, to Hitachi, Ltd.; and Hitachi Koki Co., Ltd. Dry reversal developer for electrostatic photography and electrostatic photographic method using the same. 4,374,191, Cl. 430-100.000.
Mules, Robert S., to Fram Europe Limited. Filters. 4,373,635, Cl. 206-525.000.
Muller, Josef, to Balzer & Droll, KG. Process and device for forming the winding cores of stators or rotors of electric machines. 4,373,257, Cl. 29-736.000.
Muller, Rolf, to Papst Motoren KG. Brushless d-c motor system. 4,374,347, Cl. 318-138.000.
Muller, Werner C.: *See—*
 Miller, Franklyn D.; and Muller, Werner C., 4,374,198, Cl. 435-162.000.

Mullins, Lynn D.: *See*—
Fitch, John L.; and Mullins, Lynn D., 4,373,585, Cl. 166-263.000.
Munch, John E., Jr.: *See*—
Saperstein, Zalman P.; El-Bourini, Refki M.; and Munch, John E., Jr., 4,373,578, Cl. 165-141.000.
Murase, Shigemitsu: *See*—
Kudo, Kazushige; Yamamoto, Shigeo; and Murase, Shigemitsu, 4,374,031, Cl. 252-8.800.
Murata Manufacturing Co., Ltd.: *See*—
Sakamoto, Yukio; Tanaka, Tetsuo; Kuboto, Masaaki; and Sugitani, Masami, 4,374,369, Cl. 333-182.000.
Murbach, Warren J.: *See*—
Heller, Carl A.; and Murbach, Warren J., 4,374,189, Cl. 430-2.000.
Murray, Pat L.: *See*—
Ewen, James H.; McClellan, Thomas R.; McMillin, Michael H.; and Murray, Pat L., 4,374,210, Cl. 521-159.000.
Musashi Seimitsu Kogyo Kabushiki Kaisha: *See*—
Nemoto, Akira, 4,373,876, Cl. 417-534.000.
Muscatine Lighting Mfg. Co., Inc.: *See*—
Drost, Jim L.; and Gordin, Myron K., 4,374,407, Cl. 362-432.000.
Mutschele, Hans-Ulrich: *See*—
Kemmner, Ulrich; Ringwald, Peter; Mutschele, Hans-Ulrich; and Schillinger, Rainer, 4,373,872, Cl. 417-312.000.
Myrick, Edward E. Single line deep-sea bucket and release. 4,373,278, Cl. 37-71.000.
Nabisco Brands, Inc.: *See*—
Stroz, John J.; and Mackay, Donald A. M., 4,374,122, Cl. 424-48.000.
Nadherny, Rudolph E.: *See*—
Adler, Franklin P.; and Nadherny, Rudolph E., 4,373,841, Cl. 410-34.000.
Naefe, Gerhard: *See*—
Borburgh, Jacques; Naefe, Gerhard; and Rost, Helmut, 4,373,395, Cl. 73-607.000.
Naf, Regula; Pickenhagen, Wilhelm; and Morris, Anthony F., to Firmenich SA. Utilization of nitrogen containing heterocyclic derivatives as perfume ingredients. 4,374,051, Cl. 252-522.00R.
Nagamoto, Shunichi, to Matsushita Electric Industrial Co., Ltd. Sensor control circuit. 4,373,392, Cl. 73-336.500.
Naito, Hideshi: *See*—
Nozawa, Hideyo; Naito, Hideshi; and Kazami, Kazuyuki, 4,373,792, Cl. 354-33.000.
Naito, Katsumi, to Nissan Motor Co., Ltd.; and NSK-Warnar K.K. Belt retractor. 4,373,684, Cl. 242-107.600.
Nakajima, Motoki: *See*—
Fujikura, Yoshiaki; Inamoto, Yoshiaki; Takaishi, Naotake; and Nakajima, Motoki, 4,374,052, Cl. 252-522.00R.
Nakajima, Yoshihiro: *See*—
Bandai, Shinji; Kajimaki, Masao; Nakajima, Yoshihiro; Yagi, Akira; and Nishimura, Haruo, 4,373,224, Cl. 15-1.50A.
Nakajima, Yoshio: *See*—
Matsuura, Tsuyoshi; Fujiwara, Hiroshi; Aihara, Mamoru; Takahashi, Yutaka; and Nakajima, Yoshio, 4,373,796, Cl. 354-173.000.
Nakamura, Masakazu, to Sumitomo Precision Products Co. Ltd. Method of forming reinforced plate-type heat exchanger. 4,373,243, Cl. 29-157.30D.
Nakamura, Yoshimitsu, to Matsushita Electric Works, Ltd. Method of making rotor coil of coreless motor. 4,373,256, Cl. 29-598.000.
Nakanishi, Seiki: *See*—
Matsumura, Kazuaki; and Nakanishi, Seiki, 4,373,260, Cl. 29-840.000.
Nakaso, Yasuji; Tanaka, Kyoji; and Kawamoto, Hiromi, to Central Glass Company, Limited. Process of preparing alkali monofluorophosphate. 4,374,108, Cl. 423-301.000.
Nakazeki, Tsugito: *See*—
Kimata, Kei; and Nakazeki, Tsugito, 4,373,490, Cl. 123-452.000.
Nalco Chemical Company: *See*—
Connelly, Lawrence J.; Kane, James; and Shields, R. James, 4,374,102, Cl. 423-206.00T.
Nalepa, Roger A.; and Casale, Michael A., to Hewlett-Packard Company. Mass flow/pressure control system. 4,373,549, Cl. 137-487.500.
Nanba, Mitsuo; Ogirima, Masahiko; Kozuka, Hirotsugu; and Shintani, Akira, to Hitachi, Ltd. Method of diffusing an impurity. 4,373,975, Cl. 148-189.000.
Nanometrics Incorporated: *See*—
Coates, Vincent J., 4,373,817, Cl. 356-384.000.
Narancic, Vojislav, to Kearney-National, Inc. Cadmium electric fuse. 4,374,371, Cl. 337-159.000.
Narato, Kiyoshi; Ohtsuka, Keizo; and Niwa, Sadahiko, to Hitachi, Ltd. Method and apparatus for diagnosing overheating of an electric machine. 4,373,376, Cl. 73-23.100.
Nash, Edgar M., Jr. Water-tight rigid structural panel. 4,373,313, Cl. 52-397.000.
Natansohn, Samuel; and Czupryna, Gary, to GTE Laboratories Incorporated. Process for separating tungsten from coinage metals. 4,374,008, Cl. 204-109.000.
Nathan, Bernard D.; and Witter, Donald R., to General Electric Company. Method for fabricating a transverse magnetic printing head. 4,374,005, Cl. 204-15.000.
National Distillers & Chemical Corp.: *See*—
Miller, Franklyn D.; and Muller, Werner C., 4,374,198, Cl. 435-162.000.
National Semiconductor Corporation: *See*—
Khadder, Wadie N.; Wang, Jia-Tarng; and Solomon, James E., 4,373,253, Cl. 29-576.00B.
Navi, Menashe: *See*—
Matalia, Harshad D.; and Navi, Menashe, 4,373,443, Cl. 101-221.000.
NCR Corporation: *See*—
Smigelski, Thomas S., 4,373,965, Cl. 148-1.500.
Neat Nap, Inc.: *See*—
Pelura, Carme D., 4,373,292, Cl. 46-153.000.
Negishi, Hideo; Goto, Kaoru; and Takaya, Sueji, to Mitsubishi Kinzoku Kabushiki Kaisha. Drill bit. 4,373,839, Cl. 408-59.000.
NEHA International: *See*—
Holland, Larry D., 4,374,097, Cl. 423-22.000.
Neichi, Yutaka: *See*—
Oshima, Mitsuaki; Neichi, Yutaka; Iga, Atsushi; and Wada, Ryoichi, 4,374,403, Cl. 360-113.000.
Neissel, John P.: *See*—
Terhune, James H.; Sturtz, John P.; and Neissel, John P., 4,373,375, Cl. 73-19.000.
Neitzel, Emery W.; and Schumacher, Jerome A., to Greenheck Fan Corporation. High efficiency ventilation system. 4,373,509, Cl. 126-299.00D.
Nell, David J.: *See*—
Marquess, Gerald E.; and Nell, David J., 4,374,092, Cl. 422-199.000.
Nelson, Carl D., to J. I. Case Company. Automatic crab steering. 4,373,603, Cl. 180-236.000.
Nelson Industries, Inc.: *See*—
Jaisinghani, Rajan A., 4,374,029, Cl. 210-671.000.
Nelson, John F.: *See*—
Bettini, John E.; and Nelson, John F., 4,373,842, Cl. 411-377.000.
Nelson, Kathleen J.: *See*—
Cole, Bruce A.; Levine, Harold I.; McGuire, Michael T.; Nelson, Kathleen J.; and Slade, Louise, 4,374,154, Cl. 426-565.000.
Nelson, Norman A., to Putch, Samuel, a part interest. Well casing hanger assembly. 4,373,752, Cl. 285-141.000.
Nelson, Ronald C.; and Merrick, Richard L., Jr., to Fidelity Electronics, Ltd. Electronic bridge game system. 4,373,719, Cl. 273-1.00E.
Nemoto, Akira, to Musashi Seimitsu Kogyo Kabushiki Kaisha. Double-acting piston compressor. 4,373,876, Cl. 417-534.000.
Neuhalfen, Michael A., to General Motors Corporation. Internal combustion engine electronic ignition system. 4,373,488, Cl. 123-418.000.
New Nippon Electric Company, Ltd.: *See*—
Matsumura, Kazuaki; and Nakanishi, Seiki, 4,373,260, Cl. 29-840.000.
Newall Engineering Company Limited, The: *See*—
Parnum, John D.; and Barber, Nigel T., 4,373,301, Cl. 51-281.00C.
Newell, Gerald P., to Helene Curtis Industries, Inc. Hair moisturizing compositions. 4,374,125, Cl. 424-70.000.
Newman, Raymond J.: *See*—
March, Edward J.; and Newman, Raymond J., 4,373,658, Cl. 228-242.000.
Ng, Henry H.; and Schmidt, Frederick R., to Interaction Systems, Inc. Touch terminal with reliable pad selection. 4,374,381, Cl. 340-711.000.
Nguyen, Dung D.: *See*—
Zwick, Eugene B.; Nguyen, Dung D.; Brigham, William D.; and Hoffman, Kenneth, 4,373,896, Cl. 431-9.000.
Nicholas, Mark L.: *See*—
Blum, Patricia R.; and Nicholas, Mark L., 4,374,043, Cl. 252-435.000.
Nichols, Gary R.; and Kozlowski, John J., Jr., to Magnavox Government and Industrial Electronics Company. Rotational position and velocity sensing apparatus. 4,373,486, Cl. 123-414.000.
Nilsson, Claes T.: *See*—
Jakobsen, Kjell M.; and Nilsson, Claes T., 4,374,166, Cl. 428-35.000.
Ninomiya, Joko. Waistline supportable dispenser for martial arts "shurikens" throwing stars. 4,373,649, Cl. 224-163.000.
Nippon Electric Co., Ltd.: *See*—
Tsuchiya, Takuichi; and Togo, Hiroshi, 4,374,346, Cl. 315-276.000.
Nippon Gakki Seizo Kabushiki Kaisha: *See*—
Endo, Akinori; and Kato, Hirokazu, 4,373,416, Cl. 84-1.010.
Nippon Kogaku K.K.: *See*—
Nozawa, Hideyo; Naito, Hideshi; and Kazami, Kazuyuki, 4,373,792, Cl. 354-33.000.
Ohtsubo, Yoshiaki, 4,373,790, Cl. 354-24.000.
Nippon Kokan Kabushiki Kaisha: *See*—
Date, Takasaburo; Maki, Toshimichi; Iguchi, Mitsuya; Iwamaru, Sumifusa; and Watanabe, Hisashi, 4,373,911, Cl. 432-152.000.
Kajikawa, Shuji; Kanai, Kazuo; and Ito, Haruo, 4,373,907, Cl. 432-83.000.
Ouchi, Chiaki; and Kohsaka, Yohji, 4,373,951, Cl. 75-123.00N.
Taira, Tadaaki; Ishihara, Toshio; and Takehara, Junichiro, 4,373,365, Cl. 72-52.000.
Nippon Oil Company, Ltd.: *See*—
Yuasa, Hitoshi; and Imai, Hirosuke, 4,374,243, Cl. 528-422.000.
Nippon Soken, Inc.: *See*—
Kitamura, Sotoo; Akita, Sigeyuki; and Kitagawa, Junji, 4,373,388, Cl. 73-301.000.
Tanaka, Taro; Sasaya, Hideaki; and Inagaki, Mitsuo, 4,373,880, Cl. 418-150.000.
Yamamoto, Shinichi; and Ito, Toshihiko, 4,373,895, Cl. 425-461.000.
Nippon Steel Corporation: *See*—
Sawatani, Tadashi; Ishii, Mitsuo; and Yoshimura, Hirofumi, 4,373,971, Cl. 148-12.0EA.
Nishikawa, Yukio: *See*—
Fukahori, Kiyoshi; and Nishikawa, Yukio, 4,374,335, Cl. 307-521.000.

Nishimura, Haruo: *See*—
Bandai, Shinji; Kajimaki, Masao; Nakajima, Yoshihiro; Yagi, Akira; and Nishimura, Haruo, 4,373,224, Cl. 15-1.50A.
Nishimura, Yutaka; Kuroiwa, Hiroshi; Kirisawa, Tadashi; and Oyama, Yoshishige, to Hitachi, Ltd. Air flow meter. 4,373,387, Cl. 73-204.000.
Nishioka, Gary J. Bristle structure for brushes and brush assembly. 4,373,541, Cl. 132-84.00R.
Nissan Motor Company, Limited: *See*—
Fujishiro, Takeshi; Takeuchi, Kiyoshi; and Kita, Toru, 4,373,378, Cl. 73-35.000.
Hayashi, Yoshimasa, 4,373,485, Cl. 123-340.000.
Inamoto, Hiroshi; Sobajima, Katsunobu; and Miyoshi, Shoichi, 4,373,826, Cl. 403-14.000.
Kato, Shinichi; Tsuda, Hiroshi; Yamaki, Kiyoshi; Suzuki, Tadashi; and Kuwano, Fumiyoshi, 4,374,310, Cl. 200-61.540.
Kuribayashi, Yasushi, 4,373,335, Cl. 60-602.000.
Matsuno, Yoshio, 4,373,745, Cl. 280-752.000.
Miki, Hiroyuki; and Matsuoka, Hideoki, 4,373,749, Cl. 280-807.000.
Naito, Katsumi, 4,373,684, Cl. 242-107.600.
Okuyama, Hiroo, 4,373,746, Cl. 280-752.000.
Shimura, Kiichiro; Tamura, Takeo; Kido, Takayoshi; Hara, Hiroshi; and Tanaka, Morimasa, 4,374,348, Cl. 318-443.000.
Ushimura, Shoji, 4,373,498, Cl. 123-571.000.
Yamaguchi, Hiroshi, 4,373,489, Cl. 123-422.000.
Nitney Corporation: *See*—
Lang, Franklin D., 4,373,843, Cl. 412-10.000.
Nitz, Larry T., to General Motors Corporation. Solid state compass. 4,373,271, Cl. 33-361.000.
Niwa, Sadahiko: *See*—
Narato, Kiyoshi; Ohtsuka, Keizo; and Niwa, Sadahiko, 4,373,376, Cl. 73-23.100.
Nobbe, Volker: *See*—
Schepers, Bernhard; Nobbe, Volker; Schroder, Bernd; Borer, Werner; and Kullack, Manfred, 4,374,119, Cl. 423-625.000.
Noggle, Donald E.: *See*—
Kulp, Leon; and Noggle, Donald E., 4,373,381, Cl. 73-40.50R.
Nolan Systems, Inc.: *See*—
Hansen, Kenneth H.; and Conover, Louis S., Jr., 4,373,710, Cl. 270-55.000.
Noland, Joseph R., to General Electric Company. Heat pump control/-defrost circuit. 4,373,350, Cl. 62-156.000.
Nonomura, Keisaku; Takamatsu, Toshiaki; Uede, Hisashi; and Wada, Tomio, to Sharp Kabushiki Kaisha. Electrode structure on a matrix type liquid crystal panel. 4,373,784, Cl. 350-336.000.
Norcros Investments Limited: *See*—
Cunnington, Harry, 4,373,444, Cl. 101-228.000.
Nordmann, Joseph. Apparatus for preparing bread dough. 4,373,892, Cl. 425-207.000.
North American Philips Consumer Electronics Corp.: *See*—
Say, Donald L., 4,374,341, Cl. 313-414.000.
Say, Donald L., 4,374,342, Cl. 313-414.000.
Northcraft, Richard D. Adjustable means for supporting combustible material. 4,373,508, Cl. 126-298.000.
Northern Telecom Limited: *See*—
Purdy, Michael L., 4,373,776, Cl. 350-96.200.
Salama, Amir, 4,374,004, Cl. 204-15.000.
Norwich Eaton Pharmaceuticals, Inc.: *See*—
Wright, George C.; and White, Ronald E., 4,374,246, Cl. 546-156.000.
Norwood Marking & Equipment Co., Inc.: *See*—
Shenoha, James L., 4,373,436, Cl. 101-27.000.
Nouguier, Robert: *See*—
Maldonado, Paul; Nouguier, Robert; Fayard, Jean-Claude; and Leger, Robert, 4,374,282, Cl. 568-672.000.
Novak, Robert W.: *See*—
Trenbeath, Steven L.; Novak, Robert W.; and Feldman, Allan M., 4,374,107, Cl. 423-265.000.
Nozawa, Hideyo; Naito, Hideshi; and Kazami, Kazuyuki, to Nippon Kogaku K.K. Flashlight photographing device. 4,373,792, Cl. 354-33.000.
NSK-Warnar K.K.: *See*—
Naito, Katsumi, 4,373,684, Cl. 242-107.600.
NSK-Warner K.K.: *See*—
Ikesue, Haruyuki, 4,373,830, Cl. 403-284.000.
NTN Toyo Bearing Company, Limited: *See*—
Kimata, Kei; and Nakazeki, Tsugito, 4,373,490, Cl. 123-452.000.
Nussdorf, Jeffrey M.; and McMillan, John C. Portable fabric display booth assembly. 4,373,570, Cl. 160-352.000.
Nutt, Ruth F., to Merck & Co., Inc. Process for the preparation of cyclic hexapeptide. 4,374,060, Cl. 260-112.50R.
N.V. Philips' Gloeilampenfabrieken: *See*—
Vogten, Leonardus L. M.; and Willems, Leonardus F., 4,374,302, Cl. 179-1.0SM.
Obara, Sanshiro; and Miyashita, Ikuro, to Hitachi, Ltd. Method and apparatus for detecting defects in a water cooling system of a hydrogen-cooled dynamic electric machine. 4,373,379, Cl. 73-40.50R.
Occidental Chemical Corporation: *See*—
Fifolt, Michael J.; and Foster, Arthur M., 4,374,266, Cl. 562-456.000.
Fifolt, Michael J.; and Foster, Arthur M., 4,374,267, Cl. 562-456.000.
Occidental Research Corporation: *See*—
Dines, Martin B.; and DiGiacomo, Peter M., 4,374,242, Cl. 528-395.000.
Lee, Chang-Kuei, 4,373,994, Cl. 201-22.000.
Tipton, Ann B.; and Crosby, Alan C., 4,374,106, Cl. 423-231.000.
Ogawa, Hiroshi; Sato, Kazuhiro; Shibata, Norio; Oguri, Katsuhiko; Utida, Masayoshi; and Ono, Tsuyoshi, to Victor Company of Japan, Ltd. Stereo pickup with printed circuit coils mounted in a linear field. 4,374,433, Cl. 369-136.000.
Ogilvie, Jim W. Travel game. 4,373,732, Cl. 273-271.000.
Ogirima, Masahiko: *See*—
Nanba, Mitsuo; Ogirima, Masahiko; Kozuka, Hirotsugu; and Shintani, Akira, 4,373,975, Cl. 148-189.000.
Ogle, Peter C.: *See*—
Ferris, Donald L.; and Ogle, Peter C., 4,373,862, Cl. 416-61.000.
Oguri, Katsuhiko: *See*—
Ogawa, Hiroshi; Sato, Kazuhiro; Shibata, Norio; Oguri, Katsuhiko; Utida, Masayoshi; and Ono, Tsuyoshi, 4,374,433, Cl. 369-136.000.
Ohara, Saburo: *See*—
Aoki, Kiyoshi; and Ohara, Saburo, 4,374,176, Cl. 428-392.000.
Ohkubo, Toyokazu: *See*—
Iio, Toshimasa; and Ohkubo, Toyokazu, 4,374,098, Cl. 423-27.000.
Ohshima, Kiyoshi: *See*—
Kamiyama, Shin-ichi; Ohshima, Kiyoshi; Mochizuki, Manabu; Kato, Kazuyuki; and Saito, Takeshi, 4,373,800, Cl. 355-10.000.
Ohta, Tokuya: *See*—
Eida, Tsuyoshi; Yano, Yasuhiro; Matsufuji, Yohji; Haruta, Masahiro; and Ohta, Tokuya, 4,373,954, Cl. 106-20.000.
Ohtsubo, Yoshiaki, to Nippon Kogaku K.K. Camera having a flashlight photography recommendation device. 4,373,790, Cl. 354-24.000.
Ohtsuka, Keizo: *See*—
Narato, Kiyoshi; Ohtsuka, Keizo; and Niwa, Sadahiko, 4,373,376, Cl. 73-23.100.
Okahashi, Keiji; Motoyama, Masanori; and Furukawa, Satoru, to Matsushita Electric Works, Ltd. Electrical multilayer contact. 4,374,311, Cl. 200-269.000.
O'Keefe, Patrick J., Jr.; and Weissler, Harold E., II, to Bendix Corporation, The. Automatic speed control for heavy vehicles. 4,374,422, Cl. 364-426.000.
Okubo, Kiyokazu, to Honda Giken Kogyo Kabushiki Kaisha. Clutch mechanism for power transmission system. 4,373,407, Cl. 74-650.000.
Okuyama, Hiroo, to Nissan Motor Company, Limited. Leg protector for passenger in vehicle. 4,373,746, Cl. 280-752.000.
Olashaw, William F.; and Postlethwait, James H., to General Electric Company. Insulating-isolating barrier system for electrical distribution equipment buswork. 4,374,405, Cl. 361-355.000.
Olesin, Andrew; Luke, Kevin K. L.; and Lee, Robert D., to Motorola, Inc. Switched capacitor precision current source. 4,374,357, Cl. 323-351.000.
Oliff, James R., to Mead Corporation, The. Wraparound article carrier with adjustable girth. 4,373,630, Cl. 206-434.000.
Olin Corporation: *See*—
Yarwood, John C.; Gaule, Gerhart K.; and Ungarean, Gary L., 4,373,571, Cl. 164-467.000.
Olivierse, Jan; and van Es, Machiel A. H., to Hoogovens IJmuiden B.V. Packing line for packing stacks of rectangular tinplate sheets on pallets. 4,373,320, Cl. 53-589.000.
Olsen, Alf J., to Xerox Corporation. Ribbon tension and metering control. 4,373,824, Cl. 400-234.000.
Olsen, Ronald H., to Microlife Technics, Inc. Broad host range small plasmid rings as cloning vehicles. 4,374,200, Cl. 435-172.000.
Olson, Gene E.; Thompson, Jerome A.; Grover, Donald D.; Stout, Christopher B.; Becker, Thomas P.; and Kaufman, Glenn A., to Snap-on Tools Corporation. Diesel engine timing apparatus. 4,373,384, Cl. 73-119.00A.
Olympia Werke AG: *See*—
Van Raamsdonk, Cornelis; and Wartusch, Johann, 4,374,223, Cl. 524-245.000.
Olympus Optical Company Ltd.: *See*—
Matsuura, Tsuyoshi; Fujiwara, Hiroshi; Aihara, Mamoru; Takahashi, Yutaka; and Nakajima, Yoshio, 4,373,796, Cl. 354-173.000.
Shimizu, Tokuo, 4,374,336, Cl. 310-154.000.
Takayama, Syuichi, 4,374,345, Cl. 315-241.00P.
Takekawa, Hiroshi, 4,373,931, Cl. 436-539.000.
Onda, Takanori; Kawasaki, Hiroshi; and Misawa, Mitsukuni, to Honda Giken Kogyo Kabushiki Kaisha. Power transmission device of motorcycles. 4,373,601, Cl. 180-226.000.
Ono, Chikai; and Toyoda, Kazuhiro, to Fujitsu Limited. I^2L Semiconductor memory circuit device. 4,374,431, Cl. 365-174.000.
Ono, Tsuyoshi: *See*—
Ogawa, Hiroshi; Sato, Kazuhiro; Shibata, Norio; Oguri, Katsuhiko; Utida, Masayoshi; and Ono, Tsuyoshi, 4,374,433, Cl. 369-136.000.
Ootsuka, Ryotatsu: *See*—
Shingu, Hideo; Arai, Kozo; and Ootsuka, Ryotatsu, 4,373,950, Cl. 75-68.00R.
Opalka, Chester J., Jr.: *See*—
Lesher, George Y.; Opalka, Chester J., Jr.; and Page, Donald F., 4,374,141, Cl. 424-266.000.
Opheij, Willem G.: *See*—
Van Rosmalen, Gerard E.; and Opheij, Willem G., 4,374,324, Cl. 250-201.000.
Optical Coating Laboratory, Inc.: *See*—
Thelen, Alfred J., 4,373,782, Cl. 350-166.000.
Orionov, Jury E.: *See*—
Anisimov, Veniamin M.; Belov, Valentin V.; Verkevich, Vsevolod I.; and Orionov, Jury E., 4,373,698, Cl. 251-26.000.
Orlando, Michael D.; and Riley, Jean M., to United States of America, Army. Process for coating a dry variola virus. 4,374,201, Cl. 435-239.000.

Osaka Municipal Government: *See—*
Hirashima, Tsuneaki; and Miyata, Toshiyuki, 4,374,250, Cl. 548-305.000.
Osawa, Yasuko; and Uchikuga, Saburo, to Sogo Pharmaceutical Co., Ltd. Process for preparing 2,2-disubstituted thiazolidines. 4,374,247, Cl. 548-146.000.
Oscar Lucks Company: *See—*
Allen, Beverly J., 4,373,430, Cl. 99-468.000.
Oshima, Mitsuaki; Neichi, Yutaka; Iga, Atsushi; and Wada, Ryoichi, to Matsushita Electric Industrial Co., Ltd. Magnetic recording and reproducing system. 4,374,403, Cl. 360-113.000.
Ota, Naoto: *See—*
Kohzai, Yoshinori; Fujioka, Yoshiki; and Ota, Naoto, 4,374,350, Cl. 318-590.000.
Otis Engineering Corporation: *See—*
Waters, Fleming A., 4,373,583, Cl. 166-113.000.
Ott, Granville E.: *See—*
Herrmann, Carlo L.; and Ott, Granville E., 4,374,395, Cl. 358-22.000.
Ouchi, Chiaki; and Kohsaka, Yohji, to Nippon Kokan Kabushiki Kaisha. Nonmagnetic steels having low thermal expansion coefficients and high yield points. 4,373,951, Cl. 75-123.00N.
Ousley, Russell M. Sundial. 4,373,270, Cl. 33-270.000.
Outboard Marine Corporation: *See—*
Billingsley, Henry C.; and DuBois, Chester G., 4,373,479, Cl. 123-187.50R.
Hall, Charles B.; McBride, Edward D.; and Young, Robert F., 4,373,920, Cl. 440-59.000.
Hall, Charles B.; McBride, Edward D.; and Young, Robert F., 4,373,921, Cl. 440-61.000.
Kirk, J. David, 4,373,475, Cl. 123-59.00B.
Owens-Illinois, Inc.: *See—*
Glick, Frederick J.; and Pedersen, Richard N., 4,373,944, Cl. 65-23.000.
Oyama, Shigeaki: *See—*
Kohzai, Yoshinori; Oyama, Shigeaki; and Koyama, Tatsuo, 4,374,337, Cl. 310-186.000.
Oyama, Yoshishige: *See—*
Nishimura, Yutaka; Kuroiwa, Hiroshi; Kirisawa, Tadashi; and Oyama, Yoshishige, 4,373,387, Cl. 73-204.000.
Pagani, Franco. Exercising device. 4,373,716, Cl. 272-137.000.
Page, Donald F.: *See—*
Lesher, George Y.; Opalka, Chester J., Jr.; and Page, Donald F., 4,374,141, Cl. 424-266.000.
Page, John F.: *See—*
Wilson, Gregg; and Page, John F., 4,373,417, Cl. 84-1.160.
Pallotta, Frank, to DSH. Shelf assembly and bracket therefor. 4,373,448, Cl. 108-29.000.
Pallotta, Stefano. Retroreflectometer giving direct reading. 4,373,819, Cl. 356-445.000.
Palo Alto Medical Research Foundation: *See—*
Hill, Bruce C.; and Stern, Roger A., 4,373,532, Cl. 128-660.000.
Pandzik, Richard T., to General Motors Corporation. Variable capacity positive displacement type compressor. 4,373,870, Cl. 417-269.000.
Pano, Gury: *See—*
Consolazio, George A.; and Pano, Gury, 4,374,063, Cl. 260-118.000.
Papazian, Harry: *See—*
Canale, Ralph D.; Canale, Albert S.; and Papazian, Harry, 4,374,036, Cl. 252-135.000.
Papkov, Vladimir S.: *See—*
Beloglazov, Alexei V.; Beiden, Vladimir E.; Iordan, Georgy G.; Karneev, Vladimir M.; Papkov, Vladimir S.; Stuchebnikov, Vladimir M.; Khasikov, Viktor V.; and Surovikov, Mikhail V., 4,373,399, Cl. 73-777.000.
Papst, Georg F.; Harmsen, Siegfried; and Wrobel, Gunter, to Papst-Motoren KG. Axial-flow fan. 4,373,861, Cl. 415-213.00C.
Papst Motoren KG: *See—*
Muller, Rolf, 4,374,347, Cl. 318-138.000.
Papst, Georg F.; Harmsen, Siegfried; and Wrobel, Gunter, 4,373,861, Cl. 415-213.00C.
Paradyne Corporation: *See—*
Armstrong, Thomas R., 4,374,436, Cl. 371-11.000.
Parent, Edward D., to GTE Products Corporation. Intermetallic composite. 4,373,952, Cl. 75-244.000.
Park, John N.: *See—*
Steigerwald, Robert L.; and Park, John N., 4,374,355, Cl. 320-43.000.
Parker, John L., Jr.; and Ranes, Robert B., to Western Electric Company, Inc. Method of preserving the solderability of copper. 4,373,656, Cl. 228-203.000.
Parker, William R.; and Gosche, Matt J., to Union Special Corporation. Sewing machine loopers. 4,373,460, Cl. 112-162.000.
Parnum, John D.; and Barber, Nigel T., to Newall Engineering Company Limited, The. Cam machining. 4,373,301, Cl. 51-281.00C.
Parsons, Charles F., Jr. Wheel suspension system for vehicles. 4,373,743, Cl. 280-661.000.
Parsons, Ronald S. Double-walled rotary tubular conveyor with stabilizing drive means. 4,373,625, Cl. 198-804.000.
Partridge, Lyle D. Apparatus for collecting particles produced during abrading of precious metals. 4,373,300, Cl. 51-270.000.
Pascuzzi, E. Anthony: *See—*
Corriell, William F.; Vear, John P.; and Pascuzzi, E. Anthony, 4,373,659, Cl. 229-32.000.
Pastor, Stephen D.: *See—*
Spivack, John D.; Dexter, Martin; and Pastor, Stephen D., 4,374,219, Cl. 524-91.000.
Pastorius, W. J.: *See—*
Pryor, Timothy R.; Hockley, Bernard; Liptay-Wagner, Nick; Hageniers, Omer L.; and Pastorius, W. J., 4,373,804, Cl. 356-1.000.
Patient Technology, Inc.: *See—*
Peppel, George W., 4,373,894, Cl. 425-393.000.
Patterson, Richard A., to Minnesota Mining and Manufacturing Company. Bonding devices and methods for bonding tape closures to a container end. 4,373,978, Cl. 156-69.000.
Pauly, Peter D.: *See—*
Stone, Herman; Pauly, Peter D.; and Pcolinsky, Michael P., Jr., 4,374,207, Cl. 521-107.000.
Pcolinsky, Michael P., Jr.: *See—*
Stone, Herman; Pauly, Peter D.; and Pcolinsky, Michael P., Jr., 4,374,207, Cl. 521-107.000.
Pearch, Dean A.; and Pung, Thomas F., Sr., to Dana Corporation. Torque limiting mechanism. 4,373,358, Cl. 464-48.000.
Pearl, David R.: *See—*
Gerber, Heinz J.; and Pearl, David R., 4,373,412, Cl. 83-24.000.
Pedder, Simon J.: *See—*
Greener, Brian; Pedder, Simon J.; and Forknall, John P., 4,373,759, Cl. 308-187.200.
Pedersen, Peder, to Rockwool International A/S. Fibre-reinforced cementitious product. 4,373,957, Cl. 106-93.000.
Pedersen, Richard N.: *See—*
Glick, Frederick J.; and Pedersen, Richard N., 4,373,944, Cl. 65-23.000.
Pell, Kynric M.; and Conard, Robert G., to United States of America, Army. Laser doppler attitude measurement. 4,373,808, Cl. 356-152.000.
Peloquin, Arthur V.; and Qurnell, Frank D., to General Electric Company. Underwater suction device for irradiated materials. 4,374,024, Cl. 210-241.000.
Pelton, John F., to Union Carbide Corporation. Apparatus for refining molten metal. 4,373,704, Cl. 266-225.000.
Pelura, Carme D., to Neat Nap, Inc. Dual character doll. 4,373,292, Cl. 46-153.000.
Pemberton, John A.: *See—*
Pullen, Geoffrey J.; Pemberton, John A.; and Brown, Colin J., 4,373,319, Cl. 53-573.000.
Penelizer Corporation: *See—*
Stone, Eugene M., 4,373,961, Cl. 106-281.00R.
Peng, C. S. Patrick: *See—*
Howell, John R.; and Peng, C. S. Patrick, 4,373,347, Cl. 62-112.000.
Pennertz, Donald W.; and Burkey, Ritchie J., to Alexandria Extrusion Company. Deburring machine. 4,373,297, Cl. 51-84.00R.
Pennwalt Corporation: *See—*
Wright, Danny W., 4,373,942, Cl. 62-12.000.
Peppel, George W., to Patient Technology, Inc. Method and apparatus for making plastic tubes. 4,373,894, Cl. 425-393.000.
Pera, John D.: *See—*
Fenyes, Joseph G. E.; and Pera, John D., 4,374,040, Cl. 252-389.00A.
Perineau, Philippe; and Lebreton, Yves, to Vallourec. Device for rapidly cooling metal tubes. 4,373,703, Cl. 266-131.000.
Perry, Thomas J.: *See—*
Comfort, Joseph A.; Perry, Thomas J.; and Loos, Michel, 4,374,413, Cl. 364-200.000.
Comfort, Joseph A.; Perry, Thomas J.; and Loos, Michel, 4,374,414, Cl. 364-200.000.
Petersen, Ross K., to Medalie Manufacturing Co. Air precleaner for internal combustion engine. 4,373,940, Cl. 55-328.000.
Peterson, Francis C., to Illinois Tool Works Inc. Adjustable shelf support. 4,373,694, Cl. 248-246.000.
Petit, Peter J.; and Hartwig, Walter J., to Allis-Chalmers Corporation. Kiln shell nozzle with annular fluid delivery. 4,373,908, Cl. 432-109.000.
Petit, Peter J.; and Gill, Thomas J., to Allis-Chalmers Corporation. Gas injecting kiln shell nozzle with particle entry barriers. 4,373,909, Cl. 432-109.000.
Petrillo, Edward W., Jr., to E. R. Squibb & Sons, Inc. Amino and substituted amino phosphinyl-alkanoyl compounds. 4,374,131, Cl. 424-200.000.
Petrocci, Alfonso N.: *See—*
Green, Harold A.; Merianos, John J.; and Petrocci, Alfonso N., 4,374,244, Cl. 542-476.000.
Petrovic, John E.; and Trenary, John, to Teledyne Industries, Inc. Rechargeable electric portable appliance. 4,374,354, Cl. 320-2.000.
Pfister, Johann K., to Schweizerische Lokomotiv und Maschinenfabrik. Rail vehicle passenger body. 4,373,447, Cl. 105-399.000.
Pfizer Inc.: *See—*
Belletire, John L., 4,374,148, Cl. 424-317.000.
Scorey, Clive R.; and Smith, Roy A., 4,373,970, Cl. 148-11.50C.
Phaal, Cornelius; and Jurgens, Rainer, to Christensen, Inc. Drill bit. 4,373,593, Cl. 175-329.000.
Phelps, Weldon L., to Caterpillar Tractor Co. Pulse width modulated constant current servo driver. 4,373,697, Cl. 251-129.000.
Philion, Richard E., to Sterling Drug Inc. α-{[(Arylalkyl)amino]alkyl}-4-hydroxy-3-(lower-alkylsulfinyl)benzenemethanols. 4,374,149, Cl. 424-330.000.
Phillips, Albert. Fluid actuated pump system. 4,373,874, Cl. 417-397.000.

Phillips, Arthur P., to Burroughs Wellcome Co. Topical inflammatory pharmaceutical formulations. 4,374,146, Cl. 424-282.000.
Phillips Petroleum Company: *See—*
MacEwen, George E., 4,373,646, Cl. 222-327.000.
Stricklen, Phil M.; and Hogan, John P., 4,374,234, Cl. 526-105.000.
Picavet, Rudolf P. Alternating rotor motor with spring clutches. 4,373,879, Cl. 418-35.000.
Pickenhagen, Wilhelm: *See—*
Naf, Regula; Pickenhagen, Wilhelm; and Morris, Anthony F., 4,374,051, Cl. 252-522.00R.
Pientak, Reinhold: *See—*
Kundler, Walter; Pientak, Reinhold; Schulz, Claus; and Skerka, Wolfgang, 4,374,423, Cl. 364-434.000.
Piesik, Edward T., to General Dynamics, Pomona Division. Combustion suppressor. 4,373,420, Cl. 89-1.812.
Pillard, Inc.: *See—*
Eckelmann, Gunther, 4,373,900, Cl. 431-182.000.
Pillifant, Harold E., Jr. Vehicle warning device. 4,374,376, Cl. 340-84.000.
Piotrowski, Tadeusz W., to Cincinnati Milacron Inc. Full access pallet shuttle guarding. 4,373,406, Cl. 74-613.000.
Pircher, Georges: *See—*
Lacombat, Michel; Pircher, Georges; and LeFevre, Herve, 4,373,814, Cl. 356-350.000.
Piscitelli, R. Amelia; Hemmer, Valentine J.; Fischer, Charles P.; and Shepler, Eric F., to Bendix Corporation, The. Socket type contact assembly. 4,373,773, Cl. 339-262.00R.
Piskorz, Ronald F.: *See—*
Van Der Puy, Michael; and Piskorz, Ronald F., 4,374,289, Cl. 570-168.000.
Pitetti, Raymond C.; and Rutkiewicz, John, to Bell Telephone Laboratories, Incorporated. Fabrication of film circuits having a thick film crossunder and a thin film capacitor. 4,374,159, Cl. 427-96.000.
Pitney Bowes Inc.: *See—*
Foster, Dean H.; and Silverman, Harold, 4,373,711, Cl. 271-171.000.
Pitrolo, Augustine A.; Mei, Joseph S.; and Shang, Jerry Y., to United States of America, Energy. Oil shale retorting and combustion system. 4,373,454, Cl. 110-347.000.
Pittway Corporation: *See—*
Schoenfelder, George A.; Rork, Gerald D.; and Hiltenbrand, Richard E., 4,374,329, Cl. 250-574.000.
Planeta, Mirek, to Workman Bag Company Ltd. Sealed bags of plastic materials. 4,373,979, Cl. 156-73.100.
Plapp, Gunther; and Romann, Peter, to Robert Bosch GmbH. Device for burnoff of a measuring resistor. 4,373,383, Cl. 73-118.000.
Plasticisers, Ltd.: *See—*
Bomers, Joseph J. P.; Ellis, David G.; Jansen, Johann J.; and Bijen, Jan M. J. M., 4,373,981, Cl. 156-164.000.
Platmanufaktur AB: *See—*
Egli, Alwin, 4,373,317, Cl. 53-412.000.
Pletka, Hans-Dieter: *See—*
Bozon, Alfred; Lakatos, Eduard; Koberstein, Edgar; Pletka, Hans-Dieter; and Volker, Herbert, 4,374,047, Cl. 252-472.000.
PLM Aktiebolag: *See—*
Jakobsen, Kjell M.; and Nilsson, Claes T., 4,374,166, Cl. 428-35.000.
Plyler, Robert G.: *See—*
Cross, William E.; and Plyler, Robert G., 4,373,771, Cl. 339-125.00L.
Polge, Jacques, to Commissariat a l'Energie Atomique. Coiling process and apparatus by radially winding a filament. 4,373,680, Cl. 242-7.020.
Polichnowski, Stanley W.: *See—*
Larkins, Thomas H.; Polichnowski, Stanley W.; Tustin, Gerald C.; and Young, David A., 4,374,070, Cl. 260-549.000.
Politechnika Slaska im. Wincentego Pstrowskiego: *See—*
Skalmierski, Bogdan; and Mroz, Krżysztof, 4,373,980, Cl. 156-160.000.
Polk, Darryl R.; and Williams, Errol R., Jr., to International Business Machines Corporation. Capacitive transducer for sensing a home position. 4,374,383, Cl. 340-870.370.
Ponczek, George M., to Stewart-Warner Corporation. Indicating gauge with pressure relief valve. 4,373,398, Cl. 73-738.000.
Ponomarev, Ardalion N.: *See—*
Gorelik, Rudolf A.; Dukhovskoi, Evgeny A.; Kleiman, Alexandr M.; Kleimenov, Nikolai A.; Markevich, Andrei M.; Ponomarev, Ardalion N.; Silin, Askold A.; Skok, Valentina M.; Talroze, Viktor L.; Khomyakov, Anatoly V.; and Lyapunov, Andrei Y., 4,374,180, Cl. 428-421.000.
Ponticello, Gerald S.: *See—*
Baldwin, John J.; Ponticello, Gerald S.; Vickers, Stanley; and Steuerwald, Alfred, 4,374,140, Cl. 424-263.000.
Ponto, Robert; and Martin, Hardison G., to Innovative Electronics, Inc. Sound mixer devices. 4,374,300, Cl. 179-1.0AT.
Popovski, George N.; and Vizmuller, Peter, to Motorola, Inc. Helical resonator filter. 4,374,370, Cl. 333-202.000.
Porlier, Beth W.: *See—*
Zucker, Jerry; and Porlier, Beth W., 4,374,202, Cl. 501-82.000.
Portage Electric Products, Inc.: *See—*
Givler, Omar R., 4,374,372, Cl. 337-380.000.
Porter, Roy A., to Bell Telephone Laboratories, Incorporated. Dry etching aluminum. 4,373,990, Cl. 156-643.000.
Post, Larry K.: *See—*
Culbertson, Billy M.; Post, Larry K.; and Aulabaugh, Ann E., 4,374,235, Cl. 526-262.000.
Postler, Daniel P.: *See—*
Bednar, John M.; Postler, Daniel P.; and Jones, Terry V., 4,373,582, Cl. 166-65.00R.
Postlethwait, James H.: *See—*
Olashaw, William F.; and Postlethwait, James H., 4,374,405, Cl. 361-355.000.
Powderley, John; and Brookes, David J., to USM Corporation. Stacking device for hollow rivets. 4,373,318, Cl. 53-540.000.
Powers, Joseph; Trocciola, John C.; and Martin, Ronald G., to United Technologies Corporation. High temperature, high pressure chemical resistant seal material. 4,374,185, Cl. 429-36.000.
Poznick, Jeffrey B.: *See—*
Douglas, Raymond J.; May, Herbert; Poznick, Jeffrey B.; and Sweet, Roger H., 4,373,289, Cl. 46-1.00R.
PPG Industries, Inc.: *See—*
Gay, Benjamin A., 4,373,650, Cl. 225-97.000.
Hsu, Ed C.; Moore, L. Dow; and Temple, Chester S., 4,374,177, Cl. 428-392.000.
Precision Monolithics, Inc.: *See—*
Fukahori, Kiyoshi; and Nishikawa, Yukio, 4,374,335, Cl. 307-521.000.
Precitronic Gesellschaft fur Feinmechanik und Electronic m.b.H.: *See—*
Decker, Rainer, 4,373,389, Cl. 73-304.00C.
Prendergast, James P. Safety stirrup. 4,373,321, Cl. 54-49.000.
Prengaman, Raymond D.; and Howard, James L., to RSR Corporation. Method of manufacturing electrowinning anode. 4,373,654, Cl. 228-173.00R.
Presby, David W.: *See—*
Grout, Kenneth M.; and Presby, David W., 4,373,285, Cl. 42-90.000.
Previti, Frank R. Balanced impedance coupler. 4,374,363, Cl. 330-263.000.
Primack, Harold S., to Air Resources, Inc. Composition and method for removing hydrogen sulfide from gas stream. 4,374,104, Cl. 423-226.000.
Pringle, Ronald E., to Camco, Incorporated. Fluid displacement well safety valve. 4,373,587, Cl. 166-324.000.
Prismo Universal Limited: *See—*
Kilner, David N., 4,373,670, Cl. 239-172.000.
Procter & Gamble Company, The: *See—*
Bossu, Frank P., 4,374,035, Cl. 252-91.000.
Prolizenz A.G.: *See—*
Elhaus, Friedrich W.; and Hilge, Bernhard, 4,373,706, Cl. 266-252.000.
Pryor, Timothy R.; Hockley, Bernard; Liptay-Wagner, Nick; Hageniers, Omer L.; and Pastorius, W. J., to Diffracto Ltd. Method and apparatus for electro-optically determining the dimension, location and attitude of objects. 4,373,804, Cl. 356-1.000.
Przytarski, Joachim, to KTS, Kunstoff-Technische Spezialfertigungen Anni Przytarski. Transport container. 4,373,643, Cl. 220-450.000.
Ptaschek, Werner: *See—*
Hoffmann, Erich; and Ptaschek, Werner, 4,374,322, Cl. 250-226.000.
Pullen, Geoffrey J.; Pemberton, John A.; and Brown, Colin J., to EMI Limited. Record bagging. 4,373,319, Cl. 53-573.000.
Pung, Thomas F., Sr.: *See—*
Pearch, Dean A.; and Pung, Thomas F., Sr., 4,373,358, Cl. 464-48.000.
Purdy, Geoffrey H.; and Jackson, Robert R. Wheelchair tray assembly. 4,373,756, Cl. 297-153.000.
Purdy, Kenneth R.: *See—*
Bowen, Mack D.; and Purdy, Kenneth R., 4,373,995, Cl. 202-95.000.
Purdy, Michael L., to Northern Telecom Limited. Protection case for optical fiber splices. 4,373,776, Cl. 350-96.200.
Putch, Samuel: *See—*
Nelson, Norman A., 4,373,752, Cl. 285-141.000.
Qaderi, S. Burhan A.: *See—*
Dickie, Ray A.; Holubka, Joseph W.; and Qaderi, S. Burhan A., 4,374,213, Cl. 523-416.000.
Qurnell, Frank D.: *See—*
Peloquin, Arthur V.; and Qurnell, Frank D., 4,374,024, Cl. 210-241.000.
Rado, William G., to Ford Motor Company. Fuel metering system for an internal combustion engine. 4,373,501, Cl. 123-589.000.
Ragle, Herbert U.: *See—*
Blessom, Norman S.; Ragle, Herbert U.; and DeMoss, Dean, 4,374,402, Cl. 360-104.000.
Ramirez, Ramiro, Jr.: *See—*
Cannon, Jack W.; Herrman, Bradley D.; and Ramirez, Ramiro, Jr., 4,374,429, Cl. 364-900.000.
Ramseier, Paul: *See—*
Holenstein, Ernst; and Ramseier, Paul, 4,373,247, Cl. 29-426.600.
Ranes, Robert B.: *See—*
Parker, John L., Jr.; and Ranes, Robert B., 4,373,656, Cl. 228-203.000.
Rao, Manjeshwar S.: *See—*
Allen, Robert J.; Blake, Edward W.; Rao, Manjeshwar S.; and Hahn, Kurt L., 4,373,370, Cl. 72-349.000.
Rask, Dean R.: *See—*
Bassett, William W.; and Rask, Dean R., 4,373,662, Cl. 236-10.000.
Raux, Jacques; and Benoist, Jacques, to Souriau & Cie. Electrical connector with tactile locking telltale. 4,373,770, Cl. 339-113.00R.
Ray, Lynn L. Racket stringer tensioner. 4,373,721, Cl. 273-73.00A.

Ray, Siba P., to Aluminum Company of America. Inert electrode compositions. 4,374,050, Cl. 252-519.000.

Raychem Corporation: *See—*
Clarke, Raymond, 4,373,768, Cl. 350-96.340.
Cook, Paul M., 4,373,554, Cl. 138-137.000.
Doucet, Jos. 4,374,231, Cl. 525-179.000.
Sonnenberg, Joseph, 4,374,220, Cl. 524-94.000.

Raychem GmbH: *See—*
Ritter, Friedhelm A., 4,373,765, Cl. 339-75.0MP.

Raytheon Company: *See—*
Adlerstein, Michael G., 4,374,012, Cl. 204-192.0SP.
Day, William J., 4,373,504, Cl. 126-21.00A.
Salzer, Thomas E.; and Masheff, Michael S., 4,373,653, Cl. 228-104.000.

RCA Corporation: *See—*
Barnes, Kerry B., 4,374,428, Cl. 364-900.000.
Blumenfeld, Martin A., 4,373,254, Cl. 29-578.000.
Camisa, Raymond L., 4,374,394, Cl. 357-81.000.
Chang, Kern K. N., 4,374,343, Cl. 313-422.000.
Crowley, Albert T., 4,374,438, Cl. 455-265.000.
Hatin, Donald T., 4,374,434, Cl. 369-170.000.
Holmes, David D., 4,374,400, Cl. 358-167.000.
Reichert, Walter F., 4,374,392, Cl. 357-23.000.
Takahashi, Tatsuo, 4,374,037, Cl. 252-301.40S.

Re, Ronald, to Miletech, Inc. Fuel control system. 4,373,502, Cl. 123-512.000.

Rech, Jacques, to Allibert Exploitation. Coupling formation for the interfitting of structural elements. 4,373,306, Cl. 52-98.000.

Reed, Robert D.; and Schwartz, Robert E., to John Zink Company. Immediate ignition smokeless burning of waste gases. 4,373,902, Cl. 431-202.000.

Regehr, Ulrich. Counterflow cooling tower. 4,374,071, Cl. 261-109.000.

Regreny, Andre: *See—*
Gouronnec, Alain; Regreny, Andre; and Treheux, Michel, 4,373,943, Cl. 65-10.100.

Reichert, Walter F., to RCA Corporation. Monolithic integrated circuit interconnection and fabrication method. 4,374,392, Cl. 357-23.000.

Reichman, Steven H.: *See—*
Asgar, Kamal; and Reichman, Steven H., 4,374,085, Cl. 420-470.000.

Reicke, Mark A.: *See—*
Kaplan, Robert A.; Reicke, Mark A.; and Wellman, James E., 4,373,901, Cl. 431-186.000.

Reid, Kenneth H.; and Finn, Bernard J., to General Motors Corporation. Seat belt retracting and locking mechanism. 4,373,748, Cl. 280-806.000.

Reid, Taylor A.; Miller, James A.; and Barber, Duane G., to Beckman Instruments, Inc. Control of system energy in a single beam spectrophotometer. 4,373,813, Cl. 356-326.000.

Reiss, Edward H., Jr., to United States of America, Army. Gas generators having controlled operational attitudes. 4,374,091, Cl. 422-114.000.

Reitter, Guenther W. Rotary impact crusher having a continuous rotary circumference. 4,373,678, Cl. 241-189.00R.

Reliability, Inc.: *See—*
Bradshaw, James I., 4,374,317, Cl. 219-385.000.

Renneker, Dennis N.: *See—*
Lunn, Royston C.; MacAfee, J. Edwin; Grabowski, Robert C.; Renneker, Dennis N.; and Winkler, John M., 4,373,604, Cl. 180-247.000.

Renzel, Peter; and Vermohlen, Werner, to Krautkramer-Branson Incorporated. Ultrasonic test apparatus and sweep voltage generator for use therein. 4,373,394, Cl. 73-606.000.

Resele, Peter; and Haslinger, Manfred, to Steyr-Daimler-Puch Aktiengesellschaft. Front fork and fork head for motorcycles. 4,373,741, Cl. 280-279.000.

Resio, George F. Medicine bottle accessory. 4,373,640, Cl. 215-228.000.

Respitrace Corporation: *See—*
Watson, Herman, 4,373,534, Cl. 128-725.000.

Ressorts Industrie: *See—*
Duchemin, Michel, 4,373,667, Cl. 238-349.000.

Rhodes, Harold B.; and Woodyard, Steven J., to CBS Inc. Tuning fork mounting assembly in electromechanical pianos. 4,373,418, Cl. 84-404.000.

Rhodes, John M.: *See—*
Kim, Sang N.; McMahon, Paul E.; Riggs, John P.; and Rhodes, John M., 4,374,114, Cl. 423-447.100.

Richardson, John K. D. Method of forming floor drainage trough installation. 4,374,078, Cl. 264-35.000.

Ricoh Company, Ltd.: *See—*
Araki, Kunihiko, 4,373,791, Cl. 354-25.000.
Kamiyama, Shin-ichi; Ohshima, Kiyoshi; Mochizuki, Manabu; Kato, Kazuyuki; and Saito, Takeshi, 4,373,800, Cl. 355-10.000.
Mayer, Edward F.; Diamond, Arthur S.; and Chang, Paul, 4,374,192, Cl. 430-108.000.

Rifat, Sultan A. Apparatus for releasably securing ignition devices. 4,373,478, Cl. 123-169.00R.

Riggs, John P.: *See—*
Kim, Sang N.; McMahon, Paul E.; Riggs, John P.; and Rhodes, John M., 4,374,114, Cl. 423-447.100.

Riley, Jean M.: *See—*
Orlando, Michael D.; and Riley, Jean M., 4,374,201, Cl. 435-239.000.

Ringwald, Peter: *See—*
Kemmner, Ulrich; Ringwald, Peter; Mutschele, Hans-Ulrich; and Schillinger, Rainer, 4,373,872, Cl. 417-312.000.

Ritcey, Gordon M.: *See—*
Skeaff, James M.; Ritcey, Gordon M.; Haque, Kazi E.; and Lucas, Bernard H., 4,374,096, Cl. 423-9.000.

Ritchie, Steven S., to Williams Electronics, Inc. Pinball machine having magnetic ball control. 4,373,725, Cl. 273-121.00A.

Rite-Hite Corporation: *See—*
Hipp, Steven J.; and Hahn, Norbert, 4,373,847, Cl. 414-401.000.

Ritter, Friedhelm A., to Raychem GmbH. Plug connection for ribbon cables. 4,373,765, Cl. 339-75.0MP.

RM Industrial Products Company, Inc.: *See—*
Zucker, Jerry; and Porlier, Beth W., 4,374,202, Cl. 501-82.000.

Robert Bosch GmbH: *See—*
Fricke, Hans J., 4,373,428, Cl. 92-159.000.
Giepen, Ulrich; and Meyer, Friedhelm, 4,374,380, Cl. 340-660.000.
Greiner, Max; Krieger, Klaus; Schiller, Gottfried; Walk, Wolf-Rudiger; and Walz, Ludwig, 4,373,496, Cl. 123-569.000.
Hausdorfer, Michael, 4,374,396, Cl. 358-24.000.
Kemmner, Ulrich; Ringwald, Peter; Mutschele, Hans-Ulrich; and Schillinger, Rainer, 4,373,872, Cl. 417-312.000.
Knapp, Heinrich, 4,373,491, Cl. 123-472.000.
Konrath, Karl; and Laufer, Helmut, 4,373,492, Cl. 123-502.000.
Leiber, Heinz, 4,374,421, Cl. 364-426.000.
Plapp, Gunther; and Romann, Peter, 4,373,383, Cl. 73-118.000.

Roberts, Harold F.: *See—*
White, Kenneth T.; and Roberts, Harold F., 4,373,588, Cl. 169-19.000.

Roberts, Lorraine J. Optical apparatus for applying make-up. 4,373,789, Cl. 351-158.000.

Robertshaw Controls Company: *See—*
Barker, Charles E.; Cairo, Anthony C.; Bauer, Frederick T.; and Jackson, Auzville, Jr., 4,373,664, Cl. 236-46.00R.
Shopsky, Harvey J., 4,374,338, Cl. 313-142.000.

Robinson, Jimmie R., to Flint & Walling, Inc. Refuse container lift pocket. 4,373,849, Cl. 414-408.000.

Robison, Thomas E. Reaction gill net. 4,373,286, Cl. 43-10.000.

Roccaforte, Harry I., to Champion International Corporation. Carton for carded product. 4,373,626, Cl. 206-45.140.

Rockwell International Corporation: *See—*
Flanagan, Joseph E.; and Haury, Vernon E., 4,373,976, Cl. 149-92.000.
Heinz, Theodore A., 4,373,404, Cl. 74-424.80B.
Johnson, Robert A., 4,373,396, Cl. 73-651.000.
Stangeland, Maynard L., 4,373,919, Cl. 440-47.000.

Rockwool International A/S: *See—*
Pedersen, Peder, 4,373,957, Cl. 106-93.000.

Rodenbaugh, Ralph L.; and Zwigert, John M., to Deco Coatings Corporation; and Carl Strutz & Company, Inc. Apparatus to supply articles for printing. 4,373,437, Cl. 101-35.000.

Roderick, John J.: *See—*
Allan, John L. H.; Finestone, Arnold B.; and Roderick, John J., 4,374,230, Cl. 525-134.000.

Roeles, Frits: *See—*
Gribnau, Thomas C. J.; Roeles, Frits; and Leuvering, Johannes H. W., 4,373,932, Cl. 436-501.000.

Roett, Maurice F.: *See—*
Chuang, Karl T.; and Roett, Maurice F., 4,374,116, Cl. 423-580.000.

Roger, Bernard P.: *See—*
Hemery, Jacques; and Roger, Bernard P., 4,374,364, Cl. 330-298.000.

Rogers, Norman H.: *See—*
Luk, Kong; and Rogers, Norman H., 4,374,147, Cl. 424-283.000.

Rolen, Jack L.: *See—*
Kluger, Edward W.; and Rolen, Jack L., 4,374,068, Cl. 260-465.00D.

Rollmann, Louis D.; and Valyocsik, Ernest W., to Mobil Oil Corporation. Continuous-stream upflow zeolite crystallization apparatus. 4,374,093, Cl. 422-202.000.

Rolls-Royce Limited: *See—*
Adkins, Richard C., 4,373,327, Cl. 60-39.370.
Meetham, Geoffrey W.; and Gray, John D., 4,374,084, Cl. 420-449.000.
Willis, Jeffrey D.; and Gibney, Nigel P., 4,373,342, Cl. 60-748.000.

Roman, Steven A., to Shell Oil Company. Ketoenamine pyrethroid intermediates. 4,374,275, Cl. 568-351.000.

Romann, Peter: *See—*
Plapp, Gunther; and Romann, Peter, 4,373,383, Cl. 73-118.000.

Roper, Charles R., Jr.; Strattan, John K.; Hetherington, Roy, Jr.; and Hiller, Austin J., to Lukens, Inc. Process for making resulfurized machinable steel. 4,373,967, Cl. 148-2.000.

Rork, Gerald D.: *See—*
Schoenfelder, George A.; Rork, Gerald D.; and Hiltenbrand, Richard E., 4,374,329, Cl. 250-574.000.

Rosen, Harry: *See—*
Medina, Mario, 4,374,028, Cl. 210-669.000.

Rosenbaum, Larry A.: *See—*
Fouss, James L.; Rosenbaum, Larry A.; and Child, James L., Jr., 4,374,079, Cl. 264-46.100.

Rosskopf, Philip A., to Martin Marietta Corporation. Additive for hydraulic cement mixes. 4,373,956, Cl. 106-90.000.

Rost, Helmut: *See—*
Borburgh, Jacques; Naefe, Gerhard; and Rost, Helmut, 4,373,395, Cl. 73-607.000.

Rothwarf, Frederick, to United States of America, Army. Method of making a composite wire. 4,373,977, Cl. 156-51.000.

Rothwell, Geoffrey R., to Imperial Chemical Industries Limited. Aqueous dispersions of coloring materials: poly-alkyleneoxy naphthalene dispersing agents. 4,373,930, Cl. 8-527.000.

Roussel Uclaf: *See—*
Martel, Jacques; Tessier, Jean; and Teche, Andre, 4,374,257, Cl. 549-302.000.

Rowlands, Jeffrey P., to Interchem International S.A. Polymer-modified polyols useful in polyurethane manufacture. 4,374,209, Cl. 521-116.000.

Roy M. Moffitt Company, The: *See—*
Edwards, Robert E.; McKee, Donald H.; and Brown, Claude D., 4,373,363, Cl. 69-28.000.

RSR Corporation: *See—*
Prengaman, Raymond D.; and Howard, James L., 4,373,654, Cl. 228-173.00R.

RTE Corporation: *See—*
Lorenzen, John H.; and Majewski, John V., 4,373,772, Cl. 339-130.00R.

Ruan, Incorporated: *See—*
Giles, William L., 4,373,857, Cl. 414-786.000.

Ruel, Jacques: *See—*
Schapira, Joseph; Ruel, Jacques; Cheminaud, Jean C.; Sadlo, Robert; and Christian, Robert, 4,374,039, Cl. 252-384.000.

Runkle, Dean E., to Bendix Corporation, The. Disc brake assembly. 4,373,614, Cl. 188-72.300.

Russell, Leslie T., to Canadian Patents & Development Limited. Arch forming structure. 4,373,305, Cl. 52-86.000.

Russell, William K.: *See—*
Mason, William L.; and Russell, William K., 4,373,863, Cl. 417-12.000.

Rust, Werner F.: *See—*
Vora, Madhukar B.; and Rust, Werner F., 4,374,011, Cl. 204-192.0EC.

Ruszala, Ferdinand A.; Hoggins, James T.; and Hupp, Stephen S., to Ashland Oil, Inc. Manufacture of phosphosiderite iron phosphate. 4,374,109, Cl. 423-311.000.

Ruszala, Ferdinand A., to Ashland Oil, Inc. Oxydehydrogenation process for preparing methacrylic acid and its lower alkyl esters. 4,374,269, Cl. 562-599.000.

Ruszala, Ferdinand A.; and Weeks, Thomas J., Jr., to Ashland Oil, Inc. Oxydehydrogenation process for preparing methacrylic acid and its lower alkyl esters. 4,374,270, Cl. 562-599.000.

Rutkiewicz, John: *See—*
Pitetti, Raymond C.; and Rutkiewicz, John, 4,374,159, Cl. 427-96.000.

Rutnarak, Sangvorn: *See—*
Mowles, Donald L.; Middaugh, James F.; Rutnarak, Sangvorn; and Genese, Joseph N., 4,373,559, Cl. 141-18.000.

Sabel, Gustav, to Ford Motor Company. Reverse speed shift device for a motor vehicle change-speed gearbox. 4,373,618, Cl. 192-4.00B.

Sadlo, Robert: *See—*
Schapira, Joseph; Ruel, Jacques; Cheminaud, Jean C.; Sadlo, Robert; and Christian, Robert, 4,374,039, Cl. 252-384.000.

Saga, Hitoshi: *See—*
Toda, Haruhiko; Higo, Moriaki; Saga, Hitoshi; and Shinbo, Masafu, 4,374,292, Cl. 585-360.000.

Sagal, John, Jr.: *See—*
Henry, Arnold W.; Azar, Jack C.; and Sagal, John, Jr., 4,373,239, Cl. 29-132.000.

Sage Manufacturing Co., Inc.: *See—*
Fera, Victor, 4,373,236, Cl. 29-3.000.

Saito, Hiroshi: *See—*
Saito, Nobuyuki; and Saito, Hiroshi, 4,374,377, Cl. 340-384.00E.
Shibata, Shoji; Kumagai, Akira; Harada, Masatoshi; Yano, Singo; Saito, Hiroshi; and Takahashi, Kunio, 4,374,284, Cl. 568-817.000.

Saito, Nobuyuki; and Saito, Hiroshi, to Sumitomo Electric Industries, Ltd. Piezoelectric audio transducer. 4,374,377, Cl. 340-384.00E.

Saito, Takeshi: *See—*
Kamiyama, Shin-ichi; Ohshima, Kiyoshi; Mochizuki, Manabu; Kato, Kazuyuki; and Saito, Takeshi, 4,373,800, Cl. 355-10.000.

Sakai, Toshihiro; and Kuhara, Tetsuji, to Fujitsu Limited; and USAC Electronic Industrial Co., Ltd. Data processing system. 4,374,410, Cl. 364-200.000.

Sakamoto, Yukio; Tanaka, Tetsuo; Kuboto, Masaaki; and Sugitani, Masami, to Murata Manufacturing Co., Ltd. Electromagnetic interference elimination filter. 4,374,369, Cl. 333-182.000.

Salama, Amir, to Northern Telecom Limited. Method and apparatus for surface-treating predetermined areas of a surface of a body. 4,374,004, Cl. 204-15.000.

Salvajor Company: *See—*
Sherman, George O., Jr., 4,373,676, Cl. 241-36.000.

Salzer, Thomas E.; and Masheff, Michael S., to Raytheon Company. Method and apparatus for ultrasonic bonding. 4,373,653, Cl. 228-104.000.

Samson, Marc: *See—*
Kleemann, Axel; Martens, Jurgen; and Samson, Marc, 4,374,062, Cl. 260-112.50R.

Sanders, James M.: *See—*
Klemarczyk, Philip T.; Sanders, James M.; Vock, Manfred H.; Vinals, Joaquin F.; Schmitt, Frederick L.; and Granda, Edward J., 4,374,054, Cl. 252-522.00R.

Sandoz, Inc.: *See—*
Barcza, Sandor, 4,374,130, Cl. 424-184.000.

Sandoz Ltd.: *See—*
Wicki, Heinz, 4,374,064, Cl. 260-147.000.

Sano, Ichiro, to Furukawa Battery Co., Ltd., The. Cover apparatus in monoblock storage battery. 4,374,187, Cl. 429-175.000.

Sano, Yasuro, to Janome Sewing Machine Co. Ltd. Sewing machine with a cycle pattern stitching device. 4,373,461, Cl. 112-274.000.

Santiago, Andres; and Santiago, Enrique, to Zeuna-Staerker GmbH & Co. KG. Manifold on an internal combustion engine. 4,373,331, Cl. 60-323.000.

Santiago, Enrique: *See—*
Santiago, Andres; and Santiago, Enrique, 4,373,331, Cl. 60-323.000.

Santrade Ltd.: *See—*
Kanakaris, Georges, 4,373,411, Cl. 82-44.000.

Saperstein, Zalman P.; El-Bourini, Refki M.; and Munch, John E., Jr., to Modine Manufacturing Company. Radiator with heat exchanger. 4,373,578, Cl. 165-141.000.

Sartori, Francesco. Device for rigidly coupling a handle to its corresponding manual instrument, and an instrument provided with the said device. 4,373,828, Cl. 403-263.000.

Sasaki, Katumasa: *See—*
Uenishi, Toshiaki; Harada, Hidefumi; Sasaki, Katumasa; Akagi, Akio; and Yamasaki, Takanori, 4,373,963, Cl. 106-304.000.

Sasaya, Hideaki: *See—*
Tanaka, Taro; Sasaya, Hideaki; and Inagaki, Mitsuo, 4,373,880, Cl. 418-150.000.

Sato, Akio: *See—*
Hirakawa, Hiroshi; Sato, Akio; Takusagawa, Takashi; and Ikeda, Nobumasa, 4,373,566, Cl. 152-353.00G.

Sato, Akira: *See—*
Morishita, Teru; Sugiyama, Matuyosi; Sato, Akira; and Suzuki, Toshikazu, 4,373,673, Cl. 239-703.000.

Sato, Kazuhiro: *See—*
Ogawa, Hiroshi; Sato, Kazuhiro; Shibata, Norio; Oguri, Katsuhiko; Utida, Masayoshi; and Ono, Tsuyoshi, 4,374,433, Cl. 369-136.000.

Sato Technical Research Laboratory Ltd.: *See—*
Ueda, Setsuo; Yasuda, Takashi; Yamada, Tokuyoshi; and Kobayashi, Shigeki, 4,374,074, Cl. 264-8.000.

Satoh, Nobuo: *See—*
Takizawa, Junichi; and Satoh, Nobuo, 4,373,747, Cl. 280-802.000.

Saunders Archery Co.: *See—*
Saunders, Charles A., 4,373,503, Cl. 124-20.00R.

Saunders, Charles A., to Saunders Archery Co. Slingshot with outer sleeve for elastic band protection. 4,373,503, Cl. 124-20.00R.

Sauvaget, Gaston. Synchronized hydraulic rotary converter and distributor device. 4,373,878, Cl. 418-23.000.

Sawatani, Tadashi; Ishii, Mitsuo; and Yoshimura, Hirofumi, to Nippon Steel Corporation. Process for the production of ferritic stainless steel sheets or strips and products produced by said process. 4,373,971, Cl. 148-12.0EA.

Sawyer, George N., to Trane CAC, Inc. Combination discharge gas muffler and water heater. 4,373,354, Cl. 62-238.600.

Say, Donald L., to North American Philips Consumer Electronics Corp. Beam focusing means in a unitized tri-potential CRT electron gun assembly. 4,374,341, Cl. 313-414.000.

Say, Donald L., to North American Philips Consumer Electronics Corp. Focusing means in a unitized bi-potential CRT electron gun assembly. 4,374,342, Cl. 313-414.000.

Scaramucci, Domer. Fire safe disc valve. 4,373,542, Cl. 137-72.000.

Scartazzini, Riccardo: *See—*
Kocsis, Karoly; Schneider, Peter; Fechtig, Bruno; and Scartazzini, Riccardo, 4,374,134, Cl. 424-246.000.

Schaaf, Wayne J.; and Boswell, Bennie J., to Chromalloy American Corporation. Implement and last motion hitch locking mechanism therefor. 4,373,591, Cl. 172-328.000.

Schachar, Ronald A. Variable power intraocular lens and method of implanting into the posterior chamber. 4,373,218, Cl. 3-13.000.

Schaefer, Carl F.; and Bedford, Raymond E., to General Motors Corporation. Cordierite bead catalyst support and method of preparation. 4,374,044, Cl. 252-455.00R.

Schaefer, William J. Automobile body repair. 4,373,373, Cl. 72-413.000.

Schafer, Otmar U. Method and apparatus for alternately heating and cooling a heat exchanger. 4,373,574, Cl. 165-2.000.

Schaffner, Mario R. Circulating page loose system. 4,374,412, Cl. 364-200.000.

Schapira, Joseph; Ruel, Jacques; Cheminaud, Jean C.; Sadlo, Robert; and Christian, Robert, to Compagnie Francaise de Produits Industriels. Anticlumping products and treatments based on amin salts. 4,374,039, Cl. 252-384.000.

Schapper, Mark A., to Sphere Investments Limited. Sorting apparatus. 4,373,638, Cl. 209-570.000.

Schepers, Bernhard; Nobbe, Volker; Schroder, Bernd; Borer, Werner; and Kullack, Manfred, to Swiss Aluminium Ltd. Process for the production of coarse crystalline alumina. 4,374,119, Cl. 423-625.000.

Schey, John A., to Modine Manufacturing Company. Method of forming integral flanges in a sheet. 4,373,369, Cl. 72-347.000.

Schiller, Gottfried: *See—*
Greiner, Max; Krieger, Klaus; Schiller, Gottfried; Walk, Wolf-Rudiger; and Walz, Ludwig, 4,373,496, Cl. 123-569.000.

Schillinger, Rainer: *See—*
Kemmner, Ulrich; Ringwald, Peter; Mutschele, Hans-Ulrich; and Schillinger, Rainer, 4,373,872, Cl. 417-312.000.

Schindler, Manfred; Ficht, Reinhold; and Vogt, Hermann, to Ficht GmbH. Scavenging arrangement for a two-stroke internal combustion piston engine. 4,373,474, Cl. 123-56.00B.

Schlafer, John, to GTE Laboratories Incorporated. Acoustic to optical pulse code modulating transducer. 4,373,781, Cl. 350-96.290.

Schmidt, Donald H. Flexible cork handle-wrapping strip. 4,373,718, Cl. 273-75.000.

Schmidt, Frederick R.: *See—*
Ng, Henry H.; and Schmidt, Frederick R., 4,374,381, Cl. 340-711.000.
Schmidt, Laurenz: *See—*
Bauser, Elisabeth; Frik, Martina; Lochner, Karl S.; and Schmidt, Laurenz, 4,373,988, Cl. 156-622.000.
Schmidt, Peter: *See—*
Herberholz, Klaus; and Schmidt, Peter, 4,373,755, Cl. 294-67.00R.
Schmidt, Robert J., to UOP Inc. Hydration of olefins. 4,374,286, Cl. 568-907.000.
Schmitt, Frederick L.: *See—*
Klemarczyk, Philip T.; Sanders, James M.; Vock, Manfred H.; Vinals, Joaquin F.; Schmitt, Frederick L.; and Granda, Edward J., 4,374,054, Cl. 252-522.00R.
Schreck, Ronald P.; Light, Kenneth K.; Hall, John B.; Schmitt, Frederick L.; Vock, Manfred H.; Schreiber, William L.; Vinals, Joaquin F.; and Kiwala, Jacob, 4,374,055, Cl. 252-522.00R.
Schneider, Peter: *See—*
Kocsis, Karoly; Schneider, Peter; Fechtig, Bruno; and Scartazzini, Riccardo, 4,374,134, Cl. 424-246.000.
Schnell, Ludwig L., to Schuttgutfordertechnik AG. Device for conveying a slurry, such as sand or gravel or the like, lying under water. 4,373,276, Cl. 37-61.000.
Schober, Karl; and Groll, Fritz, to Daimler-Benz Aktiengesellschaft. Exhaust adapter for exhaust gas measurements. 4,373,751, Cl. 285-137.00R.
Schoenfelder, George A.; Rork, Gerald D.; and Hiltenbrand, Richard E., to Pittway Corporation. Smoke detector with test apparatus. 4,374,329, Cl. 250-574.000.
Schreck, Ronald P.; Light, Kenneth K.; Hall, John B.; Schmitt, Frederick L.; Vock, Manfred H.; Schreiber, William L.; Vinals, Joaquin F.; and Kiwala, Jacob, to International Flavors & Fragrances Inc. Alkyl esters of 1-alkanoyl cycloalkanols and organoleptic uses thereof. 4,374,055, Cl. 252-522.00R.
Schreiber, William L.: *See—*
Schreck, Ronald P.; Light, Kenneth K.; Hall, John B.; Schmitt, Frederick L.; Vock, Manfred H.; Schreiber, William L.; Vinals, Joaquin F.; and Kiwala, Jacob, 4,374,055, Cl. 252-522.00R.
Schreier, Josef: *See—*
Gehle, Karl; and Schreier, Josef, 4,373,757, Cl. 299-43.000.
Schreiner, Charles P.: *See—*
Wolters, Richard H.; Anderson, William C.; Tyke, Charles R.; and Schreiner, Charles P., 4,373,642, Cl. 220-72.000.
Schritt, Renaldo F.; and Kenney, Martin J., to Grad-Line, Inc. Transmission control system. 4,373,619, Cl. 192-0.090.
Schroder, Bernd: *See—*
Schepers, Bernhard; Nobbe, Volker; Schroder, Bernd; Borer, Werner; and Kullack, Manfred, 4,374,119, Cl. 423-625.000.
Schroeder, Jon M., to Indy Electronics, Inc. Method and apparatus for encapsulation casting. 4,374,080, Cl. 264-102.000.
Schuddemat, Jacob P.; and Huijsing, Johan H., to Brooks Instrument B.V. Direction sensitive flow velocity meter and sensing plate to be used on it. 4,373,386, Cl. 73-189.000.
Schuhmacher, Ernst, to Deere & Company. Torque limiting clutch. 4,373,924, Cl. 464-38.000.
Schulmeyer, Lutz: *See—*
Fricke, Hans; Kiess, Jurgen; and Schulmeyer, Lutz, 4,373,691, Cl. 246-34.0CT.
Schultheis, Hans-Werner, to Hubtex Maschinenbau GmbH. Warp beam insertion carriage. 4,373,854, Cl. 414-742.000.
Schulz, Claus: *See—*
Kundler, Walter; Pientak, Reinhold; Schulz, Claus; and Skerka, Wolfgang, 4,374,423, Cl. 364-434.000.
Schumacher, Jerome A.: *See—*
Neitzel, Emery W.; and Schumacher, Jerome A., 4,373,509, Cl. 126-299.00D.
Schuttgutfordertechnik AG: *See—*
Schnell, Ludwig L., 4,373,276, Cl. 37-61.000.
Schwab Safe Co., Inc.: *See—*
Miller, Norman; and McKinnis, John F., Jr., 4,373,450, Cl. 109-75.000.
Schwartz, Larry A.; Geiter, Robert; and Albertsen, Peter S., to Jamestown Group. Stove construction. 4,373,507, Cl. 126-289.000.
Schwartz, Robert E.: *See—*
Reed, Robert D.; and Schwartz, Robert E., 4,373,902, Cl. 431-202.000.
Schwarz, Herwig J.; Burde, Hans-Jurgen H.; and Minet, Gunter, to Teroson GmbH. Sound insulating material. 4,374,172, Cl. 428-308.400.
Schweizerische Lokomotiv und Maschinenfabrik: *See—*
Pfister, Johann K., 4,373,447, Cl. 105-399.000.
Schwing, Friedrich, to Friedrich Wilh. Schwing GmbH. Viscous material pump, in particular for the conveyance of concrete. 4,373,875, Cl. 417-517.000.
Schwing, Friedrich: *See—*
v.Eckardstein, Karl-Ernst; Fiala, Werner; and Schwing, Friedrich, 4,373,225, Cl. 15-104.06A.
SCM Corporation: *See—*
Andonian, Harry A.; and Dickinson, Warren A., Jr., 4,374,153, Cl. 426-321.000.
Scorey, Clive R.; and Smith, Roy A., to Pfizer Inc. Copper base spinodal alloy strip and process for its preparation. 4,373,970, Cl. 148-11.50C.
Scott & Fetzer Company, The: *See—*
Kaplan, Robert A.; Reicke, Mark A.; and Wellman, James E., 4,373,901, Cl. 431-186.000.
Scragg, Robert L. Electromagnetic process and apparatus for making methanol. 4,374,288, Cl. 568-910.000.
Seabaugh, Alan C.: *See—*
United States of America, National Aeronautics and Space Administration; Mattauch, Robert J.; and Seabaugh, Alan C., 4,373,989, Cl. 156-635.000.
Sebastian, James A. Device for displaying indicia. 4,373,281, Cl. 40-491.000.
Sebenik, Roger F.; Hallada, Calvin J.; Barry, Henry F.; and Tsigdinos, George A., to Amax Inc. Recovery and recycle of molybdenum values from coal liquefaction residue. 4,374,100, Cl. 423-56.000.
Sekiguchi, Toshio, to Hokushin Elect. Works, Ltd. Signal generator for electromagnetic flowmeters. 4,373,400, Cl. 73-861.120.
Selsted, Walter T. Pool water level maintenance apparatus and method. 4,373,220, Cl. 4-508.000.
Selusnik, Jerome A.: *See—*
Wright, Norbert L.; and Selusnik, Jerome A., 4,373,648, Cl. 223-28.000.
Sepponen, Raimo E. NMR Diagnosis apparatus. 4,374,360, Cl. 324-309.000.
Seton Company: *See—*
Cioca, Gheorghe, 4,374,121, Cl. 424-19.000.
Severeid, David E.; and Jech, Daryl D., to International Telephone and Telegraph Corporation. Process for the secondary treatment of wastewater. 4,374,027, Cl. 210-608.000.
Shaffer, John W.: *See—*
Hall, Harold H., Jr.; Bouchard, Andre C.; Shaffer, John W.; and Gavenonis, Thomas L., 4,374,073, Cl. 264-3.00R.
Shah, Hasmukh: *See—*
Ulin, Roy A.; Foley, Ted; and Shah, Hasmukh, 4,373,629, Cl. 206-350.000.
Shang, Jerry Y.: *See—*
Pitrolo, Augustine A.; Mei, Joseph S.; and Shang, Jerry Y., 4,373,454, Cl. 110-347.000.
Shanoski, Henry, to General Tire & Rubber Company, The. One component in-mold coating composition comprising a composition having a plurality of polymerizable ethylenic double bonds and a material containing isocyanate. 4,374,238, Cl. 528-50.000.
Sharnoa Ltd.: *See—*
Hagiz, Yitzchak, 4,373,589, Cl. 171-31.000.
Sharp, Brian W.: *See—*
Hill, Jack; Sharp, Brian W.; Warburton, Dennis; Walker, Robert B., deceased; and Walker, Thomas, administrator, 4,374,136, Cl. 424-251.000.
Sharp Kabushiki Kaisha: *See—*
Itoh, Fukusaburo, 4,373,801, Cl. 355-14.0FU.
Nonomura, Keisaku; Takamatsu, Toshiaki; Uede, Hisashi; and Wada, Tomio, 4,373,784, Cl. 350-336.000.
Shekel, Joseph; and DeStefano, Joseph, to Auto-Line Manufacturing Corp. Auxiliary connector including flip adapter. 4,373,762, Cl. 339-31.00B.
Shekel, Joseph; and DeStefano, Joseph, to Auto-Line Manufacturing Corp. Auxiliary connector including flip adapter. 4,373,763, Cl. 339-31.00B.
Shekleton, Jack R., to International Harvester Company. Combustors. 4,373,325, Cl. 60-39.060.
Shell Oil Company: *See—*
Ayers, Ray R.; and Kipp, Robert M., 4,373,753, Cl. 285-319.000.
Geis, William A.; and Frimodig, Carl H., Jr., 4,373,547, Cl. 137-377.000.
Roman, Steven A., 4,374,275, Cl. 568-351.000.
Trevino, Cesar A.; and Stellman, Richard G., 4,374,020, Cl. 208-216.00R.
Shenoha, James L., to Norwood Marking & Equipment Co., Inc. Axially aligned driving cam imprinter. 4,373,436, Cl. 101-27.000.
Shepherd, Kenneth D.: *See—*
Brown, Robert J.; and Shepherd, Kenneth D., 4,373,543, Cl. 137-74.000.
Shepler, Eric F.: *See—*
Piscitelli, R. Amelia; Hemmer, Valentine J.; Fischer, Charles P.; and Shepler, Eric F., 4,373,773, Cl. 339-262.00R.
Sheppard, Darrel J., Sr. Gearless hydraulic transmission and vehicle drive system. 4,373,605, Cl. 180-308.000.
Sherman, George O., Jr., to Salvajor Company. Waste food disposal system. 4,373,676, Cl. 241-36.000.
Sherritt Gordon Mines Limited: *See—*
Adamovic, Emilija, 4,374,173, Cl. 428-325.000.
Shibata, Norio: *See—*
Ogawa, Hiroshi; Sato, Kazuhiro; Shibata, Norio; Oguri, Katsuhiko; Utida, Masayoshi; and Ono, Tsuyoshi, 4,374,433, Cl. 369-136.000.
Shibata, Shoji; Kumagai, Akira; Harada, Masatoshi; Yano, Singo; Saito, Hiroshi; and Takahashi, Kunio, to Minophagen Pharmaceutical Company. Antiulcer, antiinflammatory, and antiallergic agent comprising as the main ingredient olean-12-ene-3β, 30-diol which is devoid of side effects of glycyrrhetinic acid and a new process for preparation of olean-12-ene-3β, 30-diol. 4,374,284, Cl. 568-817.000.
Shields, R. James: *See—*
Connelly, Lawrence J.; Kane, James; and Shields, R. James, 4,374,102, Cl. 423-206.00T.
Shikata, Mitsuo; and Usui, Kazuto, to Yanmar Diesel Engine Co., Ltd. Construction of power transmitting device for internal combustion engine. 4,373,480, Cl. 123-195.00A.
Shimada, Fumio; and Sugiura, Yoji, to Canon Kabushiki Kaisha; and Canon Denshi Kabushiki Kaisha. Electromagnetically driven shutter. 4,373,797, Cl. 354-234.000.

Shimizu, Tokuo, to Olympus Optical Co., Ltd. Flat motor. 4,374,336, Cl. 310-154.000.
Shimura, Kiichiro; Tamura, Takeo; Kido, Takayoshi; Hara, Hiroshi; and Tanaka, Morimasa, to Nissan Motor Company, Limited; and Ichiko Industries Limited. Wiper device. 4,374,348, Cl. 318-443.000.
Shinbo, Masafu: *See—*
Toda, Haruhiko; Higo, Moriaki; Saga, Hitoshi; and Shinbo, Masafu, 4,374,292, Cl. 585-360.000.
Shindelar, Aloysius C., to Deere & Company. Dripless coupler. 4,373,551, Cl. 137-614.060.
Shingu, Hideo; Arai, Kozo; and Ootsuka, Ryotatsu, to Showa Aluminium Kabushiki Kaisha. Process of preparing aluminum of high purity. 4,373,950, Cl. 75-68.00R.
Shinshu Seiki Kabushiki Kaisha: *See—*
Arai, Kenichiro, 4,373,438, Cl. 101-93.040.
Mikoshiba, Hitoshi, 4,373,439, Cl. 101-93.090.
Shintani, Akira: *See—*
Nanba, Mitsuo; Ogirima, Masahiko; Kozuka, Hirotsugu; and Shintani, Akira, 4,373,975, Cl. 148-189.000.
Shippell, Joseph C., to Consolidated Packaging Corporation. Collapsible pallet mounted container. 4,373,637, Cl. 206-600.000.
Shiragaki, Sei: *See—*
Yamamoto, Yuji; and Shiragaki, Sei, 4,374,331, Cl. 307-291.000.
Shishido, Kunihiro: *See—*
Kishida, Nobuhiro; Shishido, Kunihiro; and Haryu, Satoshi, 4,373,891, Cl. 425-174.400.
Shoemaker, Arthur H., to Warner Lambert Technologies, Inc. Microscope objective. 4,373,785, Cl. 350-414.000.
Shoglow, Harry. Family baseball game. 4,373,724, Cl. 273-89.000.
Shogren, David K., to Xerox Corporation. Precession scanning system for copier device. 4,373,803, Cl. 355-49.000.
Shopsky, Harvey J., to RobertShaw Controls Company. Igniter structures and methods of making the same. 4,374,338, Cl. 313-142.000.
Showa Aluminium Kabushiki Kaisha: *See—*
Shingu, Hideo; Arai, Kozo; and Ootsuka, Ryotatsu, 4,373,950, Cl. 75-68.00R.
Shreve, James S. Automated exposure-contrast control index meter. 4,373,810, Cl. 356-226.000.
Shridharani, Ketan G.: *See—*
Tarrer, Arthur R.; and Shridharani, Ketan G., 4,374,016, Cl. 208-10.000.
Siemens Aktiengesellschaft: *See—*
Borburgh, Jacques; Naefe, Gerhard; and Rost, Helmut, 4,373,395, Cl. 73-607.000.
Heinzl, Joachim, 4,374,388, Cl. 346-140.00R.
Siemens Corporation: *See—*
Holesha, John, 4,374,308, Cl. 179-99.0LS.
Signetics Corporation: *See—*
Malwah, Manohar L., 4,373,250, Cl. 29-571.000.
Silberman, Raphael J.; Tilton, Frederick T.; Smith, Everett H.; and Wichkoski, Dennis A., to Baker International Corporation. Single trip tubing hanger assembly. 4,373,584, Cl. 166-117.700.
Silin, Askold A.: *See—*
Gorelik, Rudolf A.; Dukhovskoi, Evgeny A.; Kleiman, Alexandr M.; Kleimenov, Nikolai A.; Markevich, Andrei M.; Ponomarev, Ardalion N.; Silin, Askold A.; Skok, Valentina M.; Talroze, Viktor L.; Khomyakov, Anatoly V.; and Lyapunov, Andrei Y., 4,374,180, Cl. 428-421.000.
Silverman, Harold: *See—*
Foster, Dean H.; and Silverman, Harold, 4,373,711, Cl. 271-171.000.
Simon-Rosedowns Limited: *See—*
Alexander, David G.; and Woolley, Ian J., 4,373,434, Cl. 100-43.000.
Simunek, Frantisek: *See—*
Friese, Axel; and Simunek, Frantisek, 4,373,631, Cl. 206-438.000.
Singer Company, The: *See—*
Dunn, William H.; Garron, Stephen A.; Horey, Leonard I.; and Wurst, John W., 4,373,459, Cl. 112-158.00E.
Mallinson, Richard B., 4,373,805, Cl. 356-4.000.
Singh, Shobha: *See—*
Camlibel, Irfan; Singh, Shobha; and Van Uitert, LeGrand G., 4,374,391, Cl. 357-17.000.
Sivaramakrishnan, Parameswar, to Mobay Chemical Corporation. Polycarbonate having improved hydrolytic stability. 4,374,226, Cl. 524-399.000.
SK&F Lab Co.: *See—*
Graboyes, Harold; Kasper, Thomas J.; and Vaidya, Praful D., 4,374,252, Cl. 548-343.000.
Skalmierski, Bogdan; and Mroz, Krzysztöf, to Politechnika Slaska im. Wincentego Pstrowskiego. Method of manufacture of sound box of stringed instruments, particularly violins. 4,373,980, Cl. 156-160.000.
Skeaff, James M.; Ritcey, Gordon M.; Haque, Kazi E.; and Lucas, Bernard H., to Canadian Patents & Development Limited. Uranium ore processing. 4,374,096, Cl. 423-9.000.
Skerka, Wolfgang: *See—*
Kundler, Walter; Pientak, Reinhold; Schulz, Claus; and Skerka, Wolfgang, 4,374,423, Cl. 364-434.000.
SKF (U.K.) Limited: *See—*
Greener, Brian; Pedder, Simon J.; and Forknall, John P., 4,373,759, Cl. 308-187.200.
Skok, Valentina M.: *See—*
Gorelik, Rudolf A.; Dukhovskoi, Evgeny A.; Kleiman, Alexandr M.; Kleimenov, Nikolai A.; Markevich, Andrei M.; Ponomarev, Ardalion N.; Silin, Askold A.; Skok, Valentina M.; Talroze, Viktor L.; Khomyakov, Anatoly V.; and Lyapunov, Andrei Y., 4,374,180, Cl. 428-421.000.
Slade, Louise: *See—*
Cole, Bruce A.; Levine, Harold I.; McGuire, Michael T.; Nelson, Kathleen J.; and Slade, Louise, 4,374,154, Cl. 426-565.000.
Lindstrom, Ted R.; and Slade, Louise, 4,374,151, Cl. 426-19.000.
Slish, Frank: *See—*
Faulring, Gloria M.; Fitzgibbon, Alan; and Slish, Frank, 4,373,948, Cl. 75-57.000.
Sloan, Albert H. Submersible hydraulic pump of the axially directed inlet and tangential outlet type. 4,373,860, Cl. 415-185.000.
Sloan, Thomas W.: *See—*
Yolton, Charles F.; Cloran, Thomas S.; and Sloan, Thomas W., 4,374,075, Cl. 264-8.000.
Smale, Charles H., to General Motors Corporation. Ceramic duct system for turbine engine. 4,373,326, Cl. 60-39.161.
Smigelski, Thomas S., to NCR Corporation. Suppression of parasitic sidewall transistors in locos structures. 4,373,965, Cl. 148-1.500.
Smith, David W.: *See—*
Hanson, Timothy A.; and Smith, David W., 4,373,887, Cl. 425-143.000.
Smith, Donald L. Venting system for oil or gas-fired appliances. 4,373,510, Cl. 126-307.00A.
Smith, Donald R.: *See—*
Clements, Philip R.; and Smith, Donald R., 4,373,606, Cl. 181-151.000.
Smith, Everett H.: *See—*
Silberman, Raphael J.; Tilton, Frederick T.; Smith, Everett H.; and Wichkoski, Dennis A., 4,373,584, Cl. 166-117.700.
Smith, Harvey A.; and Fleming, Joseph T., to United Technologies Corporation. Universal tail pipe connector. 4,373,377, Cl. 73-23.000.
Smith Kline & French Laboratories Limited: *See—*
Durant, Graham J.; Emmett, John C.; and Ganellin, Charon R., 4,374,251, Cl. 548-309.000.
Smith, Marvin F., Jr. Reactionary human silhouette target. 4,373,733, Cl. 273-381.000.
Smith, Paul W. Method and apparatus for cutting and scoring folding container blanks. 4,373,929, Cl. 493-355.000.
Smith, Robert E.; and Gormley, Donald R., to United States of America, Navy. High pressure electrolytic oxygen generator. 4,374,014, Cl. 204-260.000.
Smith, Roy A.: *See—*
Scorey, Clive R.; and Smith, Roy A., 4,373,970, Cl. 148-11.50C.
Smith, Thomas M. Infra-red generator. 4,373,904, Cl. 431-328.000.
Smyth, Brice W., to Delorean Research Limited Partnership. Vacuum system for a moving production line. 4,373,885, Cl. 425-129.00R.
Snap-on Tools Corporation: *See—*
Olson, Gene E.; Thompson, Jerome A.; Grover, Donald D.; Stout, Christopher B.; Becker, Thomas P.; and Kaufman, Glenn A., 4,373,384, Cl. 73-119.00A.
Snelling, Christopher; and Lenhard, Myron J., to Xerox Corporation. Multi-mode electrostatographic printing machine. 4,373,799, Cl. 355-3.00R.
Sobajima, Katsunobu: *See—*
Inamoto, Hiroshi; Sobajima, Katsunobu; and Miyoshi, Shoichi, 4,373,826, Cl. 403-14.000.
Socha, Gregory E., to Dow Chemical Company, The. Readily dissolvable polysaccharide compositions. 4,373,959, Cl. 106-194.000.
Societe Alsacienne de Services Industriels: *See—*
Bajard, Jean, 4,373,374, Cl. 73-19.000.
Societe Anonyme de Recherches de Mecanique Appliquee: *See—*
Monteillet, Denis, 4,373,832, Cl. 403-374.000.
Societe Anonyme dite: Vallourec: *See—*
Mantelle, Jean; and Trouillet, Georges, 4,373,750, Cl. 285-55.000.
Societe Nationale d'Etude et de Construction de Moteurs d'Aviation (S.N.E.C.M.A.): *See—*
Camboulives, Andre A. M. L.; Debeneix, Pierre; Gendronneau, Claude V. L.; and Hugnet, Roger P., 4,373,421, Cl. 184-6.400.
Sogo Pharmaceutical Co., Ltd.: *See—*
Osawa, Yasuko; and Uchikuga, Saburo, 4,374,247, Cl. 548-146.000.
Soini, Erkki; and Hemmila, Ilkka, to Wallac Oy. Fluorescence spectroscopy assay means with fluorescent chelate of a lanthanide. 4,374,120, Cl. 436-546.000.
Solartron Electronic Group Limited, The: *See—*
Ashford, David W.; and Hummel-Newell, Robert, 4,373,916, Cl. 434-22.000.
Solomon, James E.: *See—*
Khadder, Wadie N.; Wang, Jia-Tarng; and Solomon, James E., 4,373,253, Cl. 29-576.00B.
Somers, Edward V.; and Isenberg, Arnold O., to Westinghouse Electric Corp. Fuel cell generator and method of operating same. 4,374,184, Cl. 429-17.000.
Sonnenberg, Joseph, to Raychem Corporation. Imide flame retardants and compositions containing them. 4,374,220, Cl. 524-94.000.
Sonoco Products Company: *See—*
Horton, John D., 4,373,928, Cl. 493-103.000.
Sorensen, Jens O., to Trade Finance International. Thermal energy conversion system and method utilizing unencased expandites. 4,373,339, Cl. 60-649.000.
Soto, Eduardo R. R., to Tecnologia Argentina S.A. Mallet. 4,373,565, Cl. 145-36.000.
Souriau & Cie: *See—*
Raux, Jacques; and Benoist, Jacques, 4,373,770, Cl. 339-113.00R.
Southard, Carl: *See—*
Goudreau, Noel; Colevris, Nick; and Southard, Carl, 4,373,211, Cl. 2-2.000.

Spaeth, Hans, to Maag Gear-Wheel & Machine Company Ltd. Gear measuring machine for inspecting helical gears. 4,373,268, Cl. 33-179.50R.

Spath, Thomas E.: *See—*

Criscuolo, James M., 4,373,517, Cl. 128-75.000.

Specht, Donald P.: *See—*

McGuckin, Hugh G.; Hartman, Susan E.; and Specht, Donald P., 4,374,194, Cl. 430-199.000.

Special Metals Corporation: *See—*

Asgar, Kamal; and Reichman, Steven H., 4,374,085, Cl. 420-470.000.

Sperry Corporation: *See—*

Viola, Raymond D.; and Hanley, Gerard L., 4,374,368, Cl. 333-128.000.

Sphere Investments Limited: *See—*

Schapper, Mark A., 4,373,638, Cl. 209-570.000.

Spiral Binding Company, Inc.: *See—*

Dawson, Kenneth H., 4,373,558, Cl. 140-71.00R.

Spivack, John D.; Dexter, Martin; and Pastor, Stephen D., to Ciba-Geigy Corporation. Alkanolamine ester of 1,1-biphenyl-2,2-diyl-and alkylidene-1,1-biphenyl-2,2-diyl-cyclic phosphites. 4,374,219, Cl. 524-91.000.

Sprague Electric Company: *See—*

Avery, Grant D., 4,374,333, Cl. 307-309.000.

Sprain, Charles E.: *See—*

Crews, Edgar W.; and Sprain, Charles E., 4,373,681, Cl. 242-25.00A.

Spruell, Jerry V.; and Lewis, Jennings B., III, to Union Carbide Corporation. Method for increasing vessel lining life for basic oxygen furnaces. 4,373,949, Cl. 75-60.000.

Stabilus GmbH: *See—*

Molders, Werner, 4,373,707, Cl. 267-64.120.

Stamp, Custis L., Jr.; Herzog, Rollie R.; and Brennan, Michael A., to Trane CAC, Inc. Control apparatus for an air conditioning system providing a plurality of energy-saving modes of operation. 4,373,351, Cl. 62-160.000.

Standard Oil Company, The: *See—*

Blum, Patricia R.; and Nicholas, Mark L., 4,374,043, Cl. 252-435.000.

Burrington, J. D.; Grasselli, R. K.; and Kartisek, C. T., 4,374,293, Cl. 585-410.000.

Standard Oil Company (Indiana): *See—*

Cox, Gordon F. N.; and Hsu, Feng H., 4,373,836, Cl. 405-217.000.

Stangeland, Maynard L., to Rockwell International Corporation. Multi-passage variable diffuser inlet. 4,373,919, Cl. 440-47.000.

Star Manufacturing Co.: *See—*

Kim, Kwon S., 4,373,312, Cl. 52-309.900.

Starck, William R., to A.M.S. Corporation. Resilient friction sash balance. 4,373,295, Cl. 49-435.000.

Stark, Terrence L., to General Motors Corporation. Diesel engine dual path exhaust cleaner and burner system. 4,373,330, Cl. 60-311.000.

Stecher, Friedhelm: *See—*

Morsbach, Martin; Stecher, Friedhelm; and Stocker, Eberhard, 4,373,735, Cl. 277-235.00B.

Steelcase Inc.: *See—*

Knoblauch, Jack R.; Beukema, Duane M.; and Hozeski, Kenneth W., 4,373,692, Cl. 248-162.100.

Steele, Carroll M.: *See—*

Crane, Hewitt D.; and Steele, Carroll M., 4,373,787, Cl. 351-210.000.

Steger, Philip J.: *See—*

Arnold, Jones B.; Steger, Philip J.; and Wright, Ralph R., 4,374,002, Cl. 204-7.000.

Steigerwald, Robert L.; and Park, John N., to General Electric Company. Electrically isolated battery charger for on-board electric vehicle applications. 4,374,355, Cl. 320-43.000.

Stein, Bernard; Keramaty, Hamid; and Brickus, Romas A., to Instrumentation Laboratory Inc. Cuvette assembly. 4,373,812, Cl. 356-246.000.

Steiner, Ulrich A.: *See—*

Berger, Mitchell H.; Maresca, Louis M.; and Steiner, Ulrich A., 4,374,239, Cl. 528-176.000.

Steinhilber, Gerhard: *See—*

Bitzer, Eberhard; Aichinger, Wilhelm; and Steinhilber, Gerhard, 4,374,006, Cl. 204-43.00G.

Steiniger, Wolfgang, to Hauni-Werke Korber & Co. KG. Method and apparatus for forming a stream from several types of tobacco. 4,373,538, Cl. 131-109.00R.

Stellman, Richard G.: *See—*

Trevino, Cesar A.; and Stellman, Richard G., 4,374,020, Cl. 208-216.00R.

Stenberg, Kaj O.; Traven, Lars J. C.; Losell, Ingvar F.; and Johnsson, Bo A., to Gambro Heart-Lung Products AB. Apparatus for the transfer of one or more substances between a gas and a liquid. 4,374,088, Cl. 422-46.000.

Stephan, James E.; Boduch, Paul A.; and Elverum, John A., to Coors Porcelain Company. Method for making cast epoxy resin bodies and epoxy formulation therefor. 4,374,076, Cl. 264-19.000.

Sterling Drug Inc.: *See—*

Dembinski, Joan R., 4,374,132, Cl. 424-241.000.

Jarcho, Michael, 4,374,124, Cl. 424-54.000.

Lesher, George Y.; Opalka, Chester J., Jr.; and Page, Donald F., 4,374,141, Cl. 424-266.000.

Philion, Richard E., 4,374,149, Cl. 424-330.000.

Stern, Roger A.: *See—*

Hill, Bruce C.; and Stern, Roger A., 4,373,532, Cl. 128-660.000.

Steuerwald, Alfred: *See—*

Baldwin, John J.; Ponticello, Gerald S.; Vickers, Stanley; and Steuerwald, Alfred, 4,374,140, Cl. 424-263.000.

Stewart, James A., to GTE Automatic Electric Laboratories, Inc. Power supply control circuit for subscriber carrier telephone system. 4,374,303, Cl. 179-2.0BC.

Stewart-Warner Corporation: *See—*

Ponczek, George M., 4,373,398, Cl. 73-738.000.

Steyr-Daimler-Puch Aktiengesellschaft: *See—*

Resele, Peter; and Haslinger, Manfred, 4,373,741, Cl. 280-279.000.

Stillman, Lee E.; and Coughlin, Thomas G., to United States of America, Navy. Deployable support structure for spacecrafts. 4,373,690, Cl. 244-173.000.

Stocker, Eberhard: *See—*

Morsbach, Martin; Stecher, Friedhelm; and Stocker, Eberhard, 4,373,735, Cl. 277-235.00B.

Stoesz, James D.: *See—*

Errede, Louis A.; Stoesz, James D.; and Winter, George D., deceased, 4,373,519, Cl. 128-156.000.

Stone, Eugene M., to Penelizer Corporation. Process and composition for use in recycling of old asphalt pavements. 4,373,961, Cl. 106-281.00R.

Stone, Herman; Pauly, Peter D.; and Pcolinsky, Michael P., Jr., to G.F.C. Foam Corporation. Intumescent flexible polyurethane foam. 4,374,207, Cl. 521-107.000.

Stone, James D.: *See—*

Hunter, Don L.; Woods, William G.; Stone, James D.; and Le-Fevre, Cecil W., 4,374,271, Cl. 564-310.000.

Stout, Christopher B.: *See—*

Olson, Gene E.; Thompson, Jerome A.; Grover, Donald D.; Stout, Christopher B.; Becker, Thomas P.; and Kaufman, Glenn A., 4,373,384, Cl. 73-119.00A.

Stratichuk, Joseph. In-ground trailer post assembly. 4,373,303, Cl. 52-40.000.

Strattan, John K.: *See—*

Roper, Charles R., Jr.; Strattan, John K.; Hetherington, Roy, Jr.; and Hiller, Austin J., 4,373,967, Cl. 148-2.000.

Stricklen, Phil M.; and Hogan, John P., to Phillips Petroleum Company. Small amounts of aluminum alkyl or dihydrocarbyl magnesium in slurry olefin polymerization. 4,374,234, Cl. 526-105.000.

Stricklin, Hazel R.; and Morrow, George W., Jr., to Daubert Industries, Inc. Composition and sheet materials for inhibiting corrosion of metals. 4,374,174, Cl. 428-341.000.

Stroz, John J.; and Mackay, Donald A. M., to Nabisco Brands, Inc. Method of reducing dental caries. 4,374,122, Cl. 424-48.000.

Strupczewski, Kenneth. Heating, ventilating and air conditioning system with reversible air flow. 4,373,576, Cl. 165-48.00R.

Stuchebnikov, Vladimir M.: *See—*

Beloglazov, Alexei V.; Beiden, Vladimir E.; Iordan, Georgy G.; Karneev, Vladimir M.; Papkov, Vladimir S.; Stuchebnikov, Vladimir M.; Khasikov, Viktor V.; and Surovikov, Mikhail V., 4,373,399, Cl. 73-777.000.

Stuermer, Walter L.: *See—*

Harding, Robert R.; and Stuermer, Walter L., 4,373,232, Cl. 17-11.000.

Stumbaugh, Leo F. Two wheel roller skate. 4,373,736, Cl. 280-11.230.

Sturtz, John P.: *See—*

Terhune, James H.; Sturtz, John P.; and Neissel, John P., 4,373,375, Cl. 73-19.000.

Stutz, Hansruedi, to Loepfe Brothers Limited. Equipment for continuously measuring the length of an endless material being wound up into a circular package. 4,373,266, Cl. 33-129.000.

Suda, Masashi; and Kanbe, Junichiro, to Canon Kabushiki Kaisha. Developing apparatus. 4,373,468, Cl. 118-658.000.

Sueddeutsche Kuehlerfabrik Julius Fr. Behr GmbH & Co. KG: *See—*

Dietzsch, Kurt, 4,373,665, Cl. 237-12.30A.

Sugitani, Masami: *See—*

Sakamoto, Yukio; Tanaka, Tetsuo; Kuboto, Masaaki; and Sugitani, Masami, 4,374,369, Cl. 333-182.000.

Sugiura, Yoji: *See—*

Shimada, Fumio; and Sugiura, Yoji, 4,373,797, Cl. 354-234.000.

Sugiyama, Matuyosi: *See—*

Morishita, Teru; Sugiyama, Matuyosi; Sato, Akira; and Suzuki, Toshikazu, 4,373,673, Cl. 239-703.000.

Sullivan, William A.: *See—*

Dahlgren, Harold P.; Sullivan, William A.; Gardiner, John W.; and Taylor, James E., 4,373,442, Cl. 101-207.000.

Sumitomo Electric Industries, Ltd.: *See—*

Saito, Nobuyuki; and Saito, Hiroshi, 4,374,377, Cl. 340-384.00E.

Sumitomo Metal Industries, Ltd.: *See—*

Tachimoto, Kazuo; and Tanoue, Toyosuke, 4,373,883, Cl. 425-8.000.

Sumitomo Metal Mining Co., Ltd.: *See—*

Iio, Toshimasa; and Ohkubo, Toyokazu, 4,374,098, Cl. 423-27.000.

Sumitomo Precision Products Co. Ltd.: *See—*

Nakamura, Masakazu, 4,373,243, Cl. 29-157.30D.

Summers, Stephen E.: *See—*

McGregor, Charles W.; and Summers, Stephen E., 4,374,221, Cl. 524-94.000.

Sunfilter S.r.l.: *See—*

Lancellotti, Enrico, 4,373,568, Cl. 160-184.000.

Sunset Ltd.: *See—*

Guibert, Raul, 4,374,319, Cl. 219-400.000.

Surovikov, Mikhail V.: *See—*

Beloglazov, Alexei V.; Beiden, Vladimir E.; Iordan, Georgy G.; Karneev, Vladimir M.; Papkov, Vladimir S.; Stuchebnikov,

Vladimir M.; Khasikov, Viktor V.; and Surovikov, Mikhail V., 4,373,399, Cl. 73-777.000.

Sutherland, George K.; and Thielen, Thomas J., to Sys-Tec, Inc. Instrument zeroing circuit. 4,374,362, Cl. 328-162.000.

Suzuki, Tadashi: *See—*

Kato, Shinichi; Tsuda, Hiroshi; Yamaki, Kiyoshi; Suzuki, Tadashi; and Kuwano, Fumiyoshi, 4,374,310, Cl. 200-61.540.

Suzuki, Toshikazu: *See—*

Morishita, Teru; Ishioka, Yoshimichi; and Suzuki, Toshikazu, 4,373,672, Cl. 239-703.000.

Morishita, Teru; Sugiyama, Matuyosi; Sato, Akira; and Suzuki, Toshikazu, 4,373,673, Cl. 239-703.000.

Suzuki, Tsutai: *See—*

Yoshioka, Nobuyuki; Suzuki, Tsutai; Haba, Masanori; and Koyama, Hideo, 4,374,160, Cl. 427-101.000.

Svoboda, Josef, to TMC Corporation. Ski binding part. 4,373,742, Cl. 280-633.000.

Swanson, William C., to International Harvester Co. Hydraulic drive for an agricultural sprayer. 4,373,669, Cl. 239-124.000.

Swartz, William M., to Embosograph Display Mfg. Co. Advertising simulated neon sign display. 4,373,283, Cl. 40-564.000.

Sweet, Roger H.: *See—*

Douglas, Raymond J.; May, Herbert; Poznick, Jeffrey B.; and Sweet, Roger H., 4,373,289, Cl. 46-1.00R.

Swiss Aluminium Ltd.: *See—*

Schepers, Bernhard; Nobbe, Volker; Schroder, Bernd; Borer, Werner; and Kullack, Manfred, 4,374,119, Cl. 423-625.000.

Sybron Corporation: *See—*

Leiberich, Hermann, 4,373,699, Cl. 251-139.000.

Sys-Tec, Inc.: *See—*

Sutherland, George K.; and Thielen, Thomas J., 4,374,362, Cl. 328-162.000.

Szydlek, Nicholas P.: *See—*

Dorosz, Adolph S.; Kirwan, Patrick N.; and Szydlek, Nicholas P., 4,373,458, Cl. 112-121.120.

T. Y. Lin International: *See—*

Lin, Tung-Yen; and Chow, Philip Y., 4,373,837, Cl. 405-218.000.

Tachimoto, Kazuo; and Tanoue, Toyosuke, to Ishikawajima-Harima Jukogyo Kabushiki Kaisha; and Sumitomo Metal Industries, Ltd. Apparatus for producing granules from molten metallurgical slags. 4,373,883, Cl. 425-8.000.

Taira, Tadaaki; Ishihara, Toshio; and Takehara, Junichiro, to Nippon Kokan Kabushiki Kaisha. Up-set shrinker for producing thick wall steel pipe. 4,373,365, Cl. 72-52.000.

Takagi, Toshinori, to Futaba Denshi Kogyo Kabushiki Kaisha. Thin-film deposition. 4,374,162, Cl. 427-248.100.

Takahashi, Kunio: *See—*

Shibata, Shoji; Kumagai, Akira; Harada, Masatoshi; Yano, Singo; Saito, Hiroshi; and Takahashi, Kunio, 4,374,284, Cl. 568-817.000.

Takahashi, Tatsuo, to RCA Corporation. Method for preparing divalent-europium-activated calcium sulfide phosphors. 4,374,037, Cl. 252-301.40S.

Takahashi, Yutaka: *See—*

Matsuura, Tsuyoshi; Fujiwara, Hiroshi; Aihara, Mamoru; Takahashi, Yutaka; and Nakajima, Yoshio, 4,373,796, Cl. 354-173.000.

Takai, Kazuki, to Clarion Co., Ltd. Tape player. 4,374,401, Cl. 360-96.500.

Takaishi, Naotake: *See—*

Fujikura, Yoshiaki; Inamoto, Yoshiaki; Takaishi, Naotake; and Nakajima, Motoki, 4,374,052, Cl. 252-522.00R.

Takamatsu, Toshiaki: *See—*

Nonomura, Keisaku; Takamatsu, Toshiaki; Uede, Hisashi; and Wada, Tomio, 4,373,784, Cl. 350-336.000.

Takaya, Sueji: *See—*

Negishi, Hideo; Goto, Kaoru; and Takaya, Sueji, 4,373,839, Cl. 408-59.000.

Takayama, Syuichi, to Olympus Optical Co., Ltd. Electronic flash apparatus. 4,374,345, Cl. 315-241.00P.

Takeda Chemical Industries, Ltd.: *See—*

Yamamoto, Masaki, 4,373,888, Cl. 425-149.000.

Takeda Riken Kogyo Kabushiki Kaisha: *See—*

Hirose, Masaaki, 4,374,358, Cl. 324-78.00D.

Takehara, Junichiro: *See—*

Taira, Tadaaki; Ishihara, Toshio; and Takehara, Junichiro, 4,373,365, Cl. 72-52.000.

Takekawa, Hiroshi, to Olympus Optical Company Limited. Method of measuring agglutinating reaction and a reaction vessel therefor. 4,373,931, Cl. 436-539.000.

Takeuchi, Kiyoshi: *See—*

Fujishiro, Takeshi; Takeuchi, Kiyoshi; and Kita, Toru, 4,373,378, Cl. 73-35.000.

Takizawa, Junichi; and Satoh, Nobuo, to Fuji Jukogyo Kabushiki Kaisha. Passive safety belt device. 4,373,747, Cl. 280-802.000.

Takusagawa, Takashi: *See—*

Hirakawa, Hiroshi; Sato, Akio; Takusagawa, Takashi; and Ikeda, Nobumasa, 4,373,566, Cl. 152-353.00G.

Talamona, Enrico: *See—*

Gandini, Giovanni; and Talamona, Enrico, 4,373,884, Cl. 425-126.00R.

Talroze, Viktor L.: *See—*

Gorelik, Rudolf A.; Dukhovskoi, Evgeny A.; Kleiman, Alexandr M.; Kleimenov, Nikolai A.; Markevich, Andrei M.; Ponomarev, Ardalion N.; Silin, Askold A.; Skok, Valentina M.; Talroze, Viktor L.; Khomyakov, Anatoly V.; and Lyapunov, Andrei Y., 4,374,180, Cl. 428-421.000.

Tamura, Muneo. Method producing steam-like fumes for toy engine. 4,374,038, Cl. 252-305.000.

Tamura, Takeo: *See—*

Shimura, Kiichiro; Tamura, Takeo; Kido, Takayoshi; Hara, Hiroshi; and Tanaka, Morimasa, 4,374,348, Cl. 318-443.000.

Tamura, Yasuo: *See—*

Miyake, Kanichi; Tokuda, Masahiro; Aoki, Takaaki; Miyakawa, Hideaki; and Tamura, Yasuo, 4,374,217, Cl. 524-47.000.

Tamura, Yasuyuki: *See—*

Kuge, Tsukasa; Matsumoto, Toru; Watanabe, Tsuyoshi; and Tamura, Yasuyuki, 4,373,469, Cl. 118-652.000.

Tanaka, Koji, to Japan Exlan Co., Ltd. Novel water-swellable fibers and process for producing the same. 4,374,175, Cl. 428-369.000.

Tanaka, Kojiro: *See—*

Inami, Nobuo; and Tanaka, Kojiro, 4,374,332, Cl. 307-304.000.

Tanaka, Kyoji: *See—*

Nakaso, Yasuji; Tanaka, Kyoji; and Kawamoto, Hiromi, 4,374,108, Cl. 423-301.000.

Tanaka, Morimasa: *See—*

Shimura, Kiichiro; Tamura, Takeo; Kido, Takayoshi; Hara, Hiroshi; and Tanaka, Morimasa, 4,374,348, Cl. 318-443.000.

Tanaka, Taro; Sasaya, Hideaki; and Inagaki, Mitsuo, to Nippon Soken, Inc. Through-vane type rotary compressor with cylinder chamber of improved shape. 4,373,880, Cl. 418-150.000.

Tanaka, Tetsuo: *See—*

Sakamoto, Yukio; Tanaka, Tetsuo; Kuboto, Masaaki; and Sugitani, Masami, 4,374,369, Cl. 333-182.000.

Tandy Corporation: *See—*

Haagen, Peter H.; and Kline, Christopher R., 4,374,307, Cl. 179-84.00T.

Tanifuji, Shinya: *See—*

Tanimoto, Sunao; Tanifuji, Shinya; and Morooka, Yasuo, 4,373,364, Cl. 72-8.000.

Taniguchi, Nobuyuki; and Yuasa, Yoshio, to Minolta Camera Co., Ltd. Light measuring device for flash photography. 4,373,793,. Cl. 354-31.000.

Taniguchi, Takashi; and Mibae, Jiro, to Toray Industries, Inc. Process for producing transparent shaped article having enhanced anti-reflective effect. 4,374,158, Cl. 427-41.000.

Tanimoto, Sunao; Tanifuji, Shinya; and Morooka, Yasuo, to Hitachi, Ltd. Method of controlling the temperature of a heating furnace. 4,373,364, Cl. 72-8.000.

Tanoue, Toyosuke: *See—*

Tachimoto, Kazuo; and Tanoue, Toyosuke, 4,373,883, Cl. 425-8.000.

Tao, John C. C., to Air Products and Chemicals, Inc. Method for producing upgraded products from a heavy oil feed. 4,374,018, Cl. 208-112.000.

Tarkett AB: *See—*

Bondoc, Alfredo A., 4,373,992, Cl. 162-145.000.

Tarrer, Arthur R.; and Shridharani, Ketan G., to Air Products and Chemicals, Inc. Process for hydrogenating coal and coal solvents. 4,374,016, Cl. 208-10.000.

Tatsumi, Aritaka, to Hitachi Cable, Ltd. Machine for forming spiral grooves in metal pipe inner surface. 4,373,366, Cl. 72-75.000.

Tay, Kay-Kiong, to Lord Corporation. Resilient sealing compositions. 4,374,218, Cl. 524-86.000.

Taylor, Glenn E. Tie butt handler. 4,373,856, Cl. 414-470.000.

Taylor, James E.: *See—*

Dahlgren, Harold P.; Sullivan, William A.; Gardiner, John W.; and Taylor, James E., 4,373,442, Cl. 101-207.000.

Taylor, Richard J.: *See—*

Igoe, Robert S.; and Taylor, Richard J., 4,374,155, Cl. 426-569.000.

Teche, Andre: *See—*

Martel, Jacques; Tessier, Jean; and Teche, Andre, 4,374,257, Cl. 549-302.000.

Technische Hogeschool Eindhoven: *See—*

Vogten, Leonardus L. M.; and Willems, Leonardus F., 4,374,302, Cl. 179-1.0SM.

Tecnologia Argentina S.A.: *See—*

Soto, Eduardo R. R., 4,373,565, Cl. 145-36.000.

Teege, Gernot: *See—*

Horner, Michael; and Teege, Gernot, 4,374,258, Cl. 549-407.000.

Teepak, Inc.: *See—*

Wright, Norbert L.; and Selusnik, Jerome A., 4,373,648, Cl. 223-28.000.

Tekippe, Vincent J.; and Lach, Lawrence E., to Gould Inc. Photoluminescent indicator. 4,374,328, Cl. 250-458.100.

Teledyne Industries, Inc.: *See—*

Hanson, Timothy A.; and Smith, David W., 4,373,887, Cl. 425-143.000.

Petrovic, John E.; and Trenary, John, 4,374,354, Cl. 320-2.000.

Temple, Chester S.: *See—*

Hsu, Ed C.; Moore, L. Dow; and Temple, Chester S., 4,374,177, Cl. 428-392.000.

Temple, Victor A. K., to General Electric Company. High breakdown voltage semiconductor device. 4,374,389, Cl. 357-13.000.

Tennant Company: *See—*

Kimzey, Paul W.; and Frederick, Sherman B., 4,373,227, Cl. 15-347.000.

Tenneco Chemicals, Inc.: *See—*

Deinet, Adolph J.; and Woods, William B., 4,373,953, Cl. 106-16.000.

Goodman, Donald; Ceprini, Mario Q.; Hoch, Samuel; and Koral, Marvin, 4,374,057, Cl. 252-426.000.

Tenneco Inc.: *See—*
Martini, Alfred R. G., 4,373,329, Cl. 60-305.000.
Terhune, James H.; Sturtz, John P.; and Neissel, John P., to General Electric Company. Hydrogen sensor. 4,373,375, Cl. 73-19.000.
Teroson GmbH: *See—*
Schwarz, Herwig. J.; Burde, Hans-Jurgen H.; and Minet, Gunter, 4,374,172, Cl. 428-308.400.
Terumo Corporation: *See—*
Kobayashi, Susumu, 4,373,525, Cl. 128-214.00E.
Tessier, Jean: *See—*
Martel, Jacques; Tessier, Jean; and Teche, Andre, 4,374,257, Cl. 549-302.000.
Tews, Richard R.: *See—*
Lilaonitkul, Amnuey; and Tews, Richard R., 4,373,529, Cl. 128-285.000.
Texaco Development Corporation: *See—*
McEntire, Edward E., 4,374,259, Cl. 549-518.000.
Texaco Inc.: *See—*
Cavitt, Stanley B., 4,374,260, Cl. 549-534.000.
Lin, Jiang-Jen; and Knifton, John F., 4,374,285, Cl. 568-902.000.
Texas Instruments Incorporated: *See—*
Herrmann, Carlo L.; and Ott, Granville E., 4,374,395, Cl. 358-22.000.
McElroy, David J., 4,373,248, Cl. 29-571.000.
Th. Goldschmidt AG: *See—*
Buttner, Gunter; Domazer, Hans-Gunter; and Eggert, Horst, 4,373,947, Cl. 75-0.5BB.
Thebert, Glenn W., to General Motors Corporation. Unison ring support system. 4,373,859, Cl. 415-159.000.
Thelen, Alfred J., to Optical Coating Laboratory, Inc. Non-polarizing thin film edge filter. 4,373,782, Cl. 350-166.000.
Thermal Engineering of Arizona, Inc.: *See—*
Kaufmann, Richard O., 4,373,572, Cl. 165-1.000.
Thielen, Thomas J.: *See—*
Sutherland, George K.; and Thielen, Thomas J., 4,374,362, Cl. 328-162.000.
Thiokol Corporation: *See—*
Bertozzi, Eugene R., 4,374,142, Cl. 424-270.000.
Gallagher, John P.; and Dougherty, Philip H., 4,374,211, Cl. 523-156.000.
Thomassen & Drijver-Verblifa NV: *See—*
Heijting, Hendrik G., 4,373,368, Cl. 72-344.000.
Thompson, Hugh B.: *See—*
Washburn, William J.; Thompson, Hugh B.; and La Fever, Clifford E., 4,373,422, Cl. 89-33.0CA.
Thompson, Jerome A.: *See—*
Olson, Gene E.; Thompson, Jerome A.; Grover, Donald D.; Stout, Christopher B.; Becker, Thomas P.; and Kaufman, Glenn A., 4,373,384, Cl. 73-119.00A.
Thompson, Thomas D.; Gergel, John F.; and Economou, Peter, to Yara Engineering Corporation. Stable clay slurries. 4,374,203, Cl. 501-148.000.
Thomson-CSF: *See—*
Dubroeucq, Georges; Lacombat, Michel; and Brevignon, Michele, 4,373,774, Cl. 350-6.600.
Forterre, Gerard, 4,374,367, Cl. 333-24.100.
Lacombat, Michel; Pircher, Georges; and LeFevre, Herve, 4,373,814, Cl. 356-350.000.
Thorneburg, James L. Ski sock with integrally knit thickened fabric areas. 4,373,361, Cl. 66-178.00R.
Thorner, Benjamin C.: *See—*
Biller, Cleveland J.; and Thorner, Benjamin C., 4,373,853, Cl. 414-732.000.
Thubeauville, Heinz: *See—*
Mertens, Walter; Thubeauville, Heinz; and Glittenberg, Wilhelm, 4,373,244, Cl. 29-402.080.
Tiedemann, Herman H., to Chemetics International Ltd. Making calcium hypochlorite from impure lime. 4,374,115, Cl. 423-474.000.
Tielemans, Peter A. W.; and Jacobs, Cornelis A. J., to U.S. Philips Corporation. High-pressure sodium vapor discharge lamp. 4,374,339, Cl. 313-218.000.
Tilton, Frederick T.: *See—*
Silberman, Raphael J.; Tilton, Frederick T.; Smith, Everett H.; and Wichkoski, Dennis A., 4,373,584, Cl. 166-117.700.
Timbrook, Robert L. Golf club shaft and method of making the same. 4,374,315, Cl. 219-121.0LD.
Tipper, Derrick W., to Imperial Group Limited. Dynamic timing of rotating or reciprocating machine parts. 4,373,806, Cl. 356-23.000.
Tipton, Ann B.; and Crosby, Alan C., to Occidental Research Corporation. Process for reducing the hydrogen sulfide content in geothermal steam. 4,374,106, Cl. 423-231.000.
Titan Kogyo K.K.: *See—*
Uenishi, Toshiaki; Harada, Hidefumi; Sasaki, Katumasa; Akagi, Akio; and Yamasaki, Takanori, 4,373,963, Cl. 106-304.000.
Tkac, Frank S. Clock with selective visual alarm indicators. 4,373,822, Cl. 368-256.000.
TMC Corporation: *See—*
Svoboda, Josef, 4,373,742, Cl. 280-633.000.
Tobacco Machinery Co. of Ky. Inc.: *See—*
Jones, Thomas F., 4,373,323, Cl. 56-27.500.
Toda, Haruhiko; Higo, Moriaki; Saga, Hitoshi; and Shinbo, Masafu, to Lion Corporation. Process for preparing α-thujene. 4,374,292, Cl. 585-360.000.
Toellner, Robert L., to Halliburton Company. Apparatus and method for radio frequency heating of hydrocarbonaceous earth formations including an impedance matching technique. 4,373,581, Cl. 166-53.000.
Togo, Hiroshi: *See—*
Tsuchiya, Takuichi; and Togo, Hiroshi, 4,374,346, Cl. 315-276.000.
Tojza, Roman A.: *See—*
Hooker, Donald E.; and Tojza, Roman A., 4,373,727, Cl. 273-143.00R.
Tokuda, Masahiro: *See—*
Miyake, Kanichi; Tokuda, Masahiro; Aoki, Takaaki; Miyakawa, Hideaki; and Tamura, Yasuo, 4,374,217, Cl. 524-47.000.
Tokunaga, Kazuyoshi: *See—*
Mukoh, Akio; Morishita, Hirosada; Anzai, Masayasu; Tokunaga, Kazuyoshi; and Kikuchi, Yasuo, 4,374,191, Cl. 430-100.000.
Tokyo Shibaura Denki Kabushiki Kaisha: *See—*
Hashimoto, Masaru, 4,374,356, Cl. 323-273.000.
Hashimoto, Shinichi, 4,373,714, Cl. 271-310.000.
Iinuma, Kazuhiro, 4,373,533, Cl. 128-663.000.
Tol-O-Matic, Inc.: *See—*
Garlapaty, Venkat R.; Hall, Michael J.; and Branham, William C., 4,373,427, Cl. 92-88.000.
Tomita, Takao; Yamamoto, Hitoshi; Enoki, Shigenaga; Goto, Isamu; and Hashimoto, Takeshi, to Honda Giken Kogyo Kabushiki Kaisha. Power unit suspension system for motorcycles. 4,373,602, Cl. 180-227.000.
Tomy Kogyo Co., Inc.: *See—*
Kakizaki, Katsumi; and Kozuka, Michihiro, 4,373,293, Cl. 46-206.000.
Tone, Masatsugu: *See—*
Itatani, Hiroshi; Tone, Masatsugu; and Kurohara, Kazuaki, 4,373,597, Cl. 180-70.0MS.
Topliffe, Roger O., to United States of America, Army. Canard drive mechanism latch for guided projectile. 4,373,688, Cl. 244-3.240.
Toray Industries, Inc.: *See—*
Taniguchi, Takashi; and Mibae, Jiro, 4,374,158, Cl. 427-41.000.
Torborg, Ralph H., to Honeywell Inc. Open draft hood furnace control using induced draft blower and exhaust stack flow rate sensing. 4,373,897, Cl. 431-20.000.
Tosco Corporation: *See—*
Barney, John H., 4,374,017, Cl. 208-11.00R.
Toshin Seiko Kabushiki Kaisha: *See—*
Date, Takasaburo; Maki, Toshimichi; Iguchi, Mitsuya; Iwamaru, Sumifusa; and Watanabe, Hisashi, 4,373,911, Cl. 432-152.000.
Totai Co., Ltd.: *See—*
Mano, Tetsuro, 4,373,231, Cl. 17-1.00F.
Toyo Seikan Kaisha, Ltd.: *See—*
Kishida, Nobuhiro; Shishido, Kunihiro; and Haryu, Satoshi, 4,373,891, Cl. 425-174.400.
Toyoda, Kazuhiro: *See—*
Ono, Chikai; and Toyoda, Kazuhiro, 4,374,431, Cl. 365-174.000.
Toyota Jidosha Kogyo Kabushiki Kaisha: *See—*
Morishita, Teru; Ishioka, Yoshimichi; and Suzuki, Toshikazu, 4,373,672, Cl. 239-703.000.
Morishita, Teru; Sugiyama, Matuyosi; Sato, Akira; and Suzuki, Toshikazu, 4,373,673, Cl. 239-703.000.
Trade Finance International: *See—*
Sorensen, Jens O., 4,373,339, Cl. 60-649.000.
Trane CAC, Inc.: *See—*
Sawyer, George N., 4,373,354, Cl. 62-238.600.
Stamp, Custis L., Jr.; Herzog, Rollie R.; and Brennan, Michael A., 4,373,351, Cl. 62-160.000.
Traven, Lars J. C.: *See—*
Stenberg, Kaj O.; Traven, Lars J. C.; Losell, Ingvar F.; and Johnsson, Bo A., 4,374,088, Cl. 422-46.000.
Traxler, Peter, to Ciba-Geigy Corporation. Antibiotically active aminopapulacandin derivatives. 4,374,129, Cl. 424-180.000.
Treheux, Michel: *See—*
Gouronnec, Alain; Regreny, Andre; and Treheux, Michel, 4,373,943, Cl. 65-10.100.
Trenary, John: *See—*
Petrovic, John E.; and Trenary, John, 4,374,354, Cl. 320-2.000.
Trenbeath, Steven L.; Novak, Robert W.; and Feldman, Allan M., to American Cyanamid Company. Method for drying isocyanic acid. 4,374,107, Cl. 423-265.000.
Treutelaar, Edward J. Helmet mounted constant tension traction device. 4,373,523, Cl. 128-207.180.
Trevino, Cesar A.; and Stellman, Richard G., to Shell Oil Company. Catalytic hydroconversion process with catalyst retainer. 4,374,020, Cl. 208-216.00R.
Triba, James T.: *See—*
Goodman, Robert B.; and Triba, James T., 4,373,544, Cl. 137-220.000.
Trico Products Incorporated: *See—*
Goudreau, Noel; Colevris, Nick; and Southard, Carl, 4,373,211, Cl. 2-2.000.
Tricon, Alfred J. Supportive angle holding means and structure clamping means for storage devices. 4,373,639, Cl. 211-86.000.
Trocciola, John C.: *See—*
Powers, Joseph; Trocciola, John C.; and Martin, Ronald G., 4,374,185, Cl. 429-36.000.
Trouillet, Georges: *See—*
Mantelle, Jean; and Trouillet, Georges, 4,373,750, Cl. 285-55.000.
Trowbridge, Robert H., Jr.: *See—*
Lombardi, John P.; Hult, Tore M.; and Trowbridge, Robert H., Jr., 4,373,720, Cl. 273-29.00A.

Tsigdinos, George A.: *See—*
Sebenik, Roger F.; Hallada, Calvin J.; Barry, Henry F.; and Tsigdinos, George A., 4,374,100, Cl. 423-56.000.
Tsuchiya, Takuichi; and Togo, Hiroshi, to Nippon Electric Co., Ltd. Voltage detection circuits for a-c power supplies. 4,374,346, Cl. 315-276.000.
Tsuda, Hiroshi: *See—*
Kato, Shinichi; Tsuda, Hiroshi; Yamaki, Kiyoshi; Suzuki, Tadashi; and Kuwano, Fumiyoshi, 4,374,310, Cl. 200-61.540.
Tsukada, Shusei; and Kurosaki, Yasuhide, to Canon Kabushiki Kaisha. Developing device with shutter blade. 4,373,798, Cl. 355-3.0DD.
Tsutsumi, Masato, to Maui Land & Pineapple Company, Inc. Top and butt trimmer for pineapples. 4,373,432, Cl. 99-542.000.
Tuong, Duc L.: *See—*
Bienvenu, Jacques; Carre, Claude; Tuong, Duc L.; and Verdier, Henri, 4,374,409, Cl. 364-200.000.
Turner, Clarence C.: *See—*
Crawford, John P., 4,373,831, Cl. 403-318.000.
Tusinski, Joseph; and Hill, Phillip D., to Coburn Optical Industries, Inc. Automatic edge beveller for removing the sharp peripheral edges of ophthalmic lenses. 4,373,298, Cl. 51-105.0LG.
Tustin, Gerald C.: *See—*
Larkins, Thomas H.; Polichnowski, Stanley W.; Tustin, Gerald C.; and Young, David A., 4,374,070, Cl. 260-549.000.
Tuttrup, Gene J. Drum apparatus. 4,373,419, Cl. 84-411.00R.
Tyke, Charles R.: *See—*
Wolters, Richard H.; Anderson, William C.; Tyke, Charles R.; and Schreiner, Charles P., 4,373,642, Cl. 220-72.000.
Tyler Refrigeration Corporation: *See—*
Ibrahim, Fayez; and Bowman, Edward, 4,373,348, Cl. 62-115.000.
Tyree, Lewis, Jr.; and Fischer, Harry C. Ice-making and water-heating. 4,373,345, Cl. 62-79.000.
Tyszkiewicz, Theodore J.: *See—*
Boden, Richard M.; and Tyszkiewicz, Theodore J., 4,374,276, Cl. 568-398.000.
Uchikuga, Saburo: *See—*
Osawa, Yasuko; and Uchikuga, Saburo, 4,374,247, Cl. 548-146.000.
Ueda, Setsuo; Yasuda, Takashi; Yamada, Tokuyoshi; and Kobayashi, Shigeki, to Sato Technical Research Laboratory Ltd.; and Itoh Metal Abrasive Co., Ltd. Process for producing fibers with a specially fixed size from melts. 4,374,074, Cl. 264-8.000.
Uede, Hisashi: *See—*
Nonomura, Keisaku; Takamatsu, Toshiaki; Uede, Hisashi; and Wada, Tomio, 4,373,784, Cl. 350-336.000.
Uenishi, Toshiaki; Harada, Hidefumi; Sasaki, Katumasa; Akagi, Akio; and Yamasaki, Takanori, to Titan Kogyo K.K. Lustrous pigment and process for producing same. 4,373,963, Cl. 106-304.000.
Ueno, Takashi: *See—*
Kawano, Yoshihiko; Adachi, Hirosi; Watanuki, Masakazu; and Ueno, Takashi, 4,373,679, Cl. 241-275.000.
Ulin, Roy A.; Foley, Ted; and Shah, Hasmukh, to Akzona Incorporated. Used surgical sharps container with re-usable magnetic base. 4,373,629, Cl. 206-350.000.
Ulrich, Bohdan, to Hasler AG Bern. Electrical connector. 4,373,764, Cl. 339-75.0MP.
UMC Industries, Inc.: *See—*
Gilliom, John W., 4,374,318, Cl. 219-400.000.
Kilwin, Thomas C., 4,373,923, Cl. 464-36.000.
Ungarean, Gary L.: *See—*
Yarwood, John C.; Gaule, Gerhart K.; and Ungarean, Gary L., 4,373,571, Cl. 164-467.000.
Union Carbide Corporation: *See—*
Atkins, Kenneth E., 4,374,215, Cl. 523-514.000.
Ausikaitis, Joseph P.; and Garg, Desh R., 4,373,935, Cl. 55-33.000.
Berger, Mitchell H.; Mayer, Walter P.; and Ward, Robert J., 4,374,237, Cl. 528-28.000.
Berger, Mitchell H.; Maresca, Louis M.; and Steiner, Ulrich A., 4,374,239, Cl. 528-176.000.
Bryant, David R.; and Galley, Richard A., 4,374,278, Cl. 568-454.000.
Faulring, Gloria M.; Fitzgibbon, Alan; and Slish, Frank, 4,373,948, Cl. 75-57.000.
Fuderer, Andrija, 4,374,022, Cl. 208-310.00Z.
Kulkarni, Ravindra D.; and Goodard, Errol D., 4,374,178, Cl. 428-404.000.
Michie, William J., Jr., 4,374,227, Cl. 524-528.000.
Pelton, John F., 4,373,704, Cl. 266-225.000.
Spruell, Jerry V.; and Lewis, Jennings B., III, 4,373,949, Cl. 75-60.000.
Union Special Corporation: *See—*
Parker, William R.; and Gosche, Matt J., 4,373,460, Cl. 112-162.000.
Uniscrew Limited: *See—*
Zimmern, Bernard, 4,373,866, Cl. 417-53.000.
United States Borax & Chemical Corporation: *See—*
Hunter, Don L.; Woods, William G.; Stone, James D.; and LeFevre, Cecil W., 4,374,271, Cl. 564-310.000.
United States of America
Administrator, National Aeronautics and Space Administration: *See—*
Deadmore, Daniel L.; and Young, Stanley G., 4,374,183, Cl. 428-641.000.
Agriculture: *See—*
Biller, Cleveland J.; and Thorner, Benjamin C., 4,373,853, Cl. 414-732.000.
Air Force: *See—*
Goronkin, Herbert, 4,373,255, Cl. 29-580.000.
Army: *See—*
Christe, Karl O.; and Wilson, William W., 4,374,112, Cl. 423-351.000.
Drzewiecki, Tadeusz M., 4,373,553, Cl. 137-840.000.
Orlando, Michael D.; and Riley, Jean M., 4,374,201, Cl. 435-239.000.
Pell, Kynric M.; and Conard, Robert G., 4,373,808, Cl. 356-152.000.
Reiss, Edward H., Jr., 4,374,091, Cl. 422-114.000.
Rothwarf, Frederick, 4,373,977, Cl. 156-51.000.
Topliffe, Roger O., 4,373,688, Cl. 244-3,240.
Commerce: *See—*
McCarter, Robert J., 4,374,171, Cl. 428-288.000.
Energy: *See—*
Arnold, Jones B.; Steger, Philip J.; and Wright, Ralph R., 4,374,002, Cl. 204-7.000.
Campbell, Gene K., 4,373,867, Cl. 417-90.000.
Pitrolo, Augustine A.; Mei, Joseph S.; and Shang, Jerry Y., 4,373,454, Cl. 110-347.000.
National Aeronautics and Space Administration; administrator; with respect to an invention of:
Mattauch, Robert J.; and Seabaugh, Alan C. Controlled in situ etch-back. 4,373,989, Cl. 156-635.000.
National Aeronautics and Space Administration: *See—*
Lee, Robert D., 4,374,378, Cl. 340-566.000.
Navy: *See—*
Adolph, Horst G., 4,374,241, Cl. 528-266.000.
Desai, Jaydev D., 4,374,086, Cl. 420-507.000.
Heller, Carl A.; and Murbach, Warren J., 4,374,189, Cl. 430-2.000.
Kim, Oh-Kil; and Fox, Robert B., 4,374,048, Cl. 252-500.000.
McCartney, Joseph F.; Jones, Thomas E.; and Johnson, Leopold J., 4,374,186, Cl. 429-154.000.
Smith, Robert E.; and Gormley, Donald R., 4,374,014, Cl. 204-260.000.
Stillman, Lee E.; and Coughlin, Thomas G., 4,373,690, Cl. 244-173.000.
Wattenbarger, J. Frank, 4,373,521, Cl. 128-202.130.
U.S. Philips Corporation: *See—*
Asselman, George A. A.; and Michels, Albertus P. J., 4,373,343, Cl. 62-238.600.
Bakker, Gijsbertus; and Groot, Theodorus C., 4,373,237, Cl. 445-3.000.
Bodart, Robert; and Werts, Jean-Pierre, 4,374,305, Cl. 179-16.0EA.
Bouwknegt, Albert; and Lauwerijssen, Petrus C., 4,374,340, Cl. 313-220.000.
Hemery, Jacques; and Roger, Bernard P., 4,374,364, Cl. 330-298.000.
Lux, Peter W., 4,374,419, Cl. 364-414.000.
Tielemans, Peter A. W.; and Jacobs, Cornelis A. J., 4,374,339, Cl. 313-218.000.
Van Rosmalen, Gerard E.; and Opheij, Willem G., 4,374,324, Cl. 250-201.000.
Wilting, Hermanus J. H., 4,373,251, Cl. 29-571.000.
United Technologies Corporation: *See—*
Ferris, Donald L.; and Ogle, Peter C., 4,373,862, Cl. 416-61.000.
Goodman, Robert B.; and Triba, James T., 4,373,544, Cl. 137-220.000.
Jones, Robert A., 4,373,328, Cl. 60-226.200.
Lach, Richard F.; and Calcasola, Richard W., 4,374,435, Cl. 370-13.000.
Powers, Joseph; Trocciola, John C.; and Martin, Ronald G., 4,374,185, Cl. 429-36.000.
Smith, Harvey A.; and Fleming, Joseph T., 4,373,377, Cl. 73-23.000.
Unitika Limited: *See—*
Kudo, Kazushige; Yamamoto, Shigeo; and Murase, Shigemitsu, 4,374,031, Cl. 252-8.800.
UOP Inc.: *See—*
Antos, George J., 4,374,046, Cl. 252-466.00B.
Frame, Robert R., 4,374,042, Cl. 252-412.000.
Gryskiewicz, Gregory A.; and Koehler, Raymond A., 4,374,169, Cl. 428-221.000.
Imai, Tamotsu; and Homeier, Edwin H., 4,374,287, Cl. 568-909.000.
Schmidt, Robert J., 4,374,286, Cl. 568-907.000.
Upjohn Company, The: *See—*
Ewen, James H.; McClellan, Thomas R.; McMillin, Michael H.; and Murray, Pat L., 4,374,210, Cl. 521-159.000.
Upton, Jenny, personal representative: *See—*
Errede, Louis A.; Stoesz, James D.; and Winter, George D., deceased, 4,373,519, Cl. 128-156.000.
Urban, Edward J.: *See—*
Beasley, John K.; and Urban, Edward J., 4,374,224, Cl. 524-298.000.
USAC Electronic Industrial Co., Ltd.: *See—*
Sakai, Toshihiro; and Kuhara, Tetsuji, 4,374,410, Cl. 364-200.000.
Ushimura, Shoji, to Nissan Motor Company, Limited. Exhaust gas recirculation system for internal combustion engine. 4,373,498, Cl. 123-571.000.
USM Corporation: *See—*
Dorosz, Adolph S.; Kirwan, Patrick N.; and Szydlek, Nicholas P., 4,373,458, Cl. 112-121.120.
Powderley, John; and Brookes, David J., 4,373,318, Cl. 53-540.000.
Usui, Kazuto: *See—*
Shikata, Mitsuo; and Usui, Kazuto, 4,373,480, Cl. 123-195.00A.

Utida, Masayoshi: *See—*
Ogawa, Hiroshi; Sato, Kazuhiro; Shibata, Norio; Oguri, Katsuhiko; Utida, Masayoshi; and Ono, Tsuyoshi, 4,374,433, Cl. 369-136.000.

v.Eckardstein, Karl-Ernst; Fiala, Werner; and Schwing, Friedrich, to Friedrich Wilh. Schwing, GmbH. Piping valve with a housing for the transfer of a wiper insertable in conduits that supply pressurized viscous material, preferably concrete. 4,373,225, Cl. 15-104.06A.

Vaidya, Praful D.: *See—*
Graboyes, Harold; Kasper, Thomas J.; and Vaidya, Praful D., 4,374,252, Cl. 548-343.000.

Vallourec: *See—*
Perineau, Philippe; and Lebreton, Yves, 4,373,703, Cl. 266-131.000.

Valyocsik, Ernest W.: *See—*
Rollmann, Louis D.; and Valyocsik, Ernest W., 4,374,093, Cl. 422-202.000.

van der Pot, Barend J. G., to Hollandsche Beton Groep N.V. System for generating energy using the temperature difference between the water temperature at the sea surface and the water temperature at greater depth. 4,373,338, Cl. 60-641.700.

Van Der Puy, Michael; and Piskorz, Ronald F., to Allied Corporation. Production of monofluorotrichloroethane. 4,374,289, Cl. 570-168.000.

Van Dewoestine, Robert V., to Corning Glass Works. Wood burning stove. 4,373,452, Cl. 110-203.000.

van Dyke, Martin J.; Colby, Dwight D.; and Dougherty, William R., to Honeywell Inc. Liquid gaging system compatible with multiple characterization of each sensor. 4,373,390, Cl. 73-304.00C.

van Es, Machiel A. H.: *See—*
Olivierse, Jan; and van Es, Machiel A. H., 4,373,320, Cl. 53-589.000.

van Halderen, Gerardus. Modified chain saw. 4,373,265, Cl. 30-383.000.

VanHoutte, Arthur C.; and Caber, Earl L. Method of opening a can with fulcrum-type opener tabs. 4,373,246, Cl. 29-426.400.

Van Raamsdonk, Cornelis; and Wartusch, Johann, to Olympia Werke AG; and Licentia Patent-Verwaltungs-GmbH. Elastic cover of an elastomeric material. 4,374,223, Cl. 524-245.000.

Van Rosmalen, Gerard E.; and Opheij, Willem G., to U.S. Philips Corporation. Optical focussing device with inclination detection. 4,374,324, Cl. 250-201.000.

Van Uitert, LeGrand G.: *See—*
Camlibel, Irfan; Singh, Shobha; and Van Uitert, LeGrand G., 4,374,391, Cl. 357-17.000.

VanZandt, John M. Nail polish hanger. 4,373,632, Cl. 206-457.000.

Varian Associates, Inc.: *See—*
Iwao, Kumiy R.; and Lovie, James V., 4,374,089, Cl. 422-70.000.
Landfors, Arthur A., 4,373,868, Cl. 417-154.000.

Varitran, Inc.: *See—*
Mills, Ned D., 4,373,408, Cl. 74-687.000.

Vear, John P.: *See—*
Cornell, William F.; Vear, John P.; and Pascuzzi, E. Anthony, 4,373,659, Cl. 229-32.000.

Veda, Inc.: *See—*
Buschbom, Floyd E.; and Hansen, Glen D., 4,373,600, Cl. 180-212.000.
Henke, Donald L., 4,373,845, Cl. 414-326.000.

Veeco/Macronetics Inc.: *See—*
Webster, Douglas G., 4,374,352, Cl. 318-762.000.

Vepa AG: *See—*
Fleissner, Hans, 4,373,362, Cl. 68-9.000.

Verdier, Henri: *See—*
Bienvenu, Jacques; Carre, Claude; Tuong, Duc L.; and Verdier, Henri, 4,374,409, Cl. 364-200.000.

Verkevich, Vsevolod I.: *See—*
Anisimov, Veniamin M.; Belov, Valentin V.; Verkevich, Vsevolod I.; and Orionov, Jury E., 4,373,698, Cl. 251-26.000.

Vermohlen, Werner: *See—*
Renzel, Peter; and Vermohlen, Werner, 4,373,394, Cl. 73-606.000.

Vernon, Joseph O. Spline joints and method and apparatus for making same. 4,373,562, Cl. 144-144.50R.

Vervoordt, Joseph P.; and Gorzynski, Joseph J. Rotary valve system. 4,373,476, Cl. 123-80.00D.

Vickers, Stanley: *See—*
Baldwin, John J.; Ponticello, Gerald S.; Vickers, Stanley; and Steuerwald, Alfred, 4,374,140, Cl. 424-263.000.

Victor Company of Japan, Ltd.: *See—*
Ogawa, Hiroshi; Sato, Kazuhiro; Shibata, Norio; Oguri, Katsuhiko; Utida, Masayoshi; and Ono, Tsuyoshi, 4,374,433, Cl. 369-136.000.

Vigar, James M. L.: *See—*
Barclay, Donald J.; and Vigar, James M. L., 4,374,007, Cl. 204-51.000.

Vikis, Andreas C., to Canadian Patents & Development Limited. Photochemical separation of isotopes. 4,374,010, Cl. 204-157.10R.

Vinals, Joaquin F.: *See—*
Klemarczyk, Philip T.; Sanders, James M.; Vock, Manfred H.; Vinals, Joaquin F.; Schmitt, Frederick L.; and Granda, Edward J., 4,374,054, Cl. 252-522.00R.
Schreck, Ronald P.; Light, Kenneth K.; Hall, John B.; Schmitt, Frederick L.; Vock, Manfred H.; Schreiber, William L.; Vinals, Joaquin F.; and Kiwala, Jacob, 4,374,055, Cl. 252-522.00R.

Viola, Raymond D.; and Hanley, Gerard L., to Sperry Corporation. Multilevel stripline transition. 4,374,368, Cl. 333-128.000.

Vitafin N.V.: *See—*
Wittkampf, Frederik H. M.; Mensink, Kornelis A.; and Brouwer, Hendrik L., 4,373,531, Cl. 128-419.0PG.

Vizmuller, Peter: *See—*
Popovski, George N.; and Vizmuller, Peter, 4,374,370, Cl. 333-202.000.

Vock, Manfred H.: *See—*
Klemarczyk, Philip T.; Sanders, James M.; Vock, Manfred H.; Vinals, Joaquin F.; Schmitt, Frederick L.; and Granda, Edward J., 4,374,054, Cl. 252-522.00R.
Schreck, Ronald P.; Light, Kenneth K.; Hall, John B.; Schmitt, Frederick L.; Vock, Manfred H.; Schreiber, William L.; Vinals, Joaquin F.; and Kiwala, Jacob, 4,374,055, Cl. 252-522.00R.

Vogt, Hermann: *See—*
Schindler, Manfred; Ficht, Reinhold; and Vogt, Hermann, 4,373,474, Cl. 123-56.00B.

Vogt, Martin C.: *See—*
Kim, Tai K.; MacInnis, Martin B.; McClintic, Robert P.; and Vogt, Martin C., 4,374,099, Cl. 423-54.000.

Vogten, Leonardus L. M.; and Willems, Leonardus F., to N.V. Philips' Gloeilampenfabrieken; and Technische Hogeschool Eindhoven. Arrangement and method for generating a speech signal. 4,374,302, Cl. 179-1.0SM.

Volf, Leonard A.: *See—*
Alexandrov, Sasho P.; Mubarakshin, Gadylsha M.; Volf, Leonard A.; and Burinsky, Stanislav V., 4,374,204, Cl. 521-28.000.

Volker, Herbert: *See—*
Bozon, Alfred; Lakatos, Eduard; Koberstein, Edgar; Pletka, Hans-Dieter; and Volker, Herbert, 4,374,047, Cl. 252-472.000.

Volkswagenwerk Aktiengesellschaft: *See—*
Kruger, Hermann; and Willmann, Michael, 4,373,481, Cl. 123-198.00F.

Volpe, Filippo. Process for manufacturing a metal seat back structure. 4,373,245, Cl. 29-416.000.

Vong, Sandy T. S., to Ford Motor Company. Method for obtaining a coating of a preferred composition on a surface of a glass substrate. 4,374,156, Cl. 427-8.000.

Voorwood Company: *See—*
Hawkins, James H., 4,373,984, Cl. 156-477.100.

Vora, Madhukar B.; and Rust, Werner F., to Fairchild Camera & Instrument Corp. Process for fabricating non-encroaching planar insulating regions in integrated circuit structures. 4,374,011, Cl. 204-192.0EC.

W. C. Heraeus GmbH: *See—*
Hoffmann, Erich; and Ptaschek, Werner, 4,374,322, Cl. 250-226.000.

Wada, Ryoichi: *See—*
Oshima, Mitsuaki; Neichi, Yutaka; Iga, Atsushi; and Wada, Ryoichi, 4,374,403, Cl. 360-113.000.

Wada, Tomio: *See—*
Nonomura, Keisaku; Takamatsu, Toshiaki; Uede, Hisashi; and Wada, Tomio, 4,373,784, Cl. 350-336.000.

Wagner, Harry H., to Carlisle Corporation. Process for making friction products. 4,374,059, Cl. 523-153.000.

Walk, Wolf-Rudiger: *See—*
Greiner, Max; Krieger, Klaus; Schiller, Gottfried; Walk, Wolf-Rudiger; and Walz, Ludwig, 4,373,496, Cl. 123-569.000.

Walker, Robert A. Two-axis rudder trim for aircraft. 4,373,689, Cl. 244-87.000.

Walker, Robert B., deceased: *See—*
Hill, Jack; Sharp, Brian W.; Warburton, Dennis; Walker, Robert B., deceased; and Walker, Thomas, administrator, 4,374,136, Cl. 424-251.000.

Walker, Thomas, administrator: *See—*
Hill, Jack; Sharp, Brian W.; Warburton, Dennis; Walker, Robert B., deceased; and Walker, Thomas, administrator, 4,374,136, Cl. 424-251.000.

Wallac Oy: *See—*
Soini, Erkki; and Hemmila, Ilkka, 4,374,120, Cl. 436-546.000.

Wallick, William P.; and Gauthier, George A., to Wallick, William P. Apparatus for applying a grill stripe to a meat product. 4,373,431, Cl. 99-483.000.

Walter, John, to Continental Group, Inc. Means for assembling container halves. 4,373,983, Cl. 156-423.000.

Walter, Wolfgang; and Breitweg, Werner, to Zahnradfabrik Friedrichshafen, AG. Hydraulic rack steering system. 4,373,599, Cl. 180-148.000.

Walton, Russell C. Machine control device. 4,374,309, Cl. 200-61.420.

Walz, Ludwig: *See—*
Greiner, Max; Krieger, Klaus; Schiller, Gottfried; Walk, Wolf-Rudiger; and Walz, Ludwig, 4,373,496, Cl. 123-569.000.

Wang, Jia-Tarng: *See—*
Khadder, Wadie N.; Wang, Jia-Tarng; and Solomon, James E., 4,373,253, Cl. 29-576.00B.

Wansor, David H.: *See—*
Cormier, Roger L.; Dugan, Robert J.; Guyette, Richard R.; and Wansor, David H., 4,374,415, Cl. 364-200.000.

Warburton, Dennis: *See—*
Hill, Jack; Sharp, Brian W.; Warburton, Dennis; Walker, Robert B., deceased; and Walker, Thomas, administrator, 4,374,136, Cl. 424-251.000.

Ward, Arthur T., Jr. Asphalt compositions and method for paving. 4,373,960, Cl. 106-281.00R.

Ward, Robert J.: *See—*
Berger, Mitchell H.; Mayer, Walter P.; and Ward, Robert J., 4,374,237, Cl. 528-28.000.

Warner-Lambert Company: *See—*
Cardarelli, Nathan F.; and Evans, William H., 4,374,126, Cl. 424-81.000.
Haskell, Theodore H.; and Hutt, Marland P., 4,374,138, Cl. 424-258.000.

Warner Lambert Technologies, Inc.: *See—*
Shoemaker, Arthur H., 4,373,785, Cl. 350-414.000.

Wartusch, Johann: *See—*
Van Raamsdonk, Cornelis; and Wartusch, Johann, 4,374,223, Cl. 524-245.000.

Washburn, William J.; Thompson, Hugh B.; and La Fever, Clifford E., to Ford Motor Company. Reciprocating feed system. 4,373,422, Cl. 89-33.0CA.

Watanabe, Hiroshi; and Hirota, Hajime, to Kao Soap Co., Ltd. Lowly irritating detergent. 4,374,056, Cl. 252-546.000.

Watanabe, Hisashi: *See—*
Date, Takasaburo; Maki, Toshimichi; Iguchi, Mitsuya; Iwamaru, Sumifusa; and Watanabe, Hisashi, 4,373,911, Cl. 432-152.000.

Watanabe, Kazuki. Machine for use in implanting plant supporting stakes. 4,373,833, Cl. 405-36.000.

Watanabe, Tsuyoshi: *See—*
Kuge, Tsukasa; Matsumoto, Toru; Watanabe, Tsuyoshi; and Tamura, Yasuyuki, 4,373,469, Cl. 118-652.000.

Watanuki, Masakazu: *See—*
Kawano, Yoshihiko; Adachi, Hirosi; Watanuki, Masakazu; and Ueno, Takashi, 4,373,679, Cl. 241-275.000.

Waters, Fleming A., to Otis Engineering Corporation. Test-system. 4,373,583, Cl. 166-113.000.

Watson, Herman, to Respitrace Corporation. Method and apparatus for calibrating respiration monitoring system. 4,373,534, Cl. 128-725.000.

Wattenbarger, J. Frank, to United States of America, Navy. Heated breathing bag sheath. 4,373,521, Cl. 128-202.130.

Web Graphics, Inc.: *See—*
Cone, Clendon W., 4,373,986, Cl. 156-552.000.

Webster, Douglas G., to Veeco/Macronetics Inc. AC Induction motor braking system. 4,374,352, Cl. 318-762.000.

Weed, Lyle E., to Brunswick Corporation. Outboard propulsion gearcase. 4,373,922, Cl. 440-89.000.

Weeks, Thomas J., Jr.: *See—*
Ruszala, Ferdinand A.; and Weeks, Thomas J., Jr., 4,374,270, Cl. 562-599.000.

Wegemund, Bernd: *See—*
Linden, Heinrich; Bornmann, Hans; Gress, Wolfgang; and Wegemund, Bernd, 4,373,964, Cl. 106-308.00Q.

Wehner, Wolfgang; Farooq, Saleem; and Kostler, Hans-Gunter, to Ciba-Geigy Corporation. Tin compounds. 4,374,145, Cl. 424-278.000.

Weinman, Leslie S.: *See—*
Lin, Jacob W.; and Weinman, Leslie S., 4,374,179, Cl. 428-411.000.

Weissler, Harold E., II: *See—*
O'Keefe, Patrick J., Jr.; and Weissler, Harold E., II, 4,374,422, Cl. 364-426.000.

Wellman, James E.: *See—*
Kaplan, Robert A.; Reicke, Mark A.; and Wellman, James E., 4,373,901, Cl. 431-186.000.

Welsh, James W. Method and apparatus for utilizing gaseous and liquid fuels in an internal combustion engine. 4,373,493, Cl. 123-525.000.

Werts, Jean-Pierre: *See—*
Bodart, Robert; and Werts, Jean-Pierre, 4,374,305, Cl. 179-16.0EA.

West, Cecil W., to Coal Industry (Patents) Limited. Vehicle brake equipment. 4,373,613, Cl. 188-43.000.

West, John C., to Century Mfg. Co. Light blocking lens for welder helmet. 4,373,212, Cl. 2-8.000.

Westerfield, Lawerence D., to International Harvester Co. Agricultural furrow forming apparatus depth control. 4,373,456, Cl. 111-88.000.

Western Electric Company, Inc.: *See—*
Banks, Edward L., 4,373,991, Cl. 156-645.000.
Crews, Edgar W.; and Sprain, Charles E., 4,373,681, Cl. 242-25.00A.
Hutchins, Erle M., 4,373,258, Cl. 29-764.000.
March, Edward J.; and Newman, Raymond J., 4,373,658, Cl. 228-242.000.
Parker, John L., Jr.; and Ranes, Robert B., 4,373,656, Cl. 228-203.000.

Westernacher, Helmut; and Aertken, Karl, to GAF-Huls Chemie GmbH. Distillation of butinediol-1,4. 4,373,999, Cl. 203-6.000.

Westinghouse Electric Corp.: *See—*
Caputo, William R.; and Husson, Alan L., 4,373,612, Cl. 187-29.00R.
Isenberg, Arnold O., 4,374,163, Cl. 427-253.000.
Kommineni, Prasad R., 4,374,298, Cl. 174-21.00C.
Moates, Roger D., 4,374,384, Cl. 340-870.380.
Somers, Edward V.; and Isenberg, Arnold O., 4,374,184, Cl. 429-17.000.
Wolters, Richard H.; Anderson, William C.; Tyke, Charles R.; and Schreiner, Charles P., 4,373,642, Cl. 220-72.000.

Weyenberg, Donald R.: *See—*
Gaul, John H.; and Weyenberg, Donald R., 4,374,182, Cl. 428-446.000.

Weyer, Paul P. Rotary actuator. 4,373,426, Cl. 91-396.000.

Weyerhaeuser Company: *See—*
Wytko, Richard, 4,373,660, Cl. 279-39.00R.

Whirlpool Corporation: *See—*
Connor, Ralph F., 4,373,356, Cl. 62-468.000.

White Consolidated Industries, Inc.: *See—*
Barnett, Eugene J., 4,374,320, Cl. 219-413.000.

White, Kenneth T.; and Roberts, Harold F., to Chemetron Corporation. Fire extinguishing apparatus. 4,373,588, Cl. 169-19.000.

White, Ronald E.: *See—*
Wright, George C.; and White, Ronald E., 4,374,246, Cl. 546-156.000.

Whiteman, Dennis J. C.; and Whiteman, Gary R. C. Board game. 4,373,731, Cl. 273-262.000.

Whiteman, Gary R. C.: *See—*
Whiteman, Dennis J. C.; and Whiteman, Gary R. C., 4,373,731, Cl. 273-262.000.

Whitt, Everett D. Surgical limb holder. 4,373,709, Cl. 269-328.000.

Whittaker, Ralph E., to Atlantic Richfield Company. Housing structure utilizing solar energy. 4,373,308, Cl. 52-173.00R.

Wichkoski, Dennis A.: *See—*
Silberman, Raphael J.; Tilton, Frederick T.; Smith, Everett H.; and Wichkoski, Dennis A., 4,373,584, Cl. 166-117.700.

Wichman, Cynthia A., to Kendall Company, The. Disposable garment with card pocket. 4,373,214, Cl. 2-51.000.

Wick, Alexander E., to Hoffmann-La Roche Inc. 1-Ethyl-1,4-dihydro-6-(2-naphthyl)-4-oxo-nicotinic acid and esters thereof. 4,374,261, Cl. 560-51.000.

Wicki, Heinz, to Sandoz Ltd. Metal complexes of disazo compounds having a 5-amino or hydroxy-3-carboxy or methyl-1- substituted phenylpyrazole coupling component radical. 4,374,064, Cl. 260-147.000.

Widmann, Wolfgang, to Daimler-Benz A.G. Turbocharged internal combustion engine with spark ignition. 4,373,337, Cl. 60-611.000.

Wiegand, Karl E.: *See—*
Kao, James T. F.; and Wiegand, Karl E., 4,374,256, Cl. 548-561.000.

Wieringa, Johannes H., to Akzo n.v. Tricyclic compounds. 4,374,133, Cl. 424-244.000.

Wilger, John A.: *See—*
Allori, Aldo; Koutsky, Ronald A.; and Wilger, John A., 4,374,375, Cl. 340-52.00A.

Willems, Leonardus F.: *See—*
Vogten, Leonardus L. M.; and Willems, Leonardus F., 4,374,302, Cl. 179-1.0SM.

Wm. G. Leininger Knitting Company: *See—*
Guigley, Paul A., 4,373,215, Cl. 2-239.000.

Williams, Donald L., to General Motors Corporation. Engine cooling-passenger heating system. 4,373,666, Cl. 237-12.30B.

Williams Electronics, Inc.: *See—*
Ritchie, Steven S., 4,373,725, Cl. 273-121.00A.

Williams, Errol R., Jr.: *See—*
Polk, Darryl R.; and Williams, Errol R., Jr., 4,374,383, Cl. 340-870.370.

Williams, Thomas E.: *See—*
Klaus, Gerald R.; and Williams, Thomas E., 4,373,449, Cl. 108-60.000.

Willis, Jeffrey D.; and Gibney, Nigel P., to Rolls-Royce Limited. Combustion equipment. 4,373,342, Cl. 60-748.000.

Willmann, Michael: *See—*
Kruger, Hermann; and Willmann, Michael, 4,373,481, Cl. 123-198.00F.

Wilson, Gregg; and Page, John F., to CBS Inc. Electric guitar. 4,373,417, Cl. 84-1.160.

Wilson, Ruth I. Bathtub safety support. 4,373,221, Cl. 4-559.000.

Wilson, William W.: *See—*
Christe, Karl O.; and Wilson, William W., 4,374,112, Cl. 423-351.000.

Wilting, Hermanus J. H., to U.S. Philips Corporation. Method of manufacturing a semiconductor device. 4,373,251, Cl. 29-571.000.

Winkler, John M.: *See—*
Lunn, Royston C.; MacAfee, J. Edwin; Grabowski, Robert C.; Renneker, Dennis N.; and Winkler, John M., 4,373,604, Cl. 180-247.000.

Winslow, John S.; and Dakin, Wayne R., to Discovision Associates. Focusing apparatus for use in a system for recovering information from an optically-readable storage medium. 4,374,323, Cl. 250-201.000.

Winter, Donald T.: *See—*
Hetrick, Earl C.; and Winter, Donald T., 4,373,998, Cl. 202-258.000.

Winter, George D., deceased: *See—*
Errede, Louis A.; Stoesz, James D.; and Winter, George D., deceased, 4,373,519, Cl. 128-156.000.

Witter, Donald R.: *See—*
Nathan, Bernard D.; and Witter, Donald R., 4,374,005, Cl. 204-15.000.

Wittkampf, Frederik H. M.; Mensink, Kornelis A.; and Brouwer, Hendrik L., to Vitafin N.V. Apparatus for physiological stimulation and detection of evoked response. 4,373,531, Cl. 128-419.0PG.

Wittrock, Michael C., to Eversman Mfg. Company, The. Tilling apparatus. 4,373,590, Cl. 172-78.000.

Wojtowicz, Wesley J., to H. A. Montgomery Co., Inc., The. Metalworking lubrication. 4,374,168, Cl. 428-212.000.

Wolfe, Richard M.; and Dixon, Katharine N., to Enhancement Systems, Inc. Prosthetic bench. 4,373,222, Cl. 5-431.000.

Wolters, Richard H.; Anderson, William C.; Tyke, Charles R.; and Schreiner, Charles P., to Westinghouse Electric Corp. Material handling tote. 4,373,642, Cl. 220-72.000.

Wolters, Tjako A., to Ballast-Nedam Groep N.V. Method of accurately dredging a desired profile contour. 4,374,420, Cl. 364-424.000.

Wood, Prentice J., to Mead Corporation, The. Article carrier. 4,373,627, Cl. 206-201.000.

Woods, William B.: *See—*
Deinet, Adolph J.; and Woods, William B., 4,373,953, Cl. 106-16.000.

Woods, William G.: *See—*
Hunter, Don L.; Woods, William G.; Stone, James D.; and LeFevre, Cecil W., 4,374,271, Cl. 564-310.000.

Woodyard, Steven J.: *See—*
Rhodes, Harold B.; and Woodyard, Steven J., 4,373,418, Cl. 84-404.000.
Woolley, Ian J.: *See—*
Alexander, David G.; and Woolley, Ian J., 4,373,434, Cl. 100-43.000.
Workman Bag Company Ltd.: *See—*
Planeta, Mirek, 4,373,979, Cl. 156-73.100.
Wragg, Robert, to Hughes Aircraft Company. Thin-panel illuminator for front-lit displays. 4,373,282, Cl. 40-546.000.
Wright, Danny W., to Pennwalt Corporation. Chlorocarbon and halogen recovery from vent gas stream. 4,373,942, Cl. 62-12.000.
Wright, George C.; and White, Ronald E., to Norwich Eaton Pharmaceuticals, Inc. 1-N-[(1-Carboxy-3-phenylpropyl)glycyl]-1,2,3,4-tetrahydroquinoline-2-carboxylic acid compounds. 4,374,246, Cl. 546-156.000.
Wright, Norbert L.; and Selusnik, Jerome A., to Teepak, Inc. Controlled rate linear motion drive. 4,373,648, Cl. 223-28.000.
Wright, Ralph R.: *See—*
Arnold, Jones B.; Steger, Philip J.; and Wright, Ralph R., 4,374,002, Cl. 204-7.000.
Wrobel, Gunter: *See—*
Papst, Georg F.; Harmsen, Siegfried; and Wrobel, Gunter, 4,373,861, Cl. 415-213.00C.
Wu, Margaret M.: *See—*
Klosek, John M.; and Wu, Margaret M., 4,374,297, Cl. 585-868.000.
Wuerzer, Bruno: *See—*
Eicken, Karl; and Wuerzer, Bruno, 4,373,945, Cl. 71-92.000.
Wunning, Joachim, to Aichelin GmbH. Burner system. 4,373,903, Cl. 431-215.000.
Wurst, John W.: *See—*
Dunn, William H.; Garron, Stephen A.; Horey, Leonard I.; and Wurst, John W., 4,373,459, Cl. 112-158.00E.
Wurttembergishche Metallwarenfabrik: *See—*
Motsch, Hans, 4,373,259, Cl. 29-840.000.
Wykes, John S.; and Adsley, Ian, to Coal Industry (Patents) Limited. Method for determining the proportion of at least one material in a moving mixture of materials. 4,374,326, Cl. 250-255.000.
Wytko, Richard, to Weyerhaeuser Company. Container. 4,373,660, Cl. 279-39.00R.
Xerox Corporation: *See—*
Chen, Tu; and Cavallotti, Pietro L., 4,374,009, Cl. 204-129.100.
Henry, Arnold W.; Azar, Jack C.; and Sagal, John, Jr., 4,373,239, Cl. 29-132.000.
Lama, William L., 4,373,780, Cl. 350-96.250.
Martellock, Arthur C.; Carlston, Richard L.; and Liang, Shwu-Jian. 4,374,212, Cl. 523-212.000.
Olsen, Alf J., 4,373,824, Cl. 400-234.000.
Shogren, David K., 4,373,803, Cl. 355-49.000.
Snelling, Christopher; and Lenhard, Myron J., 4,373,799, Cl. 355-3.00R.
Yagi, Akira: *See—*
Bandai, Shinji; Kajimaki, Masao; Nakajima, Yoshihiro; Yagi, Akira; and Nishimura, Haruo, 4,373,224, Cl. 15-1.50A.
Yamada, Hirosuke, to Kawasaki Steel Corporation. Method and apparatus for separating slag and pouring molten steel out of a container such as a converter or the like. 4,373,705, Cl. 266-227.000.
Yamada, Tateo: *See—*
Kimura, Hiroyuki; and Yamada, Tateo, 4,373,795, Cl. 354-173.000.
Yamada, Tokuyoshi: *See—*
Ueda, Setsuo; Yasuda, Takashi; Yamada, Tokuyoshi; and Kobayashi, Shigeki, 4,374,074, Cl. 264-8.000.
Yamada, Yasuyuki, to Canon Kabushiki Kaisha. Photographic objective of reduced size. 4,373,786, Cl. 350-432.000.
Yamagata, Toshio: *See—*
Moriya, Takeo; and Yamagata, Toshio, 4,374,193, Cl. 430-149.000.
Yamaguchi, Hiroshi, to Nissan Motor Company, Limited. Spark timing control system. 4,373,489, Cl. 123-422.000.
Yamaguchi, Kazuyuki: *See—*
Masuda, Teruo; Morita, Masayasu; Yamaguchi, Kazuyuki; and Harada, Yoshikazu, 4,373,516, Cl. 128-57.000.
Yamaki, Kiyoshi: *See—*
Kato, Shinichi; Tsuda, Hiroshi; Yamaki, Kiyoshi; Suzuki, Tadashi; and Kuwano, Fumiyoshi, 4,374,310, Cl. 200-61.540.
Yamamoto, Hiroshi; and Furutani, Yoshikazu, to Kabushiki Kaisha Kyotô Daiichi Kagaku. Method and device for analysis with color identification test paper. 4,373,818, Cl. 356-408.000.
Yamamoto, Hitoshi: *See—*
Tomita, Takao; Yamamoto, Hitoshi; Enoki, Shigenaga; Goto, Isamu; and Hashimoto, Takeshi, 4,373,602, Cl. 180-227.000.
Yamamoto, Masaki, to Takeda Chemical Industries, Ltd. Apparatus for mass-producing medical tablets. 4,373,888, Cl. 425-149.000.
Yamamoto, Shigeo: *See—*
Kudo, Kazushige; Yamamoto, Shigeo; and Murase, Shigemitsu, 4,374,031, Cl. 252-8.800.
Yamamoto, Shinichi; and Ito, Toshihiko, to Nippon Soken, Inc. Extrusion die and method for producing extrusion die for forming a honeycomb structure. 4,373,895, Cl. 425-461.000.
Yamamoto, Toshio: *See—*
Yuge, Shizuo; Kitou, Nobuo; Yamamoto, Toshio; and Kanesaka, Michiru, 4,373,802, Cl. 355-14.0FU.
Yamamoto, Yuji; and Shiragaki, Sei, to Yamatake-Honeywell Co., Ltd. D-Type flip-flop circuit. 4,374,331, Cl. 307-291.000.
Yamane, Tsuneo: *See—*
Komurasaki, Satoshi; and Yamane, Tsuneo, 4,373,487, Cl. 123-418.000.
Yamasaki, Takanori: *See—*
Uenishi, Toshiaki; Harada, Hidefumi; Sasaki, Katumasa; Akagi, Akio; and Yamasaki, Takanori, 4,373,963, Cl. 106-304.000.
Yamashita, Akira; and Hiroyuki, Nagai, to Matsushita Electric Industrial Co., Ltd. Multiplexed television audio signal receiver. 4,374,398, Cl. 358-143.000.
Yamatake-Honeywell Co., Ltd.: *See—*
Yamamoto, Yuji; and Shiragaki, Sei, 4,374,331, Cl. 307-291.000.
Yamazaki, Noboru: *See—*
Yuasa, Teruo; Yamazaki, Noboru; and Morimoto, Yoshio, 4,374,272, Cl. 564-315.000.
Yanmar Diesel Engine Co., Ltd.: *See—*
Shikata, Mitsuo; and Usui, Kazuto, 4,373,480, Cl. 123-195.00A.
Yano, Singo: *See—*
Shibata, Shoji; Kumagai, Akira; Harada, Masatoshi; Yano, Singo; Saito, Hiroshi; and Takahashi, Kunio, 4,374,284, Cl. 568-817.000.
Yano, Yasuhiro: *See—*
Eida, Tsuyoshi; Yano, Yasuhiro; Matsufuji, Yohji; Haruta, Masahiro; and Ohta, Tokuya, 4,373,954, Cl. 106-20.000.
Yara Engineering Corporation: *See—*
Thompson, Thomas D.; Gergel, John F.; and Economou, Peter, 4,374,203, Cl. 501-148.000.
Yarwood, John C.; Gaule, Gerhart K.; and Ungarean, Gary L., to Olin Corporation. Apparatus and process for electromagnetically shaping a molten material within a narrow containment zone. 4,373,571, Cl. 164-467.000.
Yasuda, Takashi: *See—*
Ueda, Setsuo; Yasuda, Takashi; Yamada, Tokuyoshi; and Kobayashi, Shigeki, 4,374,074, Cl. 264-8.000.
Yates, Barrie J.; and Hurst, Ronald C., to Cabot Corporation. Production of high surface area carbon blacks. 4,374,113, Cl. 423-445.000.
Yelich, William, to Cla-Val Co. Valve having a bias-mounted elastomeric sealing element, and method of constructing the same. 4,373,550, Cl. 137-516.290.
Yolton, Charles F.; Cloran, Thomas S.; and Sloan, Thomas W., to Crucible Inc. Method for the plasma-arc production of metal powder. 4,374,075, Cl. 264-8.000.
Yoshida, Takao: *See—*
Luccarelli, Domenick, Jr.; and Yoshida, Takao, 4,374,123, Cl. 424-49.000.
Yoshimura, Hirofumi: *See—*
Sawatani, Tadashi; Ishii, Mitsuo; and Yoshimura, Hirofumi, 4,373,971, Cl. 148-12.0EA.
Yoshioka, Nobuyuki; Suzuki, Tsutai; Haba, Masanori; and Koyama, Hideo, to Kabushiki Kaisha Meidensha. Method of making a non-linear voltage-dependent resistor. 4,374,160, Cl. 427-101.000.
Yoshizaki, Osamu; and Inai, Masayuki, to Konishiroku Photo Industry Co., Ltd. Method of forming gradated images by thermal printer and thermal head for thermal printers. 4,374,385, Cl. 346-1.100.
Young, David A.: *See—*
Larkins, Thomas H.; Polichnowski, Stanley W.; Tustin, Gerald C.; and Young, David A., 4,374,070, Cl. 260-549.000.
Young, Robert F.: *See—*
Hall, Charles B.; McBride, Edward D.; and Young, Robert F., 4,373,920, Cl. 440-59.000.
Hall, Charles B.; McBride, Edward D.; and Young, Robert F., 4,373,921, Cl. 440-61.000.
Young, Stanley G.: *See—*
Deadmore, Daniel L.; and Young, Stanley G., 4,374,183, Cl. 428-641.000.
Yuasa, Hitoshi; and Imai, Hirosuke, to Nippon Oil Company, Ltd. Polyhexamethylenimine and process for its preparation. 4,374,243, Cl. 528-422.000.
Yuasa, Teruo; Yamazaki, Noboru; and Morimoto, Yoshio, to Mitsui Toatsu Chemicals, Inc. Process for preparing 2-(4'-hydroxyaryl)-2-(4'-aminoaryl)-propanes. 4,374,272, Cl. 564-315.000.
Yuasa, Yoshio: *See—*
Taniguchi, Nobuyuki; and Yuasa, Yoshio, 4,373,793, Cl. 354-31.000.
Yuge, Shizuo; Kitou, Nobuo; Yamamoto, Toshio; and Kanesaka, Michiru, to Minolta Camera Co., Ltd. Pre-operative time display system for copying machines. 4,373,802, Cl. 355-14.0FU.
Zabielski, Ray F. Looseleaf page lifter. 4,373,825, Cl. 402-80.00L.
Zahnradfabrik Friedrichshafen, AG: *See—*
Elser, Dieter, 4,373,598, Cl. 180-143.000.
Walter, Wolfgang; and Breitweg, Werner, 4,373,599, Cl. 180-148.000.
Zahnradfabrik Friedrichshafen A.G.: *See—*
Ehrlinger, Friedrich; and Meyerle, Michael, 4,373,359, Cl. 74-687.000.
Zenith Radio Corporation: *See—*
Citta, Richard W.; and Falater, Scott L., 4,374,437, Cl. 455-164.000.
Ensinger, James W., 4,374,399, Cl. 358-147.000.
Zeuna-Staerker GmbH & Co. KG: *See—*
Santiago, Andres; and Santiago, Enrique, 4,373,331, Cl. 60-323.000.
Zicko, James A., to Container Corporation of America. Dispensing container. 4,373,687, Cl. 242-163.000.
Zien, Allen S., to Zien Mechanical Contractors. Emergency fresh air supply device. 4,373,522, Cl. 128-206.120.
Zien Mechanical Contractors: *See—*
Zien, Allen S., 4,373,522, Cl. 128-206.120.
Zimmer, Inc.: *See—*
Kaiser, William L.; and Brown, Gale R., 4,373,518, Cl. 128-92.0EB.
Zimmern, Bernard, to Uniscrew Limited. Process to control the delivery of a single screw compressor. 4,373,866, Cl. 417-53.000.

Zipper, Donald H.: *See—*
Banich, John N., Sr.; and Zipper, Donald H., 4,373,641, Cl. 215-331.000.
Zlotek, T. F., to Dana Corporation. Elastomeric energizer for sprag clutch. 4,373,620, Cl. 192-41.00A.
Znaiden, Alexander P., to Avon Products, Inc. Elastomers and process for their preparation. 4,374,236, Cl. 528-26.500.
Zucker, Jerry; and Porlier, Beth W., to RM Industrial Products Company, Inc. Ceramic fiber foam and method for making same. 4,374,202, Cl. 501-82.000.
Zwick, Eugene B.; Nguyen, Dung D.; Brigham, William D.; and Hoffman, Kenneth. Burner construction. 4,373,896, Cl. 431-9.000.
Zwigert, John M.: *See—*
Rodenbaugh, Ralph L.; and Zwigert, John M., 4,373,437, Cl. 101-35.000.
110707 Canada Ltee: *See—*
Grandmont, Robert, 4,373,473, Cl. 122-20.00B.

LIST OF REISSUE PATENTEES

TO WHOM

PATENTS WERE ISSUED ON THE 15TH DAY OF FEBRUARY, 1983

NOTE.—Arranged in accordance with the first significant character or word of the name (in accordance with city and telephone directory practice).

Caddell, Richard W., to Kearney & Trecker Corporation. Mass memory access method and apparatus. Re. 31,153, Cl. 365-230.000.

Coulter Electronics, Inc.: *See*—
Ginsberg, Guenter; Horne, Thomas; and Kreiselman, Robert L., Re. 31,149, Cl. 422-64.000.
Ginsberg, Guenter; Horne, Thomas; and Kreiselman, Robert L., Re. 31,150, Cl. 422-64.000.

Ginsberg, Guenter; Horne, Thomas; and Kreiselman, Robert L., to Coulter Electronics, Inc. Apparatus for monitoring chemical reactions and employing moving photometer means. Re. 31,149, Cl. 422-64.000.

Ginsberg, Guenter; Horne, Thomas; and Kreiselman, Robert L., to Coulter Electronics, Inc. Apparatus for monitoring chemical reactions and employing moving photometer means. Re. 31,150, Cl. 422-64.000.

Horne, Thomas: *See*—
Ginsberg, Guenter; Horne, Thomas; and Kreiselman, Robert L., Re. 31,149, Cl. 422-64.000.
Ginsberg, Guenter; Horne, Thomas; and Kreiselman, Robert L., Re. 31,150, Cl. 422-64.000.

Iwasaki, Hikoji: *See*—
Sakaguchi, Mitsuo; Iwasaki, Hikoji; and Shimoya, Shigeo, Re. 31,152, Cl. 340-388.000.

Kearney & Trecker Corporation: *See*—
Caddell, Richard W., Re. 31,153, Cl. 365-230.000.

King, William J. Inexpensive solar cell and method therefor. Re. 31,151, Cl. 136-256.000.

Kobishi Electric Co., Ltd.: *See*—
Sakaguchi, Mitsuo; Iwasaki, Hikoji; and Shimoya, Shigeo, Re. 31,152, Cl. 340-388.000.

Kreiselman, Robert L.: *See*—
Ginsberg, Guenter; Horne, Thomas; and Kreiselman, Robert L., Re. 31,149, Cl. 422-64.000.
Ginsberg, Guenter; Horne, Thomas; and Kreiselman, Robert L., Re. 31,150, Cl. 422-64.000.

Mayo, John H. Sub-sea equipment test and isolation tool. Re. 31,148, Cl. 73-40.50R.

Sakaguchi, Mitsuo; Iwasaki, Hikoji; and Shimoya, Shigeo, to Kobishi Electric Co., Ltd. Alarm buzzer. Re. 31,152, Cl. 340-388.000.

Shimoya, Shigeo: *See*—
Sakaguchi, Mitsuo; Iwasaki, Hikoji; and Shimoya, Shigeo, Re. 31,152, Cl. 340-388.000.

LIST OF DESIGN PATENTEES

Aavid Engineering, Inc.: *See*—
McCarthy, Alfred F., 267,942, Cl. D13-23.000.

Alwell, Anne T.; Fogarty, A. Edward; Fogarty, Bonnie R.; Pagani, David A.; and Pook, Peter D., to Leisure Dynamics, Inc. Game device. 267,963, 2-15-83, Cl. D21-168.000.

Amerace Corporation: *See*—
Luckinbill, Harold R., 267,933, Cl. D10-113.000.

American Hospital Supply Corporation: *See*—
Nilles, John D.; Stankiewicz, Stanley L.; and Zubriski, David S., 267,974, Cl. D24-12.000.

Amerock Corporation: *See*—
Pittenger, Teresa R. B., 267,926, Cl. D8-318.000.

Associated Press, The: *See*—
Helling, Bernd; Zarro, Michael S.; and Rutherford, David G., 267,947, Cl. D14-94.000.

Ault, Charles M., to Termiflex Corporation. Front panel for a keyboard and display unit. 267,950, 2-15-83, Cl. D14-115.000.

Australasian Training Aids (Pty.) Ltd.: *See*—
Meredith, Brian H., 267,967, Cl. D22-99.000.

Ballereaud, Pierre. Stick for the application of cosmetics. 267,984, 2-15-83, Cl. D28-89.000.

Bannwart, Rene: *See*—
Schwab, Jean-Claude; and Bannwart, Rene, 267,931, Cl. D10-39.000.

Batts, John H.; and Duester, Everett L., to John Thomas Batts, Inc. Garment hanger body. 267,920, 2-15-83, Cl. D6-254.000.

Batts, John H., to John Thomas Batts, Inc. Garment hanger. 267,921, 2-15-83, Cl. D6-254.000.

Baxter Travenol Laboratories, Inc.: *See*—
van Amerongen, Edward; Cammarata, Frank, III; and Virag, Robert A., 267,975, Cl. D24-62.000.

Beach, Earl; and Matle, Calvin, to Ross Operating Valve Company. Muffler for a valve. 267,968, 2-15-83, Cl. D23-1.000.

Bendix Corporation, The: *See*—
Vintzel, Constantine; and McDaniel, George H., 267,944, Cl. D13-35.000.

Berner, John M. Powered snow thrower. 267,953, 2-15-83, Cl. D15-12.000.

Bianchi, William T. Packaging container. 267,928, 2-15-83, Cl. D9-329.000.

Bjon, Matts V. Random number die. 267,961, 2-15-83, Cl. D21-41.000.

Cammarata, Frank, III: *See*—
van Amerongen, Edward; Cammarata, Frank, III; and Virag, Robert A., 267,975, Cl. D24-62.000.

Cheung, Kwok K., to Cheung, Kwok Kee; Tong, King Sing; and Tong, Wing Kui. Vanity mirror incorporating illuminated surround. 267,983, 2-15-83, Cl. D28-67.000.

Cheung, Kwok Kee: *See*—
Cheung, Kwok K., 267,983, Cl. D28-67.000.

Cheung, Kwok T. Holder for letters, writing instruments, note pad and other stationery articles. 267,959, 2-15-83, Cl. D19-78.000.

Claman, Mike T., to Lewittes Furniture Enterprises, Inc. Chair. 267,913, 2-15-83, Cl. D6-78.000.

Clarion Co. Ltd.: *See*—
Hisatsune, Toshiyuki, 267,949, Cl. D14-96.000.

Clemente, Roger. Electric fan for engine cooling. 267,973, 2-15-83, Cl. D23-158.000.

Compagnie Generale des Etablissements Michelin: *See*—
Grenie, Philippe, 267,938, Cl. D12-147.000.

Conroy, John R.; and Mayne, Russell A. Motor vehicle trailer. 267,937, 2-15-83, Cl. D12-102.000.

Corba, Robert E., to S. C. Johnson & Son, Inc. Child-safe actuator for pressurized container. 267,930, 2-15-83, Cl. D9-448.000.

Corum, Ries, Bannwart & Co.: *See*—
Schwab, Jean-Claude; and Bannwart, Rene, 267,931, Cl. D10-39.000.

Drozd, Otto, to Wollard Aircraft Equipment, Inc. Passenger conveyance loader for airports. 267,977, 2-15-83, Cl. D25-1.000.

Ducellier & CIE: *See*—
Mauroy, Bernard, 267,979, Cl. D26-28.000.

Duester, Everett L.: *See*—
Batts, John H.; and Duester, Everett L., 267,920, Cl. D6-254.000.

Dushey, Phillip. Animal trap. 267,966, 2-15-83, Cl. D22-18.000.

Duvoux, Pierre G., to Equipements Automobiles Marchal. Windshield wiper. 267,939, 2-15-83, Cl. D12-155.000.

Duvoux, Pierre G., to Equipements Automobiles Marchal. Windshield wiper. 267,940, 2-15-83, Cl. D12-155.000.

Equipements Automobiles Marchal: *See*—
Duvoux, Pierre G., 267,939, Cl. D12-155.000.
Duvoux, Pierre G., 267,940, Cl. D12-155.000.

Erlewine, Mark; and Gibbons, William F. Guitar. 267,956, 2-15-83, Cl. D17-14.000.

Etudes Realisations de Chaines Automatiques: *See*—
Torterotot, Roland, 267,929, Cl. D9-370.000.

Faldmo, Adaire M.; and Faldmo, Robert. Pistol cabinet. 267,917, 2-15-83, Cl. D6-181.000.

Faldmo, Robert: *See*—
Faldmo, Adaire M.; and Faldmo, Robert, 267,917, Cl. D6-181.000.

Fildan, Gerhard. Link for brassieres. 267,909, 2-15-83, Cl. D2-409.000.

FMC Corporation: *See*—
Robinett, Frederick A.; and Shook, James M., 267,935, Cl. D12-13.000.

Fogarty, A. Edward: *See*—
Alwell, Anne T.; Fogarty, A. Edward; Fogarty, Bonnie R.; Pagani, David A.; and Pook, Peter D., 267,963, Cl. D21-168.000.

Fogarty, Bonnie R.: *See*—
Alwell, Anne T.; Fogarty, A. Edward; Fogarty, Bonnie R.; Pagani, David A.; and Pook, Peter D., 267,963, Cl. D21-168.000.

Fuji Koeki Corporation: *See*—
Sawara, Kenji, 267,954, Cl. D16-6.000.

Gibbons, Margaret K. Rabbit figure. 267,964, 2-15-83, Cl. D21-187.000.

Gibbons, William F.: *See*—
Erlewine, Mark; and Gibbons, William F., 267,956, Cl. D17-14.000.

Gibstein, Edward; and Nortman, Jeffrey, to Jedco Products Ltd. Combination utility and pocketbook light. 267,980, 2-15-83, Cl. D26-37.000.

Gordon Ellis and Company: *See*—
Rodger, Michael, 267,969, Cl. D23-71.000.

Grenie, Philippe, to Compagnie Generale des Etablissements Michelin. Tire. 267,938, 2-15-83, Cl. D12-147.000.

Gronwick, Jerry P., to Sunbeam Corporation. Radiant heater. 267,970, 2-15-83, Cl. D23-120.000.

Hammer, Claire W.; and Wernig, Clara Z. Arm-sling. 267,976, 2-15-83, Cl. D24-64.000.

Harrison, Marc, to Quartzpower, Inc. Heater. 267,971, 2-15-83, Cl. D23-123.000.

Haruguchi, Kenichi; Miyake, Takao; Numano, Masafumi; and Tsujimoto, Kazuo, to Sharp Corporation. Microwave oven. 267,923, 2-15-83, Cl. D7-351.000.

Heap, Jean W., to Pendelfin Studios Limited. Dragon sculpture. 267,934, 2-15-83, Cl. D11-162.000.

Helling, Bernd; Zarro, Michael S.; and Rutherford, David G., to Associated Press, The. Portable facsimile transmitter. 267,947, 2-15-83, Cl. D14-94.000.

Hisatsune, Toshiyuki, to Clarion Co. Ltd. Amplifier for automobile. 267,949, 2-15-83, Cl. D14-96.000.

Houts, Ronald C.: *See*—
Seim, William J.; and Houts, Ronald C., 267,943, Cl. D13-24.000.

Huber, Otto L., to Moldex/Metric Products, Inc. Disposable face mask. 267,985, 2-15-83, Cl. D29-08.000.

Innovative Concepts, Inc.: *See*—
Long, Jerry M.; and Womack, James A., 267,911, Cl. D3-35.000.

Ishida, Katsuhiro: *See*—
Kosako, Mikio; and Ishida, Katsuhiro, 267,946, Cl. D14-94.000.

Jackson, Frank W. Electrocardiogram analyzer. 267,957, 2-15-83, Cl. D18-9.000.

Jannell & Son Body Company: *See*—
Jannell, Walter D.; McIntosh, Howard N.; and O'Bar, Edward J., 267,936, Cl. D12-96.000.

Jannell, Walter D.; McIntosh, Howard N.; and O'Bar, Edward J., to Jannell & Son Body Company. Vehicular van body. 267,936, 2-15-83, Cl. D12-96.000.

Jedco Products Ltd.: *See*—
Gibstein, Edward; and Nortman, Jeffrey, 267,980, Cl. D26-37.000.

John Thomas Batts, Inc.: *See*—
Batts, John H.; and Duester, Everett L., 267,920, Cl. D6-254.000.
Batts, John H., 267,921, Cl. D6-254.000.

Kato, Takaharu, to Ricoh Company, Ltd. Single lens reflex camera. 267,955, 2-15-83, Cl. D16-8.000.

Kennedy, Donald J. Pocket dispenser for perfume and the like. 267,982, 2-15-83, Cl. D28-5.000.

Kobayashi, Masashi, to Maruman Golf Kabushiki Kaisha. Iron club head. 267,965, 2-15-83, Cl. D21-220.000.

Kojima, Fumiyo; and Yoshihama, Manzo, to Ricoh Company, Ltd. Facsimile transmitter and receiver. 267,948, 2-15-83, Cl. D14-94.000.

Kosako, Mikio; and Ishida, Katsuhiro, to Sharp Corporation. Facsimile transceiver. 267,946, 2-15-83, Cl. D14-94.000.

La Mancusa, Martin R. Combined bottle opener and can opener. 267,925, 2-15-83, Cl. D8-18.000.

Lasher, George D. Paper baling rack. 267,918, 2-15-83, Cl. D6-184.000.

Leisure Dynamics, Inc.: *See*—
Alwell, Anne T.; Fogarty, A. Edward; Fogarty, Bonnie R.; Pagani, David A.; and Pook, Peter D., 267,963, Cl. D21-168.000.

Lenger, Sidney A., Jr., to Singer Company, The. Mirrored hutch or similar article. 267,915, 2-15-83, Cl. D6-153.000.

Lenger, Sidney A., Jr., to Singer Company, The. Chest of drawers or similar article. 267,916, 2-15-83, Cl. D6-154.000.

Lewittes Furniture Enterprises, Inc.: *See*—
Claman, Mike T., 267,913, Cl. D6-78.000.

Lin, Richard A. Rack for holding stemware glasses. 267,914, 2-15-83, Cl. D6-113.000.

Lingwall, David K.: *See*—
Schockemoehl, Robert J.; and Lingwall, David K., 267,972, Cl. D23-128.000.

Lomauro, Carl. Stuffed food product. 267,908, 2-15-83, Cl. D1-2.000.

Lombard, Charles W. Automotive wheel. 267,941, 2-15-83, Cl. D12-209.000.

Long, Jerry M.; and Womack, James A., to Innovative Concepts, Inc. Diskette storage container. 267,911, 2-15-83, Cl. D3-35.000.

Luckinbill, Harold R., to Amerace Corporation. Roadway marker. 267,933, 2-15-83, Cl. D10-113.000.

Martin, James W. Low-profile intake manifold. 267,952, 2-15-83, Cl. D15-5.000.

Maruman Golf Kabushiki Kaisha: *See*—
Kobayashi, Masashi, 267,965, Cl. D21-220.000.

Matle, Calvin: *See*—
Beach, Earl; and Matle, Calvin, 267,968, Cl. D23-1.000.

Mauroy, Bernard, to Ducellier & CIE. Lamp for a vehicle. 267,979, 2-15-83, Cl. D26-28.000.

Mayne, Russell A.: *See*—
Conroy, John R.; and Mayne, Russell A., 267,937, Cl. D12-102.000.

McCarthy, Alfred F., to Aavid Engineering, Inc. Heat-sink for electronic semiconductor devices. 267,942, 2-15-83, Cl. D13-23.000.

McDaniel, George H.: *See*—
Vintzel, Constantine; and McDaniel, George H., 267,944, Cl. D13-35.000.

McIntosh, Howard N.: *See*—
Jannell, Walter D.; McIntosh, Howard N.; and O'Bar, Edward J., 267,936, Cl. D12-96.000.

Meredith, Brian H., to Australasian Training Aids (Pty.) Ltd. Light duty target mechanism. 267,967, 2-15-83, Cl. D22-99.000.

Miller, Jack V. Fluorescent circular lamp adapter. 267,978, 2-15-83, Cl. D26-26.000.

Minnesota Mining and Manufacturing Company: *See*—
Seim, William J.; and Houts, Ronald C., 267,943, Cl. D13-24.000.

Miyake, Takao: *See*—
Haruguchi, Kenichi; Miyake, Takao; Numano, Masafumi; and Tsujimoto, Kazuo, 267,923, Cl. D7-351.000.

Moldex/Metric Products, Inc.: *See*—
Huber, Otto L., 267,985, Cl. D29-08.000.

Montague, Fred W., Jr. Electric candlestick or the like. 267,981, 2-15-83, Cl. D26-96.000.

Moore, John S. Game board. 267,960, 2-15-83, Cl. D21-15.000.

Nilles, John D.; Stankiewicz, Stanley L.; and Zubriski, David S., to American Hospital Supply Corporation. Dental handpiece motor. 267,974, 2-15-83, Cl. D24-12.000.

Nippon Interphone Co. Ltd.: *See*—
Sawaya, Osamu, 267,945, Cl. D14-54.000.

Nortman, Jeffrey: *See*—
Gibstein, Edward; and Nortman, Jeffrey, 267,980, Cl. D26-37.000.

Numano, Masafumi: *See*—
Haruguchi, Kenichi; Miyake, Takao; Numano, Masafumi; and Tsujimoto, Kazuo, 267,923, Cl. D7-351.000.

Oanh, Pham P. Combined game and carrying case. 267,962, 2-15-83, Cl. D21-55.000.

O'Bar, Edward J.: *See*—
Jannell, Walter D.; McIntosh, Howard N.; and O'Bar, Edward J., 267,936, Cl. D12-96.000.

Owens, Georgette. Hanger. 267,919, 2-15-83, Cl. D6-247.000.

Pagani, David A.: *See*—
Alwell, Anne T.; Fogarty, A. Edward; Fogarty, Bonnie R.; Pagani, David A.; and Pook, Peter D., 267,963, Cl. D21-168.000.

Pendelfin Studios Limited: *See*—
Heap, Jean W., 267,934, Cl. D11-162.000.

Pittenger, Teresa R. B., to Amerock Corporation. Pull. 267,926, 2-15-83, Cl. D8-318.000.

Pook, Peter D.: *See*—
Alwell, Anne T.; Fogarty, A. Edward; Fogarty, Bonnie R.; Pagani, David A.; and Pook, Peter D., 267,963, Cl. D21-168.000.

Quartzpower, Inc.: *See*—
Harrison, Marc, 267,971, Cl. D23-123.000.

R. J. Custom Firescreen, Incorporated: *See*—
Schockemoehl, Robert J.; and Lingwall, David K., 267,972, Cl. D23-128.000.

Rausch, Karl. Dining chair. 267,912, 2-15-83, Cl. D6-74.000.

Rhoades, Benjamin A. Fireplace tool holder. 267,924, 2-15-83, Cl. D23-138.200.

Ricoh Company, Ltd.: *See*—
Kato, Takaharu, 267,955, Cl. D16-8.000.
Kojima, Fumiyo; and Yoshihama, Manzo, 267,948, Cl. D14-94.000.

Robinett, Frederick A.; and Shook, James M., to FMC Corporation. Fire truck crew cab. 267,935, 2-15-83, Cl. D12-13.000.

Rodger, Michael, to Gordon Ellis and Company. Bath seat. 267,969, 2-15-83, Cl. D23-71.000.

Ross Operating Valve Company: *See*—
Beach, Earl; and Matle, Calvin, 267,968, Cl. D23-1.000.

Rutherford, David G.: *See*—
Helling, Bernd; Zarro, Michael S.; and Rutherford, David G., 267,947, Cl. D14-94.000.

Ryder, Francis E.: *See*—
Thomas, Michael D.; and Ryder, Francis E., 267,910, Cl. D3-34.000.

Ryder International Corporation: *See*—
Thomas, Michael D.; and Ryder, Francis E., 267,910, Cl. D3-34.000.

S. C. Johnson & Son, Inc.: *See*—
Corba, Robert E., 267,930, Cl. D9-448.000.

Sawara, Kenji, to Fuji Koeki Corporation. Combined camera/flash unit. 267,954, 2-15-83, Cl. D16-6.000.

Sawaya, Osamu, to Nippon Interphone Co. Ltd. Video television receiver. 267,945, 2-15-83, Cl. D14-54.000.

Schockemoehl, Robert J.; and Lingwall, David K., to R. J. Custom Firescreen, Incorporated. Fireplace closure device. 267,972, 2-15-83, Cl. D23-128.000.

Schwab, Jean-Claude; and Bannwart, Rene, to Corum, Ries, Bannwart & Co. Pendant watch. 267,931, 2-15-83, Cl. D10-39.000.

Schweizer, Riccardo. Combined cooking plate, drip pan tray and support stand. 267,922, 2-15-83, Cl. D7-363.000.

Seim, William J.; and Houts, Ronald C., to Minnesota Mining and Manufacturing Company. Conical double end cap for use with a cable splice case. 267,943, 2-15-83, Cl. D13-24.000.

Sharp Corporation: *See*—
Haruguchi, Kenichi; Miyake, Takao; Numano, Masafumi; and Tsujimoto, Kazuo, 267,923, Cl. D7-351.000.
Kosako, Mikio; and Ishida, Katsuhiro, 267,946, Cl. D14-94.000.

Shook, James M.: *See*—
Robinett, Frederick A.; and Shook, James M., 267,935, Cl. D12-13.000.

Sidrak, Fahim R. Protractor. 267,932, 2-15-83, Cl. D10-65.000.

Singer Company, The: *See*—
Lenger, Sidney A., Jr., 267,915, Cl. D6-153.000.
Lenger, Sidney A., Jr., 267,916, Cl. D6-154.000.

Smith, Otto J. M. Wind turbine system. 267,951, 2-15-83, Cl. D15-1.000.
Smith, Robert C., to Unette Corporation. Dispensing container. 267,927, 2-15-83, Cl. D9-302.000.
Stankiewicz, Stanley L.: *See*—
Nilles, John D.; Stankiewicz, Stanley L.; and Zubriski, David S., 267,974, Cl. D24-12.000.
Sunbeam Corporation: *See*—
Gronwick, Jerry P., 267,970, Cl. D23-120.000.
Termiflex Corporation: *See*—
Ault, Charles M., 267,950, Cl. D14-115.000.
Thomas, Michael D.; and Ryder, Francis E., to Ryder International Corporation. Casing for a contact lens case. 267,910, 2-15-83, Cl. D3-34.000.
Tong, King Sing: *See*—
Cheung, Kwok K., 267,983, Cl. D28-67.000.
Tong, Wing Kui: *See*—
Cheung, Kwok K., 267,983, Cl. D28-67.000.
Torterotot, Roland, to Etudes Realisations de Chaines Automatiques. Food container. 267,929, 2-15-83, Cl. D9-370.000.
Tsujimoto, Kazuo: *See*—
Haruguchi, Kenichi; Miyake, Takao; Numano, Masafumi; and Tsujimoto, Kazuo, 267,923, Cl. D7-351.000.
Unette Corporation: *See*—
Smith, Robert C., 267,927, Cl. D9-302.000.
van Amerongen, Edward; Cammarata, Frank, III; and Virag, Robert A., to Baxter Travenol Laboratories, Inc. Nebulizer cup. 267,975, 2-15-83, Cl. D24-62.000.
Vintzel, Constantine; and McDaniel, George H., to Bendix Corporation, The. Control panel. 267,944, 2-15-83, Cl. D13-35.000.
Virag, Robert A.: *See*—
van Amerongen, Edward; Cammarata, Frank, III; and Virag, Robert A., 267,975, Cl. D24-62.000.
Watanabe Kyogu Co., Ltd.: *See*—
Watanabe, Tetsuro, 267,958, Cl. D19-61.000.
Watanabe, Tetsuro, to Watanabe Kyogu Co., Ltd. Planisphere. 267,958, 2-15-83, Cl. D19-61.000.
Wernig, Clara Z.: *See*—
Hammer, Claire W.; and Wernig, Clara Z., 267,976, Cl. D24-64.000.
Wollard Aircraft Equipment, Inc.: *See*—
Drozd, Otto, 267,977, Cl. D25-1.000.
Womack, James A.: *See*—
Long, Jerry M.; and Womack, James A., 267,911, Cl. D3-35.000.
Yoshihama, Manzo: *See*—
Kojima, Fumiyo; and Yoshihama, Manzo, 267,948, Cl. D14-94.000.
Zarro, Michael S.: *See*—
Helling, Bernd; Zarro, Michael S.; and Rutherford, David G., 267,947, Cl. D14-94.000.
Zubriski, David S.: *See*—
Nilles, John D.; Stankiewicz, Stanley L.; and Zubriski, David S., 267,974, Cl. D24-12.000.

LIST OF PLANT PATENTEES

Duivenvoorden, Gerardus J. C. Rose plant. 4,982, 2-15-83, Cl. 25.000.
E. G. Hill Co., Inc.: *See*—
Jelly, Robert G., 4,983, Cl. 26.000.
Jelly, Robert G., to E. G. Hill Co., Inc. Seedling rose named Hilset. 4,983, 2-15-83, Cl. 26.000.

CLASSIFICATION OF PATENTS

ISSUED FEBRUARY 15, 1983

NOTE.—First number, class; second number, subclass; third number, patent number

CLASS 2	
2	4,373,211
8	4,373,212
16	4,373,213
51	4,373,214
239	4,373,215
CLASS 3	
1.5	4,373,216
1.9	4,373,217
13	4,373,218
CLASS 4	
300	4,373,219
508	4,373,220
559	4,373,221
CLASS 5	
431	4,373,222
CLASS 7	
151	4,373,223
CLASS 8	
527	4,373,930
CLASS 15	
1.5 A	4,373,224
104.06 A	4,373,225
302	4,373,226
347	4,373,227
350	4,373,228
CLASS 16	
125	4,373,229
288	4,373,230
CLASS 17	
1 F	4,373,231
11	4,373,232
CLASS 19	
236	4,373,233
CLASS 24	
191	4,373,234
285	4,373,235
CLASS 29	
3	4,373,236
116 AD	4,373,238
132	4,373,239
156.4 R	4,373,240
156.8 P	4,373,241
157.1 R	4,373,242
157.3 D	4,373,243
402.08	4,373,244
416	4,373,245
426.4	4,373,246
426.6	4,373,247
571	4,373,248
	4,373,249
	4,373,250
	4,373,251
576 B	4,373,252
	4,373,253
578	4,373,254
580	4,373,255
598	4,373,256
736	4,373,257
764	4,373,258
840	4,373,259
	4,373,260
861	4,373,261
882	4,373,262
CLASS 30	
294	4,373,263
374	4,373,264
383	4,373,265
CLASS 33	
129	4,373,266
168 R	4,373,267
179.5 R	4,373,268
246	4,373,269
270	4,373,270
361	4,373,271
CLASS 34	
57 A	4,373,272
104	4,373,273
CLASS 36	
2.6	4,373,274
129	4,373,275
CLASS 37	
61	4,373,276
67	4,373,277
71	4,373,278
CLASS 40	
155	4,373,279
367	4,373,280
491	4,373,281
546	4,373,282
564	4,373,283
576	4,373,284
CLASS 42	
90	4,373,285
CLASS 43	
10	4,373,286
17	4,373,287
100	4,373,288
CLASS 46	
1 R	4,373,289
44	4,373,290
133	4,373,291
153	4,373,292
206	4,373,293
CLASS 49	
388	4,373,294
435	4,373,295
CLASS 51	
3	4,373,296
84 R	4,373,297
105 LG	4,373,298
122	4,373,299
131.1	4,373,302
270	4,373,300
281 C	4,373,301
309	4,373,933
	4,373,934
CLASS 52	
40	4,373,303
73	4,373,304
86	4,373,305
98	4,373,306
167	4,373,307
173 R	4,373,308
182	4,373,309
	4,373,310
282	4,373,311
309.9	4,373,312
397	4,373,313
434	4,373,314
522	4,373,315
CLASS 53	
67	4,373,316
412	4,373,317
540	4,373,318
573	4,373,319
589	4,373,320
CLASS 54	
49	4,373,321
CLASS 55	
33	4,373,935
97	4,373,936
118	4,373,937
160	4,373,938
287	4,373,939
328	4,373,940
401	4,373,941
CLASS 56	
27.5	4,373,323
126	4,373,322
CLASS 59	
78.1	4,373,324
CLASS 60	
39.06	4,373,325
39.161	4,373,326
39.37	4,373,327
226.2	4,373,328
305	4,373,329
311	4,373,330
323	4,373,331
426	4,373,332
578	4,373,333
594	4,373,334
602	4,373,335
606	4,373,336
611	4,373,337
641.7	4,373,338
649	4,373,339
677	4,373,340
721	4,373,341
748	4,373,342
CLASS 62	
12	4,373,942
62	4,373,344
79	4,373,345
	4,373,346
112	4,373,347
115	4,373,348
156	4,373,349
	4,373,350
160	4,373,351
196 C	4,373,352
200	4,373,353
238.6	4,373,343
	4,373,354
256	4,373,355
468	4,373,356
514 JT	4,373,357
CLASS 65	
10.1	4,373,943
23	4,373,944
CLASS 66	
131	4,373,360
178 R	4,373,361
CLASS 68	
9	4,373,362
CLASS 69	
28	4,373,363
CLASS 71	
92	4,373,945
CLASS 72	
8	4,373,364
52	4,373,365
75	4,373,366
250	4,373,367
344	4,373,368
347	4,373,369
349	4,373,370
379	4,373,371
406	4,373,372
413	4,373,373
CLASS 73	
19	4,373,374
	4,373,375
23	4,373,377
23.1	4,373,376
35	4,373,378
40.5 R	Re.31,148
	4,373,379
	4,373,380
	4,373,381
53	4,373,382
118	4,373,383
119 A	4,373,384
146.5	4,373,385
189	4,373,386
204	4,373,387
301	4,373,388
304 C	4,373,389
	4,373,390
335	4,373,391
336.5	4,373,392
432 R	4,373,393
606	4,373,394
607	4,373,395
651	4,373,396
721	4,373,397
738	4,373,398
777	4,373,399
861.12	4,373,400
861.18	4,373,401
862.39	4,373,402
CLASS 74	
337.5	4,373,403
424.8 B	4,373,404
531	4,373,405
613	4,373,406
650	4,373,407
687	4,373,359
	4,373,408
745	4,373,409
CLASS 75	
0.5 BB	4,373,947
5	4,373,946
57	4,373,948
60	4,373,949
68 R	4,373,950
123 N	4,373,951
244	4,373,952
CLASS 76	
108 A	4,373,410
CLASS 82	
44	4,373,411
CLASS 83	
24	4,373,412
123	4,373,413
414	4,373,414
CLASS 84	
1.01	4,373,415
	4,373,416
1.16	4,373,417
404	4,373,418
411 R	4,373,419
CLASS 89	
1.812	4,373,420
33 CA	4,373,422
191 A	4,373,423
CLASS 91	
20	4,373,424
227	4,373,425
396	4,373,426
CLASS 92	
88	4,373,427
159	4,373,428
CLASS 99	
375	4,373,429
468	4,373,430
483	4,373,431
542	4,373,432
CLASS 100	
37	4,373,433
43	4,373,434
49	4,373,435
CLASS 101	
27	4,373,436
35	4,373,437
93.04	4,373,438
93.09	4,373,439
93.34	4,373,440
127.1	4,373,441
207	4,373,442
221	4,373,443
228	4,373,444
365	4,373,445
CLASS 105	
224.1	4,373,446
399	4,373,447
CLASS 106	
16	4,373,953
20	4,373,954
88	4,373,955
90	4,373,956
93	4,373,957
118	4,373,958
194	4,373,959
281 R	4,373,960
	4,373,961
288 Q	4,373,962
304	4,373,963
308 Q	4,373,964
CLASS 108	
29	4,373,448
60	4,373,449
CLASS 109	
75	4,373,450
CLASS 110	
101 CC	4,373,451
203	4,373,452
216	4,373,453
347	4,373,454
CLASS 111	
86	4,373,455
88	4,373,456
CLASS 112	
96	4,373,457
121.12	4,373,458
158 E	4,373,459
162	4,373,460
274	4,373,461
CLASS 114	
74 R	4,373,462
218	4,373,463
CLASS 116	
63 R	4,373,464
227	4,373,465
315	4,373,466
CLASS 118	
103	4,373,985
211	4,373,467
652	4,373,469
658	4,373,468
720	4,373,470
CLASS 119	
72	4,373,471
CLASS 122	
14	4,373,472
20 B	4,373,473
CLASS 123	
56 B	4,373,474
59 B	4,373,475
80 D	4,373,476
90.55	4,373,477
169 R	4,373,478
187.5 R	4,373,479
195 A	4,373,480
198 C	4,373,483
198 F	4,373,481
198 R	4,373,482
241	4,373,484
340	4,373,485
414	4,373,486
418	4,373,487
	4,373,488
422	4,373,489
452	4,373,490
472	4,373,491
502	4,373,492
512	4,373,502
525	4,373,493
538	4,373,494
568	4,373,495
569	4,373,496
571	4,373,497
	4,373,498
574	4,373,499
587	4,373,500
589	4,373,501
CLASS 124	
20 R	4,373,503
CLASS 126	
21 A	4,373,504
39 E	4,373,505
67	4,373,506
289	4,373,507
298	4,373,508
299 D	4,373,509
307 A	4,373,510
369	4,373,511
418	4,373,512
422	4,373,513
438	4,373,514
	4,373,515
CLASS 128	
57	4,373,516
75	4,373,517
92 EB	4,373,518
156	4,373,519
201.19	4,373,520
202.13	4,373,521
206.12	4,373,522
207.18	4,373,523
214 E	4,373,525
214 R	4,373,524
215	4,373,526
260	4,373,527
276	4,373,528
285	4,373,529
334 R	4,373,530
419 PG	4,373,531
660	4,373,532
663	4,373,533
725	4,373,534
765	4,373,535
CLASS 130	
9 R	4,373,536
27 R	4,373,537
CLASS 131	
109 R	4,373,538
209	4,373,539
CLASS 132	
84 R	4,373,541
CLASS 136	
256	Re.31,151
CLASS 137	
72	4,373,542
74	4,373,543
220	4,373,544
240	4,373,545
330	4,373,546
377	4,373,547
460	4,373,548
487.5	4,373,549
516.29	4,373,550
614.06	4,373,551
625.48	4,373,552
840	4,373,553
CLASS 138	
137	4,373,554
140	4,373,555
	4,373,556
CLASS 139	
142	4,373,557
CLASS 140	
71 R	4,373,558
CLASS 141	
18	4,373,559
129	4,373,560
330	4,373,561
CLASS 144	
144.5 R	4,373,562
357	4,373,563
366	4,373,564
CLASS 145	
36	4,373,565
CLASS 148	
1.5	4,373,965
	4,373,966
2	4,373,967
6.2	4,373,968
9.5	4,373,969
11.5 C	4,373,970
12 B	4,373,972
12 EA	4,373,971
12.4	4,373,973
24	4,373,974
189	4,373,975
CLASS 149	
92	4,373,976
CLASS 152	
353 G	4,373,566
405	4,373,567
CLASS 156	
51	4,373,977
69	4,373,978
73.1	4,373,979
160	4,373,980
164	4,373,981

359 4,373,982
423 4,373,983
477.1 4,373,984
552 4,373,986
574 4,373,987
622 4,373,988
635 4,373,989
643 4,373,990
645 4,373,991

CLASS 160

184 4,373,568
263 4,373,569
352 4,373,570

CLASS 162

145 4,373,992
347 4,373,993

CLASS 164

467 4,373,571

CLASS 165

1 4,373,572
2 4,373,573
4,373,574
7 4,373,575
48 R 4,373,576
122 4,373,577
141 4,373,578
167 4,373,579
173 4,373,580

CLASS 166

53 4,373,581
65 R 4,373,582
113 4,373,583
117.7 4,373,584
263 4,373,585
4,373,586
324 4,373,587

CLASS 169

19 4,373,588

CLASS 171

31 4,373,589

CLASS 172

78 4,373,590
328 4,373,591

CLASS 174

21 C 4,374,298
36 4,374,299

CLASS 175

61 4,373,592
329 4,373,593
393 4,373,594

CLASS 177

147 4,373,595
212 4,373,596

CLASS 179

1 AT 4,374,300
1 R 4,374,301
1 SM 4,374,302
2 BC 4,374,303
15.55 R 4,374,304
16 EA 4,374,305
81 R 4,374,306
84 T 4,374,307
99 LS 4,374,308

CLASS 180

70 MS 4,373,597
143 4,373,598
148 4,373,599
212 4,373,600
226 4,373,601
227 4,373,602
236 4,373,603
247 4,373,604
308 4,373,605

CLASS 181

151 4,373,606
166 4,373,607
202 4,373,608

CLASS 182

178 4,373,609

CLASS 184

6.4 4,373,421

CLASS 186

64 4,373,611

CLASS 187

29 R 4,373,610
4,373,612

CLASS 188

43 4,373,613
72.3 4,373,614
73.1 4,373,615
73.45 4,373,616

CLASS 192

0.09 4,373,619
3.31 4,373,617
4 B 4,373,618
41 A 4,373,620
81 C 4,373,621
85 AA 4,373,622

CLASS 193

14 4,373,623

CLASS 198

347 4,373,624
804 4,373,625

CLASS 200

61.42 4,374,309
61.54 4,374,310
269 4,374,311

CLASS 201

22 4,373,994

CLASS 202

95 4,373,995
173 4,373,996
230 4,373,997
258 4,373,998

CLASS 203

6 4,373,999
9 4,374,000

CLASS 204

2 4,374,001
7 4,374,002
11 4,374,003
15 4,374,004
4,374,005
43 G 4,374,006
51 4,374,007
109 4,374,008
129.1 4,374,009
157.1 R 4,374,010
192 EC 4,374,011
192 SP 4,374,012
195 B 4,374,013
260 4,374,014

CLASS 206

45.14 4,373,626
201 4,373,627
349 4,373,628
350 4,373,629
434 4,373,630
438 4,373,631
457 4,373,632
508 4,373,633
520 4,373,634
525 4,373,635
551 4,373,636
600 4,373,637

CLASS 208

8 LE 4,374,015
10 4,374,016
11 LE 4,374,023
11 R 4,374,017
112 4,374,018
120 4,374,019
216 R 4,374,020
251 R 4,374,021
310 Z 4,374,022

CLASS 209

570 4,373,638

CLASS 210

140 4,374,025
241 4,374,024
493.5 4,374,026
608 4,374,027
669 4,374,028
671 4,374,029
758 4,374,030

CLASS 211

86 4,373,639

CLASS 215

228 4,373,640
331 4,373,641

CLASS 219

69 E 4,374,313
121 LD 4,374,315
121 LJ 4,374,314
209 4,374,316
345 4,374,312
385 4,374,317
400 4,374,318
4,374,319
413 4,374,320
497 4,374,321

CLASS 220

72 4,373,642
450 4,373,643

CLASS 222

153 4,373,644
203 4,373,645
327 4,373,646
528 4,373,647

CLASS 223

28 4,373,648

CLASS 224

163 4,373,649

CLASS 225

97 4,373,650

CLASS 227

3 4,373,651
100 4,373,652

CLASS 228

104 4,373,653
173 R 4,373,654
180 R 4,373,655
203 4,373,656
229 4,373,657
242 4,373,658

CLASS 229

32 4,373,659
87 F 4,373,661

CLASS 236

10 4,373,662
15 R 4,373,663
46 R 4,373,664

CLASS 237

12.3 A 4,373,665
12.3 B 4,373,666

CLASS 238

349 4,373,667

CLASS 239

74 4,373,668
124 4,373,669
172 4,373,670
585 4,373,671
703 4,373,672
4,373,673

CLASS 241

15 4,373,674
23 4,373,675
36 4,373,676
37.5 4,373,677
189 R 4,373,678
275 4,373,679

CLASS 242

7.02 4,373,680
25 A 4,373,681
55.2 4,373,682
84.21 R 4,373,683
107.6 4,373,684
118.6 4,373,685
158.2 4,373,686
163 4,373,687

CLASS 244

3.24 4,373,688
87 4,373,689
173 4,373,690

CLASS 246

34 CT 4,373,691

CLASS 248

162.1 4,373,692
221.4 4,373,693
246 4,373,694
318 4,373,695
604 4,373,696

CLASS 250

201 4,374,323
4,374,324
213 VT 4,374,325
226 4,374,322
255 4,374,326
442.1 4,374,327
458.1 4,374,328
574 4,374,329

CLASS 251

26 4,373,698
129 4,373,697
139 4,373,699
214 4,373,700

CLASS 252

8.8 4,374,031
49.6 4,374,032
4,374,033
51.5 A 4,374,034
91 4,374,035
135 4,374,036
301.4 S 4,374,037
305 4,374,038
384 4,374,039
389 A 4,374,040
412 4,374,042
426 4,374,057
435 4,374,043
455 R 4,374,044
455 Z 4,374,045
466 B 4,374,046
472 4,374,047
500 4,374,048
519 4,374,049
4,374,050
522 R 4,374,051
4,374,052
4,374,053
4,374,054
4,374,055
546 4,374,056
556 4,374,058

CLASS 254

122 4,373,701

CLASS 260

112 R 4,374,061
112.5 R 4,374,060
4,374,062
118 4,374,063
147 4,374,064
245.2 R 4,374,065
440 4,374,066
456 A 4,374,067
465 D 4,374,068
465.4 4,374,069
549 4,374,070

CLASS 261

109 4,374,071
4,374,072

CLASS 264

3 R 4,374,073
8 4,374,074
4,374,075
19 4,374,076
22 4,374,077
35 4,374,078
46.1 4,374,079
102 4,374,080
4,374,081
129 4,374,082

CLASS 266

111 4,373,702
131 4,373,703
225 4,373,704
227 4,373,705
252 4,373,706

CLASS 267

64.12 4,373,707
136 4,373,708

CLASS 269

328 4,373,709

CLASS 270

55 4,373,710

CLASS 271

171 4,373,711
272 4,373,712
303 4,373,713
310 4,373,714

CLASS 272

1 R 4,373,715
67 4,373,717
137 4,373,716

CLASS 273

1 E 4,373,719
29 A 4,373,720
73 A 4,373,721
75 4,373,718
85 G 4,373,722
86 B 4,373,723
89 4,373,724
121 A 4,373,725
138 A 4,373,726
143 R 4,373,727
144 B 4,373,728
153 S 4,373,729
155 4,373,730
262 4,373,731
271 4,373,732
381 4,373,733
411 4,373,734

CLASS 277

235 B 4,373,735

CLASS 279

39 R 4,373,660

CLASS 280

11.23 4,373,736
30 4,373,737
81.5 4,373,738
111 4,373,739
269 4,373,740
279 4,373,741
633 4,373,742
661 4,373,743
707 4,373,744
752 4,373,745
4,373,746
802 4,373,747
806 4,373,748
807 4,373,749

CLASS 285

55 4,373,750
137 R 4,373,751
141 4,373,752
319 4,373,753
334 4,373,754

CLASS 294

67 R 4,373,755

CLASS 297

153 4,373,756

CLASS 299

43 4,373,757

CLASS 305

22 4,373,758

CLASS 307

132 E 4,374,330
291 4,374,331
304 4,374,332
309 4,374,333
355 4,374,334
521 4,374,335

CLASS 308

179.5 4,373,760
187.2 4,373,759

CLASS 310

154 4,374,336
186 4,374,337

CLASS 312

250 4,373,761

CLASS 313

142 4,374,338
218 4,374,339
220 4,374,340
414 4,374,341
4,374,342
422 4,374,343
479 4,374,344

CLASS 315

241 P 4,374,345
276 4,374,346

CLASS 318

138 4,374,347
443 4,374,348
568 4,374,349
590 4,374,350
600 4,374,351
762 4,374,352
799 4,374,353

CLASS 320

2 4,374,354
43 4,374,355

CLASS 323

273 4,374,356
351 4,374,357

CLASS 324

78 D 4,374,358
96 4,374,359
309 4,374,360

CLASS 328

120 4,374,361
162 4,374,362

CLASS 330

263 4,374,363
298 4,374,364

CLASS 331

111 4,374,366

CLASS 333

24.1 4,374,367
128 4,374,368
182 4,374,369
202 4,374,370

CLASS 337

159 4,374,371
380 4,374,372
383 4,374,373

CLASS 338

114 4,374,374

CLASS 339

31 B 4,373,762
4,373,763
75 MP 4,373,764
4,373,765
91 R 4,373,766
94 C 4,373,767
97 R 4,373,769
113 R 4,373,770
125 L 4,373,771
130 R 4,373,772
262 R 4,373,773

CLASS 340

52 A 4,374,375
84 4,374,376
384 E 4,374,377
388 Re.31,152
566 4,374,378
604 4,374,379
660 4,374,380
711 4,374,381
870.01 4,374,382
870.37 4,374,383
870.38 4,374,384

CLASS 346

1.1 4,374,385
75 4,374,386
4,374,387
140 R 4,374,388

CLASS 350

6.6 4,373,774
96.15 4,373,775
96.20 4,373,776
4,373,777
4,373,778
96.21 4,373,779
96.25 4,373,780
96.29 4,373,781
96.34 4,373,768
166 4,373,782
310 4,373,783
336 4,373,784
414 4,373,785
432 4,373,786

CLASS 351

43 4,373,788
158 4,373,789
210 4,373,787

CLASS 354

24 4,373,790
25 4,373,791
31 4,373,793
33 4,373,792
122 4,373,794
173 4,373,795
4,373,796
234 4,373,797

CLASS 355

3 DD 4,373,798
3 R 4,373,799
10 4,373,800
14 FU 4,373,801
4,373,802
49 4,373,803

CLASS 356

1 4,373,804
4 4,373,805
23 4,373,806
28.5 4,373,807
152 4,373,808
215 4,373,809
226 4,373,810
241 4,373,811
246 4,373,812
326 4,373,813
350 4,373,814
358 4,373,815
375 4,373,816
384 4,373,817
408 4,373,818
445 4,373,819

CLASS 357

13 4,374,389
17 4,374,390
4,374,391
23 4,374,392
30 4,374,393
81 4,374,394

CLASS 358

22 4,374,395
24 4,374,396
75 4,374,397
143 4,374,398
147 4,374,399

167 4,374,400

CLASS 360

96.5 4,374,401
104 4,374,402
113 4,374,403
128 4,374,404

CLASS 361

355 4,374,405

CLASS 362

253 4,374,406
432 4,374,407

CLASS 364

200 4,374,408
4,374,409
4,374,410
4,374,411
4,374,412
4,374,413
4,374,414
4,374,415
4,374,416
4,374,417
4,374,418
414 4,374,419
424 4,374,420
426 4,374,421
4,374,422
434 4,374,423
497 4,374,424
709 4,374,425
724 4,374,426
761 4,374,427
900 4,374,428
4,374,429

CLASS 365

104 4,374,430
174 4,374,431
209 4,374,432
230 Re.31,153

CLASS 366

101 4,373,820

CLASS 368

21 4,373,821
256 4,373,822

CLASS 369

136 4,374,433
170 4,374,434

CLASS 370

13 4,374,435

CLASS 371

11 4,374,436

CLASS 372

92 4,374,365

CLASS 376

306 4,374,083

CLASS 400

196.1 4,373,823
234 4,373,824

CLASS 402

80 L 4,373,825

CLASS 403

14 4,373,826
24 4,373,827
263 4,373,828
267 4,373,829
284 4,373,830
318 4,373,831
374 4,373,832

CLASS 405

36 4,373,833
60 4,373,834
195 4,373,835
217 4,373,836
218 4,373,837

CLASS 406

14 4,373,838

CLASS 408

59 4,373,839

CLASS 410

34 4,373,841

CLASS 411

377 4,373,842

CLASS 412

10 4,373,843
24 4,373,844

CLASS 414

225 4,373,840
326 4,373,845
331 4,373,846
401 4,373,847
403 4,373,848
408 4,373,849
470 4,373,856
699 4,373,850
722 4,373,851
723 4,373,852
732 4,373,853
742 4,373,854
744 R 4,373,855
786 4,373,857

CLASS 415

112 4,373,858
159 4,373,859
185 4,373,860
213 C 4,373,861

CLASS 416

61 4,373,862

CLASS 417

12 4,373,863
46 4,373,864
4,373,865
53 4,373,866
90 4,373,867
154 4,373,868
213 4,373,869
269 4,373,870
310 4,373,871
312 4,373,872
339 4,373,873
397 4,373,874
517 4,373,875
534 4,373,876

CLASS 418

2 4,373,877
23 4,373,878
35 4,373,879
150 4,373,880
195 4,373,881
270 4,373,882

CLASS 420

449 4,374,084
470 4,374,085
507 4,374,086

CLASS 422

34 4,374,087
46 4,374,088
64 Re.31,149
Re.31,150
70 4,374,089
98 4,374,090
114 4,374,091
199 4,374,092
202 4,374,093
218 4,374,094
4,374,095

CLASS 423

9 4,374,096
22 4,374,097
27 4,374,098
54 4,374,099
56 4,374,100
150 4,374,101
206 T 4,374,102
213.5 4,374,103
226 4,374,104
230 4,374,105
231 4,374,106
265 4,374,107
301 4,374,108
311 4,374,109
342 4,374,110
347 4,374,111
351 4,374,112
445 4,374,113
447.1 4,374,114
474 4,374,115
580 4,374,116
593 4,374,117
607 4,374,118
625 4,374,119

CLASS 424

19 4,374,121
48 4,374,122
49 4,374,123
54 4,374,124
70 4,374,125
81 4,374,126
89 4,373,540
4,374,127
180 4,374,128
4,374,129
184 4,374,130
200 4,374,131
241 4,374,132
244 4,374,133
246 4,374,134
251 4,374,135
4,374,136
258 4,374,137
4,374,138
260 4,374,139
263 4,374,140
266 4,374,141
270 4,374,142
273 R 4,374,143
274 4,374,144
278 4,374,145
282 4,374,146
283 4,374,147
317 4,374,148
330 4,374,149

CLASS 425

8 4,373,883
126 R 4,373,884
129 R 4,373,885
130 4,373,886
143 4,373,887
149 4,373,888
150 4,373,889
153 4,373,890
174.4 4,373,891
207 4,373,892
222 4,373,893
393 4,373,894
461 4,373,895

CLASS 426

19 4,374,150
4,374,151
39 4,374,152
321 4,374,153
565 4,374,154
569 4,374,155

CLASS 427

8 4,374,156
37 4,374,157
41 4,374,158
96 4,374,159
101 4,374,160
160 4,374,161
248.1 4,374,162
253 4,374,163
385.5 4,374,164
430.1 4,374,165

CLASS 428

35 4,374,166
141 4,374,167
212 4,374,168
221 4,374,169
224 4,374,170
288 4,374,171
308.4 4,374,172
325 4,374,173
341 4,374,174
369 4,374,175
392 4,374,176
4,374,177
404 4,374,178
411 4,374,179
421 4,374,180
423.3 4,374,181
446 4,374,182
641 4,374,183

CLASS 429

17 4,374,184
36 4,374,185
154 4,374,186
175 4,374,187
187 4,374,188

CLASS 430

2 4,374,189
19 4,374,190
100 4,374,191
108 4,374,192
149 4,374,193
199 4,374,194
499 4,374,195
505 4,374,196

CLASS 431

9 4,373,896
20 4,373,897
73 4,373,898
158 4,373,899
182 4,373,900
186 4,373,901
202 4,373,902
215 4,373,903
328 4,373,904
330 4,373,905
359 4,373,906

CLASS 432

83 4,373,907
109 4,373,908
4,373,909
118 4,373,910
152 4,373,911
222 4,373,912

CLASS 433

7 4,373,913
18 4,373,914
136 4,373,915

CLASS 434

22 4,373,916
209 4,373,917
307 4,373,918

CLASS 435

68 4,374,197
162 4,374,198
167 4,374,199
172 4,374,200
239 4,374,201

CLASS 436

60 4,374,041
501 4,373,932
539 4,373,931
546 4,374,120

CLASS 440

47 4,373,919
59 4,373,920
61 4,373,921
89 4,373,922

CLASS 445

3 4,373,237

CLASS 455

164 4,374,437
265 4,374,438

CLASS 464

36 4,373,923
38 4,373,924
48 4,373,358
158 4,373,925

CLASS 474

57 4,373,926
74 4,373,927

CLASS 493

103 4,373,928
355 4,373,929

CLASS 501

82 4,374,202
148 4,374,203

CLASS 521

28 4,374,204
38 4,374,206
85 4,374,205
107 4,374,207
109 4,374,208
116 4,374,209
159 4,374,210

CLASS 523

153 4,374,059
156 4,374,211
212 4,374,212
416 4,374,213
466 4,374,214
514 4,374,215

CLASS 524

35 4,374,216
47 4,374,217
86 4,374,218
91 4,374,219
94 4,374,220
4,374,221
241 4,374,222
245 4,374,223
298 4,374,224
302 4,374,225
399 4,374,226
528 4,374,227
599 4,374,228

CLASS 525

28 4,374,229
134 4,374,230
179 4,374,231
243 4,374,232
394 4,374,233

CLASS 526

105 4,374,234
262 4,374,235

CLASS 528

26.5 4,374,236
28 4,374,237
50 4,374,238
176 4,374,239
230 4,374,240
266 4,374,241
395 4,374,242
422 4,374,243

CLASS 542

476 4,374,244

CLASS 546

20 4,374,245
156 4,374,246

CLASS 548

135 4,374,248
146 4,374,247
201 4,374,249
305 4,374,250
309 4,374,251
343 4,374,252
360 4,374,253
527 4,374,254
531 4,374,255
561 4,374,256

CLASS 549

302 4,374,257
407 4,374,258
518 4,374,259
534 4,374,260

CLASS 560

51 4,374,261
56 4,374,262
204 4,374,263
205 4,374,264
263 4,374,265

CLASS 562

456 4,374,266
4,374,267
599 4,374,268
4,374,269
4,374,270

CLASS 564

310 4,374,271
315 4,374,272
479 4,374,273

CLASS 568

313 4,374,274
351 4,374,275
398 4,374,276
448 4,374,277
454 4,374,278
558 4,374,279
4,374,280
637 4,374,281
672 4,374,282
724 4,374,283
817 4,374,284
902 4,374,285
907 4,374,286
909 4,374,287
910 4,374,288

CLASS 570

168 4,374,289

CLASS 585

16 4,374,290
320 4,374,291
360 4,374,292
410 4,374,293
466 4,374,294
640 4,374,295
739 4,374,296
868 4,374,297

CLASSIFICATION OF DESIGNS

D1— 2 267,908
D2— 409 267,909
D3— 34 267,910
35 267,911
D6— 74 267,912
78 267,913
113 267,914
153 267,915
154 267,916
181 267,917
184 267,918
247 267,919
254 267,920
267,921
D7— 351 267,923
363 267,922
D8— 18 267,925
318 267,926
D9— 302 267,927
329 267,928
370 267,929
448 267,930
D10— 39 267,931
65 267,932
113 267,933
D11— 162 267,934
D12— 13 267,935
96 267,936
102 267,937
147 267,938
155 267,939
267,940
209 267,941
D13— 23 267,942
24 267,943
35 267,944
D14— 54 267,945
94 267,946
267,947
267,948
96 267,949
115 267,950
D15— 1 267,951
5 267,952
12 267,953
D16— 6 267,954
8 267,955
D17— 14 267,956
D18— 9 267,957
D19— 61 267,958
78 267,959
D21— 15 267,960
41 267,961
55 267,962
168 267,963
187 267,964
220 267,965
D22— 18 267,966
99 267,967
D23— 1 267,968
71 267,969
120 267,970
123 267,971
128 267,972
138.2 267,924
158 267,973
D24— 12 267,974
62 267,975
64 267,976
D25— 1 267,977
D26— 26 267,978
28 267,979
37 267,980
96 267,981
D28— 5 267,982
67 267,983
89 267,984
D29— 08 267,985

CLASSIFICATION OF PLANTS

P.— 25 4,982
26 4,983

GEOGRAPHICAL INDEX OF RESIDENCE OF INVENTORS

(U.S. States, Territories and Armed Forces, the Commonwealth of Puerto Rico, and the Canal Zone)

Alabama	1	Kentucky	21	Oregon	41
Alaska	2	Louisiana	22	Pennsylvania	42
American Samoa	3	Maine	23	Puerto Rico	43
Arizona	4	Maryland	24	Rhode Island	44
Arkansas	5	Massachusetts	25	South Carolina	45
California	6	Michigan	26	South Dakota	46
Canal Zone	7	Minnesota	27	Tennessee	47
Colorado	8	Mississippi	28	Texas	48
Connecticut	9	Missouri	29	Utah	49
Delaware	10	Montana	30	Vermont	50
District of Columbia	11	Nebraska	31	Virginia	51
Florida	12	Nevada	32	Virgin Islands	52
Georgia	13	New Hampshire	33	Washington	53
Guam	14	New Jersey	34	West Virginia	54
Hawaii	15	New Mexico	35	Wisconsin	55
Idaho	16	New York	36	Wyoming	56
Illinois	17	North Carolina	37	U.S. Air Force	57
Indiana	18	North Dakota	38	U.S. Army	58
Iowa	19	Ohio	39	U.S. Navy	59
Kansas	20	Oklahoma	40		

(First number in listing denotes location according to above key. Refer to patent number in body of the Official Gazette to obtain details as to inventor name, location, etc.)

PATENTS

01 :	4,373,278
	4,373,286
	4,373,846
	4,373,893
	4,374,016
	4,374,174
	4,374,426
04 :	4,373,255
	4,373,269
	4,373,515
	4,373,572
	4,373,603
	4,373,661
	4,373,674
	4,373,681
	4,373,733
	4,373,912
	4,374,110
	4,374,366
	4,374,376
	4,374,413
	4,374,414
05 :	4,373,300
	4,373,937
	4,374,199
	4,374,318
06 :	4,373,213
	4,373,219
	4,373,220
	4,373,232
	4,373,234
	4,373,240
	4,373,241
	4,373,250
	4,373,252
	4,373,253
	4,373,282
	4,373,289
	4,373,290
	4,373,307
	4,373,308
	4,373,313
	4,373,325
	4,373,339
	4,373,344
	4,373,355
	4,373,370
	4,373,375
	4,373,396
	4,373,404
	4,373,418
	4,373,420
	4,373,422
	4,373,440
	4,373,470
	4,373,508
	4,373,530
	4,373,532
	4,373,535
	4,373,550
	4,373,554
	4,373,558
	4,373,632
	4,373,650
	4,373,655
	4,373,659
	4,373,682
	4,373,689
	4,373,721
	4,373,729
	4,373,760
	4,373,768
	4,373,777
	4,373,782
	4,373,787
	4,373,813
	4,373,817
	4,373,820
	4,373,833
	4,373,837
	4,373,843
	4,373,863
	4,373,896
	4,373,914
	4,373,919
	4,373,974
	4,373,976
	4,373,984
	4,374,003
	4,374,009
	4,374,011
	4,374,023
	4,374,024
	4,374,030
	4,374,080
	4,374,082
	4,374,089
	4,374,094
	4,374,095
	4,374,106
	4,374,112
	4,374,124
	4,374,155
	4,374,178
	4,374,186
	4,374,189
	4,374,192
	4,374,220
	4,374,242
	4,374,271
	4,374,275
	4,374,291
	4,374,303
	4,374,315
	4,374,319
	4,374,323
	4,374,335
	4,374,352
	4,374,378
	4,374,402
	4,374,404
	4,374,408
	4,374,416
	4,374,418
	4,374,432
08 :	4,373,272
	4,373,417
	4,373,431
	4,373,590
	4,373,649
	4,373,710
	4,373,783
	4,373,815
	4,373,887
	4,373,961
	4,374,017
	4,374,076
	4,374,101
	4,374,321
	4,374,354
	4,374,386
	4,374,412
09 :	4,373,295
	4,373,328
	4,373,412
	4,373,544
	4,373,571
	4,373,573
	4,373,595
	4,373,644
	4,373,711
	4,373,756
	4,373,766
	4,373,862
	4,373,933
	4,373,970
	4,374,107
	4,374,122
	4,374,164
	4,374,185
	4,374,405
	4,374,435
10 :	4,373,502
	4,374,224
12 :	Re.31,149
	Re.31,150
	4,373,254
	4,373,346
	4,373,521
	4,373,534
	4,373,719
	4,373,767
	4,373,788
	4,373,860
	4,374,308
	4,374,417
	4,374,429
	4,374,436
13 :	4,373,302
	4,373,540
	4,373,627
	4,373,630
	4,373,685
	4,373,856
	4,373,958
	4,373,995
	4,374,411
15 :	4,373,432
17 :	4,373,211
	4,373,214
	4,373,283
	4,373,284
	4,373,294
	4,373,314
	4,373,345
	4,373,363
	4,373,372
	4,373,373
	4,373,398
	4,373,436
	4,373,449
	4,373,456
	4,373,460
	4,373,475
	4,373,479
	4,373,505
	4,373,510
	4,373,523
	4,373,559
	4,373,578
	4,373,588
	4,373,591
	4,373,626
	4,373,634
	4,373,641
	4,373,648
	4,373,669
	4,373,694
	4,373,697
	4,373,718
	4,373,725
	4,373,727
	4,373,739
	4,373,743
	4,373,758
	4,373,769
	4,373,789
	4,373,824
	4,373,842
	4,373,848
	4,373,920
	4,373,921
	4,373,955
	4,373,965
	4,373,973
	4,373,983
	4,374,042
	4,374,046
	4,374,102
	4,374,104
	4,374,105
	4,374,125
	4,374,286
	4,374,287
	4,374,299
	4,374,309
	4,374,328
	4,374,329
	4,374,353
	4,374,361
	4,374,375
	4,374,399
18 :	4,373,326
	4,373,356
	4,373,450
	4,373,486
	4,373,488
	4,373,497
	4,373,518
	4,373,575
	4,373,577
	4,373,614
	4,373,696
	4,373,811
	4,373,831
	4,373,838
	4,373,841
	4,373,849
	4,373,858
	4,373,859
	4,373,877
	4,373,901
	4,374,221
	4,374,434
19 :	4,373,545
	4,373,551
	4,373,621
	4,373,622
	4,373,852
	4,373,857
	4,374,407
20 :	4,373,299
	4,373,676
	4,373,869
	4,374,072
21 :	4,373,323
	4,373,350
	4,373,352
	4,373,882
	4,373,942
	4,374,019
	4,374,216
	4,374,300
22 :	Re.31,148
	4,373,380
	4,373,835
	4,373,913
	4,374,254
	4,374,255
	4,374,256
24 :	4,373,258
	4,373,291
	4,373,514
	4,373,527
	4,373,546
	4,373,553
	4,373,936
	4,373,960
	4,373,987
	4,374,014
	4,374,171
	4,374,201
	4,374,241
	4,374,273
	4,374,327
25 :	Re.31,151
	4,373,377
	4,373,458

	4,373,556
	4,373,570
	4,373,653
	4,373,687
	4,373,726
	4,373,781
	4,373,812
	4,373,834
	4,373,868
	4,373,952
	4,374,008
	4,374,012
	4,374,041
	4,374,061
	4,374,063
	4,374,073
	4,374,113
	4,374,206
	4,374,240
	4,374,298
	4,374,314
	4,374,381
26 :	4,373,221
	4,373,223
	4,373,229
	4,373,246
	4,373,264
	4,373,267
	4,373,271
	4,373,310
	4,373,329
	4,373,330
	4,373,348
	4,373,358
	4,373,371
	4,373,402
	4,373,403
	4,373,414
	4,373,465
	4,373,477
	4,373,482
	4,373,495
	4,373,501
	4,373,604
	4,373,605
	4,373,620
	4,373,633
	4,373,637
	4,373,642
	4,373,664
	4,373,671
	4,373,675
	4,373,692
	4,373,702
	4,373,737
	4,373,748
	4,373,871
	4,373,949
	4,373,959
	4,373,962
	4,373,985
	4,374,044
	4,374,085
	4,374,100
	4,374,103
	4,374,138
	4,374,156
	4,374,168
	4,374,170
	4,374,182
	4,374,200
	4,374,213
27 :	4,373,212
	4,373,227
	4,373,297
	4,373,349
	4,373,390
	4,373,419
	4,373,427
	4,373,4[illegible]3
	4,373,519
	4,373,600
	4,373,651
	4,373,662
	4,373,663
	4,373,844
	4,373,845
	4,373,897
	4,373,898
	4,373,978
	4,374,025
	4,374,077
	4,374,090
	4,374,169
	4,374,179
	4,374,362
	4,374,382
29 :	4,373,270
	4,373,494
	4,373,646
	4,373,652
	4,373,736
	4,373,873
	4,373,923
	4,374,033
	4,374,152
30 :	4,373,715
31 :	4,373,503
	4,373,794
	4,373,929
32 :	4,373,867
	4,373,926
33 :	4,373,273
	4,373,285
	4,373,467
	4,373,668
	4,373,688
	4,373,836
	4,374,333
34 :	4,373,274
	4,373,288
	4,373,292
	4,373,341
	4,373,353
	4,373,459
	4,373,476
	4,373,493
	4,373,539
	4,373,547
	4,373,569
	4,373,612
	4,373,625
	4,373,629
	4,373,636
	4,373,904
	4,373,917
	4,373,953
	4,373,991
	4,373,992
	4,373,994
	4,374,021
	4,374,032
	4,374,045
	4,374,053
	4,374,054
	4,374,055
	4,374,057
	4,374,067
	4,374,091
	4,374,093
	4,374,111
	4,374,114
	4,374,121
	4,374,123
	4,374,130
	4,374,131
	4,374,135
	4,374,137
	4,374,139
	4,374,161
	4,374,203
	4,374,211
	4,374,227
	4,374,230
	4,374,237
	4,374,239
	4,374,245
	4,374,262
	4,374,276
	4,374,277
	4,374,294
	4,374,295
	4,374,296
	4,374,297
	4,374,304
	4,374,343
	4,374,390
	4,374,391
	4,374,392
	4,374,394
	4,374,400
	4,374,428
	4,374,438
35 :	4,374,425
36 :	4,373,239
	4,373,279
	4,373,281
	4,373,391
	4,373,401
	4,373,423
	4,373,446
	4,373,452
	4,373,453
	4,373,478
	4,373,513
	4,373,517
	4,373,560
	4,373,608
	4,373,628
	4,373,693
	4,373,704
	4,373,728
	4,373,740
	4,373,762
	4,373,763
	4,373,773
	4,373,778
	4,373,780
	4,373,785
	4,373,799
	4,373,803
	4,373,805
	4,373,918
	4,373,935
	4,373,938
	4,373,941
	4,373,944
	4,373,948
	4,373,986
	4,374,001
	4,374,005
	4,374,036
	4,374,049
	4,374,066
	4,374,086
	4,374,092
	4,374,117
	4,374,132
	4,374,141
	4,374,149
	4,374,151
	4,374,154
	4,374,165
	4,374,190
	4,374,194
	4,374,195
	4,374,196
	4,374,197
	4,374,212
	4,374,214
	4,374,219
	4,374,233
	4,374,236
	4,374,246
	4,374,248
	4,374,249
	4,374,253
	4,374,266
	4,374,267
	4,374,283
	4,374,289
	4,374,334
	4,374,341
	4,374,342
	4,374,355
	4,374,365
	4,374,368
	4,374,389
	4,374,397
	4,374,406
	4,374,415
37 :	4,373,361
	4,373,506
	4,374,028
	4,374,146
	4,374,228
	4,374,384
39 :	4,373,222
	4,373,262
	4,373,333
	4,373,405
	4,373,406
	4,373,615
	4,373,617
	4,373,645
	4,373,666
	4,373,709
	4,373,722
	4,373,771
	4,373,851
	4,373,864
	4,373,865
	4,373,870
	4,373,892
	4,373,934
	4,373,956
	4,374,034
	4,374,035
	4,374,043
	4,374,079
	4,374,109
	4,374,126
	4,374,148
	4,374,167
	4,374,181
	4,374,183
	4,374,198
	4,374,205
	4,374,229
	4,374,235
	4,374,238
	4,374,268
	4,374,269
	4,374,270
	4,374,293
	4,374,320
	4,374,372
	4,374,379
	4,374,422
40 :	4,373,298
	4,373,312
	4,373,322
	4,373,542
	4,373,581
	4,373,683
	4,373,902
	4,374,015
	4,374,234
41 :	4,373,541
	4,373,816
	4,373,939
	4,374,437
42 :	4,373,215
	4,373,242
	4,373,261
	4,373,280
	4,373,381
	4,373,437
	4,373,443
	4,373,451
	4,373,464
	4,373,471
	4,373,504
	4,373,549
	4,373,576
	4,373,609
	4,373,640
	4,373,658
	4,373,678
	4,373,713
	4,373,716
	4,373,761
	4,373,822
	4,373,889
	4,373,906
	4,373,967
	4,373,968
	4,373,990
	4,373,998
	4,374,018
	4,374,050
	4,374,059
	4,374,060
	4,374,075
	4,374,081
	4,374,099
	4,374,427
	4,374,140
	4,374,142
	4,374,153
	4,374,159
	4,374,163
	4,374,177
	4,374,184
	4,374,207
	4,374,218
	4,374,232
	4,374,244
	4,374,252
	4,374,301
	4,374,338
	4,374,351
	4,374,363
44 :	4,373,236
	4,373,507
45 :	4,373,850
	4,373,927
	4,373,928
	4,374,068
	4,374,202
46 :	4,373,905
47 :	4,373,500
	4,373,543
	4,373,734
	4,374,002
	4,374,040
	4,374,070
	4,374,265
48 :	4,373,216
	4,373,218
	4,373,248
	4,373,347
	4,373,351
	4,373,354
	4,373,410
	4,373,442
	4,373,582
	4,373,583
	4,373,584
	4,373,585
	4,373,586
	4,373,587
	4,373,592
	4,373,594
	4,373,606
	4,373,607
	4,373,639
	4,373,654
	4,373,700
	4,373,717
	4,373,752
	4,373,753
	4,373,754
	4,373,825
	4,373,894
	4,373,940
	4,373,982
	4,374,000
	4,374,020
	4,374,097
	4,374,115
	4,374,150
	4,374,210
	4,374,222
	4,374,259
	4,374,260
	4,374,285
	4,374,307
	4,374,312
	4,374,317
	4,374,357
	4,374,383
	4,374,395
50 :	4,373,966
51 :	4,373,263
	4,373,393
	4,373,484
	4,373,562
	4,373,656
	4,373,690
	4,373,695
	4,373,720
	4,373,724
	4,373,732
	4,373,775
	4,373,779
	4,373,810
	4,373,915
	4,373,989
	4,374,048
53 :	4,373,408
	4,373,426
	4,373,430
	4,373,466
	4,373,611
	4,373,619
	4,373,647
	4,373,660
	4,374,027
	4,374,058
54 :	4,373,454
	4,373,853
	4,373,874
	4,374,215
	4,374,226
	4,374,278
	4,374,288
55 :	Re.31,153
	4,373,287
	4,373,324
	4,373,384
	4,373,435
	4,373,509
	4,373,522
	4,373,529
	4,373,564
	4,373,623
	4,373,738
	4,373,772
	4,373,840
	4,373,847
	4,373,908
	4,373,909
	4,373,922
	4,374,029
56 :	4,373,808

DESIGN PATENTS

01 :	267,910
06 :	267,911
	267,918
	267,919
	267,924
	267,928
	267,935
	267,951
	267,952
	267,978
	267,985
09 :	267,960
12 :	267,977
17 :	267,914
	267,926
	267,933
	267,970
	267,974
	267,975
	267,982
19 :	267,972
24 :	267,976
25 :	267,950
	267,964
26 :	267,920
	267,921
	267,944
	267,968
27 :	267,943
	267,953
	267,963
33 :	267,942
34 :	267,908
	267,927
	267,947
	267,973
36 :	267,913
	267,966
	267,980
37 :	267,915
	267,916
	267,932
	267,981
39 :	267,925
42 :	267,957
44 :	267,936
	267,971
48 :	267,956
49 :	267,917
	267,941
55 :	267,930
	267,937

PLANT PATENTS

18 :	4,983

U.S. GOVERNMENT PRINTING OFFICE : O—1983

CHANGE OF ADDRESS FORM

NAME—FIRST, LAST

COMPANY NAME OR ADDITIONAL ADDRESS LINE

STREET ADDRESS

CITY | STATE | ZIP CODE

PLEASE PRINT OR TYPE (or) COUNTRY

Mail this form to: NEW ADDRESS

Superintendent of Documents
Government Printing Office SSOM
Washington, D.C. 20402

Attach last subscription label here.

SUBSCRIPTION ORDER FORM

SUBSCRIPTION ORDER FORM

ENTER MY SUBSCRIPTION TO:

@ $ Domestic; @ $ Foreign.

NAME—FIRST, LAST

COMPANY NAME OR ADDITIONAL ADDRESS LINE

STREET ADDRESS

CITY | STATE | ZIP CODE

PLEASE PRINT OR TYPE (or) COUNTRY

☐ Remittance Enclosed (Make checks payable to Superintendent of Documents)

☐ Charge to my Deposit Account No. ....

MAIL ORDER FORM TO:
Superintendent of Documents
Government Printing Office
Washington, D.C. 20402

Vol. 1027 Number 4

OFFICIAL GAZETTE

of the

UNITED STATES PATENT AND TRADEMARK OFFICE

PATENTS

February 22, 1983

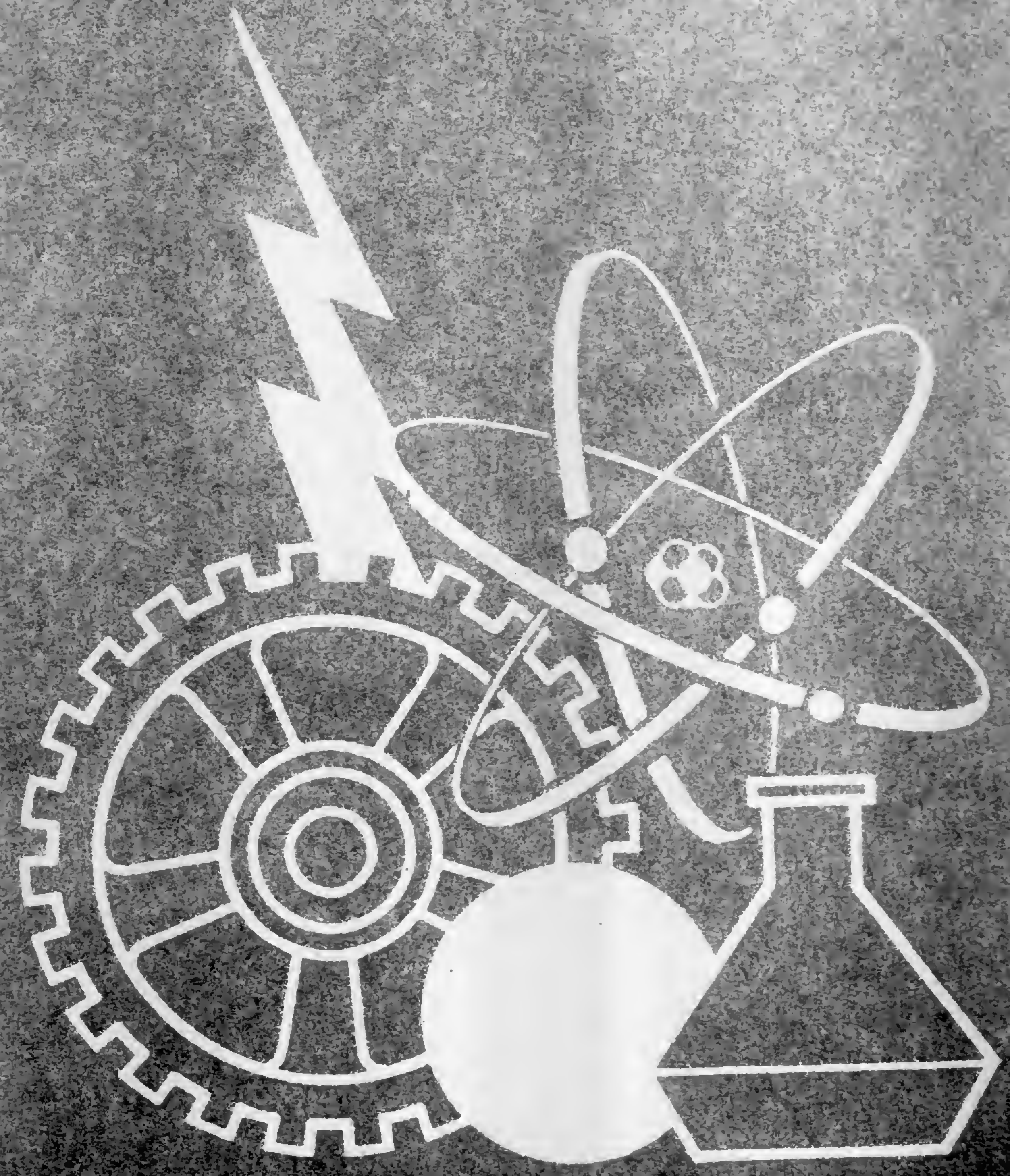

PUBLISHED WEEKLY BY AUTHORITY OF CONGRESS

U.S.
DEPARTMENT
OF COMMERCE

Patent
and
Trademark
Office

U.S. DEPARTMENT OF COMMERCE
[illegible], Secretary
PATENT AND TRADEMARK OFFICE
[illegible], Commissioner

OFFICIAL GAZETTE of the UNITED STATES PATENT AND TRADEMARK OFFICE

February 22, 1983 Volume 1027 Number 4

CONTENTS

The following are mailed under direction of the Superintendent of Documents, Government Printing Office, Washington, D.C., 20402, to whom all subscriptions should be made payable and all communications addressed:

THE OFFICIAL GAZETTE (PATENT SECTION), issued weekly.

THE OFFICIAL GAZETTE (TRADEMARK SECTION), issued weekly.

GENERAL INFORMATION concerning PATENTS.

GENERAL INFORMATION concerning TRADEMARKS.

PRINTED COPIES OF PATENTS are furnished by the Patent and Trademark Office at $1.00 each; PLANT PATENTS in color, $8.00 each; copies of TRADEMARKS at $1.00 each. Address orders to the Commissioner of Patents and Trademarks, Washington, D.C., 20231.

Printing authorized by Section 11(a)3 of Title 35, U.S. Code P.T.O.

PATENT AND TRADEMARK OFFICE NOTICES

Patent Cooperation Treaty Information

For information concerning the PCT member countries see the notice appearing in the Official Gazette at 1017 O.G. 10 on Apr. 13, 1982. For use of the European Patent Office as a Searching Authority for PCT applications filed in the United States, see the notice in the Official Gazette of Sept. 28, 1982 at 1022 O.G. 52.

Note that the domestic PCT fees have been increased as of Oct. 1, 1982 by a rule change to 37 CFR 1.445 that was published at 1021 O.G. 11 on Aug. 10, 1982. Also note that the international PCT fees have changed as of Jan. 1, 1983 and the Search Fee for the European Patent Office as Searching Authority changed as of Jan. 22, 1983. The notice regarding the change in international fees and the Search Fee for the European Patent Office appeared at 1025 O.G. 27, on 28 Dec. 1982. The current schedule of fees is as follows:

Transmittal fee	$ 125.00
Search fee	
U.S. Patent and Trademark Office as Searching Authority	
• No corresponding prior U.S. national application filed	500.00
• Corresponding prior U.S. national application filed	250.00
European Patent Office as Searching Authority	
• All cases	670.00
International Fees	
Basic Fees (first 30 pages)	265.00
Basic Supplemental Fee (for each page over 30)	5.00
Designation fee (for each national or regional office)	65.00

GERALD J. MOSSINGHOFF,
Commissioner of Patents and Trademarks.

Dec. 3, 1982.

REISSUE APPLICATIONS FILED

Notice under 37 CFR 1.11(b). The reissue applications listed below are open to inspection by the general public in the indicated Examining Groups and copies may be obtained by paying the fee therefor (37 CFR 1.21(b)).

4,256,870, Re. S.N. 445,916, Filed Dec. 1, 1982, Cl. 528/15, SOLVENTLESS RELEASE COMPOSITIONS, METHODS AND ARTICLES OF MANUFACTURE, Richard P. Eckberg, Owner of Record: *General Electric Co., New York, N.Y.*, Attorney or Agent: Edward A. Hedman, et al., Ex. Gp.: 142

4,291,129, Re. S.N. 443,877, Filed Nov. 23, 1982, Cl. 521/103, COMPOSITION AND A METHOD FOR CONTROLLING REACTION PRESSURES DURING THE FOAMING PROCESS RESULTING IN AN EASILY FLAME RETARDED FOAM-IN PLACE INSULATION, Richard B. Kennedy, Owner of Record: *James C. Patrick and Richard J. Fricke, Ridgefield, Conn.*, Attorney or Agent: Anne M. Kornbau, et al., Ex. Gp.: 143

4,316,914, Re. S.N. 445,223, Filed Nov. 29, 1982, Cl. 424/305, ELECTROSTATICALLY SPRAYABLE INSECTICIDAL FORMULATIONS, Ronald A. Coffee, et al., Owner of Record: *Imperial Chemical Industries PLC, London, England*, Attorney or Agent: John W. Malley, et al., Ex. Gp.: 125

4,335,536, Re. S.N. 430,021, Filed Sept. 30, 1982, Cl. 046/74D, INFLATABLE THROWING TOY, Sidney H. Magid, et al., Owner of Record: *Inventor*, Attorney or Agent: J. Harold Nissen, et al., Ex. Gp.: 333

REQUESTS FOR REEXAMINATION FILED

Notice under 37 CFR 1.11(c). The requests for reexamination listed below are open to inspection by the general public in the indicated Examining Groups. Copies of the requests and related papers may be obtained by paying the fee therefor established in the Rules (37 CFR 1.21(b)).

In the event correspondence to the patent owner is not received, this notice will be considered to be constructive notice to the patent owner and reexamination will proceed (37 CFR 1.248(a)(5) and 1.525(b)).

4,198,080, Reexam. No. 90/000,320, Requested: Jan. 21, 1983, Cl. 285/277, TELESCOPING-TYPE CONNECTOR, Walter L. Carpenter, Owner of Record: *Baxter Travenol Laboratories, Inc., Deerfield, Ill.*, Attorney or Agent: Thomas R. Schuman, Ex. Gp.: 351, Requester: Organan Teknika B.V., The Netherlands

4,360,288, Reexam. No. 90/000,318, Requested: Jan. 20, 1983, Cl. 403/268, FIBERGLASS SUCKER ROD CONSTRUCTION, Woodrow T. Rutledge, Jr., et al., Owner of Record: *Fiberflex Products, Inc., Big Spring, Tex.*, Attorney or Agent: Hyer, Matthews & Reiter, Ex. Gp.: 351, Requester: Shakespeare Co., Columbia, S.C.

Patent Suits

Notices under 35 U.S.C. 290; Patent Act of 1952

3,132,329, John L. Penter, TIME DIVISION TELEMETERING APPARATUS, **filed** Oct. 25, 1982, D.C., C.D. Calif. (Los Angeles), Doc. 82 5499, *John L. Penter* v. *Exxon Union Bank, et al.*

3,202,539, The Brown-Bridge Mills, Inc., NON-CURLING GUMMED PAPER, **filed** July 27, 1982, D.C. Mass. (Boston), Doc. 82-1598, *The Brown-Bridge Mills, Inc.* v. *Eastern Fine Paper, Inc.* **Same, filed** Aug. 16, 1982, U.S. Court of Appeals (1st Circuit, Boston), Doc. 82-1642, *The Brown-Bridge Mills, Inc., et al* v. *Eastern Fine Paper, Inc.*

3,270,580, Dana Corp., GEAR SHIFT LOCKING DEVICE, **filed** Oct. 18, 1982, D.C., N.D. Ill. (Chicago), Doc. 82 C 6368, *Dana Corp.* v. *Muncie Power Products, Inc.*

3,319,346, John E. Schuster, METHOD AND APPARATUS FOR HEAT TREATING MOISTURE BEARING PARTICLES, **filed** Oct. 14, 1982, D.C. Minn. (Duluth), Doc. 5-82-326, *John E. Schuster* v. *Erie Mining Co.* Case dismissed on Dec. 20, 1982.

3,367,320, Jenn-Air Corp., SELF-VENTILATING COOKING RANGE, **filed** Mar. 13, 1980, D.C. Del. (Wilmington), Doc. 80-122, *Jenn-Air Corp.* v. *Modern Maid Co.* Plaintiff is the owner of Pat. No. 3,367,320 which is valid. Complaint and counterclaims dismissed with prejudice with each party bearing its own costs. Filed Oct. 21, 1982.

3,402,651, Cass A. Pieronek, AUTOMATIC FILM PROGRAMMER, **filed** Oct. 6, 1982, D.C. Ariz. (Phoenix), Doc. 82-1647 PHX, *Cass A. Pieronek* v. *Durst North America, Inc., et al.*

3,415,857, Albright & Wilson Ltd., PRODUCTION OF ORGANOTIN HALIDES, **filed** Sept. 27, 1982,

D.C., S.D. Ohio (Cincinnati), Doc. C-1-82-1008, *Albright & Wilson Ltd.* v. *Carstab Corp.* **Same, filed** Sept. 27, 1982, D.C. Del. (Wilmington), Doc. 82-647, *Albright & Wilson Ltd.* v. *Argus Chemical Corp.*

3,459,199, Jerry F. Connell, TEASING AND UNSNARLING IMPLEMENT, **filed** Apr. 2, 1981, D.C., N.D. Ala. (Birmingham), Doc. 81-C-0496-M, *Jerry F. Connell, et al* v. *Sears-Roebuck and Co.* Case closed Dec. 2, 1982.

3,465,441, Leonard I. Linkow, RING-TYPE IMPLANT FOR ARTIFICIAL TEETH; **3,729,825,** Oratronics, Inc., ORAL IMPLANT; **3,849,888,** Oratronics, Inc., BONE ADAPTING TISSUE PACKING POST SYSTEM, **filed** Aug. 13, 1982, D.C., S.D.N.Y., Doc. 82-Civ-5377 (CSH), *Oratronics, Inc.* v. *Leonard I. Linkow.*

3,471,017, Peter Gabor Kalman, FILTERING PROCESS AND APPARATUS, **filed** Oct. 7, 1982, D.C. Mass. (Springfield), Doc. 82-0346-F, *Peter Gabor Kalman* v. *The Berlyn Corp.*

3,480,410, Fansteel, Inc., WC-CrC-Co SINTERED COMPOSITE, **filed** Jan. 10, 1972, D.C., N.D. Ill. (Chicago), Doc. 72 C 72, *Fansteel, Inc.* v. *Carmet Co., et al.* All matters having been settled by the parties, this cause is dismissed with prejudice on Aug. 4, 1982.

3,493,496, Desalination Systems, Inc., PURIFIED WATER SUPPLY APPARATUS AND METHOD, **filed** Sept. 13, 1982, D.C., N.D. Ill. (Chicago), Doc. 82 C 5630, *Desalination Systems, Inc.* v. *Culligan International Co.* **Same, filed** Oct. 1, 1982, D.C., N.D. Ill. (Chicago), Doc. 82 C 6060, *Desalination Systems, Inc.* v. *Rainsoft Water Conditioning Co.*

3,506,070, Marathon Oil Co., USE OF WATER-EXTERNAL MICELLAR DISPERSIONS IN OIL RECOVERY; **3,506,071, same, filed** Feb. 26, 1982, D.C., C.D. Ill. (Peoria), Doc. 82-1043, *Marathon Oil Co.* v. *Tri Star Producing Co., Inc., et al.* Case closed per notice of dismissals on May 26, 1982.

3,506,071. (See 3,506,070.)

3,514,765, Shell Oil Co., SENSE AMPLIFIER COMPRISING CROSS COUPLED MOSFETS OPERATING IN A RACE MODE FOR SINGLE DEVICE PER BIT MOSFET MEMORIES; **3,678,473, same,** READ-WRITE CIRCUIT FOR CAPACITIVE MEMORY ARRAYS, **filed** Nov. 30, 1982, D.C., S.D. Tex. (Houston), Doc. H-82-3609, *Shell Oil Co.* v. *National Semiconductor Corp., et al.*

3,531,323, Aerospace Tools, Inc., CLEANING APPARATUS AND METHOD, **filed** Sept. 30, 1982, U.S. Court of Claims (Wash. D.C.), Doc. 504-82 C, *Aerospace Tools, Inc.* v. *The United States.*

3,539,751, Melvin L. Levinson, INSULATING IMPLEMENT FOR USE IN A MICROWAVE OVEN; **3,777,099, same,** METHODS OF HEATING AN ARTICLE IN A MICROWAVE OVEN; **3,854,023, same;** MICROWAVE OVEN HEATING MEMBER; **3,985,991, same,** METHODS OF MICROWAVE HEATING IN METAL CONTAINERS, **filed** Dec. 7, 1981, D.C.N.J. (Newark), Doc. 81-3763, *Melvin L. Levinson* v. *Litton Systems, Inc.*

3,601,923, Bruce L. Rosenberg, AMUSEMENT DEVICE EMPLOYING DILATANT SUSPENSION FILLER, **filed** Jan. 2, 1982, D.C., S.D. Ohio (Cincinnati), Doc. C-1-82-0046, *Bruce L. Rosenberg,* v. *CPG Products Corp.* Stipulation and Order of dismissal filed Oct. 4, 1982.

3,609,300, John W. Halpern, AUTOMATIC FARE CHARGING DEVICE **filed** Nov. 24, 1981, D.C. District of Columbia (Wash. D.C.), Doc. 81-2853, *John W. Halpern* v. *Washington Metropolitan Area Transit Authority.* Order dismissing action with prejudice filed Oct. 7, 1982.

3,615,972, Morehouse and Tetreault, EXPANSIBLE THERMOPLASTIC POLYMER PARTICLES CONTAINING VOLATILE FLUID FOAMING AGENT AND METHOD OF FORMING THE SAME, **filed** Sept. 11, 1981, D.C.N.J. (Newark), Doc. 81-2870, *Pierce & Stevens Chemical Corp.* v. *Spectrachem Corp.* Consent judgment dismissing action filed July 23, 1982.

3,619,887, William M. McLaughlin, TOOL FOR FORCIBLY REMOVING A CYLINDER FROM A LOCK, **filed** Oct. 7, 1982, D.C., E.D. Pa. (Philadelphia), Doc. 82-4402, *William M. McLaughlin* v. *Ziamatic Corp.*

3,644,936, Boole & Babbage, Inc., METHOD FOR MEASURING PERFORMANCE OF A GENERAL PURPOSE DIGITAL COMPUTER, **filed** Sept. 13, 1982, D.C., C.D. Calif. (Los Angeles), Doc. 82 4758, *Candle Corp.* v. *Boole & Babbage, Inc.*

3,649,532, John O. McLean, METHOD OF TREATING WATER, **filed** Oct. 14, 1982, D.C., N.D. Ind. (Fort Wayne), Doc. F-82-417, *Chemical Engineering Corp. and John O. McLean* v. *Essef Industries, Inc., et al.*

3,659,284, Sanders Associates, Inc., TELEVISION GAMING APPARATUS; **Re. 28,507, same, filed** Sept. 28, 1982, D.C., N.D. Calif. (San Francisco), Doc. 82-5270 TEH, *Magnavox Co. and Sanders Associates, Inc.* v. *Activision, Inc.*

3,659,915, Corning Glass Works, FUSED SILICA OPTICAL WAVEGUIDE; **3,711,262, same,** METHOD OF PRODUCING OPTICAL WAVEGUIDE FIBERS; **3,823,995, same,** METHOD OF FORMING LIGHT FOCUSING FIBER WAVEGUIDE; **3,884,550, same,** GERMANIA CONTAINING OPTICAL WAVEGUIDE, **filed** July 23, 1982, D.C. Mass. (Springfield), Doc. 82-0260-F, *Corning Glass Works* v. *Valtec Corp.*

3,666,284, Deere & Co., HYDRAULIC DEPTH CONTROL FOR DRAWN IMPLEMENT CARRIERS HAVING PIVOTED OUTER FRAMES; **3,700,039, same,** SPRING TRIP SHANK ASSEMBLY, **filed** July 15, 1979, D.C., S.D. Iowa (Des Moines), Doc. 79-2167, *Deere & Co.* v. *Hesston Corp.* Final judgment entered Nov. 30, 1982.

3,678,473. (See 3,514,765.)

3,688,985, Walter H. Engel, PLASTIC ARTICLE OF MANUFACTURE IMPREGNATED WITH VOLATILE MATTER, **filed** Nov. 1, 1982, D.C.N.J. (Newark), Doc. 82-3646, *Dr. Walter H. Engel* v. *Beecham Products, Inc.*

3,700,039. (See 3,666,284.)

3,701,872, Melvin L. Levinson, HEATING AND LOADING IMPLEMENT FOR MICROWAVE ENERGY; **3,731,037, same,** MICROWAVE KILN TO COOK FOOD; **3,777,099, same,** METHODS OF HEATING AN ARTICLE IN A MICROWAVE OVEN; **3,985,990, same,** MICROWAVE OVEN BAKING UTENSIL; **4,317,017, same,** MICROWAVE STEAMER, **filed** Dec. 6, 1982, D.C.N.J. (Newark), Doc. 82-4096-B, *Melvin L. Levinson* v. *Raytheon Co.*

3,711,262, Corning Glass Works, METHOD OF PRODUCING OPTICAL WAVEGUIDE FIBERS; **3,823,995, same,** METHOD OF FORMING LIGHT FOCUSING FIBER WAVEGUIDE; **3,884,550, same,** GERMANIA CONTAINING OPTICAL WAVEGUIDE, **filed** July 14, 1976, D.C., W.D. Va. (Roanoke), Doc. 76-0144, *Corning Glass Works* v. *International Telephone and Telegraph Corp.* Consent judgment entered July 27, 1981.

3,711,262. (See 3,659,915.)

3,729,825. (See 3,465,441.)

3,731,037. (See 3,701,872.)

3,738,612, American Seating Co., ADVANCING AND RETRACTING MECHANISM, **filed** Aug. 2, 1982, D.C., W.D. Mich. (Grand Rapids), Doc. G82-505 CA1, *American Seating Co.* v. *Interkal, Inc.* Plaintiff is the owner of Pat. No. 3,738,612 which is valid and enforceable. Defendant shall not infringe plaintiff's patent. Filed Oct. 7, 1982.

3,745,026. Swift & Co., CARCASS CHILLING PROCESS, **filed** June 7, 1978, D.C., W.D. Okla. (Oklahoma City), Doc. 78-0578-D, *Swift & Co.* v. *Wilson Foods Corp.* Consent judgment entered Aug. 3, 1982.

3,758,682, Diagnostic Data, Inc., PHARMACEUTICAL COMPOSITIONS COMPRISING ORGOTEIN AND THEIR USE; **3,773,929, same, filed** May 13, 1980, D.C., N.D. Calif. (San Francisco), Doc. C80-1866 WHO, *Palolab Pharmaceuticals Corp., et al* v. *Diagnostic Data, Inc.* Stipulation and Order for dismissal with prejudice filed Mar. 2, 1982.

3,773,929. (See 3,758,682.)

3,777,099. (See 3,539,751 and 3,701,872.)

3,777,778, George J. Janu, TWO-POSITION LIQUID LEVEL CONTROLLER, **filed** July 21, 1982, D.C., N.D. Ill. (Rockford), Doc. 82 C 20121, *Burton Mechanical Contractors, Inc.* v. *Envirovac, Inc.*

3,782,708, Kuhlman Corp., SPRING ASSEMBLY AND METHODS AND MACHINES FOR THE MANUFACTURE THEREOF, **filed** Sept. 16, 1982, D.C., E.D. Mich. (Detroit), Doc. 82-73476, *Kuhlman Corp.* v. *P.J. Wallbank Springs, Inc.*

3,784,047, Alfred Cooper, SAFETY CLOSURE CAP, **filed** Aug. 26, 1982, D.C., N.D. Calif. (San Francisco), Doc. 82-4571, *Alfred Cooper* v. *Ford Motor Co., et al.*

3,817,860, Lambert and Fina, METHOD OF DISINFECTING WATER AND DEMAND BACTERICIDE FOR USE THEREIN; **3,923,665, same**, DEMAND BACTERICIDE FOR DISINFECTING WATER AND PROCESS OF PREPARATION; **4,187,183**, Gary L. Hatch, MIXED-FORM POLYHALIDE RESINS FOR DISINFECTING WATER; **4,190,529**, Gary L. Hatch, MIXED-FORM POLYHALIDE RESINS FOR DISINFECTING WATER, **filed** July 13, 1982, D.C., N.D. Ill. (Chicago), Doc. 82 C 4330, *Water Technologies Corp., et al* v. *Calco, Inc., et al.*

3,822,506, Door Controls, Inc., DOOR COORDINATING DEVICE, **filed** Nov. 12, 1982, D.C., E.D. Mich. (Ann Arbor), Doc. 82-60378, *Door Controls, Inc.* v. *Leigh Products, Inc.*

3,823,995. (See 3,659,915 and 3,711,262.)

3,827,490, Camco, Inc., APPARATUS FOR INSTALLING AND REMOVING FLOW VALVES, **filed** Sept. 16, 1977, D.C., N.D. Tex. (Dallas), Doc. CA3-77-1262-C, *Camco, Inc., et al* v. *Teledyne Industries, Inc., doing business as Teledyne Merla.* Final Judgment filed Oct. 29, 1982.

3,849,888. (See 3,465,441.)

3,851,972, Coulter Electronics, Inc., AUTOMATIC METHOD AND SYSTEM FOR ANALYSIS AND REVIEW OF A PLURALITY OF STORED SLIDES, **filed** Nov. 19, 1982, D.C., E.D. Pa. (Philadelphia), Doc. 82-5163, *Coulter Electronics, Inc.* v. *SmithKline Corp.*

3,854,023. (See 3,539,751.)

3,884,550. (See 3,659,915 and 3,711,262.)

3,900,250, Rynco Scientific Corp., SEMI-RIGID, GAS PERMEABLE CONTACT LENSES, **filed** Oct. 27, 1982, D.C., C.D. Calif. (Los Angeles), Doc. 82-5548, *Rynco Scientific Corp.* v. *Security Contact Lens Corp., et al.*

3,903,878, Donald C. Spann, DEVICE FOR SUPPORTING A LIMB AND ASSOCIATED EXTREMITY; **3,938,205, same**, BODY POSITIONER; **3,939,829, same**, RESTRAINING CUFF; **3,946,451, same**, LIMB SUPPORT; **4,108,170, same**, PATIENT SUPPORT STRAP; **4,135,504, same**, ORTHOPEDIC SUPPORT, **same, filed** May 2, 1980, D.C., M.D. Fla. (Jacksonville), Doc. 80-397-Civ-J-M, *Span-America, Inc. and Donald C. Spann* v. *National Medical Products, Inc., doing business as Posi-Block.*

3,907,332, Donald G. Richardson, SUSPENSION SYSTEM, **filed** July 30, 1982, D.C., C.D. Calif. (Los Angeles), Doc. 82-3826, *Donald G. Richardson* v. *Kawasaki, et al.*

3,911,868, Chore-Time Equipment, Inc., POULTRY FEEDER, **filed** May 23, 1980, D.C., E.D. Tenn. (Chattanooga), Doc. 1-80-137, *Chore-Time Equipment, Inc.* v. *Cumberland Corp.* Patent No. 3,911,868 issued to Howard S. Brembeck and assigned to plaintiff is adjudged invalid and this lawsuit dismissed, the issue of infringement having been rendered moot, per judgment of dismissal filed Sept. 14, 1982.

3,923,665. (See 3,817,860.)

3,938,205. (See 3,903,878.)

3,939,762, Big Elk Wood Corp., APPARATUS FOR BUNDLING FIREWOOD; **4,072,094, same**, METHOD FOR BUNDLING FIREWOOD, **filed** Aug. 5, 1980, D.C. Colo. (Denver), Doc. 80-A-1030, *Big Elk Wood Corp.* v. *Carlson Stapler & Shippers Supply, Inc.* Complaint, amended complaint and counterclaims dismissed with prejudice per order filed Apr. 12, 1982.

3,939,829. (See 3,903,878.)

3,946,451. (See 3,903,878.)

3,948,680, Gould, Inc., LEAD-ACID STORAGE BATTERY CAPABLE OF ACTIVATION BY THE ADDITION OF ELECTROLYTE; **3,988,165, same**, METHOD OF MAKING A LEAD-ACID STORAGE BATTERY, AND CELL, CAPABLE OF ACTIVATION BY THE ADDITION OF ELECTROLYTE, **filed** Mar. 1, 1977, D.C. Del. (Wilmington), Doc. 77-73, *Gould, Inc.* v. *Northwest Industries, Inc., et al.* Patent Nos. 3,948,680 and 3,988,165 are valid and were willfully infringed by defendant, per order dated July 19, 1982.

3,948,680, Gould, Inc., LEAD-ACID STORAGE BATTERY CAPABLE OF ACTIVATION BY THE ADDITION OF ELECTROLYTE, **filed** May 6, 1976, D.C. Del. (Wilmington), Doc. 76-162, *General Battery* v. *Gould, Inc.* Patent Nos. 3,948,680 and 3,988,165 are valid and were willfully infringed by defendant, per order dated July 19, 1982.

3,952,383, Chivas Products Ltd., STRAP FITTING FOR AUTOMOBILE INTERIOR AND OTHER USES; **3,977,054, same, filed** Nov. 12, 1982, D.C., E.D. Mich. (Detroit), Doc. 82-74274, *Chivas Products Ltd.* v. *Voplex Corp.*

3,953,566, W. L. Gore & Associates, Inc., PROCESS FOR PRODUCING POROUS PRODUCTS, **filed** Nov. 2, 1979, D.C., N.D. Ohio (Cleveland), Doc. 79-2074, *W. L. Gore & Associates, Inc.* v. *Garlock, Inc.* Memorandum of Opinion that court holds Pat. No. 3,953,566 invalid under 35 U.S.C. §102,103 and 112, and judgment is entered for defendant. Filed Nov. 19, 1982.

3,954,163, Xerox Corp., HIGH SPEED PRINTER WITH INTERMITTENT PRINT WHEEL AND CARRIAGE MOVEMENT, **filed** Aug. 5, 1982, D.C., N.D. Ill. (Chicago), Doc. 82 C 4824, *Xerox Corp.* v. *Olivetti Corp.*

3,968,256, Edmond L. Sing, PREPARATION OF COTTAGE CHEESE; **4,318,928, same**, PREPARATION OF COTTAGE CHEESE CONTAINING STREPTOCOCCUS DIACETILACTIS; **4,351,904, same**, BLEND OF NORMAL AND MUTANT STREPTOCOCCUS DIACETILACTIS, **filed** Nov. 9, 1982, D.C., M.D. Fla. (Tampa), Doc. 82-1239 CIV T BK, *Edmond L. Sing* v. *Microlife Technics, Inc.*

3,977,054. (See 3,952,383.)

3,981,984, Colorcon, Inc., COLOR FILM COATING OF TABLETS AND THE LIKE, **filed** Aug. 25, 1982, D.C., C.D. Pa. (Philadelphia), Doc. 82-3716, *Colorcon, Inc.* v. *Crompton & Knowles Corp.*

3,983,482, Bell Telephone Laboratories, Inc., DELAYED PULSE TRANSMISSION SYSTEMS, **filed** Sept. 27, 1982, U.S. Court of Claims (Wash. D.C.), Doc. 487-82 C, *Western Electric Co., Inc., et al* v. *The United States of America.*

3,985,990. (See 3,701,872.)

3,985,991. (See 3,539,751.)

3,988,165. (See 3,948,680.)

3,990,767, Thomas & Betts Corp., ELECTRICAL CONTACT AND CONNECTOR MEANS EMPLOYING SAME, **filed** Dec. 27, 1978, D.C. Del. (Wilmington), Doc. 78-552, *Thomas & Betts Corp.* v. *Winchester Electronics Division of Litton Systems, Inc.* Pat. No. 3,990,767 is valid and infringed by defendant's manufacture and sale of its "double strut" electrical connector construction but not infringed by its "single strut" connector construction. Filed Oct. 8, 1982.

3,993,520, Frank D. Werner, WINDSHIELD REPAIR APPARATUS AND METHOD, **filed** June 7, 1982, D.C. Minn. (Minneapolis), Doc. 4-82 Civil 802, *Novus, Inc. and Frank D. Werner* v. *International Glass Repair of St. Paul, Ltd., et al.* Pat. No. 3,993,520 was valid and legally issued. Defendants are permanently enjoined from further infringing plaintiff's patent. Filed Dec. 9, 1982. **Same, filed** Dec. 3, 1981, D.C. Minn. (Minneapolis), Doc. 4-81 Civ. 835, *Novus, Inc. and Frank D. Werner* v. *Hare D. Stuart, et al.* Pat. No. 3,993,520 was valid and legally issued. Defendants are permanently enjoined from further infringing plaintiff's patent. Filed Dec. 9, 1982.

4,007,761, Union Carbide Corp., PREPACKAGED SHIRRED TUBULAR CASING ARTICLE, **filed** Apr. 4, 1980, D.C., C.D. Ill. (Danville), Doc. 80-2073, *Union Carbide Corp.* v. *Teepak, Inc.* Consent Order filed Sept. 3, 1982.

4,013,134, The Richmond Mfg. Co., PORTABLE EARTH BORING MACHINE WITH STEERING HEAD, **filed** Mar. 20, 1979, D.C., N.D. Ohio (Cleveland), Doc. C79-509, *The Richmond Mfg. Co.* v. *Allied Steel & Tractor Products Co., Inc.* Plaintiff is the owner of Pat. No. 4,013,134 which is valid. Defendant is permanently enjoined from further infringing plaintiff's patent. Filed Sept. 14, 1982.

4,014,648, Microfibres, Inc., IN-LINE FLOCK CUTTING PROCESS, **filed** Dec. 6, 1982, D.C., S.D.N.Y., Doc. 82-Civ-8099 (WK), *Microfibres, Inc.* v. *M. Lowenstein Corp.*

4,015,299, Robert Tinnel, WATER BED, **filed** Apr. 21, 1980, D.C., N.D. Calif. (San Francisco), Doc. C80 1544 WAI, *Ultimate Water Bed Co. and Robert Tinnel* v. *J. C. Penney Co., Inc.* Plaintiff to take nothing, action dismissed on merits, and defendants to recover from plaintiff its costs of action. Filed Sept. 10, 1982.

4,020,854, Lorenzo Caruso, DEVICE AND METHOD FOR PROGRAMMED HAIR COLORING, **filed** Sept. 3, 1982, D.C., N.D. Calif. (San Francisco), Doc. C-82-4725-SW, *Lorenzo Caruso* v. *Clairol, Inc.*

4,024,734, Trip-Lite Ltd., YARN FAULT DETECTORS; **D. 246,292, same**, YARN FAULT DETECTOR, **filed** Aug. 9, 1982, D.C., N.D.N.Y. (Utica), Doc. 82-Civ-825, *Trip-Lite Ltd.* v. *Kencap Products, Inc.*

4,044,444, Richard T. Harris, TUBE TRAVELER, **filed** Oct. 18, 1982, D.C., E.D. Va. (Norfolk), Doc. 82-774-N, *Richard T. Harris* v. *Atlantic Nuclear Services, Inc.*

4,048,672, T-Bar, Inc., SWITCH MATRIX CONTROL AND DISPLAY, **filed** July 31, 1981, D.C. Conn. (Bridgeport), Doc. B-81-347, *T-Bar, Inc.* v. *Data Switch Corp., et al.*

4,051,683, Jennmar Corp., METHOD AND APPARATUS FOR SUPPORTING A MINE ROOF; **Reg. No. 1,165,222** (COMBINATION), Jennmar Corp., **filed** Oct. 26, 1982, D.C., W.D. Pa. (Pittsburgh), Doc. 82-2254, *Jennmar Corp.* v. *Republic Corp.*

4,051,683, Jennmar Corp., METHOD AND APPARATUS FOR SUPPORTING A MINE ROOF, **filed** Nov. 16, 1982, D.C., S.D. Ohio (Columbus), Doc. C-2-82-1460, *Jennmar Corp.* v. *Pattin Mfg. Co.*

4,057,251, Arachnid, Inc., DART GAME WITH APERTURED TARGET PLATES RESILIENTLY MOUNTED, **filed** Sept. 28, 1982, D.C., N.D. Ill. (Chicago), Doc. 82 C 5970, *Arachnid, Inc.* v. *Industrial Design Engineering Associates, Ltd., et al.*

4,063,059, W. A. Whitney Corp., PUNCH PRESS WITH CUTTING TORCH; **4,338,507, same**, WATER-QUENCHED COLLECTION SYSTEM FOR USE WITH A PLASMA-ARC TORCH, **filed** Oct. 21, 1982, D.C., N.D. Ill. (Chicago), Doc. 82 C 6431, *W. A. Whitney Corp.* v. *Trumpf America, Inc., et al.*

4,072,094. (See 3,939,762.)

4,078,265, Teresa Helena Condit, REVERSIBLE ATHLETIC JERSEY; **4,296,498**, Joseph J. Vinson, REVERSIBLE GARMENT, **filed** Aug. 27, 1982, D.C., S.D. Ohio (Cincinnati), Doc. C-1-82-846, *Teresa H. Condit* v. *Joseph J. Vinson.*

4,079,584, American Hoist & Derrick Co., HEAVY DUTY SHACKLE, **filed** Aug. 27, 1979, D.C. Ore. (Portland), Doc. 79-983 PA, *American Hoist & Derrick Co.* v. *Sowa & Sons, Inc.* Case closed on Oct. 19, 1982.

4,087,124, Rudkin-Wiley Corp., ILLUMINATED DRAG REDUCING SYSTEM, **filed** Oct. 8, 1982, D.C., N.D. Ohio (Cleveland), Doc. 82-2719Y, *Rudkin-Wiley Corp.* v. *Premix, Inc.*

4,102,377, Nels M. Ostrem, STEERING WHEEL COVER DEVICE, **filed** Sept. 17, 1982, D.C., C.D. Calif. (Los Angeles), Doc. 82 4852, *Nels M. Ostrem* v. *What's New, Inc., et al.*

4,107,046, Teledyne Industries, Inc., WATER PURIFIER, **filed** Dec. 9, 1982, D.C., N.D. Ill. (Chicago), Doc. 82C7525, *Teledyne Industries, Inc.* v. *Associated Mills, Inc.*

4,108,170. (See 3,903,878.)

4,108,415, Guyray Industries, Inc., ROCKER SUSPENSION SYSTEM, **filed** Mar. 3, 1982, D.C. Mass. (Springfield), Doc. 82-0091-F, *Dutailier, Inc.* v. *Guyray Industries, Inc.* Voluntary dismissal by plaintiff filed Sept. 10, 1982.

4,120,524, D G Shelter Products Co., DEVICE FOR OPENING, CLOSING AND LATCHING A VENT CLOSURE MEMBER; **Re. 30,969, same, filed** Oct. 6, 1982, D.C., C.D. Calif. (Los Angeles), Doc. 82 5209, *D G Shelter Products Co.* v. *West Custom Windows, Inc., et al.* **Same, filed** Nov. 17, 1982, D.C., C.D. Calif. (Los Angeles), Doc. 82 5951, *D G Shelter Products Co.* v. *Reflectolite Products, Inc., et al.*

4,123,506, Deuterium Corp., IMPROVEMENTS IN UTILIZATION OF IMPURE STEAM CONTAMINATED WITH HYDROGEN SULFIDE; **4,202,864, same**, PROCESS FOR CONTROLLING ENVIRONMENTAL POLLUTION FROM STEAM CONTAINING HYDROGEN SULFIDE; **4,242,305, same**, APPARATUS FOR CONTROLLING EMISSIONS OF

HYDROGEN SULFIDE FROM A SYSTEM UTILIZING GEOTHERMAL STEAM, **filed** July 8, 1981, D.C., S.D.N.Y., Doc. 81-Civ-4232, *EIC Laboratories, Inc.* v. *Deuterium Corp.* Notice of dismissal filed Mar. 9, 1982. **Same, filed** Aug. 26, 1982, U.S. Court of Claims (Wash. D.C.), Doc. 425-82 C, *Deuterium Corp.* v. *The United States of America.*

4,130,920, Siarto Machine & Tool Co., Inc., MACHINE TOOL; **4,200,182, same,** METHOD OF MACHINING; **4,209,088, same,** MACHINE TOOL, **filed** Feb. 24, 1981, D.C., E.D. Mich. (Detroit), Doc. 81-70586, *Ringtransfer, Inc.* v. *Siarto Machine & Tool Co., Inc., et al.* Order of dismissal of complaint, counterclaims and third party complaint filed July 29, 1982.

4,132,029, Positive Pyramids, Inc., PYRAMID FLYER, **filed** Oct. 13, 1982, D.C. Colo. (Denver), Doc. 82-C-1709, *Pyramid Creations, Inc.* v. *Positive Pyramids, Inc.*

4,135,504. (See 3,903,878.)

4,136,359, Apple Computer, Inc., MICROCOMPUTER FOR USE WITH VIDEO DISPLAY; **4,278,972, same,** DIGITALLY-CONTROLLED COLOR SIGNAL GENERATION MEANS FOR USE WITH DISPLAY, **filed** Sept. 27, 1982, D.C., C.D. Calif. (Los Angeles), Doc. 82 5015, *Apple Computer, Inc.* v. *Formula International, Inc.*

4,139,166, Menzel, Inc., SURFACE WIND BATCHER, **filed** Oct. 12, 1982, D.C.S.C. (Columbia), Doc. 82-2575-3, *Menzel, Inc.* v. *Bond Textile Machinery, Inc., et al.*

4,139,763, James P. McMullan, BLANKET HEATER WITH TEMPERATURE CONTROL MEANS, **filed** May 12, 1981, D.C., N.D. Calif. (San Francisco), Doc. 81 1871 WTS, *James P. McMullan* v. *Thermal Technology.* Stipulation and Order to dismiss with prejudice filed Oct. 14, 1982.

4,144,461, Victoreen, Inc., METHOD AND APPARATUS FOR ASSAY AND STORAGE OF RADIOACTIVE SOLUTIONS, **filed** Nov. 29, 1982, D.C.N.J. (Newark), Doc. 82-3999, *Victoreen, Inc.* v. *Capintec, Inc.*

4,152,974, National Presto Industries, Inc., HOT AIR CORN POPPER, **filed** Oct. 6, 1981, D.C.N.J. (Newark), Doc. 81-3120, *National Presto Industries, Inc.* v. *Forda Mfg., Co., Ltd.* Order of dismissal of action filed Oct. 5, 1982.

4,154,473, American Sunroof Corp., VEHICLE ROOF STRUCTURE KIT, **filed** Aug. 8, 1979, D.C., E.D. Mich. (Detroit), Doc. 79-73213, *American Sunroof Corp.* v. *Cars & Concepts, Inc.* Plaintiff is the owner of Pat. No. 4,154,473 which is valid. Stipulation and Order dismissing claims and counterclaims with prejudice, and without costs, as to both parties filed July 8, 1980. **Same, filed** Oct. 13, 1982, D.C. Md. (Baltimore), Doc. HM-82-3028, *American Sunroof Corp.* v. *E & G Classics, Inc.*

4,160,125, Digital Products Corp., TELEPHONE POLLING APPARATUS; **4,201,896, same,** TELEPHONE POLLING APPARATUS USING A PLURALITY OF TIMERS TO DETECT THE LINE CONDITIONS, **filed** Sept. 29, 1982, D.C. Md. (Baltimore), Doc. H-82-2866, *Digital Products Corp.* v. *Microlog Corp.*

4,172,560, Vermillion Equipment & Supply Co., Inc., REPLACEABLE LINER FOR THE DISCHARGE ASSEMBLY OF A ROTARY GRINDING MILL OR THE LIKE, **filed** Feb. 19, 1982, D.C. Minn. (Duluth), Doc. 5-82-32, *Northern Mining Equipment Co., et al* v. *Vermillion Equipment & Supply Co., Inc.* Pat. No. 4,172,560 is hereby declared to be invalid and unenforceable per default judgment filed Nov. 18, 1982.

4,176,921, Carrera International Corp., EYEGLASSES HAVING REMOVABLE LENSES; **Reg. No. 855,063** (CARRERA), Carrera International Corp., **filed** Dec. 30, 1981, D.C., S.D. Fla. (Miami), Doc. 81-2903-CIV-JLK, *Carrera International Corp.* v. *Optical Industries Corp., doing business as Boulevard Optics.* **Same, filed** June 7, 1982, D.C., E.D.N.Y. (Brooklyn), Doc. 82-Civ-1595, *Carrera International Corp.* v. *Roosevelt Field Opticians, et al.*

4,177,758, Dale Young, REARING APPARATUS FOR FISH FRY, **filed** Dec. 8, 1982, D.C. Alaska (Anchorage), Doc. A82-497 CIV, *Chemical Proof Corp., Inc. and Dale Young* v. *State of Alaska.*

4,179,081, John C. Parry, APPARATUS FOR APPLICATION OF PLASTICS STRETCH FILMS; **4,248,392, same, filed** Nov. 5, 1982, D.C., C.D. Calif. (Los Angeles), Doc. 82 5739, *John C. Parry* v. *Stevenson Industries, Inc.*

4,179,163, Superior Industries International, Inc., SIMULATED WIRE SPOKE WHEEL ASSEMBLY, **filed** Aug. 18, 1982, D.C, C.D. Calif. (Los Angeles), Doc. 82 4207, *Superior Industries International, Inc.* v. *Roy Y. Hamada, et al.*

4,181,347, Synergetics, Inc., MOBILE COMPUTERIZED TOMOGRAPHY UNIT, **filed** June 10, 1981, D.C., S.D. Fla. (Miami), Doc. 81-6315-CIV-SMA, *Synergetics, Inc.* v. *Universal Medical Scanners, Inc.* Consent Decree filed July 28, 1982.

4,186,982, AMP, Inc., CONTACT WITH SPLIT PORTION FOR ENGAGEMENT WITH SUBSTRATE, **filed** Nov. 15, 1982, D.C. Conn. (Bridgeport), Doc. B-82-669, *AMP, Inc.* v. *Burndy Corp.*

4,187,183. (See 3,817,860.)

4,187,390, W. L. Gore & Associates, Inc., POROUS PRODUCTS AND PROCESS THEREFOR, **filed** Feb. 7, 1980, D.C., N.D. Ohio (Cleveland), Doc. 80-174, *W. L. Gore & Associates, Inc.* v. *Garlock, Inc.* Memorandum of Opinion holding Pat. No. 4,187,390 invalid under 35 U.S.C. §§102, 103 and 112 and judgment is entered for defendant. Filed Nov. 19, 1982.

4,188,063, Etienne Dussart, HAMMOCK CHAIR WITH BACK SUPPORTING MEANS, **filed** May 8, 1980, D.C. Puerto Rico (San Juan), Doc. 80-0981, *Etienne Dussart* v. *Emeterio Hernandez, et al.* Judgment filed Sept. 8, 1982. **Same, filed** Sept. 29, 1980, D.C. Puerto Rico (San Juan), Doc. 80-2103, *Etienne Dussart* v. *Encarnacion Diaz.* Judgment filed Sept. 8, 1982.

4,188,876, Donald J. Graves, JUNK METAL COMPRESSOR, **filed** Oct. 1, 1980, D.C., N.D. Ind. (Fort Wayne), Doc. F 80-0190, *Donald J. Graves, et al* v. *The Kemsco Group, Inc., et al.* Order stating that defendant's salvage compactor does not infringe on Plaintiff's Pat. No. 4,188,876 filed Aug. 24, 1982. Cause dismissed with prejudice on motion by parties filed Sept. 17, 1982.

4,190,529. (See 3,817,860.)

4,193,284, Nathan O. McCrary, CAME CUTTING AND MOLDING TOOL AND METHOD OF USING SAME, **filed** Oct. 29, 1982, D.C., S.D. Iowa (Des Moines), Doc. 82-614-E, *Nathan O. McCrary* v. *C. T. Corp. Systems.*

4,195,732, Great Northern Corp. & Presto Products, Inc., SUPPORTING AND SPACING MEMBER FOR WEB MATERIAL ROLLS, **filed** July 29, 1982, D.C., N.D. Ga. (Atlanta), Doc. C82-1582A, *Great Northern Corp. & Presto Products, Inc.* v. *Davis Core & Pad Co., Inc.*

4,200,182. (See 4,130,920.)

4,201,896. (See 4,160,125.)

4,202,864. (See 4,123,506.)

4,208,831, Shelcore, Inc., DRIVING SIMULATOR TOY, **filed** Oct. 13, 1982, D.C.N.J. (Newark), Doc. 82-3424, *Shelcore, Inc.* v. *CBS, Inc.* **Same, filed** Oct. 13, 1982, D.C., E.D. Pa. (Philadelphia), Doc. 82-4493, *Shelcore, Inc.* v. *Durham Industries, Inc.*

4,209,088. (See 4,130,920.)

4,211,442, John D. Hansen, LOCK STRIKE, **filed** Sept. 8, 1981, D.C., N.D. Calif. (San Francisco), Doc. C81-3548WHO, *John D. Hansen* v. *Schlage Lock Co.* Order of Dismissal filed Aug. 16, 1982.

4,213,927, John D. Alberti, METHOD OF MAKING PICTURE PHONOGRAPH RECORD, **filed** Sept. 27, 1982, D.C., C.D. Calif. (Los Angeles), Doc. 82 5011, *John D. Alberti* v. *Custom Record Mfg. Co., doing business as Cadet Records, Inc.*

4,217,254, Synthetic Surfaces, inc., HIGH GREEN STRENGTH CURABLE URETHANE ADHESIVE; **4,256,615, same,** ADHESIVE CONSISTING ESSENTIALLY OF A RICINOLEATE URETHANE POLYOL AND A CHLORINATED RUBBER; **4,340,682, same,** ADHESIVE CONSISTING ESSENTIALLY OF AN ISOCYANATE TERMINATED RICINOLEATE PREPOLYMER AND A CHLORINATED POLYVINYL CHLORIDE, **filed** Nov. 16, 1982, D.C.N.J. (Newark), Doc. 82-3850, *Synthetic Surfaces, Inc.* v. *Lord Corp.*

4,219,821, Regency Electronics, Inc., AUTOMATIC DIRECTION FINDING SYSTEM, **filed** Oct. 26, 1982, D.C., M.D. Fla. (Tampa), Doc. 82-1180 CIV T GC, *Regency Electronics, Inc.* v. *Si-Tex Marine Electronics, Inc.*

4,232,679, Pacesetter Systems, Inc., PROGRAMMABLE HUMAN TISSUE STIMULATOR, **filed** Sept. 13, 1982, D.C., S.D. Fla. (Miami), Doc. 82-1928-CIV-SMA, *Pacesetter Systems, Inc.* v. *Medtronic, Inc.*

4,233,909, Itel Corp., RAILWAY CAR ASSEMBLY COMPOSED OF A SERIES OF ARTICULATELY INTERCONNECTED CARS, **filed** Sept. 16, 1982, D.C., N.D. Ill. (Chicago), Doc. 82 C 5722, *Itel Corp.* v. *Thrall Car Mfg. Co.*

4,234,134, Helena Laboratories Corp., PAPER TENSIONING DEVICE, **filed** Jan. 8, 1982, D.C.N.J. (Camden), Doc. 82-47, *Medical Research and Product Development Corp.* v. *Helena Laboratories Corp.* Order of dismissal without prejudice filed Sept. 1, 1982.

4,235,458, Gerald Erickson, BOTTLE CARRIER, **filed** Nov. 23, 1982, D.C., N.D. Tex. (Dallas), Doc. CA3-82-1875-H, *Gerald Erickson, et al* v. *A. Quelch & Associates, Inc., et al.*

4,237,896, Senil Nominees Pty. Ltd. and Australian Merino Wool Harvesting Ltd., IMMOBILIZING ANIMALS, **filed** Aug. 13, 1982, D.C. Neb. (Omaha), Doc. CV82-0-386, *Senil Nominees Pty. Ltd. and Australian Merino Wool Harvesting Ltd.* v. *Ag-Tronic, Inc.*

4,242,305. (See 4,123,506.)

4,248,392. (See 4,179,081.)

4,256,615. (See 4,217,254.)

4,262,803, Union Carbide Corp., BAGS WICKETED ON A FLEXIBLE BINDING; **4,277,930, same, filed** Aug. 6, 1982, D.C., N.D. Ill. (Chicago), Doc. 82 C 4884, *Union Carbide Corp.* v. *American Can Co.*

4,266,687, U.S. Clinical Products, Inc., SEALING COVER AND METHOD FOR RESEALING AN INTRAVENOUS CONTAINER, **filed** Dec. 6, 1982, D.C. Colo. (Denver), Doc. 82-Z-2080, *U.S. Clinical Products, Inc.* v. *Baxa Corp.*

4,272,649, Williams Electronics, Inc., PROCESSOR CONTROLLED SOUND SYNTHESIZER, **filed** Aug. 25, 1982, D.C., N.D. Ill. (Chicago), Doc. 82 C 5264, *Williams Electronics, Inc.* v. *Orbit Alley, Inc.*

4,277,930. (See 4,262,803.)

4,278,972. (See 4,136,359.)

4,285,016, Microcomputer Systems Corp., DISC, TAPE AND HYBRID DISC-TAPE MEMORY APPARATUS AND DRIVE ASSEMBLY, **filed** Aug. 2, 1982, D.C., N.D. Calif. (San Francisco), Doc. C-82-4096-SW, *Microcomputer Systems Corp.* v. *Pragma Data Systems, Inc.*

4,288,134, Knaack Mfg. Co., STORAGE CABINET; **4,290,281, same,** LOCK SYSTEM; **D. 260,062, same,** STORAGE CABINET OR SIMILAR ARTICLE, **filed** Aug. 6, 1982, D.C., N.D. Ill. (Chicago), Doc. 82 C 4869, *Knaack Mfg. Co.* v. *Stormaster, Inc., et al.*

4,289,190, Dynaforce Corp., PLASTIC STRIP CLOSURES AND METHODS OF PROTECTING THE SAME, **filed** Nov. 16, 1982, D.C. Del. (Wilmington), Doc. 82-740, *Dynaforce Corp.* v. *Awling Rubber Corp.*

4,290,281. (See 4,288,134.)

4,291,524, Alloway Mfg., Inc., METHOD OF DEFOLIATING; **4,308,714, same,** THREE DRUM DEFOLIATOR, **filed** Aug. 27, 1982, D.C. N. Dak. (Fargo), Doc. A3-82-139, *Alloway Mfg., Inc.* v. *Wic, Inc., et al.*

4,296,498. (See 4,078,265.)

4,301,560, Richard Fraige, WATERBED MATTRESS, **filed** Oct. 6, 1982, D.C., C.D. Calif. (Los Angeles), Doc. 82 5194, *Richard Fraige* v. *Intex Corp., et al.*

4,306,562, Cook, Inc., TEAR APART CANNULA, **filed** Nov. 12, 1982, D.C., M.D. Fla. (Tampa), Doc. 82-1252 CIV T WC, *Cook, Inc.* v. *Hart Medical, Inc., et al.*

4,307,537, David E. Bergmann, AIRBORNE FLOATING LIFT-WEIGHT BALANCED TOY, **filed** June 2, 1982, D.C., N.D. Ind. (Fort Wayne), Doc. F82-193, *Aberg, Inc. and David E. Bergmann* v. *World-Wide Marketing, Inc., et al.* Defendants permanently enjoined against infringing Pat. No. 4,307,537. **Filed** Sept. 23, 1982. **Same, filed** May 27, 1982, D.C. Minn. (St. Paul), Doc. 3-82-635, *Aberg, Inc. and David E. Bergmann* v. *M-D Marketing, et al.* Plaintiff is the owner of Pat. No. 4,307,537. Defendants are permanently enjoined against infringing this patent during unexpired term. Filed Oct. 5, 1982. **Same, filed** May 26, 1982, D.C., N.D. Ohio (Cleveland), Doc. 82-1385, *Aberg, Inc. and David E. Bergmann,* v. *World-Wide Marketing, Inc., et al.* Plaintiff is the owner of Pat. No. 4,307,537. Defendants are permanently enjoined against further infringing plaintiff's patent. Filed Oct. 12, 1982.

4,308,714. (See 4,291,524.)

4,308,901, Ag-Bag Corp., AGRICULTURAL BAG LOADING APPARATUS BEAKING MECHANISM; **4,310,036, same,** TUNNEL CLEAN OUT MECHANISM FOR AN AGRICULTURAL BAG LOADING APPARATUS; **4,337,805, same,** AGRICULTURAL BAG LOADING APPARATUS, **filed** Sept. 10, 1982, D.C., E.D. Pa. (Philadelphia), Doc. 82-3962, *Ag-Bag Corp.* v. *American Ag-Bag, Inc., et al.*

4,310,036. (See 4,308,901.)

4,310,044, M. Allan Schenker, ACCESS SHIELD FOR UNCOVERED REFRIGERATED UNITS, **filed** Sept. 9, 1982, D.C., C.D. Calif. (Los Angeles), Doc. 82 4606, *M. Allan Schenker* v. *Simplex Strip Doors, Inc.*

4,316,371, Fichet-Bauche, HIGH SAFETY BOLT CONTROL DEVICES, **filed** Oct. 26, 1982, D.C., W.D. Va. (Roanoke), Doc. 82-0789, *Medeco Security Locks, Inc.* v. *Fichet-Bauche.*

4,317,017. (See 3,701,872.)

4,318,577, Bunsmaster Bakeries of America, Inc., BULK FOOD DISPLAY BIN; **D. 265,361, same,** DISPLAY BIN, **filed** Sept. 9, 1982, D.C., W.D.N.Y. (Buffalo), Doc. 82-Civ-808E, *Bunsmaster Bakeries of America, Inc., et al* v. *C. P. Baking & Food Services, Inc., doing business as Mister Buns Bakery, et al.*

4,318,928. (See 3,968,256.)

4,321,038, Van R. Dental Products, Inc., BRAIDED GINGIVAL RETRACTION CORD, **filed** Aug. 12, 1982, D.C., C.D. Calif. (Los Angeles), Doc. 82 4080, *Van R. Dental Products, Inc.* v. *Belport Co., Inc.*

4,321,716, Fred J. Shrock, CONVERTIBLE SEATBED, **filed** Sept. 3, 1982, D.C., N.D. Ind. (South Bend), Doc. S82-0426, *Fred J. Shrock* v. *Better Products, Inc.*

4,337,805. (See 4,308,901.)

4,338,507. (See 4,063,059.)

4,340,682. (See 4,217,254.)

4,351,904. (See 3,968,256.)

Re. 28,507. (See 3,659,284.)

Re. 29,922, Sidney O. Sampson, TRACK SELECTION CONTROL MEANS FOR MAGNETIC SIGNAL RECORDING AND REPRODUCING SYSTEMS, **filed** May 7, 1982, D.C. Minn. (Minneapolis), Doc. 4-82-678, *Sidney O. Sampson* v. *Telex Communications, Inc.* **Same, filed** Sept. 10, 1982, D.C., S.D.N.Y., Doc. 82-Civ-6048 CES, *Sidney O. Sampson* v. *Harvey Electronics.*

Re. 30,969. (See 4,120,524.)

D. 238,538, Teknor Apex Co., FLOOR MAT, **filed** July 9, 1982, D.C., N.D. Ill. (Chicago), Doc. 82 C 4283, *Teknor Apex Co.* v. *Park Rubber Co.*

D. 245,833, Patricia K. Dystant, CLOCK-DIAL HAVING PICTURE FRAME HOURLY DESIGNATIONS, **filed** Nov. 12, 1982, D.C., M.D. Fla. (Tampa), Doc. 82-1251 CIV T H, *Names & Numbers, Inc.* v. *Patricia K. Dystant.*

D. 246,292. (See 4,024,734.)

D. 246,617, Chester C. Tomlin, Jr., HAT BAND, **filed** Aug. 2, 1982, D.C., N.D. Ga. (Atlanta), Doc. C82-1606 A, Chester C. Tomlin, Jr. f/u/b/o Quail Art, Inc. v. *Donald L. Collier, doing business as Collier's Atlanta.*

D. 254,186, The Colber Corp., RESISTOR HOUSING, **filed** Oct. 4, 1982, D.C., E.D. Tenn. (Chattanooga), Doc. Civ-1-82-447, *The Colber Corp.* v. *D. M. Steward Mdg. Co.*

D. 256,755, Charles W. Pelton, AUTOMOBILE CENTER CONSOLE CUSHION, **filed** Nov. 5, 1982, D.C., E.D. Mich. (Detroit), Doc. 82-74185, *Charles W. Pelton* v. *John's Corvette Care, Inc.*

D. 259,490, James J. Feuling, FAN HOUSING FOR AN AIR COOLED ENGINE; **D. 259,491, same; D. 261,654, same,** MOUNTING STAND FOR ATTACHING AN ACCESSORY TO AN ENGINE, **filed** Sept. 9, 1982, D.C., S.D. Calif. (San Diego), Doc. 82-1163-N-M, *James J. Feuling* v. *William E. Wood, doing business as Aluminum Accessories, et al.*

D. 259,491. (See D. 259,490.)

D. 260,062. (See 4,288,134.)

D. 260,432, Gabor Kadar, A COMBINED STAND AND CONTAINER FOR STORING LIQUIDS, **filed** Oct. 12, 1982, D.C., C.D. Calif. (Los Angeles), Doc. 82 5291, *Neo-Art, Inc. and Gabor Kadar* v. *Hawkeye Distilled Products Co., et al.*

D. 261,096, Petersen Mfg. Co., Inc., HAND TOOL, **filed** Nov. 2, 1982, D.C., C.D. Calif. (Los Angeles), Doc. 82 5667, *Petersen Mfg. Co., Inc.* v. *Central Purchasing, Inc., doing business as Harbor Freight Salvage Co., et al.*

D. 261,547, W. Rod Parke, AN AIR REGULATING NOZZLE, **filed** Aug. 2, 1982, D.C., N.D. Ill. (Rockford), Doc. 82 C 20134, *W. Rod Parke* v. *Milton Industries, Inc.*

D. 261,654. (See D. 259,490.)

D. 265,361. (See 4,318,577.)

D. 265,517, SL Container Corp., STORAGE CART, **filed** Aug. 11, 1982, D.C., C.D. Calif. (Los Angeles), Doc. 82 4060, *SL Container Corp.* v. *Beverly Hills Motoring Accessories.*

DEPARTMENT OF COMMERCE

Patent and Trademark Office

37 CFR Part 2

[Docket No. 30120-11]

Trademark Oppositions; Petitions To Cancel and Affidavits or Declarations Under Section 8 of the Trademark Act

AGENCY: Patent and Trademark Office, Commerce.

ACTION: Final rule.

SUMMARY: The Patent and Trademark Office is amending the rules of practice in trademark cases to eliminate the requirement for verification of oppositions and petitions to cancel; to require that additional requests for extension of time to oppose be filed prior to the expiration of an extension; to require that affidavits or declarations filed under Section 8 of the Trademark Act show use of the mark in commerce; and to clarify and revise certain other procedures for oppositions and petitions to cancel. The amendments are necessary to implement certain trademark provisions of Pub. L. 97-247, enacted Aug. 27, 1982, which provisions are effective six months after the date of enactment, and to revise and codify existing practices so as to assist the orderly and prompt resolution of the issues.

EFFECTIVE DATE: Feb. 27, 1983.

FOR FURTHER INFORMATION CONTACT: As to the rules relating to oppositions and petitions to cancel, Ms. Janet Rice by telephone at (703) 557-3551 or by mail addressed to the Commissioner of Patents and Trademarks. Attention: Ms. Janet Rice, Crystal Sq. 5, Suite 1008, Washington, D.C. 20231. As to the rules relating to affidavits or declarations under Section 8, contact Ms. Paula Hairston by telephone at (703) 557-3882 or by mail addressed to the Commissioner of Patents and Trademarks, Attention: Ms. Paula Hairston, Room CP2-3C-06, Washington, D.C. 20231.

SUPPLEMENTARY INFORMATION: Amendments to rules 2.101, 2.102, 1.103, 2.111, and 2.112, among others, were proposed in a rulemaking notice published in the **Federal Register** on June 29, 1982, at 47 FR 28324, the Patent and Trademark Office Official Gazette of July 27, 1982, at 1020 O.G. 25, and Vol. 24 of BNA's Patent, Trademark & Copyright Journal (July 1, 1982) at p. 236. The purpose of these proposed amendments was to revise and codify existing practices. One of the proposed amendments (not adopted herein) was to interchange rules 2.101 and 2.102. Interested parties were requested to submit written comments on or before Oct. 4, 1982. An oral hearing was held on the same date. Written comments relating to proposed rules 2.101, 2.102, 2.103, 2.111, and 2.112 were submitted by four organizations and one individual. Three persons testified at the oral hearing.

Two of the individuals testified in behalf of organizations which also submitted written comments. Each of the two testified that the organization which he represented approved of the proposed amendments except as indicated in the organization's written comments. The third individual testified concerning the history and purpose of the proposed amendments and expressed his approval of them.

However, further changes to several of these proposed rules, as well as amendments to other trademark rules, were required in order to implement certain trademark provisions of intervening Pub. L. 97-247 enacted Aug. 27, 1982. The text of the law is published in the Patent and Trademark Office Official Gazette of Oct. 26, 1982, at 1023 O.G. 31.

Provisions of Pub. L. 97-247 relating to trademark fees were implemented by trademark fee rule changes which were published in the **Federal Register** on July 30, 1982 at 47 FR 33086 and which took effect on Oct. 1, 1982. That final rule document was based on the public law in effect at that time, Pub. L. 96-517, and on H.R. 6260, which was then pending but is now Pub. L. 97-247. As a result of the fee rule changes, which were subsequently confirmed in a document published in the **Federal Register** on Sept. 17, 1982 at 47 FR 41272, further changes to rule 2.101 (identified in the June 29, 1982 notice as 2.102) were required.

Additional changes to rules 2.101 (identified in the June 29, 1982 notice as 2.102), 2.103 and 2.111, as well as changes to rules 2.161 and 2.162, were required in order to implement the provisions of Sections 8 and 9 of Public Law 97-247. Section 8 of the new law amends Section 8 of the Trademark Act of 1946 (15 U.S.C. 1058) to require that an affidavit or declaration filed under Section 8 show use of the mark in commerce. Section 9(a) amends Section 13 of the Trademark Act (15 U.S.C. 1063) to eliminate the requirement for verification of oppositions (thus permitting a party's attorney to sign an opposition before the Trademark Trial and Appeal Board), and to require that additional requests for extension of time to oppose be filed prior to the expiration of the extension. Section 9(b) amends Section 14 of the Trademark Act (15 U.S.C. 1064) to eliminate the requirement for verification of petitions to cancel (thus permitting a party's attorney to sign petitions to cancel before the Trademark Trial and Appeal Board). The provisions of Sections 8 and 9 of the new law which are implemented by the rules amended in the present notice are effective Feb. 27, 1983.

The proposed changes to rules 2.101 (identified in the June 29, 1982 notice as 2.102), 2.103, 2.111, 2.161, and 2.162 required as a result of the enactment of Pub. L. 97-247 were published in the **Federal Register** on Nov. 24, 1982 at 47 FR 53054. In that notice, as in the June 29, 1982; notice, rules 2.101 and 2.102 were interchanged, and it was indicated in the notice that although rules 2.102 (identified in the notice as 2.101) and 2.112, as proposed in the June 29, 1982, notice, already included the necessary changes called for by Pub. L. 97-247 and thus were not being republished, further comments on the two proposed rules would be entertained. Interested parties were requested to submit written comments on or before Jan. 7, 1983. Comments were received from one organization.

Other provisions of Pub. L. 97-247 relevant to trademark cases either require no changes in Part 2 of Title 37 CFR or require changes in Part 1 which were proposed in a separate notice.

Sections 10, 11, and 14(c) of the new law amend the Trademark Act but require no changes in the trademark rules of practice. Section 10 amends Section 15 of the Trademark Act (15 U.S.C. 1065) relating to incontestability of registered marks. Under the amended section, a registered mark does not acquire incontestability if its use infringes a valid right acquired under the law of any state or territory by use of a mark or trade name continuing from a date prior to the date of registration. Before the section was amended, the date was the date of publication. Section 11 amends Section 16 of the Act (15 U.S.C. 1066) to correspond to the current practice relating to interferences. The amended section states that an interference will be declared only upon petition to the Commissioner showing extraordinary circumstances. Section 14(c) amends Section 11 of the Act (15 U.S.C. 1061) relating to acknowledgements and verifications. An official authorized to administer oaths in a foreign country may prove such authority by apostille if the foreign country accords like effect to apostilles of designated officials in the United States.

Section 12 of the new law affects practice in both patent and trademark cases. Amendments to the rules in Part 1 which apply to both patent and trademark cases were proposed in a separate notice published in the **Federal Register** on Oct. 27, 1982 at 47 FR 47744.

In summary, this notice of final rulemaking is based upon the notices of proposed rulemaking published in the **Federal Register** on June 29, 1982, at 47 FR 28324 and on Nov. 24, 1982 at 47 FR 53054.

Discussion of Specific Sections Changed

The rules which are being amended are discussed below. (The designation § is used in The Code of Federal Regulations to denominate a rule; lettered subdivisions ("(a)", "(b)", etc.) are subsections of rules; numbered subdivisions ("(1)", "(2)", etc.) are paragraphs within sections or subsections.)

It was proposed in the notice of June 29, 1982, that former §§2.101 and 2.102 be interchanged. That proposal has not been adopted in the amended rules. Further §2.101, as amended, eliminates the requirement for verification of oppositions.

Section 2.101(a), as amended, states when an opposition proceeding is commenced, which is important for the application of §2.135.

Section 2.101(b), as amended, indicates that an opposition should be addressed to the Trademark Trial and Appeal Board, which helps to route mail within the PTO.

Section 2.101(c), as amended, requires that an opposition be filed within thirty days after publication of the application or prior to the expiration of a granted extension of time for filing an opposition.

Section 2.101(d)(1) requires the payment of the statutory fee for an opposition, and provides for the late payment of opposition fee or fees, when a notice of opposition is not accompanied by at least one full fee to oppose one class by one person, if the required fee(s) is submitted to the Patent and Trademark Office within the time limit set in the notification of the defect by the Office. This section incorporates the substance of, and replaces, §2.101(c) which was adopted effective Oct. 1, 1982, 47 FR 33086 at 33111.

Section 2.101(d) (2) and (3) provide, where the fees that are submitted are insufficient for the number of classes being opposed and/or for the number of persons joined as party opposer, an opportunity for submission of the required fees or specification of the class or classes opposed and/or of the party opposers, and provides for the allocation of the insufficient fees if no such specification is made.

Sections 2.102(a) and (b), as amended, repeat, with revisions to clarify the provisions, former §2.102(a).

Section 2.102(c) requires that a notice of opposition be filed within thirty days after publication of the application or prior to expiration of a granted extension of time for filing a notice opposition, and provides that extensions of time to file an opposition aggregating more than 120 days will not be granted except upon (1) the written consent of applicant, or (2) a written request by the potential opposer which states that applicant has consented to the request and which includes proof of service upon applicant, or (3) a showing of extraordinary circumstances.

Section 2.102(d) provides that a request to extend the time for filing a notice of opposition should be submitted in triplicate. This section codifies an existing practice which expedites notification of the Board's action on a request for an extension of time.

Section 2.103 is removed. Since §2.101, as amended, eliminates the requirement for verification of an opposition and allows the attorney to sign an opposition without need for subsequent confirmation, §2.103 is unnecessary.

Sections 2.111 and 2.112, as amended, eliminate the requirement for verification of petitions for cancellation. It was proposed in the notice of June 29, 1982 that the requirement for verification of a petition for cancellation be deleted from §2.112 and be placed in §2.111. The requirement is not included in either section, as amended.

Section 2.111(a) states when a cancellation proceeding is commenced, which is important for the application of §2.134.

Section 2.111(b) incorporates most of the provisions of former §2.111 and also indicates that a petition for can-

cellation should be addressed to the TTAB, which helps to route mail within the PTO.

Section 2.111(c) states the requirement for the payment of the fee(s) due upon filing a petition for cancellation; provides, where the fees that are submitted are insufficient for the number of classes sought to be cancelled and/or for the number of persons joined as party petitioners, an opportunity for submission of the required fees (provided that the five-year period, if applicable, has not expired) or specification of the class or classes sought to be cancelled and/or of the party petitioners; provides for the allocation of the insufficient fees if no such specification is made; and states that the filing date of a petition for cancellation is the date of receipt in the Patent and Trademark Office of the petition with the required fee, and that if the amount of the fee filed with the petition is sufficient for at least one named party petitioner and one class of goods or services but is less than the required amount because multiple party petitioners and/or multiple classes in the registration for which cancellation is sought are involved, and the required additional amount of the fee is filed within the time limit set in the notification of the defect by the Office, the filing date of the petition with respect to the additional party petitioners and/or classes is the date of receipt in the Patent and Trademark Office of the additional fees.

Section 2.112(a) incorporates that part of former §2.112 which described the contents of a petition for cancellation, except that the requirement for verification has been removed.

Section 2.112(b) states the conditions for filing a consolidated petition for cancellation of different registrations owned by the same party.

Section 2.161, as amended, requires that an affidavit or declaration filed under Section 8 of the Trademark Act of 1946 show that the mark is in use in commerce.

Sections 2.162(e), (f) and (g), as amended, require that the affidavit or declaration filed under Section 8 of the Trademark Act of 1946 state that the mark is in use in commerce, and specify the nature of such commerce. The latter requirement is consistent with §2.33(viii) of the trademark rule which requires that the application for trademark registration specify the nature of the commerce in which the mark is used.

Response to Comments on the Rules

All of the comments received in response to the notices of proposed rulemaking published in the **Federal Register** on June 29, 1982, and Nov. 24, 1982, have been given careful consideration, and a number of the suggested modifications have been adopted. The comments and responses appear below.

Comment: One organization opposed the proposal to reverse the order of §§2.101 and 2.102, asserting that a change in the location of §2.101 would be likely to cause confusion, and that the more logical order is to first explain the substance of filing an opposition and then explain how to obtain an extension of time in which to act.

Response: To minimize confusion in view of the numerous recent rule changes and proposed rule changes, the proposal to reverse the order of §§2.101 and 2.102 has been withdrawn.

Comment: One organization noted that in §§2.101 and 2.102, as proposed, the term "opposition", when used to refer to the complaint in an opposition proceeding, has been changed to "notice of opposition". The organization expressed its belief that there is no reason for reverting to the phrase "notice of opposition" except tradition, and that that phrase is confusingly similar to the phrase "notification of opposition".

Response: The proposal to change "opposition" to "notice of opposition" in certain instances has not been adopted.

Comment: Two organizations suggested that §2.101(d) (identified as §2.102(e) and as 2.102(d) in the notices of proposed rulemaking of June 29, 1982, and Nov. 24, 1982, respectively), which deals with insufficient opposition fees and provides for the allocation of the fees submitted, be revised to give opposer(s) an opportunity to select the opposer(s) and/or classes to which the submitted fees apply. One of these organizations suggested that the opposer also be given an opportunity to submit the proper fee(s). Similar comments were made with respect to §2.111(c) (identified in the June 29, 1982 notice as §2.111(d)), which deals with insufficient cancellation fees.

Response: Where the fees submitted are insufficient for each named party opposer or petitioner for each class sought to be opposed or cancelled, it is in fact the practice of the Board to give the opposer(s) or petitioner(s) an opportunity to either submit the proper fees or to select the opposer(s) or petitioner(s) and/or classes to which the submitted fees apply. Accordingly, the sections have been changed to reflect this practice. See also, with respect to insufficient cancellation fees, §2.85(e).

Comment: One member of one of the organizations suggested that the subsections identified as §2.102 (e) and (f) in the notice of proposed rulemaking of June 29, 1982, and as §2.102 (d) and (e) in the notice of proposed rulemaking of Nov. 24, 1982, be consolidated into a single subsection so that all of the provisions concerning insufficient opposition fees will appear in the same subsection. Another organization suggested that these and certain other portions of the rules dealing with fees be moved to §2.6 or a new §2.7.

Response: The suggestion concerning consolidation has been adopted, and the two subsections in question have been consolidated into the single subsection now identified as §2.101(d). Inasmuch as it is believed that the most logical and effective location for these provisions is §2.101, the suggestion that they be moved to §2.6 or a new §2.7 has not been adopted.

Comment: One individual suggested that §2.101(a) (identified as §2.102(a) in the notices of proposed rulemaking) and §2.111(a) be modified by inserting the word "properly" before the word "executed" in order to make it clear that an opposition or cancellation proceeding is not commenced until a properly verified complaint has been filed.

Response: In view of the elimination of the requirement for verification of oppositions and petitions for cancellation, this suggestion is moot.

Comment: One organization suggested, with respect to the phrase "or other person authorized to represent the potential opposer" which appears in §2.102(a) (identified as §2.101(a) in the June 29, 1982 notice of proposed rulemaking), that the type of authorization intended here be explained by inserting a cross reference to §2.12 (b) and (c) and §2.17(b), the sections entitled "Persons who may practice before the Patent and Trademark Office in trademark cases" and "Recognition for representation", respectively.

Response: The subsection has been modified as suggested.

Comment: One organization stated, with respect to §2.102(b) (identified in the June 29, 1982 notice of proposed rulemaking as §2.101(b)), that it agreed with "the PTO's proposed amendment in paragraph (b) regarding 'privity'," but believed that "the intent should be mentioned in the legislative history of the rules."

Response: The substance of §2.102(b), as amended, is identical to the latter portion of former §2.102(a). That is, the amendment is not substantive in nature but rather involves a slight improvement in the wording of the subsection. The provision concerning privity was added by an earlier amendment effective Feb. 1, 1976. The legislative history of that rule change may be found in the notice of proposed rulemaking published in the **Federal Register** on Feb. 11, 1975 at 40 FR 6363 and in the notice of final rulemaking published in the **Federal Register** at 41 FR 756.

Comment: One organization suggested that the phrase "under this section" be deleted from the subsection identified as §2.101(c) in the June 29, 1982 notice of proposed rulemaking (§2.102(c), as amended) so that extensions can be granted without requiring a showing of good cause following an extension which is not made under this section, as, for example, after a blanket extension published in the Official Gazette.

Response: The suggestion has been adopted.

Comment: Two organizations and some of the members of the "cognizant committee" of a third organization commented, with respect to the subsection identified in the June 29, 1982 notice as §2.101(c) (§2.102(c), as amended), that the requirement that a potential opposer seeking an extension of time beyond 120 days based upon the consent of applicant must furnish applicant's consent in writing is unduly harsh and that the potential opposer should be permitted to rely upon applicant's oral consent.

Response: Rule 2.102(c), as amended, permits the potential opposer to rely upon applicant's oral consent provided that the request to extend is accompanied by proof of service upon applicant or its authorized representative. Although proof of service of papers filed in connection with an inter partes proceeding before the Board upon the other parties to the proceeding is required after the proceeding commences, it is not normally required prior to that time. However, where a request for extension of time to oppose beyond 120 days is based upon potential opposer's assertion that applicant has given its oral consent thereto, the requirement for proof of service is necessary in order to provide applicant written confirmation of its oral consent.

Comment: Another portion of the "cognizant committee" of the organization referred to in the comment above suggested, with respect to the same subsection, that either the language regarding written stipulation be deleted or that the word "or" before the phrase "upon a showing of extraordinary circumstances" be changed to "and", thereby making a showing of extraordinary circumstances an essential requirement for any extension of time to oppose beyond 120 days.

Response: It is advantageous both to the Office and to the parties to a potential opposition if the conflict between the parties can be settled without resort to an opposition proceeding. It is believed that the changes suggested by this portion of the committee are unduly restrictive and would cause oppositions to be filed in cases where they might otherwise be avoided. Accordingly, the proposed changes have not been made. It should be noted in this regard that even when a request for extension of time beyond 120 days is based upon the written or oral consent of the applicant, good cause must still be shown for the requested extension. Thus the potential for abuse of the extension of time process which would exist if there were no requirement for a showing of good cause is avoided in §2.102(c) as amended.

Comment: One organization questioned the provisions in §2.111 for the payment of late fees in connection with a petition for cancellation as being possibly inconsistent with §14 of the Trademark Act of 1946, which states that the "petition * * * may, upon payment of the prescribed fee, be filed * * *"; noted that there is the possibility that the five-year period of §14 would pass between the filing of the petition and the payment of the fee as to one or more classes; and suggested that a petition to cancel should not be effective as to any class or person until the fee for that class is paid and the filing is complete.

Response: While it has been held, because of the power granted to the Commissioner by §13 of the Trademark Act of 1946 to extend the time for filing a notice of opposition and to fix a time within which an unverified opposition may be verified, that the payment of the required fee is not jurisdictional in the case of an opposition (See: Marzall v. Libby, McNeill & Libby, 89 USPQ 10 (D.C. Cir. 1951), and Colgate-Palmolive Co. v. Brenner, 148 USPQ 535 (S.D.N.Y. 1965)), the Court of Customs and Patent Appeals has held, in The Williamson-Dickie Manufacturing Co. v. Mann Overall Co., Inc., 149 USPQ 518 (CCPA 1966), that the payment of the required fee for a petition for cancellation is a jurisdictional requirement without which a petition has not been filed in compliance with §14 of the statute. Cf. §9 of the Trademark Act of 1946 (which, like §14, contains no provision granting the Commissioner the power to extend the time for filing), §2.183(b) of the Trademark Rules of Practice, and In re Michaels Stern & Co., Inc., 199 USPQ 382 (Comr. 1978). Further, when multiple classes are combined in a single application or registration, the combined application or registration is regarded as though it were a group of individual applications which have been physically assembled within a single file wrapper bearing a single serial or registration number, and each of these individual applications or registrations must stand or fall on its own merits in pre-registration and post-registration ex parte and inter partes proceedings, so that if an opposition or petition for cancellation is filed with respect to more than one of the classes in the combined application or registration, there are effectively multiple separate proceedings, each of which must be determined on its own facts and merits. See, for example: Federated Foods, Inc. v. Fort Howard Paper Co., 192 USPQ 24 (CCPA 1974), and In re Bombardier Limited, 204 USPQ 943 (Comr. 1979). Similarly, when multiple persons are named in a complaint as party opposers or petitioners, each must show that it would be damaged by the issuance or continued existence of the registration in question, so that if two different persons, for example, are joined as party petitioners, there are effectively two different cancellation proceedings, each of which must be determined on its own merits. It follows from the foregoing that when a petition for cancellation involves multiple classes and/or party petitioners, the required fee is jurisdictional with respect to each class and/or party petitioner, that is, that the petition for cancellation is not effective as to any class or person until the fee for that class or person has been received by the Office; and that if the five-year period of §14 of the Trademark Act of 1946 expires between the filing of the petition and the payment of the fee as to one or more classes or party petitioners, the petition as those classes or party petitioners can be entertained by the Trademark Trial and Appeal Board only to the extent that the petition is based upon the provisions of §14 (c), (d) or (e) or §24 of the statute or seeks cancellation of a registration issued under the Act of 1920. Accordingly, §2.111(a) has been revised to state that a cancellation proceeding is commenced by the timely filing of a petition for cancellation, together with the required fee, in the Patent and Trademark Office; the last sentence of subsection (b) has been revised to indicate that in those cases where the five-year limitation is applicable, both the petition and the required fee must be filed within the five-year period; in subdivisions (1) and (2) of subsection (c) (identified in the notice of proposed rulemaking of June 29, 1982, as subsection (d)), the provision of an opportunity to submit additional fees is limited, if the five-year period is applicable, to those cases in which the period has not expired; and a new subdivision (3) has been added to subsection (c) stating that the filing date of a petition for cancellation is the date of receipt in the Patent and Trademark Office of the petition together with the required fee, and that if the amount of the fee filed with the petition is sufficient for at least one named party petitioner and one class of goods or services but is less than the required amount because multiple party petitioners and/or multiple classes in the registration for which cancellation is sought are involved, and the required additional amount of the fee is filed within the time limit set in the notification of the defect by the Office, the filing date of the petition with respect to the additional party petitioners and/or classes is the date of receipt in the Patent and Trademark Office of the additional fees.

Comment: One organization suggested that a cross reference to §2.6 be added to §2.111(c)(1) (identified in the June 29, 1982, notice of proposed rulemaking as §2.111(d)(1)) along with the reference to §2.85(e).

Response: A cross reference to §2.6 has been added to

§2.111(c)(1), along with the reference to §2.85(e).

Comment: One organization objected to §2.162(e) to the extent that it requires that a statement of use in commerce "must be supported by evidence which shows that the mark is in use in commerce * * *," and recommended that the words "in commerce" be deleted from the quoted phrase. The organization indicated that while it did not object to the requirement of use in commerce, nor to the requirement of a showing that the mark is in use, it did object to a requirement of a showing that the mark is in use in commerce since such a showing could not be accomplished by a mere specimen but would also require invoices or the like.

Response: The subsection has been modified as suggested.

Environmental, Energy, and Other Considerations

The rule change will not have a significant impact on the quality of the human environment or the conservation of energy resources.

The rule change will not have a significant adverse economic impact on a substantial number of small entities (Regulatory Flexibility Act, Pub. L. 96–354). The rule change includes no additional or increased fees. Substantive rights to use valuable trademarks are not adversely affected. The rule change serves to implement the required trademark provisions of Pub. L. 97–247.

The rule change does not impose a record keeping or reporting burden under the Paperwork Reduction Act of 1980, 44 U.S.C. 3501 et seq. No additional information is required from the public. No additional records are required to be maintained by the Patent and Trademark Office because there are no additional fees or proceedings to monitor.

The Patent and Trademark Office has determined that this rule change is not a major rule under Executive Order 12291. The annual effect on the economy will be less than $100 million. There will be no major increase in costs or prices for consumers, individual industries, Federal, State, or local government agencies, or geographic regions. There will be no significant, adverse effects on competition, employment, investment, productivity, innovation, or on the ability of United States based enterprises to compete with foreign based enterprises in domestic or export markets.

List of Subjects in 37 CFR Part 2

Administrative practice and procedure, Courts, Lawyers, Trademarks.

Amendment of Regulations

After consideration of the comments received and pursuant to the authority contained in 15 U.S.C. 1123, Part 2 of Title 37 of the Code of Federal Regulations is amended as set forth below.

PART 2—RULES OF PRACTICE IN TRADEMARK CASES

1. Section 2.101 is revised to read as follows:

§2.101 Filing an opposition.

(a) An opposition proceeding is commenced by the filing of an opposition in the Patent and Trademark Office.

(b) Any person who believes that he would be damaged by the registration of a mark on the Principle Register may oppose the same by filing an opposition, which should be addressed to the Trademark Trial and Appeal Board.

(c) The opposition must be filed within thirty days after publication (§2.80) of the application being opposed or within an extension of time (§2.102) for filing an opposition.

(d)(1) The opposition must be accompanied by the required fee for each party joined as opposer for each class in the application for which registration is opposed (see §2.6(1)). If no fee, or a fee insufficient to pay for one person to oppose the registration of a mark in at least one class, is submitted within thirty days after publication of the mark to be opposed or within an extension of time for filing an opposition, the opposition will not be refused if the required fee(s) is submitted to the Patent and Trademark Office within the time limit set in the notification of this defect by the Office.

(2) If the fees submitted are sufficient to pay for one person to oppose registration in at least one class but are insufficient for an opposition against all of the classes in the application, and the particular class or classes against which the opposition is filed are not specified, the Office will issue a written notice allowing opposer until a set time in which to submit the required fee(s) or to specify the class or classes opposed. If the required fee(s) is not submitted, or the specification made, within the time set in the notice, the opposition will be presumed to be against the class or classes in ascending order, beginning with the lowest numbered class and including the number of classes in the application for which the fees submitted are sufficient to pay the fee due for each class.

(3) If persons are joined as party opposers, and the fees submitted are sufficient to pay for one person to oppose registration in at least one class but are insufficient for each named party opposer, the Office will issue a written notice allowing the named party opposers until a set time in which to submit the required fee(s) or to specify the opposer(s) to which the submitted fees apply. If the required fee(s) is not submitted, or the specification made, within the time set in the notice, the first named party will be presumed to be the party opposer and additional parties will be deemed to be party opposers to the extent that the fees submitted are sufficient to pay the fee due for each party opposer. If persons are joined as party opposers against the registration of a mark in more than one class, the fees submitted are insufficient, and no specification of opposers and classes is made within the time set in the written notice issued by the Office, the fees submitted will be applied first on behalf of the first-named opposer against as many of the classes in the application as the submitted fees are sufficient to pay, and any excess will be applied on behalf of the second-named party to the opposition against the classes in the application in ascending order.

2. Section 2.102 is revised to read as follows:

§2.102 Extension of time for filing an opposition.

(a) Any person who believes that he would be damaged by the registration of a mark on the Principal Register may file a written request to extend the time for filing an opposition. The written request may be signed by the potential opposer or by an attorney at law or other person authorized, in accordance with §2.12 (b) and (c) and §2.17(b), to represent the potential opposer.

(b) The written request to extend the time for filing an opposition must identify the potential opposer with reasonable certainty. Any opposition filed during an extension of time should be in the name of the person to whom the extension was granted, but an opposition may be accepted if the person in whose name the extension was requested was misidentified through mistake or if the opposition is filed in the name of a person in privity with the person who requested and was granted the extension of time.

(c) The written request to extend the time for filing an opposition must be filed in the Patent and Trademark Office before the expiration of thirty days from the date of publication or within any extension of time previously granted, should specify the period of extension desired, and should be addressed to the Trademark Trial and Appeal Board. A first extension of time for not more than thirty days will be granted upon request. Further extensions of time may be granted by the Board for good cause. In addition, extensions of time to file an opposition aggregating more than 120 days from the date of publication of the application will not be granted except upon (1) a written consent or stipulation signed by the applicant or its authorized representative, or (2) a written request by the potential opposer or its authorized representative stating that the applicant or its authorized representative has consented to the request, and including proof of service on the applicant or its authorized representative, or (3) a showing of extraordinary circumstances, it being considered that a potential opposer has an adequate alternative remedy by a petition for cancellation.

(d) Every request to extend the time for filing a notice of opposition should be submitted in triplicate (original plus two copies).

§2.103 [Removed]

3. Section 2.103 is removed.

4. Section 2.111 is revised to read as follows:

§2.111 Filing petition for cancellation.

(a) A cancellation proceeding is commenced by the timely filing of a petition for cancellation, together with the required fee, in the Patent and Trademark Office.

(b) Any person who believes that he is or will be damaged by a registration may file a petition, which should be addressed to the Trademark Trial and Appeal Board, to cancel the registration in its entirety or for each class in the registration specified in the petition. The petition may be filed at any time in the case of registrations on the Supplemental Register or under the Act of 1920, or registrations under the Act of 1881 or the Act of 1905, which have not been published under §12(c) of the Act of 1946, or on any ground specified in §14 (c) or (e) of the Act of 1946. In all other cases the petition and the required fee must be filed within five years from the date of registration of the mark under the Act of 1946 or from the date of publication under §12(c) of the Act of 1946.

(c)(1) The petition must be accompanied by the required fee for each class in the registration for which cancellation is sought (see §§2.6(1) and 2.85(e)). If the fees submitted are insufficient for a cancellation against all of the classes in the registration, and the particular class or classes against which the cancellation is filed are not specified, the Office will issue a written notice allowing petitioner until a set time in which to submit the required fee(s) (provided that the five-year period, if applicable, has not expired) or to specify the class or classes sought to be cancelled. If the required fee(s) is not submitted, or the specification made, within the time set in the notice, the cancellation will be presumed to be against the class or classes in ascending order, beginning with the lowest numbered class, and including the number of classes in the registration for which the fees submitted are sufficient to pay the fee due for each class.

(2) If persons are joined as party petitioners, each must submit a fee for each class for which cancellation is sought. If the fees submitted are insufficient for each named party petitioner, the Office will issue a written notice allowing the named party petitioners until a set time in which to submit the required fee(s) (provided that the five-year period, if applicable, has not expired) or to specify the petitioner(s) to which the submitted fees apply. If the required fee(s) is not submitted, or the specification made, within the time set in the notice, the first named party will be presumed to be the party petitioner and additional parties will be deemed to be party petitioners to the extent that the fees submitted are sufficient to pay the fee due for each party petitioner. If persons are joined as party petitioners against a registration sought to be cancelled in more than one class, the fees submitted are insufficient, and no specification of parties and classes is made within the time set in the written notice issued by the Office, the fees submitted will be applied first on behalf of the first-named petitioner against as many of the classes in the registration as the submitted fees are sufficient to pay, and any excess will be applied on behalf of the second-named party to the petition against the classes in the registration in ascending order.

(3) The filing date of the petition is the date of receipt in the Patent and Trademark Office of the petition together with the required fee. If the amount of the fee filed with the petition is sufficient to pay for at least one person to petition to cancel one class of goods or services but is less than the required amount because multiple party petitioners and/or multiple classes in the registration for which cancellation is sought are involved, and the required additional amount of the fee is filed within the time limit set in the notification of the defect by the Office, the filing date of the petition with respect to the additional party petitioners and/or classes is the date of receipt in the Patent and Trademark Office of the additional fees.

5. Section 2.112 is revised to read as follows:

§2.112 Contents of petition for cancellation.

(a) The petition to cancel must set forth a short and plain statement showing how the petitioner is or will be damaged by the registration, state the grounds for cancellation, and indicate the respondent party to whom notification shall be sent. A duplicate copy of the petition, including exhibits, shall be filed with the petition.

(b) Petitions to cancel different registrations owned by the same party may be joined in a consolidated petition when appropriate, but the required fee must be included for each party joined as petitioner for each class sought to be cancelled in each registration against which the petition to cancel is filed.

6. Section 2.161 is revised to read as follows:

§2.161 Cancellation for failure to file affidavit or declaration during sixth year.

Any registration under the provisions of the Act of 1946 and any registration published under the provisions of section 12(c) of the Act (§2.153) shall be cancelled as to any class in the registration at the end of six years following the date of registration or the date of such publication, unless within one year next preceding the expiration of such six years the registrant shall file in the Patent and Trademark Office an affidavit or declaration in accordance with §2.20 showing that said mark is in use in commerce as to such class or showing that its nonuse as to such class is due to special circumstances which excuse such nonuse and is not due to any intention to abandon the mark.

7. Section 2.162 is amended by revising paragraphs (e), (f) and (g) to read:

§2.162 Requirements for affidavit or declaration during sixth year.

* * * * *

(e) State that the registered mark is in use in commerce and specify the nature of such commerce (except under paragraph (f) of this section). The statement must be supported by evidence which shows that the mark is in use, and normally such evidence consists of a specimen or a facsimile specimen which is currently in use, or a statement of facts concerning use. The supporting evidence should be submitted with the affidavit or declaration, but if it is not or if the evidence submitted is found to be deficient, the evidence, or further evidence, may be submitted and considered even though filed after the sixth year has expired;

(f) If the registered mark is not in use in commerce, recite facts to show that nonuse is due to special circumstances which excuse such nonuse and is not due to any intention to abandon the mark. If the facts recited are found not to be sufficient, further evidence or explanation may be submitted and considered even though filed after the sixth year has expired; and

(g) Contain the statement of use in commerce or statement as to nonuse and appropriate evidence, as required in paragraphs (e) and (f) of this section, for each class to which the affidavit or delcaration pertains in this registration.

(Secs. 8 and 9, Pub. L. 97-247 (96 Stat. 320))

DONALD J. QUIGG,
Jan. 19, 1983. *Deputy Commissioner of Patents and Trademarks.*

[FR Doc. 83-2550 Filed 1-27-83; 8:45 am]
BILLING CODE 3510-16-M

Status of PTO Services

The following is an update of the status of PTO services as of Jan. 31, 1983:

Service Item	FY 1983 Performance Goal (Calendar Days)	Actual	Comment
Filing Receipts:			
Patents	22	40	Reduced by 6 days in the past month.
Trademarks	30	119	Delays continue due to extremely large number of applications filed during September.
Patent Copies:			
Window Coupons	5	94% within 5 days	Problems encountered in the initial phase of implementing an automated control system are being overcome.
Mail Coupons*	29	97% within 29 days	
Letter Orders*	34	94% within 34 days	
Certified Copies:			
Trademark Registrations	30	11	
Applications-As-Filed	20	99% within 20 days	
File-Wrapper/Contents	N/A	99% within 15 days	
Walk-up Certification	1	99% within 1 day	
Trademark Search Library:			
Filing Drawings	21	118	Delays continue due to extremely large number of applications filed during September.
Filing Reg. Certificates	3	9	
Assignments			
Patents	25	61	Goals should be reached by mid-summer.
Trademark	25	71	
Patent Official Gazette			
In Bookstore	Issue Date	On schedule	
Mailed	Issue Date	Avg. 1 day late	
Patent Grants Mailed	Issue Date	1 day late	
Patent Copies Available	Issue Date	85%	95% available by day after Issue Date.
Trademark Official Gazette			
In Bookstore	Issue Date	On schedule	
Mailed	Issue Date	Avg. 1.5 days late	
Trademark Regs. Mailed	Issue Date	2 days late	

*Goal now includes mail processing and delivery time.

IMPROVEMENTS TO SERVICES

- *Public Service Center* — On Feb. 28, 1983, the Public Service Center will open as a new Patent and Trademark Office facility. The Center is being put into operation to improve the office services to the general public and the patent community.

  The Center will be located temporarily in Crystal Plaza, Building 3, Room 2C30 and will be permanently located in Building 3, Room 1D01 after this space is renovated. The permanent location will make the Center easily accessible from the Public Search Room.

  The Center is being established to process walk-in and written inquiries pertaining to specific customer problems in obtaining copies of U.S. patents and trademark registrations, certified and uncertified copies of official PTO documents, and problems in obtaining any PTO files. Other services are planned to be added in the future as needs arise.

  Basically, the Center will be responsible for determining why a specific service has not been supplied within a reasonable length of time and attempt to expedite delivery immediately. The Center is not, however, intended to be an initial ordering facility for any service provided.

  General procedures for obtaining service will be available from the Center on Feb. 28.

  Window Coupons for Patent and Trademark Copies — Window coupon pick-up has been changed to the following:

  8:30 a.m.
  10:15 a.m.
  12:30 p.m.
  3:00 p.m.
  5:00 p.m.*

*Coupons picked-up at this time will have a request date of the next work day.

THERESA A. BRELSFORD,
Assistant Commissioner for Administration.

Jan. 31, 1983.

PATENT NOTICES

Certificates of Correction for the Week of Feb. 22, 1983

Re. 30,636	4,340,241	4,352,449	4,357,553
Re. 30,923	4,340,382	4,352,549	4,357,894
3,898,134	4,340,473	4,352,620	4,358,121
4,067,779	4,341,908	4,352,643	4,358,680
4,192,672	4,342,430	4,353,018	4,358,926
4,215,738	4,342,694	4,353,147	4,358,975
4,227,470	4,342,918	4,353,198	4,359,283
4,237,389	4,343,118	4,353,294	4,359,338
4,249,001	4,344,946	4,353,398	4,359,553
4,254,871	4,346,641	4,353.498	4,359,759
4,282,062	4,347,424	4,353,934	4,360,096
4,288,588	4,347,471	4,354,064	4,360,215
4,297,303	4,347,498	4,354,231	4,360,700
4,310,412	4,347,579	4,354,244	4,360,967
4,314,393	4,347,586	4,354,254	4,360,997
4,317,844	4,347,765	4,354,259	4,361,985
4,320,133	4,348,210	4,354,618	4,362,035
4,321,387	4,348,375	4,354,944	4,362,304
4,322,426	4,348,664	4,355,406	4,362,583
4,324,877	4,348,746	4,355,495	4,362,697
4,325,016	4,348,803	4,355,694	4,363,020
4,329,367	4,349,434	4,355,739	4,363,117
4,329,678	4,349,763	4,355,797	4,363,204
4,330,387	4,349,887	4,355,810	4,363,321
4,331,394	4,349,908	4,355,869	4,363,945
4,334,234	4,350,445	4,356,034	4,364,222
4,334,618	4,350,504	4,356,086	4,364,654
4,336,756	4,350,616	4,356,314	4,364,716
4,336,791	4,350,687	4,356,447	4,365,187
4,336,926	4,351,032	4,356,481	4,365,641
4,337,459	4,351,133	4,356,905	4,366,444
4,338,292	4,351,443	4,357,190	4,366,565
4,338,770	4,351,943	4,357,344	4,366,854
4,338,820	4,352,362	4,357,382	

Disclaimers

3,256,092.—*Paul B. Means, Jr.,* and *Vincent J. Miceli,* Binghamton, N.Y. CORROSION INHIBITORS IN BLEACH SOLUTIONS. Patent dated June 14, 1966. Disclaimer filed Sept. 30, 1982, by the assignee, *Eastman Kodak Co.*

Hereby enters this disclaimer to all claims of said patent.

3,343,959.—*Edward Cerwonka,* Binghamton, N.Y. PHOTOPOLYMERIZABLE COATED LAYERS USING ORGANIC SALTS OF MANGANIC IONS AND METHOD OF PRODUCTION. Patent dated Sept. 26, 1967. Disclaimer filed Sept. 30, 1982, by the assignee, *Eastman Kodak Co.*

Hereby enters this disclaimer to all claims of said patent.

3,345,668.—*John L. Forrest,* Windsor, N.Y. ABRASIVE ARTICLE. Patent dated Oct. 10, 1967. Disclaimer filed Sept. 30, 1982, by the assignee, *Eastman Kodak Co.*

Hereby enters this disclaimer to all claims of said patent.

3,345,927.—*Zoltan Takats,* Vestal, N.Y. APPARATUS FOR RAPID DEVELOPMENT OF PHOTOGRAPHIC FILM. Patent dated Oct. 10, 1967. Disclaimer filed Sept. 30, 1982, by the assignee, *Eastman Kodak Co.*

Hereby enters this disclaimer to all claims of said patent.

3,367,777.—*Alex P. Altavilla,* Johnson City, N.Y. PREVENTION OF SILVER OCCLUSION IN COLOR PHOTOGRAPHY. Patent dated Feb. 6, 1968. Disclaimer filed Sept. 30, 1982, by the assignee, *Eastman Kodak Co.*

Hereby enters this disclaimer to all claims of said patent.

3,390,061.—*Steven Levinos,* Vestal, N.Y. PROTECTIVE LOCALIZED AREA RESIN COATINGS FOR ELECTROPLATING. Patent dated June 25, 1968. Disclaimer filed Sept. 30, 1982, by the assignee, *Eastman Kodak Co.*

Hereby enters this disclaimer to all claims of said patent.

3,440,047.—*Steven Levinos,* Vestal and *John Bergfjord,* Binghamton, N.Y. PHOTOPOLYMER OFFSET PRINTING PLATES OF THE ETCH TYPE. Patent dated Apr. 22, 1969. Disclaimer filed Sept. 30, 1982, by the assignee, *Eastman Kodak Co.*

Hereby enters this disclaimer to all claims of said patent.

3,493,371.—*Albert Lucien Poot,* Kontich, Belgium. RADIATION-SENSITIVE RECORDING MATERIAL. Patent dated Feb. 3, 1970. Disclaimer filed Sept. 30, 1982, by the assignee, *Eastman Kodak Co.*

Hereby enters this disclaimer to all claims of said patent.

3,556,789.—*Carl E. Johnson* and *Dewey M. Dumers,* Binghamton, N.Y. COLOR OSCILLOGRAPH PROCESSING. Patent dated Jan. 19, 1971. Disclaimer filed Sept. 30, 1982, by the assignee, *Eastman Kodak Co.*

Hereby enters this disclaimer to all claims of said patent.

3,583,969.—*Guenther H. Klinger,* Binghamton, N.Y., and *Peter A. Landskroener,* Bernardsville, N.J. COLOR FORMERS FOR INCORPORATION IN PHOTOGRAPHIC EMULSIONS COMPRISING REACTION PRODUCT OF AN AQUEOUS ALKALINE GELATIN SOLUTION AND ALPHA-NAPTHOLS, 1-ARYLPYRAZOLONES OR ACYLACETARYLIDES CONTAINING SULFO OR CARBOXY GROUPS. Patent dated June 8, 1971. Disclaimer filed Sept. 30, 1982, by the assignee, *Eastman Kodak Co.*

Hereby enters this disclaimer to all claims of said patent.

3,607,292.—*Edward J. Cerwonka,* Binghamton, N.Y. TRIACRYLYLDIETHYLENETRIAMINE, METHOD OF PRODUCING THE SAME, AND PHOTOPOLYMERIZATION PROCESS AND SYSTEM UTILIZING THE SAME. Patent dated Sept. 21, 1971. Disclaimer filed Sept. 30, 1982, by the assignee, *Eastman Kodak Co.*

Hereby enters this disclaimer to all claims of said patent.

3,794,269.—*James E. Hoover,* Binghamton, N.Y. FILM CARTRIDGE. Patent dated Feb. 26, 1974. Disclaimer filed Sept. 30, 1982, by the assignee, *Eastman Kodak Co.*

Hereby enters this disclaimer to all claims of said patent.

3,930,296.—*James E. Hoover,* Binghamton, N.Y. METHOD AND MACHINE FOR LOADING AND ASSEMBLING FILM CARTRIDGES. Patent dated Jan. 6, 1976. Disclaimer filed Sept. 30, 1982, by the assignee, *Eastman Kodak Co.*

Hereby enters this disclaimer to all claims of said patent.

4,149,888.—*Frank J. Loprest,* Binghamton, N.Y. TRANSPARENT PHOTOGRAPHIC MASKS. Patent dated Apr. 17, 1979. Disclaimer filed Sept. 30, 1982, by the assignee, *Eastman Kodak Co.*

Hereby enters this disclaimer to all claims of said patent.

4,175,969.—*E. Scudder Mackey,* Binghamton, N.Y. ANTISTATIC PHOTOGRAPHIC X-RAY FILM HAVING A UNIFORM PROTECTIVE SURFACE COATING OF SURFACTANT OLIGOMER OF TETRAFLUOROETHYLENE. Patent dated Nov. 27, 1979. Disclaimer filed Sept. 30, 1982, by the assignee, *Eastman Kodak Co.*

Hereby enters this disclaimer to all claims of said patent.

Reference Collections of U.S. Patents Available for Public Use in Patent Depository Libraries

The libraries listed herein, designated as patent depository libraries, receive current issues of U.S. Patents and maintain collections of earlier issued patents. The scope of these collections varies from library to library, ranging from patents of only recent months or years in some libraries to all or most of the patents issued since 1870, or earlier, in other libraries.

These patent collections are open to public use and each of the patent depository libraries, in addition, offers the publications of the patent classification system (e.g. The Manual of Classification, Index to the U.S. Patent Classification, Classification Definitions, etc.) and provides technical staff assistance in their use to aid the public in gaining effective access to information contained in patents. With one exception, as noted in the table following, the collections are organized in patent number sequence.

Depending upon the library, the patents may be available in microfilm, in bound volumes of paper copies, or in some combination of both. Facilities for making paper copies from either microfilm in reader-printers or from the bound volumes in paper-to-paper copies are generally provided for a fee.

Owing to variations in the scope of patent collections among the patent depository libraries and in their hours of service to the public, anyone contemplating use of the patents at a particular library is advised to contact that library, in advance, about its collection and hours, so as to avert possible inconvenience.

State	*Name of Library*	*Telephone Contact*
Alabama	Birmingham Public Library	(205) 254-2555
Arizona	Tempe: Science Library, Arizona State University	(602) 965-7607
California	Los Angeles Public Library	(213) 626-7555 Ext. 273
	Sacramento: California State Library	(916) 322-4572
	Sunnyvale: Patent Information Clearinghouse*	(408) 738-5580
Colorado	Denver Public Library	(303) 571-2122
Delaware	Newark: University of Delaware	(302) 738-2238
Georgia	Atlanta: Price Gilbert Memorial Library, Georgia Institute of Technology	(404) 894-4508
Illinois	Chicago Public Library	(312) 269-2865
Louisiana	Baton Rouge: Troy H. Middleton Library, Louisiana State University	(504) 388-2570
Massachusetts	Boston Public Library	(617) 536-5400 Ext. 265
Michigan	Detroit Public Library	(313) 833-1450
Minnesota	Minneapolis Public Library & Information Center	(612) 372-6552
Missouri	Kansas City: Linda Hall Library	(816) 363-4600
	St. Louis Public Library	(314) 241-2288 Ext. 214, Ext. 215
Nebraska	Lincoln: University of Nebraska-Lincoln, Engineering Library	(402) 472-3411
New Hampshire	Durham: University of New Hampshire Library	(603) 862-1777
New Jersey	Newark Public Library	(201) 733-7814
New York	Albany: New York State Library	(518) 474-5125
	Buffalo and Erie County Public Library	(716) 856-7525 Ext. 267
	New York Public Library (The Research Libraries)	(212) 930-0850
North Carolina	Raleigh: D. H. Hill Library, N.C. State University	(919) 737-3280
Ohio	Cincinnati & Hamilton County, Public Library of	(513) 369-6936
	Cleveland Public Library	(216) 623-2870
	Columbus: Ohio State University Libraries	(614) 422-6286
	Toledo/Lucas County Public Library	(419) 255-7055 Ext. 212
Oklahoma	Stillwater: Oklahoma State University Library	(405) 624-6546
Pennsylvania	Philadelphia: Franklin Institute Library	(215) 448-1321**
	Pittsburgh: Carnegie Library of Pittsburgh	(412) 622-3138
	University Park: Pattee Library, Pennsylvania State University	(814) 865-4861
Rhode Island	Providence Public Library	(401) 521-7722 Ext. 226
South Carolina	Charleston: Medical University of South Carolina	(803) 792-2372
Tennessee	Memphis & Shelby County Public Library and Information Center	(901) 528-2957
Texas	Dallas Public Library	(214) 748-9071
	Houston: The Fondren Library, Rice University	(713) 527-8101 Ext. 2587
Washington	Seattle: Engineering Library, University of Washington	(206) 543-0740
Wisconsin	Madison: Kurt F. Wendt Engineering Library, University of Wisconsin	(608) 262-6845
	Milwaukee Public Library	(414) 278-3043

All of the above-listed libraries, except the Cleveland Public Library, offer CASSIS (Classification And Search Support Information System), which provides direct, on-line access to Patent and Trademark Office data.

*Collection organized by subject matter.

**Call only between the hours of 10:00 a.m. and 5:00 p.m.

PATENT EXAMINING CORPS

RENE D. TEGTMEYER, Assistant Commissioner

WILLIAM FELDMAN, Deputy Assistant Commissioner

CONDITION OF PATENT APPLICATIONS AS OF December 25, 1982

PATENT EXAMINING GROUPS	Actual Filing Date of Oldest New Case Awaiting Action
CHEMICAL EXAMINING GROUPS	
GENERAL CHEMISTRY AND PETROLEUM CHEMISTRY, GROUP 110—D. E. TALBERT, Director	11-12-80
Inorganic Compounds; Inorganic Compositions; Organo-Metal and Organo-Metalloid Chemistry; Metallurgy; Metallurgical Apparatus; Metal Stock; Electro Chemistry; Batteries; Hydrocarbons; Mineral Oil Technology; Lubricating Compositions; Gaseous Compositions; Fuel and Igniting Devices.	
GENERAL ORGANIC CHEMISTRY, GROUP 120—C. E. VAN HORN, Director	8-06-81
Heterocyclic Amides; Alkaloids; Azo; Sulfur; Misc. Esters; Carbohydrates; Herbicides; Poisons; Medicines; Cosmetics; Steroids; Oxo and Oxy; Quinones; Acids; Carboxylic Acid Esters; Acid Anhydrides; Acid Halides.	
HIGH POLYMER CHEMISTRY, PLASTICS AND MOLDING, GROUP 140—J. O. THOMAS, JR., Director	12-31-81
Synthetic Resins; Rubber; Proteins; Macromolecular Carbohydrates; Mixed Synthetic Resin Compositions; Synthetic Resins With Natural Polymers and Resins; Reclaiming; Pore-Forming; Compositions (Part) e.g., Coating; Molding; Ink; Prosthdontics; Adhesive and Abrading Compositions; Molding, Shaping, Treating Process, and Apparatus Therefor; Irradiation (Part); Bleaching; Dyeing; Leather, Fur and Textile Treating Compositions.	
COATING, LAMINATING AND PHOTOGRAPHY, GROUP 160—S. N. ZAHARNA, Director	1-15-82
Coating: Processes, Apparatus and Misc. Products; Laminating Methods and Apparatus; Stock Materials; Adhesive Bonding; Special Chemical Manufactures; Special Utility Compositions; and Photography.	
SPECIALIZED CHEMICAL INDUSTRIES AND CHEMICAL ENGINEERING, GROUP 170—R. F. WHITE, Director	10-30-81
Fertilizers; Foods; Fermentation; Analytical Chemistry; Reactors; Sugar and Starch; Paper Making; Glass Manufacture; Gas; Heating and Illuminating; Cleaning Processes; Liquid Purification; Distillation; Preserving; Liquid, Gas, and Solid Separation; Gas and Liquid Contact Apparatus; Refrigeration; Concentrative Evaporators; Mineral Oils Apparatus; Misc. Physical Processes.	
ELECTRICAL EXAMINING GROUPS	
INDUSTRIAL ELECTRONICS, PHYSICS AND RELATED ELEMENTS, GROUP 210—S. W. ENGLE, Director	2-13-81
Generation and Utilization; General Applications; Conversion and Distribution; Heating and Related Art Conductors; Switches; Photography; Motion Pictures; Horology; Acoustics; Recorders; Weighing Scales.	
SPECIAL LAWS ADMINISTRATION, GROUP 220—KENNETH L. CAGE, Director	3-20-81
Ordnance, Firearms and Ammunition; Lubrication; Illumination; Nuclear Reactors; Acoustics, Communications, Optics; Radar; Directional Radio; Torpedoes; Seismic Exploring; Cathode Ray Tube Circuitry; Cryptography; Laser Devices; Radioactive Materials; Powder Metallurgy, Rocket Fuels; Special, Fuel, Explosive and Thermic Compositions; Thermal and Photoelectric Batteries.	
INFORMATION TRANSMISSION, STORAGE, AND RETRIEVAL, GROUP 230—EARL LEVY, Director	11-24-80
Communications; Multiplexing Techniques; Television; Facsimile; Data Processing, Computation and Conversion; Storage Devices and Related Arts.	
RECEPTACLES, CLEANING, WINDING, AND MEASURING, GROUP 240—G. M. FORLENZA, Director	1-09-81
Receptacles; Bearings; Joint Packing; Conduits; Switches; Presses; Plumbing Fixtures; Textile Spinning; Cleaning; Food Treating; Agitating; Centrifugal Separating; Geometrical Instruments; Sound Recording; Image Projectors; Web Feeding; Winding and Reeling; Cable Hoists; Measuring and Testing; Indicating; Fluent Material Handling; Shaft; Impellers; Rotary Fluid Motors.	
ELECTRONIC COMPONENT SYSTEMS AND DEVICES, GROUP 250—S. S. MATTHEWS, Director	11-26-79
Semi-Conductor and Space Discharge Systems and Devices; Electronic Component Circuits; Wave Transmission Lines and Networks; Optics; Radiant Energy; Measuring.	
DESIGN, GROUP 290—KENNETH L. CAGE, Director	1-05-81
Industrial Arts; Household, Personal and Fine Arts.	
MECHANICAL EXAMINING GROUPS	
HANDLING AND TRANSPORTING MEDIA, GROUP 310—B. R. GRAY, Director	2-26-81
Conveyors; Hoists; Elevators; Article Handling Implements; Store Service; Sheet Feeding; Dispensing; Fluid Sprinkling; Fire Extinguishers; Coin Handling; Check Controlled Apparatus; Classifying and Assorting Solids; Boats; Ships; Aeronautics; Motor and Land Vehicles and Appurtenances; Brakes; Railways and Railway Equipment.	
MATERIAL SHAPING, ARTICLE MANUFACTURING, TOOLS, GROUP 320—M. M. NEWMAN, Director	4-20-81
Manufacturing Processes, Assembling, Combined Machines, Special Article Making; Metal Deforming; Sheet Metal and Wire Working; Metal Fusion-Bonding, Metal Founding; Machine Tools for Shaping or Dividing; Work and Tool Holders, Woodworking; Tools; Cutlery; Jacks; Fishing, Etc.; Butchering; and Books and Printed Matter.	
AMUSEMENT, HUSBANDRY, PERSONAL TREATMENT, INFORMATION, GROUP 330—R. E. AEGERTER, Director	2-13-80
Amusement and Exercising Devices; Projectors; Animal and Plant Husbandry; Plants; Harvesting; Earth Working and Excavating; Tobacco; Artificial Body Members; Dentistry; Jewelry; Surgery; Toiletry; Printing; Typewriters; Information Dissemination.	
HEAT, POWER, AND FLUID ENGINEERING, GROUP 340—D. J. STOCKING, Director	11-17-80
Power Plants; Combustion Engines; Fluid Motors; Reaction Motors; Pumps; Rotary Engines and Pumps; Heat Generation and Exchange; Refrigeration; Ventilation; Drying; Temperature and Humidity Regulation; Couplings; Gearing; Fluid Handling and Control; Lubrication.	
GENERAL CONSTRUCTIONS, TEXTILES, MINING AND GEARING, GROUP 350—A. L. SMITH, Director	9-17-80
Building Structures; Racks; Cabinets; Closures; Supports; Furniture; Fasteners; Locks; Pipe Couplings; Joints; Miscellaneous Hardware; Textiles; Sewing Machines; Apparel; Footwear; Earth Engineering; Earth Drilling; Mining; Wells; Roads; Bridges; Tool Driving; Gearing; Machine Elements; Clutches.	

Expiration of patents: The patents within the range of numbers indicated below expire during December 1982, except those which may have expired earlier due to shortened terms under the provisions of Public Law 690, 79th Congress, approved August 8, 1946 (60 Stat. 940) and Public Law 619, 83rd Congress, approved August 23, 1954 (68 Stat. 764), or which may have had their terms curtailed by disclaimer under the provisions of 35 U.S.C. 253. Other patents, issued after the dates of the range of numbers indicated below, may have expired before the full term of 17 years for the same reasons, or have lapsed under the provisions of 35 U.S.C. 151.

Patents .... Numbers 3,221,339 to 3,226,728, inclusive

Plant Patents .... Numbers 2,577 to 2,584 inclusive

REISSUES

FEBRUARY 22, 1983

Matter enclosed in heavy brackets [ ] appears in the original patent but forms no part of this reissue specification; matter printed in italics indicates additions made by reissue.

Re. 31,154
FLEXIBLE DRIVE

James T. Hammond, San Leandro, Calif., and John H. Parks, Peoria, Ill., assignors to Caterpillar Tractor Co., Peoria, Ill.
Original No. 4,121,476, dated Oct. 24, 1978, Ser. No. 797,220, May 16, 1977. Application for reissue Oct. 15, 1979, Ser. No. 85,185

Int. Cl.³ F16H *57/00*; F16D *3/14*

U.S. Cl. 74—411 **12 Claims**

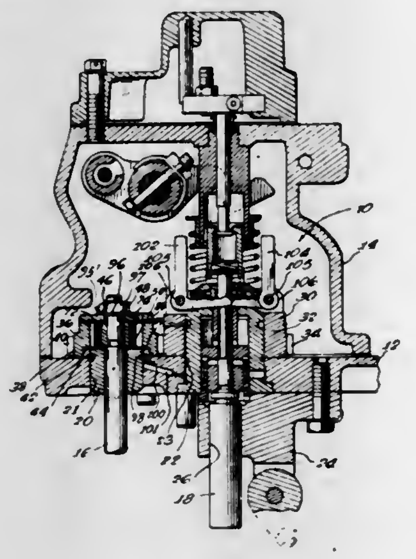

12. In a governor drive having a base, a pair of shafts extending through said base and being disposed parallel to each other, [each] *one* of said shafts having a *first* gear meshing with [each] *a second gear surrounding a portion of the* other *of said shafts, said* one of said shafts being [driven] *a drive shaft* and receiving rotational and vibrational forces from a prime mover, a pair of flyweights [carried] *operatively driven* by the *second* gear on said other shaft, cam [mean] *means* carried by said [driven] *drive* shaft for rotation therewith, elongate spring means seated in said *first* gear on the [driven] *drive* shaft and engaging with a portion of the [opposite sides of] cam means, whereby rotation of said [driven] *drive* shaft will urge said cam means against said spring means to drive said [gear] *first and second gears* and actuate said flyweights.

Re. 31,155
PUMP DOWN SYSTEM FOR PLACING AND RETRIEVING SUBSURFACE WELL EQUIPMENT

Samuel S. Crocker, Houston, Tex., assignor to Schlumberger Technology Corporation, New York, N.Y.
Original No. 3,899,025, dated Aug. 12, 1975, Ser. No. 295,684, Oct. 6, 1972. Continuation-in-part of Ser. No. 243,380, Apr. 4, 1972, Pat. No. 3,799,259. Application for reissue Aug. 6, 1979, Ser. No. 64,333

Int. Cl.³ E21B *7/06*

U.S. Cl. 166—117.5 **22 Claims**

1. A segmented assembly for handling well equipment of the type which is movable through a tubing string for longitudinal engagement with [a] *an open-topped* side pocket recess of a side pocket mandrel comprising:

a. pressure actuated drive means connected with said assembly for driving said assembly through said tubing string in response to pressure applied to said drive means;
b. well equipment handling means connected in said assembly for handling and holding said well equipment;
c. position responsive stopping means in said assembly *operable during downward movement of said assembly in the tubing string* for automatically stopping said assembly at a predetermined location relative to a selected side pocket recess, *said stopping means including outwardly biased latch means having a profile designed to mate with and engage recess means in the tubing string below said selected side pocket recess to thereby automatically terminate said downward movement, said recess means having the same profile as the profile of said latch means*;

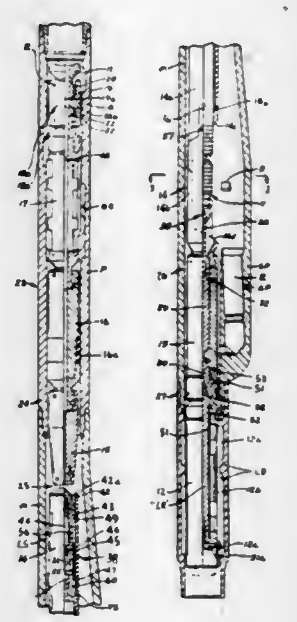

d. orienting means in said assembly for circumferentially orienting said assembly at a predetermined position relative to said side pocket recess; and
e. flexible joint means connecting one end of said handling means to said stopping means and the other end of said handling means to said orienting means whereby said assembly may flex to move through curved [sect-ons] *sections* of said tubing string.

Re. 31,156
ENERGY EFFICIENT PASSENGER VEHICLE

Richard Dessert, 3520 Centinela Ave., #5, Los Angeles, Calif. 90066
Original No. 4,181,188, dated Jan. 1, 1980, Ser. No. 937,503, Aug. 28, 1978. Application for reissue Oct. 17, 1980, Ser. No. 197,931

Int. Cl.³ B60L *11/18*

U.S. Cl. 180—2 A **14 Claims**

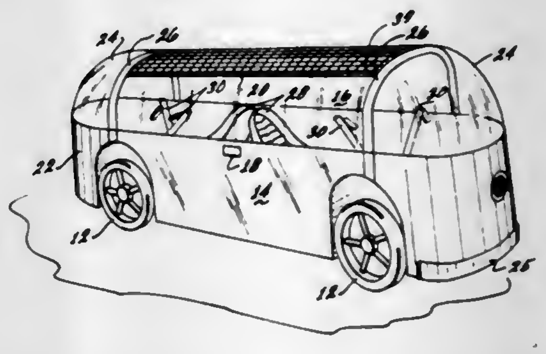

7. An energy efficient electrically powered vehicle which comprises:

an elongated substantially closed body having two spaced supporting wheels at each end;

a power module at each end of said body comprising electrical batteries and electrical drive means adapted to power said wheels;

an elongated solar panel substantially covered with photovoltaic cells located in the roof of said body adapted to generate electricity to charge said batteries; and

means to pivot said solar panel about substantially the panel longitudinal centerline so that said panel may be oriented towards the sun.

Re. 31,157
SELF-FOLDING PLATFORM

William V. Perkins, Marina Del Rey, Calif., assignor to Maxon Industries, Inc., Huntington Park, Calif.

Original No. 4,007,844, dated Feb. 15, 1977, Ser. No. 654,334, Feb. 2, 1976. Application for reissue Feb. 9, 1979, Ser. No. 10,616

Int. Cl.[3] B60P *1/44*

U.S. Cl. 414—545 21 Claims

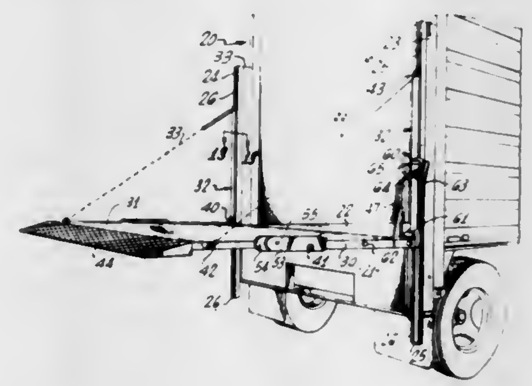

1. A self-folding and unfolding platform lift comprising:

a supporting framework;

a vertically elongate runner assembly mounted on said framework for vertical movement;

an inner platform section having a forward edge horizontally pivotally connected to a lower end of said runner assembly;

an outer platform section having a forward edge connected to a rear edge of said inner platform section by a horizontal hinge means positioned for folding an underside of said outer platform section into superposition over an underside of said inner platform section;

a finite length of a flexible member having one end connected at a rear edge of said outer platform section and another end connected to an upper end of said runner assembly;

whereby when said platform lift is unfolded, said finite length of said flexible member forms a straight line;

means intermediate said inner platform section and said framework to translate vertical movement of said runner assembly into folding or unfolding movement of said inner platform section;

and means [defining a rigid rearward extension of] *extending from the rear of* said inner platform section *defining a bearing in spaced relation to said horizontal hinge means* for [contacting and] seating an intermediate portion of said flexible member for effecting folding or unfolding movement of said outer platform section, relative to said hinge means, as a function of corresponding folding or unfolding movement of said inner platform section.

Re. 31,158
APPARATUS FOR INDICATING UTERINE ACTIVITY IN LABOR

Michael C. Carter, and Philip J. Steer, both of London, England, assignors to National Research Development Corporation, London, England

Original No. 4,114,188, dated Sep. 12, 1978, Ser. No. 757,024, Jan. 5, 1977. Application for reissue Nov. 14, 1979, Ser. No. 94,160

Claims priority, application United Kingdom, Jun. 23, 1976, 26042/76

Int. Cl.[3] G06F *15/42;* A61B *5/04, 5/10*

U.S. Cl. 364—415 20 Claims

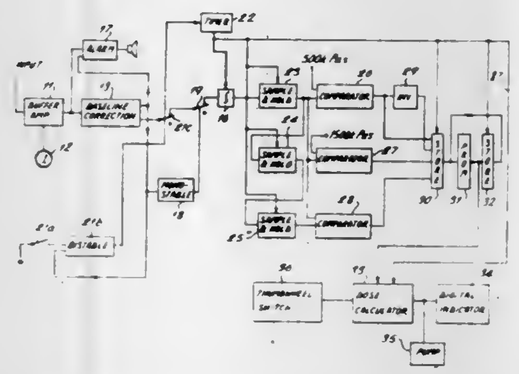

1. Apparatus for indicating uterine activity in labor including:

means adapted to be coupled to a uterine pressure transducer for providing a first signal representative of intrauterine pressure,

means for providing a second signal [which is equal to] *representative of* the first signal except [when a] *during each* contraction [occurs] when [it takes up a value equal to that of] the *value the* first signal *would have had* in the absence of [the] *that* contraction *is represented,*

[means for subtracting the second signal from the first signal, to provide a third signal,] *means for deriving a third signal from the first and second signals, the third signal being representative of the additional uterine pressure, which occurs during contractions, above the uterine pressure existing in the absence of contractions,* and

means for integrating the third signal over intervals of at least ten but not more than thirty minutes to provide an activity signal indicative of uterine activity in labor.

Re. 31,159
FLYING METHOD AND SYSTEM USING TOTAL ENERGY FOR AN AIRCRAFT

Jean-Luc Sicre, Meudon LaForet, France, assignor to Societe Francaise d'Equipement pour la Navigation Aerienne, Velizy-villacoublay, France

Original No. 4,071,893, dated Jan. 31, 1978, Ser. No. 703,006, Jul. 6, 1976. Application for reissue Feb. 29, 1980, Ser. No. 125,879

Int. Cl.[3] G06G *7/78;* B64C *13/50*

U.S. Cl. 364—427 22 Claims

1. A flying method using total [power] *energy,* for an aircraft, and comprising the following steps, governing the aerodynamic [gradient] *flight path angle* γa by reference to a desired [gradient] *flight path angle* γd, obtaining the desired [gradient] *flight path angle* γd by modulating the [total gradient] *potential flight path* γt by the difference between the

aircraft speed V and a reference speed V_2, and displaying an error signal δ representative of the difference between the

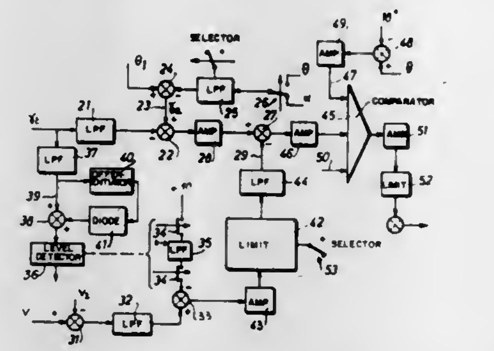

aerodynamic [gradient] *flight path angle* γa and the desired [gradient] *flight path angle* γd.

Re. 31,160
TRACKING CONTROL APPARATUS FOR USE IN APPARATUS FOR REPRODUCING VIDEO SIGNALS FROM A ROTARY RECORDING MEDIUM

Hisao Kinjo, Yokohama, Japan, assignor to Victor Company of Japan, Ltd., Yokohama, Japan

Original No. 4,190,859, dated Feb. 26, 1980, Ser. No. 884,142, Mar. 7, 1978. Application for reissue Jul. 13, 1981, Ser. No. 283,047

Claims priority, application Japan, Mar. 8, 1977, 52-25260

Int. Cl.[3] G11B *21/10*

U.S. Cl. 369—124 6 Claims

1. A tracking control system in a reproducing apparatus having a transducer for reproducing signals recorded on a rotary recording medium in which a main information signal has been recorded in a plurality of adjacent tracks, first and second reference signals having different frequencies, each of said reference signals being alternately recorded at intermediate positions between longitudinal center lines of the adjacent tracks, and a third reference signal being recorded at positions corresponding to a switching of the first and second reference signals, said first, second and third reference signals being in a frequency band which is lower than the frequency band of the main information signal, said tracking control apparatus comprising:

means for controlling the reproducing transducer to correctly track along the main information signal track;

a first separating means for filtering and separating a low frequency band component including at least the first, second and third reference signals from the signal reproduced by the reproducing transducer;

a second separating means for separating the low frequency band component into the first, second and third reference signals;

means for detecting the separated first and second reference signals;

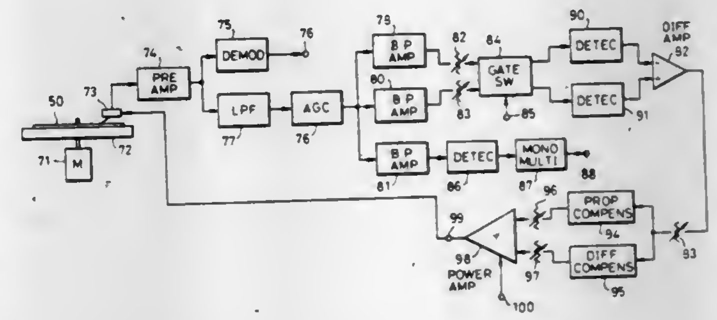

means for selectively switching the separated first and second reference signals responsive to the separated third reference signal, said switched first and second reference signals being applied to the detecting means;

a control signal producing means for producing a control signal in response to the outputs of the detecting means and for applying the control signal to the tracking control means; and

automatic gain control means for bringing the [levels] *total level* of *at least* the separated first[,] *and* second [and third] reference signals to a predetermined level, said automatic gain control means being in a signal transmission path between the first separating means and the control signal producing means.

PLANT PATENTS

GRANTED FEBRUARY 22, 1983

Illustrations for plant patents are usually in color and therefore it is not practicable to reproduce the drawing.

4,984
NECTARINE TREE
Albert A. Boos, 6947 S. Reed Ave., Reedley, Calif. 93654
Filed Aug. 17, 1981, Ser. No. 293,302
Int. Cl.^{3} A01H *5/03*

U.S. Cl. Plt.—41 **1 Claim**

1. A new and distinct variety of nectarine tree, substantially as illustrated and described, particularly characterized in comparison with the Fantasia by fruit in harvest approximately two weeks later, by fruit having a more attractive, waxy, bright red blush color, and by fruit of superior firmness of flesh and toughness of skin.

4,985
PEACH TREE
Claron O. Hesse, Fresno, Calif., assignor to The Regents of the University of California, Berkeley, Calif.
Filed Jul. 27, 1981, Ser. No. 287,534
Int. Cl.^{3} A01H *5/03*

U.S. Cl. Plt.—42 **1 Claim**

1. A new and distinct variety of peach tree, substantially as illustrated and described, characterized by white-flesh, semi-freestone fruit which bears general resemblance to the fruit of the Springtime but ripens approximately three days earlier, is slightly larger in size with a less pronounced tip, and has more red blush color.

PATENTS

GRANTED FEB. 22, 1983

ERRATA

For CLASS	See PATENT NO.
412–003	4,374,441
445–007	4,374,450
445–022	4,374,451
445–066	4,374,452
436–063	4,374,644
420–424	4,374,667
420–507	4,374,668
548–422	4,374,774

PATENTS

GRANTED FEBRUARY 22, 1983

GENERAL AND MECHANICAL

4,374,439
WRIST SUPPORT WITH PALM PAD
Bill Norman, 14431 Galy, Tustin, Calif. 92680
Filed Jan. 5, 1981, Ser. No. 222,655
Int. Cl.³ A41D *19/00*
U.S. Cl. 2—161 A **17 Claims**

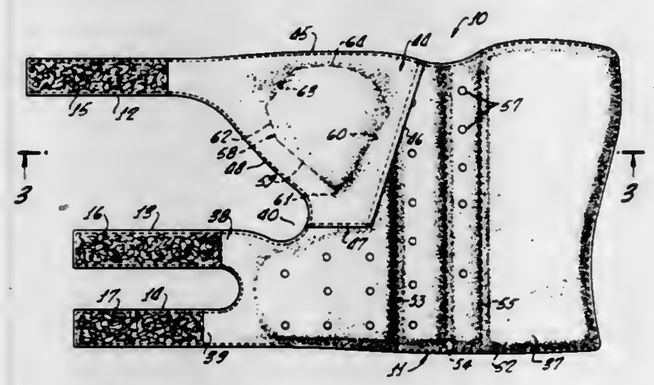

1. A bowling wrist support comprising
a body of flexible sheet material adapted to be wrapped around the hand and wrist,
said body having a first portion positionable over the back of the hand and wrist,
a second portion positionable over the edge of the hand and wrist, and a third portion positionable over the palm of the hand and the inside of the wrist,
means for securing said body in position when so wrapped around a hand and wrist,
said third portion of said body defining a pocket positionable generally at the center of the palm of the hand when said body is so wrapped around the hand and wrist, and
a pad of resilient material in said pocket,
said pad having a lateral dimension sufficiently smaller than that of said pocket to allow said pad to be shifted laterally in said pocket relative to said body for permitting selective locations of said pad relative to the palm of a hand around which said body is so wrapped,
said pad tapering in thickness toward at least one edge thereof, said pocket having an opening providing access to said pad for permitting manual movement of said pad to such selective locations.

4,374,440
HONEYCOMB
Herbert Drapkin, Hidden Hills, Calif., assignor to Perma-Comb Systems, Inc., Woodland Hills, Calif.
Filed Feb. 10, 1981, Ser. No. 233,295
Int. Cl.³ A01K *47/02*
U.S. Cl. 6—10 **20 Claims**

15. A molded plastic honeycomb formed by two substantially identical half sections, and with each half section including
a front face and a back face,
the front face including a plurality of regularly spaced hexagonally shaped cells extending inwardly from the front face and with each cell having a size, shape and configuration substantially equal to the size, shape and configuration of a natural honeycomb cell,
the backface including elongated recesses extending along the top, bottom and side edges of the half section to lighten the weight of the half section and with the top, bottom and sides having substantially flush surfaces and additionally including rib members periodically spaced along the elongated recesses, and
locking portions for providing locking between the back faces of two half sections to produce a single plastic honeycomb from the two half sections and with the plastic

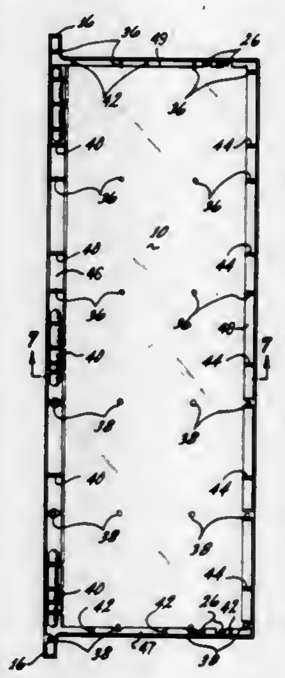

honeycomb having opposite front faces including the cells for the immediate depositing of honey or eggs.

4,374,441
METHOD OF MAKING A BOOK COVER AND POCKET ELEMENT THEREFOR
Leewood C. Carter, Warren; Robin P. Neary, Basking Ridge, both of N.J., and Jay C. Curtis, Wheaton, Ill., assignors to Book Covers, Inc., Newark, N.J.
Filed May 23, 1980, Ser. No. 152,798
Int. Cl.³ B42C *15/00*
U.S. Cl. 412—3 **5 Claims**

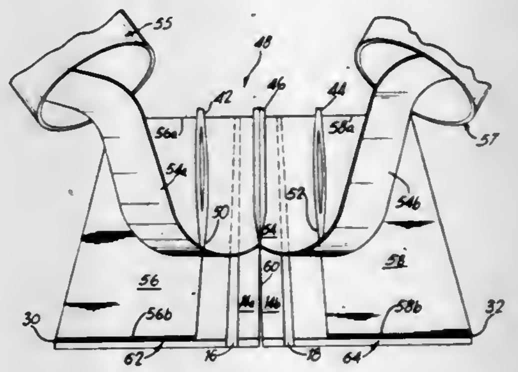

1. A method of making a book cover including a pocket element, comprising the steps of:
supplying a continuous web of cardboard material to a work station, said cardboard material having first and second surfaces, and first and second longitudinally-extending lateral edges on said first surface;
superimposing a continuous web of paper on said first surface;
adhering said first and second lateral edges of said cardboard web and said paper web to form a continuous composite web;
forming spaced-apart, first and second longitudinally-extending slits in said continuous paper web to define first and second pocket elements;
forming a third slit along the center of said cardboard web to separate said composite web into first and second composite sections;

cutting said first and second composite sections in a transverse direction at spaced intervals to form first and second book covers, said first book cover including said first pocket element adhered thereto, and said second book cover including said second pocket element adhered thereto.

4,374,442

EXPANSION JOINT SEALING ASSEMBLY FOR CURB AND ROADWAY INTERSECTIONS

Richard D. Hein, and William L. Fleshood, both of Wabash, Ind., assignors to The General Tire & Rubber Company, Akron, Ohio

Filed Jul. 27, 1981, Ser. No. 287,347

Int. Cl.³ E01D *19/06;* **E01C** *11/02*

U.S. Cl. 14—16.5 **3 Claims**

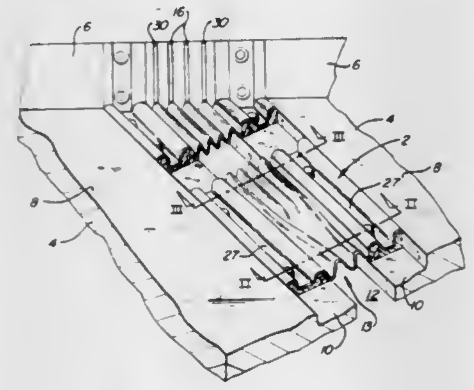

1. An expansion joint sealing assembly for sealing a gap between adjacent deck sections at the intersection of curb and roadway portions of said deck sections, said sealing assembly including a first pair of elongated elastomeric pads designed for placement on said roadway portions of said deck sections along opposite sides of said gap, a second pair of elongated elastomeric pads designed for placement on said curb portions of said deck sections on opposite sides of said gap, an elongated flexible membrane member designed to extend across said gap between both said curb portions and said roadway portions of said deck sections, said flexible membrane member having longitudinally extending side edge portions designed to be secured between said pads and said deck sections, and means to secure said elongated pads to said deck sections with said side edge portions of said membrane member held between said pads and said deck sections, said assembly characterized by the improvement comprising:

(a) said side edge portions of said flexible membrane member each having molded convolutions with laterally extending axes,

(b) each of said convolutions having an upwardly facing first rounded portion with a locking rib projecting upwardly from said first rounded portion, each of said locking ribs extending longitudinally of said membrane member and being separated from adjacent locking ribs by downwardly facing second rounded portions of said convolutions, and

(c) said elongated elastomeric pads each having downwardly facing slots extending longitudinally of the respective pad, said locking ribs on said membrane member fitting within said slots in said elastomeric pads to hold said convoluted side edge portions of said membrane member in place between said pads and said deck sections.

4,374,443

CLEANING MACHINE WITH PARTICULATE ABRASIVE

Carl G. C. Mosell, Casa Spalato No. 2, Sitio de Calahonda, Mijas Costa, Malaga, Spain

PCT No. PCT/SE80/00094, § 371 Date Dec. 2, 1980, § 102(e) Date Dec. 2, 1980, PCT Pub. No. WO80/02105, PCT Pub. Date Oct. 16, 1980

PCT Filed Apr. 1, 1980, Ser. No. 220,071

Claims priority, application European Pat. Off., Apr. 2, 1979, 79850019.5; Sweden, Oct. 9, 1979, 7908348

Int. Cl.³ A47L *15/14, 15/42;* **B08B** *3/02;* **B24C** *7/00*

U.S. Cl. 15—3 **24 Claims**

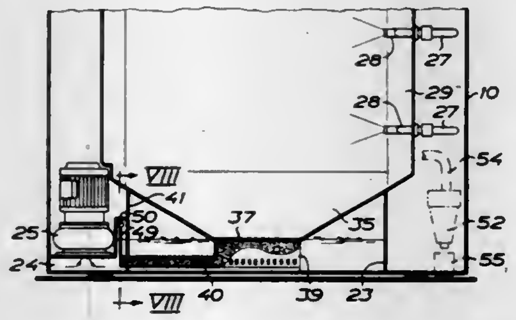

1. In a cleaning machine with means for blasting the goods to be cleaned by means of liquid containing granules, comprising a treatment chamber for receiving the goods; a liquid container; pump means, the suction side of which is connected to the liquid container for sucking-in liquid; nozzle means connected to the pressure side of the pump; means for ejecting liquid towards the goods in the treatment chamber; and means for supplying granules to liquid supplied to the nozzle means, and for separating granules from liquid ejected from the nozzle means; the improvement which comprises as the means for supplying granules to liquid supplied to the nozzle means and separating granules from liquid ejected from the nozzle means, a liquid-permeable compartment which is located inside the liquid container with a bottom outlet in the treatment chamber connecting to the liquid container via the liquid-permeable compartment; said compartment being connected through a valve-controlled opening to the suction side of the pump means for supplying the granules to the liquid through this opening, such that liquid containing the granules is sucked-up and circulated by the pump means, or alternatively retaining the granules in the liquid-permeable compartment such that liquid only is sucked-up and circulated by the pump means, the suction side of the pump means being connected to a suction chamber communicating with the liquid container, into which the valve-controlled opening opens; and a conduit portion of the liquid-permeable container extending through the liquid container from the bottom outlet of the treatment chamber into the suction chamber.

4,374,444

WATER DRIVEN BRUSH FOR CARS AND THE LIKE

Sam Zhadanov, 2944 W. 5th St., Apt. 20 J, Brooklyn, N.Y. 11224

Filed Mar. 9, 1981, Ser. No. 241,592

Int. Cl.³ A46B *13/02*

U.S. Cl. 15—29 **8 Claims**

1. A water brush for cars and the like, comprising
a housing including a generally circular portion;
a water inlet opening for said housing and a water outlet opening for said housing;
a rotor having an axis and mounted within said cylindrical portion of said housing eccentrically with respect to the same, said rotor including a base having a plurality of blades mounted thereon, said blades being so positioned that they are rotated by the force of water exiting said inlet opening, said blades extending substantially radially of said rotor but having a gap between the inner end of each blade and said axis of said rotor providing a means for dissipation of water under pressure thereinto;

a brush member coupled with said rotor for rotation therewith, said eccentric mounting of said rotor providing a steadily increasing spacing between the outer ends of said blades of said rotor and the inner wall of the housing in the area of said generally cylindrical portion; and

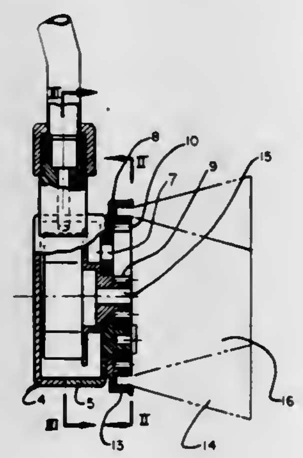

means for preventing the formation of a zone of negative pressure near said axis of said rotor, which zone would form otherwise in the absence of such means.

4,374,445

CLEANING DEVICE FOR USE WITH A DIP STICK

George L. Wilson, Cobourg, Canada, assignor to Michal Kachur, Guelph, Canada

Filed Feb. 24, 1981, Ser. No. 237,581

Claims priority, application Canada, Mar. 27, 1980, 348774

Int. Cl.³ F01M *11/12*

U.S. Cl. 15—210 B **5 Claims**

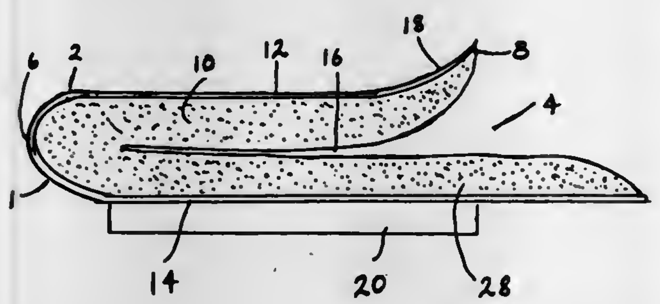

1. A cleaning device for use with a dip stick said device comprising a housing having a substantially U-shaped cross section defining two sides and a base, said housing having an inner surface that is completely covered by a layer of absorbent material said housing having a width in the area of said base substantially equal to twice the depth of the layer of absorbent material so that the absorbent material on each side is in contact in the area of said base, the two sides defining a space between the absorbent material that tapers outwards from the area of the base to an open end of said housing, the housing being made of rigid but flexible and resilient material so that the absorbent material on each side can be pressed together when part of a dip stick is laterally inserted and released to return to its original position after the dip stick has been longitudinally removed, thereby cleaning the dip stick of excess fluid.

4,374,446

VACUUM NOZZLE FOR CARPETED STAIR TREADS AND RISERS

Marcus Copperman, University Heights, Ohio, assignor to Certified Chemical & Equipment Co., Cleveland, Ohio

Filed Apr. 3, 1981, Ser. No. 250,563

Int. Cl.³ A47L *9/06*

U.S. Cl. 15—415 A **7 Claims**

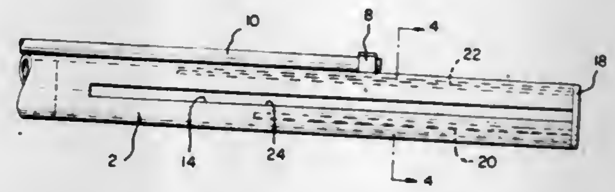

1. A nozzle for cleaning a carpeted stair tread and riser comprising a hollow cylindrical body having a hollow extension in one end for connection to a source of suction, said body having an elongated port in its wall extending from the other end thereof and adjusted to lie against a surface having matter to be removed by said suction, and

valve means cooperating with said body for selectively restricting the axial length of the passageway through said port to the width of a stair tread or a stair riser, said valve means comprising a hollow cylindrical sleeve member which conforms in size and shape to the inner wall of said body and being selectively rotatably mounted therein with a friction fit.

3. A nozzle for cleaning a carpeted stair tread and riser comprising a hollow cylindrical body having a hollow extension in one end for connection to a source of suction, said body having an elongated port in its wall extending from the other end thereof and adjusted to lie against a surface having matter to be removed by said suction, and

valve means cooperating with said body member for selectively restricting the length of the passageway through said port to the width of a stair tread or a stair riser, said valve means comprising a hollow cylindrical sleeve member which conforms in size and shape to the inner wall of said body and is rotatably mounted therewith with a friction fit wherein the wall of said sleeve member is provided with a plurality of slots extending axially from the outer end thereof and which are angularly spaced, said slots being of different lengths, one of said slots corresponding to the length of a stair riser and another of said slots corresponding to the width of a stair tread.

4. A nozzle according to claim 3 including a closure cap secured to the outer end of the cylindrical sleeve member, said cap providing a handle for moving said valve to locate a selected slot in registration with said port in the cylindrical body member.

4,374,447

SIX-WHEEL SPINNING SHIRRING HEAD

Thomas W. Martinek, Covington, Ind., assignor to Teepak, Inc., Chicago, Ill.

Filed Apr. 2, 1980, Ser. No. 136,658

Int. Cl.³ A22C *11/00*

U.S. Cl. 17—1 R **24 Claims**

1. A right angle drive and support assembly for a rotatable element unit comprising a housing, means on said housing for mounting said housing on a supporting head, bearing means within said housing supporting a drive shaft for rotation within said housing, a support shaft carried by said housing, said drive shaft and said support shaft having axes lying in a common plane with said support shaft axis being at a right angle to said drive shaft axis, said support shaft projecting from said housing and having rotatably mounted thereon a rotatable element including a driven gear, a drive gear carried by said drive shaft and mating with said driven gear in driving relation, a mounting collar fixed with said driven gear, a separately formed

shirring wheel, and means for securing said shirring wheel to said mounting collar in angularly adjusted relation, and an anchor pin carried by said housing and extending through said

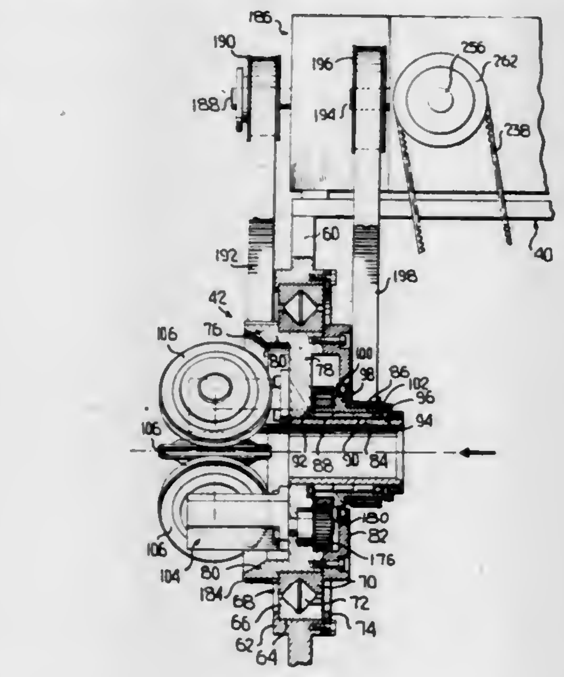

support shaft fixing said support shaft relative to said housing, said anchor pin being coaxial with said drive shaft and said drive shaft having a terminal bore receiving an end of said anchor pin in journalled supported relation.

4,374,448

WEB TAKE-OFF ROLLER ASSEMBLY

Walter Löffler, Schulstrasse 6, 7265 Neubulach 5, Fed. Rep. of Germany

Filed Sep. 25, 1980, Ser. No. 190,564

Claims priority, application Fed. Rep. of Germany, Sep. 29, 1979, 2939693

Int. Cl.³ D01G *15/46*

U.S. Cl. 19—106 R **5 Claims**

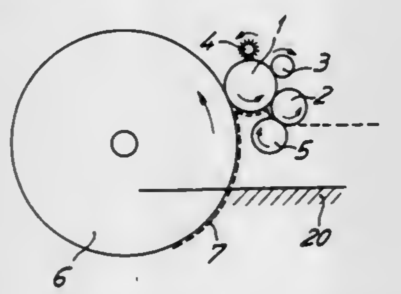

1. An improved web take-off roller assembly for use with carding machines of the type including a take-off roller adjacent a stripping roller and first and second guide rollers, the first guide roller cooperating with the take-off roller, the improvement comprising:

first mounting means for mounting the guide rollers for rotation about their respective axes; and

second mounting means for pivotally mounting said first mounting means and said guide rollers therewith about the axis of the take-off roller so that the guide rollers can be pivoted in unison about the axis of the take-up roller.

4,374,449

MINI SEAT BELT BUCKLE

Robert L. Stephenson, Utica, and Robert C. Pfeiffer, Sterling Heights, both of Mich., assignors to Allied Corporation, Morris Township, Morris County, N.J.

Filed Sep. 25, 1980, Ser. No. 191,058

Int. Cl.³ A44B *11/26*

U.S. Cl. 24—230 AL **10 Claims**

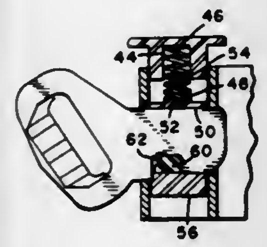

1. A seat belt buckle assembly useful for providing emergency release in a passive seat belt system, said buckle assembly comprising:

a housing formed from a single metal blank having exterior walls, a top and a bottom and an opening extending interiorly of said housing between said top and bottom;

a push button slidably mounted in a first direction within said opening and including an actuating portion extending outwardly of said opening, said button having a latch retaining means located interiorly of said opening in said housing;

latch means in the form of a bar retained in said latch retaining means, said latch means being movable with movement of said push button in a direction parallel to said first direction;

entrance means in an exterior wall of said housing adapted to receive a tongue member;

a tongue member having a recess therein adapted for engagement with said latch means when said tongue member is inserted in said entrance means to lock said assembly; and

slot means in an exterior wall of said housing opposite to said entrance means, the forward edge of said tongue member adapted to extend through said slot means when said tongue member is fully inserted in said housing.

4,374,450

METHOD OF MAKING AN IGNITER PLUG WITH NICKEL COATING ON CENTER ELECTRODE

Gilbert G. Warren, and Colin A. Johnson, both of Sidney, N.Y., assignors to The Bendix Corporation, Southfield, Mich.

Continuation of Ser. No. 45,042, Jun. 4, 1979, abandoned. This application May 4, 1981, Ser. No. 260,456

Int. Cl.³ F23Q *3/70;* H01T *13/20*

U.S. Cl. 445—7 **1 Claim**

1. A method of making an ignitor plug of the type having a cylindrical center electrode of tungsten welded to a center supporting pin of electrically conductive material; an annular electrode surrounding the center electrode and spaced therefrom by an air gap, said annular electrode being comprised of a tungsten alloy in at least a portion thereof proximate the center electrode; and an insulating sleeve intermediate the electrodes, said method characterized by the steps of electroplating with nickel to a thickness of 25 to 75 microns the exposed surface of the center electrode, a portion of the supporting pin adjacent the center electrode and the weld; placing said plated igniter plug in a vacuum chamber having a maximum pressure in said chamber of 1×10^{-4} torr and heating said

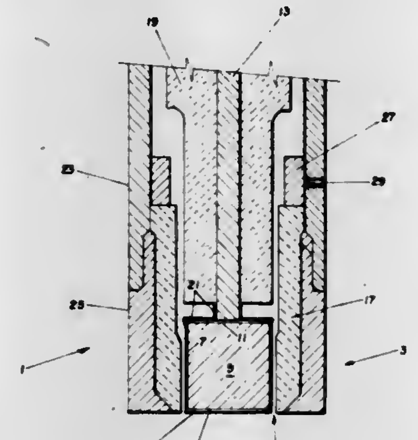

igniter plug while in said chamber to a temperature above 1,000 degrees centigrade.

4,374,451

METHOD OF ASSEMBLING A CRT USING A CODED SUBASSEMBLY OR PART

William R. Miller, Lancaster, Pa., assignor to RCA Corporation, New York, N.Y.

Continuation-in-part of Ser. No. 41,091, May 21, 1979, abandoned. This application Aug. 10, 1981, Ser. No. 291,704

Claims priority, application Taiwan, Feb. 11, 1980, 6910347

Int. Cl.³ H01J *9/20;* B23Q *7/12;* G06F *15/46*

U.S. Cl. 445—22 **8 Claims**

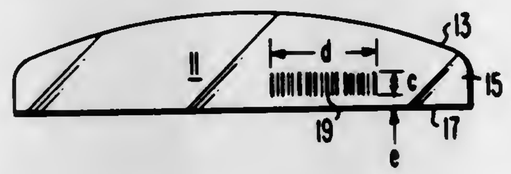

1. In a method of assembling a series of CRTs, each said CRT comprising a plurality of parts assembled with respect to one another, each said CRT including at least one glass envelope part, the steps comprising

(1) advancing a series of said at least one glass envelope parts,

(2) producing in each said parts a unique, optically machine-readable process-survivable coded marking on the external surface thereof,

(3) optically machine-reading each said coded marking,

(4) generating a control signal related to each said coded marking in response to step (3),

(5) in response to each signal, initiating a local process for action with respect to said envelope part and

(6) recording data of said local process with reference to each said coded marking.

4,374,452

APPARATUS FOR MANUFACTURING A COLOR DISPLAY TUBE

Jacob Koorneef, Eindhoven, Netherlands, assignor to U.S. Philips Corporation, New York, N.Y.

Division of Ser. No. 35,951, May 4, 1979, Pat. No. 4,222,159, which is a continuation of Ser. No. 893,939, Apr. 16, 1978, abandoned, which is a continuation of Ser. No. 759,112, Jan. 13, 1977, abandoned. This application Apr. 23, 1980, Ser. No. 142,938

Claims priority, application Netherlands, Jan. 16, 1976, 7600418

Int. Cl.³ H01J *9/00;* B32B *3/24*

U.S. Cl. 445—66 **8 Claims**

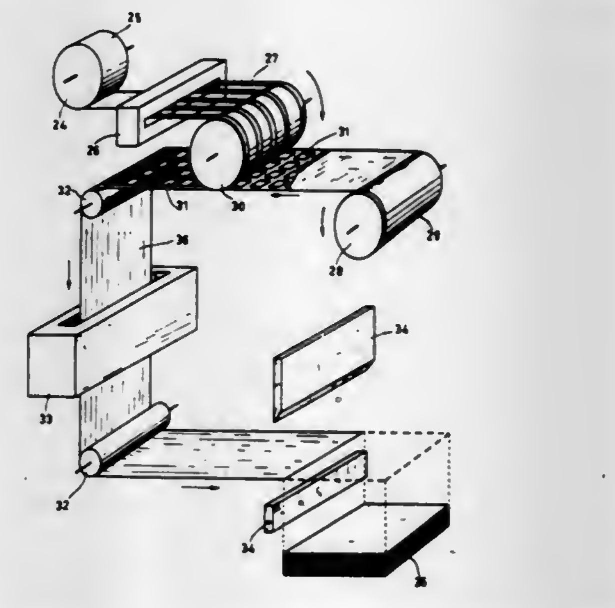

1. An apparatus for fabricating a quadrupole shadow mask from a long metal strip having a mulitiplicity of spaced apertures arranged in a plurality of longitudinally extending substantially parallel spaced rows, said apparatus comprising:

means for storing such a long metal strip and feeding it along a path;

means for supplying a plurality of strips of insulating material of generally the same width as the spacing between said rows and having on at least one side thereof a conductive layer;

means for positioning respective insulating strips adjacent said spaces between said rows, with said at least one side being the side remote from said metal strip, and then applying said insulating strips to said metal strip as said metal strip is fed along said path; and

means for cutting said metal strip with said insulating strips applied thereto into sheets of predetermined length,

CHARACTERIZED IN THAT said positioning and applying means includes a roller for pressing said insulating strips into engagement with said metal strip, said roller being provided with a plurality of circumferential grooves for guiding said insulating strips into registry with said spaces of said metal strip between said rows.

4,374,453

BICYCLE FREEWHEEL WRENCH PRY ADAPTER

Angel L. Rodriguez, 5627 University Way NE., Seattle, Wash. 98105

Filed Jan. 23, 1981, Ser. No. 228,014

Int. Cl.³ B23P *19/00*

U.S. Cl. 29—426.5 **6 Claims**

4. The method of removing a bicycle freewheel from a bicycle wheel with a bicycle freewheel wrench having a wrench-engageable boss with opposite parallel sides and a bore between such parallel boss sides, the axis of which bore is parallel to such parallel boss sides, which method comprises fitting the bore of the bicycle freewheel wrench over a threaded quick-release rod of a bicycle wheel, screwing a

threaded bore in the base of a generally U-shaped wrench pry adapter onto the threaded quick-release rod, engaging the parallel sides of a generally rectangular channel recess in one side of the base of the wrench pry adapter with the opposite parallel sides of the bicycle freewheel wrench boss, and apply-

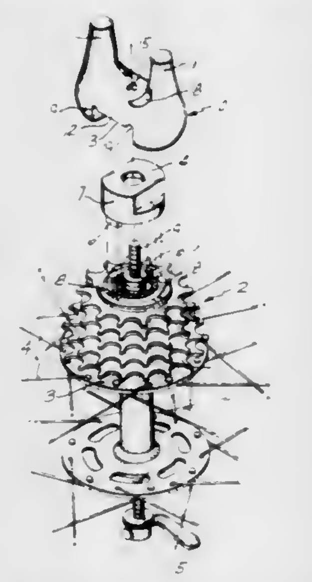

ing a torque to generally parallel legs upstanding from the side of the base of the wrench pry adapter opposite the channel recess, which torque is transmitted by the wrench pry adapter to the wrench-engageable boss of the freewheel wrench and then to the bicycle freewheel.

4,374,454

METHOD OF MANUFACTURING A SEMICONDUCTOR DEVICE

Pieter J. W. Jochems, Eindhoven, Netherlands, assignor to U.S. Philips Corporation, Tarrytown, N.Y.

Filed Dec. 22, 1980, Ser. No. 219,161

Claims priority, application Netherlands, Jun. 23, 1980, 8003612

Int. Cl.³ H01L *21/22*

U.S. Cl. 29—571 **1 Claim**

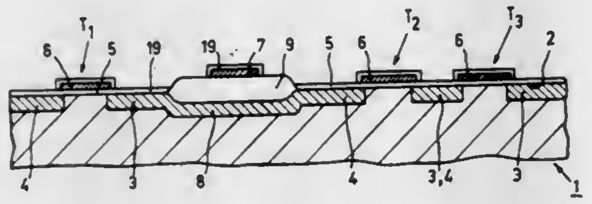

1. A method of manufacturing a semiconductor device having a semiconductor body comprising a surface and a surface-adjoining region substantially of p-type silicon wherein at least two insulated gate field effect transistors are provided whose source and drain zones are formed by n-type surface-adjoining zones and wherein at least one further n-type surface zone is formed that constitutes a conductive connection between one of the source and drain zones of one of the two transistors and one of the source and drain zones of the other of the two transistors, in which method layer portions of a material masking the body against oxidation are provided at the areas intended for the transistors, a doping mask having an aperture at the area intended for the surface zone is provided at the surface, atoms selected from the group consisting of As and Sb are introduced through the aperture into the body, the body is subjected to an oxidation treatment using an oxidation mask comprising the layer portions (1) to obtain an oxide pattern which is sunk at least partly in the body and which extends beside the layer portions and above the surface zone and (2) to cause the As or Sb atoms to diffuse deeper into the body below and adjoining the oxide pattern so as to form the surface zone, insulated gate electrodes for the two transistors are then provided on both sides of and laterally spaced from the surface zone, and the source and drain zones are provided by introducing an impurity selected from the group consisting of P, As and Sb into the body in a self registering manner down to a depth at which the pair of source and drain zones that are connected together adjoin the surface zone below the oxide pattern, characterized in that: prior to the oxidation treatment, hereinafter termed the second oxidation treatment, a first masking layer that consists over at least part of its thickness of a material differing from silicon oxide and masking against oxidation is provided at the areas intended for the surface zone and the transistors and then at least one other oxidation treatment, hereinafter termed the first oxidation treatment, is carried out to obtain a first oxide pattern which is sunk at least partly in body and which has a thickness that makes the first oxide pattern suitable to form part of the doping mask; the doping mask is defined by means of a second masking layer which is provided over the first masking layer and over the first oxide pattern and which covers at least two first parts of the first masking layer at the areas intended for the transistors and which does not cover a second part of the first masking layer and at least a third part of the first oxide pattern adjoining the second part, the aperture coinciding substantially with the location of the second part, the first parts belonging to the oxidation mask; and the second oxidation treatment is carried out after removing at least the material of the second part that masks against oxidation.

4,374,455

METHOD FOR MANUFACTURING A VERTICAL, GROOVED MOSFET

Lawrence A. Goodman, Plainsboro, N.J., assignor to RCA Corporation, New York, N.Y.

Division of Ser. No. 89,315, Oct. 30, 1979, abandoned. This application Feb. 22, 1982, Ser. No. 351,250

Int. Cl.³ H01L *21/22*

U.S. Cl. 29—571 **11 Claims**

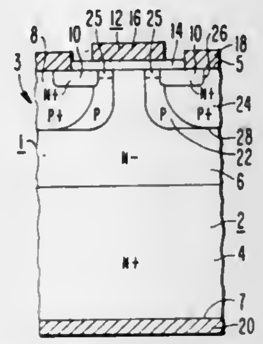

1. A method for fabricating a VMOS device having minimized parasitic bipolar effects, comprising:

providing a semiconductor substrate having first and second opposing major surfaces including therein: a substantially planar first conductivity type drain region at the second surface; a substantially planar first conductivity type extended drain region of lower conductivity than the drain region disposed across the drain region; and a second conductivity type body region adjacent to the extended drain region;

forming a first conductivity type source region extending from the first surface within the boundaries of the body region;

forming a two layer structure over the source region, said structure comprising a secondary mask layer over a primary mask layer;

forming a pair of relatively high conductivity body regions, of lower conductivity than the source region, in those areas not covered with the two layer structure, said relatively high conductivity body regions extending from the first surface to approximately the same depth as the lower conductivity body region and diffusing laterally beneath the two layer structure a predetermined distance;

undercutting the secondary mask layer a distance greater than said lateral diffusion distance so as to yield the secondary mask layer overhanging the primary mask layer;

stripping the secondary mask layer;

forming a third mask layer in areas not covered by the primary mask layer;

stripping the primary mask layer;

forming a groove in the area not masked by the third mask layer, so as to expose the relatively low conductivity body; and

forming a gate oxide on the exposed body region in the groove, a gate electrode on the gate oxide, a drain electrode on the drain region at the second surface, and a source electrode on the source region and relatively high conductivity body regions at the first surface.

4,374,456

PROCESS FOR PRODUCING A GAS DETECTING ELEMENT

Akio Takami; Thutomu Saito, and Kazutoshi Tanaka, all of Nagoya, Japan, assignors to NGK Spark Plug Co., Ltd., Aichi, Japan

Division of Ser. No. 139,626, Apr. 14, 1980, Pat. No. 4,328,477. This application Aug. 19, 1981, Ser. No. 294,122

Claims priority, application Japan, Apr. 12, 1979, 54-45186

Int. Cl.³ H01G *9/00*

U.S. Cl. 29—588 **8 Claims**

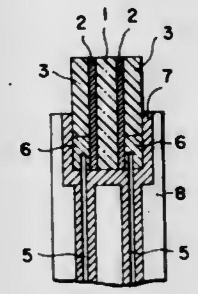

1. A process for producing a gas detecting element comprising the steps of: bonding electrode layers to both sides of a porous semiconductor wafer comprising primarily a transition-metal oxide, disposing a protective layer on the entire surface of said electrode layers except for regions where a metal lead wire is to be coupled to said electrode layers, dividing the wafer into individual unit wafers, heating said wafers for a predetermined time period at a predetermined temperature, coupling a metal lead wire to the surface of each said electrode layer in each said regions with an electrically conductive adhesive, and covering each said region with a reinforcing insulating material.

4,374,457

METHOD OF FABRICATING COMPLEX MICRO-CIRCUIT BOARDS AND SUBSTRATES

Raymond E. Wiech, Jr., 4659 Pescadero Ave., San Diego, Calif. 92107

Filed Aug. 4, 1980, Ser. No. 174,929

Int. Cl.³ H01L *23/36, 23/52;* **C04B** *33/32, 41/14*

U.S. Cl. 29—591 **28 Claims**

1. A method of making a substrate comprising the steps of:

(a) providing a homogeneous composition formed of particulate material and binder,

(b) molding said composition to a predetermined shape having a planar surface having portions on said surface wherein heat producing elements will be secured,

(c) forming a continuous heat sink aperture region of predetermined geometry in said shape in a plane below the said surface of said shape and adjacent the said portions wherein heat producing elements will be secured, said aperture region extending to at least one surface of said shape,

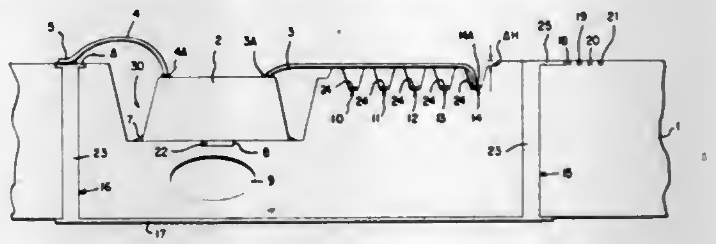

(d) removing at least a portion of said binder, and

(e) sintering said shape after said binder removal.

4,374,458

METHOD OF CONNECTING A CO-AXIAL CABLE TO A CONNECTOR

Hitoshi Komada, 28-3, Oaza Saito Aza Shimoiseji, Fuso-cho, Niwa-gun, Aichi-ken, Japan

Continuation of Ser. No. 41,298, May 22, 1979. This application Jan. 6, 1981, Ser. No. 222,941

Claims priority, application Japan, Jun. 13, 1978, 53-71657

Int. Cl.³ H01R *43/00*

U.S. Cl. 29—857 **3 Claims**

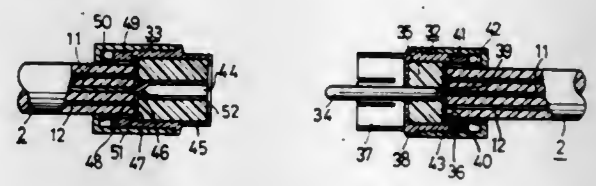

1. A method of connecting a coaxial cable having an outer circumferential ground shield and a central conductor to an electrical connector such as a phone plug or jack having a plurality of electrodes integrally secured therein and insulated from each other, said method comprising the steps of:

severing across the entire end of said coaxial cable smoothly normal to the longitudinal axis thereof to provide a single flat end face thereon and exposing only the end faces of said shield and central conductor;

axially moving said single severed flat end of said coaxial cable into contact with said electrical connector;

forcibly connecting said electrodes axially with the inner conductor and outer shield end faces exposed on said flat severed end of said coaxial cable; and

concurrently tightly securing the body of said coaxial cable to said electrical connector.

4,374,459

CLASSIFICATION INSTRUMENT

Clark R. Burton, Los Altos, Calif., assignor to Compair, Inc., Burlingame, Calif.

Filed Mar. 25, 1980, Ser. No. 133,949

Int. Cl.³ G01B *5/20, 7/28*

U.S. Cl. 33—174 C **18 Claims**

1. A classification instrument for accurately measuring open flow area between two vane elements having mounting buttresses at either end, comprising

support means,

a precision jig in said support means adapted to receive and accurately position both the first vane element and its buttresses,

movable probes arranged upon the support means for accurately monitoring respectively the location of a trailing edge of the first vane element, the location of a convex airfoil surface of the first vane element, spacing between the buttresses as an indication of effective vane element length, and the effective thickness of the vane element,

indicating means carried by said support means and inter-

connected with the respective movable probes for indicating values monitored by the movable probes, and
a further set of movable probes for spaced apart engagement

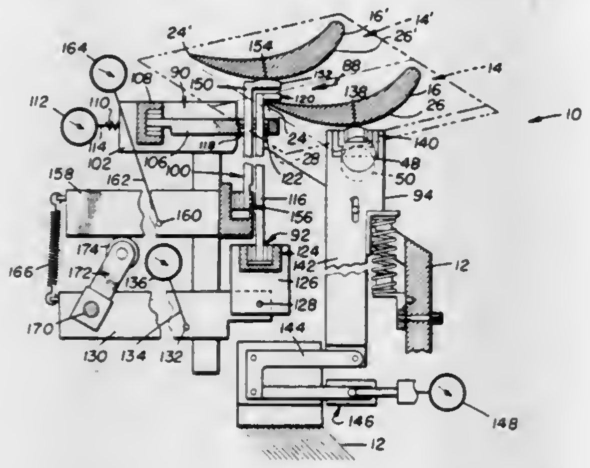

with a convex airfoil surface of the additional vane element, and indicating means being interconnected with the further set of movable probes in order to provide an indication of open flow area between the vane elements.

4,374,460
ANTI-STATIC SHOE SOLE
Marvin S. Towsend, 1365 Potomac Hts. Dr., Fort Washington, Md. 20744
Filed Aug. 11, 1981, Ser. No. 291,922
Int. Cl.³ A43B *13/12, 13/22;* A43D *9/00*
U.S. Cl. 36—30 R **9 Claims**

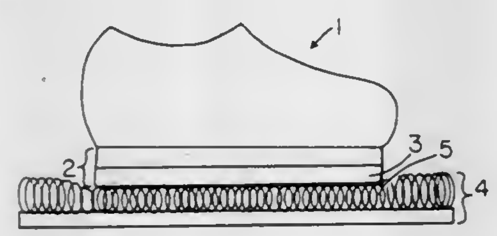

1. An anti-static shoe sole for use on the surface of a floor covering, said sole having a bottom portion having a coating made from substantially the same material as the surface of the floor covering, thereby preventing the build up of static electric charges between said sole and the floor covering when said sole with said coating is used on the surface of the floor covering.

4,374,461
METHOD OF CONSTRUCTING TIRE AND IDENTIFICATION TAG THEREFOR
Alan E. Cohn, Akron, Ohio, assignor to The Goodyear Tire & Rubber Company, Akron, Ohio
Division of Ser. No. 205,139, Nov. 10, 1980, Pat. No. 4,351,548. This application Oct. 23, 1981, Ser. No. 313,930
Int. Cl.³ G09F *3/00, 3/14*
U.S. Cl. 40—2 R **3 Claims**

1. A heat-curable rubber composition identified by a paper identification tag releasably attached to said composition, said tag having a surface area of one of its two sides in the range of about 2 to about 30, preferably about 5 to about 16 square inches (in²) and having an information-providing ink composition thereon which covers about 10 to about 50, preferably about 20 to about 40 percent of the surface area of at least one side of said tag where said ink composition contains about 5 to about 25, preferably about 8 to about 15 weight percent, based on the total ink composition, of a heat activatable blowing agent.

4,374,462
DECONTAMINATION APPARATUS
Thaddeus A. Wojcik, Salem Township, Westmoreland County; Richard M. Kobuck, Delmont, and Ronald F. Antol, North Huntingdon, all of Pa., assignors to Westinghouse Electric Corp., Pittsburgh, Pa.
Filed Aug. 2, 1979, Ser. No. 63,324
Int. Cl.³ B24C *3/32*
U.S. Cl. 51—411 **4 Claims**

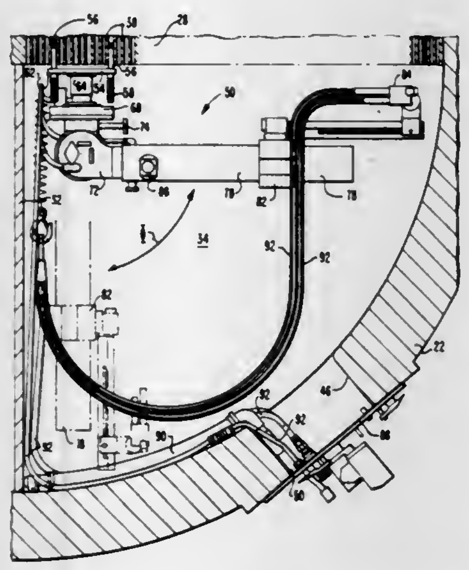

1. Decontamination apparatus for decontaminating radioactive nuclear steam generators comprising:
an attachment mechanism attached to a tube sheet of said nuclear steam generator for completely suspending said decontamination apparatus therefrom;
a first support member attached to the under side of said attachment mechanism;
a harmonic first drive mechanism attached to said first support member for rotating said decontamination apparatus in a horizontal plane parallel to said tube sheet;
a harmonic second drive mechanism attached to said first drive mechanism for rotating said decontamination apparatus in a plane substantially perpendicular to the plane of said tube sheet;
a support arm attached to said second drive mechanism;
a nozzle support mounted on said support arm;
at least two nozzles mounted on said nozzle support and arranged at between approximately 30° to 70° from the center line of said support arm;
a chain and sprocket third drive mechanism disposed in said support arm and attached to said nozzle support for moving said nozzle support and said nozzles in a direction along said support arm, said drive mechanisms providing a means of locating said nozzles near the various surfaces of said nuclear steam generator while maintaining said nozzles approximately 6 to 10 inches from said surfaces; and
water-grit supply means connected to said nozzles for supplying a water-grit mixture to said nozzles at a pressure between approximately 200 psi and 2700 psi and with said water grit-mixture having a grit concentration of approximately 3% to 7% by weight, said nozzles directing said water-grit mixture toward the surface of said nuclear steam generator and thus decontaminating said nuclear steam generator.

4,374,463
APPARATUS FOR PROCESSING SHEET LIKE MATERIALS
Hideo Omura, and Shigeo Horino, both of Tokyo, Japan, assignors to Tokyo Shibaura Denki Kabushiki Kaisha, Kawasaki, Japan
Filed Jun. 24, 1980, Ser. No. 162,485
Claims priority, application Japan, Jun. 29, 1979, 54-81460
Int. Cl.³ B65B *13/06, 27/08*
U.S. Cl. 53—54 **8 Claims**

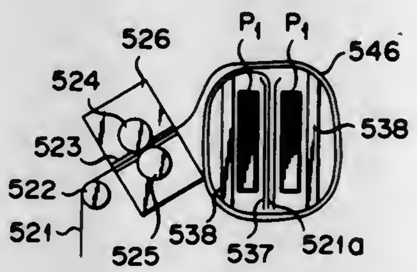

1. An apparatus for processing sheet like materials, comprising:
a unit sheet-stack transfer mechanism for (a) receiving at a first position a unit sheet-stack as a stack of a predetermined number of sheets of sheet like materials, the respective sheet like materials being postured substantially horizontally, and (b) transferring said stack to a second position whereat said respective sheets are postured substantially vertically;
a mechanism for forming a bundling loop for bundling said unit sheet-stack by winding into a loop a free end portion of a tape fed from a tape feeding source; and
a bundling mechanism having means for inserting said unit sheet-stack into said bundling loop while said respective sheets thereof are postured in said substantially vertical state, means for tightening said bundling loop to squeeze said inserted unit sheet-stack, and means for bonding an outer end portion of said bundling loop tightened to an outer periphery portion of said bundling loop, wherein said bundling loop forming mechanism comprises:
first and second guide plates disposed at predetermined positions for guiding said unit sheet-stack when said unit sheet-stack is inserted into said bundling loop
third and fourth guide plates arranged between said first and second guide plates and in parallel therewith, for guiding said free tape end;
rollers for feeding said free tape end between said third and fourth guide plates; and
means for rotating said first to fourth guide plates in respective predetermined directions to thereby form said loop.

4,374,464
CORK MOUNTING APPARATUS
Bengt S. R. Tillander, Fröslunda, 190 70 Fjärdhundra, Sweden
Filed Sep. 5, 1980, Ser. No. 184,372
Claims priority, application Sweden, Sep. 5, 1979, 7907374
Int. Cl.³ B67B *1/04, 5/00;* B65B *67/00*
U.S. Cl. 53—324 **10 Claims**

1. A cork mounting apparatus for bottles comprising two cooperating parts, the cooperating parts including a lower part and an upper part axially movable relative to one another, a top of the lower part including an internal socket having a lower edge adapted to press against a top of a bottle-neck for guiding a cork, a movable piston connected with the upper part and arranged to urge the cork through said socket, the lower part including a surrounding tube which at least partially serves as a holder for the lower part, the piston being connected with an outer tube of the upper part which outer tube surrounds an

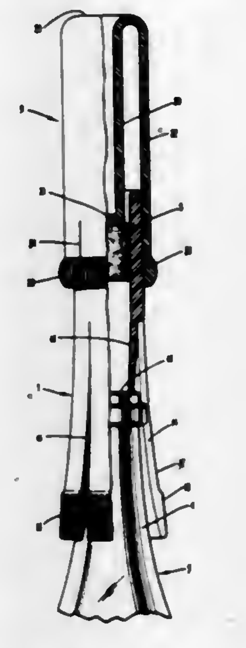

outer wall of the lower part and provides a centering arrangement for the piston and the socket.

4,374,465
ATTACHMENT FOR ROTARY LAWN MOWER
Robert C. Comer, Hopkins, Minn., assignor to The Toro Company, Minneapolis, Minn.
Filed Feb. 2, 1982, Ser. No. 344,910
Int. Cl.³ A01D *55/18*
U.S. Cl. 56—12.7 **10 Claims**

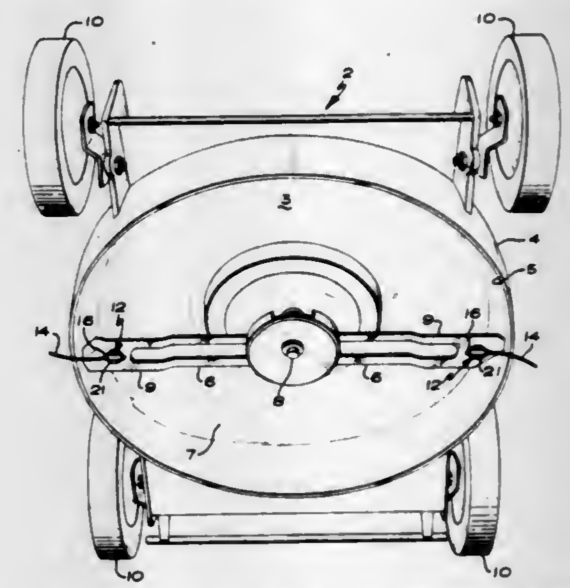

1. A rotary lawn mower of a type having a housing that includes a cutting chamber bounded by downwardly depending side walls having a lower edge; means for supporting said housing for movement over a ground surface at a selected height thereabove; a substantially rigid cutting blade located within said cutting chamber, wherein said cutting blade has a top side and a bottom side and at least one sharpened cutting edge; and means in said housing for rotating said blade in a substantially horizontal cutting plane such that said cutting edge severs standing vegetation; wherein the improvement relates to a trimming attachment for said blade, which comprises:
(a) a filament holder;
(b) means for selectively and releasably mounting said holder in said blade; and
(c) a flexible filament contained in said holder, which filament extends radially outwardly relative to said blade and is sufficiently long to extend out past the side walls of said housing when said holder is mounted on said blade,

whereby said filament can be used to trim vegetation outside said housing by selectively coupling said filament holder to said blade.

4,374,466
GAS TURBINE ENGINE
Arthur Sotheran, Bristol, England, assignor to Rolls Royce Limited, London, England
Filed Mar. 5, 1980, Ser. No. 127,501
Claims priority, application United Kingdom, Mar. 8, 1979, 7908290
Int. Cl.³ F23R *3/32, 3/18*
U.S. Cl. 60—39.36 5 Claims

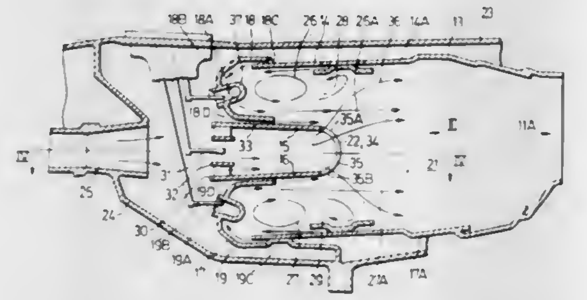

1. A gas turbine engine comprising an air compressor, a combustion chamber comprising a pre-mixing section arranged to receive air flow from the compressor and having spaced apart walls, means for discharging fuel into the pre-mixing section thereby to creat an air-fuel mixture therein, a main section arranged downstream of the pre-mixing section, an array of baffles arranged in spaced-apart pairs, the two baffles of each pair having a common portion from which the two baffles diverge in the direction from the pre-mixing to the main section, adjacent said pairs being spaced apart to define flow passages therebetween, and cooling air duct means having inlets arranged to receive air flow from said compressor but being clear of any fuel supply and having outlets directed into a space defined between the baffles of each said pair of baffles thereby to cool the surfaces of the baffles facing the main section.

4,374,467
TEMPERATURE CONDITIONING SYSTEM SUITABLE FOR USE WITH A SOLAR ENERGY COLLECTION AND STORAGE APPARATUS OR A LOW TEMPERATURE ENERGY SOURCE
Patrick B. Briley, Tulsa, Okla., assignor to Hybrid Energy, Inc., Stillwater, Okla.
Continuation-in-part of Ser. No. 948,043, Oct. 2, 1978, abandoned, and a continuation of Ser. No. 55,524, Jul. 9, 1979, Pat. No. 4,248,049. This application Oct. 14, 1980, Ser. No. 196,864
Int. Cl.³ F25B *27/02*
U.S. Cl. 62—238.1 19 Claims

1. A temperature conditioning system comprising:
a drive pump for pumping a refrigerant having an inlet portion and an outlet portion;
a drive evaporator connected in a heat exchanging relationship with a heat source, the drive evaporator having an inlet portion and an outlet portion, the inlet portion being connected to the outlet portion of the drive pump;
an ejector having a drive inlet portion connected to the outlet portion of the drive evaporator a suction inlet portion, a mixing portion in fluid communication with the drive and suction inlet portions, and a diffuser portion in fluid communication with the mixing portion;
a condenser connected in a heat exchanging relationship with a heat sink, the condenser having an inlet portion and an outlet portion, the inlet portion being connected to the diffuser portion of the ejector and the outlet portion being in fluid communication with the inlet portion of the drive pump;
a load evaporator connected in a heat exchanging relationship with a second heat source, the load evaporator having an inlet portion and an outlet portion, the inlet portion being in fluid communication with the outlet portion of

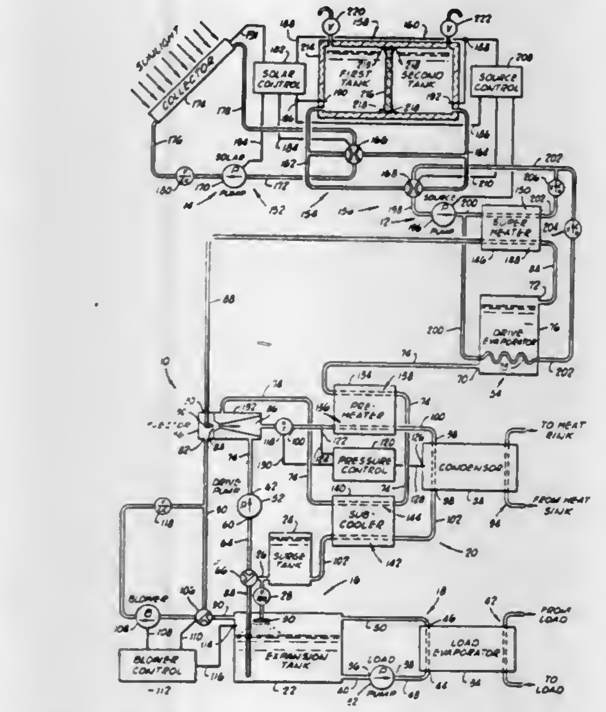

the condenser and the outlet portion being connected to the suction inlet portion of the ejector; and
a conduit for conveying a refrigerant which has been cooled by the condenser in a heat exchanging relationship with a refrigerant in the ejector such that the refrigerant in the ejector is cooled.

4,374,468
ABSORPTION TYPE REFRIGERATION SYSTEM INCLUDING COMPRESSOR DRIVEN AUXILIARY FLOW CIRCUITS ISOLATED FROM MAIN CIRCUIT
Isao Takeshita, Neyagawa, and Shiro Hozumi, Sakai, both of Japan, assignors to Matsushita Electric Industrial Company, Kadoma, Japan
Filed Mar. 10, 1981, Ser. No. 242,193
Claims priority, application Japan, Mar. 18, 1980, 55-35017; Nov. 19, 1980, 55-163629
Int. Cl.³ F25D *17/00*
U.S. Cl. 62—333 8 Claims

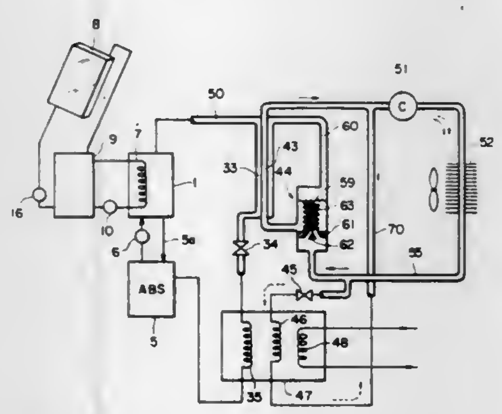

1. A refrigeration system comprising:
a main closed loop working-fluid flow circuit including a refrigerant generator, condenser, an evaporator and an absorber, all of which are connected in series in said flow circuit;
a first auxiliary closed loop refrigerant flow circuit including a compressor, a condenser and an evaporator, all of which are connected in series in the last-mentioned flow circuit, the evaporator of the auxiliary flow circuit being arranged to cool the condenser of said main flow circuit, said auxiliary flow circuit further including means for controlling the pressure of said auxiliary flow circuit evaporator as a function of the pressure in said refrigerant generator; and
a second auxiliary refrigerant flow circuit connected in parallel with the first auxiliary flow circuit, said second auxiliary flow circuit including an evaporator located adjacent to the main flow circuit evaporator, said pressure controlling means comprising a valve for routing the refrigerant from said compressor to the evaporator of said second auxiliary flow circuit when the pressure in said refrigerant generator falls below a predetermined value.

4,374,469
VARIABLE CAPACITY AIR CYCLE REFRIGERATION SYSTEM
George C. Rannenberg, Canton, Conn., assignor to United Technologies Corporation, Hartford, Conn.
Filed Dec. 24, 1980, Ser. No. 219,612
Int. Cl.³ F25D *9/00*
U.S. Cl. 62—402 4 Claims

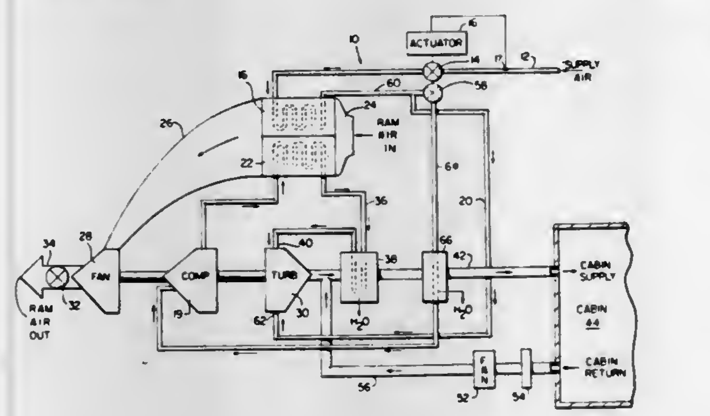

1. An air cycle refrigeration system for supplying conditioned air to an enclosure said system comprising a compressor for increasing the pressure of supply airflow thereto, discharge airflow from said compressor being fed to a turbine through a primary nozzle thereof, said compressor discharge airflow driving said turbine and being expanded, and cooled thereby and discharged therefrom, means for delivering said turbine discharge air to said enclosure, said turbine and compressor being mechanically interconnected whereby said turbine provides a measure of input power for driving said compressor, said air cycle refrigeration system being characterized by means channeling an additional portion of said supply air to said turbine through a second nozzle thereof, thereby bypassing said compressor, and means for regulating the flow of said compressor bypass airflow to said turbine, in response to the amount of available supply airflow, said compressor bypass air, with said compressor discharge air, being expanded by said turbine for enhancing the flow capacity and output of said system without adversely affecting compressor efficiency.

4,374,470
GEM RING WITH INTERCHANGEABLE SETTINGS
E. Arnold Isaacson, 4033 Milky Way, Salt Lake City, Utah 84117
Filed Feb. 17, 1981, Ser. No. 234,736
Int. Cl.³ A44C *17/04*
U.S. Cl. 63—29 R 6 Claims

1. A finger ring comprising
a mounting having an opening through the front thereof;
closure means fixed to the inside of the mounting and adapted to extend across the opening;
latch means to hold the closure means in position across said opening;
a replaceable insert unit adapted to fit in the opening and to be held in place by the closure means and the latch means, said insert unit including a setting projecting through the opening to the outer surface of the mounting, a crown in which the setting is inserted, the points of the crown being bent over the setting to hold the setting in the crown; and

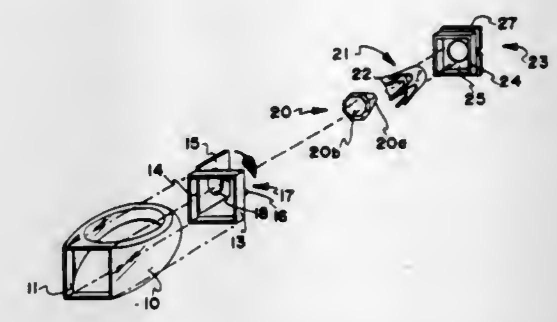

a casing in which the setting and crown are positioned, said casing including a setting edge guard projecting through the opening and around the setting.

4,374,471
PLANT FOR TRANSFERRING YARN HANKS ALONG A PATH PASSING THROUGH A TREATING UNIT
Federico Minnetti, Pieve a Nievole, Italy, assignor to Officine Minnetti di Ornella Raveggi & C.S.a.s., Pieve a Nievole, Italy
Filed Sep. 26, 1980, Ser. No. 191,341
Int. Cl.³ D06B *15/02*
U.S. Cl. 68—245 18 Claims

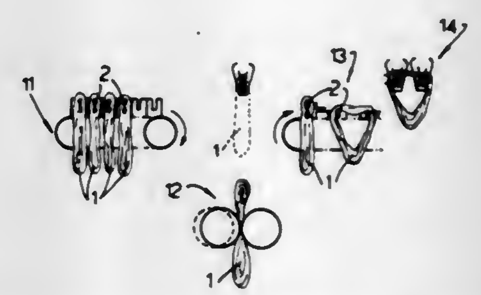

1. A plant for squeezing hank yarns, the hanks being carried on sticks, said plant comprising means for conveying the hanks carried on sticks to a squeezing unit, a squeezing unit for squeezing the hanks, and means for removing squeezed hanks from the squeezing unit, characterized in that said means for conveying comprises a chain feeder having two parallel chains formed of interconnected plates, and two parallel chain members formed with plate elements secured to the plates of said chains, each element having an outwardly open notch or cutout, such a notch or cutout being of such dimensions as to receive two overlapped approached parallel hank holding sticks.

4,374,472
VIBRATION SENSOR
Toshifumi Nishimura, Yokosuka, Japan, assignor to Nissan Motor Co., Ltd., Yokohama, Japan
Filed Sep. 24, 1980, Ser. No. 190,284
Claims priority, application Japan, Sep. 29, 1979, 54-126056; Sep. 29, 1979, 54-126057; Dec. 7, 1979, 54-169360[U]; Dec. 27, 1979, 54-171624; Dec. 27, 1979, 54-185091[U]; Feb. 29, 1980, 55-25988[U]
Int. Cl.³ G01L *23/22*
U.S. Cl. 73—35 52 Claims

1. A vibration sensor comprising:
a housing having means for attaching said sensor to a vibrating source;
a vibrator including a piezoelectric element having an electrically conductive member on both plane surfaces thereof to form electrodes thereon and a metal plate made from a metal having a thermal expansion ratio approximately the same as

that of said piezoelectric element, said piezoelectric element being responsive to vibration applied thereto and generating

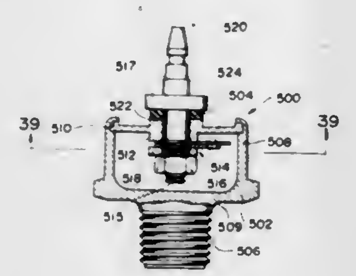

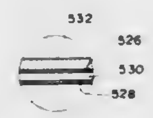

an electric signal having potential corresponding to the magnitude of sensed vibration; and
a threaded fastener mounting said vibrator to said housing.

4,374,473
CABLE TESTING SYSTEM
Thomas H. Brockman, 622 Ponce DeLeon, Pass Christian, Miss. 39571
Filed Apr. 16, 1981, Ser. No. 254,697
Int. Cl.^{3} G01L *5/06;* **B66C** *1/12*
U.S. Cl. 73—158 **3 Claims**

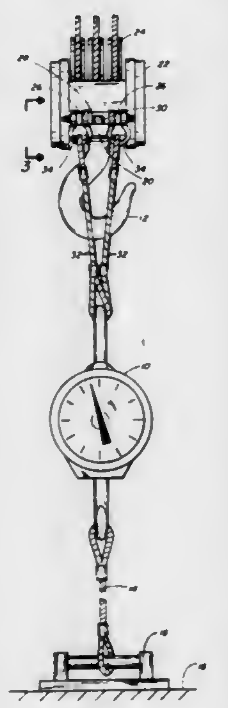

1. A crane system for testing a cable comprising:
a weight indicator system;
means for suspending said weight indicator system directly from a crane lifting block, bypassing a crane hook, such that said weight indicator will not spin relative to said crane lifting block; and
a dead man in the ground such that said cable is attached between said weight indicator system and said dead man when being tested.

4,374,474
PRESSURIZED DENSITY MEASURING APPARATUS
David E. Cain, Houston, Tex., assignor to Halliburton Company, Duncan, Okla.
Filed Mar. 9, 1981, Ser. No. 242,024
Int. Cl.^{3} G01N *9/04*
U.S. Cl. 73—433 **29 Claims**

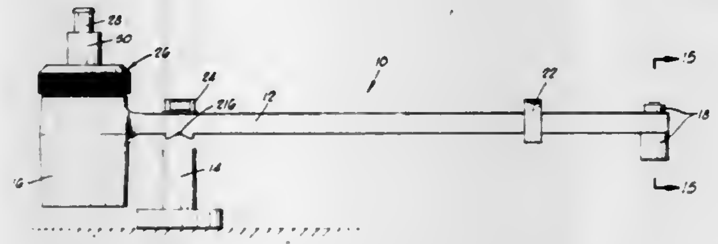

1. An apparatus for measuring density of a fluid in a pressurized state, comprising:
a balance arm;
a fulcrum means for supporting said balance arm;
a balance weight slidably disposed on said balance arm;
a pressurizable container means, disposed on said balance arm, for holding said fluid;
valve means, connected to said container means, for allowing pressurized fluid to flow into said container means and for retaining said fluid in said container means under pressure; and
pump means for supplying said pressurized fluid to said valve means, said pump means including:
a pump body having a cylindrical bore disposed therein and an outlet port means for communicating said bore with said valve means; and
a rotatable piston member means, threadedly engaged with said pump body, for pressurizing fluid contained in said bore upon rotation of said piston member means relative to said pump body, said pump body and said rotatable piston member means being so arranged and constructed that said fluid is maintained in a pressurized state when effort to rotate said rotatable piston member means is released.

4,374,475
DIFFERENTIAL PRESSURE GAUGE
John Hestich, Glendora, Calif., assignor to Dwyer Instruments, Inc., Michigan City, Ind.
Filed Feb. 9, 1981, Ser. No. 232,988
Int. Cl.^{3} G01L *7/04*
U.S. Cl. 73—736 **20 Claims**

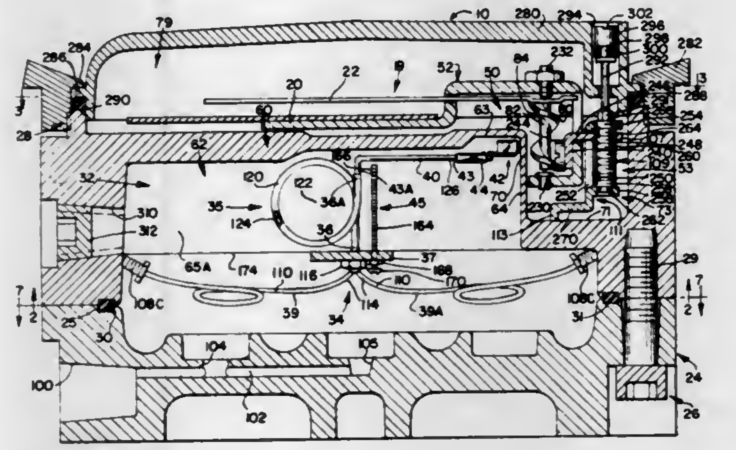

20. In a gauge that includes linear to rotary motion transforming means including a helix journalled for rotation about its longitudinal axis, with the helix having an indicator connected thereto, a magnet for producing rotational movement of said helix about its said axis in response to linear movement of the magnet alongside and lengthwise of said helix axis, and

a housing for the helix and magnet, a zero datum adjacent to which the indicator is disposed, with the housing defining a pressure chamber in which the magnet is mounted, and including sensing means mounted in said pressure chamber for shifting said magnet in a path extending lengthwise of said helix in response to differential pressure changes in said chamber, with the magnet path and the helix axis being in coplanar relation,
the improvement including:
a bourdon tube helically coiled about a rectilinear axis and disposed in said housing pressure chamber spaced from said helix with said magnet disposed between the helix and said tube and said tube axis extending crosswise of said plane of said magnet path and helix axis,
one end of said tube being sealed and mounting a support arm lying in said plane on which the magnet is mounted for movement in said plane,
means for mounting said tube in fixed relation to the housing at the other end of same,
with the other end of said tube being sealed and including means for connecting said tube other end to a first fluid pressure source exterior of the housing,
said tube comprising said sensing means,
and means for connecting the housing pressure chamber to a second fluid pressure source exterior of the housing,
said means for connecting the housing pressure chamber to the second fluid pressure source comprising means for venting same to atmosphere.

4,374,476
VACUUM VAPORIZING METHOD AND APPARATUS
Gregory A. Ford, Bartlesville, Okla., assignor to Phillips Petroleum Company, Bartlesville, Okla.
Filed Nov. 28, 1977, Ser. No. 855,489
Int. Cl.^{3} G01N *31/08*
U.S. Cl. 73—23.1 **8 Claims**

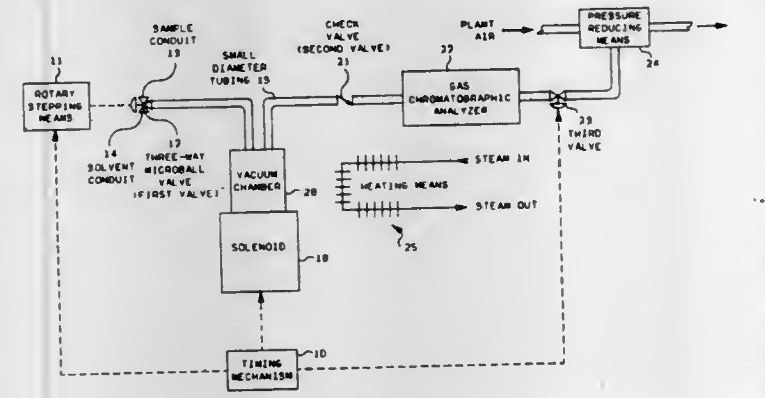

1. An apparatus comprising:
a first valve having a first inlet means in communication with an outlet means only when said first valve is in a first position and a second inlet means in communication with the outlet means only when said first valve is in a second position;
a heatable sealable chamber divided into a first section and a second section by a movable piston positioned within said chamber, wherein the first section of said chamber has one inlet and one outlet, wherein the second section of said chamber is in open communication with the atmosphere, wherein the second section of said chamber contains a spring exerting a force against the piston in the direction of the first section of the chamber when the spring is compressed, wherein an actuator means external to said chamber is attached to said piston which, upon actuation, quickly forces said piston in the direction of the second section of the chamber;
a second valve having an inlet means and an outlet means and which passes a fluid only from the inlet means to the outlet means;
a gas chromatographic analyzer having an inlet means and an outlet means;
a third valve having an inlet means and an outlet means and an open position and a closed position; and
a pressure reducing means;
wherein the outlet means of the first valve is connected to the inlet means of the first section of the chamber;
wherein the inlet means of the second valve is connected to the outlet means of the first section of the chamber;
wherein the inlet means of the gas chromatographic analyzer is connected to the outlet means of the second valve and wherein the outlet means of the gas chromatographic analyzer is connected to the inlet means of the third valve; and
wherein the pressure reducing means is connected to the outlet means of the third valve.

4,374,477
ULTRASONIC MEASURING DEVICE
Akira Kikuchi; Akio Hagiya, both of Tokyo; Kazuteru Shinkai; Masaru Kohno, both of Kawasaki, and Kiyoshi Saito, Tachikawa all of Japan, assignors to Fuji Electric Co., Ltd., Kanagawa, Japan
Filed Mar. 24, 1981, Ser. No. 247,032
Claims priority, application Japan, Mar. 25, 1980, 55-37844
Int. Cl.^{3} G01F *1/66*
U.S. Cl. 73—861.18 **6 Claims**

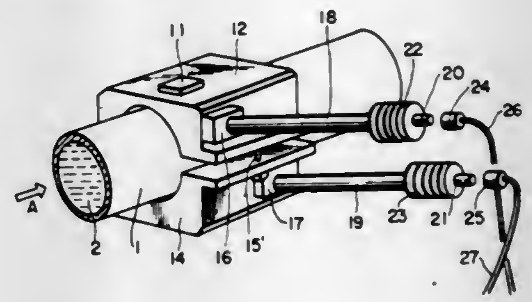

1. An ultrasonic measuring device comprising: two ultrasonic transducers arranged on opposite sides of a pipe in which a fluid to be measured flows, a first of said ultrasonic transducers transmitting an ultrasonic wave towards said fluid and a second of said ultrasonic transducer receiving said ultrasonic wave which has passed through said fluid; a first frame holding said first ultrasonic transducer; a second frame having an end portion holding said second ultrasonic transducer, said first and second frames having end portions hingedly coupled to one another and said first and second frames being mounted on said pipe with said first and second frames clamping said pipe; tightening means for tightening free end portions of said first and second frames together; first and second hollow pipes secured to said first and second frames, respectively; first and second connecting terminals mounted at ends of said first and second hollow pipes, respectively, away from said frames; and lead wires connected at first ends to said two ultrasonic transducers, one of said lead wires being disposed in each of said hollow pipes and being connected at second ends to said connecting terminals.

4,374,478
STORAGE TANKS FOR LIQUIDS
Herbert C. Secord, deceased, late of Siena, Italy, and by Fanny E. P. Secord, executor, London, United Kingdom, assignors to Ocean Phoenix Holdings NV, Curacao, Netherlands Antilles
Filed Jan. 3, 1980, Ser. No. 109,203
Claims priority, application United Kingdom, Jan. 11, 1979, 7900987; Sep. 2, 1979, 7938108
Int. Cl.^{3} G01M *3/00;* **B65D** *90/00, 6/00*
U.S. Cl. 73—863.31 **2 Claims**

1. A land storage tank arrangement for the storage of fluid media under pressure, comprising an internal-pressure-sustaining insulatable tank of generally rectangular cross-section

having a bottom wall, a top wall, two opposite longitudinal side walls and two opposite end walls; each of said bottom and top walls consisting of a multiplicity of equal-sized parallel lobes, and each said side wall consisting of one lobe, the side wall lobes also being equal-sized, all said lobes being of part-cylindrical form and being convex outwardly of the tank with the two inwardly-directly longitudinal edges of each lobe joined to a longitudinal edge of a lobe alongside; and said end walls consisting of a multiplicity of part spherical end wall elements having the same radius of curvature as said lobes and each joined at its inwardly directed edges to end wall elements alongside and to bottom, top and side wall lobes alongside to unite said bottom, top, side and end walls to one another; said insulatable tank further comprising a single series of parallel

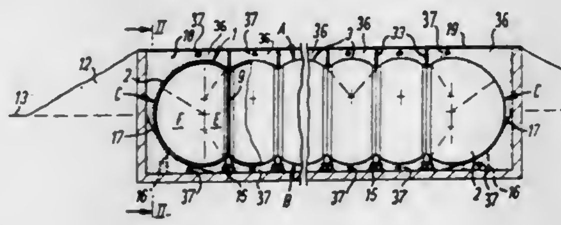

internal reinforcing plates, each plate extending from the joint between two lobes of the bottom wall to the respective opposite joint between two lobes of the top wall and extending longitudinally to the joints of opposed end wall elements to tie the tank end walls to one another longitudinally; said storage tank arrangement further comprising a shallow dyke in which the tank is sited at least partly below ground, said dyke having dyke walls being spaced from the tank by a space filled with a thermal insulating material and an inert gas atmosphere, a substantially flat roof which extends over the tank and is sealed to the dyke walls, and roof support means comprising feet spaced apart on the underside of the rood and sited so as to sit on the joints between adjacent lobes of the top wall or the tank whereby the span or the roof is supported by said insulatable tank.

4,374,479
TORQUE TRANSFER DEVICE FOR WRENCH APPLICATIONS
Peter L. Minotti, Box 75, Easton, Pa. 18042
Filed Dec. 11, 1980, Ser. No. 215,155
Int. Cl.³ B25B *17/00*
U.S. Cl. 81—57.3 **12 Claims**

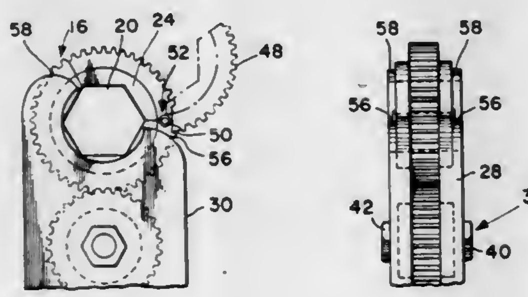

1. A tool for transferring torque from a driving member to a workpiece comprising:

a. a odd numbered plurality of serially engaging identical gears rotatable about parallel axes, each of said gears including coaxial cylindrical shoulders extending outwardly from opposite sides thereof

b. a first gear of said plurality including engagement passageway means matingly engageable with said driving member for rotation of said first gear thereby;

c. a last gear of said plurality including passageway means for engaging said workpiece for rotation thereof by said last gear;

d. side plates sandwiching said plurality of gears therebetween and including cylindrical recesses defining bearing surfaces in respective facing surfaces of said plates, said bearing surfaces being journaled against respective facing surfaces of said gears for running contact therewith during gear rotation, said recesses having depth less than thickness of said plates so that outwardly facing surfaces of said plates present smooth solid faces overlying all of said gears, said side plates having rounded ends overlying first and last gears of said plurality, said rounded ends being formed on radaii slightly larger than respective radaii of said first and last gears of said plurality, said rounded ends being tangent with straight sides of said plates so that teeth of all said gears are within an envelope defined by parallel peripheries of said side plates, said plates including openings overlying the centers of said first and last gears for passage therethrough of said driving member and said workpiece for respective engagement thereof with said first and last gears, said openings being formed to have respective inscribed circles of smaller radius than said respective cylindrical recesses for said shoulders of said first and last gears formed in said side plates but larger than respective inscribed circles of said passageways of said first and last gears; and

e. means passing through the center gear of said odd numbered plurality for connecting said side plates together thereby urging said respective bearing surfaces against said facing surfaces of said gears.

4,374,480
EXTENSION TOOL
William J. Diaz, 1028 W. Compton Blvd., Gardena, Calif. 90247
Filed Jan. 5, 1981, Ser. No. 222,710
Int. Cl.³ B25B *17/00*
U.S. Cl. 81—57.3 **6 Claims**

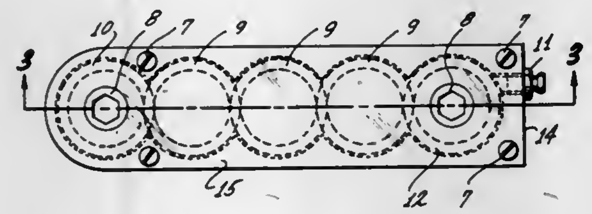

1. A wrench means for transmitting a torque to a screw fastener with restricted access, said wrench means comprising a non-rotating rigid elongated closed frame with a driven gear at one end, a driving gear at the opposite end, said driving and driven gears having multi-faceted recesses which accept standard square drive socket wrench components including ratchet wrenches, a gear train between the driving gear and driven gear including one or more idler gears all meshed together to provide a continuous torque transmission from the said driving gear to the said driven gear, all of said gears mounted into closely fitting circular recesses in said elongated closed frame, all of said gears completely supported on their outer diameters by said closely fitting circular recesses with the outer periphere of each gear acting as a shaft, with the said closely fitting circular recesses acting as bearings, said gears having no central supporting shafts, said gears retained into said elongated frame by one or more covers, said covers fastened to said elongated frame by fastener means and said covers and said elongated frame allowing external access to the driving and driven gears.

4,374,481
ADJUSTABLE SOCKET WITH DETACHABLE OR LOCKABLE ENGAGING HANDLE COMPONENT
Michael Brodie, P.O. Box 64, Vilna, Alberta, Canada
Filed Jun. 10, 1980, Ser. No. 158,225
Claims priority, application United Kingdom, Oct. 10, 1979, 7935169
Int. Cl.³ B25B *13/32*
U.S. Cl. 81—115 **19 Claims**

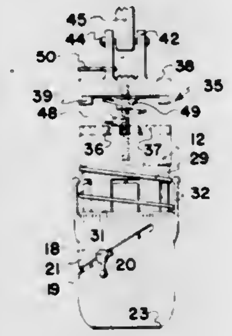

1. An adjustable socket assembly for nuts and bolts comprising in combination a substantially cylindrical body portion, a plurality of bolt and nut gripping fingers pivoted by the inner ends thereof around said body portion and extending beyond the distal end thereof, an adjusting shell surrounding said body portion and said fingers, means mounting said shell for partial rotation around said body portion, said partial rotation extending and retracting said shell along said body portion, means cooperating between said shell and said body portion to extend and retract one relative to the other as said shell rotates, means cooperating between said fingers and said shell to close and open the distal ends of said fingers relative to one another, and spring means operatively extending between said shell and said body portion normally urging said shell to extend and rotate relative to said body portion whereby said fingers are in the full open position, said body portion including a shoulder formed on the inner end thereof, said spring means surrounding said body portion and reacting between the underside of said shoulder and the inner end of said, a handle component, a connector for connecting said handle component to the upper end of said body portion and further means selectively and operatively connecting said handle component to said body portion for detachably engaging said handle component to said body portion whereby rotation of said handle component in either direction, rotates said body portion and said shell in the same direction, said further means comprising a clutch member on the upper side of said shoulder, a clutch engaging member journalled for free rotation by said connector upon the upper side of said shoulder facing said clutch member, spring means normally urging said clutch member and said clutch engaging member apart, said handle component being operatively connected to said clutch engaging member, downward pressure of said clutch engaging member overcoming said last mentioned spring means and detachably engaging said clutch engaging member with said clutch member whereby rotation of said handle in either direction rotates said body portion and said shell in the same direction, and means selectively engageable between said clutch engaging member and said connector to selectively lock said clutch engaging member into engagement with said clutch member.

4,374,482
VOCAL EFFECT FOR MUSICAL INSTRUMENT
Douglas R. Moore, Vernon Hills, and Alberto Kniepkamp, Arlington Heights, both of Ill., assignors to Norlin Industries, Inc., White Plains, N.Y.
Filed Dec. 23, 1980, Ser. No. 219,999
Int. Cl.³ G10H *1/02*
U.S. Cl. 84—1.19 **19 Claims**

1. In an electronic musical instrument of the type having a keyboard including a plurality of key switches each of which upon depression actuates a means which develops a tone signal whose frequency is determined by the particular operated key switche, the improvement for imparting a vocal effect to said tone signal comprising:

means responsive to the operation of said key switches for producing an indexing signal characterized by a logic transition which occurs for each change in the operational status of said key switches;

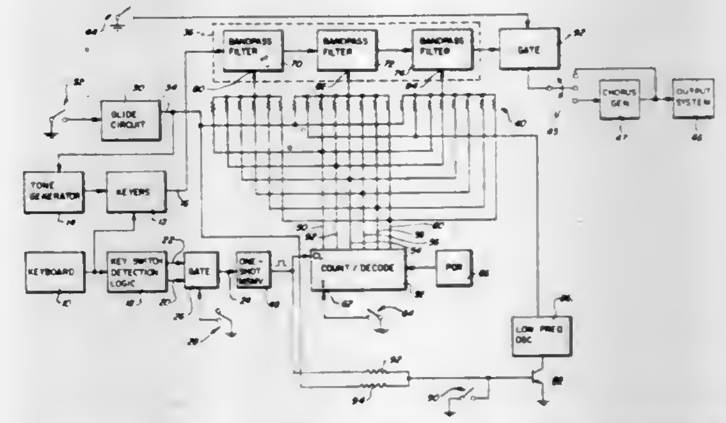

control means having a plurality of outputs sequentially actuated in response to successive transitions of said indexing signal; and

filter means programmable in response to each of said actuated control means outputs for modifying said tone signal to simultate a different vowel-like sound for producing said vocal effect.

4,374,483
IGNITION SYSTEM FOR AN ELECTRICAL CONNECTOR
George Kanoff, Elizabethtown, Pa., assignor to AMP Incorporated, Harrisburg, Pa.
Filed Mar. 30, 1981, Ser. No. 248,763
Int. Cl.³ F42C *19/12;* H02G *15/08*
U.S. Cl. 89—1 B **3 Claims**

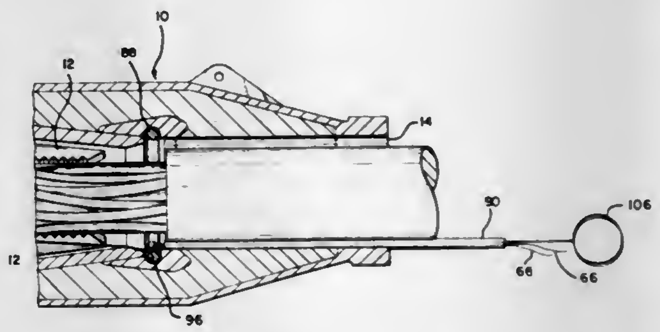

1. A device for use with an internally fired electrical connector of the type having detonating wires extending from the ignitor assembly within the connector through one end to the outside, said device comprising:

a. first means within the connector to which the detonating wires may be secured as they pass out of the connector, such as being tied in the manner of a double clove hitch or the like;

b. a tube for positioning in the connector with one end adjacent to the first means and the second end extending out of the connector, said tube being adapted for threading the detonating wires therethrough;

c. second means for immobilizing the detonating wires at the end of the tube adjacent the first means so that after firing, the detonating wires may be broken off at the first means by twisting the tube.

4,374,484
COMPENSATOR FOR MUZZLE CLIMB
Marthinus J. Bekker, and Douglas J. M. Hall, both of Salisbury, Southern Rhodesia, assignors to DRW Corporation, Troy, Mich.
Continuation-in-part of Ser. No. 868,631, Jan. 11, 1978, Pat. No. 4,235,152. This application Mar. 26, 1980, Ser. No. 134,045
Claims priority, application Southern Rhodesia, Jan. 12, 1977, 7/77; Oct. 17, 1977, 207/77
Int. Cl.[3] **F41F** *17/12*
U.S. Cl. 89—14 C **15 Claims**

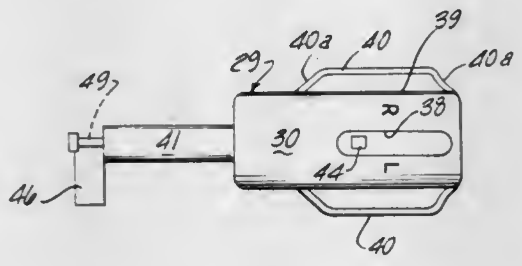

1. A lift compensator having a longitudinal axis and adapted to be mounted in an operating position on a gun barrel adjacent to the muzzle end, said compensator comprising an element having a sidewall extending longitudinally of said axis and having a plurality of vent means in said sidewall spaced circumferentially around said axis and arranged for communicating with and discharging combustion gases from the barrel transversely of said axis when at said operating position, and means for effecting a reaction force to compensate for transverse muzzle reaction when the gun is fired comprising deflector means associated with selected vent means and extending from said sidewall into the path of the gases discharged transversely from the associated vent means for redirecting said gases in a predetermined different direction transversely of said axis,

said compensator adapted for use with a gun having a plurality of flash suppressing ports spaced circumferentially around said barrel adjacent to its muzzle end and communicating with the barrel for discharging combustion gases transversely of said barrel, said vent means being arranged for selective communication with said ports for venting said gases therefrom transversely of said barrel when at said operating position,

said element of said compensator comprising a cylindrical sleeve, said vent means comprising two approximately diametrically spaced vents in said sleeve and a third vent in said sleeve between the first two vents, the remainder of said sleeve being impervious to gas flow therethrough.

4,374,485
SINGLE ANNULAR MEMBRANE TYPE OF PNEUMATIC POSITIONER
Sergio Lattuada, Bergamo, Italy, assignor to S.T.I. Strumentazione Industriale S.p.A., Gorle, Italy
Filed Jun. 2, 1980, Ser. No. 155,546
Claims priority, application Italy, Dec. 21, 1979, 2939 A/79
Int. Cl.[3] **F15B** *13/16*
U.S. Cl. 91—387 **3 Claims**

1. A pneumatic positioner for use with a fluid motor having a piston rod, said pneumatic positioner comprising:

a generally hollow body defining an annular control pressure air chamber in said body;

an annular diaphragm forming one wall of said air chamber, said annular diaphragm having in its center an opening and being rigidly mounted to said body at both its inner and outer peripheries,

a dish-like member engaging a circular area of said diaphragm between its inner and outer peripheries;

biasing means for applying a variable biasing force to said dish-like member in the direction of said diaphragm and in response to the position of the piston rod;

a valve stem engaging at its one end said dish-like member and extending through a hole in said body concentric with the center of said diaphragm and said air chamber,

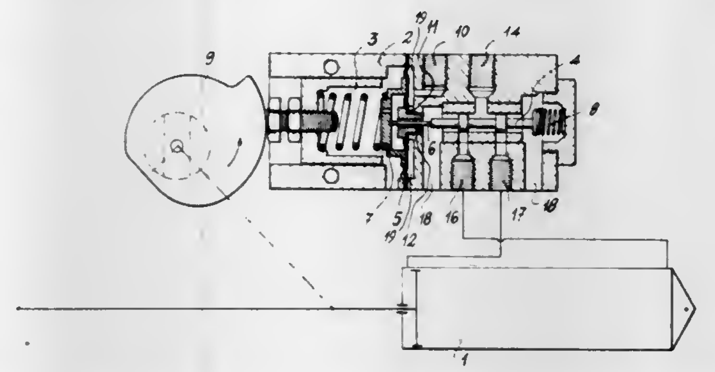

said valve stem being slidably movable within said hole without contact with said body;

a valve operably coupled to said valve stem for controlling the flow of fluid to and from said motor.

4,374,486
RADIAL PISTON MOTOR OR PUMP
Karl Eickmann, 2420 Isshiki, Hayama-machi, Kanagawa-ken, Japan
Filed Nov. 8, 1979, Ser. No. 92,791
Int. Cl.[3] **F01B** *13/06;* **C22C** *33/00*
U.S. Cl. 91—488 **27 Claims**

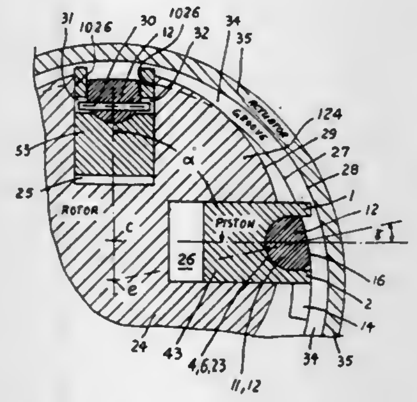

1. In a radial piston device, wherein fluid flows from inlet means through passages into and through substantially radially arranged cylinders of a rotor revolvably mounted in a housing of said device and discharges out from said cylinders through passages and outlet means,

the combination of pistons reciprocating in said cylinders, slippers interposed between a piston stroke actuator means and the pistons, a slipper-piston bearing for each individual piston and slipper located parallel to the axis of rotation of said rotor which makes said slipper tiltable and pivotable on the respective bearing bed in the respective piston;

an "H-form" of each individual slipper when seen from top, having slots between the guide portions of said slipper laterally of said slots;

each individual cylinder of said cylinders provided with wall-portions which extend from portions of the wall of said cylinder in the directions of said respective portions of the wall of said cylinder along respective radial extension segments of said rotor; and an improvement;

wherein said improvement consists in the provision of radial extensions of portions of said pistons in radially outward direction relative to said rotor,

wherein said extensions are located perpendicular to the axis of said slipper-piston bearing and at least partially outwardly of said rotor,

wherein retaining means are provided between said extensions and radially outwardly of a portion of said slipper for holding said piston and slipper in a joint and tiltable disposition, and;

wherein said extensions form face portions extending from the outer face of said piston in the direction of the respective portion of said outer face of said piston to be guided at least partially on said wall portions of said cylinder and to radially slide therealong.

4,374,487
PILOT WITH CANTILEVERED SPRING
Neil H. Akkerman, Kingwood, Tex., and Bruce D. Christensen, New Orleans, La., assignors to Baker CAC, Belle Chasse, La.
Continuation of Ser. No. 23,201, Mar. 23, 1979, abandoned. This application Jan. 16, 1981, Ser. No. 225,593
Int. Cl.[3] **F16K** *31/385*
U.S. Cl. 92—95 **8 Claims**

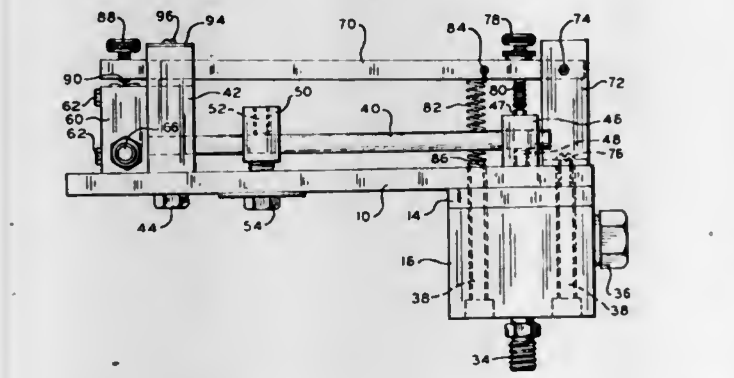

1. A fluid pressure actuated pilot comprising: a sensing piston; diaphragm means providing a fluid-tight seal between a source of fluid pressure to be sensed and said piston, said piston and a portion of said diaphragm means being movable upon changes in the pressure of the sensed fluid; a pair of cantilevered spring rods, each of said rods having a static end portion and a dynamic end portion opposite said static end portion, said dynamic end portions of said spring rods disposed for common movement in a reference plane substantially normal to the movement of said piston, means fixedly secured to said dynamic end portions of said rods for interconnecting said dynamic end portions of said rods and operably coupling said dynamic end portions of said rods to said piston; clamp means fixedly secured to said rods intermediate said static end portions and said dynamic end portions and adjustment means coupled to said clamp means for displacing said rods in a direction normal to said reference plane whereby the static preload force of said spring rods may be increased and decreased by adjusting said adjustment means.

4,374,488
WHEY FILTER
Harold J. Peterson, Iowa County, Wis., assignor to Farmers Pride Cheese, Inc., Arena, Wis.
Continuation of Ser. No. 81,004, Oct. 1, 1979, abandoned. This application Apr. 6, 1981, Ser. No. 250,921
Int. Cl.[3] **A01J** *25/00, 25/11;* **A23C** *19/02*
U.S. Cl. 99—459 **12 Claims**

1. A filter for removing fine particles of cheese curd from liquid whey comprising:

a stationary tank (18) having a substantially vertically extending cylindrical portion therein;

a mesh screen (30) transversely positioned in the cylindrical portion of the tank (18), the screen (30) being of circular shape so as to extend completely across the cylindrical portion of the tank (18) and being maintained in quiescent relation by fixed engagement with the tank (18);

at least one inlet (36) for introducing whey with fine curd particles into the tank (18) just above the screen (30), the inlet (36) oriented so as to direct the input whey in a trajectory generally tangential to the periphery of the screen (30) so that the whey tends to filter downwardly through the screen (30) and the curd particles tend to remain above the screen (30) and be forced toward the

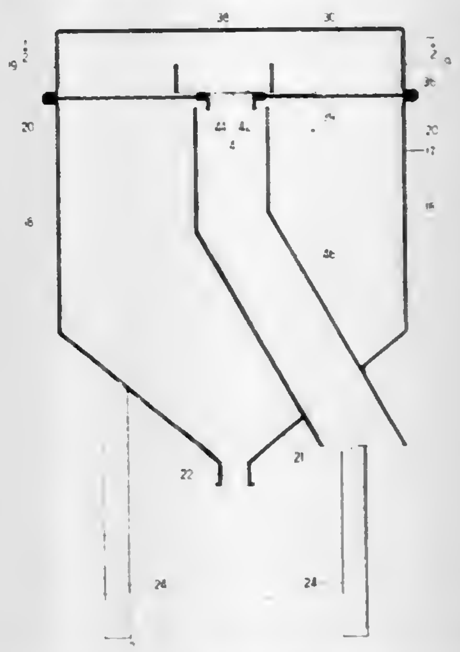

center thereof by the tangential flow of whey on the screen; and

an outlet (22) in the lower portion of the tank (18) below the screen (30) for discharging whey from the tank (18).

4,374,489
ADAPTABLE FOOD SMOKER ATTACHMENT
Jack Robbins, Mount Ida, Ark., assignor to Ole-Arkie Corp., Hot Springs, Ark.
Filed Jun. 15, 1981, Ser. No. 273,491
Int. Cl.[3] **A23B** *4/04*
U.S. Cl. 99—482 **3 Claims**

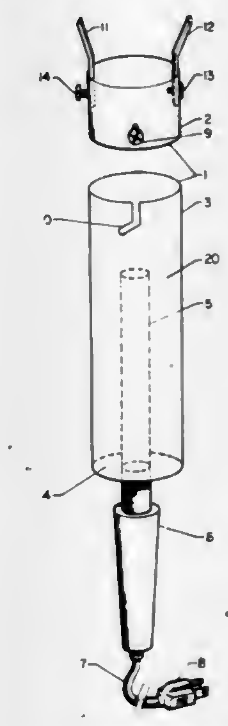

1. An adaptable food smoker attachment comprised of two parts, the first part being a coupling unit having at the upper end thereof means for removable connection to a draft opening located on the underside of a fixed or portable cooking grill, oven, or meat storage case; the second part being a smoking column, which is a tube, hollow column, or barrel having at the upper end thereof a means for removable connection to the lower end of the coupling unit in a locking fashion and disconnection therefrom in a reverse locking fashion, the smoking column having an electric power heating source sealed in the

lower portion thereof, the upper end of the electric power heating source extending upwards into the smoking column and being spaced from the walls thereof so that a space in the smoking column is provided for containment of hardwood particles or flakes to be smoldered, the lower end of the electric power heating source terminating in means for connection to a source of electric current.

4,374,490
HAM SLICING MACHINE
Michael R. Boyer, 3405 Cranberry, North Street, Mich. 48049
Filed Oct. 14, 1980, Ser. No. 196,783
Int. Cl.³ A23N *7/00*
U.S. Cl. 99—538 **11 Claims**

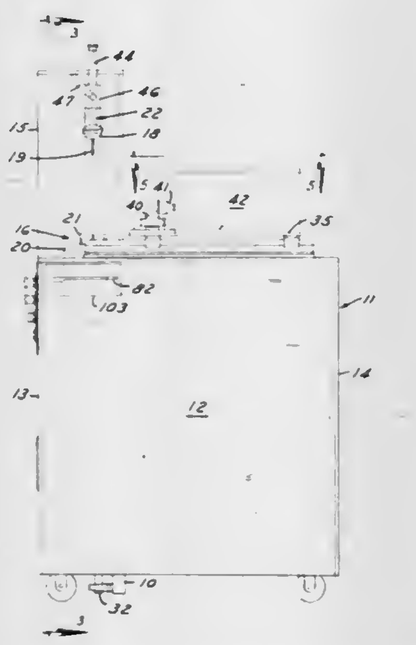

1. A ham slicing machine including a frame, ham mounting means, driving means including a first motor connected to a rotatable feed screw carried by the frame for simultaneously rotating and moving the ham mounting means longitudinally of the axis of rotation of the feed screw, and a reciprocatable slicing knife supported by the frame for movement transversely of the axis of rotation of the feed screw into engagement with the ham during the rotating and longitudinal movements thereof, wherein the improvement comprises:
a slicing table;
guide means carried by the frame for slidably supporting the slicing table for linear movement in a direction transverse to the axis of rotation of the feed screw between working and non-working positions relative to the ham;
means including a second motor mounted on the slicing table for supporting and reciprocatably driving the slicing knife in directions transverse to the direction of linear movement of the slicing table;
operating means for moving the slicing table between said working and non-working positions; and
motion transmitting means acting between the operating means and the slicing table for resiliently urging the slicing table to the working position in response to movement of the operating means to the working position.

4,374,491
APPARATUS FOR TREATING AND DISPOSING OF BIO-HAZARDOUS WASTE AND SOLID WASTE
Don J. Stortroen, and Michael L. Brown, both of P.O. Box 1183, Tracy, Calif. 95376
Filed Dec. 12, 1980, Ser. No. 215,836
Int. Cl.³ B30B *15/30*
U.S. Cl. 100—73 **4 Claims**

1. Apparatus for receiving, treating, and disposing of bio-hazardous or infectious solid wastes and non-hazardous or non-infectious solid wastes, comprising a housing defining a pair of discrete separate adjacent chambers, the first of said chambers being enclosed and having an opening therein through which infectious waste may be introduced, said first chamber being adapted to permit steaming and sterilization of the infectious waste, the second of said chambers being enclosed and having an opening therein through which non-infectious material may be introduced, means defining a passage interconnecting said first and second chambers, a closure

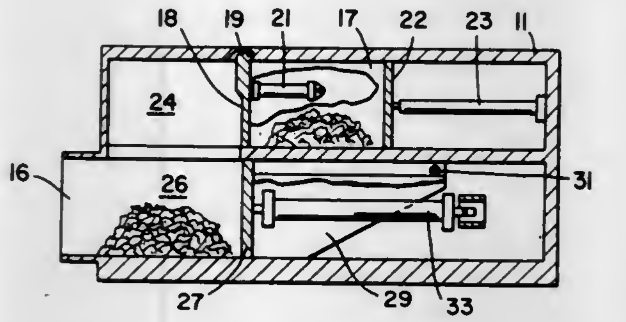

for selectively opening and closing said passage, means for ejecting the sterilized contents from said first chamber into said second chamber through said passage when said closure is in an open position, and compaction means in said second chamber for selectively compacting the non-infectious waste and for compacting the infectious waste received from said first chamber and for ejecting all of such waste from said housing at one end of said second chamber.

4,374,492
ANTIPERSONNEL MINE
Ernest Goldberg, Westford; Gray C. Trembly, Arlington, and William A. Zarr, Concord, all of Mass., assignors to Raytheon Company, Lexington, Mass.
Filed Apr. 2, 1976, Ser. No. 673,019
Int. Cl.³ F42C *11/06*
U.S. Cl. 102—220 **3 Claims**

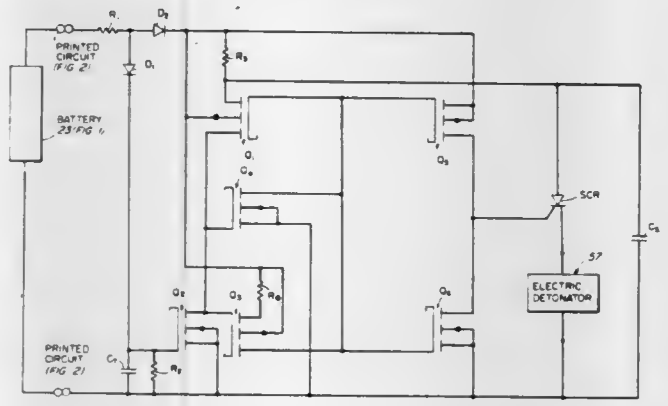

1. In an antipersonnel mine incorporating a delayed action electrical detonator, an improved timing arrangement for actuating such detonator, such arrangement comprising:
(a) a first and a second capacitor;
(b) means for charging the first and the second capacitor and maintaining the charge on both capacitors until a timing period is to be initiated;
(c) resistor means, operative when a timing period is initiated, for discharging the first capacitor according to a preselected time constant; and
(d) electronic switching means, interposed between the second capacitor and the electrical detonator, such switching means being latched in an unactuated state by the charge on the first capacitor during the timing period and being actuable by the charge on the second capacitor only at the end of the timing period to discharge the second capacitor through the electrical detonator when the first capacitor is discharged to a predetermined level, such switching means including:
(i) a silicon controlled rectifier having the second capacitor connected to its anode electrode and the electrical detonator connected in series with the silicon controlled rectifier;
(ii) means, including a first normally conducting field effect transistor, for grounding the control electrode of the silicon controlled rectifier during the timing period; and
(iii) means, including a second normally nonconducting field effect transistor, for rendering such first field effect transistor nonconducting and for rendering such second field effect transistor conducting to connect the second capacitor to the control electrode of the silicon controlled rectifier at the end of the timing period.

4,374,493
SYSTEM FOR MODEL ROCKET CONSTRUCTION
Lawrence B. Hoffing, 14733 McCormick, Van Nuys, Calif. 91411
Filed Jun. 29, 1981, Ser. No. 278,818
Int. Cl.³ F42B *4/08*; A63H *33/20*
U.S. Cl. 102—348 **3 Claims**

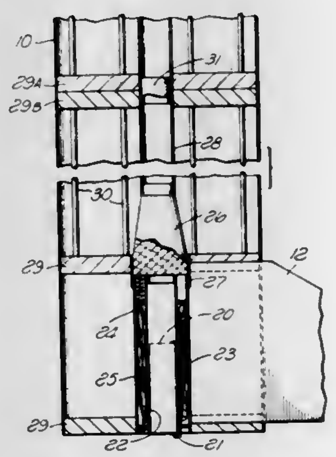

1. A model rocket assembly comprising:
(a) a rocket body having an internal rigid tube containing a solid fuel rocket motor and extending substantially the entire length of the rocket and defining a frame;
(b) substantially circular spacer disks concentric to said tube and spaced along the length of said tube;
(c) a plurality of ribs joined to the outer circumferences of said disks substantially spanning the length of the body of the rocket and defining a frame;
(d) skin formed around the frame of ribs in substantially cylindrical configuration spanning the length of the rocket and defining an enclosed void;
(e) the top portion of said rocket body defining an aerodynamic nose assembly;
(f) aerodynamic fins joined at the base of the rocket body;
(g) said body being defined as a plurality of body sections, each constructed of an internal rigid tube, at least two circular spacer disks coaxial to said tube, a plurality of ribs joined to the outer circumferences of said disks and a skin formed around the frame of ribs in substantially cylindrical configuration such that the sections may be joined together by fastening the circular spacer disk of one section to a disk of next adjacent section forming a continuous cylindrical rocket body.

4,374,494
ELECTRO-MAGNETIC DECOY-LAUNCHER AMMUNITION
Louis Maury, Toulouse, France, assignor to Societe E. Lacroix-Tous Artifices, France
Filed Oct. 20, 1980, Ser. No. 198,636
Claims priority, application France, Nov. 9, 1979, 79 27681
Int. Cl.³ F42B *4/00*
U.S. Cl. 102—357 **5 Claims**

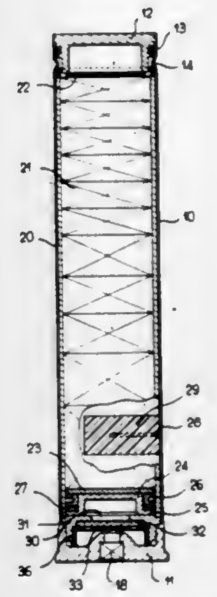

1. Electro-magnetic decoy-launcher ammunition, comprising an outer body having a lower portion, impeller means in said lower portion of said body, thrust means, a charge of electro-magnetic decoy enclosed in said body to be ejected by said thrust means when the impeller means is excited, means defining a tubular transfer container in which the charge remains inside the outer body, said tubular transfer container being closely fitted into said outer body, said transfer container having a bottom portion, said thrust means comprising a thrust piston in said bottom portion of the transfer container, said thrust piston including means defining an internal downwardly directed recess, peripheral sealing means for providing a seal against the inner surface of the transfer container, a top defining a plane surface, and a semi-rigid disc co-operating with the plane surface of the thrust piston and in contact with the charge on its other side, said impeller means being disposed to cause the propelling agent to co-operate with the internal recess of the thrust piston.

4,374,495
WARHEAD FOR ANTITANK MISSILES FEATURING A SHAPED CHARGE
Franz R. Thomanek, Am Schlosskeller 23, D-8898 Schrobenhausen-Sandizell, Fed. Rep. of Germany
Filed Sep. 12, 1978, Ser. No. 946,041
Claims priority, application Fed. Rep. of Germany, Sep. 17, 1977, 2741984
Int. Cl.³ F42B *13/10*
U.S. Cl. 102—476 **31 Claims**

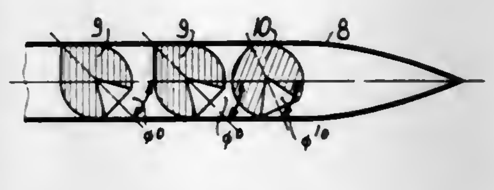

1. In an anti-tank warhed for missiles of the type having at least one shaped charge, the improvement comprising said shaped charge being positioned within said warhead with its longitudinal axis directed downward forming an angle ϕ of 15 to 50 degrees with respect to the longitudinal axis of the war-

head in a vertical plane, and the shaped charge being large enough to at least substantially span the inner diameter of the warhead.

4,374,496

VEHICLE CONVEYOR

Daniel C. Hanna, 1133 SW. Rivington Dr., Portland, Oreg. 97201

Filed Dec. 31, 1980, Ser. No. 221,709

Int. Cl.³ B61B *10/04, 13/12;* **B65G** *17/24, 19/26.*

U.S. Cl. 104—172 B **1 Claim**

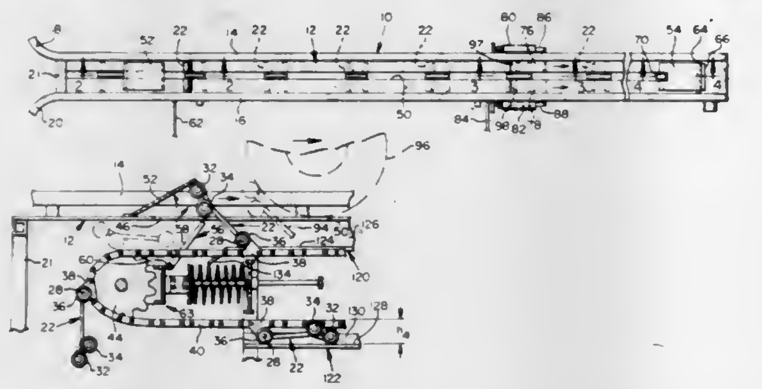

1. In a conveyor having an endless chain for transporting a vehicle forwardly along a generally horizontal track, a roller mechanism for engaging a tire of the vehicle, the roller mechanism comprising:

an arm having a first end hingedly secured to the chain and a second end remote from the first end;

a first roller rotatably disposed on the arm near the second end;

a second roller rotatably disposed on the arm intermediate the ends; and

a third roller rotatably disposed on the arm near the first end;

the arm being selectively positionable relative to the track so that the axes of rotation of the rollers are horizontal and perpendicular to the direction of travel of the chain along the conveyor and so that the axis of rotation of the first roller is higher than the axis of rotation of the second roller, the first roller being carried entirely above the track in position to engage the tire of the vehicle when the tire is located forwardly of the first roller on the track, the second roller being disposed forwardly relative to the first roller and in position to roll on the track to position the first roller to engage the tire only, the axis of rotation of the first roller being disposed a distance above the track greater than one-half the vertical distance from the track to the highest point on the circumference of the first roller, the third roller being disposed forwardly relative to the second roller and in position to engage the underside of the track when the roller mechanism is engaging the tire and transporting the vehicle.

4,374,497

LEVELING TABLE

Pierre Harmand, 9 Rue Malaz, F-74600 Seynod, France

PCT No. PCT/FR79/00125, § 371 Date Sep. 8, 1980, § 102(e) Date Sep. 8, 1980, PCT Pub. No. WO80/01366, PCT Pub. Date Jul. 10, 1980

PCT Filed Dec. 13, 1979, Ser. No. 214,000

Claims priority, application France, Jan. 8, 1979, 79 00311

Int. Cl.³ A47F *5/12*

U.S. Cl. 108—4 **6 Claims**

1. An adjustable support for positioning an object in an exact predetermined position and maintaining it in said position, comprising:

a fixed substantially horizontal base;

a table having a lower surface and an upper surface, said upper surface supporting said object;

a vertical leg having one end rigidly fixed to said base and the other end attached by a universal joint to the central portion of the lower surface of said table, said table being movable with respect to said vertical leg;

a plurality of lateral legs, each of said lateral legs comprising first and second telescoping elements having ball-heads at the ends thereof;

a first plurality of fixed seats secured to said base, each of said first plurality of seats receiving a ball-head of one of said first telescoping elements, said first plurality of fixed seats being spaced about said vertical leg;

a second plurality of fixed seats secured to the lower surface of said table, each of said second plurality of seats receiving a ball-head of one of said second telescoping elements and being located opposite a corresponding seat of said first plurality of fixed seats; and

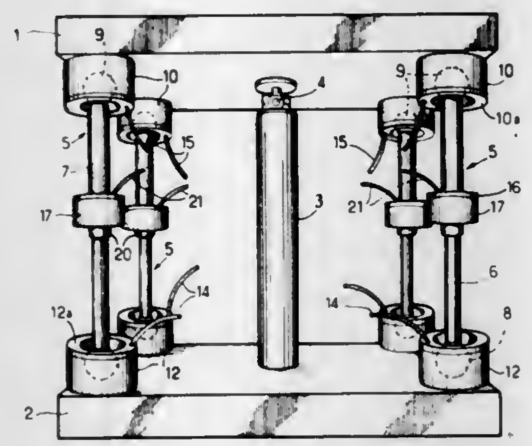

a plurality of locking pistons each slidably positioned with a respective one of said first and second pluralities of fixed seats adjacent the ball-head received within said seat, each of said locking pistons being pneumatically actuatable to lock said ball-head within its corresponding seat.

4,374,498

SUPPORT AND JOINER MEANS FOR SHELVING

Bernard Yellin, 6 Oak Brook Club Dr., Oak Brook, Ill. 60521

Filed Feb. 7, 1980, Ser. No. 119,256

Int. Cl.³ A47B *3/00, 5/00*

U.S. Cl. 108—114 **10 Claims**

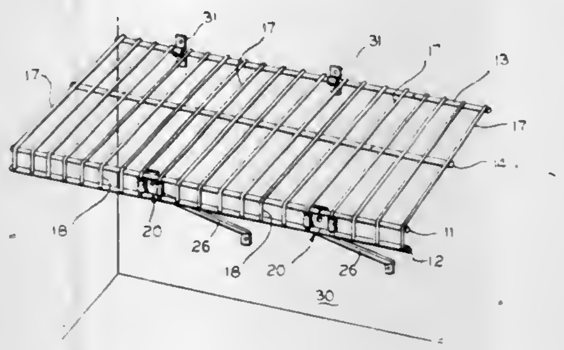

1. A shelf and mounting structure including in combination first, second and third rods all in spaced and parallel relation with each other, said first and second rods both lying in a vertical plane and said second and third rods both lying in a horizontal plane, a plurality of stringers each extending transversely of said second and third rods and secured thereto in spaced relation, each said stringer having a forward integral depending portion secured to said first and second rods, a support member including a channel shaped body adapted to be received in a space delineated by said first and second rods and a pair of adjacent depending stringer portions, said channel shaped body having integral lateral terminal portions each engaging a forward surface of a respective depending stringer portion, and a bracket arm having upper and lower end portions with the upper end portion received in the channel of said body and adapted to bridge and engage the rear surfaces of said first and second rods, the lower end portion of said bracket arm being adapted for securement to a wall surface.

4,374,499

TREATMENT DURING TRANSPORT OF SOLID WASTE

Wayne M. Fassell, Newport Beach, Calif., assignor to Board of Control of Michigan Technological University, Houghton, Mich.

Continuation of Ser. No. 772,302, Feb. 25, 1977, abandoned, which is a continuation of Ser. No. 581,902, May 29, 1975, abandoned. This application Nov. 3, 1978, Ser. No. 957,439

Int. Cl.³ C22B *7/00*

U.S. Cl. 110—243 **6 Claims**

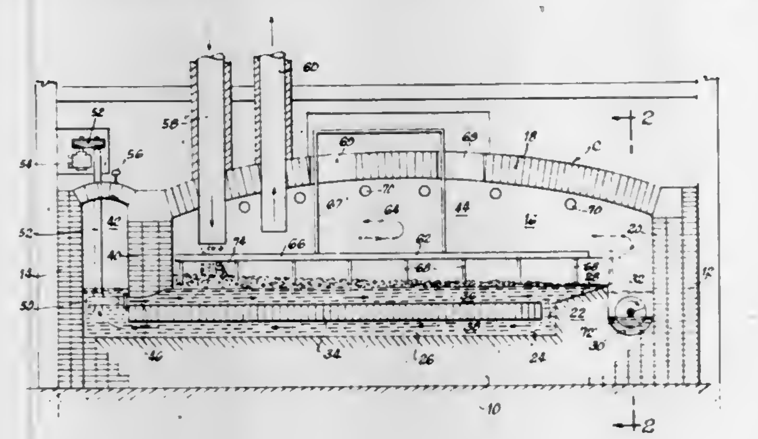

1. A device for treatment in transport of solid waste comprising an elongate enclosure, a trough extending lengthwise in the bottom portion of said enclosure for containing a bath of molten lead, means for imparting linear flow of the molten lead along the top side of the bath from a head end portion to a foot end portion of the bath, heating means for maintaining the lead in the bath in the molten state, inlet means overlying the head end portion of the bath of molten lead for the introduction of solid waste onto the underlying surface of the bath, outlet means communicating with a portion of the area within the enclosure above the bath for exhausting gases and vapors generated upon pyrolysis of organic material in the solid waste during movement with the bath from the head end portion to the foot end portion; and means for removal of residual solids from the bath at the foot end portion, and which includes a separating wall adjacent the head end portion of the bath, with the wall extending downwardly from the top of the enclosure to a level below the level of molten lead in the bath to subdivide the enclosure into a heating chamber and a pyrolysis chamber and to form a weir at the head end portion of the bath, said molten lead being exposed directly in both of said heating and pyrolysis chambers and said chambers being isolated one from the other except through said molten lead, said heating means being exposed to the interior of said heating chamber for introducing heat to said chamber and directly to the molten lead therein, and said means for imparting linear flow to the molten lead comprising a pumping means for displacement of the molten lead from the heating chamber through the weir into the pyrolysis chamber.

4,374,500

SEED PLANTER DEPTH CONTROL

Lawerence D. Westerfield, Romeoville, Ill., assignor to International Harvester Co., Chicago, Ill.

Filed May 20, 1981, Ser. No. 265,515

Int. Cl.³ A01C *5/00*

U.S. Cl. 111—85 **5 Claims**

1. A seed planter depth control comprising:

(a) a frame, said frame being adapted to be attached for towing to a mobile power source;

(b) a pair of opposed, furrow forming disks rotatably mounted on said frame with the disks substantially contacting each other at the approximate point of entry into the soil and diverging apart rearwardly and upwardly relative to the direction of travel;

(c) a seed tube supported from said frame rearward of said furrow forming disks, one end of said tube extending toward the furrow and the other end being adapted for connection to a seed dispenser;

(d) a pair of gauge wheels means individually mounted on said frame for regulating furrow depth, each means including a support pivotally mounted on said frame, a wheel located generally adjacent an outer surface of a disk and rotatably mounted on said support on an axis rearward of the disk axis of rotation;

(e) furrow closing means mounted on said frame rearwardly of said disks and gauge wheels;

(f) gauge wheel adjustment means, including a lever pivotally mounted on said frame and having one end adapted to engage said wheel supports, a slide for moving the other

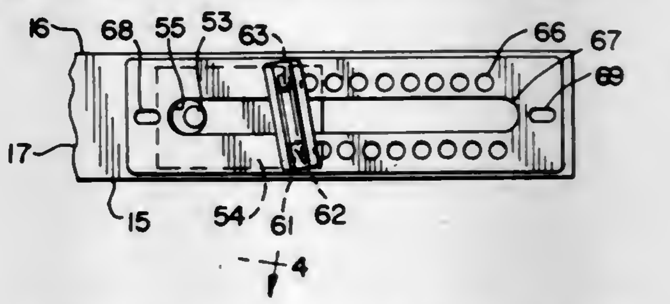

end of said lever, a plate having a plurality of equally spaced holes, and a handle resiliently mounted on said slide and having structure to engage said holes to set and maintain desired furrow depth; and

(g) adjustment means for movably mounting said plate on said frame, said means including a longitudinally spaced and substantially aligned pair of elongated holes in said plate and complementary fasteners to selectively secure said plate to said frame whereby when said disks and wheels are contacting a level surface and said plate is moved until a zero position hole is engaged by said handle structure, said plate can be fixed to said frame wherein accurate furrow depth control is achieved.

4,374,501

GARMENT TOE CLOSING ASSEMBLY

Cecil R. Bell, Jr.; George D. Nakhle, both of Pinnacle, and A. Russell Edward, Winston-Salem, all of N.C., assignors to Consolidated Foods Corporation, Winston-Salem, N.C.

Filed Jul. 18, 1980, Ser. No. 170,022

Int. Cl.³ D05B *21/00*

U.S. Cl. 112—121.15 **8 Claims**

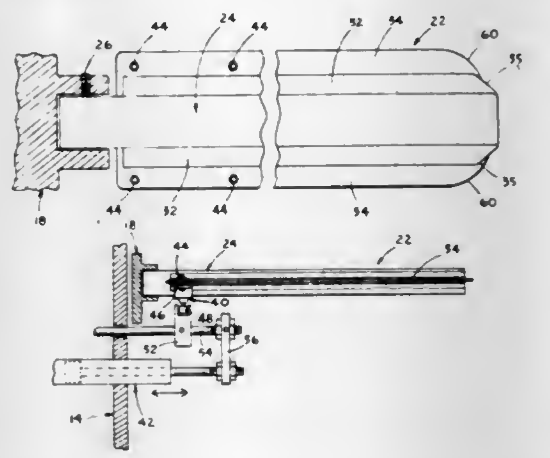

1. In an apparatus having clamping and sewing instrumentalities for closing an end portion of a tubular hosiery blank, an indexable turret assembly including a plurality of displaceable blank support assemblies for sequentially positioning the support assemblies at a series of work stations, each said support assembly including an elongated tubular unit secured to the turret assembly, blade means, and actuator means for selectively displacing said blade means, said tubular unit including core means and means encompassing said core means, said

encompassing means including opposed fins, said fins defining slots therein for slidably supporting and guiding said blade means.

7. In an assembly for supporting or tubular hosiery blank including an elongated tubular unit for supporting and guiding of plurality of blades as the blades are selectively reciprocated to present a blank end portion to a prescribed location for subsequent sewing of the blank end portion, said tubular unit including an elongated, hollow cylindrical portion having diametrically opposed fins integral therewith, each of said fins defining a radial slot extending longitudinally of said cylindrical portion for slidably receiving a blade therein, said cylindrical portion and said fins being of molded, resin construction, each fin being tapered and reduced in thickness as it extends radially from said cylindrical portion.

4,374,502
MECHANISM GENERATING HELICAL MOTION
George M. Toman, Chicago; Thomas J. Bock, Schaumburg, and Chandrakant Bhatia, Buffalo Grove, all of Ill., assignors to Union Special Corporation, Chicago, Ill.
Filed May 9, 1978, Ser. No. 904,206
Int. Cl.³ D05B *57/34*
U.S. Cl. 112—162 7 Claims

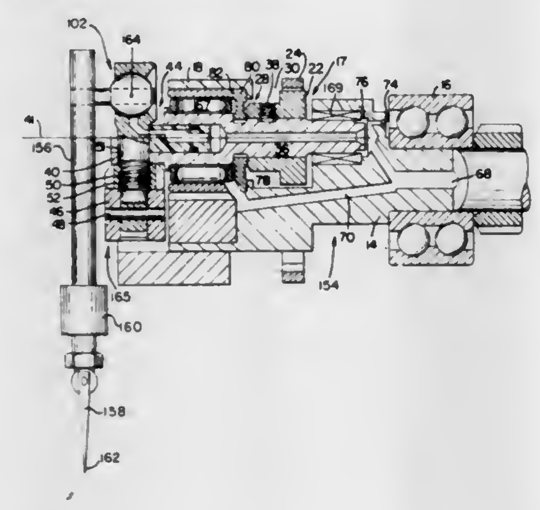

1. A sewing machine having a mechanism for converting rotary motion into helical motion comprising:
a Cardan gear means having an output means sweeping out a straight line, said output means having an output center point;
a lever means carrying a work performing instrumentality and sweeping out a straight line;
a bearing means constraining said lever means whereby it is free to move only along and around its major axis;
a force transfer means capable of transferring translational and rotation force from said output means to said lever means and having the same output center point as said output means; and
a means operatively associated with said Cardan gear means whereby the straight line swept out by said output means will be skewed with respect to the straight line swept out by the lever means.

4,374,503
CHAIN STITCH DEVICE FOR LOCK STITCH SEWING MACHINES
Stanley J. Ketterer, Jamesburg, N.J., assignor to The Singer Company, Stamford, Conn.
Filed Mar. 27, 1981, Ser. No. 248,086
Int. Cl.³ D05B *1/14, 57/04*
U.S. Cl. 112—163 7 Claims

1. A chain stitch sewing machine comprising a work penetrating thread carrying needle, a circularly moving loop taker including a beak for seizing and manipulating loops of thread from said needle, a work feeding means for advancing work between needle penetrations, actuating mechanism for operating said needle, loop taker and work feeding means cooperatively, a thread loop retaining means for retaining loops of thread seized by said beak from said needle and supporting said loops of thread in a position for penetration by said thread carrying needle, thread loop shedding means operative to effect release of a thread loop from said thread loop retaining

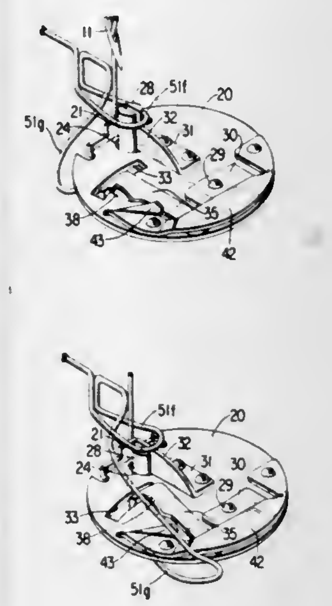

means, and means responsive solely to the action of a subsequently seized thread loop as it is being manipulated by said loop taker beak and before it is retained by said thread loop retaining means for operating said thread loop shedding means to release a previously retained thread loop.

4,374,504
SUCTION DREDGER BARGE
Rudolf H. Loevendie, Alblasserdam, Netherlands, assignor to IHC Holland N.V., Papendrecht, Netherlands
Filed Apr. 14, 1981, Ser. No. 254,204
Claims priority, application Netherlands, Apr. 14, 1980, 8002154
Int. Cl.³ B63B *3/38, 41/00*
U.S. Cl. 114—37 2 Claims

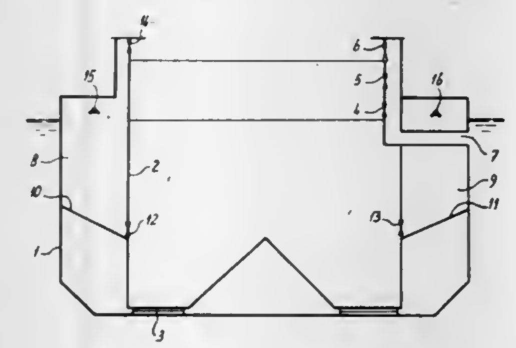

1. A suction dredger having a central hold and air chambers located on both sides of the hold, said central hold having an overflow toward the outside of the hull and an overflow toward said air chambers, control valves for opening and closing the latter overflow, said air chambers having bottom walls that incline downwardly toward the central hold, discharge valves between the air chambers and the central hold at the bottom of the air chambers, and means to unload said central hold.

4,374,505
PORTABLE GLUE APPLICATOR
Ned B. Theriot, Rte. 3, Box 544, Baker, La. 70714
Filed Apr. 27, 1981, Ser. No. 257,530
Int. Cl.³ B05C *11/00*
U.S. Cl. 118—40 21 Claims

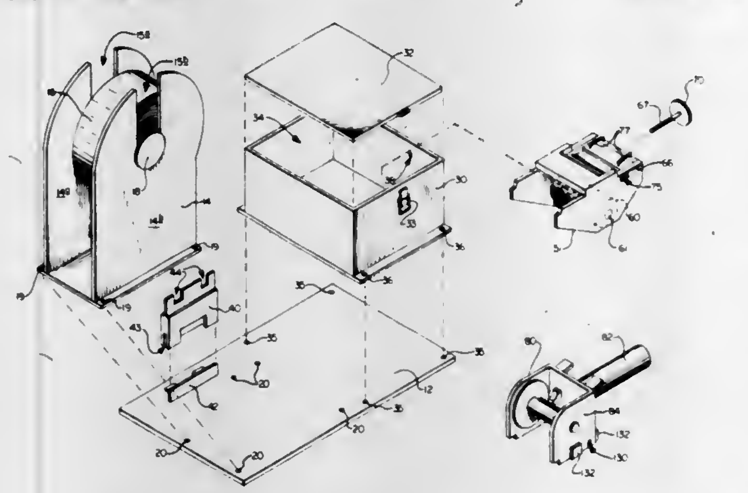

1. A device for applying liquid to a continuous web of material comprising:
a. a frame;
b. a supply spool having a wound web of material thereon and mounted during operation on said frame;
c. a reservoir at least partially filled during operation with a liquid to be applied to said material and supported adjacent said spool by said frame;
d. a removable guide roller means disposed within said reservoir during operation for supporting guiding a portion of said web of material guided into said reservoir for coating, said roller means being a removable assembly comprising at least a roller support frame, and a roller rotatably movable thereon; and
e. guided dispensing reel means removably attachable to said web after said web is coated, for advancing said web from said supply reel to said reservoir for coating and thence onto said dispensing reel means.

4,374,506
AUTOMATIC FLUE GAS HEAT RECOVERY SYSTEM
Daniel A. Whalen, 5031 Mont Clair #A, Peoria Heights, Ill. 61614
Filed Sep. 18, 1981, Ser. No. 303,533
Int. Cl.³ F22B *33/00;* F24C *13/00*
U.S. Cl. 122—20 B 13 Claims

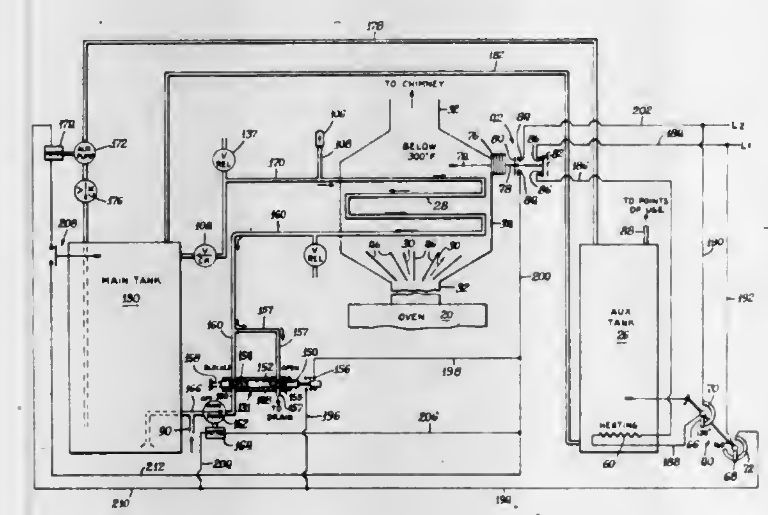

1. In an automatic flue gas heat recovery system:
a heat exchanger housing adapted to be positioned in a flue gas flow from a heat source;
heat exchanger tube means in said housing;
hot water storage tank means;
water inlet and outlet conduits connected to the hot water storage tank means;
conduit means including at least two conduits connecting the tank means with the heat exchanger tube means to provide a closed loop for circulating water therebetween;
motor driven pump means in said conduit means effective when activated to circulate water in the closed loop;
drain valve means being activatable between opened and closed conditions and connected to said conduit means in position to drain said heat exchanger tube means when opened; and
means for de-activating said pump means and opening said drain valve means in response to a temperature in said storage tank means exceeding a predetermined value.

4,374,507
DEVICE FOR INTRODUCING ALCOHOL INTO GASOLINE ENGINE AS SUPPLEMENTAL FUEL
Alfredo C. Protacio, Project Sta. Barbara Sangley Point, Cavite City, Philippines; Ramon V. Navarro, Cavite City, Philippines; Eliseo M. Rio, Jr., Cavite City, Philippines; Antonio D. Alonte, Cavite City, Philippines, and Felix J. Pascual, Cavite City, Philippines, assignors to Alfredo C. Protacio, Cavite City, Philippines
Filed Jun. 12, 1980, Ser. No. 158,695
Claims priority, application Philippines, Jun. 18, 1979, 22665
Int. Cl.³ F02B *75/12*
U.S. Cl. 123—1 A 8 Claims

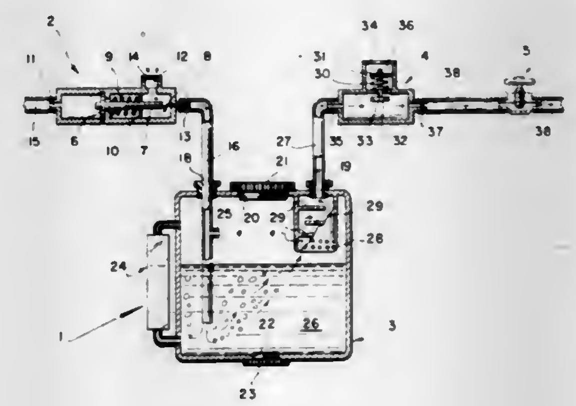

1. A device for introducing alcohol vapors together with gasolene vapors into the combustion chamber of an engine comprising:
a vapor control valve wherein the control element is connected to the intake manifold of the internal combustion engine having an air intake opening and an air output opening;
an air tight tank adapted to hold a volatile liquid such as alcohol and the like having a liquid inlet and a liquid outlet port and having an air inlet pipe connected to the air output opening of the vapor control valve, where the air inlet pipe has an opened end that allows the bubbling of air through the liquid alcohol and a by-pass opening that facilitates the flow of air on top of the volatile liquid and having an air outlet pipe whose inlet end is terminated by a cylindrical container with multiple holes and inter-layered inside with a plurality of baffle plates; and
a deceleration air feed valve having its input connected to the air outlet pipe of the air tight tank and having an air inlet port and providing a check valve for supplying air to the engine upon reaching of a predetermined suction pressure from the engine's manifold in order to avoid generation of a vacuum inside the alcohol containing air tight tank.

4,374,508
FUEL SAVER SYSTEM FOR INTERNAL COMBUSTION ENGINES
Blas D. Pena, Monterrey, N.L., Mexico
Filed Jun. 13, 1980, Ser. No. 159,163
Int. Cl.³ F02M *25/04*
U.S. Cl. 123—25 E 3 Claims

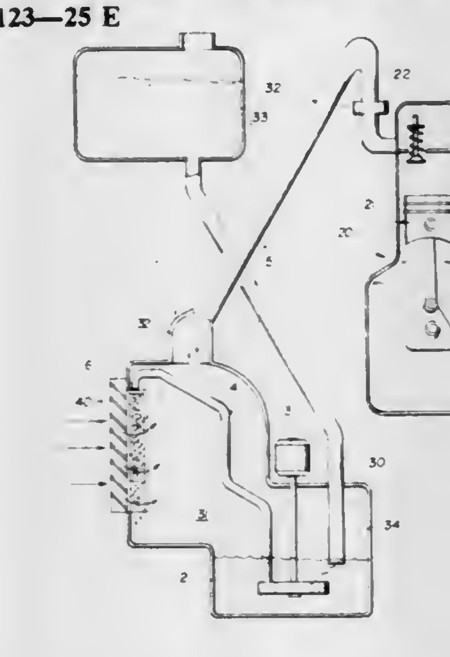

1. A device for improving the fuel economy of an internal combustion engine of the type having a carburetor for mixing a liquid fuel with combustion air comprising, a housing having a chamber, filter means for passing combustion air into said chamber, said housing including a reservoir section for containing a mixture of ether, alcohol and water in a ratio of about 1 part ether to 10 parts alcohol to 1000 parts water, pump means communicating with said reservoir section for passing the mixture to said filter to saturate combustion air passing therethrough, and a conduit connecting said chamber to the carburetor for passing the saturated air to the carburetor.

4,374,509
FIXTURE DEVICE FOR A DISTRIBUTOR
Takakazu Kawabata, and Seigo Hino, both of Toyota, Japan, assignors to Toyota Jidosha Kogyo Kabushiki Kaisha and Nippon Denso Company Limited, both of Kariya, Japan
Filed May 7, 1980, Ser. No. 147,619
Claims priority, application Japan, Jun. 23, 1979, 54-86181[U]
Int. Cl.³ F02P *5/04*
U.S. Cl. 123—146.5 A 15 Claims

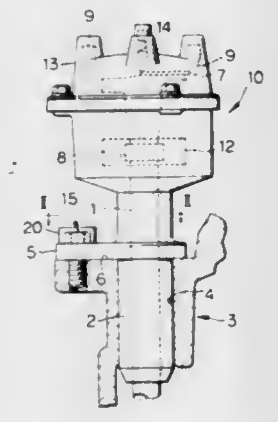

1. In a distributor for an internal combustion engine, a device including a tool for enclosing a head of a fixing bolt tightened at a selected position to hold a distributor flange in place, and engageable with said tool for providing access to said head, wherein said device comprises:

an outer cup member including a side wall, a first open end portion and a first substantially closed end portion including a bottom wall having a central bolt hole formed therethrough and fixed to said flange by said fixing bolt inserted through said bolt hole, said side wall having at least a first and second circumferentially spaced elastically yieldable tongue protruding inwardly toward said closed end; and

an inverted inner cut member including a side wall, a second open end portion and a second closed end portion, and received within said outer cup member with said second closed end portion located adjacent a side portion of said first open end portion of said outer cup member such that said inner cup member encases therein said head of said fixing bolt, said side wall of said inner cup member having at least one tongue-mating portion engaging each of said first and second tongue upon said inner cup member being forced into said outer cup member such that an outer surface of said side wall of said inner cup member and an inner surface of said side wall of said outer cup member define an annular clearance therebetween selected so as to permit engagement of said first and second tongue with said tongue-mating portion through elasticity of said tongue-mating portion, said annular clearance accommodating an annular portion of said tool adapted to release said engagement and remove said inner cup member by forcing said annular portion into said annular clearance, wherein said inner cup member upon being locked to said outer cup member through said engagement forms a detent-type bolt-head enclosure, such that access to said head is normally prevented unless said inner cup member is removed with said tool.

4,374,510
IGNITION TIMING CORRECTING SYSTEM FOR INTERNAL COMBUSTION ENGINE
Satoshi Komurasaki; Atsushi Ueda, and Tsuneo Yamane, all of Himeji, Japan, assignors to Mitsubishi Denki Kabushiki Kaisha, Tokyo, Japan
Filed Mar. 31, 1981, Ser. No. 249,458
Claims priority, application Japan, Apr. 3, 1980, 55/44406
Int. Cl.³ F02D *5/04*
U.S. Cl. 123—418 4 Claims

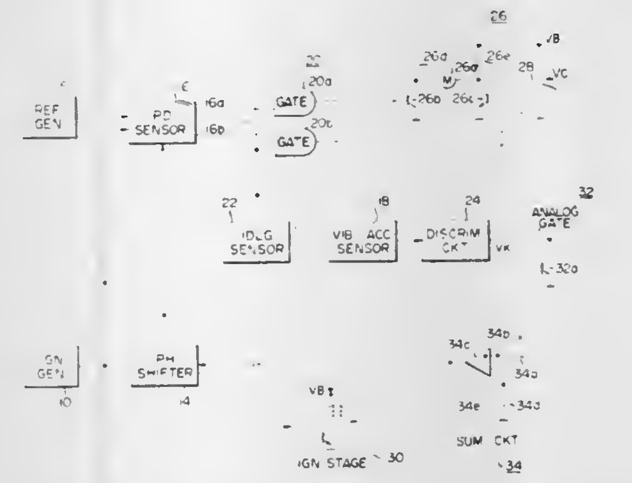

1. An ignition time correcting system for an internal combustion engine comprising a reference generator means for generating a reference signal at a reference angular position of the rotation of an internal combustion engine, an ignition generator means for generating a ignition signal at an angular position of the rotation of the engine leading that for said reference signal, said ignition signal having a predetermined advance characteristic, a phase shifter means connected to said ignition generator means to control a retardation of said ignition signal in response to a control input applied thereto, an ignition means connected to said phase shifter means to generate an ignition voltage with an output from said phase shifter means, a control signal generator means for generating a control signal for determining the retardation of said ignition signal provided by said phase shifter means, a control means for controlling a magnitude of said control signal in response to the phase relationship between said reference signal and said output from said phase shifter means so as to impart to said output from said phase shifter means a predetermined phase relative to said reference signal in a predetermined mode of operation of the internal combustion engine, a knocking sensor means for sensing a knocking status of the internal combustion engine, and a correction means connected said knocking sensor means to control a magnitude of said control input to said phase shifter means.

4,374,511
FUEL INJECTION PUMP WITH DISTRIBUTOR TYPE FUEL CONTROL
Michael M. Schechter, Southfield, Mich., assignor to Ford Motor Company, Dearborn, Mich.
Filed Dec. 22, 1980, Ser. No. 219,108
Int. Cl.³ F02M *39/00*
U.S. Cl. 123—448 9 Claims

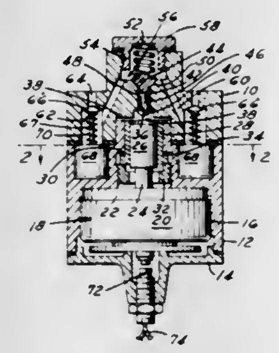

1. An automotive type internal combustion engine fuel injection pump including a housing having a central bore, a plunger reciprocably movable within the bore adjacent one end, a spring closed delivery control valve normally blocking the other end of the bore, a source of supply fuel under a first low pressure connected to the bore space between the plunger and valve for filling the space upon movement of the plunger away from the valve in a fuel intake stroke and for pressurization of the fuel to a level above the delivery valve spring force upon movement of the plunger towards the valve in a pumping stroke, a plurality of fuel outlet lines corresponding in number to the number of engine cylinders connected at one end to the bore downstream of the valve and connected at their other ends each to a separate engine cylinder, each of the outlet lines containing a fuel outlet valve normally closed to block fuel flow to the cylinders, each of the outlet valves having a solenoid connected thereto for moving the outlet valve to an open position upon energization of its solenoid, the solenoids being selectively energized one at a time to assure the injection of fuel into each cylinder on a one at a time schedule, force means to reciprocate the plunger, and stroke control means to variably control the stroke of the plunger to vary the duration and magnitude of injection of fuel to each of the outlet lines, the force means comprising a main solenoid having an armature connected to the plunger, the control means including electrical means to vary the voltage impulses to the main solenoid as a function of varying engine operating conditions to vary the duration and magnitude of pumping fuel by the plunger to agree with a predetermined schedule, the control means also energizing the fuel outlet line solenoids in sequence one at a time while deenergizing the remaining fuel outlet line solenoids to connect the output from the plunger past a different outlet valve upon each successive pumping stroke of the plunger.

4,374,512
INTERNAL COMBUSTION ENGINE HAVING PROVISIONS FOR HEATING THE FUEL-AIR MIXTURE PRIOR TO INJECTION INTO THE CYLINDERS
Victor Starun, 3111 Madison St., Wilmington, Del. 19802
Filed Dec. 23, 1980, Ser. No. 219,531
Int. Cl.³ F02M *23/04, 31/00*
U.S. Cl. 123—556 3 Claims

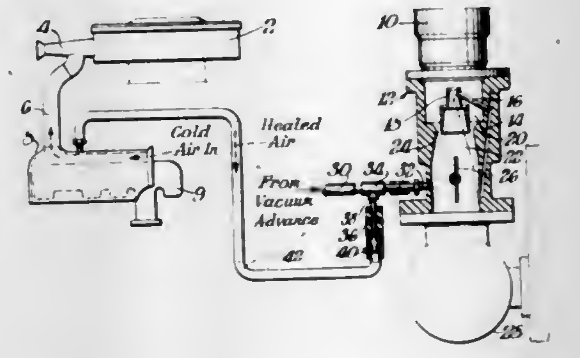

1. An attachment to an internal combustion engine having a carburetor means for forming a fuel-air mixture and a butterfly valve, an inlet manifold means for directing the fuel air mixture to cylinders for combustion of the fuel-air mixture and exhaust means for conveying hot combustion gases away from the cylinders, the improvement consisting of a means of injecting a metered quantity of air heated to a temperature of at least 150° F. to the carburetor means in a region in the venturi zone, said region extending from the butterfly valve to a point two inches below the butterfly valve comprising:

(a) a heater means for heating air to a temperature of at least 150° F.;
(b) first tube means for conveying said heated air to the carburetor means in said region in the venturi zone from the butterfly valve to a point two inches below the butterfly valve; and
(c) second tube means comprising either a PCV or a vacuum advance line connecting to the first tube means upstream of the point where the first tube means joins the venturi zone;
(d) a restrictor for metering a quantity of air flowing therethrough positioned in the second tube means comprising a tube with an internal orifice for the passage of heated air from a source of heated air, said tube having an upstream and a downstream end, said restrictor being positioned in said tube means at a pointdownstream of the heater and upstream of the carburetor means, said internal orifice having a diameter of 0.047 to 0.057 inch and said upstream and downstream ends of the restrictor being tapered inwardly to produce a jet action in the flow of heated air thereby causing said heated air to be injected into the carburetor means.

4,374,513
DRESSING APPARATUS FOR CUP-TYPE ABRASIVE WHEELS AS USED FOR GRINDING SPIRAL BEVEL GEARWHEELS
Dieter Wiener, Tulpenstr. 9, D-7505 Ettlingen-Bruchhausen, Fed. Rep. of Germany
Continuation-in-part of Ser. No. 104,071, Dec. 17, 1979, and a continuation of Ser. No. 904,883, May 11, 1978, abandoned. This application Oct. 23, 1980, Ser. No. 200,001
Claims priority, application Fed. Rep. of Germany, Aug. 4, 1978, 2834149
Int. Cl.³ B24B *53/14*
U.S. Cl. 125—11 CD 14 Claims

1. A dressing apparatus for dressing of a cup-type, abrasive, spiral bevel gear-grinding wheel having a concave conical grinding flank, a convex conical grinding flank and an axis of turning, comprising:

(A) means for holding said cup-type grinding wheel parallel to its axis of turning;
(B) a diamond abrasive dressing roller having an axis of symmetry and two conical dressing surfaces, one of which has a larger cone angle than the other;
(C) a dressing tool head for supporting said dressing roller arrangement;
(D) means for producing a first plunge cutting motion of said tool head, from a first position thereof, toward a said cup-type grinding wheel held by said means for holding, in a manner causing the conical dressing surface of said dressing roller having the larger cone angle to dress said

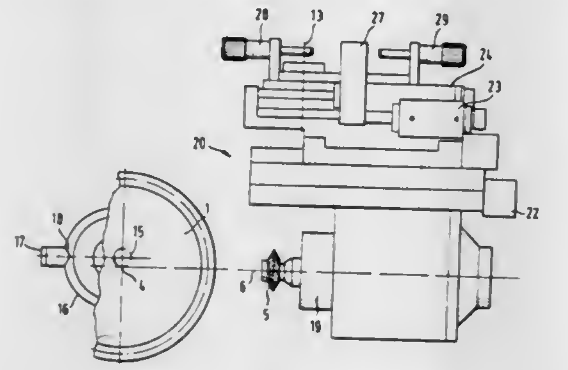

convex conical grinding flank of the grinding wheel and for producing a second plunge cutting motion of said tool head, from a second position thereof, toward said cup-type grinding wheel, in a manner causing the conical dressing surface of the dressing roller having the lesser cone angle to dress said concave conical grinding flank of the grinding wheel; and
(E) means for shifting said dressing tool head from said first position thereof to said second position thereof in a manner rocking said dressing roller about an axis at an angle relative to the axis of turning of said grinding wheel and the axis of symmetry of the dressing roller.

4,374,514
FIREPLACE HEATER STOVE
Harold W. Pierce, Ellicott City, Md.
Continuation-in-part of Ser. No. 59,658, Jul. 23, 1979, Pat. No. 4,320,741. This application Mar. 19, 1982, Ser. No. 360,076
The portion of the term of this patent subsequent to Oct. 28, 1997, has been disclaimed.
Int. Cl.³ F24C *1/14*
U.S. Cl. 126—123 **7 Claims**

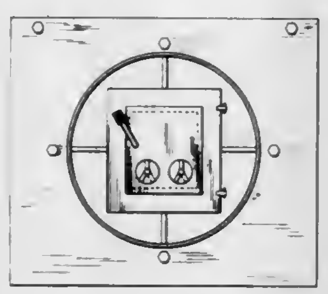

1. A heater stove which fits into a fireplace, the heater stove comprising:
a cylindrical firebox having (a) a front face, a back face, and a side wall, with a first closed-curve cross-section, extending between the front face and the back face and (b) an axis directed into the fireplace when the heater stove is within the fireplace;
an outer cylindrical shell having a side wall with a second closed-curve cross-section and a back wall, the shell surrounding and being spaced apart from the back face and the side wall of the firebox, the side wall of the shell and the side wall of the firebox having a gap therebetween, the gap including an opening at the front of the stove; and
means for angularly dividing the gap proximate the opening into a plurality of regions which extend a short length in the axial direction between the firebox side wall and the shell side wall, the regions including at least on lower region into which unheated air is drawn and at least one upper region from which heated air exits, air drawn through the at least one lower region (a) mixing with air flowing in other of the regions, (b) being heated by the firebox, and (c) then exiting through at least one of the at least one upper regions, air within the gap being heated by essentially the entire outer peripheral surface of the firebox.

4,374,515
FIREPLACE AIR DISTRIBUTION SYSTEM
Robert Conrad, P.O. Box 1004, Cedar Ridge, Calif. 95924
Filed Mar. 24, 1980, Ser. No. 133,460
Int. Cl.³ F24B *13/02*
U.S. Cl. 126—143 **4 Claims**

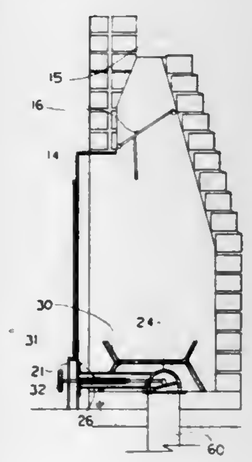

1. A fireplace combustion air assembly comprising an intake damper adapted to fit the ash pit opening and replace an ash pit door of a fireplace:
means mounting said intake damper for pivotable movement between a closed and open position and partial open positions therebetween;
means defining a chamber positioned over said damper with sufficient clearance to allow pivotable movement of said damper;
said chamber including at least one opening therein to allow combustion air to enter the firebox of a fireplace therethrough;
manual control means coupled to said intake damper for manually changing the position of said intake damper to control the quantity of combustion air introduced into said firebox via the ash pit opening; and
including thermostatic control means extending into said firebox and coupled to said intake damper for controlling the extent of opening of said intake damper as a function of the temperature within the firebox.

4,374,516
PLANAR DISC MAGNETIC ELECTRODE
William H. Harrison, 23341 Burbank Blvd., Woodland Hills, Calif. 91367
Continuation-in-part of Ser. No. 97,485, Nov. 26, 1979, abandoned. This application Feb. 23, 1981, Ser. No. 236,849
Int. Cl.³ A61N *1/40*
U.S. Cl. 128—1.3 **4 Claims**

1. In an electrode for use in the treatment of animal tissue by hyperthermia comprising electrically conductive material disposed to form a single-turn self-resonant loop including means for coupling to a supply of medically assigned radio frequency energy, the improvement comprising:
the electrically conductive material comprising a plurality of planar members being shaped in the form of partial annular disk segments, said members being disposed in overlap-

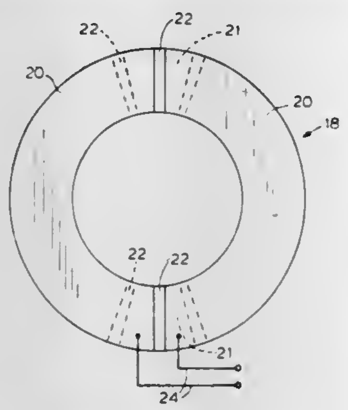

ping spaced relationship with a dielectric material disposed between overlapping portions to form an annular disk electrodes which is self-resonant at the medical frequency.

4,374,517
ENDOSCOPE TYPE HIGH FREQUENCY SURGICAL APPARATUS
Toshihiko Hagiwara, Hino, Japan, assignor to Olympus Optical Co., Ltd., Tokyo, Japan
Filed Jun. 3, 1981, Ser. No. 269,875
Claims priority, application Japan, Jun. 10, 1980, 55-79870[U]
Int. Cl.³ A61B *1/06*
U.S. Cl. 128—6 **4 Claims**

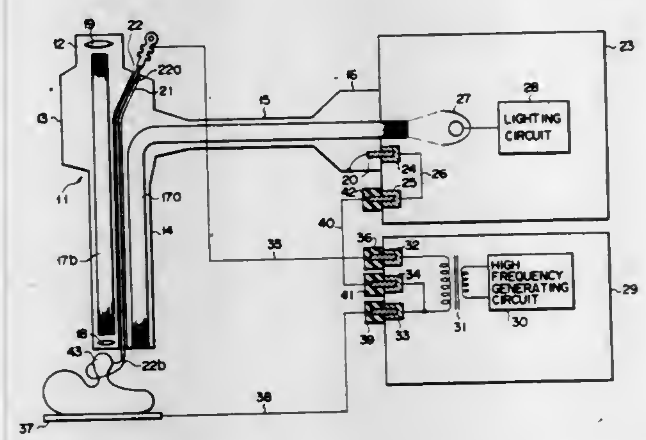

1. An endoscope type high frequency surgical apparatus which comprises:
an endoscope provided with a forceps channel, connector, metal section and high frequency current feedback contact which is mounted on the connector in electrical connection to the metal section;
a light supply unit to which the endoscope connector is detachably fitted, and which is provided with a light source and a high frequency current feedback terminal detachably connected to the high frequency current feedback contact in accordance with the connection and removal of said endoscope connector;
a high frequency powder supply source which generates high frequency surgical energy and is provided with an active output terminal and patient output terminal;
a diathermic snare means inserted into the forceps channel of the endoscope in contact with the active terminal;
patient electrode means connected to the patient output terminal; and
high frequency current feedback means for electrically connecting the feedback terminal of the light supply unit to the paient output terminal of the high frequency power supply source.

4,374,518
ELECTRONIC DEVICE FOR PNEUMOMASSAGE TO REDUCE LYMPHEDEMA
Raul Villanueva, 4102 Mischire, Houston, Tex. 77035
Filed Oct. 9, 1980, Ser. No. 195,515
Int. Cl.³ A61H *7/00*
U.S. Cl. 128—64 **3 Claims**

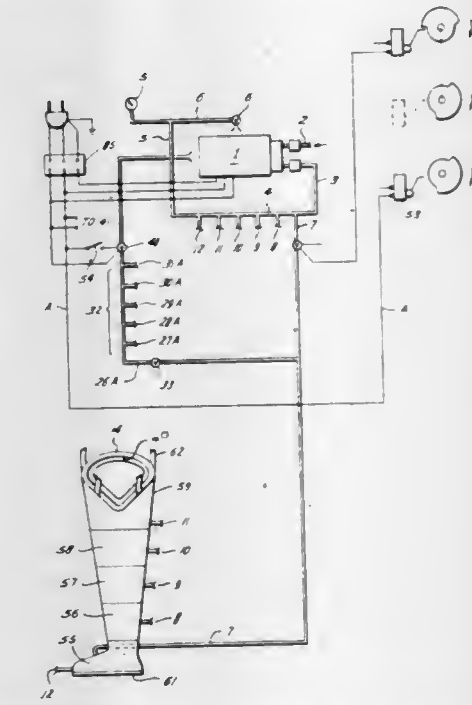

1. A device for pneumomassage of the limb of a patient, an outer boot having a series of compartments, the most distal of which conforms to the contours of a human foot with a rigid sole, an inner boot having a single compartment, both of said boots extending up to the hip girdle, means for anchoring the outer boot tightly about the body of the user to prevent longitudinal movement and rolling of the top of the boots, means for successively inflating and simultaneously deflating said compartments of the inner and outer boots in a rythmic, preselected cycle, means for maintaining the pressure for an indefinite period of time and for selectively releasing the pressure at any time during the cycle, said means for inflating said compartments of the boot comprises an air compressor with a thermally protected motor, a first manifold supplied with air from said compressor and maintained at a preselected pressure, electronically controlled solonoid valves, conduits leading from said manifold and terminating in said valves, a discharge manifold, and a second manifold of inflating conduits, conduits leading from said discharge manifold, check valves in said conduits, said conduits extending from said check valves and connected into the inflating conduits forming the second manifold, said solonoid valves in said inflating conduits adapted to allow the air to flow from the compressor to the boot compartments and said check valves adapted to maintain equal pressure within said conduits and manifolds, said check valves adapted to maintain the pressure within each individual compartment, a solonoid check valve in said discharge manifold and means for opening said solonoid valve leading from the discharge manifold and relieving the pressure within the boot.

4,374,519
SPINAL MASSAGE DEVICE
Amos K. Stauft, 23869 Van Born Rd., Taylor, Mich. 48180
Filed Nov. 17, 1980, Ser. No. 207,122
Int. Cl.³ A61H *15/00*
U.S. Cl. 128—57 **4 Claims**

1. A spinal massage device comprising:
an elongated linking plate having a first end and a second end;
a first resilient member and a second resilient member mounted on opposite faces of the first end of the linking plate, and means connecting the first resilient member and

the second resilient member such that they are disposed to be rotated together as well as with respect to one another;
a third resilient member and a fourth resilient member mounted adjacent opposite faces of the second end of the linking plate, and means connecting the third resilient and the fourth resilient member such that they are disposed to be rotated together, as well as with respect to one another;
the first resilient member and the third resilient member

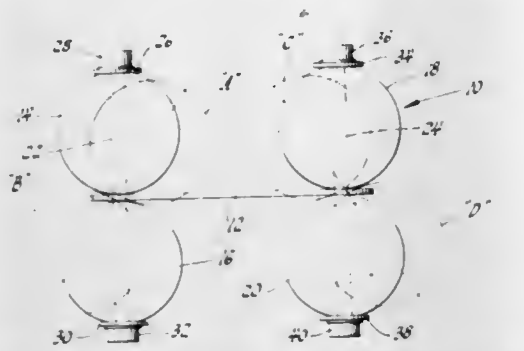

being mounted on the same side of the linking plate so as to be movable toward one another as the second resilient member and the fourth resilient member are moved away from one another; and
said first, second, third, and fourth resilient members each comprise resilient balls of equal diameter and in which the linking plate has a width less than the diameter of said balls whereby the user can roll his spine on the balls as they are rolled along a supporting surface.

4,374,520
SYSTEM AND METHOD FOR BANDAGING A PATIENT
Frederic Grossmann, Lake Forest, Ill., and Larry A. Sims, Hermosa Beach, Calif., assignors to American Hospital Supply Corporation, Evanston, Ill.
Filed Sep. 11, 1980, Ser. No. 186,352
Int. Cl.³ A61F *13/00*
U.S. Cl. 128—132 D **29 Claims**

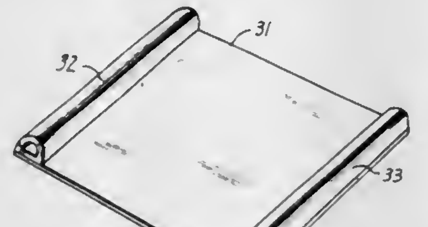

1. A system for bandaging a patient comprising:
a flexible bandage having a backing with an adhesive on a surface thereof for applying to a patient; and
a first and second handle means which are substantially stiffer than the bandage and are reversibly attachable to opposite edge areas thereof for maintaining said bandage in a generally flat configuration and for controlling wrinkling during handling and application of the bandage to the patient when attached thereto;
whereby the bandage may resume its flexible nature after application to the patient and removal of the first and second handle means, so as not to interfere with the flexible functioning of the bandage on the patient's anatomy.

4,374,521
SQUEEZE BAG TYPE RESUSCITATOR APPARATUS
Thomas W. Nelson, Lenexa, Kans., and Dennis L. Roehl, Kansas City, Mo., assignors to Puritan-Bennett Corporation, Kansas City, Mo.
Filed Sep. 12, 1980, Ser. No. 186,643
Int. Cl.³ A61M *16/00*
U.S. Cl. 128—205.13 **13 Claims**

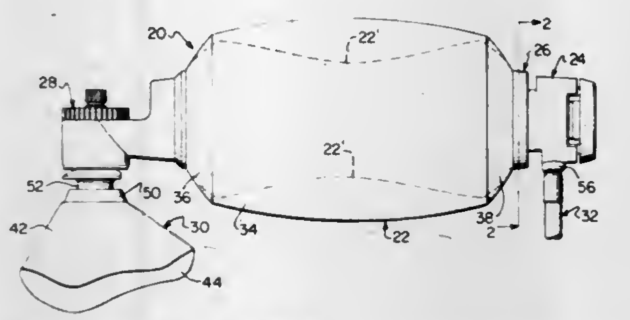

1. In resuscitator apparatus:
a manually distortable resilient, hollow squeeze bag assembly having a bag chamber therewithin whose volume varies with distortion thereof,
said bag assembly being provided with a pair of separate openings respectively adjacent opposite extremities thereof and in communication with said bag chamber;
a non-rebreathing valve assembly mounted on said bag assembly adjacent one of said extremities of the latter and having a first fluid port in communication with said bag chamber through one of said bag openings and a second fluid port;
a patient interfacing assembly in communication with said second port of said non-rebreathing valve assembly; and
a demand type oxygen supply valve assembly mounted on said bag assembly adjacent the other of said extremities of the latter and having an oxygen inlet adapted for connection with a source of oxygen under pressure, and an oxygen outlet arranged to communicate with said bag chamber through the other of said bag openings, said supply valve assembly including
housing structure having a hollow interior, a fluid inlet port adapted for coupling with a source of oxygen under pressure, a fluid outlet port adapted for communicating with an outlet chamber subject to fluid pressure variation therewithin in response to the withdrawal of fluid therefrom, and first and second atmospheric vent ports for communicating with the exterior of said housing structure;
means including a partition and a pair of differential pressure responsive diaphragms dividing the interior of said housing structure into a plurality of internal chambers,
one of said diaphragms being between the first and second of said internal chambers,
said partition being between the second and third of said internal chambers,
the other of said diaphragms being between the third and fourth of said internal chambers,
said inlet port being in continuous communication with said fourth internal chamber;
first valve means including a valve member carried by said one diaphragm and a valve passage through said partition for selectively placing said second internal chamber in fluid communication with said third internal chamber;
second valve means including a valve member carried by the other of said diaphragms and a valve passage through said housing structure for selectively placing said fourth internal chamber in fluid communication with said outlet chamber;
a fluid passage within said housing structure for placing said first internal chamber in fluid communication with said outlet chamber;
a fluid passage within said housing structure for placing said second internal chamber in fluid communication with said first vent port;

a fluid passage within said housing structure for placing said outlet chamber in fluid communication with said second vent port; and
differential pressure responsive valve means oppositely communicating with said fourth internal chamber and said outlet chamber, also oppositely communicating with said fourth internal chamber and said second vent port, responsive to a positive pressure of at least a predetermined level within said fourth internal chamber for normally closing said passage between said outlet chamber and said second vent port, and responsive to a pressure of less than said predetermined level within said fourth internal chamber for opening said passage between said outlet chamber and said second vent port.

4,374,522
TAMPON WITH CENTRAL RESERVOIR
Howard Olevsky, Appleton, WI, assignor to Kimberly-Clark Corporation, Neenah, Wis.
Filed Mar. 16, 1981, Ser. No. 244,070
Int. Cl.³ A61F *13/20*
U.S. Cl. 128—285 **5 Claims**

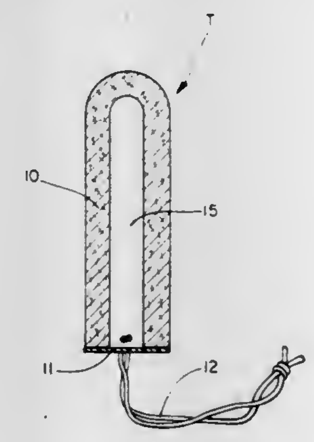

1. A tampon comprising a compressed bullet-shaped absorbent pledget having a tapering leading edge, a hollow central core, said pledget in fluid conductive contact with said core, a fluid impermeable layer attached to the base of the pledget to seal the central core area, and a withdrawal means attached to said impermeable layer.

4,374,523
OCCLUSION RING APPLICATOR
In B. Yoon, 2213 Forest Ridge Rd., Timonium, Md. 21093
Continuation-in-part of Ser. No. 518,617, Oct. 29, 1974, Pat. No. 3,989,049. This application Aug. 15, 1975, Ser. No. 605,217
The portion of the term of this patent subsequent to Mar. 11, 1992, has been disclaimed.
Int. Cl.³ A61B *17/12, 1/06*
U.S. Cl. 128—326 **55 Claims**

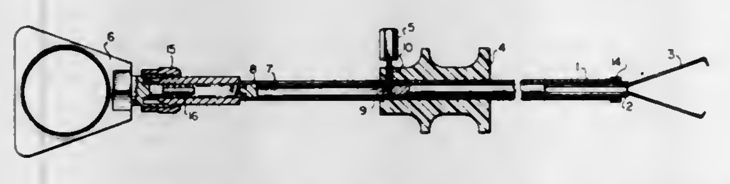

1. A ring applicator device for use in applying an elastic occluding ring to an anatomical tubular structure which comprises an inner cylinder and an outer cylinder, said inner cylinder being slidably disposed within said outer cylinder, forceps means slidably disposed within said inner cylinder and operating slide means operatively associated with the forceps means and the inner and outer cylinders for distally displacing the forceps means relative to the inner cylinder and the forceps means and the inner cylinder relative to the outer cylinder as the result of a single continuous movement of said operating slide means toward the distal end of the ring applicator.

4,374,524
ELECTROMEDICAL APPARATUS FOR INTERFERENCE CURRENT TREATMENT
Karl Hudek, deceased, late of Erlangen, Fed. Rep. of Germany by Amanda Hudek, Gerd Hudek, Kurt Hudek, heirs, and Bernd Kusserow, Erlangen, Fed. Rep. of Germany, assignors to Siemens Aktiengesellschaft, Berlin & Munich, Fed. Rep. of Germany
Filed Aug. 4, 1980, Ser. No. 174,853
Claims priority, application Fed. Rep. of Germany, Aug. 3, 1979, 2931638
Int. Cl.³ A61N *1/36*
U.S. Cl. 128—420 A **8 Claims**

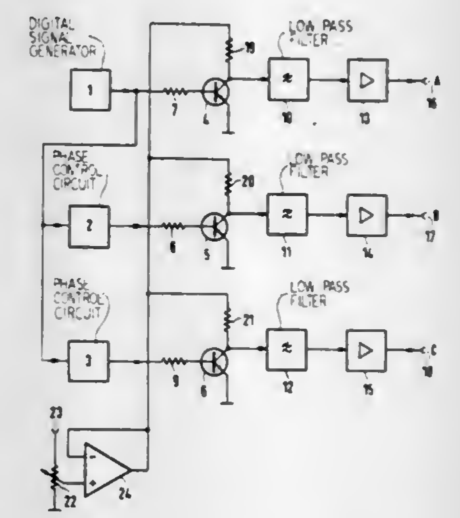

1. Electromedical apparatus for interference current treatment comprising at least two current circuits having current circuit output means adapted to be coupled to a patient for the purpose of interference current treatment, generator means activating the current circuits with signal frequencies of timing characteristics for effecting interference current treatment via said current circuit output means, each current circuit having a switching transistor (4, 5, 6) connected with said generator means, the transistors (4, 5, 6) having respective collector circuits for supplying collector voltages to the switching transistors, the signal frequencies from the generator means serving to operate the transistors in a switching mode such that the collector voltage of each transistor successively switches between a zero value and an operating voltage value, common control means connected with all of said collector circuits and comprising a single voltage source (23) and a common control circuit (22, 24) having an adjustable common control element means (22) for controlling the activating voltage supplied to each collector circuit so that all switching transistors (4, 5, 6) are activated on the collector side from said single voltage source (23) via said common control circuit (22, 24), and so that the magnitudes of the collector output signals of all of the switching transistors (4, 5, 6) are synchronously adjustable in dependence upon the setting of the common control element means (22), the common control element means being a potentiometer (22) connected with said single voltage source (23), said common control circuit further comprising an operational amplifier (24) having feedback circuit means providing an output-to-input current path and thereby providing a low-resistance output from said operational amplifier connected with all of said collector circuits, said operational amplifier having an amplifier input means connected with said potentiometer (22), said amplifier input means being connected with said single voltage source (23) under the control of said potentiometer (22), said current circuits further having low pass filters (10, 11, 12) having filter inputs connected with the collectors of said transistors (4, 5, 6) and having filter outputs connected with said current circuit output means for supplying

sinusoidal signals in accordance with the frequency and phase of the signal frequencies.

4,374,525
ULTRASONIC DIAGNOSTIC APPARATUS FOR ENDOSCOPE

Kazuo Baba, Hachioji, Japan, assignor to Olympus Optical Co., Ltd., Tokyo, Japan

Filed Apr. 27, 1981, Ser. No. 258,004
Claims priority, application Japan, Apr. 28, 1980, 55-56868
Int. Cl.³ A61B *10/00*
U.S. Cl. 128—660 **7 Claims**

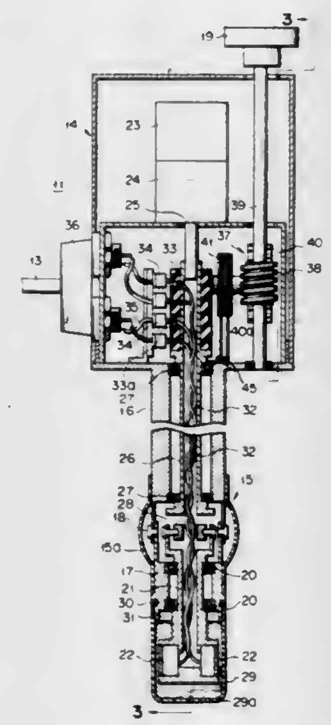

1. An ultrasonic diagnostic apparatus comprising: an insert section including at least a rigid base tube and a rigid distal tube bendably coupled with each other by at least one hinge means, first and second rotation shafts rotatably disposed in said rigid base and distal tubes respectively and coupled with each other by at least one universal joint, and ultrasonic transducer means including an ultrasonic scanning member disposed at the distal end of said rigid distal tube and attached to the distal end of said second rotation shaft; and

a control section including a rotation driving source for supplying rotation driving force to said first and second rotation shafts and a bending drive means for driving said distal tube to bend.

4,374,526
HEARING FACULTY TESTING AND APPARATUS THEREFOR

David T. Kemp, Hatfield, England, assignor to National Research Development Corporation, London, England

PCT No. PCT/GB79/00030, § 371 Date Oct. 10, 1979, § 102(e) Date Aug. 14, 1979, PCT Pub. No. WO79/00614, PCT Pub. Date Sep. 6, 1979
PCT Filed Feb. 9, 1979, Ser. No. 230,957
Claims priority, application United Kingdom, Feb. 10, 1978, 5467/78
Int. Cl.³ A61B *5/12*
U.S. Cl. 128—746 **12 Claims**

1. Hearing faculty apparatus comprising:

an aural probe for insertion in the external canal of a subject's ear,

an electroacoustic transducer detector mounted in said probe to generate signals in response to sound pressure waves returned through said canal by reflection within the associated inner ear and reaction elsewhere, and

signal separation means connected with said transducer to extract, for retention from said signals, components thereof

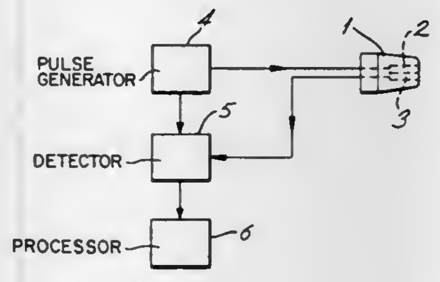

representing substantially exclusively only said inner ear reflection.

4,374,527
BODY STIMULATION LEAD

Alfred A. Iversen, Minnetonka, Minn., assignor to Medtronic, Inc., Minneapolis, Minn.

Filed Jul. 19, 1978, Ser. No. 926,100
Int. Cl.³ A61N *1/04*
U.S. Cl. 128—785 **29 Claims**

1. In a body stimulator of the type having electrode means, connector means and lead body means extending between said electrode means and connector means, said lead body means including conductor means and conductor means insulating means, the improvement wherein said lead body means comprises means for deforming in compression and elongation in response to extraneous forces imparted to said lead body means to isolate said electrode means therefrom, said deforming means comprising lobe means formed within said lead body means.

4,374,528
ROTARY IGNITION SYSTEM FOR A CATALYTICALLY HEATED CURLING DEVICE

Curt Tittert, Dreieich-Götzenhain, Fed. Rep. of Germany, assignor to Braun Aktiengesellschaft, Kronberg, Fed. Rep. of Germany

Filed Jul. 10, 1981, Ser. No. 282,332
Claims priority, application European Pat. Off., Sep. 30, 1980, 80105922.1
Int. Cl.³ A45D *2/24*
U.S. Cl. 132—37 R **8 Claims**

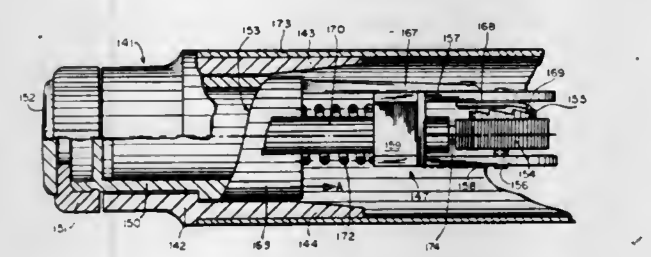

1. In a curling device having a tubular body defining a heating chamber therein, and having first and second ends and a hair winding portion disposed between the first and second ends and surrounding the heating chamber, heating means including a catalyst means disposed in the heating chamber, a housing member proximate the tubular body including fuel supply means for storing a fuel in a liquid state, and aspirating means coupled between the fuel supply means and the heating

chamber for vaporizing the fuel and for mixing the vaporized fuel with air and for supplying a vaporized fuel/air mixture to said catalyst means, and self-contained ignition means mounted in the first end of the tubular body proximate the catalyst means for initiating oxidation of the vaporized fuel/air mixture in the presence of the catalyst means and including a manually rotatable member having a ring member connected to a lobed member having cam surfaces, mounted in said ignition means and having an axis of rotation substantially parallel or concomitant to the longitudinal axis of the tubular body, a friction wheel mounted in said ignition means having an axis of rotation substantially perpendicular to the longitudinal axis of the tubular body, flint means mounted in said ignition means and including a flint biased against said friction wheel wherein a predetermined rotation of said friction wheel against said flint causes a spark, the improvement comprising:

a one-piece bushing member having a cylindrical portion disposed in a hollow interior of said lobed member and a cam follower portion and a tappet portion having a free end rigidly connected to said cam follower portion, said cam follower portion having matching cam surfaces to said cam surfaces of said lobed member, said free end of said tappet portion cooperating with said friction wheel for translating the rotary motion of said rotatable member to a rotary motion of said friction wheel, wherein said bushing member is displacable along the longitudinal axis of the ignition means.

4,374,529
COIN DISPENSING APPARATUS

Osamu Kobayashi, and Masanori Tanaka, both of Sakato, Japan, assignors to Kabushiki Kaisha Nippon Coinco, Tokyo, Japan

Filed Sep. 25, 1980, Ser. No. 190,743
Claims priority, application Japan, Oct. 8, 1979, 54-139463[U]; Oct. 8, 1979, 54-139465[U]
Int. Cl.³ G07D *1/02*
U.S. Cl. 133—4 A **9 Claims**

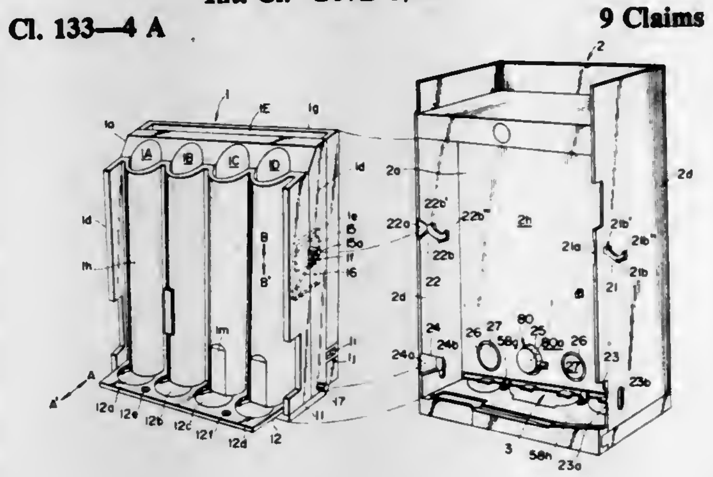

1. A coin dispensing apparatus comprising:

a coin tube assembly made up of a plurality of coin tubes which are juxtaposed as one unit;

a housing in which said coin tube assembly is detachably mounted;

a pay-out slide having holes for receiving and holding the bottom coins in said coin tubes;

a coin base provided below aid pay-out slide, for supporting the coins in said coin tubes; and

dispensing coin selection control means for causing only a predetermined one of the coins which have been taken out by said pay-out slide to drop and the remaining ones to return to positions below the stacks of coins in said coin tubes, respectively.

4,374,530
FLEXIBLE PRODUCTION TUBING

John B. Walling, P.O. Box 16266, Fort Worth, Tex. 76133

Filed Feb. 1, 1982, Ser. No. 344,601
Int. Cl.³ F16L *11/08*
U.S. Cl. 138—110 **8 Claims**

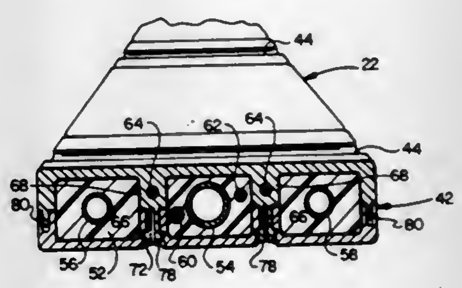

1. A composite, flexible tubing assembly for conveying formation fluid out of a well comprising, in combination:

an injection body of high tensile strength, flexible material defining an elongated core;

elongated production tubing embedded in said core; and,

a plurality of striker plate assemblies partially embedded within said core, each striker plate assembly having an exposed face and a groove in said face extending transverse to the longitudinal axis of said core, said plates being axially spaced with respect to each other along the length of said core whereby the grooves of said striker plates can be engaged successively by the teeth of a drive sprocket.

4,374,531
MULTIPLE CASTING HEAD

Alfred Heinzl, and Heinz Stadler, both of Munich, Fed. Rep. of Germany, assignors to Siemens Aktiengesellschaft, Berlin & Munich, Fed. Rep. of Germany

Filed Nov. 3, 1980, Ser. No. 203,324
Claims priority, application Fed. Rep. of Germany, Nov. 9, 1979, 2945403
Int. Cl.³ B65B *3/14*
U.S. Cl. 141—82 **7 Claims**

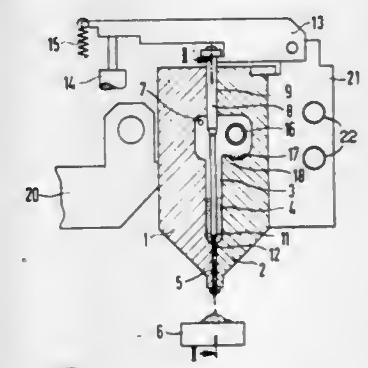

1. A multiple casting head comprising:

a housing consisting solely of two separable halves divided by a vertical plane;

a means for maintaining said separable halves of said housing in fluid-tight adjacent relation;

a feed chamber in said housing;

a means for introducing casting compound into said feed chamber;

a plurality of discharge nozzles disposed in a row in said housing in communication with said feed chamber;

a means for introducing compressed air into said feed chamber for discharging said casting compound;

a plurality of valves individually movable to respectively open and close said discharge nozzles said valves and said discharge nozzles being divided by said plane such that when said halves of said housing are separated said valves and the interiors of said discharge nozzles are accessible for cleaning; and

a means associated with each said valve for individually controlling said valve for precisely supplying selected differing amounts of said casting compound to respective containers disposed beneath said discharge nozzles.

4,374,532
WOOD SPLITTING DEVICE
James A. Region, Rte. 2, Box 143BX, Sheridan, Ill. 60551
Filed Apr. 27, 1981, Ser. No. 257,823
Int. Cl.³ B27L *7/00*
U.S. Cl. 144—193 A **20 Claims**

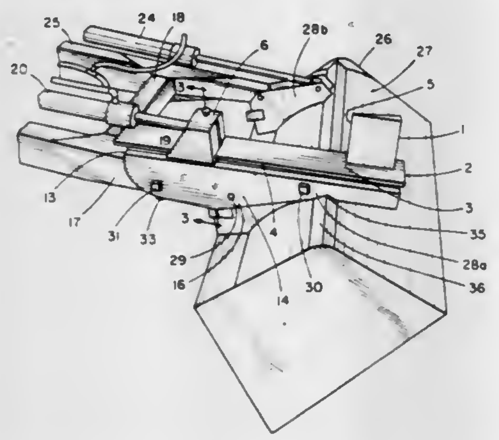

1. A log splitting device for connection to a powered machine mounted implement which has at least one powered reciprocating arm to manipulate said implement, such reciprocating arm being disconnectible from said implement, said log splitting device including a mounting frame for connection to said powered machine mounted implement, log splitting means on said mounting frame in alignment with said one powered reciprocating arm when said log splitting device is connected to said powered machine mounted implement, said mounting frame including elongated track means extending along said mounting frame at a location between said log splitting means and said one powered reciprocating arm when said log splitting device is connected to said powered machine mounted implement, a ram head slidingly and captively mounted on said track means for reciprocal movement between a retracted position away from said log splitting means and an extended position toward said log splitting means, said ram head being connected to said one powered reciprocating arm to drive said ram head between said retracted and said extended positions, wherein said powered machine mounted implement is a tractor mounted end loader having a pair of extending lifting arms connected to a bucket for raising and lowering said bucket, said end loader including a pair of hydraulically powered reciprocating arms each positioned in spaced apart relationship with respective ones of said pair of lifting arms and each connected to said bucket to pivot said bucket on said lifting arms between a turned-upright and a turned-over position, said one powered reciprocating arm being one of said pair of hydraulically powered reciprocating arms, and rigid immobilizing connecting means to rigidly connect said mounting frame of said log splitting device to one of said lifting arms and to said bucket to immobilize said bucket and prevent pivoting thereof on said lifting arms when said one reciprocating arm is connected to said ram head of said log splitting device.

4,374,533
APPARATUS FOR DEBARKING LOGS AND CUT TIMBER
Sven A. Svensson, Myckling, Sweden, assignor to Mo och Domsjo Aktiebolag, Ornskoldsvik, Sweden
Filed Jan. 22, 1981, Ser. No. 227,301
Claims priority, application Sweden, Feb. 5, 1980, 8000917
Int. Cl.³ B21L *1/00*
U.S. Cl. 144—208 B **11 Claims**

1. Apparatus for debarking logs and cut timber, comprising a debarking drum rotatable in either direction and having an inlet at one end and an outlet at the other end; a plurality of lifter means shaped and disposed on an interior wall of the drum in a manner to engage and lift logs and cut timber with rotational movement of the drum in either direction; a conveyor feeding logs and cut timber into the interior of the debarking drum; the conveyor being movable between a first

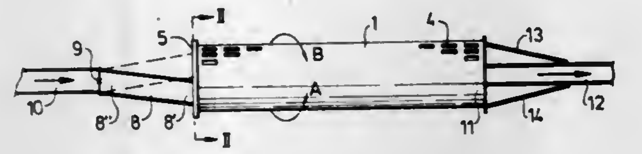

position and a second position with respect to the inlet and the center axis of the debarking drum; and means for driving the drum in one direction when the conveyor occupies the first position, and in the opposite direction when the conveyor occupies the second position, so as to wear the lifter means more evenly.

4,374,534
TURBINE VENTILATOR COVER
Victor H. Jespers, 1001 Silverdale, Wichita, Kans. 67218, and Douglas A. Hillen, 5960 B Mendocino Dr., Dallas, Tex. 75248
Filed Sep. 22, 1980, Ser. No. 188,780
Int. Cl.³ B65D *37/00*
U.S. Cl. 150—52 R **7 Claims**

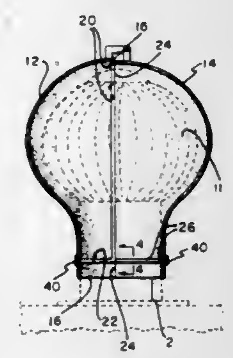

1. A cover for covering a turbine ventilator or the like comprising a cover body having a base; said cover body including a first body member having a first body edge and a first body base edge, and a second body member having a second body edge and a second body base edge; a first body internal seal generally traversing and bound to a portion of the internal surface of said first body in proximity to the periphery of said first body edge; a first body base seal essentially circumscribing and bound to a portion of the internal surface of the base of said first body in general proximity to said first body base edge; a second body base seal similarly circumscribing and similarly bound to a similar portion of the internal surface of the base of said second body as said first body and in general proximity to said second body base edge; said first body member when combining with said second body member to enclose said turbine ventilator or the like to protect same from the weather having said second body edge contacting said first body internal seal, and said first body base seal and said second body base seal joining together to essentially seal the base of the cover body to the base of the turbine ventilator or the like.

4,374,535
WHEEL WELL FILLER
George T. Watts, North Canton, Ohio, assignor to The Goodyear Tire & Rubber Company, Akron, Ohio
Continuation of Ser. No. 618,258, Sep. 30, 1975, abandoned. This application Jan. 18, 1978, Ser. No. 870,367
Int. Cl.³ B60C *17/00*
U.S. Cl. 152—381.6 **3 Claims**

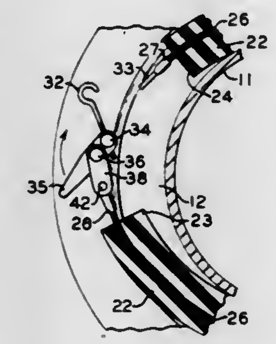

1. A wheel well filler and rim assembly for mounting a pneumatic tire of the type having a U-shaped cross section and bead portions at the edges comprising a generally cylindrical rim having bead seats and an annular wheel well between said bead seats, said bead seats having a greater diameter than said wheel well, a wheel well filler of flexible, resilient material disposed in said well, said filler having a depth not greater than the depth of said well and a length less than the circumference of said well providing a gap in said well between spaced-apart ends of said filler, an inextensible reinforcing member extending circumferentially of said well and being molded in said filler, said reinforcing member having a circumference substantially the same as the circumference of said rim at said well, and a tension-applying over-center latch positioned in said gap and fastened to one of the spaced-apart ends of said reinforcing member and in detachable engagement with the other of said spaced-apart ends to form a circumferentially continuous ring, said wheel well filler and reinforcing member forming a one-piece assembly for mounting in said wheel well with said latch as a unit, said latch having a depth not greater than the depth of said well so that said filler including said latch has a diameter not greater than the diameter of said bead seats, and placing said ring and said reinforcing member under tension whereby said filler is pressed against said rim for application of said over-center latch and retention of said filler in said well without turning relative to said rim during rotation of said assembly.

4,374,536
ENERGY SAVING WINDOW SCREEN GUIDE DEVICE
Sharon L. Becker, R.R. #2, SH 109, Delta, Ohio 43515
Filed Sep. 5, 1980, Ser. No. 184,285
Int. Cl.³ E06B *3/94*
U.S. Cl. 160—84 R **8 Claims**

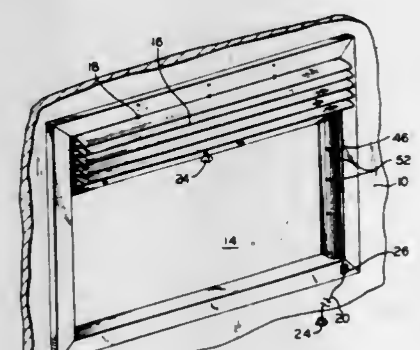

1. In a window opening having frame members defining the opening and containing the marginal edges of a transparent panel and a flexible screen for covering and uncovering the panel, the improvement comprising:

longitudinally extending track means mounted to extend in parallel spaced relation along at least two parallel spaced apart members of the window opening, said track means having longitudinally extending grooves;

guide means being received by the grooves of said track means enabling said guide means to slide along the longitudinal axis of said track means;

longitudinally extending seal means mounted to extend substantially the entire length of said track means, said seal means including a substantially continuous sealing strip positioned on the outer side of said track grooves and said guide means, said sealing strip having an outer marginal edge and an inner marginal edge, the inner marginal edge secured to said track means and the outer marginal edge terminating in spaced parallel relation to said track means; and

means connecting at least two longitudinally spaced apart edge portions of the screen to respective guide means, said connecting means being spaced inwardly from the associated marginal edge of the screen for effectively causing the associated marginal edge of the screen to extend outwardly past said associated track means and abut against the outer marginal edge of said sealing strip to militate against the flow of air therethrough.

4,374,537
COLLAPSING CLOSURE SYSTEM AND OPERATING MECHANISM
Charles Lindbergh, 10 S. Basilica, Charleston, S.C. 29406
Continuation-in-part of Ser. No. 89,944, Oct. 31, 1979, Pat. No. 4,303,117. This application Sep. 8, 1980, Ser. No. 185,258
Int. Cl.³ E05D *15/26;* **E05F** *1/04, 11/06*
U.S. Cl. 160—189 **25 Claims**

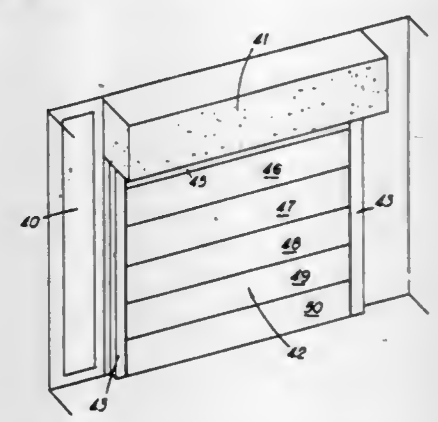

1. In a collapsing closure system, a closure including plural equal width panel sections which are hingedly connected along parallel hinge axes to allow overhead collapse and storage of the closure in a compact form and downward extension thereof, linear and upper diversionary guide track means for said closure, and coacting guide roller means for said closure engaging said linear and diversionary guide track means, said guide roller means including opposite side guide roller pairs for the closure located on the hinge axes of said closure panel sections except for two pairs of the guide rollers of two intermediate panel sections which are displaced in a common direction and unequally from the lower hinge axis of the panel sections carrying said two pairs of guide rollers.

4,374,538
APPARATUS FOR DECORING AND EXPLOSIVE TREATMENT OF MATERIALS

Warren A. Rice, Dexter, Mich., assignor to Robert Bosch GmbH, Stuttgart, Fed. Rep. of Germany
Filed May 16, 1980, Ser. No. 150,606
Int. Cl.³ B22D *29/00*
U.S. Cl. 164—401 **1 Claim**

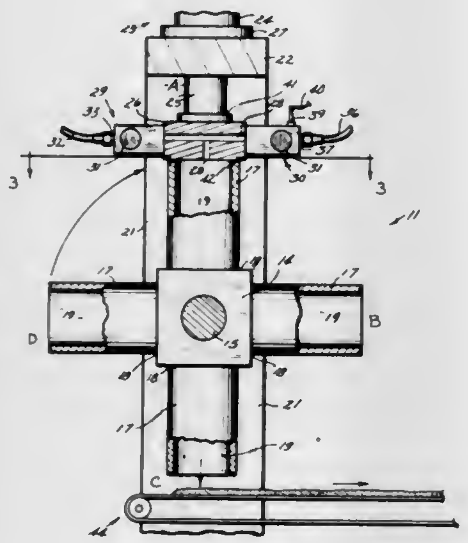

1. An apparatus for confined explosion decoring of castings comprising:
a machine frame having a pair of upstanding legs;
a web bridging said legs of said frames at a top location thereof so that said frame is in the form of an inverted U;
a rotor block rotatably mounted between said legs;
a plurality of chambers fixed to said rotor block and radially extending therefrom movable in a vertical plane with said block, said chambers rotating on an axis journalled in the legs of said frame and between the legs of said frame;
plural stations radially related to said rotor block including an ignition station at the web having
a closure plate engageable with said chambers, and a linear actuator secured to said web and connected to said closure plate for closing said closure plate against a chamber facing the closure plate;
an unloading station;
a dumping station at a bottom location; and
a loading station, said chambers being open at all of said stations except at said ignition station;
said closure plate and said linear actuator at said ignition station being situated on a radial line through the axis of successively and registrably located chambers and including plural communicating passages therethrough;
valve means selectively opening and closing flow into and out of said passages and into and out of said chambers as successively presented;
an igniter device connectable to said chambers when closed by the closure plate;
conduits to and from said valves for control of flow of combustion gas and oxygen, vacuum, and purge to said chambers as successively presented;
and an index drive driving said rotor block to successive stations;
said rotor block being journalled on a horizontal axis through said frame, so that said frame absorbs stresses at said journals as generated by closure of the chamber at the top location by the linear actuator and by explosion stresses in said chambers upon ignition of the combustion gas and oxygen.

4,374,539
PLATE MOLD FOR THE CONTINUOUS CASTING OF METALS

Enzo Colombo, Udine, Italy, assignor to Continua International Continuous Casting S.p.A., Ferrara, Italy
Filed Jun. 18, 1980, Ser. No. 160,545
Claims priority, application Italy, Jun. 22, 1979, 12652 A/79
Int. Cl.³ B22D *11/00*
U.S. Cl. 164—443 **5 Claims**

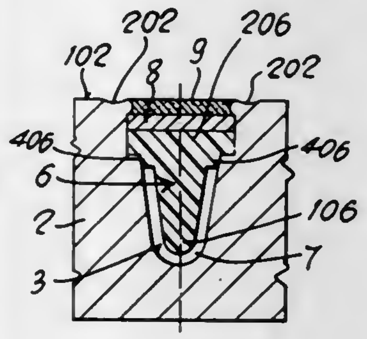

1. A mold plate of a plate mold used in the continuous casting of metal, comprising a heat conductive plate having an outer surface and an opposite surface substantially exposed to the casting metal, said plate including a groove defined in the outer surface thereof, the groove including a base portion; a thermoresistant plastic insert bar disposed in said groove and being shaped and dimensioned to define a flow passage between the insert bar and an inner surface of the groove for circulating a cooling medium therethrough, said flow passage being of reduced flow section relative to a corresponding section of said groove; closure means encased within the base portion of said groove the base portion being located outwardly from and adjacent in outer surface of said insert bar, said closure means including a closure plate being encased in the base of said groove so as to be recessed within the groove so as to firmly secure said insert bar in said groove; and means for sealing and securing said closure plate to said mold plate, said sealing means including a low melting point alloy filled in a space defined by the recessed area formed by an outer surface of the closure plate and the base portion of the groove.

4,374,540
PNEUMATIC TRANSPORT AND HEAT EXCHANGE SYSTEMS

Lester G. Massey, Moreland Hills, Ohio; Lawrence G. Clawson, Dover, and Andrew J. Syska, Marblehead, both of Mass., assignors to Consolidated Natural Gas Service Company, Inc., Pittsburgh, Pa.
Continuation-in-part of Ser. No. 942,677, Sep. 15, 1978, abandoned. This application Sep. 7, 1979, Ser. No. 76,289
Int. Cl.³ F28D *19/02*
U.S. Cl. 165—1 **58 Claims**

1. A method of heat exchange between gaseous media and a particulate material which provides a heat exchange surface as it is circulated between first and second vessels for direct heat transfer with gaseous media comprising respectively withdrawing said particulate material from said vessels through first and second downcomers and transferring said particulate material to associated lift lines, pneumatically conveying said particulate material to said first vessel with a first gaseous stream flowing through one of said lift lines and to said second vessel with a second gaseous stream flowing through the other of said lift lines, each of said streams undergoing a pressure drop during the pneumatic conveyance of said particulate material, cocurrently transferring heat between said particulate material and gaseous stream in each of said lift lines, separating said particulate material from each of said gaseous streams and respectively collecting said particulate material in

said vessels, and transferring heat between said gaseous streams as a function of the flow rate weight ratios of said

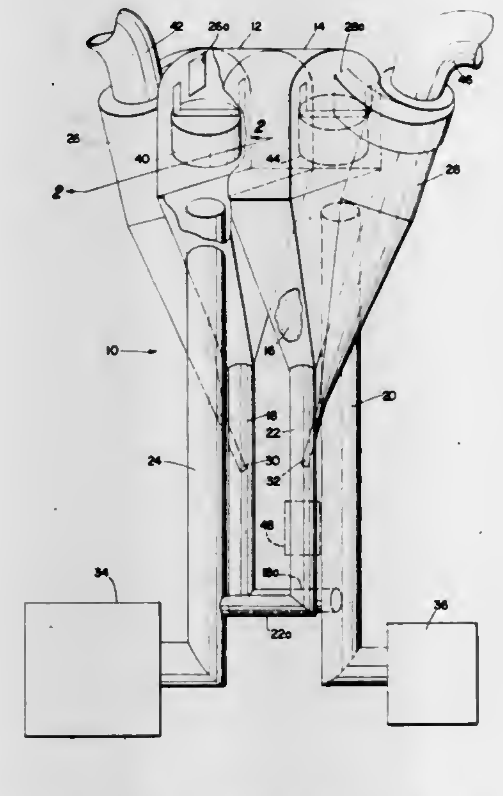

particulate material to said gaseous stream in each of said lift lines and the flow rate weight ratio of said gaseous streams.

4,374,541
TEMPERATURE CONTROL SYSTEM FOR CONSERVING ENERGY

Max Hoberman, 943 Prince St., Teaneck, N.J. 07666
Filed Mar. 12, 1981, Ser. No. 243,050
Int. Cl.³ F25B *29/00;* H01H *37/72*
U.S. Cl. 165—26 **9 Claims**

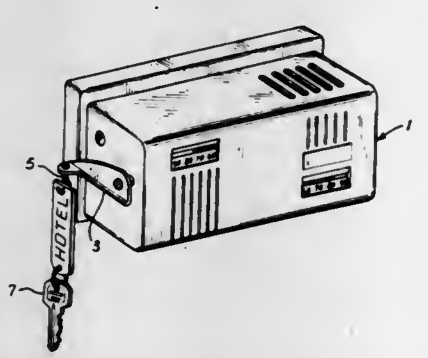

1. In a thermostat device for controlling heating and cooling systems having a temperature responsive element mounted to move an arm which opens and closes electrical contacts to initiate and interrupt the operation of heating and cooling apparatuses the improvement comprising
(a) means to increase the force required to operate the arm comprising spring members which are moved into the path of motion of the arm and cause the arm to need additional force applied to produce the required motion to open and close the electrical contacts, and
(b) means to control selectively the operation of the force increasing means, whereby the thermostat device will operate in conventional fashion when means (a) is not selected by means (b) to increase the force required to operate the arm, but whereby the thermostat device will have its set point temperature changed when means (a) is selected by means (b) to increase the operating force.

4,374,542
UNDULATING PRISMOID MODULES

Joel C. Bradley, Rio Mississippi 107 Ote. Aptdo. 85, col. Del Valle, San Pedro, Garza Garcia, N.L., Mexico
Filed Oct. 17, 1977, Ser. No. 843,054
Int. Cl.³ F28F *3/12*
U.S. Cl. 165—166 **7 Claims**

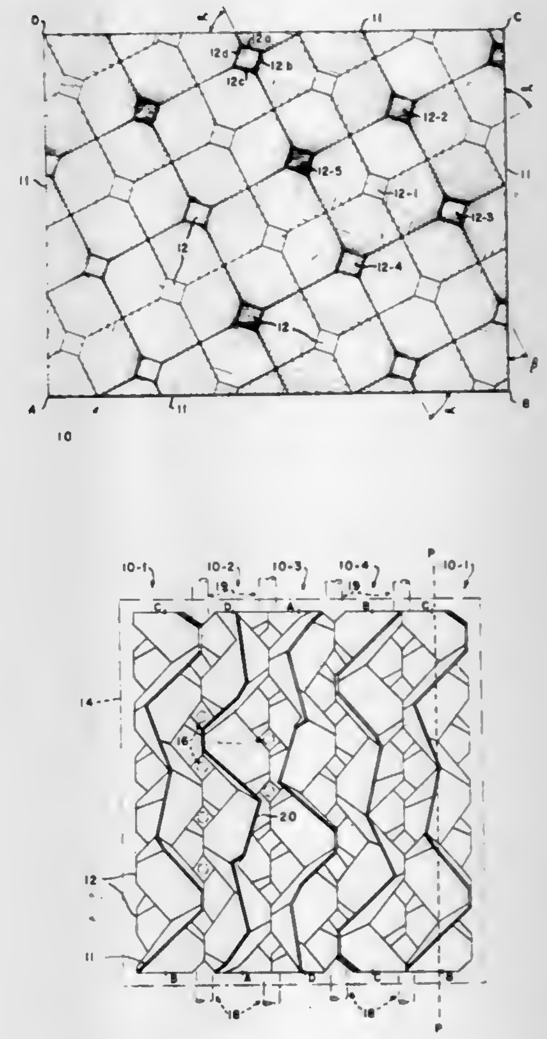

1. A stack of substantially identical undulating prismoid modules, each undulating prismoid module having a polygon shape in plan, and made of relatively rigid material; the stack having at least first and second modules, and means for providing confined flow of fluid between the modules, including inlet and outlet means; wherein the improvement comprises
for each module a plane passing through the centers of the prismoid bases in any row of prismoid bases being nonparallel to the sides of the module; and
the first module in the stack having a first orientation, and being disposed in a horizontal plane, and the second module having a second orientation which is said first orientation rotated 180° about a first horizontal axis, so that some, but not all, prismoid projecting bases of each module abut those of the other module.

4,374,543
APPARATUS FOR WELL TREATING

Charles N. Richardson, New London, Tex., assignor to Tri-State Oil Tool Industries, Inc., Bossier City, La.
Division of Ser. No. 179,487, Aug. 19, 1980, Pat. No. 4,314,608, which is a continuation-in-part of Ser. No. 158,889, Jun. 12, 1980, abandoned. This application Sep. 17, 1981, Ser. No. 303,190
Int. Cl.³ E21B *33/12*
U.S. Cl. 166—192 **3 Claims**

1. A pressure shearable plug for use in well treating operations comprising:
a cylindrical body having a bore extending vertically therethrough;
threads formed at the upper end of said cylindrical body for

attaching said body to a packer, whereby said pressure shearable plug and said packer may be used to selectively seal off a well bore;

threads at the lower end of said cylindrical body for threadably engaging a closure member; and,

a closure member for closing the lower end of said bore, said closure member having threads thereon adapted to engage the threads at the lower end of said cylindrical body,

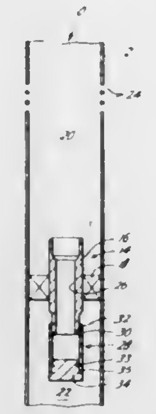

said cylindrical body and said closure member being formed of different materials having different shear strengths, whereby the threads on one of said cylindrical body and said closure member will be weaker than the intermeshing threads on the other of said body and said closure member and will preferrentially shear away when said closure member is subjected to a sufficient differential pressure.

4,374,544
TECHNIQUE FOR CONTROL OF INJECTION WELLS
Granval W. Westerman, Midland, Tex., and Corbett I. Otwell, Hobbs, N. Mex., assignors to Standard Oil Company (Indiana), Chicago, Ill.
Filed Sep. 19, 1980, Ser. No. 188,631
Int. Cl.[3] E21B *43/16*
U.S. Cl. 166—252 **5 Claims**

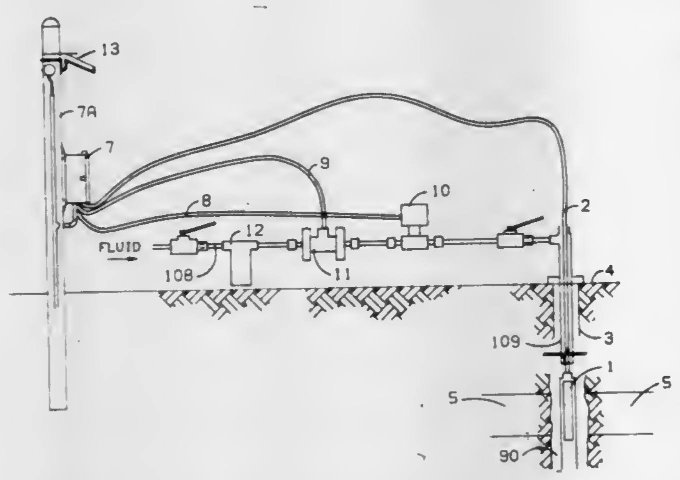

1. A method of controlling the injection of a fluid through a wellbore into an underground formation which comprises:
(a) injecting said fluid through said wellbore into said formation;
(b) detecting the pressure of said fluid in said wellbore in the vicinity of said formation; and
(c) using the pressure detected in step (b) to control the rate of injection of said fluid such that the pressure in the wellbore in the vicinity of said formation is maintained within a predetermined range.

4,374,545
CARBON DIOXIDE FRACTURING PROCESS AND APPARATUS
Ronald S. Bullen, and Allan T. Lillies, both of Calgary, Canada, assignors to L.H.B. Investment, Inc., Oklahoma City, Okla.
Filed Jan. 7, 1982, Ser. No. 337,743
Claims priority, application Canada, Sep. 28, 1981, 386809
Int. Cl.[3] E21B *43/267*
U.S. Cl. 166—280 **23 Claims**

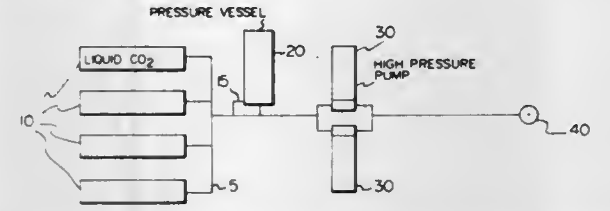

1. A method of fracturing an underground stratigraphic formation penetrated by a well bore comprising the steps of:
pumping a stream of liquified gas into said formation to cause the fracturing thereof;
introducing proppants into said stream of liquified gas for injection of said proppants into said fractures; and
pressurizing and cooling said proppants to substantially the storage pressure and temperature of said liquified gas prior to introducing said proppants into said stream of liquified gas.

19. Apparatus for hydraulically fracturing an underground stratigraphic formation penetrated by a well bore comprising:
a high pressure pump for injecting a fracturing fluid down said well bore, said fluid comprising a liquified gas;
first storage means to store said liquified gas under pressure;
conduit means to provide fluid communication between said pump and said first storage means;
second storage means to store proppants at a temperature and pressure substantially equal to the storage pressure and temperature of said liquified gas; and
supply means to introduce the proppants from said second storage means into the liquified gas flowing through said conduit means.

4,374,546
CONDITIONING APPARATUS FOR DIRT RACE TRACKS
Charles E. Mitchell, West Delaware, Ohio, assignor to Larcom & Mitchell Company, Inc., Delaware, Ohio
Filed Jul. 2, 1980, Ser. No. 165,377
Int. Cl.[3] A01B *5/00*
U.S. Cl. 172—148 **12 Claims**

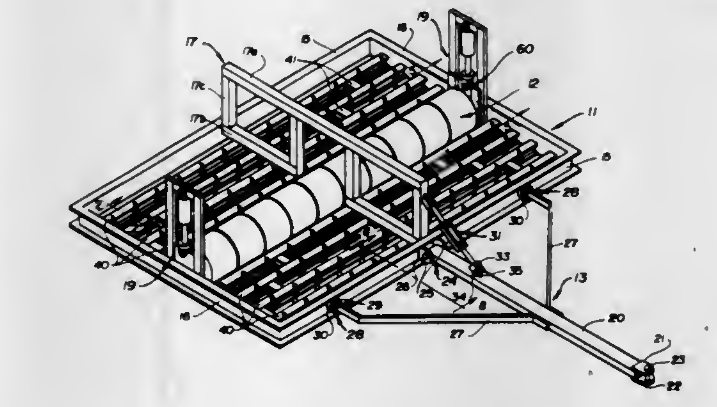

1. A conditioning apparatus for dirt race tracks comprising
a structural frame having a longitudinal axis disposed parallel to the path of movement of the apparatus and including a plurality of elongated tine supporting beams disposed in relatively spaced, transversely extending relationship to the direction of travel of the apparatus in traversing a track,
an elongated towing bar extending in forwardly projecting relationship to said frame for coupling of the apparatus to a towing vehicle, said towing bar having one end thereof pivotably connected to said frame for swinging movement in a vertical plane about an axis transverse to the frame's longitudinal axis and the other end adapted to mechanically interconnect with a towing vehicle,

wheeled support means mounted on said frame for support thereof in traversing movement over a track in predetermined spaced relationship above a surface of the track, said wheeled support means including an elongated roller disposed in transversely extending relationship to the longitudinal axis of said frame, said wheeled support means being pivotably mounted on said frame to permit relative pivoting of said frame about an axis parallel to said elongated roller,
a roller mounting structure mechanically coupled between said wheeled support means and said frame and being selectively operable to adjust the vertical position of said frame relative to said wheeled support means,
a plurality of upstanding, earth working tines mounted on said frame in a predetermined relative arrangement, each of said beams having a plurality of said earth working tines mounted thereon in relatively spaced relationship, said beams being subdivided into two groups each having a plurality of said beams, said first group being positioned forward of said roller and said second group being positioned rearward of said roller, said earth working tines disposed in laterally offset relationship to each other tine on each other beam with respect to said longitudinal axis and having a tine on each successive beam in a group offset a same predetermined distance with respect to a tine on the next preceding beam, the tines on each group of beams all being offset in a same direction, but in relatively opposite directions as between said first and second groups of beams, each of said tines having a bottom end disposed relative to said frame to project a distance below said frame to penetrate into an upper surface layer of the track to a predetermined depth whereby the penetrating tine portions will be pulled through the track's surface layer during traversing movement of the apparatus and thereby form a loose earth cushion surface on the track, and
leveling means mechanically coupled between said frame and said towing bar for securing the towing bar in predetermined relationship to said frame to maintain said frame at a selected position relative to a horizontal plane when said towing bar is secured to a towing vehicle, said leveling means selectively operable to enable adjustment of the towing bar to a relative angular position with respect to said frame to position said frame at a desired selected position relative to a horizontal plane for any selected vertical spacing of said frame relative to a track surface.

4,374,547
CRANK CONNECTOR FOR DIRECTIONAL DRILLING
Jean-Paul Nguyen, Rueil Malmaison; Emmanuel Laval, Paris, and Andre Cendre, Cosne sur Loire, all of France, assignors to Institut Francais du Petrole, Rueil-Malmaison, France
Continuation-in-part of Ser. No. 60,110, Jul. 24, 1979, Pat. No. 4,286,676. This application May 5, 1981, Ser. No. 260,613
Claims priority, application France, Jul. 24, 1978, 78 22063; Apr. 6, 1979, 79 08803; Apr. 6, 1979, 79 08804; Oct. 13, 1980, 80 21890
Int. Cl.[3] E21B *7/08*
U.S. Cl. 175—45 **4 Claims**

1. In a crank connector adapted for having its angle varied by remote control, the crank connector comprising first and second tubular members interconnected by a shaft, the shaft having an axis of rotation different from the axes of rotation of said first and second tubular members and fixedly rotatably secured to one of the first and second tubular members and movable between a locked rotatably secured position and a non-locked rotatably disengaged position with respect to the other tubular member, the shaft being movable into the non-lock position for causing said other tubular member to rotate about the axis of rotation of the shaft whereby the axes of rotation of the tubular members and the axis of rotation of the shaft define acute angles, and an auxiliary locking means for preventing relative rotation of the tubular members when disengaged and moved into the desired relative angular position prior to the tubular members being rotatably re-engaged, the improvement wherein the auxiliary locking means comprises at least one retractable locking finger positioned in a housing in one of the shaft and second tubular member, and axially extending grooves in the other of the shaft and second tubular member, said at least one locking finger and grooves located so as to have said at least one locking finger extend

from its housing to engage a corresponding one of said grooves after said shaft causes a desired rotation of said second tubular member when rotatably disengaged from said second tubular member, thereby preventing a further rotation of the second tubular member until the shaft and second tubular member return to a rotatably secured position, said at least one finger adapted for being forced back into its housing when said shaft and second tubular member are moved into a rotably secured position.

4,374,548
PLAYING VEHICLE WITH A PRIME MOVER
Eishin Ueno, Fuchu, and Sho Kikuchi, Musashino, both of Japan, assignors to Takagi Manufacturing Co., Ltd., Toyama, Japan
Filed Oct. 22, 1980, Ser. No. 199,542
Claims priority, application Japan, Oct. 25, 1979, 54-137971; Dec. 15, 1979, 54-163171
Int. Cl.[3] B62D *9/02*
U.S. Cl. 180—79 **9 Claims**

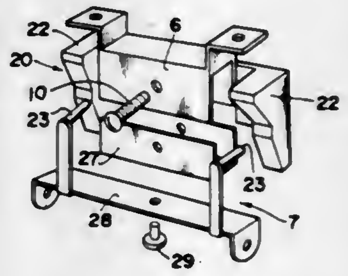

1. A motorized sporting vehicle for transporting a person, said vehicle comprising:
a vehicle body extending in a longitudinal direction and constructed to support thereon a person;
front and rear axles, each said axle having on opposite ends thereof wheels;
front and rear axle support means for supporting said front and rear axles, respectively, on longitudinally spaced front and rear portions, respectively, of said body, such that right and left sides of said body, with respect to said longitudinal direction, are capable of up and down oscillation with respect to said axles upon lateral shifting of the weight of the person to the right and left of said body, respectively, and

such that opposite ends of said axles are capable of oscillation in opposite directions longitudinally of said body;

prime mover means mounted for rotating one of said axles, and thereby for driving said vehicles;

motion conversion means associated with each said axle for, upon vertical movement of one side of said body with respect to said axle, imparting to opposite ends of said axle movement in opposite directions longitudinally of said body, whereby shifting of the weight of the person to one side of said body achieves longitudinal converging movement of those ends of said axles adjacent said side of said body, thus resulting in turning of said vehicle in the direction of said side; and

each said motion conversion means including stabilizing means for preventing movement of said ends of the respective said axle longitudinally of said body in the absence of lateral vertical movement of said body with respect to said axle.

4,374,549

DRIVE UNIT FOR A TWO-WHEELED MOTOR-DRIVEN VEHICLE AND VEHICLE INCLUDING SAID UNIT

Bernard Lacroix, Montbeliard, France, assignor to Cycles Peugeot, Valentigney, France

Filed Jul. 29, 1981, Ser. No. 287,848

Claims priority, application France, Aug. 4, 1980, 80 17160

Int. Cl.[3] B62M *7/04;* **B62K** *25/04*

U.S. Cl. 180—207 **8 Claims**

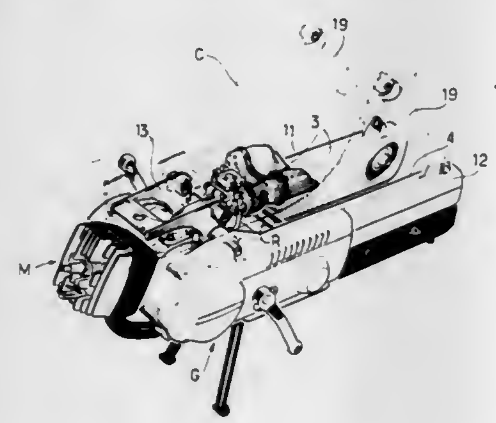

1. A drive out for a two-wheeled motor-driven vehicle comprising an assembly comprising a motor and a gearing down relay, suspension arms connected to the motor and adapted to receive, in the vicinity of free ends of the arms, a driving wheel of the vehicle, support means for a suspended part of the vehicle, the motor having a crankshaft, the relay having an output shaft and an input shaft, the input shaft being drivingly connected to the crankshaft of the motor and being spaced further away from the crankshaft than the output shaft of the relay, a pedal crank gear having a shaft which is located in said assembly between the motor and the relay and a unidirectional coupling drivingly coupling the crank gear shaft to the output shaft.

4,374,550

UPRIGHT FOR LIFT TRUCK

Richard J. Bartow, Athens, Mich., assignor to Clark Equipment Company, Buchanan, Mich.

Continuation of Ser. No. 17,779, Mar. 8, 1979, abandoned, Continuation-in-part of Ser. No. 842,765, Oct. 17, 1977, abandoned. This application Oct. 30, 1980, Ser. No. 202,099

Int. Cl.[3] B66B *9/20*

U.S. Cl. 187—9 E **42 Claims**

1. In a upright structure for lift trucks and the like having one upright section including transversely spaced vertical rails, a telescopic upright section including transversely spaced vertical rails mounted for elevation relative to said one section and elevatable load carrier means mounted for elevation relative to said telescopic section, the improvement comprising a sole asymmetric lift cylinder assembly mounted in the upright structure which is operatively connected to said telescopic upright section, elongated flexible lifting means operatively connected to said cylinder assembly, to said one upright section and to said load carrier means and having one end means thereof secured a substantial distance outwardly of one side only of the cylinder assembly in a direction which includes a lateral component and having the other end means thereof secured to said load carrier means, said cylinder assembly together with said flexible lifting means being adapted to elevate said load carrier means relative to the telescopic upright section and the latter section relative to the one upright section, the lift cylinder being located a substantial distance toward one lateral side of the upright structure such that it projects at least partially into the area of interference by an adjacent vertical rail with the visibility of the operator from his normal line of sight through said adjacent vertical rail, said normal line of sight being defined when the operator is located in a predetermined designed position and attitude for normal operation of the lift truck, the operative connection of said cylinder assembly to said telescopic section in relation to said one and other end means being such that at least approximately balanced lifting force moments act upon the upright structure in the transverse plane of the upright at least when a load is carried substantially centrally thereof.

37. In an upright structure for lift trucks and the like having a fixed upright section including transversely spaced vertical

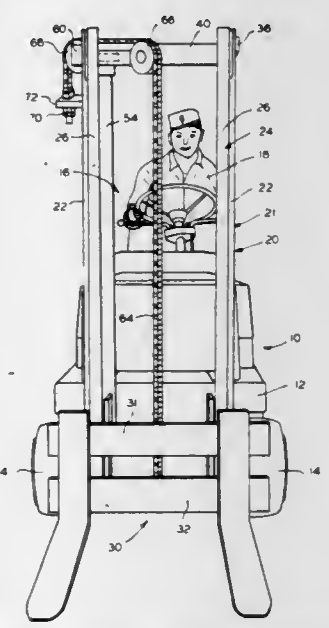

rails, a first telescopic upright section including transversely spaced vertical rails mounted for elevation relative to said fixed section, a second telescopic upright section including transversely spaced vertical rails mounted for elevation relative to said first telescopic section and elevatable load carrier means mounted for elevation relative to said second telescopic section, the improvement comprising first and second wheel elements mounted operatively from said first telescopic section in substantial longitudinal rotating alignment and spaced relation one to the other, sole flexible lifting means reeved on said first and second wheel elements, said first and second wheel elements being operatively mounted from said first telescopic section in such a manner that one end means of said flexible lifting means is secured substantially centrally of said second telescopic section and the other end means is secured in vertically fixed relation to the fixed upright section, and a lift cylinder assembly mounted in the upright structure asymmetric thereof and operatively connected to said first telescopic section intermediate the axes of rotation of said first and second wheel elements for actuating the wheel elements and said flexible lifting means to elevate said second telescopic section relative to the first telescopic section and the latter section relative to the fixed section, the lift cylinder assembly being located a substantial distance toward one lateral side of the upright structure such that it projects at least partially into the

area of interference by an adjacent vertical rail with the visibility of the operator from his normal line of sight through said adjacent vertical rail, said normal line of sight being defined when the operator is located in a predetermined designed position and attitude for normal operation of the lift truck.

4,374,551

MECHANICAL ACTUATING DEVICE FOR A SPOT-TYPE DISC BRAKE

Alfred Birkenbach, Hattersheim, and Helmut Franke, Wehrheim, both of Fed. Rep. of Germany, assignors to ITT Industries, Inc., New York, N.Y.

Filed Oct. 29, 1980, Ser. No. 201,941

Claims priority, application Fed. Rep. of Germany, Nov. 20, 1979, 2946854

Int. Cl.[3] F16D *65/16, 65/52*

U.S. Cl. 188—71.9 **17 Claims**

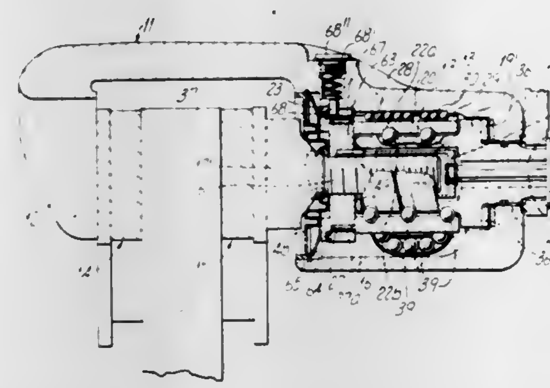

1. A mechanical actuating device for a spot-type disc brake comprising:

a brake caliper embracing a brake disc having a cylindrical bore disposed in one leg thereof, said bore having a longitudinal axis parallel to an axis of rotation of said brake disc;

an actuating spindle disposed in said bore coaxial of said longitudinal axis;

an actuating nut disposed in said bore coaxial of said longitudinal axis cooperating with said actuating spindle in a manner to advance a brake shoe actuating member when an axial relative displacement between said actuating spindle and said actuating nut occurs due to a relative rotation between said actuating spindle and said actuating nut caused by an actuating means connected to one of said actuating spindle and said actuating nut; and

an automatic brake pad clearance adjusting device disposed in said bore coaxial of said longitudinal axis including

an adjusting spindle disposed coaxial of said longitudinal axis connected to and extending away from a surface of said brake shoe actuating member remote from said brake disc, said adjusting spindle and said brake shoe actuating member being locked to each other to prevent rotational movement thereof,

an adjusting nut disposed coaxial of said longitudinal axis threaded on said adjusting spindle and accessible from the outside of said one leg remote from said brake disc for turning thereof during brake pad replacement, and

a clutch device disposed coaxial of said longitudinal axis associated with said adjusting nut to cause said adjusting spindle to execute a rotary motion advancing said adjusting spindle toward said brake disc, said clutch device becoming effective during a brake application when a nominal brake pad clearance is exceeded;

said actuating nut and said actuating spindle transmitting their relative axial displacement to said adjusting nut;

said adjusting nut and said adjusting spindle are subjected to the force of a spring in a brake release direction; and

said spring is a cup spring acting between said leg and said adjusting nut.

4,374,552

PIVOTED LEVER CALIPER BRAKE

Leonid Dayen, Plymouth, Minn., assignor to Horton Manufacturing Co., Inc., Minneapolis, Minn.

Continuation of Ser. No. 53,413, Jun. 29, 1979, abandoned. This application Apr. 9, 1981, Ser. No. 252,288

Int. Cl.[3] F16D *55/10*

U.S. Cl. 188—72.9 **2 Claims**

1. A caliper brake comprising:

(a) a base,

(b) a single pole mounted on said base and normal thereto,

(c) first and second identical brake arms having first and second ends,

(d) each of said arms having a pole boss extending therefrom intermediate the first and second ends and adjacent an edge of the arm and spaced from the opposite edge thereof and

(e) a hole extending therethrough, said pole extended through the holes of said pole bosses with the pole boss of one arm positioned upon the pole boss of the other arm with the holes of said pole bosses in alignment thereby mounting said arms in pivotal juxtaposition,

(f) first and second brake shoes each having a friction facing thereon,

(g) each of said arms having a shoe boss on the first end thereof, and a hole extending therethrough parallelly disposed to the hole in the pole boss,

(h) each of said brake shoes having a pair of spaced flanges and

(i) each flange having a hole extending therethrough,

(j) first and second pins extending through each of the holes of said flanges of said first and second brake shoes and extending through the shoe boss of the first ends of said first and second arms thereby pivotally mounting said brake shoes on said arms,

(k) said base having a stop pin extending upwardly therefrom and parallelly disposed to said single pole,

(l) first and second guide pins mounted on said first and second arms intermediate the pole boss and the second end of said arms and extending normal thereto and contactable with said stop pin,

(m) means for adjustably positioning each of said guide pins relative to the brake arm for adjusting the pivotal position of said brake arms each to the other, and

(n) means interposed between the second ends of said brake arms for pivoting said arms upon said pole and the friction facings thereof together to grip a disc positioned between said friction facings of said shoes and away from each other for release of the disc.

4,374,553
CALIPER TYPE DISC BRAKE
Raymond E. Peck, Dearborn Heights; Randall P. Petresh, Northville, and Gary N. Benninger, Dearborn, all of Mich., assignors to Ford Motor Company, Dearborn, Mich.
Continuation-in-part of Ser. No. 959,554, Nov. 13, 1978, abandoned. This application Mar. 13, 1980, Ser. No. 129,866
Int. Cl.³ F16D *55/224*
U.S. Cl. 188—73.45 **5 Claims**

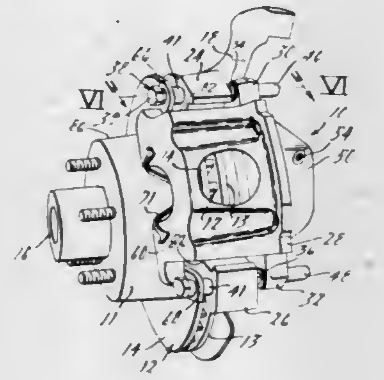

1. A disc brake comprising:
a rotatable rotor having friction faces on the first and second side thereof;
a stationary torque member being disposed at one of the first and second sides of the rotor;
said torque member having an ear radially extending outward of said rotor;
a caliper straddling said rotor;
a first and second brake shoe adjacent the first and second sides of said rotor;
a one-piece guide element slidably mounting a mounted portion of said caliper to said ear of said torque member with said torque member being interposed between said mounted portion of said caliper and said rotor such that said caliper is movable in a transverse direction to said rotor faces along said guide element;
said guide element spanning said rotor and passing through an internally threaded aperture in said ear of said torque member and threadably engaged therewith;
said guide element comprising a pin with spaced apart first and second non-threaded portions with a threaded section therebetween engaging said ears of said torque member;
the first non-threaded portion extending through an aperture in said mounted portion of the caliper and the second non-threaded portion extending through an aperture in the first brake shoe, with said portion of the caliper and the first brake shoe being disposed on opposing sides of said ear of said torque member;
the second non-threaded portion being structurally stronger than said first non-threaded portion and having a larger radius than said first non-threaded portion and threaded portion of said pin and said apertures in said torque member and said caliper;
said aperture in said first brake shoe being larger than the apertures in said torque member or caliper to slidably receive said second non-threaded section;
said first brake shoe being mounted to said second non-threaded portion of said guide element on an opposite side of said rotor from said mounted portion of said caliper such that torque applied to said brake shoe from said rotor is transferred through said second non-threaded portion of said guide element to said stationary torque member;
actuating means for moving said brake shoes into engagement with said friction faces of said rotor;
retaining means for retaining said second brake shoe on the same side of said rotor as said mounted portion of said caliper in an operable position between said actuating means and said rotor and in torque transfer relationship directly with said torque member;
the caliper and first brake shoe being slidably mounted on the first and second non-threaded portions respectively of said pin for movement transverse to said rotor.

4,374,554
DUO-SERVO DRUM BRAKE
James J. Colpaert, Granger, Ind., assignor to The Bendix Corporation, Southfield, Mich.
Filed Oct. 3, 1980, Ser. No. 193,851
Int. Cl.³ F16D *51/24, 65/24*
U.S. Cl. 188—106 A **1 Claim**

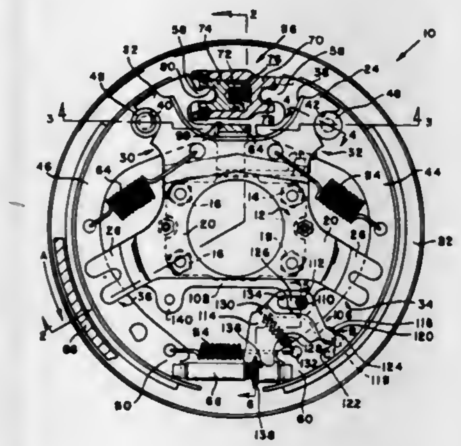

1. In a drum brake of the type including a pair of arcuate brake shoes carried on a backing plate, said brake shoes being movable into engagement with a rotatable brake drum to effect a brake application to retard rotation of said brake drum, said backing plate including a pair of radially extending plates, each of said plates having a plurality of circumferentially spaced arms extending radially therefrom, said plates being secured to one another so that the arms of one plate are axially spaced from and circumferentially coincident with the arms of the other plate so as to define circumferentially spaced pairs of radially-extending arms, said brake shoes being slidably received between said arms, characterized in that two circumferentially adjacent pairs of said arms define a circumferentially-extending recess therebetween, said circumferentially-extending recess receiving a hydraulic actuator engaging said brake shoes to effect a brake application, said hydraulic actuator cooperates with said brake shoes to always remain spaced from said plates, said hydraulic actuator pivotally carries a parking lever engageable with one of said brake shoes and pivotally engaged to said hydraulic actuator at a location spaced axially outwardly from the engagement with said one brake shoe, said one brake shoe defining a confronting end engaging said hydraulic actuator and a portion radially spaced and circumferentially in alignment with said confronting end, said parking lever forms an abutment engageable with said portion to move said one brake shoe during a parking brake application, and said abutment and said portion are disposed within said circumferentially-extending recess.

4,374,555
CARRYING CASE WITH GUARDS
Joseph E. March, Chicago, Ill., assignor to Platt Luggage, Inc., Chicago, Ill.
Filed Jan. 26, 1981, Ser. No. 228,672
Int. Cl.³ A45C *13/04, 13/36*
U.S. Cl. 190—48 **1 Claim**

1. A carrying case adaptable for carrying relatively heavy objects comprising:
a unitary member of U-shaped cross section constituted by side walls and a bottom wall including a reinforcing plate;
molded end shells of relatively rigid material, each having a flat panel in the shape of a rectangle with arcuate corners, each end shell having a peripheral flange extending along the periphery of the flat panel, the flange including a lesser periphery extending outwardly and substantially perpendicular to the flat panel, a curved portion where the flange reverses back upon itself, and a greater periphery spaced apart from and substantially parallel to the lesser periphery, the lesser periphery and the curved portion and the greater periphery successively constituting the flange and defining an inwardly facing channel for receiving an edge of said unitary member;
overlying and underlying lid flaps each hinged below the tops of said end shells and conforming to the upper portions and respective arcuate corners of the peripheral flanges of said end shells when the case is in a closed position, said overlying flap having an aperture so as to receive therethrough a handle secured to said underlying flap so that the carrying case may conveniently be carried when in a closed position;

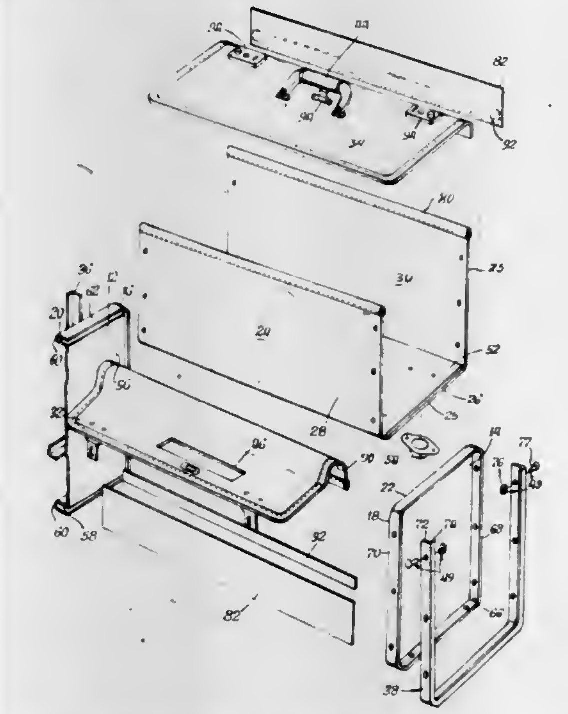

U-shaped metal guards, each guard having a longer arm and a shorter arm so that the guard has an L-shaped cross section, said longer arm extending generally parallel to and adjacent the respective greater periphery, said shorter arm extending adjacent the respective curved portion but unattached thereto; and
rivet assemblies arranged in a single respective series along each of said guards, each of said rivet assemblies extending through sequentially the longer arm of the respective guard, the greater periphery of the respective flange, an edge of the unitary member, and the lesser periphery of the respective flange.

4,374,556
CLUTCH RELEASE DEVICE
Armin Olschewski, Schweinfurt; Manfred Brandenstein, Eussenheim; Lothar Walter, Schweinfurt, and Horst M. Ernst, Eltingshausen, all of Fed. Rep. of Germany, assignors to SKF Kugellagerfabriken GmbH, Schweinfurt, Fed. Rep. of Germany
Filed Nov. 5, 1980, Ser. No. 204,185
Claims priority, application Fed. Rep. of Germany, Nov. 8, 1979, 7931492
Int. Cl.³ F16D *23/14*
U.S. Cl. 192—98 **11 Claims**

1. In a clutch release bearing assembly, in which a clutch thrust bearing is mounted to be radially displaceable with respect to sliding sleeve means and has a fixed bearing ring and a rotatable bearing ring, housing means coupled to the sliding sleeve has a radially directed flange that engages said fixed bearing ring of said clutch thrust bearing, said fixed bearing ring having a bore, and a ring of elastic material is positioned in the bore or on the surface of the fixed bearing ring, the ring of elastic material constituting means for damping the relative movement of the clutch thrust bearing with respect to the sliding sleeve; the improvement wherein said housing means has a bore with axially directed open recesses facing said clutch thrust bearing, said damping ring having resilient tongues extending substantially axially from its inner circum-

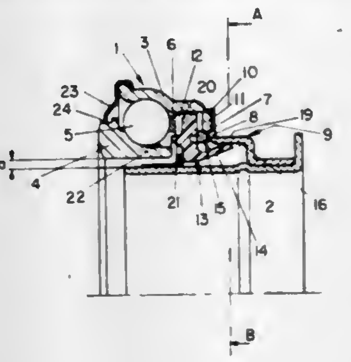

ference, said resilient tongues engaging said recesses of said housing means, the outer radial surface of each said recess having a circular shape, and being joined at its circumferential ends to a flat surface extending between adjacent recesses.

4,374,557
COIN CHANGER FOR A VENDING MACHINE
Osamu Sugimoto; Masaki Akagawa, and Yukichi Hayashi, all of Sakado, Japan, assignors to Kabushiki Kaisha Nippon Coinco, Tokyo, Japan
Filed Nov. 14, 1980, Ser. No. 206,690
Claims priority, application Japan, Nov. 22, 1979, 54/162251[U]
Int. Cl.³ G07F *3/02*
U.S. Cl. 194—100 A **4 Claims**

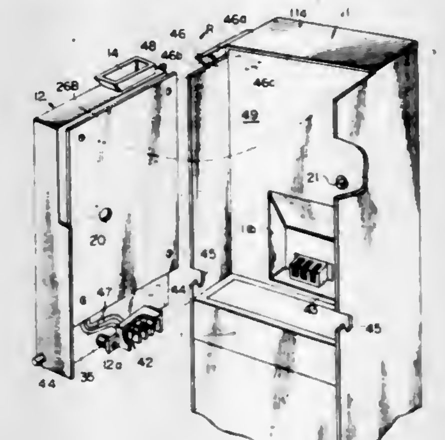

1. A coin changer for a vending machine comprising:
an electronic type coin discrimination device including a discrimination means for electronically discriminating a true coin from a counterfeit coin among deposited coins, a true coin passage and a counterfeit coin passage provided at a post stage of said discrimination means and sort out means for sorting out coins guided to said true coin passage by denomination; and
a coin changer main part including coin receiving means for receiving coins having been sorted out by said sort out means, control means for controlling operations such as counting the amount of deposited coins, vending of an article and returning of money and an electromagnetic device controlled by a discrimination signal representative of trueness or falsity of the deposited coin provided from said discrimination means and also by said control means to cause a reject member to project into or to be withdrawn from a predetermined point immediately before entrances to said true coin passage and said counterfeit coin passage for guiding the deposited coin to either one of said passages
characterized in that said coin changer main part further

comprises coin detection means for generating signals for counting the amount of the deposited coins for respective denominations in response to passing of the coins having been sorted out by said sort out means, said signals being supplied to said control means and that

the output of said discrimination means in said electronic type coin discrimination device is utilized not for controlling counting of the amount of the deposited coins but only for controlling said electromagnetic device, electric wirings connect said coin changer main part with said coin discrimination device, said electric wirings being provided with disengageable connector means, and said electronic type coin discrimination device is detachably mounted in said coin changer main part.

4,374,558
STEPS OF PASSENGER CONVEYOR
Cyuichi Saito, Katsuta, Japan, assignor to Hitachi, Ltd., Tokyo, Japan
Filed Sep. 29, 1980, Ser. No. 191,845
Claims priority, application Japan, Sep. 28, 1979, 54-123919
Int. Cl.³ B66B *9/12*
U.S. Cl. 198—333 **4 Claims**

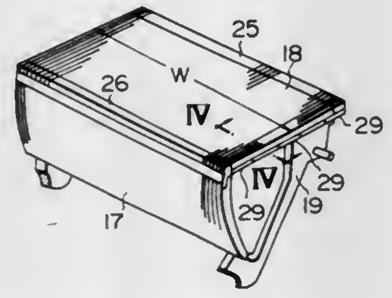

1. Steps of a passenger conveyor each comprising:

a tread formed with a multiplicity of cleats and grooves alternately disposed and extending in a direction of movement of the steps in alignment with teeth of comb plates mounted at embarkation and disembarkation areas of the passenger conveyor;

a riser connected to one end of said tread; and

a plurality of frames each attached to one of opposite ends of said tread;

wherein the improvement comprises: reinforcing members interposed between said plurality of frames, said reinforcing members being joined by spot welding to an undersurface of said tread, said tread is formed of a steel sheet bent in such a manner so as to provide plannar steel sheet side edge surface portions with said cleats and grooves being located in a central portion of the tread between the plannar side edge surface portions said spot welding being effected by utilizing said grooves; and

a plurality of side pieces disposed on said plannar side edge surface portions and extending in a direction of movement of the steps, said side pieces are transversely adjustably secured to said planar side edge surface portions by fastening means so as to enable a compensation of tolerance variations occuring during the bending of the steel sheet.

4,374,559
APPARATUS FOR HANDLING ARTICLES
David C. Morton, Harrogate, England, assignor to Baker Perkins Holdings Ltd., Peterborough, England
Filed Jan. 23, 1981, Ser. No. 227,926
Claims priority, application United Kingdom, Mar. 12, 1980, 8008405
Int. Cl.³ B65G *59/06*
U.S. Cl. 198—429 **5 Claims**

1. Apparatus for feeding batches of biscuits from a plurality of magazines spaced equally from one another alongside a continuously moving infeed conveyor leading to a wrapping machine and including a series of pusher bars spaced at a different pitch from the magazines and each serving to advance to the wrapping machine at least one batch of biscuits, said apparatus including a biscuit carrier movable from a receiving position in which it receives batches of biscuits from all of the magazines to a discharge position in which it holds the batches above the conveyor with the batches aligned transversely to the conveyor, means for charging the carrier simultaneously

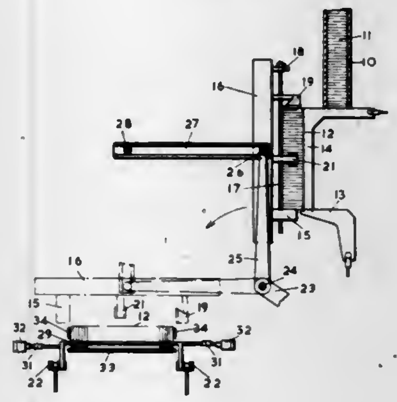

with batches from all the magazines, means for effecting sequential dropping of the batches from the carrier onto the infeed conveyor until all the batches have been dropped, and means for thereafter moving the carrier to the receiving position for recharging it with further batches and returning it to the discharge position to enable the further batches to be dropped for advance by the pusher bars following those which advanced the previous group of batches.

4,374,560
COLLAPSIBLE DISPLAY BIN STAND
Robert J. Howlett, Edison, N.J., assignor to Container Corporation of America, Chicago, Ill.
Filed Dec. 14, 1981, Ser. No. 330,165
Int. Cl.³ B65D *5/50, 5/52, 85/00;* **A45D** *19/04*
U.S. Cl. 206—44 R **6 Claims**

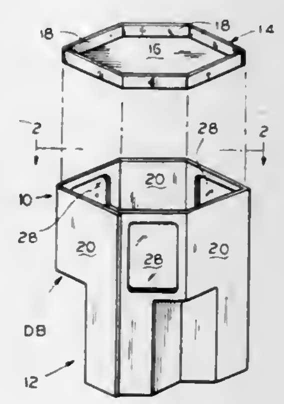

1. A collapsible, automatically erectable, display bin stand formed of foldable sheet-material such as paperboard, comprising:

(a) a hexagonal-shaped, upper, receptacle member, supported by a base member which includes a plurality of hexagonal-shaped tubes;

(b) said stand including six generally inverted, L-shaped, side panels extending substantially the entire height of said stand and being joined to each other on parallel fold lines to form a tubular structure;

(c) said side panels having integral upper and lower portions which form parts of the receptacle and base members, respectively;

(d) said base member including a plurality of panels joined to said side panel lower portions and to each other on parallel fold lines to form said hexagonal-shaped tubes;

(e) a floor panel in said receptacle member supported on said base member.

4,374,561
ARTICLE CARRIER
James T. Stout, Acworth, and Prentice J. Wood, Hapeville, both of Ga., assignors to The Mead Corporation, Dayton, Ohio
Filed Oct. 13, 1981, Ser. No. 310,894
Int. Cl.³ B65D *5/48*
U.S. Cl. 206—188 **7 Claims**

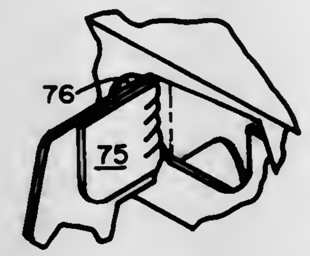

1. An article carrier comprising a bottom panel, opposed side walls foldably joined to opposite side edges of said bottom panel, end panels foldably joined to the ends of said side walls and extending transversely inward therefrom, riser panels foldably joined to said end panels respectively, the riser panels at each end of the carrier being secured together in face contacting relation, a multi-ply handle connected at its ends to said riser panels, a medial keel panel formed integrally with each riser panel at one end of the carrier and projecting inwardly therefrom, a transverse partition panel foldably joined to one of said keel panels and arranged with its outer edge anchored to one of said side walls, a reinforcing tab joined to the other of said keel panels and disposed in flat face contacting relation with said transverse partition panel, at least one cut formed along the junction behind said reinforcing tab and said other keel panel, and an aperture formed astride the fold line between said transverse partition panel and said one keel panel.

4,374,562
ARTICLE CARRIER
James R. Oliff, Austell, Ga., assignor to The Mead Corporation, Dayton, Ohio
Filed Feb. 23, 1981, Ser. No. 236,744
Int. Cl.³ B65D *65/12, 85/30*
U.S. Cl. 206—434 **5 Claims**

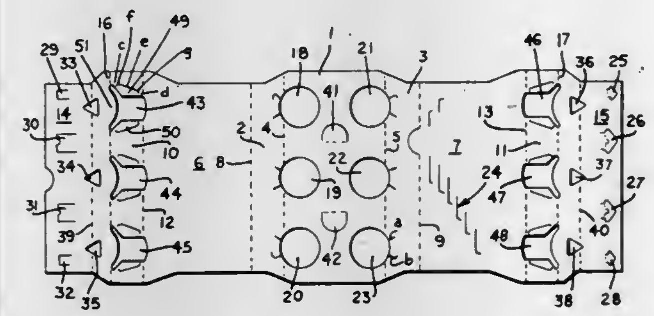

1. An article carrier comprising parallel top and bottom panels, parallel side panels, said side panels being interconnected respectively to the side edges of said bottom panel by a pair of sloping panels, a heel receiving aperture formed substantially in one of said sloping panels, a retention tab foldably joined to said one sloping panel, said retention tab being joined along the periphery of said heel receiving aperture by means of spaced connecting elements, said connecting elements being separated by an expansion slit, and both ends of said expansion slit being curved generally toward said heel receiving aperture.

4,374,563
NOVEL PACKAGE FOR WATER SANITIZING CHEMICAL AND METHOD FOR PREPARING IT
Roy P. Alexander, Killingworth, Conn., assignor to Olin Corporation, New Haven, Conn.
Filed Oct. 27, 1980, Ser. No. 200,801
Int. Cl.³ B65D *85/62, 65/00*
U.S. Cl. 206—499 **16 Claims**

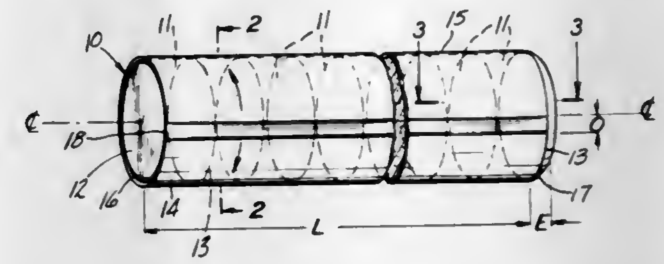

1. A novel package of available chlorine compound for placing in the strainer basket of a swimming pool skimmer unit comprised of:

a. a plurality of tablets of said available chlorine compound:

1. each of said tablets having two substantially parallel planes joined to a cylindrical exterior,
2. each of said tablets being stacked together with one of said planes of one tablet being adjacent to one of said planes of a next of said tablets and forming a stick of desired length, said stick having a longitudinal axis perpendicular to said planes, and

b. said stick being covered with a sheet of heat shrinkable, liquid impervious synthetic material secured at opposite ends around said cylindrical exterior, leaving the outermost plane of the tablet at each end of said stick uncovered.

4,374,564
TICKET DIVERTER MODULE
Gregory E. Miller, Escondido, and John E. Toth, San Diego, both of Calif., assignors to Cubic Western Data, San Diego, Calif.
Filed Dec. 1, 1980, Ser. No. 211,029
Int. Cl.³ B07C *5/00*
U.S. Cl. 209—583 **9 Claims**

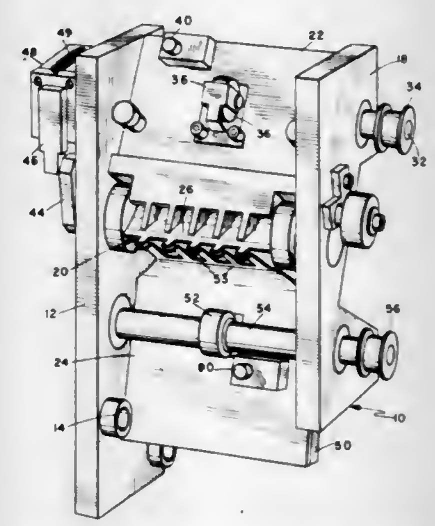

1. A diverter module unit for a ticket handling system, said unit comprising:

housing means defining a ticket inlet and a plurality of ticket outlets,

one of said outlets is an exit outlet for returning a ticket to a patron,

the other of said outlets is a capture passage for retaining a ticket,

diverter means for selectively diverting a ticket from said inlet to a selected one of said outlets,
said capture passage includes escrow means for selectively holding a ticket for inspection,
said escrow means includes a transport roller for engaging a ticket in said capture passage, and an escrow roller for selective movement into and out of engagement with said transport roller.

4,374,565
STAND FOR WRITING DEVICES
Ruediger Neumann, Kiel, Fed. Rep. of Germany, assignor to Koh-I-Noor Rapidograph, Inc., Bloomsbury, N.J.
Filed Sep. 16, 1980, Ser. No. 187,665
Claims priority, application Fed. Rep. of Germany, Sep. 27, 1979, 7927469[U]
Int. Cl.³ A47F *7/00*
U.S. Cl. 211—69.5 **5 Claims**

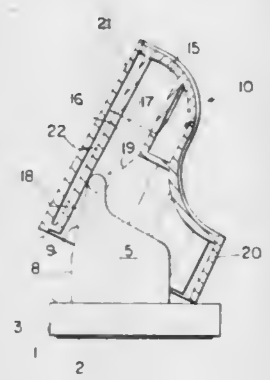

1. A stand for writing devices, such as tube writers and the like, comprising a lower part, that is adapted to be placed upon a, supporting surface and an upper part which is mounted for pivotable movement with respect to said lower part and which further comprises means to accept at least one writing device, wherein said upper part is in bearing contact with laterally extending bearing pins of said lower part which extend from each of at least two supports extending upwardly from the lower part, wherein the bearing pins (6 and 7) extend laterally proximate the upper end area of each of said support (4 and 5) wherein the upper part (10) further comprises guide slots (16) which are open to the bottom of said upper part and extend upwardly within said upper part and accept said bearing pins, whereby the bearing pins (6 and 7) and the upper part (10) are operable to frictionally engage in a pivoted position, so that a lower longitudinal edge of the upper part rests upon an upper surface of the lower part (1).

4,374,566
JIB CRANE WITH POLYCENTRICAL TRAJECTORY
Claudio Spera, Salita Superiore della Rondinella 18/7, Genoa, Italy
Filed Oct. 30, 1980, Ser. No. 202,292
Claims priority, application Italy, Nov. 12, 1979, 12814 A/79
Int. Cl.³ B66C *23/06*
U.S. Cl. 212—199 **4 Claims**

1. A tower crane comprising a vertical tower, a trolley movable vertically on said tower, a jib pivotally connected to said trolley and extending at an angle from said vertical tower, a pulley at an outer end of said jib, a hoist running over said pulley and down to a suspended load and means for varying the angle of said jib as a function of the vertical position of said trolley to decrease the angle between said jib and said tower

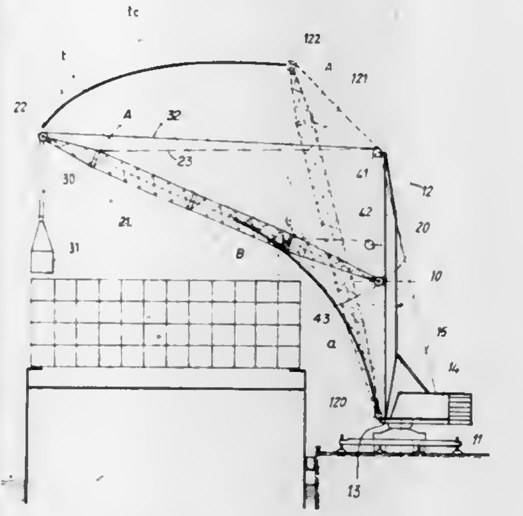

when said trolley descends and conversely to increase the angle between said jib and said tower as said trolley ascends.

4,374,567
POWDER ACTUATED PISTON TOOL WITH POWER ADJUSTMENT
Marc Combette, and Jean Ollivier, both of Valence, France, assignors to Olin Corporation, New Haven, Conn.
Filed Apr. 9, 1980, Ser. No. 138,789
Claims priority, application United Kingdom, Apr. 10, 1979, 7912653
Int. Cl.³ B25C *1/14, 1/18*
U.S. Cl. 227—10 **4 Claims**

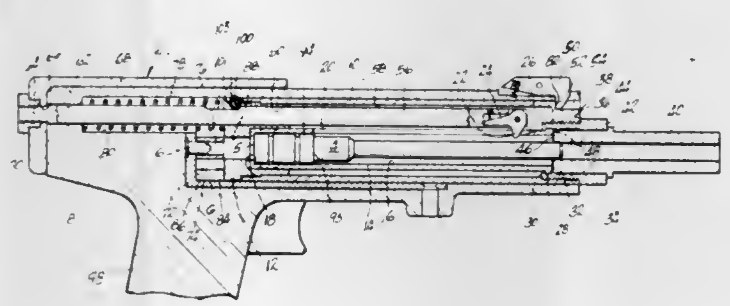

1. A power adjustment mechanism for use in a powder actuated fastener driving tool comprising:
(a) a housing;
(b) means forming a barrel connected to said housing, said barrel having a breech end and a muzzle end;
(c) means forming a firing chamber at the breech end of said barrel;
(d) a fastener driving piston reciprocally slidably disposed in said barrel;
(e) stop means nonrotatably reciprocally movably disposed in said barrel, muzzlewardly of said firing chamber, said stop means being operable to engage a breechward surface on said piston to stop return movement of said piston from a fired position to a firing position thereby establishing said firing position of said piston within said barrel; and
(f) adjustment means operably connected to said stop means for moving said stop means axially of said barrel to selectively vary the spacing between said stop means and said firing chamber whereby a variable volume gas expansion chamber is provided in said barrel between said firing chamber and a breechward end of said piston to variably control power output of said tool.

4,374,568
COMPOSITE CONTAINER WITH COMPRESSED BODY WALL PORTION
John D. Horton, Hartsville, S.C., assignor to Sonoco Products Company, Hartsville, S.C.
Division of Ser. No. 234,191, Feb. 13, 1981. This application Oct. 29, 1981, Ser. No. 316,444
Int. Cl.³ B65D *3/10*
U.S. Cl. 229—5.5 **5 Claims**

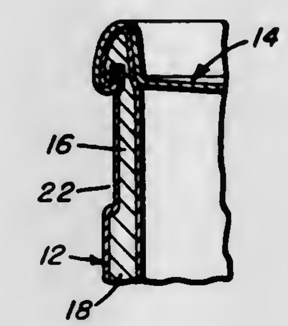

1. In a composite container constructed particularly for the accommodation of the cutting blade and drive wheel of a conventional can opener, a composite wall defining a tubular body with opposed ends, said wall, along a circumferential section of the tubular body adjacent at least one of said ends, being inwardly compressed and densified, defining a wall portion both thinner than and of a greater density than the remainder of said wall, said circumferential section having an internal diameter equal to the internal diameter of the remainder of said tubular body, a metal end cap overlying said one of said ends, said end cap including a peripheral flange seamed to said wall portion to define a peripheral sealing bead, said circumferential section and said wall portion defined thereby extending a substantial distance along said tubular body beyond said bead to define an external recess peripherally about said body.

4,374,569
FURNACE DRAFT CONTROL SYSTEM WITH ELECTRONIC LOSS-OF-DRAFT TIMER
Thomas E. Hayes, Goshen, Ind., assignor to Johnson Controls, Inc., Milwaukee, Wis.
Filed Jul. 29, 1981, Ser. No. 288,109
Int. Cl.³ F23N *3/00*
U.S. Cl. 236—1 G **8 Claims**

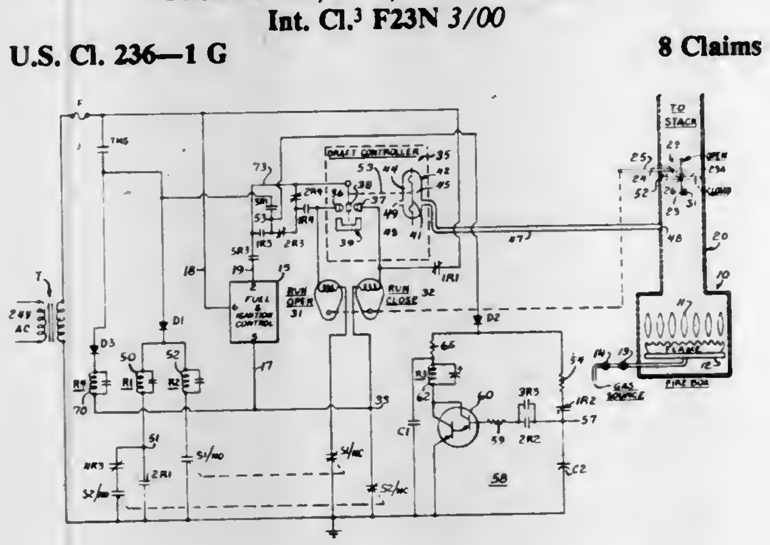

1. In combination with a furnace having a firebox and adapted to be connected to a source of fuel by means of fuel control means, a movable element movable between a closed and an open position for controlling the flow of air through a firebox of said furnace, and a thermostat for generating a call-for-heat signal from a space to be heated by said furnace, the improvement comprising: flue means for communicating combustion gases from said firebox to a chimney and substantially free of losses to the atmosphere between said firebox and chimney; motor means responsive to a run open signal for operating said movable element toward said open position and responsive to a run closed signal for operating said element toward said close position; first limit switch means actuated when said movable element is in said open position; second limit switch means actuated when said movable element is in said closed position; holding circuit means responsive to a call-for-heat signal only when said second limit switch means is actuated for generating an initial run open signal to said motor means; controller means including pressure sensing means responsive to the pressure in said flue means for generating a run open signal when the draft in said flue means is less than a first predetermined value, and for generating a run close signal when the draft in said flue means is greater than a second predetermined value, said controller means generating neither of said signals when the draft is between said first and second predetermined values; electronic timer circuit means responsive to the actuation of said first limit switch means when said movable element is in said open position following a predetermined time interval after said holding means is actuated for generating a timing signal of predetermined duration representative of a trial-for-draft period; first enable circuit means energized by said timer circuit means during said trial-for-draft period for energizing said fuel control means and for enabling said controller means to couple said run open and run close signals to said motor means; said timer circuit means being connected in circuit with said first limit switch to de-energize said first enable circuit means if said controller means senses no draft in said flue means during said trial-for-ignition period.

4,374,570
STERILIZED STORAGE CONTAINER
Roger S. Sanderson, Dana Point, and Robert C. Whelchel, Newport Beach, both of Calif.
Continuation-in-part of Ser. No. 895,239, Apr. 10, 1978, Pat. No. 4,247,517, which is a continuation-in-part of Ser. No. 821,042, Aug. 1, 1977, Pat. No. 4,251,482, which is a continuation-in-part of Ser. No. 734,228, Oct. 20, 1976, abandoned, which is a continuation-in-part of Ser. No. 703,044, Jul. 6, 1976, Pat. No. 4,196,166, which is a continuation-in-part of Ser. No. 640,824, Dec. 15, 1975, abandoned. This application Jul. 25, 1980, Ser. No. 172,421
Int. Cl.³ G05D *27/00*
U.S. Cl. 236—92 R **7 Claims**

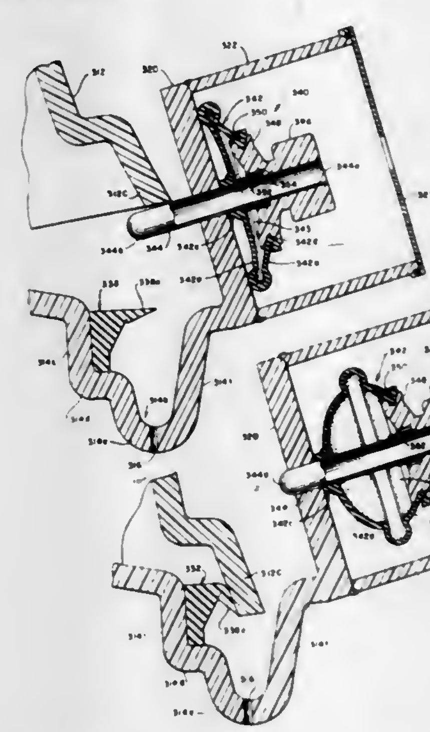

1. An actuator comprising:
flexible means defining an expandable chamber having opposing end walls, one of said end walls having a hole formed therein;
an actuator pin secured to the other of said end walls and extending through said chamber and through said hole in a manner which permits the pin to slide within said hole as

the chamber expands or contracts while preventing fluid leakage through said hole, said actuator pin having a valve passage extending through one end of the pin and opening to the interior of the chamber to permit environment to enter the chamber; and

including valve means responsive to the temperature of the environment applied to said chamber for automatically closing the valve passage to capture a quantity of said environment in said chamber so that subsequent changes in the environment on the exterior of the chamber will cause the chamber to expand or contract accordingly and cause said actuator pin to slide within said hole when the surrounding end wall is restrained.

4,374,571
SCENT DISPENSER
George T. Hirvela, 6816 Tower Ave., Superior, Wis. 54880
Filed Feb. 20, 1981, Ser. No. 236,311
Int. Cl.³ A24F *25/00;* **A61L** *9/04*
U.S. Cl. 239—36 **5 Claims**

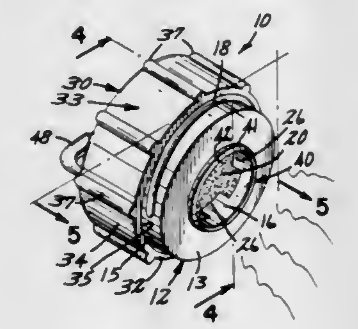

1. An animal scent holding and releasing device for outdoor use, comprising:

(a) a container having a continuous side wall, a first end having an opening therein, and a closed second end opposite said first end, said container having a generally circular cross-section;

(b) means removably disposed within said container for holding a scent;

(c) means associated with said container for releasably retaining said scent holding means within said container, said retaining means including a plurality of retaining members projecting from said container first end adjacent said opening in a direction towards said second end, each of said retaining members having a free end terminating at a location intermediate said container first and second ends, said scent holding means being a sponge-like body of absorbent material capable of holding a scent, said body being disposed between and engaged by said retaining member ends and said container second end, said body of material being flexible whereby said body may be inserted into and removed from said container through said first end opening;

(d) a cover constructed and designed to enclose either of said container ends;

(e) means for securing said cover to either said first end for sealing said container to prevent loss of the scent carried therein, or to said second end to permit the scent to be released from said container through said first end opening, said securing means including a pair of mating surfaces, one of said mating surfaces being located on said cover and the other mating surface being located on said container, each of said mating surfaces including raised surface portions,

said cover having a generally circular cross-section, a solid end, an open end and a continuous side extending therebetween, said side having an inner surface and an outer surface, said inner surface containing said respective raised surface portions, said cover raised surface portions being designed to be threaded upon said respective raised surface portions on said container side wall in a direction originating from either of said container ends; and

(f) means disposed on said cover solid end for attaching said device to a separate object.

4,374,572
METHOD AND COMPOSITION TO INHIBIT STAINING OF PORCELAIN SURFACES BY MANGANESE
Robert H. Callicott, West Chester, Ohio, assignor to The Procter & Gamble Company, Cincinnati, Ohio
Continuation of Ser. No. 28,613, Apr. 9, 1979, abandoned. This application Feb. 17, 1981, Ser. No. 234,535
The portion of the term of this patent subsequent to Nov. 24, 1999, has been disclaimed.
Int. Cl.³ C02B *5/06;* **C11D** *3/37, 17/04;* **E03D** *9/02*
U.S. Cl. 239—37 **8 Claims**

1. A method of inhibiting the staining of surfaces in contact with water which contains at least about 50 ppb of manganese II ions and an oxidizing agent which would oxidize said manganese (II) ions to form the staining manganese (IV) ions; said method comprising the step of independently dispensing into said water which contains said manganese (II) ions and said oxidizing agent, from about 0.1 ppm to about 10 ppm of copolymers of alternating ethylene and maleic anhydride having a molecular weight between about 20,000 and 100,000 atomic mass units.

6. In an integrated toilet tank dispenser with independent first and second dispensing means, wherein said first dispensing means is adapted to dispense ingredients which provide at least 3 ppm of available chlorine to the water of a toilet bowl, and wherein said second dispensing means is adapted to receive a cake of second ingredients and to disperse a sufficient portion of said second ingredients to a toilet to provide 2 ppm to 30 ppm of said second ingredients to a toilet bowl, the improvement wherein said cake of second ingredients is a solid cake comprising:

A. 5% to 30% of a material adapted to inhibit manganese staining, consisting essentially of copolymers of alternating ethylene and maleic acid anhydride having a molecular weight between about 20,000 and 100,000 atomic mass units;

B. 50% to 90% of a water-soluble surfactant selected from the group consisting of the hypochlorite-stable alkyl sulfates and paraffin sulfonates; and

C. 0% to 45% of optional ingredients selected from the group consisting of dyes, perfumes, water-soluble salts, and mixtures thereof;

wherein said cake of second ingredients is essentially free of manganese (II) oxidating material and phosphate esters.

4,374,573
APPARATUS FOR SHREDDING RUBBER TIRES AND OTHER WASTE MATERIALS
Michael W. Rouse, 2412 Tipperary Ct., West Linn, Oreg. 97068, and Robert L. Thelen, 509 N. 3rd, Woodburn, Oreg. 97071
Continuation-in-part of Ser. No. 37,360, May 8, 1979, abandoned. This application Aug. 21, 1980, Ser. No. 179,993
Int. Cl.³ B02C *18/18, 18/22*
U.S. Cl. 241—101.7 **18 Claims**

1. Apparatus for comminuting scrap material, including reinforced resilient materials such as vehicle tires, comprising:

(a) cutting means including an intermeshed pair of rotatably mounted generally cylindrical cutter rolls, said intermeshed cutter rolls having an infeed side, each of said cutter rolls including a plurality of axially spaced apart cutter discs, said cutter discs having opposed side surfaces and having planar peripheral surfaces which meet said side surfaces defining cutting edges at the intersections therebetween, said cutter rolls being intermeshed with one another so that a plurality of said cutter discs of each of said cutter rolls extend into the interstices between the cutter discs of the other said cutter rolls, with a side of

each of said cutter discs of one of said cutter rolls overlapping and being closely adjacent to a side of one of said cutter discs of the other of said cutter rolls, for cooperatively forcing respective portions of said scrap material into the interstices between neighboring ones of the cutter discs of the opposite one of said cutter rolls, thereby shearing said scrap material into pieces having respective dimensions corresponding to the spacing between neighboring ones of the cutter discs on one of said cutter rolls;

(b) feeder-stripper means located on said infeed side of said cutter rolls, for forcing said scrap material into a position on said infeed side where said cutter rolls can engage said scrap material, and for thereafter stripping said pieces of said scrap material from said interstices between said cutter discs, said feeder-stripper means comprising a pair of generally cylindrical feeder-stripper rolls, each of said feeder-stripper rolls including a plurality of feeder-strip-

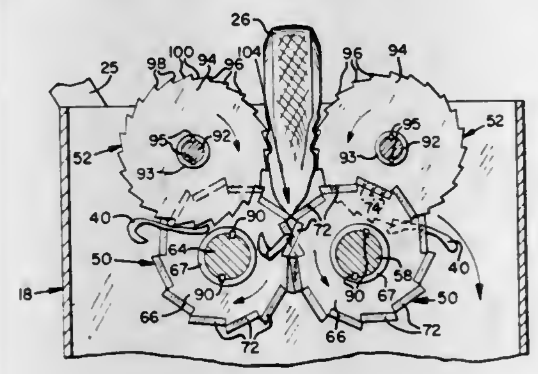

per discs, said feeder-stripper rolls being radially spaced apart from one another, defining a space through which to feed said scrap material toward said intermeshed cutter rolls, and each of said feeder-stripper rolls being intermeshed with a respective one of said cutter rolls, with a respective one of said feeder-stripper discs extending radially into each of said interstices between the cutter discs of each cutter roll to a depth sufficient for forcing substantially all said pieces of scrap material from said interstices; and

(c) drive means for counterrotating said intermeshed cutter rolls about their respective axes so that the peripheral surfaces of respective cutter discs of said cutter roll move toward one another on said infeed side, and for rotating each of said feeder-stripper rolls in the same direction as the respective one of said cutter rolls with which it is intermeshed.

4,374,574
CONDIMENT GRINDER-DISPENSER
Tom David, P.O. Box 541, Nantucket Island, Mass. 02554
Filed Nov. 3, 1980, Ser. No. 203,679
Int. Cl.³ A47J *42/00;* **B02C** *13/30*
U.S. Cl. 241—169.1 **8 Claims**

1. A hand-held and hand-operated condiment grinder dispenser comprising in combination:

(a) a housing adapted to be held by an encircling grip of the user's hand;

(b) a grinding mechanism mounted in said housing and including a rotary grinding wheel and a skirt surrounding said grinding wheel and cooperating therewith for comminuting and dispensing condiment upon rotation of said grinding wheel in a sole, operative direction;

(c) an overrunning clutch mounted in said housing and having a driven part connected to said grinding wheel for rotating therewith as a unit; said clutch further having a driving part rotatable in an operative direction and in an opposite, inoperative direction; said driving part transmitting an operating torque to said driven part solely when said driving part rotates in said operative direction thereof; the direction of said operating torque coinciding with said operative direction of said grinding wheel;

(d) an operating lever mounted on said housing to be movable in a forward direction and in a return direction; said operating lever being coupled to said driving part of said clutch for rotating said driving part in the operative direction thereof when said operating lever moves in said forward direction and for rotating said driving part in the inoperative direction thereof when said operating lever moves in said return direction; said operating lever being positioned with respect to said housing such that said operating lever being included in the encircling grip of the user's hand for effecting said forward motion; and

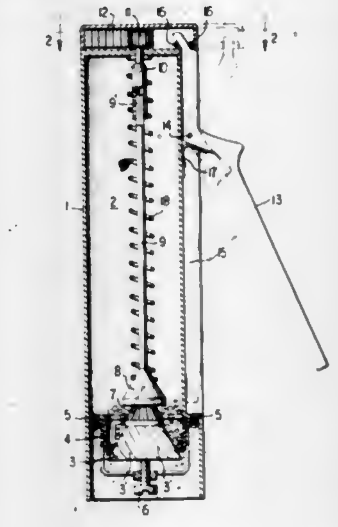

(e) a spring urging said operating lever in the return direction, whereby upon release of said operating lever by the user's hand after a motion of said operating lever in the forward direction, said spring moves said operative lever in the return direction and further moves said driving part of said clutch in the inoperative direction relative to said driven part of said clutch and relative to said grinding wheel of said grinding mechanism.

4,374,575
WINDING MACHINE FOR CONTINUOUSLY WINDING STRIPS OF WEB MATERIAL INTO ROLLS
Rolf Lerch, Darmstadt-Eberstadt, and Franz Held, Gross-Zimmern, both of Fed. Rep. of Germany, assignors to Maschinenfabrik Goebel GmbH, Darmstadt, Fed. Rep. of Germany
Filed Dec. 5, 1980, Ser. No. 213,485
Claims priority, application Fed. Rep. of Germany, Dec. 5, 1979, 2948881
Int. Cl.³ B65H *75/02*
U.S. Cl. 242—56.5 **4 Claims**

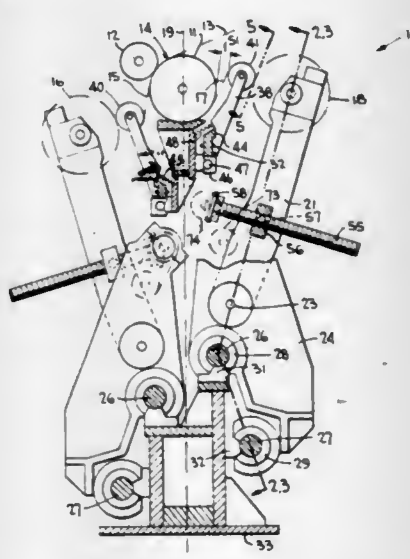

1. In a winding machine for winding up a plurality of strips cut from an elongated web after making initial contact with a main drum, the strips being looped partially around the main drum and being wound into a plurality of rewind rolls, contact

drums respectively bearing against said rolls, means maintaining said contact drums out of contact with said main drum during build-up of said rolls so as to define predetermined gaps with said main drum, and means for sensing the position of said contact drums relative to said main drum, the improvement wherein said maintaining means comprise spaced holders mounted for movement along an axis parallel to the central axis of said main drum, pairs of first support arms mounted on said holders for supporting said rolls for pivotal movement about pivotal axes lying parallel to said central axis, threaded elongated spindles, means pivotally mounted on said arms and threadedly engaging said spindles, means for rotating said spindles together for effecting simultaneous movement of said rolls about said pivotal axes as said means engaging said spindles threads therealong, and second arms supporting said contact drums, said second arms being mounted for pivotal movement about axes disposed at a side of said main drum opposite the side at which initial contact is made by said web.

4,374,576
SEMI-AUTOMATIC ROLL WINDING MACHINE
Ralph L. Ryan, East Hanover, N.J., assignor to Compensating Tension Controls, Inc., West Caldwell, N.J.
Filed Feb. 2, 1981, Ser. No. 230,634
Int. Cl.³ B65H *19/16, 19/08*
U.S. Cl. 242—58.4 **7 Claims**

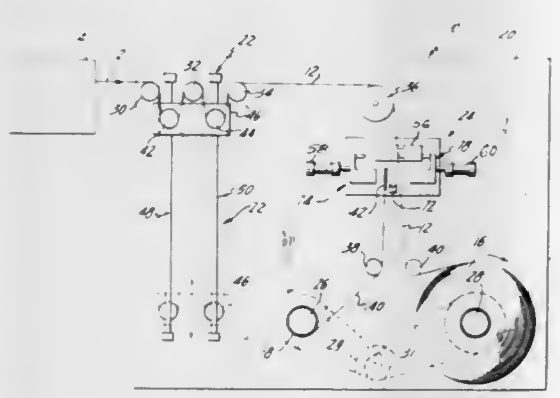

1. A roll winding machine for receiving a continuously running web from a source thereof and winding the web on a core to from a web roll, the machine comprising
(a) support means;
(b) a web accumulator supported means for receiving the continuously running web to be wound from the source thereof;
(c) a splicing device supported by the support means for receiving the web to be wound from the web accumulator;
(d) a first driven arbor supported for rotation by the support means and carrying the core upon which the web running from the splicing device is to be wound to form a first web roll;
(e) a second driven arbor supported for rotation by the support means adjacent the first arbor and carrying a second core having affixed thereto one end of a leader web and upon which a second web roll is to be wound;
(f) motor means for alternately rotatively driving said first and second arbors;
(g) said splicing device having
(g-1) a splicing carriage means for receiving and holding the distal end portion of said leader web and including cutting means for severing the running web to be wound so that a severed end portion is provided on the first web roll, and on the running web to be wound into said second web roll;
(g-2) web clamping means operative in one position to grip and prevent movement of the running web and, in another position, to release both the severed end portion of the first web roll and the running web to be wound into said second web roll;
(g-3) said splicing carriage means including the cutting means being operative to cut the running web to be wound after it is wound to the extent predetermined on said first web roll and affix the severed end portion of the running web to be wound into said second web roll to the distal end portion of the leader web so that the running web is capable of being wound on the second core supported on the second arbor upon movement of the clamping means to a position to release the running web and the leader connected to said second core.

4,374,577
ADAPTER ASSEMBLY FOR FLAT TRAJECTORY FLIGHT
Michael A. Brown, Columbia, and Chris A. Kalivretenos, Hyattsville, both of Md., assignors to The United States of America as represented by the Secretary of the Navy, Washington, D.C.
Filed Jan. 14, 1976, Ser. No. 649,615
Int. Cl.³ F41G *7/00*
U.S. Cl. 244—3.21 **20 Claims**

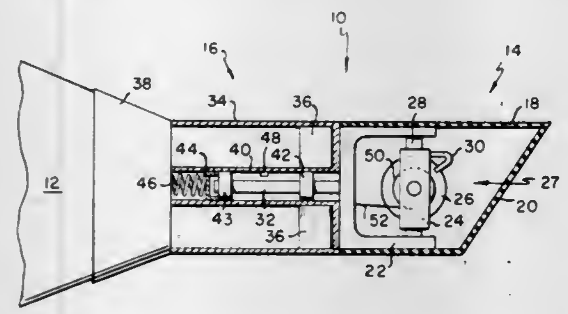

1. An adapter assembly attachable to the nose portion of an unguided projectile to provide the projectile with a substantially flat-trajectory flight capability comprising:
an aerodynamic lift-generating section including both a lift-producing device and a separate stabilizing mechanism directly coupled to said device;
a separate and distinct actuator housing attachable to the nose portion of a projectile;
means for rotationally coupling said lift-generating section to said actuator housing; and
inertia means within said actuator housing to initiate operation of said stabilizing mechanism,
said adapter assembly producing a stabilized, vertically-oriented lift to counter the projectile weight.

4,374,578
AERIAL CARGO DELIVERY SYSTEM
Eddie D. Banks, Renton, Wash., assignor to The Boeing Company, Seattle, Wash.
Filed Jul. 18, 1980, Ser. No. 170,566
Int. Cl.³ B64D *1/12*
U.S. Cl. 244—137 R **2 Claims**

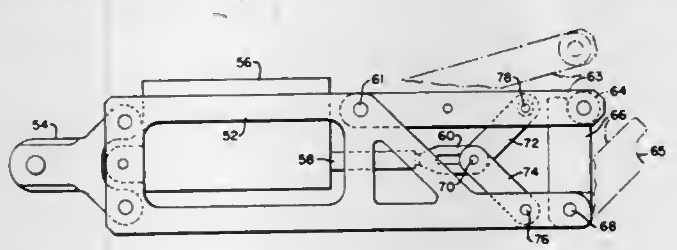

1. In an aerial cargo delivery system of the type including strap means for securing cargo bundles to the floor of an aircraft, the improvement comprising a gate release assembly for selectively releasing said strap means to permit said bundles to pass through a rear cargo opening in the aircraft, said gate release assembly comprising a pair of spaced apart plates carrying therebetween a first pair of link arms pivotally connected to said plates at one of their ends and carrying a roller therebetween at their other ends, an actuator carried between said plates, a latch pivotally connected at one end between said plates to move between cargo restraining and cargo releasing positions and carrying a recess at the other end, said recess engaging said roller when said latch is in said cargo restraining position; a second pair of link arms pivotally connected at one end thereof to each other and to said actuator, one arm of said second pair being pivotally connected to said first pair of link arms at its other end and the other arm of said second pair being pivotally connected to said plates at its other end, whereby said actuator will, upon actuation, cause said second pair of link arms to move said first pair of link arms about their pivot which will in turn move said roller out of said recess and permit said latch to move said cargo releasing position.

4,374,579
SPACECRAFT CONFIGURATION PERMITTING A CONTINUOUS THREE-AXES ATTITUDE CONTROL
Udo Renner, Leiden, and A. Werner Preukschat, Noordwijk, both of Netherlands, assignors to European Space Agency, France
Filed Dec. 16, 1980, Ser. No. 217,165
Claims priority, application France, Dec. 27, 1979, 79 31779
Int. Cl.³ B64G *1/10*
U.S. Cl. 244—158 R **2 Claims**

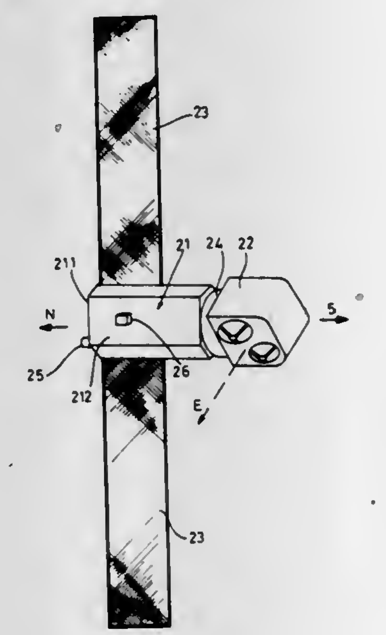

1. A spacecraft configuration comprising a service module, said service module having first sensor means arranged to point to a first inertially fixed target and second sensor means arranged to point to a second inertially fixed target, said first and second sensor means providing 3-axes attitude control information for stabilization of the spacecraft; solar arrays rigidly attached to the service module such that when they are deployed in orbital configuration, they leave the field of view of said first and second sensor means unobstructed; rotary interface means having first attachment means on one face for attachment to a first face of the service module and having second attachment means on its opposite face; and a payload module attached to said second attachment means on the rotary interface means; said rotary interface means being arranged to permit said payload module to continuously point to the earth.

4,374,580
SECURING DEVICE
Gerald G. Minor, 8800 N. Henley, Oklahoma City, Okla. 73113
Filed Jun. 16, 1980, Ser. No. 159,466
Int. Cl.³ A47H *1/10*
U.S. Cl. 248—317 **5 Claims**

1. A device for securing objects with respect to spaced apart first and second pierceable and opposed stationary surfaces comprising:
a first piercing engagement member for engaging and piercing said first stationary surface to provide a first base secured against movement along said first stationary surface;
a second piercing engagement member for engaging and piercing said second stationary surface to provide a second base secured against movement along said second stationary surface, said first and second engagement members being disposed along a common axis;
spreading bar means connected to said first and second engagement members for relatively spreading said first and second engagement members to securely pierce and press each of said engagement members against a respective one of said first and second stationary surfaces

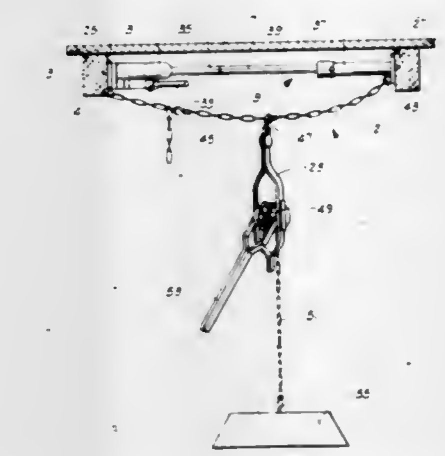

wherein said spreading bar means includes a jack for spreading said first and second engagement members into said first and second stationary surfaces and providing a compression load bearing support between said first and second engagement members; and
flexible suspension means extending in a single flexible span from said first to said second engagement member and attached thereto for suspending and securing an object with respect to said first and second engagement members adjacent to said first and second stationary surfaces, said flexible suspension means flexibly bearing the load of an object such that the load of an object suspended and secured to said suspension means is received as a compression load on said spreading bar means and as a load urging said first and second engagement members to move along said first and second stationary surfaces.

4,374,581
SUPPORT UNIT
Alexander D. Karapita, 38 Robinter Dr., Willowdale, Ontario, Canada M2M 3R2
Filed Jul. 9, 1979, Ser. No. 55,526
Int. Cl.³ B42F *13/00*
U.S. Cl. 248—337 **10 Claims**

1. A suspension support unit comprising:
a vertical cylinder and means at the upper end of the cylinder for suspension thereof;
brake means slidable in the cylincder and having grip means at the lower end thereof, the brake means comprising a pair of spaced collars slidably mounted on a shaft coaxially in the cylinder, the shaft projecting below the cylinder and carrying a grip at the lower end thereof, the shaft being axially movable to move the collars selectively towards and away from one another, the collars being bevelled at their outer opposing edges to form a raceway, the angle of the bevelled outer edge of each collar being between 35° and 70° with respect to a transverse plane of the cylinder normal to its axis and the angles being equal, a plurality of spherical bearing being located in the race-

way and movable, on moving the collars one towards the other, outwardly to bear against the cylinder and lock the brake means with respect to vertical movement therein with the brake means and the shaft being jointly rotatable about the axis of the shaft; and

means connected with the brake means to support an object, said support means comprising an outer sleeve concentric with the cylinder, the outer sleeve being slidable on the

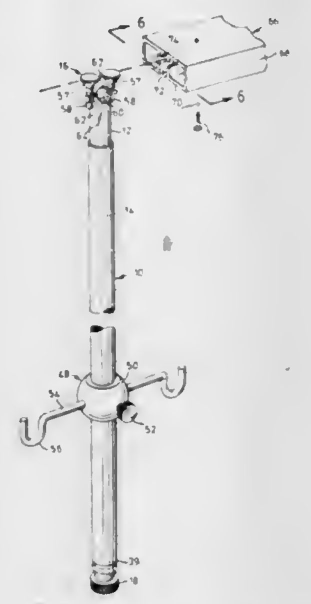

cylinder and mounted on the grip, and means projecting outwardly from the sleeve to support an object;

the collars being freely slidable on a shaft, stop means on the upper end of the shaft, and a tube concentric with the shaft, the lowermost of the collars bearing against the upper end of the tube and the lower end of the tube bearing against a plug in the lower end of the sleeve, the shaft being freely slidable in the plug through an aperture therein and engaging the grip beneath the plug.

4,374,582

COMPRESSED AIR-ACTUATED VALVE MEANS

Guido Heyneman, Knokke, Belgium, assignor to Siemens Aktiengesellschaft, Berlin & Munich, Fed. Rep. of Germany

Filed Feb. 25, 1980, Ser. No. 124,360
Claims priority, application Fed. Rep. of Germany, Mar. 19, 1979, 2910752
Int. Cl.³ F16K *31/122*
U.S. Cl. 251—62 **3 Claims**

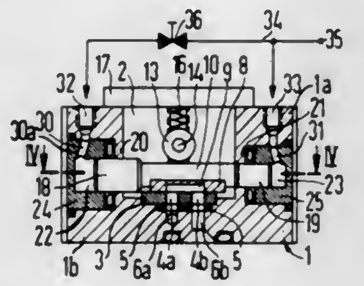

1. In a compressed air-actuated valve means for attachment to various devices, such as useful in chemical analyses, wherein a piston means actuates a slide member in the piston thrust direction and said slide member linearly glides on a base member having at least two spaced-apart apertures extending approximately perpendicularly to the gliding surface of said slide member, said apertures being connectable with one another on one side of said base member via at least one groove correspondingly arranged on a surface of said slide member and being connectable on the other side of said base member with intake and discharge nozzles, wherein the improvement comprises:

said slide member (**8**) is interchangeably housed is a slide mount (**10**), said base comprises a pressure-plate (**3**) which is interchangeably housed in a valve housing (**1**), said apertures (**4***a* . . . **4***f*) in said pressure-plate member (**3**) are connected via sealing rings (**5**) at the surface of said pressure-plate member (**3**) facing away from said slide member (**8**) with fluid-passageways (**6***a*, **6***b*, **37**) for connections external of said housing (**1**), at least one of such passageways (**37**) being directly connected with an open-bottom container (**41**) and being surround by a concentrically positioned groove (**38**) having a sealing ring (**39**) therein for supporting the open bottom of said container (**41**), said container (**41**) being provided with a beaded-edge (**40**) about the periphery of said open bottom thereof and which is adapted for positioning on said sealing ring (**39**), and an elastic ring (**42**) having an opening approximately corresponding to said beaded-edge (**40**) is snapped about said beaded-edge and attached to a surface of said housing.

4,374,583

SLEEVE VALVE

Burchus Q. Barrington, Duncan, Okla., assignor to Halliburton Company, Duncan, Okla.

Filed Jan. 15, 1981, Ser. No. 225,163
Int. Cl.³ F16K *31/50, 3/36*
U.S. Cl. 251—324 **13 Claims**

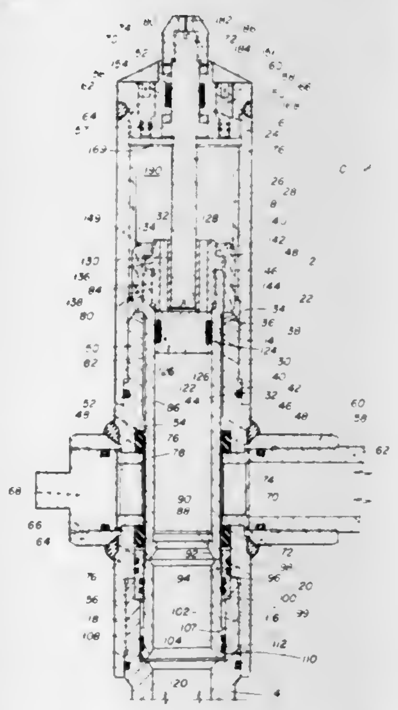

1. A valve for controlling the flow of fluid comprising:

valve body housing means having an inlet and an outlet thereto;

sleeve assembly means retained within the valve body housing means, the sleeve assembly means comprising:

annular sliding flow sleeve means slidably retained within the valve body housing;

outlet sleeve means abutting the annular sliding flow sleeve means and slidably, sealingly engaging the interior of the valve body housing means;

seal sleeve means sealingly engaging the valve body housing means and slidably, sealingly engaging the outlet sleeve means;

sleeve plug means secured to one end of the annular sliding flow sleeve means;

sleeve cap means secured to the annular sliding flow sleeve means; and

sliding piston means slidably, sealingly engaging the interior of the annular sliding flow sleeve means; and

actuation assembly means secured to the valve body housing means and secured to the sleeve assembly means.

4,374,584

HANDRAIL

Naum Pokhis, and Yakov Pokhis, both of 1850 No. Whitley Ave. # 317, Hollywood, Calif. 90028

Filed Dec. 22, 1978, Ser. No. 962,986
Int. Cl.³ E04H *17/00*
U.S. Cl. 256—1 **12 Claims**

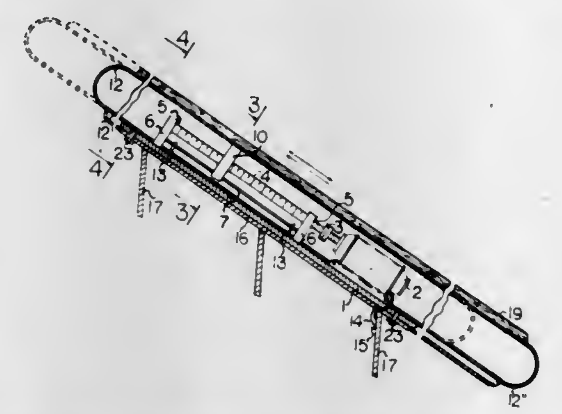

1. A handrail comprising an elongated stationary base element; a support element adapted to be grasped by and support a user, said support element being movable relative to said base member in a direction of elongation thereof; means for moving said support element relative to said base element, said moving means being means for reciprocating said support element relative to said base element and including a motor and transmission means which is driven by said motor and engaged with said support element so as to reciprocate the latter, said motor being reversible, and said transmission means including a screw member rotated by said motor, and a nut member which is connected with said support element and through which said screw extends so that when said motor rotates said screw in two opposite directions said nut member and thereby said support element connected thereto reciprocate relative to said base member; and a guiding member which is immovably connected to said base element and extends through said nut member in the direction of elongation whereby said nut member is guided by said guiding member during the reciprocation.

4,374,585

APPARATUS FOR THE DIRECT REDUCTION OF IRON ORES

Gero Papst, Buxtehude; Günther Röpke, Hamburg, and Hans J. Töpfer, Gifhorn, all of Fed. Rep. of Germany, assignors to Hamburger Stahlwerke GmbH, Fed. Rep. of Germany

Division of Ser. No. 18,977, Mar. 9, 1979, Pat. No. 4,248,623. This application Aug. 11, 1980, Ser. No. 176,894
Claims priority, application Fed. Rep. of Germany, Mar. 11, 1978, 2810657; Mar. 11, 1978, 2810701
Int. Cl.³ F27B *1/16*
U.S. Cl. 266—81 **9 Claims**

1. Apparatus for the direct reduction of iron ores characterized by:

(a) a reduction shaft furnace (1) having an upper opening (2) for the introduction of iron ores (3) and a lower opening (8) for the discharge of sponge iron product;

(b) a reduction zone (6) at whose lower end hot gas inlet passages (12) open in to the shaft furnace, which gas passages are arranged about the whole circumference of said furnace and are connected to a gas feed line (10) for hot reduction gas, and at whose upper end there is provided gas outlet (13) for waste gas;

(c) a cooling zone (7) below the reduction zone, with a lower inlet (18) and an upper outlet (21) for the cooling gas;

(d) a plurality of horizontally oriented gas distributor pipes (23) in said furnace beneath hot gas inlet (12) and above the cooling zone (7), said pipes (23) communicating with a source of hydrocarbon gas; and

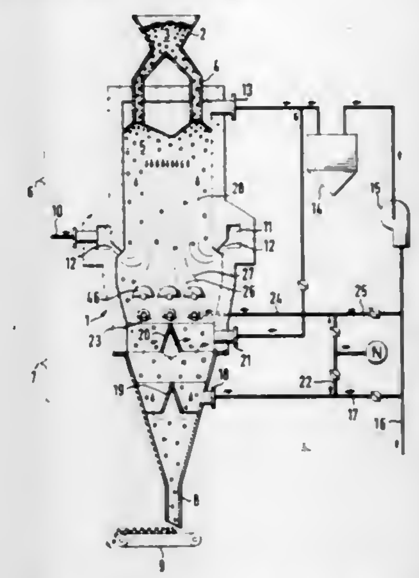

(e) a means (31 to 36) whereby the supply of hot reduction gas to the gas inlet passages (12) can be sector-wise interrupted or reduced.

4,374,586

DOCUMENT FEED SHEET ALIGNER

Richard A. Lamos, Delrey Beach, Fla., and Alfonso A. Rosati, Longmont, Colo., assignors to International Business Machines Corporation, Armonk, N.Y.

Filed Dec. 19, 1980, Ser. No. 218,139
Int. Cl.³ B65H *3/06, 9/04*
U.S. Cl. 271—37 **21 Claims**

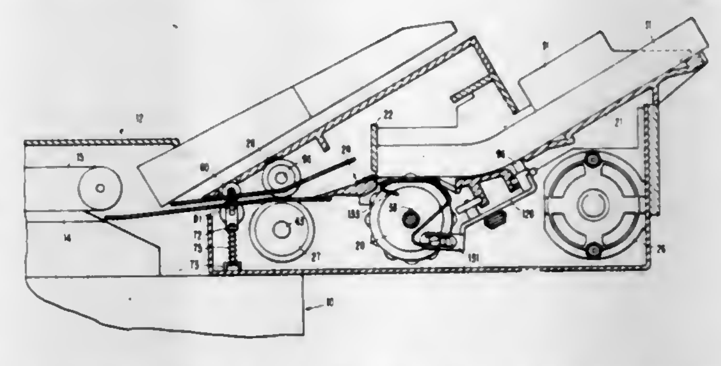

21. In a document feeder having shingler means for shingling documents from a stack, the improvement comprising:

a bin for supporting a stack of documents, said bin having at least one reference edge against which a stack of documents is registered;

an alignment edge connected to the reference edge and positioned therefrom in the direction of forward sheet motion, said alignment edge being laterally offset from said reference edge, into the path of forward sheet motion;

a sheet feeding means, including the shingler means disposed to shingle sheets from the bottom of the stack; and

a sheet separator means disposed to accept and feed individually shingled sheets in seriatim and to coact with the sheet feeding means to feed individual sheets in a clockwise direction until the edge of the sheet adjacent to the alignment edge contacts said edge for lateral alignment prior to delivery into a utilization device.

4,374,587
EXERCISE TREADMILL
Ralph Ogden, 1304 Fisher St., Munster, Ind. 46321
Continuation-in-part of Ser. No. 175,516, Aug. 5, 1980, Pat. No. 4,344,616. This application Jan. 21, 1981, Ser. No. 226,766
Int. Cl.³ A63B *23/06*
U.S. Cl. 272—69 **12 Claims**

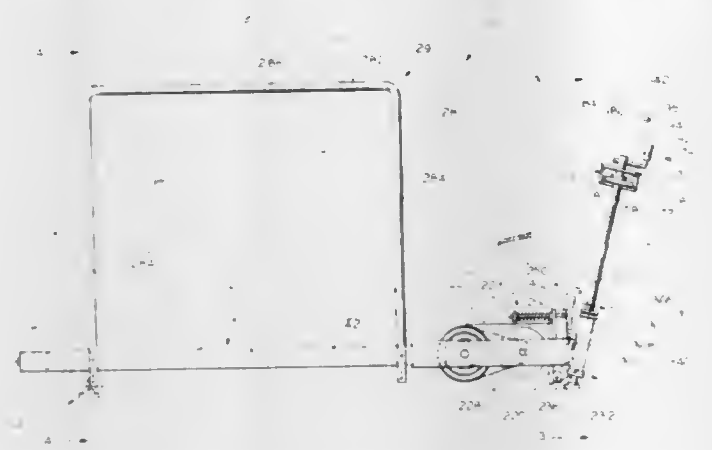

1. In an exercise treadmill including a generally planar slider bed having a head end, a tail end, and a top surfacing extending substantially between said ends thereof, an endless belt trained over said slider bed defining an upper belt run overlying said slider bed top surfacing and a lower run passing under said slider bed, means for driving said belt for movement of said belt upper run from said head end to said tail end of said slider bed, said slider bed having secured to same adjacent said head end thereof a cross member extending transversely thereof, a pair of screw members threadedly mounted in said cross member in spaced apart relation and for rotation about upright axes that are in parallelism and that are inclined at like acute angles off perpendicular relationship relative to the plane of said slider bed, with each of said screw members having a foot journalled thereof, and means for simultaneously rotating said screw members in the same direction in forward and reverse directions for threading said cross member longitudinally of said screw members to raise and lower said slider bed head end,

the improvement wherein:

said cross member includes a pair of nut assemblies, with one of the screw members being threadedly received in one of said nut assemblies and the other of the screw members being threadedly received in the other of said nut assemblies,

said nut assemblies each comprising;

a tubular member of polygonal transverse cross-sectional configuration having a first nut member keyed to the lower end of same and a second nut member keyed to the upper end of same,

with the screw member of each nut assembly being threadedly engaged by said nut members thereof,

said second nut members being mounted relatively to its tubular member for lost motion longitudinally thereof.

4,374,588
ISOKINETIC EXERCISE DEVICE WITH SPEED CONTROL
Roger Ruggles, Blue Springs, Mo., assignor to Isokinetic Sales Co., Independence, Mo.
Filed Dec. 15, 1980, Ser. No. 216,326
Int. Cl.³ A63B *21/32*
U.S. Cl. 272—132 **9 Claims**

1. An exercise device comprising:

a first plate member;

a second plate member;

a shaft member extending between said first and second members and presenting a common axis of rotation;

handle means on at least one of said plate members for providing a user rotation thereto;

a floating plate interposed between said plate members in axial and rotatable movement relative to said shaft;

a series of angularly spaced and paired arcuate raceways positioned adjacent the opposing faces of one of said plate members and said floating plate, each raceway of said pair of raceways aligned in a generally opposed relationship therebetween;

ball means movable along said paired raceways;

means for captivating said ball means between said paired raceways at a selectable point of contact therealong, said captivation providing a driving connection between said floating plate and said one plate member for transmittal of forces produced by said user rotation;

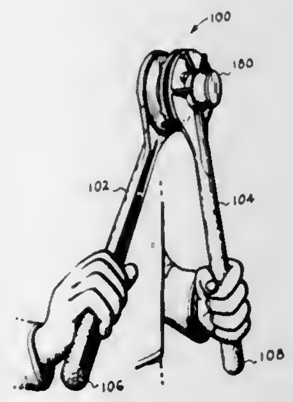

brake means operably associated with said floating plate and one of said plate members and positioned in a force communicating relationship with said driving connection in a manner to be operably responsive to said transmitted forces, said operable response retarding said user rotation of at least said plate member; and

means for changing the angle of contact of said captivated ball means with said paired raceways as presented by said raceways having a generally non-linear slope profile between the opposed ends thereof, said respective angle of contact changing said relationship between said brake means and said driving connection to effect the degree of said brake means operable response and said retardation to said user rotation.

4,374,589
HANDLE FOR TENNIS RACKET WITH ANTI-TORSION GRIP PORTION
Gordon E. Strickland, 434 Guinda St., Palo Alto, Calif. 94301
Continuation of Ser. No. 934,944, Aug. 18, 1978, abandoned, which is a division of Ser. No. 795,195, May 9, 1977, Pat. No. 4,149,721. This application Feb. 25, 1980, Ser. No. 124,438
Int. Cl.³ A63B *49/08*
U.S. Cl. 273—75 **4 Claims**

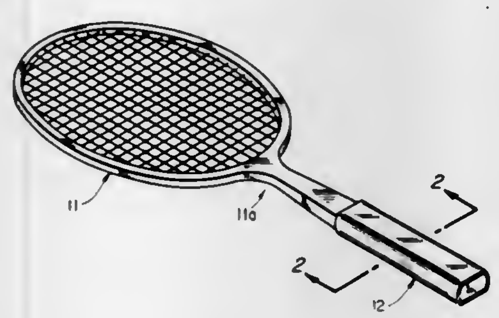

1. In a tennis racket having a head lying in a flat plane, and a handle having a grip portion attached to said head by a neck portion, said grip portion having a geometric center when viewed in cross section, the improvement wherein said grip portion comprises

a pair of flat surfaces disposed in parallel relationship relative to each other and to said plane, each of said flat surfaces being subtended by an obtuse angle having its vertex at said geometric center, and

a pair of at least substantially arcuate surfaces disposed transversely relative to said flat surfaces and said plane with each of said arcuate surfaces being subtended by an acute angle having its vertex at said geometric center and intersecting each of said flat surfaces to define a perceptible edge at the juncture thereof, each of said arcuate surfaces being defined by a radius having its center at said geometric center and having a length of about 0.75 inches.

4,374,590
MASS-PRODUCED MOLDED PLASTIC CESTA
Edward A. Everlith, 78 Alcolese Rd., and Jose J. Echaburu, 101 Bassick Rd., both of Trumbull, Conn. 06611
Filed Oct. 10, 1981, Ser. No. 319,948
Int. Cl.³ A63B *59/02*
U.S. Cl. 273—326 **15 Claims**

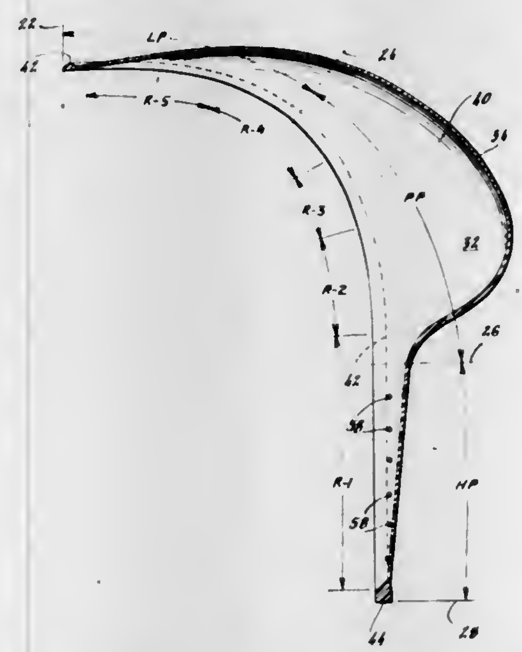

1. A mass-produced hand-held plastic cesta for catching and holding a ball and for discharging a ball therefrom in a controlled directional manner toward a playing surface, comprising;

A. a pocket portion having a recess for catching and holding the ball, said recess having an arcuate shaped bottom wall and a pair of parallel and oppositely disposed walls extending upwardly from said bottom wall;

B. a handle portion at one end of the cesta and contiguous to the pocket portion and having a substantially flat surface;

C. a ball launching portion contiguous with the pocket portion and disposed at the other end of the cesta, said ball launching portion having a substantially arcuate shaped wall contiguous to the pocket portion and being substantially flat at the end thereof to form a ball launching tip from whence the ball is discharged from the cesta, said bottom wall of the recess and said arcuate wall of the launching tip portion defining a path of travel for the ball as it leaves the recess for discharge from the launching tip; and

D. a rib formed along the rim of the cesta, said cesta being formed of plastic material having a characteristic wherein hardness is a function of thickness, said walls defining the path of travel of the ball within the cesta being of less thickness than the wall of the handle portion and said rib having a thickness greater than the other portions of the cesta.

4,374,591
STRUT-TYPE STEERING SKI SUSPENSION FOR SNOWMOBILES
Takashi Kobayashi, Hamamatsu, Japan, assignor to Yamaha Hatsudoki Kabushiki Kaisha, Iwata, Japan
Filed Jun. 18, 1980, Ser. No. 160,471
Claims priority, application Japan, Jun. 27, 1979, 54-80240
Int. Cl.³ B62B *17/04*
U.S. Cl. 280—21 R **8 Claims**

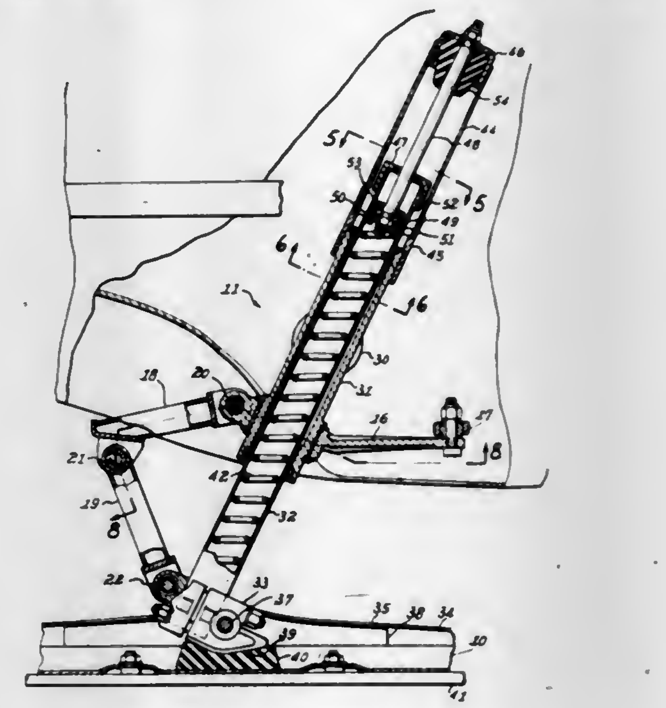

1. In a steering ski suspension for a snowmobile, said snowmobile having a frame, said suspension including a stationary cylinder fixed to said frame a movable cylinder slidably mounted in said stationary cylinder, and a ski mounted to the lower end of said movable cylinder so as to turn therewith, the improvement comprising: a cap member fixed to the upper end of said stationary cylinder; and coil spring bias means entirely confined within one of said cylinders and compressively opposed between a lower portion of said movable cylinder and said cap member or structure rigidly attached to said cap member, said movable cylinder being rotatably and axially movable in said stationary cylinder whereby to make the ski steerable and to provide an elastic suspension for said frame.

4,374,592
VEHICLE TRANSPORTER
John Geary, Olney, and David S. Johnson, Nr. Leighton Buzzard, both of England, assignors to Motorhouse Hire Limited, Buckinghamshire, England
Filed Mar. 11, 1980, Ser. No. 129,358
Claims priority, application United Kingdom, Mar. 12, 1979, 7908619
Int. Cl.³ B60D *7/02*
U.S. Cl. 280—476 R **6 Claims**

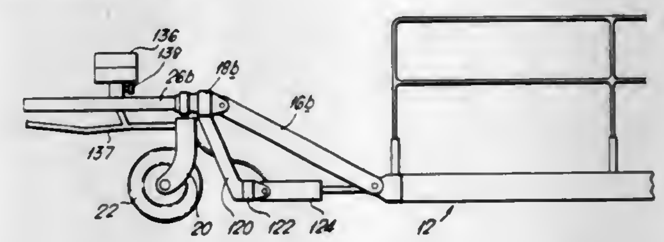

1. A vehicle transporter, providing a support structure for supporting the wheels of a vehicle to be transported, said structure comprising a platform substantially open at a rear end thereof and having two pairs of transversely spaced-apart parallel beams extending longitudinally of the vehicle, a wheel support surface member extending between each of said pairs

of beams below the level of the upper surfaces of the beams, and affording a supporting surface for the wheels of the vehicle to be carried, said pairs of beams, together with corresponding surface members extending therebetween, forming a pair of parallel tracks for supporting the vehicle to be transported, said structure being mounted on road-engaging wheel means, said wheel means including wheels disposed intermediate front and rear ends of said tracks, said road-engaging wheels lying entirely on the outer sides of the outermost ones of the beams forming the two supporting tracks; and another structure at the front of said platform rising above the level of the platform, and pivotally connected with the platform by limbs pivotable with respect to the platform about a first transverse horizontal axis and pivotable with respect to said fore-structure about a second transverse horizontal axis, said fore-structure having ground-engaging wheels, and extensible and retractable means being provided connected with said platform at a point substantially on said first axis and with said fore-structure at a point spaced from said axis, whereby if the angle of said fore-structure with respect to the road surface is kept constant, the level of the front of said platform can be adjusted by adjustment of said extensible and retractable means.

4,374,593
TOWBAR ASSEMBLY
Roger R. Smith, Lapeer, and James L. Celentino, Oakland, both of Mich., assignors to The United States of America as represented by the Secretary of the Army, Washington, D.C.
Filed May 22, 1981, Ser. No. 266,223
Int. Cl.³ B60D *1/14*
U.S. Cl. 280—491 E **7 Claims**

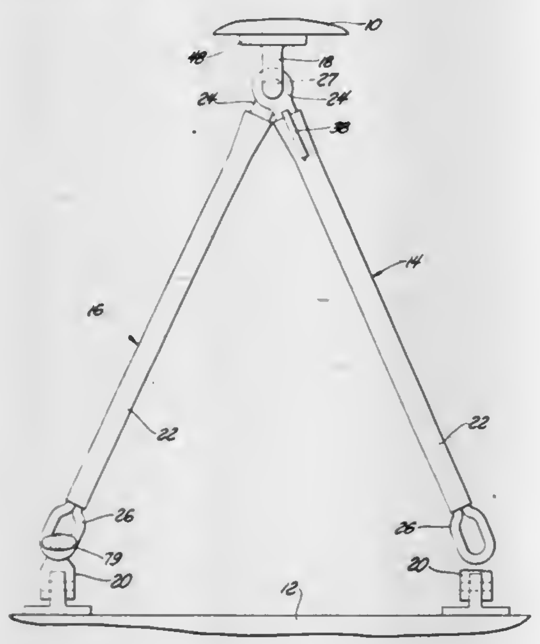

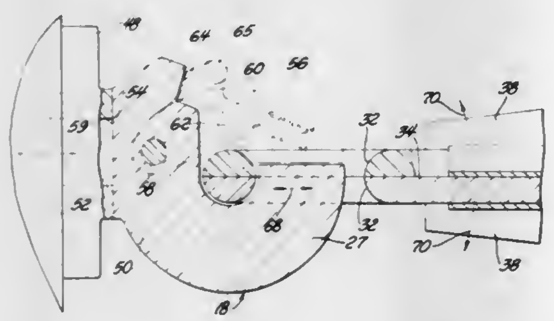

1. A towbar comprising an elongated tube, a front eye member affixed to one end of the tube, a rear eye member affixed to the other end of the tube; said front eye member comprising a flat plate having a spade portion extending into the tube, and a doughnut portion located outside the tube; said doughnut portion having a circular opening therethrough defining the front eye; the front end area of the tube being partially flattened so that its interior surfaces facially engage the opposite major faces of the spade portion; and a reinforcement gusset extending along one major face of said plate and partially flattened area of the tube to rigidify the tube-eye member connection against bending in a plane normal to the eye member plate.

4,374,594
EMERGENCY BUCKLE DEVICE
Takashi Kawaharazaki, Aichi, Japan, assignor to Kabushiki-Kaisha Tokai-Rika-Denki-Seisakusho, Aichi, Japan
Filed Aug. 15, 1980, Ser. No. 178,595
Claims priority, application Japan, Aug. 20, 1979, 54-114934[U]
Int. Cl.³ B60R *21/10*
U.S. Cl. 280—801 **5 Claims**

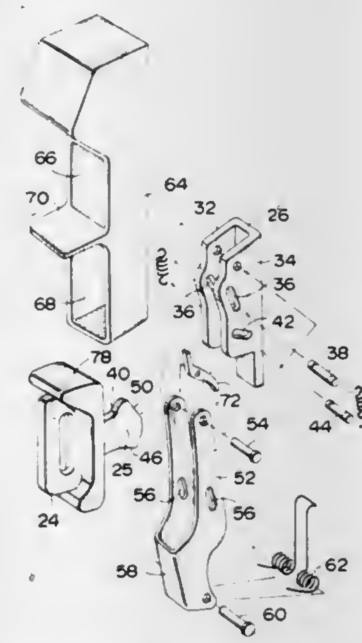

1. An emergency buckle device for use in a seatbelt system wherein a restraining webbing is automatically fastened to an occupant upon entering a vehicle and with which the occupant can manually unfasten the webbing, comprising:

(a) a main body having an opening and being secured to a door of the vehicle;

(b) a tongue plate engaged with an outer end of the occupant restraining webbing and having an insert portion manually inserted in a first direction through said opening into said main body;

(c) a release pin in said main body extending substantially perpendicular to said insert portion in said main body and moveable a predetermined distance substantially in the first direction;

(d) a lock pin in said main body extending parallel to said release pin and moveable a predetermined distance substantially perpendicular to the first direction, said lock pin being moved by said insert portion away from said release pin to form therebetween a path for receiving said insert portion when said insert portion is manually inserted through said opening into said main body;

(e) a resilient member between said lock pin and said release pin to bias both said pins toward each other so that both said pins secure the insert portion after the insert portion passes through the path between both said pins; and

(f) a release plate pivoted at one end thereof to said main body by a pin extending parallel to said lock pin and said release pin, said release plate being engaged at its other end with said release pin and having a press portion between its ends, said press portion being accessible to the occupant so that said release pin can be manually moved away from the lock pin to thereby release said insert portion from said main body whereby said insert portion can be manually removed from said body in a second direction opposite to said first direction.

4,374,595
METAL TO METAL SEALED JOINT FOR TUBING STRING
Bruce J. Watkins, Palos Verdes Estates, Calif., assignor to Hughes Tool Company, Houston, Tex.
Filed Jun. 16, 1980, Ser. No. 159,754
Int. Cl.³ F16L *39/00*
U.S. Cl. 285—137 A **15 Claims**

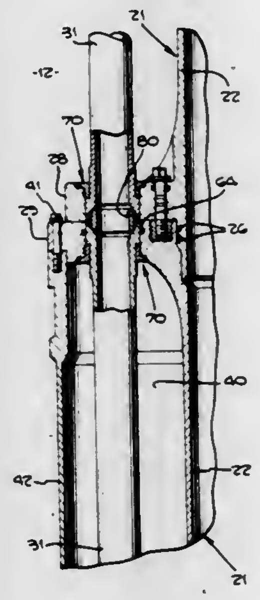

1. In a subsea well apparatus having axially-adjacent riser conduit sections connected at end surfaces of their respective mating flanges, each conduit section having opposite end flanges each having axially-aligned tubing string-receiving orifices, and a tubing string section having its opposite ends within said tubing string-receiving orifices, the improvement comprising the provision of:

means for receiving an axially-outward force at each end of said tubing string section; and

adjustable means for exerting an axially-outward force on said force-receiving means at each end of said tubing string section to adjust the axial position of the ends of the tubing string section relative each of said opposite end flanges.

4,374,596
PIPE-FORM CONNECTOR FOR CABLE DUCTS
Josef Schlemmer, and Adolf Konig, both of Munich, Fed. Rep. of Germany, assignors to Josef Schlemmer GmbH, Munich, Fed. Rep. of Germany
Filed Mar. 23, 1979, Ser. No. 23,328
Claims priority, application Fed. Rep. of Germany, Jun. 30, 1978, 2828893
Int. Cl.³ F16L *37/08*
U.S. Cl. 285—305 **4 Claims**

1. Pipe-form connector for cable duct ends comprising longitudinally split shell portions of the connector with complementary elongated joint elements of a direct push and pull assemblable and disassemblable type running substantially the full lengths of such elements and arranged parallel to longitudinal axes of the connector, the shells being assemblable at such edges and holdable in assembled position by the joint elements to form sections uniformly corresponding to cable duct ends and internally insertable into the duct ends to be connected with a snug fit but removable therefrom,

and being constructed of substantially the same form and size of said duct ends, but being sufficiently smaller than the duct ends only to the extent necessary for snug-fitting insertion therein to form interconnecting conduits between the various duct ends, substantially as extensions thereof, and

means to prevent longitudinal slippage between joint elements and to cause yielding of the connector as one of its ends enters a duct end and to permit length equilibration,

and further comprising exterior end catches on its ends to lock within corrugations or like recesses of a cable duct end by engaging within them,

and wherein the catch is supplemented by slots in front of

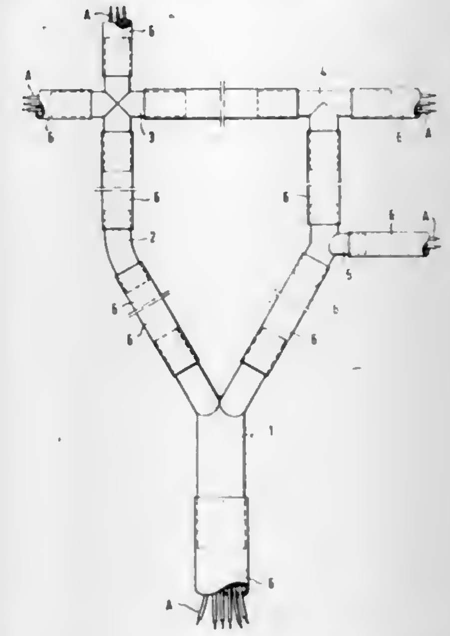

and behind it with the slot behind being wider than the slot in front to provide easier yielding on insertion of the pipe form connector than upon withdrawal from a cable duct end.

4,374,597
REMOTE CONTROL ARRANGEMENT
Haruo Mochida, Yokohama, Japan, assignor to Nissan Motor Co., Ltd., Yokohama, Japan
Filed Jan. 5, 1981, Ser. No. 222,454
Claims priority, application Japan, Jan. 10, 1980, 55-1621
Int. Cl.³ E05B *53/00;* G05G *9/02*
U.S. Cl. 292—8 **4 Claims**

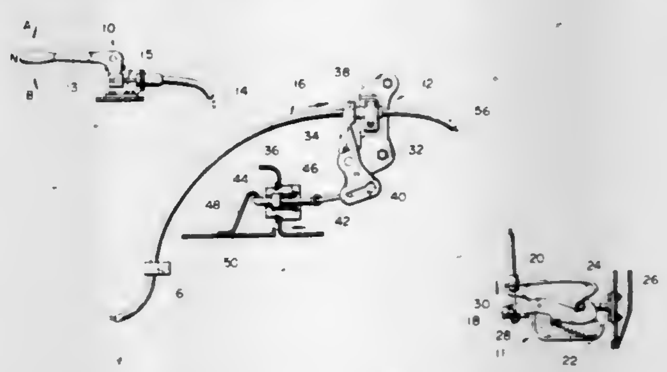

1. A remote control arrangement comprising:

a first mechanism having a stationary member and a movable member for actuating said first mechanism;

a second mechanism having a stationary member and a movable member for actuating said second mechanism;

a wire connected at one end to the movable member of said first mechanism and which is slidably disposed through the stationary member of said second mechanism;

an actuating mechanism having a stationary member and a lever, said lever being operatively connected to the other end of said wire for selectively moving said wire in first and second axial directions, the movable member of said first mechanism being moved to operate said first mechanism upon said wire being moved in said first axial direction;

a first flexible housing disposed about said wire, said first houring being connected at one end to the stationary member of said actuating mechanism and at the other end of the movable member of said second mechanism;

a second flexible housing disposed about said wire, said

second housing being connected at one end to the stationary member of said second mechanism and at the other end to the stationary member of said first mechanism; and
a stopper fixed on said wire and adapted to abut the stationary member of said second mechanism when said wire is driven in said second axial direction.

4,374,598
SECURITY BARS
Edwin C. Scott, 96 Capella St., Coorparoo Heights, Queensland 4151, Australia
Filed May 19, 1980, Ser. No. 150,947
Int. Cl.^{3} E05C *17/02*
U.S. Cl. 292—259 R **13 Claims**

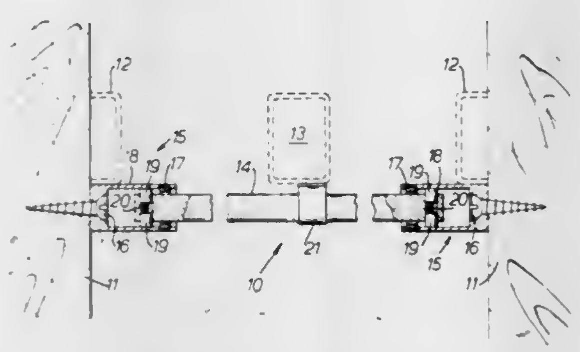

1. A security bar assembly for an opening including an elongate bar adapted to extend across an opening defined between a pair of members; a pair of socket connector assemblies each adapted to be secured to a respective one of said members defining said opening, each said socket assembly including a socket opening for receiving respective opposite ends of said bar; means for fastening said socket assemblies to the respective said members, said means being accessible only through the socket openings; and spring loaded connection means provided between at least one bar end and its corresponding socket assembly, said connection means being adapted to lock said bar end to said socket assembly.

4,374,599
SECURITY LOCK FOR DOOR
Alfred A. Hurt, 116 Harvey Ave., Oak Hill, W. Va. 25901
Filed Nov. 13, 1980, Ser. No. 206,474
Int. Cl.^{3} E05C *3/04, 17/18*
U.S. Cl. 292—270 **8 Claims**

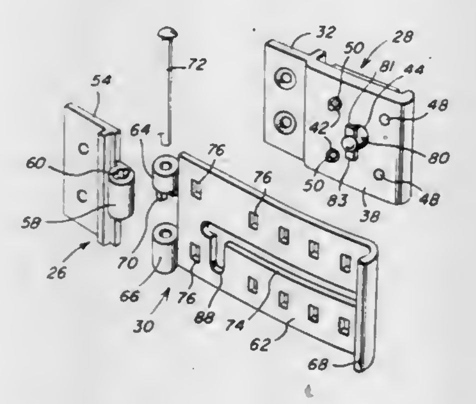

1. In combination with a structural member defining a door opening therethrough between first and second opposing marginal portions of said structural member and including a door having a first edge portion hingedly supported from said first marginal portion for swinging movement of a second opposite door edge portion toward and away from said second marginal portion, a releasable security lock including first and second components each including a base flange mounted on a corresponding second portion, said base flanges including extension flanges closely paralleling each other and said second portions and projecting outwardly from said second portions in the direction in which said door swings toward the open positions, one of said extension flanges defining a latching element receiving recess therein and the other of said extension flanges including a latching element projecting outwardly therefrom into said recess and shiftable relative to said other extension flange from an operative position to a retracted position withdrawn from said recess, pivot means pivotally supporting said one extension flange from the corresponding base flange for oscillation relative thereto about an axis generally paralleling the axis of oscillation of said door, said one extension flange and the corresponding base flange including co-acting latch means operative to releasably secure said one extension flange in operative position generally paralleling the other extension flange, said pivot means including means operative to allow shifting of said one extension flange relative to the corresponding base flange along the axis of oscilation of said one extension flange relative to the corresponding base flange between first and second positions, said latch means being inoperative, when said one extension flange is in said second position and operative when said one extension flange is in said first position.

4,374,600
LOCK-TYPE GRIPPING DEVICE FOR HANDICAPPED PERSONS
Willem D. van Zelm, 1005 Boyce Ave., Baltimore, Md. 21204
Filed Sep. 2, 1980, Ser. No. 182,960
Int. Cl.^{3} B25J *17/00;* **F16C** *11/10*
U.S. Cl. 294—19 R **6 Claims**

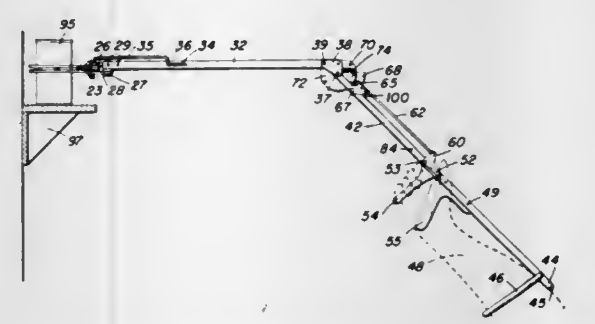

1. In a gripping device to aid handicapped persons in reaching and picking up objects, said gripping device having a gripping means, a forward arm member, a rearward arm member, and a control mechanism, a lock-type safety means, comprising:
a forward arm member;
a rearward arm member, said rearward arm member being pivotally connected to said forward arm member;
a control mechanism, said control mechanism being movably affixed to said rearward arm member, said control mechanism controlling the pivotal movement of said forward arm member toward the user and the gripping action of the device, said control mechanism having a remote thumb control means, said remote thumb control means controlling the activation of the pivotal operation of said forward arm member pivotally connected to said rearward arm member; and
a locking means, said locking means being slidably positioned on said rearward arm member, said locking means automatically releasably engaging said control mechanism and locking it in a predetermined position when said rearward arm member is raised to an elevated position, said locking means serving as a safety device to make said remote thumb control means inoperative, said locking means also being capable of releasably disengaging from said control mechanism to permit said thumb control to function in controlling said activation of said pivotal operation of said forward arm.

4,374,601
VEHICLE CARGO BOX COVER
Chester J. Taylor, Warren, and Carl O. Hinkley, Detroit, both of Mich., assignors to The United States of America as represented by the Secretary of the Army, Washington, D.C.
Filed Jun. 20, 1980, Ser. No. 161,548
Int. Cl.^{3} B60N *1/00*
U.S. Cl. 296—63 **1 Claim**

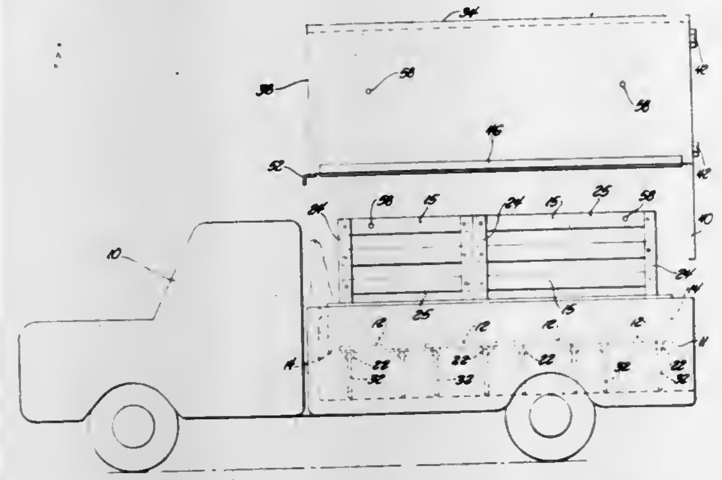

1. In a military truck having a cab cargo box, and two foldable troop seat assemblies detachably carried in the cargo box for supporting military personnel in seated positions facing the longitudinal centerline of the box, each troop seat assembly including a series of foldable seat elements (12) and a seat back structure (15) extending along and above one of the cargo box side walls: the improvement comprising a rigid cargo box cover mountable on the box to shield the seated military personnel from the weather; said cover comprising a roof panel, a front panel, two side panels, and a pair of doors individually swingably connectable to rear edges of the side panels for personnel access into or out of the cargo box; said panels being detachably connected together for disassembly into a relatively flat storage package having substantially the same plan dimension as the roof panel; the mounting mechanism for the cargo box cover comprising a first set of fastener bolts (50) trained between the cover side panels and the cargo box side walls, and a second set of fastener bolts (54) trained between the cover side panels and the seat back structures; the first fastener bolts (50) being vertically oriented to resist upward pull-out of the cover from the box; the second fastener bolts (54) being horizontally oriented to resist lateral displacement of the cover relative to the seat back structure; each panel being formed as a flat structure out of a material selected from plywood and fiberglass, the thickness of each panel being a maximum of one quarter inch; the roof panel having panel-attachment elements permanently affixed to three of its four edge areas, each panel-attachment element being an aluminum angle member (37) having one of its flanges adhered to a face area of the roof panel and its other flange extending normal to the roof panel plane; each side panel having a cargo box attachment element (46) permanently affixed to the panel lower edge, each cargo box attachment element being an aluminum angle member having an upstanding vertical flange adhered to a face area of the panel and another flange (48) extending horizontally normal to the plane of the side panel for placement on an upper edge of the cargo box side wall; said first fastener bolts (50) extending downwardly through said horizontal flange (48) into the cargo box side wall.

4,374,602
PAVEMENT CUTTER
Raymond A. Gurries, 1420 Eli Dr., Reno, Nev. 89511, and Harry J. Stormon, 908 Camino Real Dr., Sparks, Nev. 89431
Filed Feb. 23, 1981, Ser. No. 237,202
Int. Cl.^{3} E01C *23/12*
U.S. Cl. 299—37 **19 Claims**

1. A system for cutting pavement into chunks to facilitate excavation thereof comprising:
a first plurality of trasversely spaced blade elements having cutting edges which project forwardly and upwardly,;
a second plurality of transversely spaced blade elements having cutting edges which project forwardly and downwardly, blade elements of said first plurality being generally alternated with blade elements of said second plurality;
a frame for mounting the blade elements;
means for attaching the blade elements to the frame so that the blade elements are reciprocable forwardly and rearwardly;

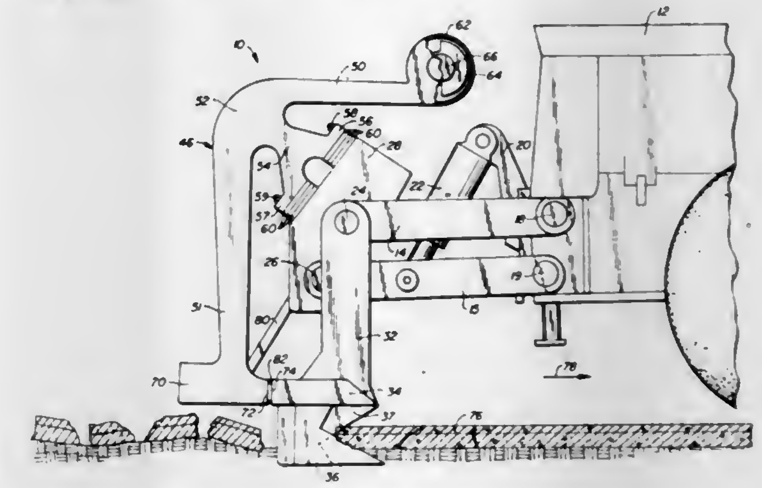

means for motivating the frame so that the cutting edges of the blade elements intersect the edge of the pavement; and
a resonant drive supported by the frame and having a vibratory output, said resonant drive including means for operatively coupling said output to the blade elements to drive said blade elements intermittently forwardly and against the pavement, adjacent cutting edges forcing the pavement upwardly and downwardly respectively to break the pavement into chunks.

4,374,603
ELECTRIC CONNECTOR FOR FLAT CABLE
Yukio Fukunaga, and Hiroshi Tsuda, both of Yokohama, Japan, assignors to Nissan Motor Co., Ltd., Yokohama, Japan
Filed Mar. 6, 1981, Ser. No. 241,084
Claims priority, application Japan, Mar. 10, 1980, 55-29256
Int. Cl.^{3} H01R *9/07*
U.S. Cl. 339—17 F **3 Claims**

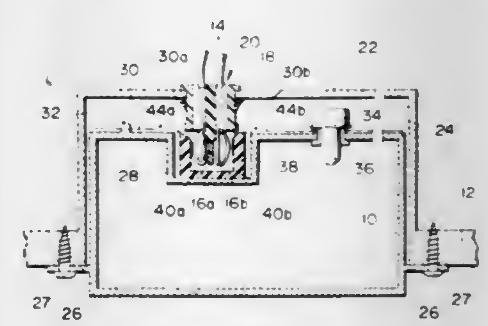

1. An electric connector comprising:
a plug including an insulating housing and a plurality of terminal elements in said housing, each of said terminal elements having at its one end a mating section which is exposed from a head portion of said housing;
a socket including a body having a recess to receive said head portion of the plug, and a printed wiring sheet attached to said body in a manner such that a plurality of exposed foil terminals of said sheet are enfolded in said recess; and
an equalizing float accommodated within said recess of said socket with clearance for floating sideways movement therewithin and having an opening with an inside dimension matching with said head portion of said housing, said head portion being snugly inserted into said opening of said float, upon coupling of said plug with said socket, in

a manner such that the exposed foil terminals are grippingly held between the mating sections of said plug and the inner surface of said float,

wherein said exposed foil terminals of said sheet are formed at the base sections thereof with plastically deformable corrugated portions.

4,374,604

CONTACT FOR AN ELECTRICAL CONNECTOR

Valentine J. Hemmer; R. Amelia Piscitelli, both of Sidney; Charles P. Fischer, and James C. Washburn, both of Bainbridge, all of N.Y., assignors to The Bendix Corporation, Southfield, Mich.

Filed Mar. 5, 1981, Ser. No. 240,735

Int. Cl.³ H01R *13/40*

U.S. Cl. 339—59 R **3 Claims**

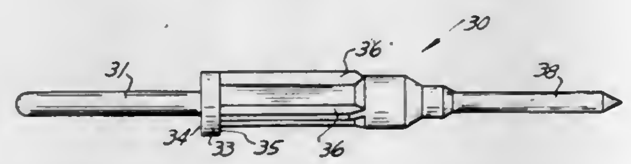

1. In combination with an electrical connector assembly of the type having a housing; an electrically nonconducting insert mounted within the housing, said insert including at least one bore extending therethrough and means for retaining a contact assembly in each bore of said insert said means including a plurality of resiliently deflectable fingers and a slot separating adjacent fingers; and an electrical contact mounted in each of said bores, each contact including a forward mating portion, a rear wire receiving portion and an enlarged middle portion having forwardly and rearwardly facing shoulders one of said shoulders engaging said deflectable fingers to retain said contact in said bore; the improvement wherein:

each of said contact assemblies includes a radial projection located at the rear wire receiving portion of said contact, said projection extending into the slot separating the deflectable fingers whereby, each of said contact assemblies is prevented from rotating in said bore.

4,374,605

AN ASSEMBLY OF AN ELECTRICAL CONNECTOR AND PYROTECHNIC IGNITER

Sven-Erik Bratt, Karlskoga, Sweden, assignor to Aktiebolaget Bofors, Bofors, Sweden

Filed Sep. 2, 1980, Ser. No. 183,671

Claims priority, application Sweden, Sep. 3, 1979, 7907293

Int. Cl.³ H01R *13/658*

U.S. Cl. 339—143 R **3 Claims**

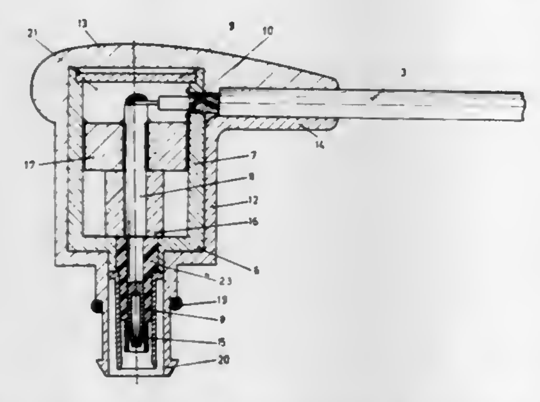

1. An assembly of an electrical connector for delivering current, and a pyrotechnic igniter for receiving said current, comprising:

an igniter element for igniting a primer charge, said igniter element having first and second concentric connection elements;

a connector for supplying an igniting current to said igniter element, comprising:

a metallic housing having a first opening for receiving a two conductor cable, one of said conductors being connected to said housing;

first and second concentric tubular connection elements attached to said housing, said tubular connection elements being adapted to mate with said igniter connection elements, one of said tubular elements being electrically connected with said housing and the other insulated therefrom; and

a high frequency filter within said housing, said filter connecting the remaining of said conductors to the remaining of said tubular connection elements, whereby igniting current is supplied from said cable to said igniter and high frequency induced signals are inhibited from entering said igniter.

4,374,606

DIELECTRIC PLUG FOR A COAXIAL CONNECTOR

John C. Lathrop, Harrisburg, Pa., assignor to AMP Incorporated, Harrisburg, Pa.

Filed Nov. 26, 1980, Ser. No. 210,693

Int. Cl.³ H01R *13/40*

U.S. Cl. 339—177 R **3 Claims**

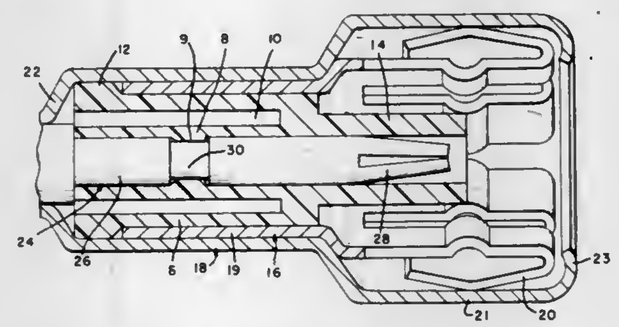

1. A dielectric plug of resilient material for press insertion into a connector shell body of a coaxial connector and for engaging a center contact means, comprising:

a tubular forward portion;

a tubular rear portion including an inner portion and an outer portion having forward ends integrally joined to said forward portion and being coaxially spaced from one another by an air gap therealong, said inner portion and said forward portion having a continuous axial bore extending therethrough;

said outer portion resiliently exerting radial spring retention force on the shell body after insertion of the dielectric plug therein;

said inner portion having annular ridge means projecting into said axial bore for resiliently engaging complimentary means of the center contact means when the center contact means is positioned in said axial bore; and

said air gap compensating for impedance mismatch caused when outer conductor means and center conductor means of a coaxial cable means are respectively terminated to the shell body and center contact means.

4,374,607

ELECTRICAL PIN AND SOCKET CONNECTOR

Edward J. Bright, Elizabethtown; Hitesh Cherry, Harrisburg; Robert E. Deboff, Mt. Joy; James L. Fedder, Middletown, and Tom R. Williams, Elizabethtown, all of Pa., assignors to AMP Incorporated, Harrisburg, Pa.

Filed Apr. 29, 1981, Ser. No. 258,820

Int. Cl.³ H01R *11/22*

U.S. Cl. 339—253 R **4 Claims**

1. A pin and socket connector of the type formed by the pin being telescopingly received in the socket, said connector comprising:

a. an elongated pin of conductive material having cable receiving means at one end and cylindrical, socket insertion means at the opposite end, said insertion means being slotted to define a plurality of spring beam members and further having a plurality of outwardly projecting teeth encircling the circumference of the insertion means at a location rearwardly of its free end;

b. removable means positioned on the insertion means adapted to removably hold the spring beam members together in a compressed position; and

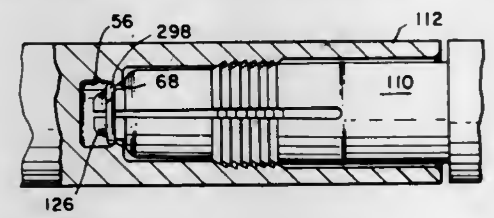

c. an elongated socket having cable receiving means at one end and a receptacle at the opposite end adapted to receive the insertion means of the pin with the receptacle wall containing a plurality of circumferential, tooth-receiving grooves and the socket further having means to remove the removable means upon the receptacle receiving the insertion means thereby permitting the spring beam members to expand, forcing the teeth into the teeth-receiving grooves to thereby lock the pin in the socket.

4,374,608

FIBER OPTIC CABLE

Gene S. Anderson, Elburn, Ill., assignor to Belden Corporation, Geneva, Ill.

Continuation of Ser. No. 9,536, Feb. 5, 1979, abandoned. This application Dec. 17, 1980, Ser. No. 217,230

Int. Cl.³ G02B *5/14*

U.S. Cl. 350—96.23 **14 Claims**

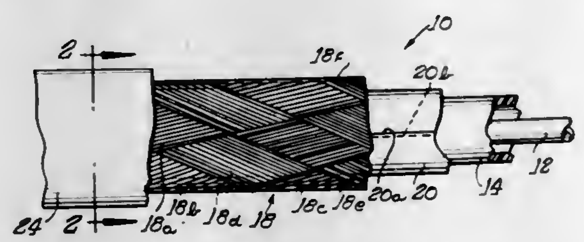

1. A fiber optic cable comprising at least one elongated fiber optic element, a nonmetallic tubular flexible and substantially radially noncompressible shield layer disposed substantially coaxially along the length of said fiber optic element in loose fitting relation thereon, and a nonmetallic braided strength member disposed coaxially along the length of said shield layer in tight fitting relation thereon, said braided strength member consisting of a plurality of discrete strands of nonmetallic material braided together along the length of said tubular shield layer so as to cover substantially the full outer peripheral surface of said tubular shield layer, said discrete strands being braided so that the discrete strands are wound in intertwined opposite helical relation along the length of said shield layer with the strands common to each helical direction being in substantially parallel contacting relation, said braided strength member having greater tensile strength and lower elongation per unit length than said fiber optic element so that the major portion of any tensile load acting on said cable is taken substantially by said braided strength member.

4,374,609

IMAGE PROJECTION SCREEN WITH DECREASED COLOR SHIFT AS A FUNCTION OF VIEWING ANGLE, AND METHOD OF MANUFACTURE

Howard G. Lange, Prospect Heights, Ill., assignor to Zenith Radio Corporation, Glenview, Ill.

Filed May 21, 1981, Ser. No. 265,938

Int. Cl.³ G03B *21/60*

U.S. Cl. 350—128 **9 Claims**

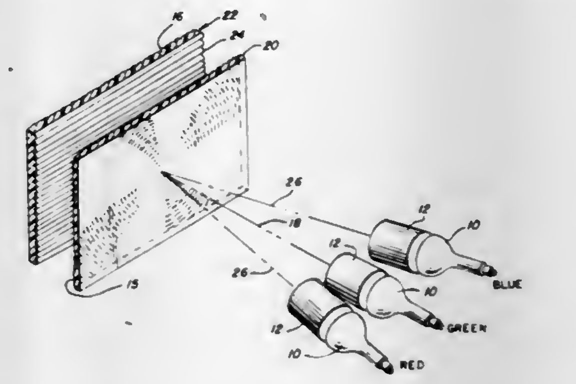

1. An image projection screen defining a normal axis, and intended for use with a plurality of image projectors including an axial image projector, the optical axis of which is substantially coplanar with said normal axis, and at least one off-axis image projector the optical axis of which is displaced from the common plane of said coplanar axes in a transverse direction; said screen having a plurality of lenticules for distributing light from said image projectors over a viewing angle range extending across said transverse direction; each of said lenticules having respective light-directing cross-sectional profiles which distribute light from said image projectors across said transverse direction in a manner which varies as a function of said viewing angle; said light distribution differing as between said axial and said off-axis image projectors; wherein a selected plurality of said lenticules are formed so that said profiles thereof are substantially proportional to a third curve which may be derived by:

(a) selecting an asymmetric first curve having an off-center peak defined by the maximum value of the coordinate of said curve in said normal direction,

(b) deriving an asymmetric second curve by selecting only a major portion of said first curve,

(c) and deriving said third curve by symmetrically joining together said second curve and its mirror image;

whereby said selected lenticules have respective distributions of light from said off-axis projector with respective maximum values which coincide with respective lines that are substantially normal to said screen at the respective locations of said selected lenticules.

4,374,610

DISH SHAPED SUBSTRATE FOR ELECTROCHROMIC DISPLAYS

Hiroshi Kuwagaki, Kyoto; Kozo Yano, Tenri, and Sadatoshi Takechi, Nara, all of Japan, assignors to Sharp Kabushiki Kaisha, Osaka, Japan

Continuation of Ser. No. 84,433, Oct. 12, 1979, abandoned, which is a continuation of Ser. No. 817,265, Jul. 20, 1977, abandoned. This application Sep. 24, 1981, Ser. No. 305,203

Claims priority, application Japan, Jul. 23, 1976, 51-88572; Sep. 3, 1976, 51-119739[U]; Jun. 13, 1977, 52-77554[U]

Int. Cl.³ G02F *1/17*

U.S. Cl. 350—357 **1 Claim**

1. An electrochromic display device comprising in combination:

a first flat substrate having a display selection electrode formed on one surface thereof;

a second dish shaped substrate with a bottom and raised

portion having a counter or reference electrode formed on the inner concave surface thereof;

said substrates being attached to each other by a conductive adhesive at the peripherally raised portion of said dish shaped substrate so as to define a cavity therebetween with the respective opposing surfaces of said electrodes forming parallel walls of said cavity, and the distance

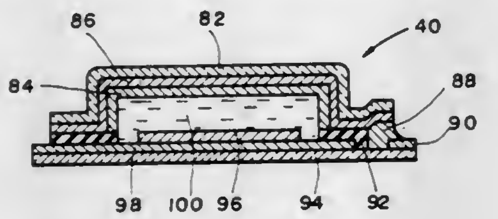

between said display electrode and counter or reference electrode being substantially defined by the depth of said dish shaped substrate at a fixed, predetermined length;

a transfer terminal provided at the periphery of said first flat substrate for connecting the electrode disposed on said dish shaped substrate to a power source via said conductive adhesive; and

a groove for introducing an electrolyte into said cavity.

4,374,611

COMPACT X-Y POSITIONING MECHANISM FOR MICROFICHE

Stephen P. Hines, Glendale, Calif., assignor to Eastman Kodak Company, Rochester, N.Y.

Filed Jun. 5, 1981, Ser. No. 270,939

Int. Cl.^{3} G03B *23/08*

U.S. Cl. 353—27 R **2 Claims**

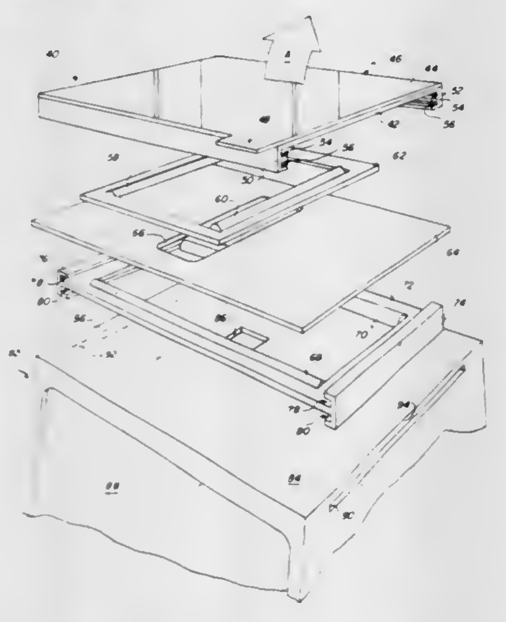

1. In a microfiche projecting apparatus, a compact X-Y positioning mechanism for microfiche, comprising:

a first bearing surface, fixed with respect to the microfiche projecting apparatus, said first bearing surface being substantially as large as the microfiche to be viewed, and having a central aperture therein for the optical path of the projecting apparatus;

first roller means, including a first pair of cylindrical rollers mounted in parallel spaced relation for rolling movement on said first bearing surface in a first direction;

second roller means, including a second pair of cylindrical rollers mounted in parallel spaced relation for rolling movement in a second direction, generally perpendicular to said first direction; an intermediate bearing plate disposed between said first and second roller means, said bearing plate having a central aperture approximately four times as large as said aperture in said first bearing surface in said first direction, and approximately the same size as said aperture in said first bearing surface in said second direction, so that upon movement of said first roller means in said first direction by a certain amount, said second roller means is moved in said first direction by twice that amount; and

microfiche carrier means for supporting a microfiche in a plane generally perpendicular to the optical axis of an optical system used to view the microfiche, said microfiche carrier means having a bearing surface and being disposed relative to said second roller means such that said bearing surface is borne by said second pair of rollers, such that upon movement of said first roller means in said first direction, said microfiche carrier means moves in concert with said second roller means, and upon movement of said second roller means in said second direction by a certain amount, said microfiche carrier means is moved in said second direction by twice that amount,

whereby a smoothly operating microfiche positioning mechanism occupying approximately the area of one microfiche but capable of translating over an area approximately four times the area of one microfiche, is provided.

4,374,612

MARK INDICATING DEVICE FOR OPTICAL APPARATUS

Susumu Matsumura, Kawasaki, and Takashi Suzuki, Yokohama, both of Japan, assignors to Canon Kabushiki Kaisha, Tokyo, Japan

Filed Jul. 13, 1981, Ser. No. 283,014

Claims priority, application Japan, Jul. 25, 1980, 55-102587; Apr. 3, 1981, 56-50751

Int. Cl.^{3} G03B *17/20, 13/02*

U.S. Cl. 354—53 **8 Claims**

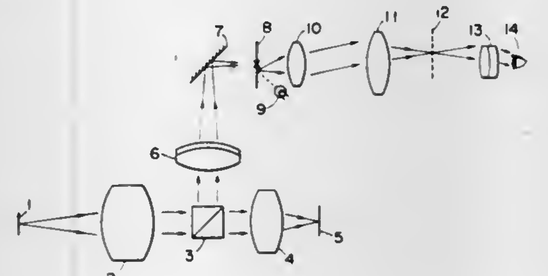

1. In an optical apparatus having objective lens means for forming an image of an object, a device for indicating a mark and view-finder means for viewing said image of object and said mark, wherein said device comprises:

a relief hologram comprising a plurality of semi-reflective oblique faces periodically arranged to form a diffraction lattice entirely embedded in a transparent body, said hologram being arranged in an optical path of said optical apparatus; and

illuminating means arranged outside said optical path to illuminate said hologram for obtaining a reconstructed image of said mark in overlapping manner with said image of object.

4,374,613

AUTO/MANUAL CAMERA EMPLOYING COMMON LENS FOCUSING DATA

John W. Stempeck, Reading, Mass., assignor to Polaroid Corporation, Cambridge, Mass.

Filed Jun. 4, 1981, Ser. No. 270,238

Int. Cl.^{3} G03B *3/10*

U.S. Cl. 354—196 **13 Claims**

1. A photographic camera operable in both automatic and manual focusing modes, said camera comprising:

a lens variable between different positions for focusing of subjects located at different subject distances on the focal plane of the camera;

ranging means for determining subject distance and for providing an electrical range signal indicative of subject distance;

sensing means for producing an electrical lens position signal indicative of each lens position;

means for comparing said range signal and said lens position signal and for automatically varying the lens to a focal position selected in accordance with said range signal;

selectively operative means for precluding said automatic variation of the lens to the range selected position when the camera is operated in the manual mode; and

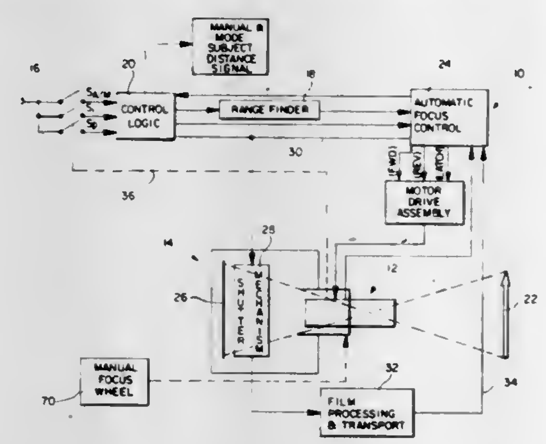

follow focus means for controlling one or more camera functions in accordance with the focal position of the lens, said follow focus means being directly responsive to said lens position signal so that said follow focus means is operative in both automatic and manual modes of operation, but determined by the automatic selection of the lens position by said ranging means in the automatic focusing mode and by the operator selection of the lens position in the manual focusing mode.

4,374,614

MECHANISM FOR LOADING FILM BACK IN OR UNLOADING SAME FROM CAMERA BODY

Takumi Kobayashi, Tokyo, Japan, assignor to Asahi Kogaku Kogyo Kabushiki Kaisha, Tokyo, Japan

Filed Oct. 29, 1981, Ser. No. 316,372

Claims priority, application Japan, Oct. 30, 1980, 55-155386[U]

Int. Cl.^{3} G03B *1/00*

U.S. Cl. 354—216 **11 Claims**

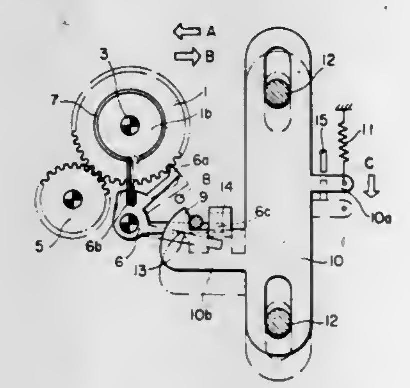

1. In a film back of the type having a film spool gear which, when said film back is inserted into a camera, will engage a winding gear in said camera, and one-way means for permitting rotation of said film spool gear in only one direction, the improvement comprising:

disabling means for disabling said one-way means only during insertion or removal of said film back to permit rotation of said film spool gear in either direction during insertion of said film back into said camera or removal of said film pack from said camera.

4,374,615

EXPOSURE CONTROL CIRCUIT FOR CAMERAS EQUIPPED WITH SELF-TIMER

Shinji Nagaoka, and Koji Satoh, both of Shikawatashi, Japan, assignors to Seiko Koki Kabushiki Kaisha, Japan

Filed Apr. 28, 1981, Ser. No. 258,526

Claims priority, application Japan, Jun. 20, 1980, 55-83581

Int. Cl.^{3} G03B *17/40*

U.S. Cl. 354—238 **7 Claims**

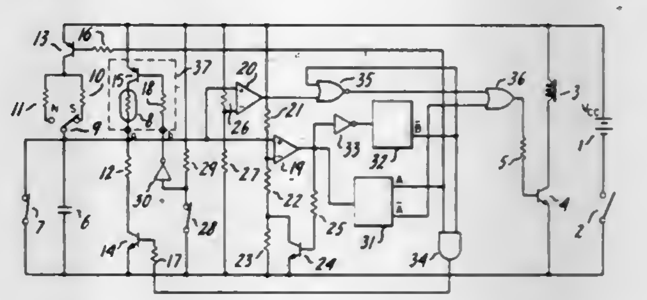

1. An exposure control circuit, for a camera, comprising:

an electrical self-timer operation control circuit for setting a self-timer operating time period by means of a time setting circuit including a resistance and a condenser; an exposure time control circuit capable of automatically determining an exposure time by means of the output of a photoelectric element and including said condenser; and means for controlling a charge on said condenser so as to function as the condenser for said self-timer operation control circuit, the condenser for setting a time period between the completion of the operation of a self-timer and the starting of the exposure operation, and as the time-setting condenser of said exposure control circuit.

4,374,616

IMAGE-FORMING APPARATUS HAVING A PHOTOSENSITIVE MEMBER TRANSFER MECHANISM

Koichi Sasaki, Higashi; Hiroshi Ishida, Ibaragi; Yasuji Sumida, Nara, and Akira Tanaka, Kyoto, all of Japan, assignors to Mita Industrial Co., Ltd., Osaka, Japan

Filed Jun. 24, 1981, Ser. No. 276,627

Claims priority, application Japan, Jun. 30, 1980, 55-91813[U]

Int. Cl.^{3} G03G *15/00*

U.S. Cl. 355—3 CH **4 Claims**

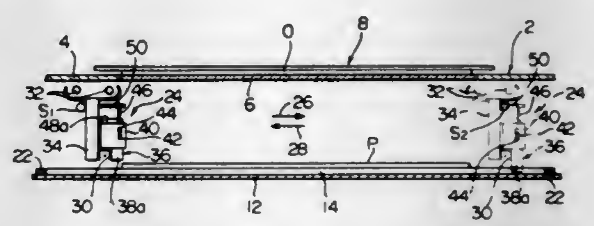

1. An image-forming apparatus comprising an original-support plate for placing an original document thereon; a photosensitive member support stand disposed opposite to, and beneath, said original-support plate for placing a photosensitive member thereon, a charging-exposing unit for forming a latent electrostatic image corresponding to the original document on the photosensitive member, said charging-exposing unit being mounted between the original-support plate and the photosensitive member support stand for transverse reciprocation, a power driving source for moving said charging-exposing unit reciprocally, and a mechanism annexed to said charging-exposing unit for transferring the photosensitive member, said mechanism being adapted to act on the photosensitive member placed on the support stand during the return movement of the charging-exposing unit to move the photosensitive incident to the return movement of the charging-exposing unit.

4,374,617

MULTI-FUNCTION DOCUMENT PROCESSOR

Tibor Fisli, Los Altos Hills, Calif., assignor to Xerox Corporation, Stamford, Conn.

Filed Aug. 5, 1981, Ser. No. 290,136

Int. Cl.³ G03G *15/28*

U.S. Cl. 355—8 **11 Claims**

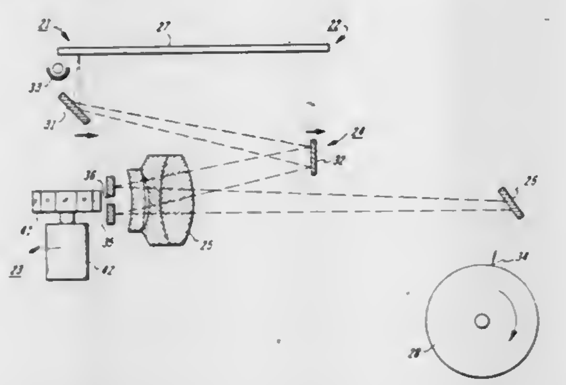

1. In a multi-function document processor for selectively performing photocopying and raster scanning, said document processor including

(a) a transparent platen for supporting a subject copy,
(b) a selectively energizeable light source for illuminating said subject copy for photocopying,
(c) another selectively energizeable light source for supplying a light beam for raster scanning, and
(d) a photosensitive recording medium, and
(e) imaging optics for photocopying and raster scanning, said imaging optics being optically aligned between said platen and said recording medium and having a predetermined optical axis;

the improvement comprising

(i) a reflective, multi-faceted rotating polygon for cyclically scanning said light beam through a predetermined scan angle during raster scanning, and
(ii) means aligned with the optical axis of said imaging optics in a tangential plane and displaced from said axis in a sagittal plane for applying said light beam to said polygon for raster scanning;
(iii) said imaging optics being selected to focus said light beam on said polygon and to refocus said light beam on said platen or on said recording medium.

4,374,618

MICROFILM CAMERA HAVING A MOVING LENS

Thomas W. Howard, Harrisburg, N.C., assignor to IBM Corporation, Armonk, N.Y.

Filed Mar. 16, 1981, Ser. No. 244,458

Int. Cl.³ G03B *27/48, 27/50*

U.S. Cl. 355—50 **7 Claims**

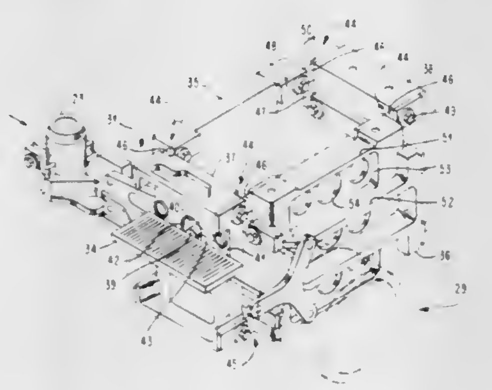

1. A camera for recording an image of moving documents onto a substantially stationary photosensitive surface wherein the image is projected onto the photosensitive surface by an optical element supported by a four-bar linkage for movement in proportional synchronism with the document to substantially arrest motion of the image with respect to the photosensitive surface, and wherein the improvement comprises:

a frame part;
said four-bar linkage having a pair of side arms and a shuttle arm connected therebetween, each of said arms being configured to have high stiffness and low mass;
hinge means interconnecting said arms and frame part, said hinge means each comprising a pair of substantially transversely oriented leaf springs which are securely clamped at each end to respective ones of said frame part and said arms.

4,374,619

VARIABLE MAGNIFICATION COPYING APPARATUS

Richard A. Spinelli, Rochester, and Edward C. Bock, Webster, both of N.Y., assignors to Xerox Corporation, Stamford, Conn.

Filed Nov. 2, 1981, Ser. No. 317,033

Int. Cl.³ G03B *27/34, 27/40, 27/70*

U.S. Cl. 355—57 **2 Claims**

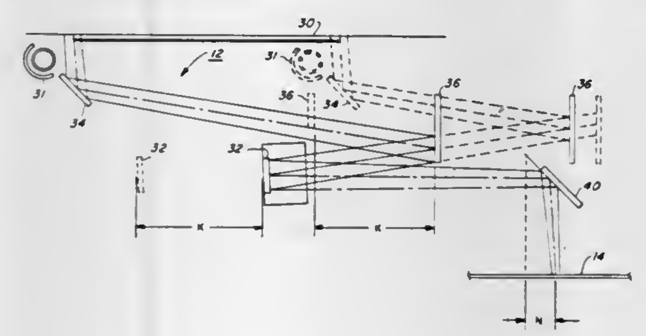

1. An optical system for use in a document reproducing apparatus wherein enlarged or reduced images of an original document lying in an object plane are exposed onto a flat imaging plane, said system including:

a first mirror adapted to scan said document in a plane parallel to said object plane,
a second mirror adapted to maintain a constant object conjugate during 1x operation but a variable object conjugate by displacement of a distance K upon selection of a magnification mode,
a lens located at a fixed location during 1x operation but displaced a distance K in a plane parallel to said object plane during a magnification mode, and
a third mirror located in the optical path between said lens and said imaging plane, said mirror displaced a second distance N and adapted to reflect reduced or enlarged images onto the imaging plane while maintaining constant image conjugate.

4,374,620

PHOTOMETRIC FLOW CELL

Alan C. Berick, Albany, and Haakon T. Magnussen, Jr., Pinole, both of Calif., assignors to Altex Scientific, Inc., Berkeley, Calif.

Filed Jan. 29, 1981, Ser. No. 229,614

Int. Cl.³ G01N *1/10*

U.S. Cl. 356—246 **13 Claims**

1. A photometric flow cell comprising:

a flow cell body having a passageway for receiving and passing fluid samples between opposite ends thereof;
optically transparent windows at said opposite ends of said passageway for passing light along an optical path through sample in said passageway;

an annular channel around one of said opposite ends of said passageway; and

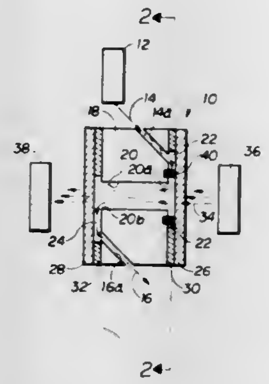

flow impedance means including a microporous annulus in said channel surrounding said one of said opposite ends for circumferentially distributing fluid flowing therethrough.

4,374,621

APPARATUS FOR CONTROLLING POWER DELIVERY TO A GRAIN STIRRING DEVICE

Larry Stille, Rockford, Iowa, assignor to David Manufacturing Company, Mason City, Iowa

Filed Oct. 28, 1981, Ser. No. 315,970

Int. Cl.³ B01F *7/24, 7/30*

U.S. Cl. 366—261 **5 Claims**

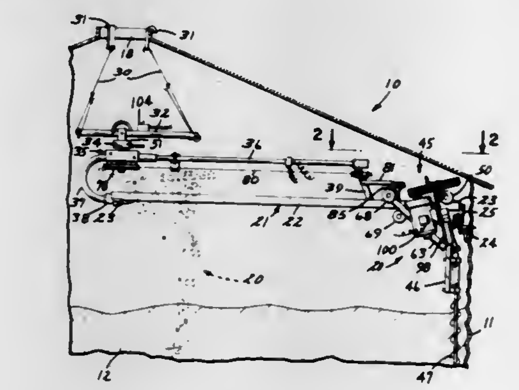

1. Apparatus for controlling delivery of power to a material-stirring device mounted in a material storage container, said material-stirring device having means for stirring said material and means for moving said stirring means about said container, said stirring means and said moving means being driven by said power, said apparatus comprising;

means for sensing movement of said moving means; and
means for interruptably connecting said power to said stirring means, said connecting means being controlled by said sensing means;
whereby when said sensing means senses absence of movement of said moving means, said connecting means interrupts power to said stirring means, thereby protecting said material from harmful overstirring.

4,374,622

DIGITAL ALARM TIMEPIECE WITH SETTING POINTER

Toshio Kashio, Tokyo, Japan, assignor to Casio Computer Co., Ltd., Tokyo, Japan

Filed Jan. 23, 1980, Ser. No. 114,569

Claims priority, application Japan, Jan. 29, 1979, 54-8892; Jan. 29, 1979, 54-8893

Int. Cl.³ G04B *23/02;* **G04C** *9/00*

U.S. Cl. 368—74 **3 Claims**

1. An electronic timepiece comprising:

current time counting means for always electronically counting current time data including data representing at least minutes and hours;
optical display means coupled to said time counting means for always displaying the current time data counted by said time counting means;
indicating means including sliding means for selectively setting one of a plurality of set times represented by a selected stop position of said sliding means;
said current time counting means counting current time data independently of the setting of said indicating means, and said display means displaying said current time data for all settings of said indicating means;
clock generating means coupled to said sliding means for detecting sliding of said sliding means and for generating clock signals responsive to the detected sliding;

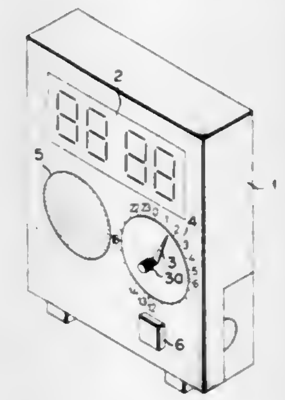

set time counting means coupled to said indicating means for obtaining set time data corresponding to the set time of said indicating means;
coincidence means coupled to said set time counting means and to said current time counting means for detecting a coincidence between said set time data and said current time data counted by said current time counting means;
sounding means coupled to said coincidence means and driven to generate a sound when said set time data is coincident with said current time data; and
operating means coupled to said set time counting means and being selectively operable for presetting set time data corresponding to a set time of said indicating means into said current time counting means as initial current time data.

4,374,623

LIGHT BEAM CLOCK

Jerome H. Simon, 17 Hubbard Ave., Cambridge, Mass. 02140

Filed May 5, 1980, Ser. No. 146,345

Int. Cl.³ G04B *19/00*

U.S. Cl. 368—79 **8 Claims**

1. A light beam clock comprising:

a clock drive motor including a first member rotatable at the speed of one revolution per hour and a second member rotatable at the speed of one-twelfth revolution per hour;
light source means;
a circumferential display portion;
a beam mechanism including a first mirror mounted with said first member for directing light from the light source means in a first radial beam to form a first spot of light representing minutes on said circumferential display portion and a second mirror mounted with said second mem-

ber for directing light from the light source means in a second radial beam to form a second spot of light repre-

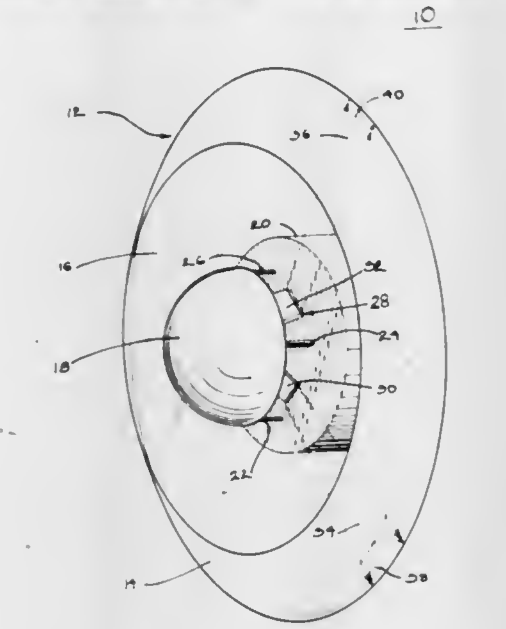

senting hours on said same circumferential display portion.

4,374,624

SOUND EMITTING DEVICE FOR ELECTRONIC TIMEPIECE

Toshio Murata, Hoya, Japan, assignor to Citizen Watch Co., Ltd., Tokyo, Japan

Filed Aug. 13, 1981, Ser. No. 292,621

Claims priority, application Japan, Sep. 8, 1980, 55-127579; Dec. 17, 1980, 55-181544

Int. Cl.³ G04C *21/00*

U.S. Cl. 368—250 **15 Claims**

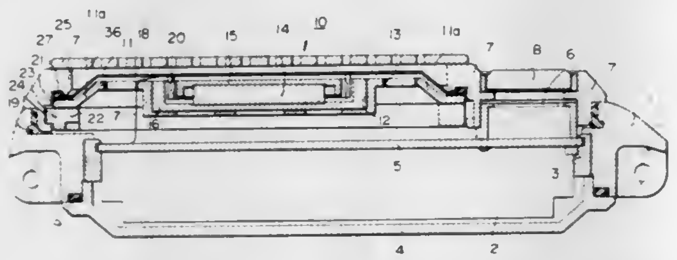

1. A sound emitting device for an electronic timepiece comprising:

a disk-shaped permanent magnet;

at least one yoke introducing magnetic flux produced by said magnet and forming, outside the periphery of said magnet, a magnetic gap having the magnetic flux in the vertical direction of the perimeter of said magnet and in the horizontal direction of the disk surfaces of said magnet;

a diaphragm carrying, within the magnetic flux of the magnetic gap, a moving coil wound at right angles to said magnetic flux and adapted to be vibrated by the electromagnetic force received from said magnetic flux in response to variations in signal currents sent from a circuit block to said coil; and

a support member supporting said permanent magnet and said yoke as well as said diaphragm at the diaphragm peripheral portion and to be secured removably at the support member peripheral portion to a timepiece case, a plurality of openings being provided in a part of said support member except where said permanent magnet, yoke and diaphragm are supported, and said support member forming an air chamber which opens to the back of the diaphragm, when the support member is packaged in the timepiece case.

4,374,625

TEXT RECORDER WITH AUTOMATIC WORD ENDING

Roy F. Hanft, and Gerald G. Pechanek, both of Lexington, Ky., assignors to IBM Corporation, Armonk, N.Y.

Filed May 1, 1980, Ser. No. 145,523

Int. Cl.³ B41J *3/02*

U.S. Cl. 400—98 **28 Claims**

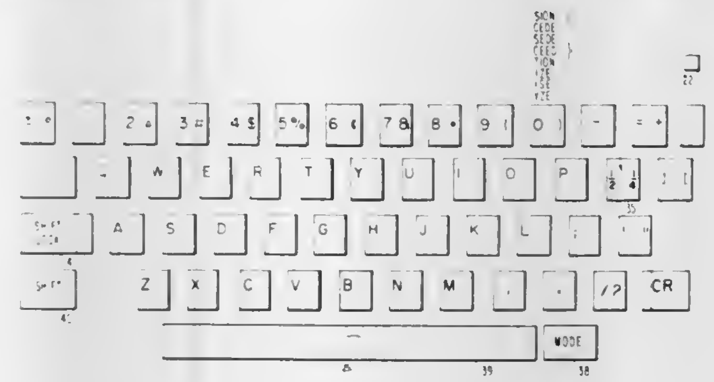

1. An automatic word ending text recorder of the kind having:

text display means to display a sequence of text characters in intelligible form in response to character and function identifying signals,

keyboard means including a plurality of alphanumeric, symbol and function keys to produce a keycode signal unique to any operator-actuated key, and

decoding means responsive to keycode signals from said keyboard means to produce said character and function identifying signals, wherein the improvement comprises:

word ending means within said decoding means producing one of at least two groups of one or more character identifying signals in response to actuation of a selected key on said keyboard, each group of character identifying signals representing a different word ending and wherein said word ending means includes means for selecting among said groups depending upon identification of one or more key actuations prior to actuation of said selected key.

4,374,626

ERASING TYPEWRITER WITH AUTOMATIC/MANUAL SELECTION

Robert W. Hooker, Lexington, Ky., assignor to IBM Corporation, Armonk, N.Y.

Continuation-in-part of Ser. No. 116,733, Jan. 30, 1980, abandoned. This application Apr. 18, 1980, Ser. No. 141,737

Int. Cl.³ B41J *29/16*

U.S. Cl. 400—697.1 **7 Claims**

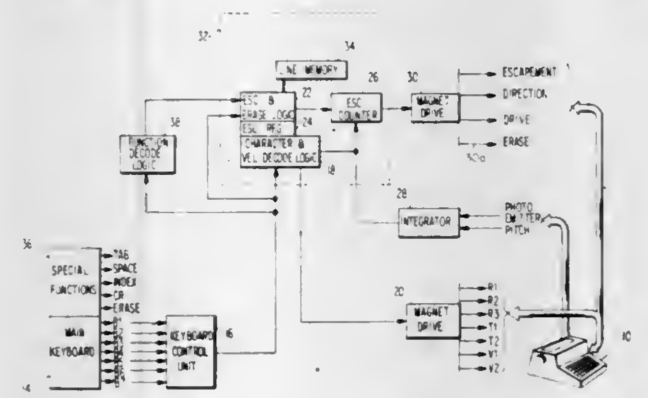

1. In an erasing typewriter including

key actuated means for generating signals representing an actuated key,

memory means for storing an ordered sequence of signals representing a sequence of operator actuated keys,

print means including print and erase media for executing a print cycle to at times print a character at a print point if said print medium is enabled, or to erase a character at a print point if said erase medium is enabled,

print point position control means responsive to said key actuated means for displacing said print means and for accessing a selected location of said memory means corresponding to said print point, and

erase means operative in response to actuation of an erase key for initiating a sequence of operations including:

(a) actuating said print point position control means to displace said print point one character space toward a left margin,

(b) accessing said memory means at a selected location corresponding to said displaced print point for reading signals stored at said selected location,

(c) actuating said print means and enabling said erase medium to execute a print cycle to erase a character at said print point corresponding to signals read from said memory means,

the improvement comprising:

first means responsive to absence of signals representing an erasable character at said selected location of said memory means to inhibit said print cycle and to enable said erase medium and said print means to execute a print cycle on a following key actuation only if said following key actuation corresponds to actuation of a key representing an erasable character.

4,374,627

BINDER FOR PERFORATED SHEETS OR THE LIKE

Michael N. Friedman, 7 Harbor Ct., Centerport, N.Y. 11721

Filed Jan. 13, 1981, Ser. No. 234,364

Int. Cl.³ B42F *13/10, 13/18*

U.S. Cl. 402—21 **21 Claims**

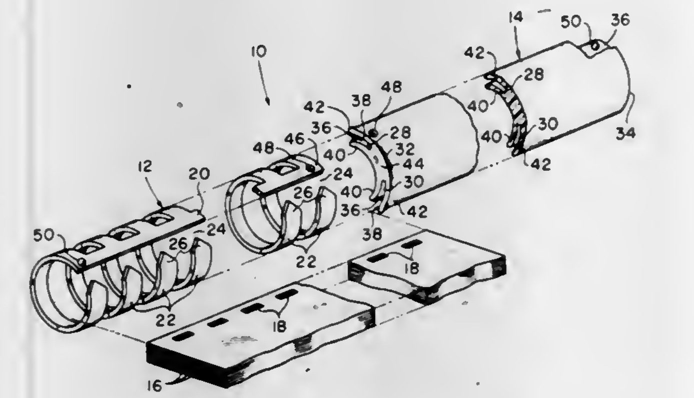

1. A binding comprising a toothed member and an engaging member relatively movable lengthwise to and from a binding position,

said toothed member having an elongated body formed unitary with a plurality of teeth extending from one side thereof,

said body and teeth being curved about its longitudinal axis so that the free ends of said plurality of teeth are spaced from an adjacent side of said body and said free ends of said teeth and body are substantially smooth and free of obstructions such that perforated sheets and the like may be moved through said space and the free unobstructed ends of said teeth may move unobstructedly through the sheet perforations for engagement with and disengagement from the perforations to bind the sheets and the like to said toothed member,

and said engaging member being elongated to substantially the length of said toothed member and having relatively spaced tracks on opposite sides of the length thereof so that each said track engages a respective one of said body and teeth for relative lengthwise sliding engaging movement to and from the binding position,

said tracks being substantially smooth and unobstructed and curved substantially coincident with their respective body and teeth to effect surface engagement therewith along said coincident substantially smooth and unobstructed curves such that when a separating force is applied to said toothed member other than in the lengthwise direction, the applied separating force causes said body and teeth to deform out of their original curvature into surface frictional engagement with the surfaces of their respective tracks to resist relative separation of said toothed member from said engaging member in the direction of the separating force.

4,374,628

JOINT FOR SECURING A SICKLE DRIVE PIN

Jerry C. Boone, and Richard L. Randall, both of Independence, Mo., assignors to Allis-Chalmers Corporation, Milwaukee, Wis.

Filed Sep. 22, 1980, Ser. No. 188,770

Int. Cl.³ F16C *11/00*

U.S. Cl. 403—162 **9 Claims**

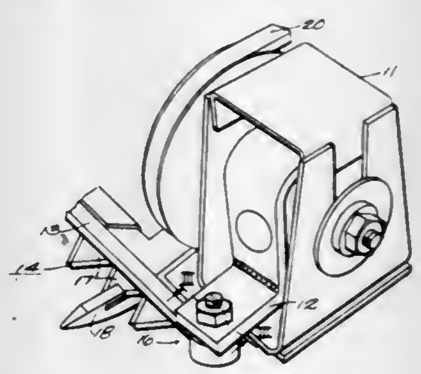

1. A joint for pivotally connecting a reciprocating sickle member to its offset driving member for transmission of force in the direction of reciprocation characterized by

a cylindrical pin having threads on at least one of its axially opposite ends, and disposed on an axis transverse to the direction of reciprocation of said sickle member,

bearing means connecting said pin to one of said members having radially inner and outer bearing elements,

wall means in said other member presenting a conical surface defining a conically shaped opening aligned with and surrounding said pin,

axially tapered wedging sleeve disposed within said opening having radially inward and outward facing surfaces in confronting relation to said pin and conical surface, respectively,

means independent of said pin and one member placing said sleeve in axial thrust transmitting relation to said inner bearing element,

a threaded fastening member in threaded engagement, respectively, with said threads on said one end of said pin and in axial thrust transmitting relation to said other member, and

axial thrust transmitting means on the other end of said pin in axial thrust transmitting engagement with said inner bearing element.

4,374,629

SYNTHETIC SEAWEED

William L. Garrett, 100 Dickinson La., West Park, Wilmington, Del. 19807

Continuation-in-part of Ser. No. 6,567, Jan. 6, 1979, Pat. No. 4,221,500. This application Aug. 18, 1980, Ser. No. 178,856

Int. Cl.³ E02B *3/04*

U.S. Cl. 405—24 **1 Claim**

1. Synthetic seaweed for underwater installation comprising an elongate anchor, a plurality of flexible strips of material having a specific gravity less than that of sea water secured to the elongate anchor extending outwardly therefrom and terminating at free end portions, each strip having a width within the range of one-quarter inch to six inches and a length within the range of two to fifteen feet, a plurality of perforations in

each of the strips whereby resistance of the strips to underwater currents is reduced, the percent open area of the perfora-

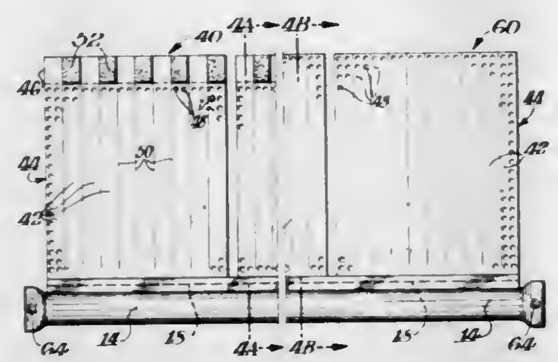

tions being approximately twenty-five to fifty percent, and tabs of buoyant material secured to the exterior of at least the free end portions of at least some of the strips.

4,374,630

ANCHOR CONNECTOR FOR TENSION LEG

Thomas A. Fraser, Jr., Ventura, Calif., assignor to Vetco Offshore, Inc., Ventura, Calif.

Filed Aug. 21, 1980, Ser. No. 180,225

Int. Cl.³ E02D *5/54*

U.S. Cl. 405—224 **3 Claims**

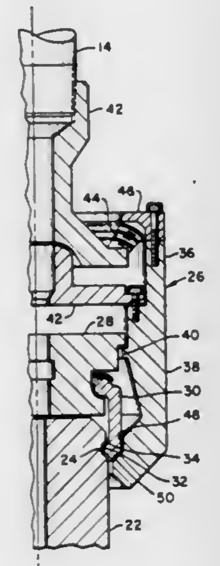

1. An anchor connector for connecting a tension leg of a tensioned leg platform to a cylindrical mandrel having a circumferential groove around the outer periphery comprising: a generally cylindrical latch segment retainer body; a plurality of latch segments pivotally supported and depending from said retainer body in an annular array, each segment having an inwardly-extending boss at its lower end sized to engage the annular groove, the upper edge of said boss sloped upwardly from the center of the annular array; a connector body having a downwardly-extending skirt surrounding said latch segments and said retainer body, and having an axial lost motion connection to said retainer body, whereby said retainer body has an upper position and a lower position with respect to the connector body; said skirt having at its lower end surface abutting the outer edge and bottom edge of the lower portion of said latch segments, when said retainer body is in its lower position, and having an internal recess above the lower end for permitting said latch segments to pivot outwardly when said retainer body is in the upper position; and means for selectively locking said retainer body to said connector body in the upper position.

4,374,631

WINDMILL SPEED LIMITING SYSTEM UTILIZING HYSTERESIS

Dale R. Barnes, Kersey, Pa., assignor to Fayette Manufacturing Corporation, Clearfield, Pa.

Filed May 21, 1981, Ser. No. 265,839

Int. Cl.³ F03D *7/04*

U.S. Cl. 416—23 **4 Claims**

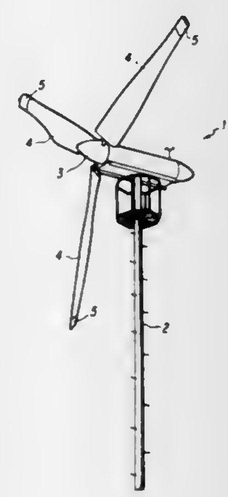

1. A speed limiting system for a windmill, comprising:
a hub mounted for rotational movement;
a plurality of blades attached to said hub, each blade including a main blade portion and a rotatable blade tip portion;
a plurality of rods for coupling respective blade tip portions to said drum;
each blade tip portion containing a cam track bushing and a cam follower and coupled to a respective one thereof for imparting rotational movement to the respective blade tip portion in relation to the respective main blade portion, said cam track pushing including at least one cam track for receiving said cam follower and allowing relative movement therein, said cam track including a first track section extending axially with respect to the respective blade and a second track section extending both axially and circumferentially with respect to the respective blade;
a drum rotatably coupled to said hub;
bias means coupling said drum and said hub for producing a force opposing relative rotation therebetween, said bias means coupled to said drum with a initial torque arm determined by the initial positioning of said cam follower in said first track section of said cam track bushing and coupled to said drum at a second torque arm less than first torque arm when said cam follower completely transverses said second cam track section;
wherein blade rotation results in a centrifugal force being applied to said drum in opposition to the force produced by said bias means, such that as blade rotation speed increases, the torque on said drum produced by the centrifugal force eventually exceeds that produced by the bias means, resulting in rotation of the drum and travel of said cam follower within said cam track, said blade tip portion correspondingly undergoing axial and then also rotational and axial movement as said cam follower traverses said cam track with increasing speed, each blade tip portion remaining rotated upon transversing said second track section until the blade rotation speed decreases to a point where the torque on the drum produced by the bias force exceeds that produced by the centrifugal force, whereby a hysterisis effect is achieved.

4,374,632

VANE CONTROL FOR A VANE MOTOR

Jack W. Wilcox, Columbus, Ohio, assignor to Abex Corporation, New York, N.Y.

Filed Feb. 2, 1981, Ser. No. 230,766

Int. Cl.³ F04C *2/356*

U.S. Cl. 418—267 **3 Claims**

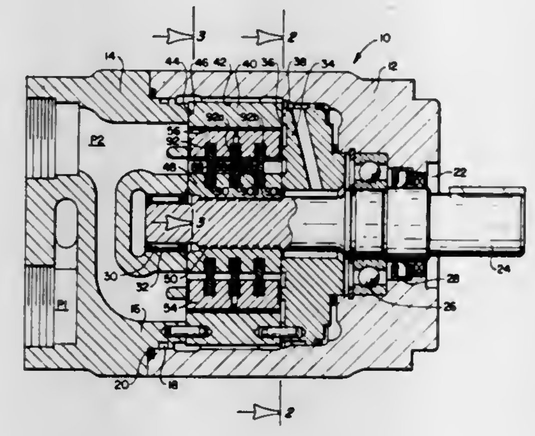

1. In a vane motor having: a rotor member; a stator member; a cam surface formed on one of the members; a plurality of vane slots formed in the other member; a vane in each slot for movement relative thereto and having a first face, a second face, an inner end, an outer end, a first side, a second side, a first sealing lip on said outer end adjacent the first face, a second sealing lip on said outer end adjacent the second face, an outer groove formed between the first and second sealing lips; a first bore connecting said inner end and said outer end; said bore opening into said outer groove, said bore having a fluid restrictor therein which causes a pressure drop when fluid flows through the restrictor; said rotor and stator members cooperating with a pair of port plates to provide a high pressure zone, a transfer zone, a low pressure zone and a sealing zone; said vanes sequentially traversing said high pressure zone, transfer zone, low pressure zone and sealing zone; the improvement comprising means for preventing pressure fluid in the outer groove from leaking down the first and second sides of the vane and means for supplying high pressure fluid to the inner end of a vane as it traverses one of the transfer or sealing zones such that when the outer end of the vane is separated from the cam surface, the high pressure fluid which is supplied to the inner end of the vane flows through the restrictor to the outer end of the vane and over the one of the first or second sealing lips which is in fluid communication with low pressure fluid such that a pressure drop is created across the restrictor which results in a force that acts to bias the vane outwardly of its slot and into contact with the cam surface.

4,374,633

APPARATUS FOR THE CONTINUOUS MANUFACTURE OF FINELY DIVIDED METALS, PARTICULARLY MAGNESIUM

Robert J. Hart, 190 Briarwood Crossing, Cedarhurst, N.Y. 11516

Filed Mar. 16, 1981, Ser. No. 244,249

Int. Cl.³ B22F *9/00*

U.S. Cl. 425—7 **7 Claims**

1. Apparatus for manufacturing magnesium powder comprising:
a chamber containing an inert gas;
a first nozzle for projecting a stream of molten magnesium into said chamber;
a second nozzle for projecting a stream of inert gas into said chamber to impinge upon and atomize the molten magnesium stream into droplets which then cool and solidify to form magnesium powder; and
means for introducing into said inert gas stream an abrasive comprising an oxide of magnesium for removing or dis-

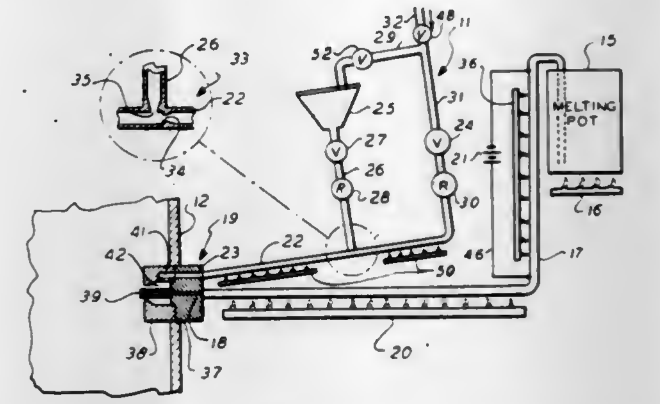

lodging build up deposits of solidified magnesium accumulated at the exit of the magnesium stream nozzle.

4,374,634

DEVICE FOR LIFTING SLIDING MOLDS ALONG STEEL BARS FOR THE CONSTRUCTION OF CONCRETE BUILDINGS AND THE LIKE

Bernhard Ahl, Am Zehnpfennigshof 13, 5000 Köln 50, Fed. Rep. of Germany

Filed Nov. 19, 1980, Ser. No. 208,379

Claims priority, application Fed. Rep. of Germany, Nov. 23, 1979, 2947210

Int. Cl.³ E04G *11/22*

U.S. Cl. 425—65 **13 Claims**

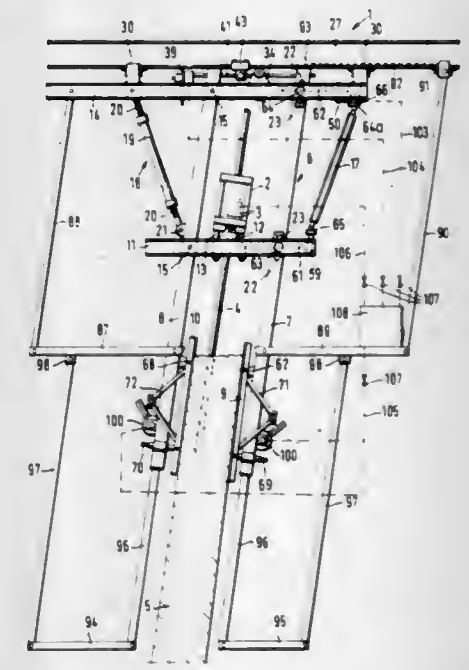

1. Apparatus for successively lifting sliding molds during construction of the wall of a concrete building or the like wherein said wall may be straight or curved and may have a variable cross-section, said apparatus comprising:
(a) a plurality of hoist means;
(b) a plurality of yoke structures, each of said yoke structures comprising a lower, substantially horizontal traverse secured to one of said hoist means, an upper substantially horizontal traverse along said hoist means, spaced substantially parallel inner and outer yoke posts extending between said lower and upper traverses whereby said lower and upper traverses and inner and outer yoke posts together form a parallelogram configuration, said yoke posts extending below said lower traverse, means pivotally connecting said inner and outer yoke posts to said lower and upper traverses at the corners of said parallelogram, and means adjustable in length and pivotally connected at one end to one of said inner and outer yoke posts and at

the opposite end to one of said lower and upper traverses at points on said one yoke post and one traverse spaced from the pivot means connecting said one yoke post to said one traverse for changing the angular relationship of said yoke posts and traverses forming said parallelogram configuration;

(c) a plurality of star beams arranged in a radial configuration above said plurality of yoke structures;

(d) means displaceably securing each of said yoke structures to one of said star beams and adjustment means to move each of said yoke structures radially along the respective star beam;

(e) an inner sliding mold of annular configuration connected to and supported by the plurality of said inner yoke posts; and

(f) an outer sliding mold of annular configuration spaced from and surrounding said inner annular sliding mold and connected to and supported by the plurality of said outer yoke posts;

(g) whereby the inclination of said inner and outer yoke posts and said inner and outer sliding molds may be adjusted by adjustment of the length of said braces, said yoke structures and inner and outer sliding molds may be moved upwardly by said hoists, and said yoke structures and inner and outer sliding molds may be moved radially by said moving means.

4,374,635
CASTING INSTALLATIONS

Alberto Carucci, Cassino, Italy, and Bernard C. Moore, Ohain, Belgium, assignors to American Standard Inc., New York, N.Y.

Filed Apr. 6, 1979, Ser. No. 27,564
Claims priority, application Italy, Apr. 17, 1978, 46840 A/78
Int. Cl.^{3} B28B *5/04, 1/26*
U.S. Cl. 425—441 **6 Claims**

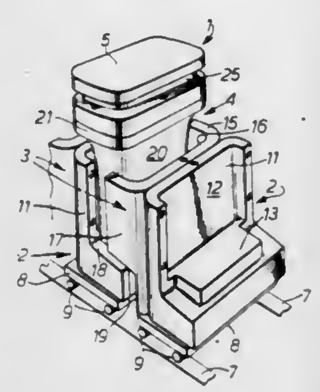

1. A mold unit for casting ceramic material in slip form, comprising a plurality of mold parts which are adapted to be assembled for a casting operation to define between them two casting cavities arranged, in the casting position of the mold unit, one above the other, into which slip can be introduced and which correspond respectively to the shapes of discrete articles, one of the mold parts having a core for shaping the article to be cast in the lower cavity of the mold unit and in its upper surface a separate cavity portion forming, with a top part of the mold unit, the upper cavity of the mold unit; said lower mold cavity being defined by two cooperating side mold members, each having a horizontal cross-section of two channel-shapes, back to back, two of said channel-shapes facing each other to form said lower cavity, and each of the remaining channel-shapes of said mold member being adapted to cooperate with adjacent mold members to form a succession of similar units, the base of each said mold unit being defined by but one of said mold members.

4,374,636
APPARATUS FOR PRODUCING CENTRALLY APERTURED RECORD DISCS

John R. Holmes, Garden Grove, Calif., assignor to Discovision Associates, Costa Mesa, Calif.

Continuation of Ser. No. 263,435, May 14, 1981, abandoned, which is a continuation of Ser. No. 31,205, Apr. 18, 1979, abandoned. This application Apr. 15, 1982, Ser. No. 368,791
Int. Cl.^{3} B29D *17/00;* **B29F** *1/06, 1/08, 1/14*
U.S. Cl. 425—589 **5 Claims**

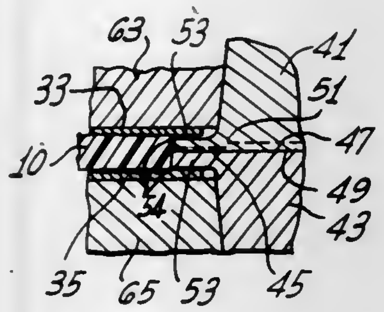

1. A molding apparatus for producing record discs, comprising:

first and second mold halves reciprocally movable with respect to each other between a closed position, wherein the parting line between the two mold halves is closed and an annular cavity is formed therebetween, and wherein a molten material can be injected into the annular cavity to form a record disc, and an open position, wherein the parting line is open and the molded record disc can be removed;

a planar, disc-shaped stamper secured to one of said first and second mold halves, said stamper defining one side of the annular cavity; and

means for limiting the reciprocal movements of said first and second mold halves, to define said closed position, said means including

a first annular ring fixedly secured to said first mold half, said first ring having an outwardly-facing abutment face, and

a second annular ring fixedly secured to said second mold half, said second ring having an outwardly-facing abutment face for abutment with the abutment face of said first ring when the apparatus is in said closed position, the inner peripheries of said first and second rings defining the perimeter of said annular cavity,

wherein the inner periphery of the annular ring for the mold half carrying said stamper is defined by an inwardly projecting annular foot that retains the outer periphery of the stamper, said annular foot being spaced from said mold half by a distance greater than the thickness of said stamper to permit the stamper to expand radially, without substantial frictional resistance, when heated by the molten material injected into the cavity,

and wherein at least one of said first and second rings includes means for venting air from the cavity whenever molten material is being injected therein.

4,374,637
BURNER CONSTRUCTION

Eugene B. Zwick, Huntington Beach; Dung D. Nguyen, Fullterton; William D. Brigham, Westminister, and Kenneth Hoffman, Fountain Valley, all of Calif., assignors to Zwick Energy Research Organization, Inc., Santa Ana, Calif.

Filed Oct. 31, 1978, Ser. No. 956,375
Int. Cl.^{3} F23M *9/00*
U.S. Cl. 431—183 **16 Claims**

1. A fuel burner comprising means forming a burner chamber of cylindrical shape and defining a burner axis therein, said chamber having an inlet opening at one end and including a peripheral cylindrical wall extending from one end to the other and displaced from said axis by a predetermined radial dimension, means forming a vortex box disposed in coupled relation to said inlet opening for introducing combustion air into said body and along said axis, said vortex box having a plurality of internal vanes arranged in a circle surrounding said axis and radially tilted thereto for imparting spiral flow to air passing through and along the axis of said burner, port means coupling said vortex box to said chamber and having a radial dimension from the axis which is less than the radial dimension of said burner wall, said coupling means and burner wall being constructed and arranged to form an expansion step for combustion air flowing therebetween so that a flow pattern through the burner is established in which combustion air is introduced through said inlet in an axial direction to produce a swirling air flow about said axis and along a generally cylindrically annular combustion zone, the combustion air moving forwardly and

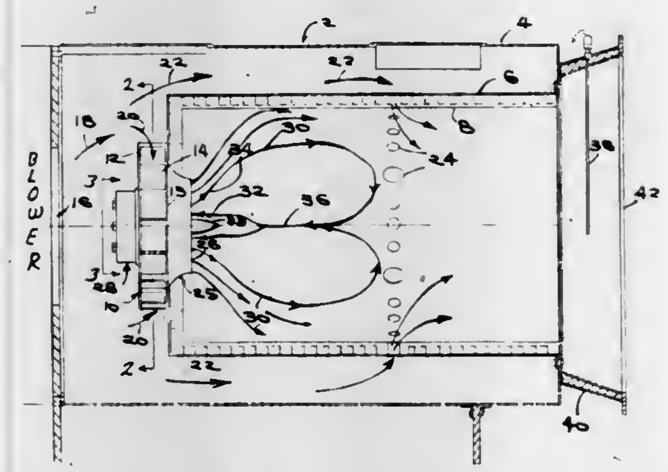

outwardly as it passes past the step and through said zone, a portion thereof recirculating by moving in a rearward direction along the axis of the burner and towards the inlet opening and vortex box to produce a secondary flow in opposition to the general flow of combustion air therethrough to thereby establish a stagnant air region at the inlet to said burner which region remains relatively constant with respect to the overall flow rate of combustion air therethrough, pilot injector means for injecting a limited quantity of liquid fuel into said stagnant region and directed along the axis of said chamber, said fuel being ignited therein to form a stable pilot flame for said burner, main fuel injector means for injecting finely divided liquid fuel generally along said burner axis and into the region of said combustion zone, said injector means being constructed and arranged to limit the injected liquid to a region bounded by a cylindrical surface surrounding said stagnant zone and extending radially therefrom to said main fuel injector means.

4,374,638
WATER SKI HANDLE AND TOW ROPE ARRANGEMENT

Dwight W. Presser, P.O. Box 5264, W. Bloomfield Twp., Oakland County, Mich. 48033

Filed Nov. 28, 1980, Ser. No. 211,271
Int. Cl.^{3} A63C *15/06*
U.S. Cl. 441—69 **8 Claims**

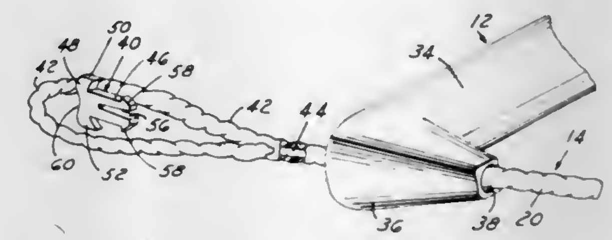

1. A ski tow arrangement for water skiing comprising an elongated handle having a handle axis, at least one opening extending through said handle transversely of said axis from a forward edge of said handle to a rearward edge and a surface pocket at said rearward edge continuously adjacent to said opening, a tow line of hollow braided construction terminating in a free end interwoven into itself to form a self-tightening closed loop extending into said opening from said forward edge to said rearward edge, and a T-shaped retainer element of flat planar construction having uniform thickness disposed within said loop and comprising a central leg portion extending into said opening and a head portion with a pair of wings coplanar with said leg portion received in said pocket externally of said opening and projecting oppositely transversely of said axis within said pocket for holding said retainer element in an orientation perpendicular to said axis and preventing removal of said loop forwardly through said opening.

4,374,639

SYSTEM FOR PREVENTING STATIC ELECTRICITY ON LAUNDERED TEXTILE MATERIALS

Barbara T. Claiborne, Hixson, Tenn., assignor to Dixie Yarns, Inc., Chattanooga

Filed Apr. 3, 1980, Ser. No. 137,474
Int. Cl.³ B08B *3/00*
U.S. Cl. 8—137 **7 Claims**

1. A method of preventing accumulation of static electricity on textile materials which have been wetted in a bath and then tumble dried, comprising: providing a laundry bath with a plurality of textile materials therein,

placing in said bath a static electricity preventing member comprising a textile substrate material reacted with a static electricity preventing material, said material comprising a compound from the group consisting of:

a N-trisubstituted ammonium-2-hydroxy-3-halopropyl compound having the general formula

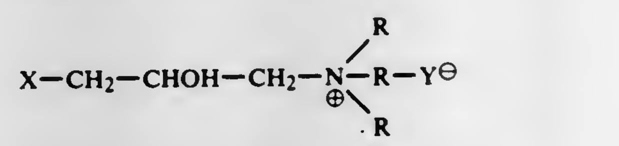

or a salt of epoxy propyl ammonium having the general formula

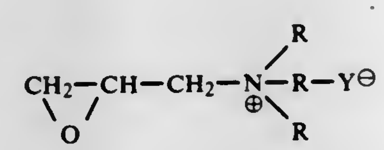

wherein X is a halogen radical, Y is chloride, bromide, sulfate or sulfonate, and the R's are methyl, ethyl, butyl or benzyl groups or an hydroxyl substituted derivative thereof,

said static preventing member being in said bath during at least the final rinse stage of a laundering procedure,

and then tumble drying said plurality of textile materials without the static preventing member, whereby said textile materials when thus dried do not exhibit static cling.

4,374,640

DYEING-STABLE MODIFICATION OF A DISPERSE DYESTUFF, PROCESSES FOR ITS PREPARATION AND USE

Horst Tappe, Dietzenbach; Hans Mayer, and Klaus Hofmann, both of Frankfurt am Main, all of Fed. Rep. of Germany, assignors to Cassella Aktiengesellschaft, Frankfurt, Fed. Rep. of Germany

Filed Mar. 29, 1982, Ser. No. 362,976
Claims priority, application Fed. Rep. of Germany, Jun. 26, 1981, 3125159
Int. Cl.³ C09B *67/48;* **D06P** *67/02*
U.S. Cl. 8—526 **10 Claims**

1. A dyestuff stable under dyeing conditions and being the β-modification of a compound of the formula I

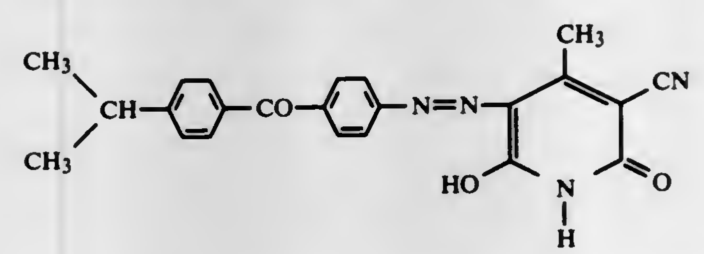

(I)

having an X-ray diffraction pattern under Cu-Kα-radiation with high intensity lines at a diffraction angle in θ degrees of 3.75, 6.40 and 12.35;

medium intensity lines at a diffraction angle in θ degrees of 6.60, 7.30, 7.60, 7.90, 8.10, 8.35, 9.30, 9.70, 9.90, 10.20, 10.50, 12.70 and 13.90;

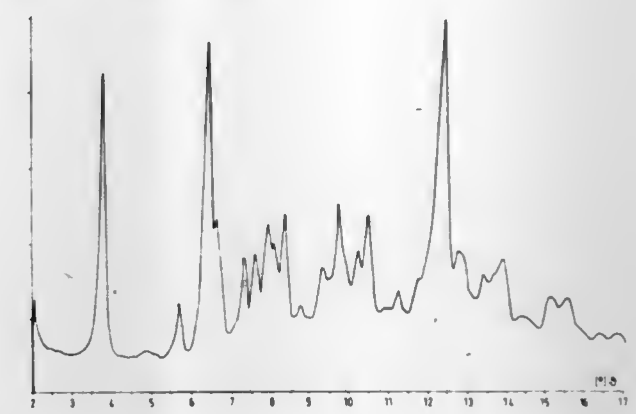

and low intensity lines at a diffraction angle in θ degrees of 5.65, 8.75, 11.25, 11.70, 13.35, 15.10 and 15.55.

4,374,641

POLYMERIC COLOR CONCENTRATES FOR THERMOPLASTIC POLYMERIC MATERIALS

Dominick A. Burlone, Anderson, S.C., assignor to Badische Corporation, Williamsburg, Va.

Continuation of Ser. No. 62,841, Aug. 1, 1979, abandoned. This application Jun. 5, 1980, Ser. No. 156,716
Int. Cl.³ D06P *3/00*
U.S. Cl. 8—557 **7 Claims**

1. A color concentrate for coloring thermoplastic polymeric materials, the concentrate comprising a blend of the following two essential components, from which blend any solvent present during processing is subsequently removed:

(A) A water- or polar organic solvent-dispersible polycondensation or addition polymer polymerized from condensable or unsaturated monomers containing functional groups capable of solubilizing or dispersing the polymer in water or in polar organic solvents, and which is capable of being:
- (1) utilized in the preparation of 1–95% solution or dispersion;
- (2) recovered from a 1–95% solution or dispersion thereof at a temperature which will not cause substantial volatilization or degradation thereof;
- (3) fused at a temperature between about 130° and 350° C.;
- (4) melted with the thermoplastic polymeric material to be colored without substantial degradation or reaction and without any visible separation therefrom on a microscopic scale; and
- (5) utilized to wet the surface of pigments by adhesion thereto; and

(B) A heat-stable, chemically-inert coloring agent selected from the group consisting of: water-soluble dyes; polar organic solvent-soluble dyes; polymer-soluble dyes; and pigments, the coloring agent causing no visible chemical reaction with the thermoplastic polymeric material to be colored or the water- or polar organic solvent-dispersible polycondensation or addition polymer.

4,374,642

DYESTUFF MIXTURES, A PROCESS FOR THEIR PREPARATION AND A PROCESS FOR DYEING HYDROPHOBIC FIBRES

Horst Brandt, Odenthal; Reinhold Hörnle, Cologne; Richard Büchele, and Dieter Wiegner, both of Odenthal, all of Fed. Rep. of Germany, assignors to Bayer Aktiengesellschaft, Leverkusen, Fed. Rep. of Germany

Filed Jun. 1, 1981, Ser. No. 268,965

Claims priority, application Fed. Rep. of Germany, Jun. 21, 1980, 3023330

Int. Cl.³ C09B *67/22*

U.S. Cl. 8—639 6 Claims

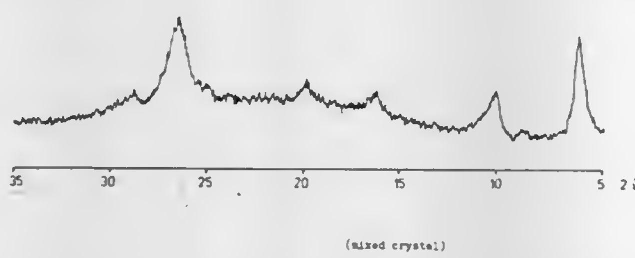

1. Dyestuff mixed crystals consisting of 75-99 percent by weight of (a) at least one dyestuff of the formula

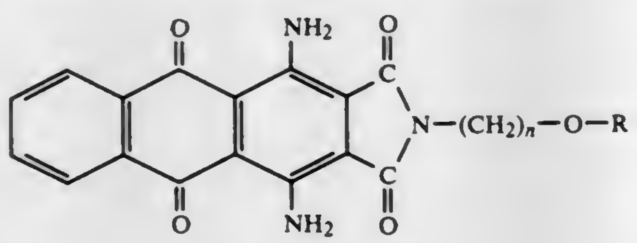
(I)

wherein

R is C_1-C_4-alkyl and

n is 2, 3 or 4,

and 1-25 percent by weight of (b) at least one dyestuff of the formula

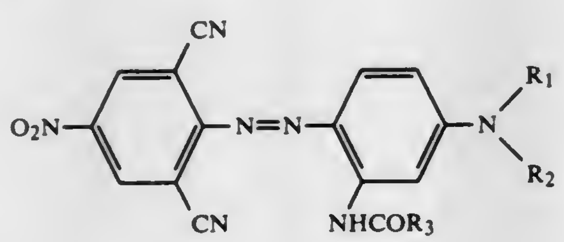
(II)

wherein

R_1 and R_2 each is C_1-C_5-alkyl and

R_3 is C_1-C_2-alkyl,

the X-ray diffraction diagram of the crystals having reflection intensities of 100, 26, 14 and 54 at the angles of incidence θ of 5.75°, 10.0°, 16.2° and 26.4°.

4,374,643

COLOR SALTS OF BASIC DYES WITH ACIDIC OPTICAL BRIGHTENERS OF STILBENE TYPE

Kazuaki Suzuki, Osaka, and Shohei Kuwabara, Suita, both of Japan, assignors to Showa Kagaku Kogyo Co., Ltd, Kawanishi, Japan

Filed Jul. 20, 1981, Ser. No. 284,532

Claims priority, application Japan, Jul. 22, 1980, 55-99345

Int. Cl.³ C09B *23/14;* D06P *1/41*

U.S. Cl. 8—648 6 Claims

1. A color salt consisting of a stilbene type optical brightener component having at least one anionic group and a color component having at least one basic group capable of forming a salt with the anionic group.

4,374,644

BLOOD CELL VOLUME MONITORING

Douglas Armstrong, Coral Springs, Fla., assignor to Coulter Electronics, Inc., Hialeah, Fla.

Filed Apr. 6, 1981, Ser. No. 251,668

Int. Cl.³ G01N *27/04, 33/50*

U.S. Cl. 436—63 13 Claims

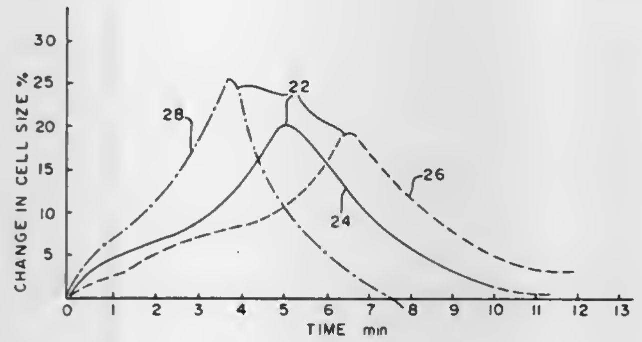

1. A method of testing cells comprising the steps of:

forming a mixture of at least one portion of a cell sample with a cell volume increasing solution having a predetermined, substantially unchanging composition, the cells of said cell sample each having an original volume;

causing the cells to reside in said mixture for at least a predetermined duration during which the cells attain a change increase in their volume as compared to their original volume, the amount of said change depending upon the time of immersion of the cells in said cell volume increasing solution and the innate and acquired properties of each cell;

measuring the change of volume of the cells as a function of time; and

employing said measured differences in cell volume to define data which is capable of being compared with cell volume data representative of a known health or physiological condition.

4,374,645

PROCESS FOR GRANULATION OF SLAG

Guido Monteyne, Lembeke, Belgium, assignor to Paul Wurth S.A., Luxembourg

Filed May 28, 1981, Ser. No. 267,880

Claims priority, application Luxembourg, Jul. 4, 1980, 82585

Int. Cl.³ B01J *2/02*

U.S. Cl. 23—293 A 11 Claims

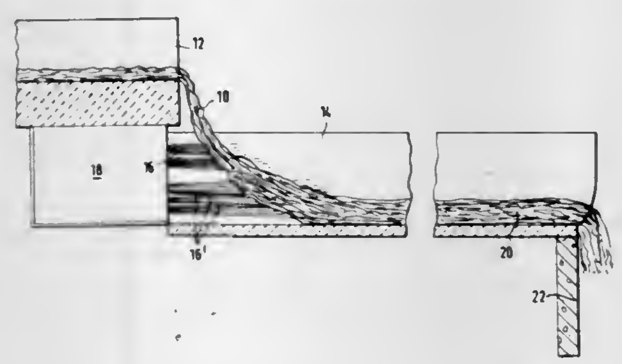

1. In a process for the granulation of molten slag, the molten slag being wet by a stream of liquid to cause solidification of the molten slag in the form of granules which are transported by the stream, the improvement comprising:

establishing a stream of liquid having at least first and second liquid current components of different pressures and temperatures commensurate with different functions to be performed, the pressure and temperature of said first current component being higher than the pressure and temperature of said second current component;

causing a flow of molten slag to be intercepted and wet by said first liquid current component at the higher temperature and higher pressure of said first liquid current component, said first liquid current component primarily serving to effect the granulation of said molten slag; and

entraining the granulated slag in said second liquid current component, said second liquid current component being at the lower temperature and pressure of said second liquid current component, to transport the slag to a desired destination;

the temperature and pressure of said first liquid current component being commensurate with requirements for granulation of the slag and the temperature and pressure of said second liquid current component being commensurate with requirements for transporting the slag.

4,374,646

PROCESS OF MAKING AN IMPROVED COMBUSTIBLE GEL AND PRODUCT

Edward O. Hayes, Mesa, Ariz., assignor to National Research Development, Inc., Scottsdale, Ariz.

Filed Apr. 30, 1980, Ser. No. 145,305

Int. Cl.³ C10L *7/00*

U.S. Cl. 44—7 D 4 Claims

1. A process for making a combustible gel comprising soaking calcium carbide in a lower alkylene glycol which contains a small amount of water in a closed space in amounts sufficient and for a time sufficient to produce the gel.

2. A process according to claim 1 in which the glycol is ethylene glycol.

4. A combustible gel produced by the process of claim 1 or 2.

4,374,647

OXYGENATED FUEL DEHYDRATION

Susan A. Bezman, Point Richmond, Calif., assignor to Chevron Research Company, San Francisco, Calif.

Filed Jun. 25, 1981, Ser. No. 277,294

Int. Cl.³ C10L *1/22*

U.S. Cl. 44—56 6 Claims

1. A method for dehydrating a fuel composition which comprises at least one gasoline blending hydrocarbon component, isopropanol and water, the method comprising contacting the fuel composition with a saponified starch-g-polyacrylonitrile polymer, wherein the weight ratio of fuel consumption to polymer is from about 2:1 to 100:1.

4,374,648

MOTOR FUEL COMPOSITION

W. Alan Sweeney, Larkspur, Calif., assignor to Chevron Research Company, San Francisco, Calif.

Continuation-in-part of Ser. No. 155,044, May 30, 1980, Pat. No. 4,302,214. This application Aug. 10, 1981, Ser. No. 291,691

The portion of the term of this patent subsequent to Nov. 24, 1998, has been disclaimed.

Int. Cl.³ C10L *1/18*

U.S. Cl. 44—56 6 Claims

1. A gasoline major fuel comprising a major portion of gasoline-boiling-range compounds and from 0.1 to 49 volume percent di-(t-butoxy)methane.

4,374,649

FLAME ARRESTOR

Subbarao N. Rao, Ridgewood, N.J., assignor to Burns & Roe, Inc., Oradell, N.J.

Filed Feb. 12, 1981, Ser. No. 233,769

Int. Cl.³ F17D *3/00;* B01F *3/04*

U.S. Cl. 48—192 4 Claims

1. A flash arrestor comprising:

a drum containing a perdetermined quantity of fluid;

a closure means at each end of the drum for closing the same;

conduit means disposed within said drum and extending through one of said closure means;

bubbler means associated with the upper region of said conduit means at a level below the fluid level in said drum;

wherein the longitudinal axes of said drum and said conduit means are parallel and horizontal, said conduit means extending substantially the full length of said drum and said bubbler means includes a nipple having an aperture for effecting fluid flow communication between the inte-

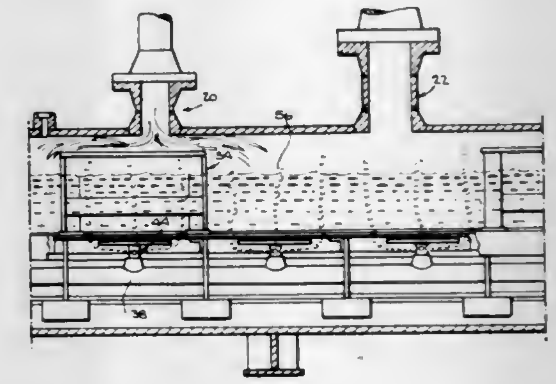

rior of said conduit means and said drum below the fluid level thereof and a solid baffle plate horizontally disposed above said nipple and below the fluid level, arranged to disperse said bubbles horizontally beneath the fluid level in said drum, and a perforated plate is disposed within said drum below the fluid level and above said solid baffle plate; and Outlet means in said drum above the fluid level therein wherein flash distribution means are provided between said outlet means and the fluid level in said drum.

4,374,650

BI-FLOW ROTARY KILN COAL GASIFICATION PROCESS

Peter G. Garside, Waukesha, Wis., assignor to Allis-Chalmers Corporation, Milwaukee, Wis.

Filed May 18, 1981, Ser. No. 264,479

Int. Cl.³ C10J *3/06*

U.S. Cl. 48—202 8 Claims

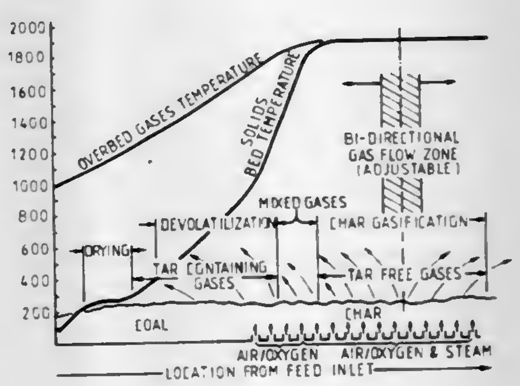

1. A dry process for continuously gasifying unsized particles of coal which upon being progressively heated to a final temperature of approximately 2,000° F. through heat treatment stages in which the coal gives off a combustible mixture of gases containing water vapor, hydrogen, carbon monoxide, carbon dioxide, hydrocarbon vapors (tar-laden) and smoke (aerosols) and hydrocarbon-free gases (tar-free) at 1,600°-2,000° F. in a final and highest temperature stage of said series of stages, with said treatment stages each being achieved in zone within a rotary kiln inclined downwardly from a material inlet toward a material outlet, the process comprising the steps of:

(a) feeding a continuous supply of said coal to the inlet to form a bed of the coal in the kiln, and rotating the kiln to advance the bed from the inlet to the outlet of the kiln;

(b) increasing the temperature of the bed progressively as the coal is advanced through said heat treatment stages to increase the temperature of the coal in the final stage to approximately 2,000° F. and the temperature of the hydrocarbon-free gases liberated in the final stage to approximately 1,900° F.;
(c) admitting air and steam through the kiln shell and bed of coal where the coal is heated to at least a tar-free gasification temperature and at locations in a plurality of radial planes spaced apart along the central axis of the kiln;
(d) selectively controlling the discharge of a proportion of the process gas from each end of the kiln to split into two streams the tar-free gas produced by air and steam passing through the coal and draw the split tar-free gas streams apart to flow in axially opposite directions within the kiln with one of the tar-free gas streams flowing axially away from the zone in which tar-laden gases emerge from coal heated to devolatilization temperature and toward the material outlet of the kiln for discharge from the kiln as tar-free gas, and with the tar-free gas stream flowing toward the material inlet of the kiln mixing with said emerging tar-laden gases to flush tar-laden gases out the material inlet end of the kiln and away from the stream of tar-free gases flowing toward and out the material outlet end of the kiln; and
(e) adjusting the proportion of process gases discharged out each end of the kiln to move the location of the tar-free gas flow split along the central axis of the kiln to a position between the beginning of said tar-free gasification stage and the material outlet end of the kiln with said position of the split selected to maintain a maximum attainable flow of tar-free gas out the material discharge end of the kiln while maintaining the temperature of the mixed gases flowing out the material feed end of the kiln at above tar condensing temperature.

4,374,651
COMPOSITE OF METAL-BONDED CUBIC BORON NITRIDE AND A SUBSTRATE AND PROCESS OF PREPARATION
Minyoung Lee, Schenectady, and Lawrence E. Szala, Scotia, both of N.Y., assignors to General Electric Company, Schenectady, N.Y.
Filed Sep. 28, 1981, Ser. No. 305,865
Int. Cl.[3] B24D *3/02*
U.S. Cl. 51—309 21 Claims

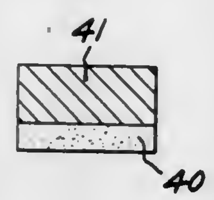

1. In a process for cementing a quantity of cubic boron nitride particles together and bonding the cemented cubic boron nitride particles to a substrate to form a composite abrasive article wherein an assembly comprising a volume of said cubic boron nitride particles, substrate precursor material, an aluminum atom-yielding medium and containment means therefor is provided in a stabilized geometry and said assembly of stabilized geometry is hot-pressed by the simultaneous application thereto of heat and pressure, said hot-pressing being at a temperature substantially in excess of the melting point of said aluminum atom-yielding medium and at a pressure sufficiently high to cause molten aluminum atom-yielding medium to infiltrate the interstices between said cubic boron nitride particles, the improvement comprising:
(a) deriving said substrate and the aluminum atom-yielding medium for said cubic boron nitride particles from a single multi-component source, said multi-component source comprising a mixture of ceramic particles and particles of said aluminum atom-yielding medium, the latter being present in a quantity between about 30 and 60 percent of the volume of the completed composite abrasive article.

4,374,652
FILTER APPARATUS AND METHOD FOR COLLECTING FLY ASH AND FINE DUST
Karim Zahedi, Brookline, and Jeffrey C. Alexander, Reading, both of Mass., assignors to EFB Inc., Woburn, Mass.
Division of Ser. No. 69,046, Aug. 23, 1979, Pat. No. 4,308,036. This application Aug. 20, 1981, Ser. No. 294,525
The portion of the term of this patent subsequent to Dec. 29, 1998, has been disclaimed.
Int. Cl.[3] B03C *3/00*
U.S. Cl. 55—6 8 Claims

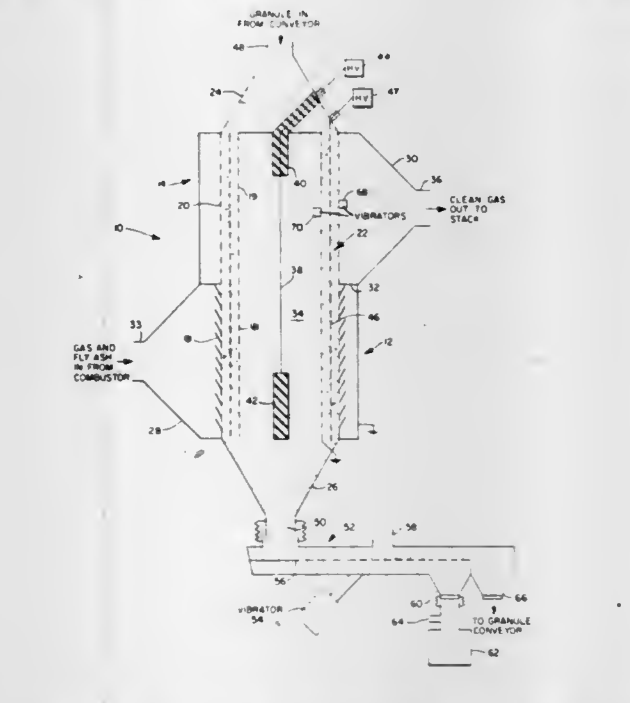

8. A method of removing particulate from a gas stream comprising providing a first filter having a tubular granular bed, providing a second filter having a tubular granular bed, the second filter being located above the first filter with the beds aligned, passing a gas stream containing particulate inwardly through the first filter and then outwardly through the second filter, moving the particulate in series through the second filter and then through the first filter, electrifying the granules in the second filter for the collection of particulate, and, interiorly of the first filter, electrically charging particulate in the gas stream before it passes through the second filter.

4,374,653
PROCESS CONTROL
Anne D. Freye, Amsterdam, and Johan A. van Arkel, The Hague, both of Netherlands, assignors to Shell Oil Company, Houston, Tex.
Continuation of Ser. No. 739,169, Nov. 5, 1976, abandoned. This application Mar. 27, 1978, Ser. No. 890,356
Int. Cl.[3] B01D *53/14*
U.S. Cl. 55—18 3 Claims

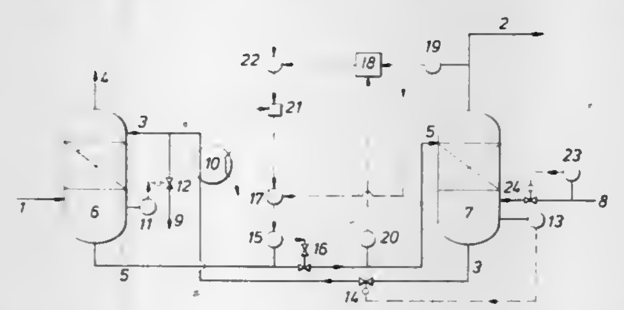

1. In a process for the removal and treatment of SO_2 from a gas stream containing SO_2, wherein the gas stream is contacted in an absorption zone with a liquid absorbent that is selective for SO_2 to produce a SO_2-containing absorbent and a purified gas stream; the SO_2-containing absorbent is passed to a stripping zone and stripped to produce a regenerated absorbent and an SO_2-containing gas flow; and the regenerated absorbent is returned to the absorption zone, the improvement comprising, uniformizing the amount of SO_2 in the SO_2 gas flow by adjusting the flow of the SO_2-containing absorbent to the stripping zone in response to the output signal from a flow controller which compares the measured value of the rate of the SO_2-containing gas flow with a set value, the set value in turn being the output signal from an SO_2-concentration controller which compares a signal corresponding to the SO_2-concentration in the SO_2-containing absorbent with a set value for that concentration.

4,374,654
ABSORPTIVE SEPARATION OF HCL AND H_2S FROM CATALYTIC REFORMER OFFGAS
Charles S. McCoy, Orinda, Calif., assignor to Chevron Research Company, San Francisco, Calif.
Filed Aug. 3, 1981, Ser. No. 289,172
Int. Cl.[3] B01D *53/04*
U.S. Cl. 55—71 6 Claims

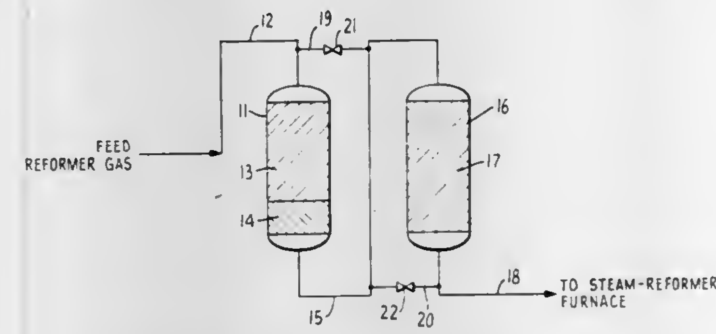

1. A substantially continuous adsorptive separation process for removing HCl and H_2S from a catalytic reforming offgas that contains less than about 10 ppm each of HCl and H_2S to make the offgas useful as a feedgas for a steam reforming process comprising:
(a) passing the offgas at a temperature in the range of about 40° C. to 70° C. through a molecular sieve or activated alumina bed that adsorbs HCl selectively from the offgas, and
(b) thereafter passing the HCl-depleted offgas at said temperature through a zinc oxide bed that adsorbs H_2S from the offgas, whereby HCl and H_2S are removed from the offgas to an extent that the HCl and H_2S contents of the offgas leaving the beds are below that which would significantly poison a steam reforming catalyst.

6. A substantially continuous adsorptive separation process for removing HCl and H_2S from a catalytic reforming offgas that contains less than about 10 ppm each of HCl and H_2S to make the offgas useful as a feedgas for a steam reforming process comprising:
(a) passing the offgas at a temperature in the range of about 40° C. to 70° C. through an activated alumina bed that adsorbs HCl selectively from the offgas, and
(b) thereafter passing the HCl-depleted offgas at said temperature through a zinc oxide bed that adsorbs H_2S from the offgas, whereby HCl and H_2S are removed from the offgas to an extent that the HCl and H_2S contents of the offgas leaving the beds are below that which would significantly poison a steam reforming catalyst.

4,374,655
HUMIDITY CONTROLLER
Philomena Grodzka, Huntsville; Paul O. McCormick, Athens, and James W. Fletcher, Huntsville, all of Ala., assignors to Lockheed Missiles & Space Company, Inc., Sunnyvale, Calif.
Filed Dec. 7, 1981, Ser. No. 327,895
Int. Cl.[3] B01D *53/04*
U.S. Cl. 55—163 16 Claims

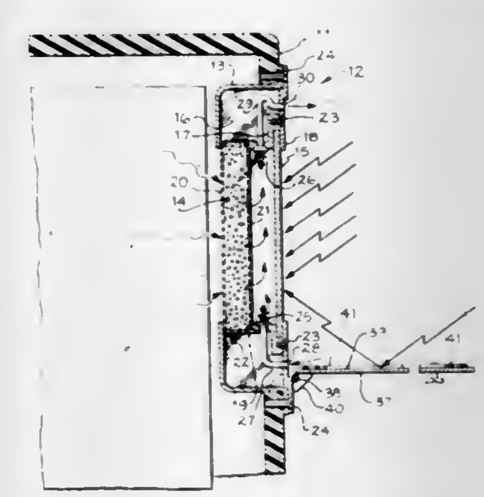

1. A humidity controller for installation in an apertured portion of a wall of a storage container, said humidity controller comprising:
(a) a frame assembly insertable into said apertured portion of said wall, said frame assembly being securable to said wall;
(b) a bed of solid desiccant material for removing moisture from said container, said bed of desiccant material being positioned by said frame assembly inside said container when said frame assembly is inserted into said apertured portion of said wall;
(c) a cover that is substantially transparent to solar energy, said transparent cover being positioned by said frame assembly apart from said bed of desiccant material and overlying said apertured portion of said wall when said frame assembly is inserted into said apertured portion of said wall, a passageway thereby being formed between said transparent cover and said bed of desiccant material, air in said passageway and a surface portion of said bed of desiccant material exposed to said air in said passageway being heated by solar energy transmitted through said transparent cover, heating of said surface portion of said bed of desiccant material causing moisture to pass from said bed of desiccant material into said passageway, said heated air in said passageway thereby becoming moisture-laden; and
(d) valve means attached to said frame assembly for enabling removal of said moisture-laden heated air from said passageway by convection.

4,374,656
APPARATUS FOR SOLVENT DEGASSING AND SOLVENT SUPPLY IN LIQUID CHROMATOGRAPHS
Helge Schrenker, Karlsruhe, and Peter Hupe, Baden-Baden, both of Fed. Rep. of Germany, assignors to Hewlett-Packard GmbH, Boeblingen, Fed. Rep. of Germany
Filed Jun. 24, 1981, Ser. No. 276,848
Claims priority, application Fed. Rep. of Germany, Jun. 23, 1980, 3023383
Int. Cl.[3] B01D *15/08*
U.S. Cl. 55—170 5 Claims

1. An apparatus for solvent degassing and solvent supply in a liquid chromatograph comprising:
at least one solvent storage vessel partly filled with liquid solvent, the remaining volume in said vessel forming a vapor volume;

means connecting a helium source to said vapor volume for avoiding re-absorption of air by the solvent;
a vacuum pump connected to said vapor volume via a suction line;

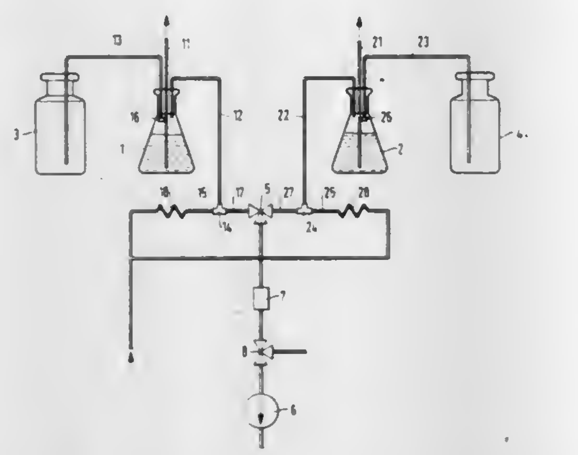

a solvent source connected to said vapor volume via a supply line; and
a pore filter terminating the supply line for said solvent source within said vapor volume.

4,374,657
PROCESS OF SEPARATING ACID GASES FROM HYDROCARBONS
Ronald L. Schendel, Hermosa Beach, and Frederic T. Selleck, Whittier, both of Calif., assignors to Fluor Corporation, Irvine, Calif.
Filed Jun. 3, 1981, Ser. No. 270,016
Int. Cl.^{3} B01D *59/12*
U.S. Cl. 62—19 **16 Claims**

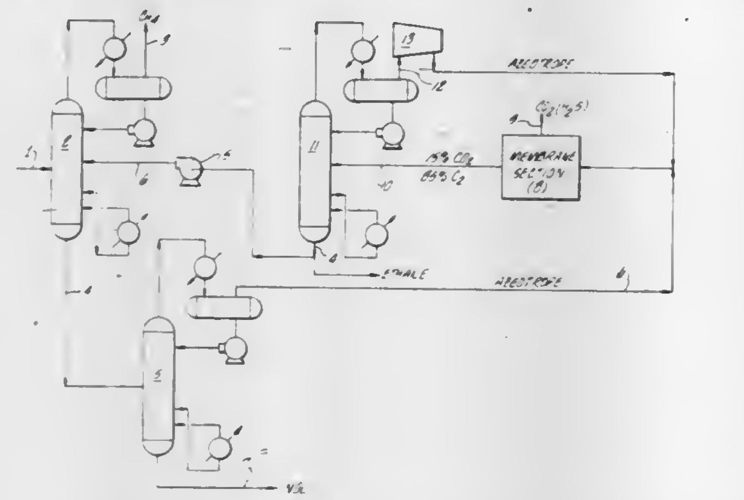

1. A process of separating acid gases from hydrocarbons comprising separating methane from a hydrocarbon stream containing acid gases to produce a hydrocarbon stream substantially free from methane, and subsequently passing said substantially methane free hydrocarbon stream through a semipermeable membrane system to separate said acid gases from said hydrocarbon components, said acid gases passing through said membrane system at a substantially greater permeation rate than said hydrocarbon components.

15. A process of separating acid gases from hydrocarbons comprising subjecting a hydrocarbon stream containing carbon dioxide and/or hydrogen sulfide to low temperature distillation to produce a hydrocarbon stream substantially free from methane, and subsequently passing said substantially methane-free stream through a semi-permeable membrane system to separate said acid gases from said hydrocarbon components and to produce a hydrocarbon rich stream, said acid gases passing through said membrane system at a substantially greater permeation rate than said hydrocarbon components.

4,374,658
DEVICE FOR PRODUCING A BLOCK OF SOLIDIFIED CARBON DIOXIDE
Yoshihisa Kawaguchi, 229-1-7, Akasaka 9-Chome, Minatoku, Tokyo, Japan
Continuation of Ser. No. 173,353, Jul. 29, 1980, abandoned. This application Nov. 19, 1981, Ser. No. 323,085
Claims priority, application Japan, Jul. 31, 1979, 54/104886[U]
Int. Cl.^{3} B29C *3/00*
U.S. Cl. 62—35 **20 Claims**

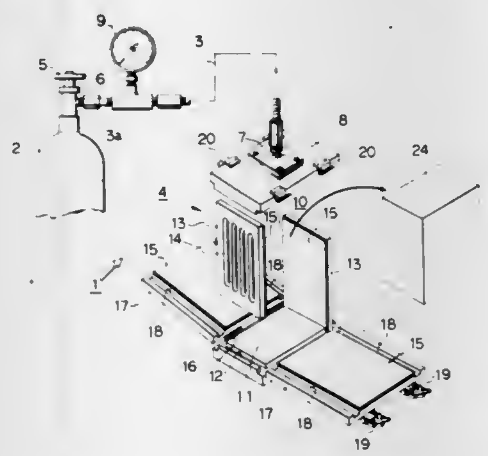

1. A device for producing a block of solidified carbon dioxide essentially comprising, in combination:
a high pressure vessel in which liquified carbon dioxide is contained,
a thermally insulated high pressure feed tube, and
a molding box comprising a single molding chamber in which the required product of solidified carbon dioxide is molded in the form of block,
one end of said high pressure feed tube being connected to said high pressure vessel via valve means comprising a stop valve and pressure reducing valve while the other end thereof being connected to said molding box via a nozzel means,
wherein said molding box is constructed in a cubic structure of square or rectangular configuration and essentially comprises a top cover having said nozzle means secured thereto, a pair of first side walls oppositely located in a fact-to-face relationship and a base board, each of said members being formed to define a square or rectangle and adapted to be connected to or disconnected from any one of the adjacent members,
said first and/or second side walls being formed with a plurality of openings through which gaseous carbon dioxide flows out and further being provided with a layer of filter material having a predetermined mesh size which filter material is fixedly secured to the inner wall thereof, respectively.

4,374,659
MULTIPLE GOB SHEARING APPARATUS
Donald G. Davey, Oregon, Ohio, assignor to Owens-Illinois, Inc., Toledo, Ohio
Filed Dec. 23, 1981, Ser. No. 333,831
Int. Cl.^{3} C03B *5/38*
U.S. Cl. 65—334 **3 Claims**

1. Apparatus for shearing four or more streams of molten glass into gobs simultaneously comprising a motor driven cam, a lever pivoted at one end to a fixed support and with its other end movable, a cam follower carried by said lever intermediate its ends, a connecting rod connected to said movable end of said lever, a first bellcrank;
means connecting said rod to said first bellcrank, a pair of output crank arms connected to said first bellcrank, a second bellcrank, linkage means connecting said second bellcrank to the output of the first bellcrank, a third bellcrank, linkage means connecting said third bellcrank to the other output of the first bellcrank, a first and second pair of shear blade carrying arms, each said pairs of arms being mounted for equal and opposite simultaneous movements about adjacent pivot axes, two or more shear blades carried at the ends of said arms opposite the pivot axis, a molten glass feeder having four or more downwardly extending orifices for discharging four or more streams of glass simultaneously, each pair of shear arms being pivoted between a position where its blades overlap on the

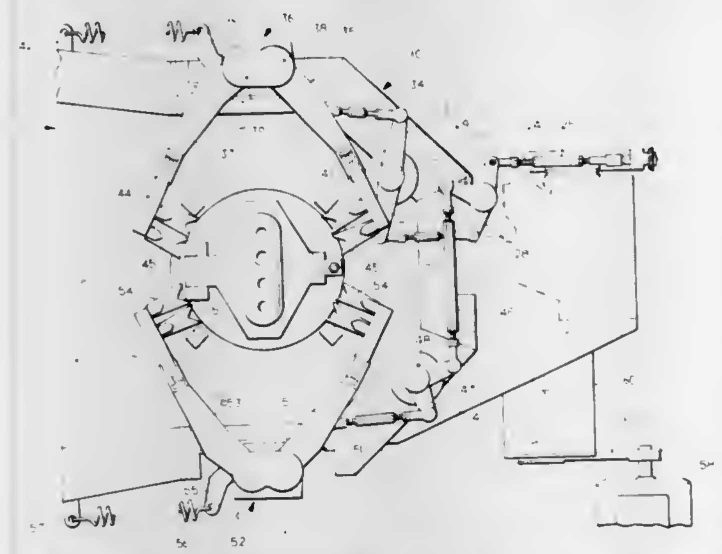

axis of two or more streams and the other pair of shear arms having its blades pivoted to overlap on the axis of the other two or more streams of glass, and linkage means from said second bellcrank to one arm of said pair of shear arms for operating said pair of shear arms to sever said streams into gobs, and linkage means from said third bellcrank to one of said other pair of shear arms for actuating said other pair of shear arms at precisely the same moment as the operation of the other shear arms whereby four or more streams of glass are simultaneously severed into gobs.

4,374,660
FLUIDIZED BED GLASS BATCH PREHEATER
Ravinder K. Sakhuja, Lexington; William E. Cole, Sudbury, and Dimitris Pavlakis, Cambridge, all of Mass., assignors to Thermo Electron Corporation, Waltham, Mass.
Filed Aug. 18, 1981, Ser. No. 293,913
Int. Cl.^{3} C03D *3/00*
U.S. Cl. 65—335 **7 Claims**

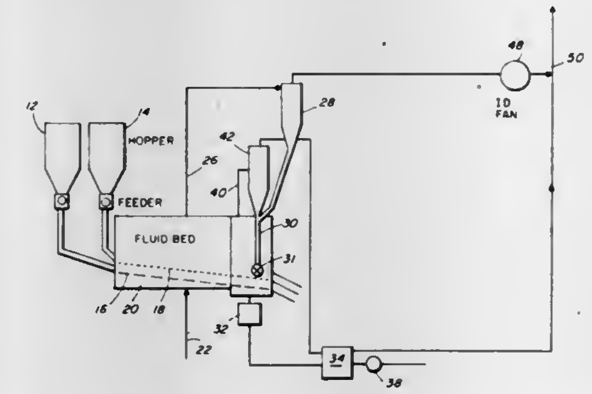

3. A glass batch preheater for operation in conjunction with a glass melting furnace having a regenerator comprising:
a preheater stage;
a relatively fine, inclined grate disposed within, and running the length of, said preheater stage;
means for supplying glass batch material to said preheater stage near the high end of said grate to form a shallow bed upon said relatively fine grate;
a relatively coarse, inclined grate disposed beneath and spaced from said first grate;
means for supplying exhaust gases from said regenerator upwardly through said bed of cullet upon said relatively coarse grate;
means for supplying cullet to said preheater stage near the high end of said relatively coarse grate to form a shallow bed of cullet upon said relatively coarse grate;
outlet means for removing glass batch material and cullet from said preheater stage; and
means for directing exhaust gases from said regenerator upwardly through said bed of cullet to heat said bed of cullet and trap particles entrained in said exhaust gases and upwardly through said bed of glass batch material to fluidize and heat said glass batch material.

4,374,661
GROWTH REGULATION PROCESS
Charles D. Fritz, Philadelphia; Wilbur F. Evans, Springhouse, and Anson R. Cooke, Horsham, all of Pa., assignors to Union Carbide Corporation, Danbury, Conn.
Continuation-in-part of Ser. No. 693,698, Dec. 27, 1967, abandoned, which is a continuation-in-part of Ser. No. 617,860, Feb. 23, 1967, abandoned. This application Oct. 24, 1969, Ser. No. 869,386
The portion of the term of this patent subsequent to Apr. 22, 1992, has been disclaimed.
Int. Cl.^{3} A01N *57/00*
U.S. Cl. 71—86 **24 Claims**

1. A method for regulating plant growth which comprises applying to the plant an effective but non-phototoxic amount with respect to the plant being treated, of 2-chloroethylphosphonic acid.

4,374,662
DIPHENYL SULFONE COMPOUNDS, AND THEIR PRODUCTION AND USE
Hiroyuki Konishi; Naganori Hino, Osaka; Hiroshi Matsumoto, Sonehigashi, and Ryo Yoshida, Kawanishi, all of Japan, assignors to Sumitomo Chemical Company, Limited, Osaka, Japan
Filed Nov. 6, 1981, Ser. No. 318,999
Claims priority, application Japan, Nov. 17, 1980, 55-162319
Int. Cl.^{3} A01N *41/10;* **C07C** *147/06*
U.S. Cl. 71—103 **11 Claims**

1. A compound of the formula:

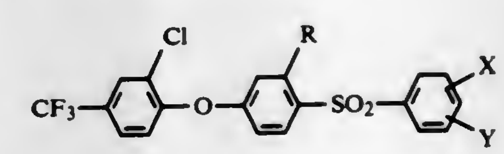

wherein R is a hydrogen atom or a lower alkoxy group and X and Y, being the same or different, are each a hydrogen atom, a halogen atom, a lower alkyl group, a lower alkoxy group, a carboxy(lower)alkoxy group or a lower alkoxycarbonyl(lower)alkoxy group.

11. A method for preventing or exterminating weeds which comprises applying a herbicidally effective amount of the compound according to claim 1 to the area where the weeds grow or will grow.

4,374,663

METHOD AND APPARATUS FOR REDUCING AN IRON OXIDE MATERIAL IN A FLUIDIZED BED

Per H. Collin, Stocksund, and Erik A. Bengtsson, Borlänge, both of Sweden, assignors to Stora Kopparbergs Bergslags AB, Falun, Sweden

Filed Jan. 14, 1981, Ser. No. 224,882

Claims priority, application Sweden, Jan. 16, 1982, 8000369

Int. Cl.[3] C21B *13/02*

U.S. Cl. 75—26 **8 Claims**

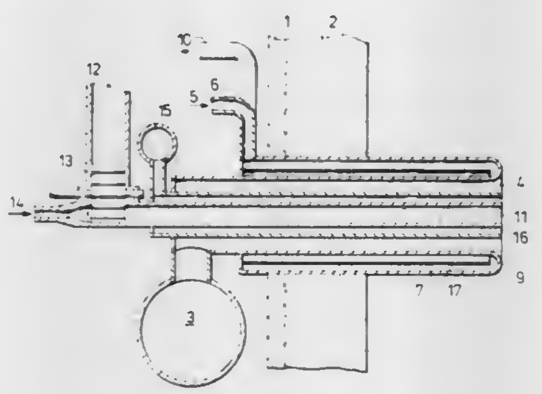

1. A method for the reduction of finely-divided iron oxide material in a fluidized bed reactor by means of reducing gases formed at the partial combustion of finely-divided carbonaceous material in the fluidized bed by a gas containing molecular oxygen, said gas being supplied to the fluidized bed through nozzles extending into the fluidized bed a distance at least twice the diameter of the nozzle, comprising: cooling the opening and the exterior surface of the nozzles to a temperature lower than 200° C. below the melting point of the reduced metal, the nozzles being thus cooled along a distance from their opening which is at least twice the inside diameter of the opening, by means of a coolant flowing through a cooling jacket.

4,374,664

PROCESS FOR DESULFURIZING MOLTEN PIG IRON

Toshiharu Mitsuo, Sakai; Takeshi Shoji, Takaishi, and Shin-ichi Sanuki, Kishiwada, all of Japan, assignors to Nippon Steel Corporation, Japan

Filed Feb. 15, 1980, Ser. No. 122,077

Claims priority, application Japan, Feb. 16, 1979, 54-16067

Int. Cl.[3] C21C *7/02*

U.S. Cl. 75—58 **10 Claims**

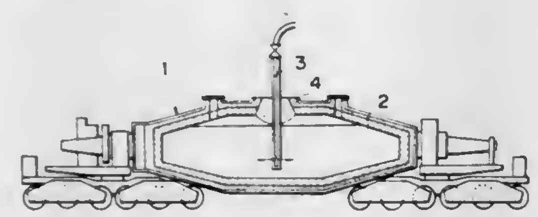

1. In a method for the desulfurization of molten pig iron by adding powdered aluminum and CaO to the molten pig iron, the improvement which comprises adding aluminum as a powder with CaO, alumina or both, whereby splashing associated with the addition of aluminum alone is reduced and wherein the aluminum is added in a quantity sufficient to have an aluminum concentration in the molten pig iron by weight % of (0.01–0.1)×(the concentration of silicon in the molten pig iron by weight %)+(0.2–1.0)× (concentration of sulfur by weight % to be removed from the molten pig iron).

4,374,665

MAGNETOSTRICTIVE DEVICES

Norman C. Koon, Woodbridge, Va., assignor to The United States of America as represented by the Secretary of the Navy, Washington, D.C.

Filed Oct. 23, 1981, Ser. No. 314,327

Int. Cl.[3] C22C *33/00*

U.S. Cl. 75—123 E **20 Claims**

1. In a magnetostrictive device, the improvement comprising a magnetostrictive component consisting essentially of an amorphous alloy represented by the formula:

$(M_wX_xB_{1-w-x})_{1-y}(R_zLa_{1-z})$ where w is from about 0.7 to about 0.9; x is from 0 to about 0.10; y is from about 0.05 to about 0.15; z is from 0 to about 0.95; M is selected from the class consisting of iron, cobalt, an iron-cobalt alloy, an iron-manganese alloy having at least 50 atomic percent iron, an iron-cobalt-manganese alloy having at least 50 percent iron and cobalt, X is a auxillary glass former selected from the class consisting of phosphorous, carbon, silicon, aluminum, arsenic, germanium, indium, antimony, bismuth, tin, and mixtures thereof, and R is a lanthanide selected from the class consisting of promethium, samarium, terbium, dysprosium, holmium, erbium thulium, and mixtures thereof.

4,374,666

STABILIZED FERRITIC STAINLESS STEEL FOR PREHEATER AND REHEATER EQUIPMENT APPLICATIONS

Thomas M. Devine, Jr., Scotia, N.Y., assignor to General Electric Company, Schenectady, N.Y.

Continuation-in-part of Ser. No. 234,213, Feb. 13, 1981, abandoned. This application Mar. 16, 1981, Ser. No. 244,379

Int. Cl.[3] C22C *38/28*

U.S. Cl. 75—126 D **1 Claim**

1. A titanium-stabilized and corrosion-resistant ferritic stainless steel which exhibits long-time stability against sensitization at intermediate service temperatures in the as-welded condition or following a high temperature anneal consisting essentially of, in weight percent,

Carbon	=	0.025% max
Nitrogen	=	0.025% max
Carbon + Nitrogen	=	0.045% max
$\left(\frac{\text{Titanium}}{\text{Carbon}}\right)$	≧	50
Silicon	=	1.0% max
Manganese	=	1.0% max
Phosphorous	=	0.04% max
Sulfur	=	0.03% max
Chromium	=	12–13%

the balance iron.

4,374,667

FERROVANADIUM CARBIDE ADDITION AGENTS AND PROCESS FOR THEIR PRODUCTION

Frederick H. Perfect, Wyomissing, Pa., assignor to Reading Alloys, Inc., Robesonia, Pa.

Filed Oct. 14, 1981, Ser. No. 311,339

Int. Cl.[3] C22C *35/00*

U.S. Cl. 420—424 **3 Claims**

1. A ferrovanadium carbide addition agent comprising 75 to 85% vanadium, 8 to 12% carbon, 8 to 12% iron, less than 2% oxygen and having a density of from about 5.8 to about 6.2.

4,374,668

GOLD BASED ELECTRICAL MATERIALS

Jaydev D. Desai, Clifton Park, and William G. Moffatt, Ballston Lake, both of N.Y., assignors to The United States of America as represented by the Secretary of the Navy, Washington, D.C.

Filed Apr. 29, 1981, Ser. No. 258,829

Int. Cl.[3] C22C *5/02*

U.S. Cl. 420—507 **4 Claims**

1. A gold based electrical contact material comprising:

a solid solution consisting essentially of gold, and residual unoxidized cerium and a dispersion of cerium oxide, the cerium oxide having been formed by internal oxidation by subjecting the solid solution to an oxidizing atmosphere of oxygen at a temperature below the melting temperature of the solid solution.

3. A gold based electrical contact material comprising:

a solid solution consisting essentially of gold, and residual unoxidized hafnium and a dispersion of hafnium oxide, the hafnium oxide having been formed by internal oxidation by subjecting the solid solution to an oxidizing atmosphere of oxygen at a temperature below the melting temperature of the solid solution.

4,374,669

CARDIOVASCULAR PROSTHETIC DEVICES AND IMPLANTS WITH POROUS SYSTEMS

David C. Mac Gregor, 81 Wimbleton Rd., Islington, Ontario, Canada

Division of Ser. No. 824,296, Aug. 15, 1977, Pat. No. 4,281,669, which is a continuation-in-part of Ser. No. 683,382, May 5, 1976, Pat. No. 4,101,984. This application Nov. 19, 1979, Ser. No. 95,151

Claims priority, application Canada, May 9, 1975, 226993; Aug. 13, 1976, 259054; United Kingdom, Dec. 22, 1975, 52474; Oct. 19, 1976, 43407

Int. Cl.[3] F16H *13/00*

U.S. Cl. 75—208 R **3 Claims**

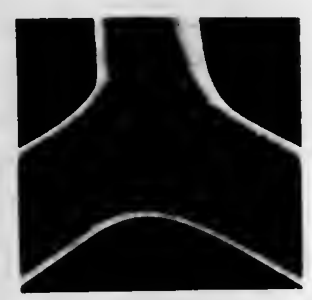

1. A method of formation of a composite structure in cardiovascular devices or implants constructed of rigid metal inert to blood to inhibit the incidence of thrombo-embolism and consisting of a rigid coherent metal substrate and a porous coating formed on and adhered to blood-engaging surfaces of said substrate consisting of a plurality of small discrete particles bonded together at their points of contact with each other in at least two layers to define a plurality of connected interstitial pores uniformly distributed throughout the coating, said method comprising:

roughening the coherent metal substrate surfaces desired to be coated,

forming a viscous self-supporting coating of a plurality of layers of at least one metal or at least one thermally-decomposable metal compound particles adhesively bound together and to the substrate,

drying said adhesive to provide a preform on said substrate; and

sintering said preform to cause interconnection of metal particles to each other and to said substrate.

4,374,670

AQUEOUS POLYMERIC LATEX COATING COMPOSITIONS, PRODUCTS PRODUCED THEREBY, METHODS FOR PREPARING SUCH COMPOSITIONS, AND METHODS FOR USING SUCH COMPOSITIONS

Robert J. Slocombe, University City, Mo., assignor to Monsanto Company, St. Louis, Mo.

Filed Jun. 16, 1977, Ser. No. 807,267

Int. Cl.[3] C09D *11/02*

U.S. Cl. 106—20 **33 Claims**

1. A printing ink comprising

(i) a pigment and

(ii) a liquid coating composition comprising

(a) colloidal polymer particles of at least one polymer capable of being deposited in the form of a film;

(b) a precursor of a material capable of disrupting the colloidal stability of the polymer particles to cause film formation when said printing ink is applied to a substrate; and

(c) a liquid dispersion medium.

4,374,671

COLOR DEVELOPER, RECORDING UNIT HAVING A LAYER OF THE COLOR DEVELOPER AND PROCESS FOR PRODUCTION THEREOF

Takao Hayashi; Hajime Kato; Akio Miyamoto, and Makoto Yoshida, all of Fujinomiya, Japan

Continuation-in-part of Ser. No. 949,478, Oct. 10, 1978, abandoned, which is a continuation-in-part of Ser. No. 626,003, Oct. 28, 1975, abandoned, which is a continuation of Ser. No. 183,647, Sep. 24, 1971, abandoned. This application Mar. 13, 1980, Ser. No. 129,953

Claims priority, application Japan, Sep. 24, 1970, 45/83651; Oct. 23, 1970, 45/93245; Dec. 15, 1970, 45/112038; Dec. 26, 1970, 45/118979

Int. Cl.[3] C09D *11/00*

U.S. Cl. 106—21 **12 Claims**

1. A color developer capable of forming a distinct color when contacted with a color former, comprising zinc oxide, at least one acid selected from the group consisting of salicylic acid and nuclear substituted derivatives thereof and at least one metal silicate as an inorganic pigment in an amount sufficient to increase the color developing ability and light resistance of the color developer, said acid being present in an amount of about 1 to 100 parts by weight per 100 parts by weight of zinc oxide.

4,374,672

METHOD OF AND COMPOSITION FOR PRODUCING A STABILIZED FILL MATERIAL

Joseph Funston, Detroit; William C. Krell, Grosse Pointe Woods, and Franklin V. Zimmer, Southfield, all of Mich., assignors to The Detroit Edison Company, Detroit, Mich.

Continuation of Ser. No. 137,486, Apr. 4, 1980, abandoned. This application Oct. 19, 1981, Ser. No. 312,889

Int. Cl.[3] C04B *7/02*

U.S. Cl. 106—97 **8 Claims**

1. A method of producing and placing a stabilized fill material in water comprising mixing cement, fly ash and water in predetermined portions of approximately 45–80% by weight fly ash, 1–6% by weight Portland cement, and 20–50% by weight water and placing the fill material so produced directly in water while it is still in a flowable state.

4,374,673

STABLE DISPERSIONS OF FORTIFIED ROSIN

Paul H. Aldrich, London Britton Township, Chester County, Pa., assignor to Hercules Incorporated, Wilmington, Del.

Filed Dec. 31, 1980, Ser. No. 221,760

Int. Cl.[3] C08L *93/04*

U.S. Cl. 106—212 **9 Claims**

1. An aqueous dispersion of fortified rosin consisting essentially of, by weight, (A) from about 5% to about 50% fortified rosin; (B) from about 0.5% to about 10% of at least one water-

soluble or water-dispersible cationic starch dispersing agent; (C) from about 0.1% to 4% of at least one anionic surface active agent; and (D) water to 100%, component (B) being selected from

(I) a cationic starch having the formula

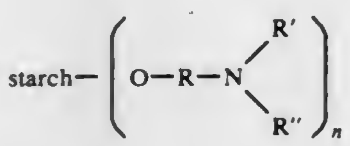

wherein R is alkylene, R' and R'' are each selected from the group consisting of alkyl, aryl, and aralkyl and n is from about 0.02 to about 0.05,

$$\text{starch}-[OCH_2\underset{\displaystyle OH}{\underset{|}{C}}HCH_2\overset{+}{N}(CH_3)_3Cl^-]_n \qquad \text{(II)}$$

wherein n is as above defined, and

(III) starch—$(OCH_2CH_2NH_2)_n$ where n is above defined, said fortified rosin (A) being the adduct reaction product of rosin and an acidic compound containing the

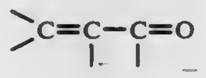

group.

4,374,674
ULTRAVIOLET LIGHT ABSORBING AGENTS AND COMPOSITIONS AND ARTICLES CONTAINING SAME

Bruce A. Ashby, and Siegfried H. Schroeter, both of Schenectady, N.Y., assignors to General Electric Co., Waterford, N.Y.
Division of Ser. No. 154,622, May 30, 1980, Pat. No. 4,278,804. This application Jan. 15, 1981, Ser. No. 225,429
Int. Cl.³ C09K *3/00*
U.S. Cl. 106—287.12 **11 Claims**

1. An aqueous coating composition, which comprises:

(a) a dispersion of a colloidal silica in a solution of the partial condensate of a silanol having the formula $RSi(OH)_3$ where R is selected from the group consisting of alkyl having 1 to 3 carbon atoms and aryl, at least 70 weight percent of which is $CH_3Si(OH)_3$in a mixture of an aliphatic alcohol and water, said dispersion containing from 10 to 50 percent by weight of solids, said solids consisting essentially of 10 to 70 percent by weight of the colloidal silica and 30 to 90 percent by weight of the partial condensate, and

(b) an effective amount of an ultraviolet light absorbing agent comprising a compound having the formula

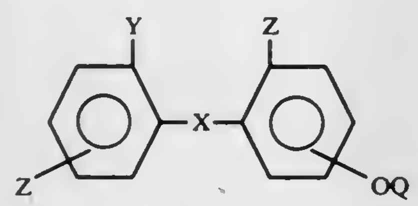

wherein:
X is

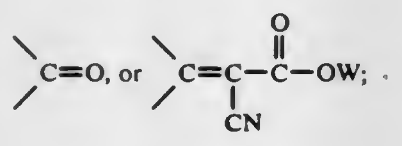

Y is H or OH;
Z is H, OH, OQ or OW, where at least one Z is OH if Y is H;
Q is $-CH_2(CH_2)_nSi(R_2)_x(OR_1)_y$; and
W is $-C_mH_{2m+1}$;
where x=0, 1 or 2, y=1, 2 or 3, x+y=3, and R_1=alkyl or alkanoyl having 1 to 6 carbon atoms, R_2=alkyl having from 1 to 6 carbon atoms, n=0, 1 or 2 and m=1 to 18.

4,374,675
POST-TREATED TITANIUM DIOXIDE AND PROCESS FOR PRODUCING SAME

Carlo Scotti, Voghera; Renato C. Pace, Alessandria, and Sergio Carra', Milan, all of Italy, assignors to Montedison, S.p.A., Italy
Filed Jan. 9, 1981, Ser. No. 223,553
Claims priority, application Italy, Jan. 11, 1980, 19156 A/80
Int. Cl.³ C09C *1/36*
U.S. Cl. 106—300 **11 Claims**

1. Titanium dioxide particles of morphological and granulometric pigmentary characteristics, said particles having a chemically reactive coating consisting essentially of a mixture of oxide and oxichloride selected from the group consisting of Al_2O_3 and AlOCl, SiO_2 and $SiOCl_2$, and ZrO_2 and $ZrOCl_2$.

3. A process for the preparation of TiO_2 particles with pigmentary morphological and granulometric characteristics having a chemically reactive coating, said process comprising the steps of: activating the surface of the particles in a moving bed by thermally treating said particles with an anhydrous gas at temperatures between about 400° and about 600° C.; and thereupon further reacting said particles in a moving bed with an inorganic chloride selected from the group consisting of $AlCl_3$, $SiCl_4$ and $ZrCl_4$, in the presence of a carrier gas and at temperatures between about 350° and about 600° C.

9. A process for preparing a titanium dioxide pigment coated with organic substances selected from the group consisting essentially of substances containing aminic, carboxylic or hydroxylic groups capable of imparting to the pigments an affinity for organic substances for organic vehicles; wherein the chemically reactive coated TiO_2 particles prepared according to the process of claim 3, are reacted with organic substances having $-NH_2$; $-COOH$ or $-OH$ groups.

4,374,676
HEAT STABLE YELLOW IRON OXIDES CONTAINING ANTIMONY

Jibei Senda; Yoshihiro Inoue; Toshiaki Uenishi, all of Ube; Hidefumi Harada, Yamaguchi; Kouji Nakata, Ube; Akio Akagi, Ube, and Takanori Yamasaki, Ube, all of Japan, assignors to Titan Kogyo K.K., Japan
Continuation-in-part of Ser. No. 154,570, May 29, 1980, abandoned. This application Dec. 7, 1981, Ser. No. 327,868
Claims priority, application Japan, May 30, 1979, 54-66103
Int. Cl.³ C01G *49/02;* **C09C** *1/24*
U.S. Cl. 106—303 **14 Claims**

1. The preparation of a heat stable yellow iron oxide pigment, comprising:

(a) forming an aqueous dispersion of yellow iron oxide (α-FeOOH), the dispersion having the approximate composition of about 30 to about 200 parts yellow iron oxide per 1,000 parts water,

(b) adding thereto an aqueous alkaline solution of a soluble compound of antimony from the group consisting of sodium antimonite, potassium antimonite, $SbCl_3$, SbF_3 and $Sb_2(SO_4)_3$, the solution having the approximate composition of the antimony equivalent of about 0.03 to 20 parts antimony trioxide, about 40 to 80 parts alkali metal hydroxide, and about 400 parts water,

(c) diluting the resultant mixture, the diluting volume ranging from about 1.2 to about 5 volumes per original volume of mixture,

(d) separating the resultant produce into a solid phase and an aqueous phase, and

(e) recovering the solid phase.

14. A composition of α-Fe(OOH) having at least a partial film or coating of (FeSb)OOH solid solution.

4,374,677
PREPARATION OF IMPROVED HEAT STABLE YELLOW IRON OXIDE PIGMENTS

Jibei Senda; Yoshihiro Inoue; Toshiaki Uenishi, all of Ube; Hidefumi Harada, Yamaguchi; Kouji Nakata, and Akio Akagi, both of Ube, all of Japan, assignors to Titan Kogyo K.K. Japan, Japan
Continuation-in-part of Ser. No. 154,350, May 29, 1980, abandoned. This application Oct. 5, 1981, Ser. No. 308,338
Claims priority, application Japan, May 20, 1979, 54-66101
Int. Cl.³ C01G *49/02;* **C09C** *1/24*
U.S. Cl. 106—309 **6 Claims**

1. The preparation of a yellow iron oxide pigment having improved heat stability, comprising the steps of

(a) forming an aqueous slurry of from about 30 to about 200 parts yellow iron oxide (α-FeOOH), from about 1 to about 100 parts a soluble ferric salt, selected from the group consisting of ferric sulfate, ferric chloride, ferric nitrate, ferric oxalate, and ferric thiocyanate, an alkali metal hydroxide in an amount to provide the slurry with a pH of greater than 10, and from about 20 to about 100 parts of a water-soluble or alkali-soluble aluminum compound, selected from the group consisting of sodium aluminate, potassium aluminate, aluminum chloride, potash alum, and aluminum nitrate, all based on 1000 parts water,

(b) subjecting the resultant mixture to a first hydrothermal treatment carried out at a temperature of from about 100° C. to about 240° C. for a time greater than 30 minutes,

(c) separating the treated mixture into a first solid phase and a first liquid phase,

(d) dispersing the first solid phase of step (c) in water,

(e) subjecting the first solid phase to a second hydrothermal treatment at a temperature of at least 250° C. to about 350° C. for a time greater than 30 minutes,

(f) separating the treated mixture into a second solid phase and a second liquid phase, and

(g) recovering the second solid phase and processing said phase to give a treated yellow iron pigment having an improved heat stability.

4,374,678
PROCESS FOR FORMING HGCOTE ALLOYS SELECTIVELY BY IR ILLUMINATION

Carlos A. Castro, Garland, Tex., assignor to Texas Instruments Incorporated, Dallas, Tex.
Filed Jun. 1, 1981, Ser. No. 269,292
Int. Cl.³ H01L *21/42, 21/423, 21/36*
U.S. Cl. 148—1.5 **13 Claims**

1. A process for forming an alloy of mercury, cadmium, and tellurium, having a desired bandgap, comprising the steps of: providing a CdTe substrate;

depositing a layer of HgTe on said CdTe substrate;

illuminating said CdTe substrate, through a surface of said CdTe substrate on which said layer of HgTe was not

deposited, with infrared light having a wavelength longer than that which corresponds to the bandgap of the desired alloy of mercury, cadmium, and tellurium.

4,374,679
ELECTRICAL RESISTANT ARTICLE HAVING A SMALL TEMPERATURE DEPENDENCE OF ELECTRIC RESISTANCE OVER A WIDE TEMPERATURE RANGE AND A METHOD OF PRODUCING THE SAME

Hakaru Masumoto, and Naoji Nakamura, both of Sendai, Japan, assignors to The Foundation: The Research Institute of Electric and Magnetic Alloys, Sendai, Japan
Filed May 20, 1980, Ser. No. 151,712
Int. Cl.³ C22F *1/14*
U.S. Cl. 148—2 **3 Claims**

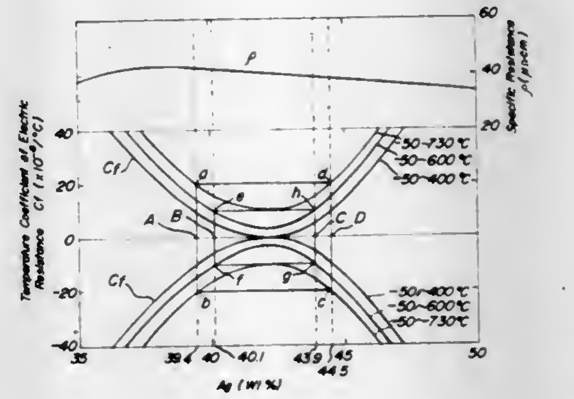

1. A method of producing electrical resistant alloys comprising, the step of melting a starting material consisting essentially of 55.5 to 60.6 wt. % of palladium and 44.5 to 39.4 wt. % of silver, pouring the melt into a mold and shaping it into a desired form of wire or thin sheet by hot working and cold working, heating the shaped article at a recrystallization temperature of 500° to 1,100° C. in air or a nonoxidizing atmosphere or in vacuo for a time of not less than 2 seconds to not more than 100 hours, and slow cooling it to remove internal stress to thereby obtain an alloy having a temperature coefficient of electric resistance of $\pm 20\times 10^{-6}/°C.$ over a temperature range of −50° C. to +730° C.

4,374,680

CORROSION-RESISTANT WELDABLE MARTENSITIC STAINLESS STEEL, PROCESS FOR THE MANUFACTURE THEREOF AND ARTICLES

Vladimir G. Azbukin, Iskrovsky prospekt. 28, kv. 430; Jury F. Balandin, ulitsa Basseinaya, 117, korpus 1; Igor V. Gorynin, ulitsa Gromova, 16, kv. 50; Lev Y. Gluskin, ulitsa Grafova, 2, kv. 37; Jury I. Zvezdin, Kostromskoi prospekt, 42, kv. 23; Alexandr G. Ignatenko, Grazhdansky prospekt, 23/2, kv. 74; Alexandr N. Krasnov, ulitsa Shotmana, 4, kv. 203, all of, Leningrad; Rostislav K. Melekhov, ulitsa Ugorskaya, 27, kv. 10, Lvov; Inna S. Osipova, ulitsa Ryleeva, 21, kv. 9, Leningrad; Valery N. Pavlov, Dmitrovsky pereulok, 11, kv. 16, Leningrad; Alexandr A. Khokhlov, ulitsa Karpinskogo, 23/1, kv. 15, Leningrad; Ivan A. Stepanov, ulitsa Chaikovskogo, 33, kv. 30, Leningrad; Alexandr F. Anfimov, ulitsa Ushinskogo, 7, korpus 1, kv. 39, Leningrad; Vasily V. Ardentov, ulitsa Gromova, 16, kv. 43, Leningrad; Viktor M. Burmakin, ulitsa Sedova, 86, kv. 199, Leningrad; Viktor A. Ignatov, ulitsa Sofii Kovalevskoi, 10, korpus 2, kv. 169, Leningrad; Eduard A. Rokhlin, Varshavskaya ulitsa, 58, kv. 91, Leningrad, and Vladimir V. Zhitkov, Promyshlennaya ulitsa, 38, kv. 66, Leningrad, all of U.S.S.R.

Division of Ser. No. 91,157, Nov. 5, 1979, Pat. No. 4,299,623. This application Mar. 23, 1981, Ser. No. 246,260

Int. Cl.³ C21D *1/18;* **C22C** *38/48, 38/50*

U.S. Cl. 148—2 **2 Claims**

1. A process for the manufacture of a corrosion-resistant weldable martensitic steel, residing in preparing a molten mass essentially consisting of carbon 0.06 to 0.10 weight percent, chromium 15.1 to 16.5 weight percent, nickel 3.5 to 4.45 weight percent, silicon 0.10 to 0.60 weight percent, manganese 0.20 to 0.50 weight percent, at least one element selected from the group consisting of niobium 0.25 to 0.40 weight percent and zirconium 0.05 to 0.20 weight percent, at least one element selected from the group consisting of yttrium 0.05 to 0.20 weight percent, cerium 0.05 to 0.15 weight percent and lanthanum 0.05 to 0.15 weight percent, phosphorus not exceeding 0.025 weight percent, sulfur not exceeding 0.02 weight percent, copper not exceeding 0.20 weight percent, the remainder being substantially iron and unavoidable impurities, pouring the molten mass into a mould and permitting it to solidify therein followed by cooling the obtained ingot, said cooling step being carried out in at least two stages, the first stage residing in cooling said ingot to a temperature laying in the martensite transformation start-end interval but not lower than to 100° C. and in its immediate heating up to tempering temperatures ranging from 600° to 650° C., each subsequent stage comprising cooling said ingot to martensite transformation temperatures but by at least 50° C. lower than the cooling temperature of the previous stage, thus bringing with such a multistage cooling the temperature of the ingot down to a value below the temperature of the end of martensite transformation, followed by final tempering in the temperature range from 600° to 650° C. and subsequent cooling to room temperature.

4,374,681

SYSTEM FOR CONTROLLING THE COMPOSITION OF CHEMICAL TREATMENT BATHS

John E. Schueneman, Waukegan, Ill., assignor to Coral Chemical Company, Waukegan, Ill.

Filed May 11, 1981, Ser. No. 262,288

Int. Cl.³ C23F *5/02*

U.S. Cl. 148—6.14 R **9 Claims**

1. A control apparatus for detecting and controlling the composition of chemical cleaning and conversion coating treatment baths used in the production of individual manufactured metal articles, said apparatus comprising, in combination,

a containing tank means for receiving a chemical cleaning solution and containing tank means for receiving a chemical conversion coating solution,

a control system adapted to control periodic replenishment of the solutions in said chemical cleaning solution containing tank means and said chemical conversion coating containing tank means,

said control system including means for detecting the pH of said solutions in said tank means, first comparator means for comparing said pH to a predeterminable set point pH, and first dispensing means for delivery of a predeterminable volume of replenishing fluid to said tank means in response to said detected and set point pHs,

second dispensing means for adding a predeterminable amount of chemical cleaning accelerator to said chemical cleaning solution containing tank means, said second dispensing means including counting means for determining the number of manufactured articles supplied from time to time to said cleaning and treatment tank means,

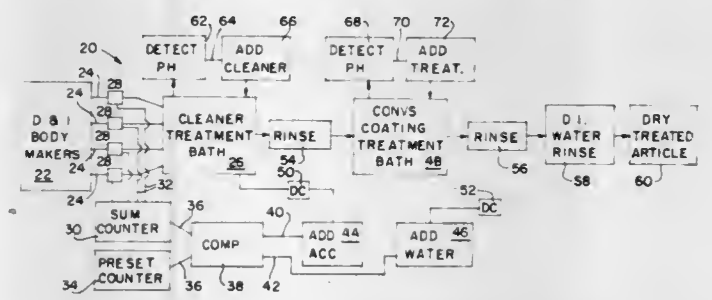

second comparator means for comparing the number of said articles supplied for treatment to a set point number, and

coincidence determining means responsive to coincidence in said number of articles counted and said set point number for energizing said adding means, whereby the conditions in said cleaning and treating tanks may be made to depend both on pH conditions in said tanks and on the number of articles treated by said apparatus.

4,374,682

PROCESS FOR PRODUCING DEEP-DRAWING COLD ROLLED STEEL STRIPS BY SHORT-TIME CONTINUOUS ANNEALING

Mitsunobu Abe, Tokyo; Ikushi Yoshida, Yokohama; Munetsugu Matsuo, Kawasaki, and Hiroshi Hayakawa, Kitakyusyu, all of Japan, assignors to Nippon Steel Corporation, Tokyo, Japan

Continuation-in-part of Ser. No. 117,302, Jan. 31, 1980, abandoned. This application Oct. 9, 1980, Ser. No. 195,654

Claims priority, application Japan, Feb. 2, 1979, 54-10493

Int. Cl.³ C21D *9/48*

U.S. Cl. 148—12 C **13 Claims**

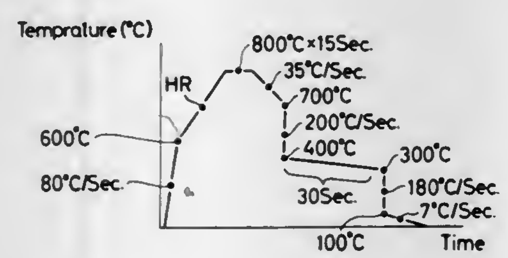

1. A process for producing a cold rolled steel strip having excellent deep drawing properties by a short-time continuous annealing, which comprises:

hot rolling a low carbon steel slab of steel having a carbon content of from about 0.003 to 0.08% into a steel strip;

cold rolling the hot rolled steel strip;

rapidly heating the cold rolled steel strip to a recrystallization temperature range at a heating rate not less than 40° C./second;

slowly heating the thus rapidly heated steel strip to an annealing temperature at a heating rate ranging from 5° to 30° C./second;

annealing the thus slowly heated steel strip at an annealing temperature T which is no lower than 700° C. and no higher than the A_3 transformation temperature and for an annealing time t no shorter than $[8-0.03\ (T-680)]$ seconds and no longer than $[80-0.15\ (T-680)]$ seconds;

initially slowly cooling the thus annealed steel strip at a cooling rate less than 50° C. second, and then rapidly cooling the strip at a cooling rate not less than 50° C./second from a temperature T_Q ranging from higher than 600° C. to no higher than $[T-0.027\ (T-680)\ (\sqrt{t}+23.7)]$°C. to an over-ageing temperature range; and

subjecting the thus cooled steel strip to an over-ageing treatment at a temperature ranging from 300° to 500° C. for a period of time ranging from 10 seconds to 5 minutes.

4,374,683

PROCESS FOR MANUFACTURING FERRITIC STAINLESS STEEL SHEET HAVING GOOD FORMABILITY, SURFACE APPEARANCE AND CORROSION RESISTANCE

Masao Koike, Nishinomiya; Yutaka Hayashi, Kobe, and Masayoshi Ogaya, Joetsu, all of Japan, assignors to Sumitomo Metal Industries, Ltd., Osaka and Nippon Stainless Steel Co., Ltd., Tokyo, both of, Japan

Filed Feb. 24, 1981, Ser. No. 237,650

Claims priority, application Japan, Feb. 29, 1980, 55-25619

Int. Cl.³ C21D *8/04;* **C22C** *38/20, 38/26*

U.S. Cl. 148—12 EA **7 Claims**

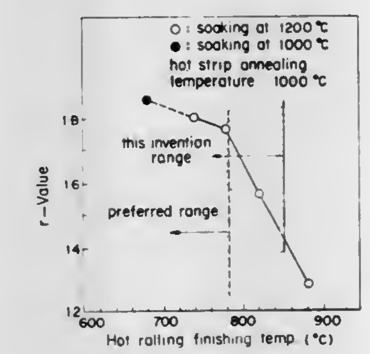

1. A process for manufacturing a ferritic stainless steel sheet having good formability, surface appearance and corrosion resistance, comprising the steps of: hot rolling a steel composition which consists essentially of:

C: not greater than 0.02%
Si: not greater than 1.0%
Mn: not greater than 1.0%
P: not greater than 0.04%
S: not greater than 0.005%
Cr: 12.00–25.00%
Cu: 0.1–2.0%
Nb: 0.2–2.0%

the balance Fe with incidental impurities with a finishing temperature of 850° C. or less, annealing the resulting hot rolled steel strip at a temperature of 950° C.–1050° C., and then carrying out cold rolling and recrystallization annealing.

4. A process for manufacturing a ferritic stainless steel sheet having good formability, surface appearance and corrosion resistance, comprising the steps of: hot rolling a steel composition which consists essentially of:

C: not greater than 0.02%
Si: 0.01–1.0%
Mn: 0.01–1.0%
P: not greater than 0.04%
S: not greater than 0.005%
N: not greater than 0.02%
Cr: 15–25%
Cu: 0.3–1.0%
Nb: 0.3–0.8%

the balance iron with incidental impurities, with a finishing temperature of 850° C. or less, annealing the resulting hot rolled steel strip at a temperature of 950° C.–1050° C., and then carrying out cold rolling and recrystallization annealing.

4,374,684

HEAT TREATMENT OF CADMIUM MERCURY TELLURIDE

William F. H. Micklethwaite, Rossland, Canada, assignor to Cominco Ltd., Vancouver, Canada

Filed Jan. 19, 1981, Ser. No. 226,291

Claims priority, application Canada, Jul. 18, 1980, 356569

Int. Cl.³ C22F *1/02*

U.S. Cl. 148—13.1 **7 Claims**

1. A method for the heat treatment of homogeneous single crystal cadmium mercury telluride represented by the formula $(Cd_xHg_{1-x})_yTe_{1-y}$ wherein x has values between zero and one and y has values in the range of about 0.49 to 0.51 in an ampoule, comprising the steps of placing in said ampoule slices of said cadmium mercury telluride and a predetermined amount of mercury, evacuating and sealing the ampoule, heating the ampoule to a constant uniform temperature in the range of from about 300 K. to a temperature near but below the solidus temperature of said slices of cadmium mercury telluride, said predetermined amount of mercury being such that only vapor of said predetermined amount of mercury is present in the ampoule at said constant uniform temperature and the vapor pressure of mercury is less than the saturation vapor pressure of mercury at said constant uniform temperature, maintaining said constant uniform temperature for a period in the range of about 1 to 5000 hours, and recovering treated slices.

4,374,685

METHOD OF MAKING A COATED CUTTING TIP

Junichiro Suzuki, and Hiroshi Tanaka, both of Aichi, Japan, assignors to NGK Spark Plug Co., Ltd., Aichi, Japan

Filed Jun. 29, 1981, Ser. No. 278,038

Claims priority, application Japan, Jul. 2, 1980, 55-90348

Int. Cl.³ B22F *3/24, 7/02*

U.S. Cl. 148—126.1 **4 Claims**

1. A method of making a coated tip for cutting purposes, comprising the steps of heat treating a WC-based ultrahard alloy containing WC, at least one nitride selected from the group consisting of TiN, TaN and NbN, and a bonding metal at a temperature of 800° C. to 1,300° C.; in an atmosphere containing nitrogen for a sufficient time to cause said nitride in a layer in the vicinity of the surface of said alloy to move to said surface to form a layer of said nitride on said surface and to form an alloy layer of said WC and said bonding metal in which said nitride has been reduced; and coating said surface with a layer of Al_2O_3.

4,374,686

DELAY COMPOSITION FOR DETONATORS

Alan L. Davitt, Brownsburg, and Kenneth A. Yuill, Alfred, both of Canada, assignors to CXA Ltd./CXA Ltee, North York, Canada

Filed Mar. 11, 1981, Ser. No. 242,531

Claims priority, application Canada, Oct. 10, 1980, 362160

Int. Cl.³ C06B *45/02*

U.S. Cl. 149—21 **5 Claims**

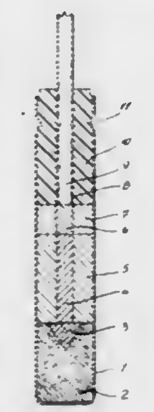

1. A pyrotechnic delay composition adapted for non-electric and electric millisecond delay detonators comprising from 55% to 80% by weight of particulate stannic oxide and from 20% to 45% by weight of particulate silicon.

4,374,687

PROCESS FOR MAKING A BUILT-UP THERMAL INSULATING AND BITUMINOUS WATERPROOFING ASSEMBLY

Kaname Yamamoto, Tokyo, Japan, assignor to Tajima Roofing Co., Ltd., Tokyo, Japan

Division of Ser. No. 152,059, May 20, 1980. This application Nov. 28, 1980, Ser. No. 210,925

Claims priority, application Japan, Jun. 1, 1979, 54-67427

Int. Cl.³ E04D *11/02;* **B32B** *11/02, 11/10*

U.S. Cl. 156—71 **16 Claims**

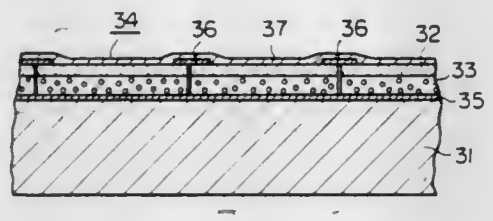

1. A process for making a built-up bituminous waterproofing and thermal insulation assembly, comprising the steps of:

(a) placing onto the surface of a substrate a plurality of prefabricated, thermal insulating and bituminous waterproofing boards, each consisting essentially of (i) a thermal insulating layer having an upper surface and a lower surface, said thermal insulating layer being made of thermal insulating material; (ii) a first, flat, fibrous sheet having an upper surface and a lower surface, the lower surface of said first sheet being bonded to the upper surface of said thermal insulating layer in direct, face-to-face, mutually adhering contact; (iii) a modified bitumen layer having a thickness within the range of from 2 to 25 mm and having an upper surface and a lower surface, said modified bitumen layer consisting essentially of a uniform mixture of waterproofing bitumen and 50% to 90% by weight, based on the total weight of the mixture, of pieces of at least one inorganic filler, the lower surface of said modified bitumen layer being bonded to the upper surface of said first sheet in direct, face-to-face, mutually adhering contact; and (iv) a second, flat, fibrous sheet having an upper surface and a lower surface, the lower surface of said second sheet being bonded to the upper surface of said modified bitumen layer in direct, face-to-face, mutually adhering contact, said boards being placed onto the substrate surface adjacent to one another with the edges of said boards being slightly spaced to provide clearances therebetween, said boards forming a layer on said substrate surface with the thermal insulating layer of each of said boards being in close adhering contact with said substrate surface;

(b) then sealing the clearances between said boards with sealing material; and

(c) then forming a continuous, waterproofing layer over the entire upper surface of said boards and said sealing material, said waterproofing layer being integral therewith.

4,374,688

MARBLEIZED CERAMIC ARTICLES

Andrew Quient, 45 Sugar Maple La., P.O. Box 66, Glen Cove, N.Y. 11542

Filed Mar. 17, 1981, Ser. No. 244,635

Int. Cl.³ B44F *9/04;* **C04B** *33/34*

U.S. Cl. 156—89 **2 Claims**

1. A method of producing ceramic articles with at least one surface having a pattern of sectioned striae, said method including in combination:

a. mixing to incomplete homogeneity a plurality of plastic ceramic masses of contrasting pigmentation to a composite mass,

b. forming the composite mass between a multi-faceted or fluted die which is rotated and a contour-forming template which is stationary,

c. hardening and cutting the hardened composite mass to remove the facets or fluting, and

d. firing to maturation of the cut composite ceramic mass.

4,374,689

METHOD AND APPARATUS FOR FILAMENT WINDING

Dale E. Smith, Windsor, and Warren H. Pinter, East Hartland, both of Conn., assignors to United Technologies Corporation, Hartford, Conn.

Filed Jul. 23, 1981, Ser. No. 286,129

Int. Cl.³ B65H *81/00*

U.S. Cl. 156—169 **4 Claims**

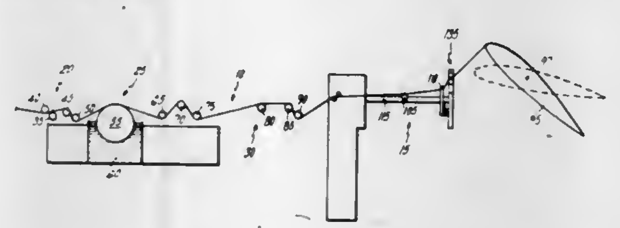

1. A method of filament winding an article comprising the steps of providing a plurality of continuous elongate filaments, forming a band of said filaments by the juxtaposition thereof in mutually spaced, parallel relationship, treating said filament band with an adhesive such that said adhesive is taken up by said filaments, passing said band through a winding eye and winding said filament around a mandrel to form said article,

said method being characterized by the step of drawing said band through a guide fixed with respect to said winding eye subsequently to passing said band therethrough, said guide causing said winding eye to impart a uniform angular displacement to said band for maintenance of band width uniformity irrespective of asymmetrical mandrel shapes.

3. An apparatus for forming an article by winding a plurality of fibers about a form, said apparatus comprising means for forming a plurality of filaments into a band thereof, a winding eye for maintaining proper band orientation with respect to said form, first means for guiding said filamentary band to said winding eye,

said apparatus being characterized by second means disposed between said winding eye and said form and fixed with respect to said winding eye for guiding said band from said winding eye and angularly restraining said band with respect to said winding eye thereby maintaining a uniform payout angle of said band from said eye as said band is wound about said form.

4,374,690

MULTIDIRECTIONALLY ORIENTED FILMS

Peter J. Canterino, Towaco, and Craig E. Allen, Clark, both of N.J., assignors to Mobil Oil Corporation, New York, N.Y.

Filed Dec. 31, 1980, Ser. No. 221,712

Int. Cl.³ B29D *7/14*

U.S. Cl. 156—229 **3 Claims**

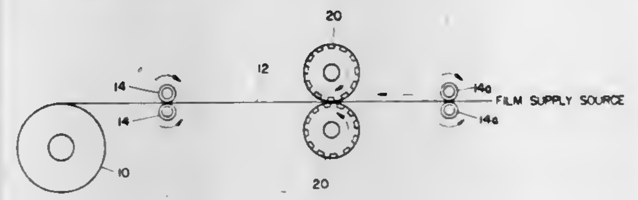

1. A process for multi-direction orienting of a malleable film which comprises pulling a malleable film through the bite between at least one pair of cooperating multi-directional orientation rollers having interengaging surface portions thereby imparting a random orientation to the molecular structure of said film during passage between said rollers.

4,374,691

MATERIAL AND METHOD FOR FORMING PRESSURE TRANSFERABLE GRAPHICS

Jan D. Vanden Bergh, Afton, Minn., assignor to Minnesota Mining and Manufacturing Company, St. Paul, Minn.

Filed May 9, 1980, Ser. No. 148,452

Int. Cl.³ B41M *3/12, 5/26;* **B44C** *1/16*

U.S. Cl. 156—234 **9 Claims**

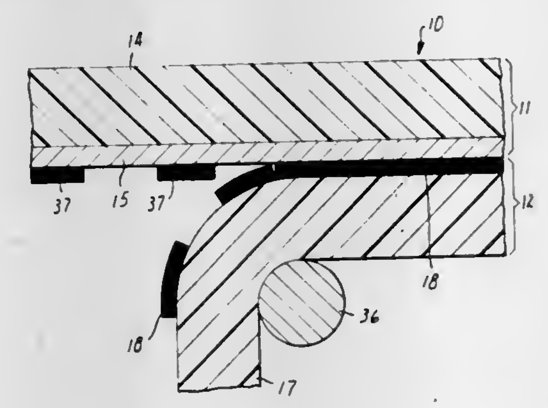

8. A method of forming graphics such as letters, numbers, symbols or pictures and applying the graphics to a substrate comprising the steps of:

providing an accepting portion comprising a receiving web, and a layer of latent adhesive material, which adhesive material is brittle and nontacky at normal room temperature, but is softened and activated when heated to a temperature range slightly above normal room temperature;

providing a transfer portion comprising a donor web, and a frangible, slightly adhesive donor layer releasably adhered to a surface of said donor web;

pressing said layers in face-to-face contact to provide a composite material;

heating the composite material selectively in a graphic pattern above the softening range of said adhesive material so that the layer of adhesive material selectively softens and adheres to the donor layer;

separating the accepting portion and donor web to carry portions of the donor layer to the accepting portion in the configuration of graphics corresponding to the pattern of heating, the donor layer being micrograngular in nature to afford separating lines for the portions generally normal to the surface of the donor web, which separating lines closely conform to the periphery of the pattern of heating;

positioning the separated accepting portion with its portions of the donor layer in contact with the substrate;

pressing the positioned portions of the donor layer against the substrate through the accepting web using pressure alone in the absence of heat to tear the latent adhesive material around the portions, separate the adhesive material over the portions from the receiving web and adhere the portions to the substrate; and

removing the accepting portion.

4,374,692

PROCESS FOR PRODUCING A SURFACE VENEER ON FURNITURE AND THE LIKE

Gabor Sümeghy, Budapest, Hungary, assignor to IV. Ker. Epitoipari Szovetkezet, Budapest, Hungary

Filed Mar. 4, 1981, Ser. No. 240,454

Int. Cl.³ B29C *19/00;* **B32B** *21/08*

U.S. Cl. 156—244.11 **5 Claims**

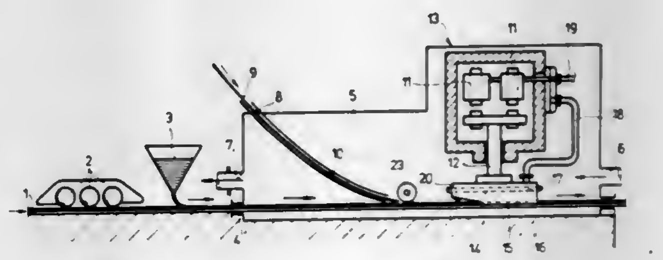

1. A process for the production of a surface wood veneer on furniture and the like comprising the steps of

(a) extruding a synthetic carrier body in the shape of a thin-walled hollow lath,

(b) forming a band from wood veneer corresponding to the width of a surface of said carrier body to be covered,

(c) softening said veneer band,

(d) applying an adhesive between said veneer band and carrier body,

(e) guiding the veneer band onto the surface of said carrier body, and

(f) subjecting said veneer band to the effect of an oscillating pulsator provided with a heat and pressure transmitting stamp in a conditioned space during continuous progress of said veneer band and carrier body and without deformation of said thin-walled, hollow carrier body.

4,374,693
METHOD OF MANUFACTURING ATMOSPHERIC RESISTANT DOORS
William V. Pitt, P.O. Box 7622, Waco, Tex. 76710
Division of Ser. No. 791,426, Apr. 27, 1977, Pat. No. 4,281,493, which is a continuation of Ser. No. 623,094, Oct. 16, 1975, Pat. No. 4,068,431. This application Apr. 30, 1981, Ser. No. 259,355
Int. Cl.[3] B32B *31/18;* E06B *5/00*
U.S. Cl. 156—267 10 Claims

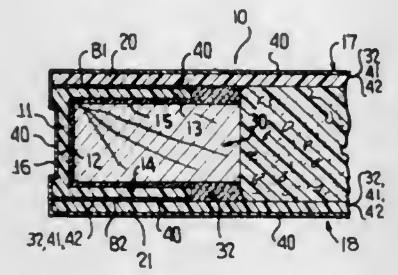

1. A method of making a door comprising the steps of providing a one-piece, integral, continuous, relatively thin walled stile and rail collar of a generally rectangular exterior outline formed of a completely cured admixture of unfoamed polymeric resin and reinforcing material resistant to corrosive and/or high humidity environments of an inwardly opening generally U-shaped cross-sectional configuration formed by a bight and opposite spaced generally parallel faces with interior and exterior surfaces thereof being devoid of exteriorly exposed reinforcing material; providing a pair of plates with each plate being of a generally rectangular outline as defined by terminal edges corresponding in size and shape to the rectangular outline of the collar and being formed of a completely cured admixture of polymeric resin and reinforcing materials resistant to corrosive and/or high humidity environments with an outer surface of each plate being devoid of exteriorly exposed reinforcing material; sandwiching the collar between the plates with all exterior surfaces of the collar and plates facing outwardly, utilizing a polymeric resin bonding material which is resistant to corrosive and/or high humidity environments for bonding the collar and plates together, and creating a generally flush relationship between the terminal edges of the plates and the collar bight exterior surface.

4,374,694
METHOD FOR BONDING ELASTOMERS TO METALS
Donald R. Blenner, and Herman V. Boenig, both of Erie, Pa., assignors to Lord Corporation, Erie, Pa.
Filed Jun. 22, 1981, Ser. No. 276,450
Int. Cl.[3] B05D *3/00, 3/04*
U.S. Cl. 156—272.6 8 Claims

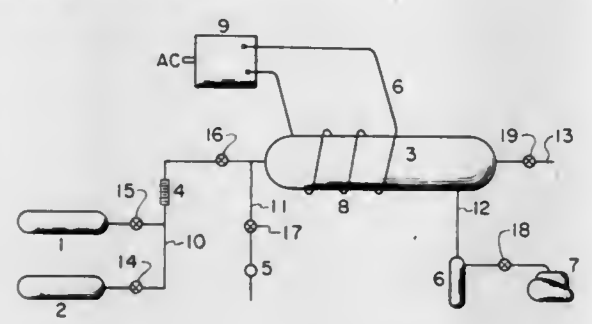

1. A method for bonding vulcanizable natural and synthetic rubbers to metal substrates comprising
(a) exposing at least one metal element to a glow discharge plasma consisting essentially of a gaseous oxirane reactive monomer;
(b) applying to at least one plasma-exposed surface of said metal element an adhesive composition suitable for bonding natural and synthetic rubber to metal;
(c) contacting said adhesively-coated metal element with a vulcanizable rubber composition; and
(d) subjecting the resultant assembly to conditions sufficient to vulcanize said rubber and cure said adhesive.

4,374,695
TOPS FITTED WITH BASINS AND PROCESS FOR THEIR PRODUCTION
Eiji Ikeda; Tomohiro Adachi, both of Nagoya; Yoshihiro Ito, Seto; Ryozo Yamada, Aichi; Akio Taga, Inazawa, and Shigeo Takashima, Aichi, all of Japan, assignors to Aica Kogyo Co., Ltd., Nagoya, Japan
PCT No. PCT/JP80/00063, § 371 Date Dec. 5, 1980, § 102(e) Date Dec. 5, 1980, PCT Pub. No. WO80/02170, PCT Pub. Date Oct. 16, 1980
PCT Filed Apr. 7, 1980, Ser. No. 224,531
Claims priority, application Japan, Apr. 6, 1979, 54-41221; Apr. 6, 1979, 54-41222; Apr. 6, 1979, 54-41223; Apr. 6, 1979, 54-41224; Apr. 6, 1979, 54-41225; Apr. 6, 1979, 54-41226
Int. Cl.[3] E03C *1/33;* B32B *31/00*
U.S. Cl. 156—293 8 Claims

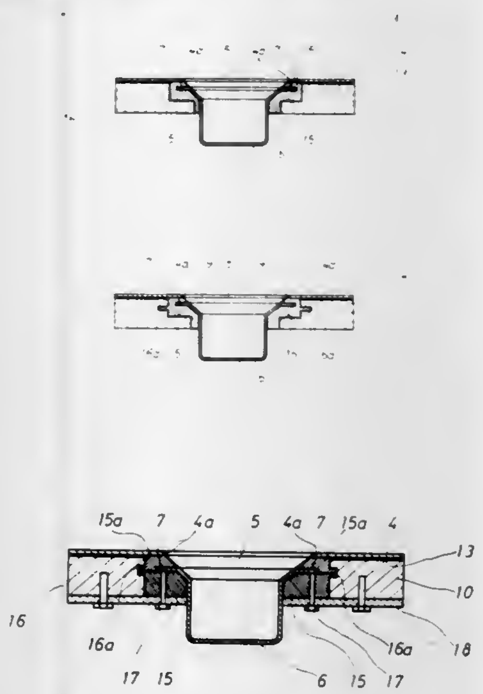

5. A process for producing a fixture top fitted with a basin, said process comprising the steps of:
applying and curing a synthetic resin on a portion of the bottom surface of a decorative board so as to form a reinforcing resin layer;
positioning a flange of said basin on said reinforcing resin layer and spaced from said decorative board;
bonding a core of a wood derived material to another portion of said bottom surface of said decorative board, said core including a cavity at said layer and said basin;
filling the portion of said cavity between said core and said basin with additional synthetic resin; and
curing said additional resin,
whereby said basin is entirely embedded in said resin and is integrated with said core.

4,374,696
METHOD OF HEAT-SEALING SUBSTRATES
Helmut Schmidt, Höchberg; Gerhard Tünker, and Horst Scholze, both of Würzburg, all of Fed. Rep. of Germany, assignors to Fraunhofer-Gesellschaft, Munich, Fed. Rep. of Germany
Filed Mar. 20, 1981, Ser. No. 246,111
Claims priority, application Fed. Rep. of Germany, Mar. 26, 1980, 3011761
Int. Cl.[3] C09J *3/00;* B32B *9/00, 17/06*
U.S. Cl. 156—329 39 Claims

1. A method for heat-sealing a first glass substrate to a second substrate, comprising the steps of:
applying to said glass substrate or to said second substrate, without previously coating said glass substrate with an adhesion promoter, a heat sealing adhesive consisting essentially of a thermoplastic heteropolycondensate prepared by hydrolysis of and polycondensation of:
(a) 20 to 95% by weight of at least one organosilane of the general formula (I):

$$R_mSiX_{4-m} \quad \text{(I),}$$

wherein R is alkyl, alkenyl, aryl, alkylaryl, or arylalkyl; X is hydrogen, halogen, hydroxyl, alkoxy, acyloxy, or a group —NR'$_2$ wherein R' is hydrogen and/or alkyl; and m is an integer of 1, 2 or 3; with at least one of the following components (b), (c) and (d), the total concentration of components (b), (c) and (d) being at least 5% by weight:
(b) 0 to 40% by weight of one or more silicon-functional silanes of the general formula (II):

$$SiX_4 \quad \text{(II)}$$

wherein X is as defined above, with the proviso that not all of substituents X are hydrogen;
(c) 0 to 40% by weight of one or more substantially involatile oxides soluble in the reaction medium, or one or more compounds capable of forming such substantially involatile oxides, of an element selected from Groups Ia to Va or IVb and Vb of the Periodic Table; and
(d) 0 to 20% by weight of one or more organofunctional silanes of the general formula (III):

$$R_n(R''Y)_pSiX_{(4-n-p)} \quad \text{(III),}$$

wherein R and X are as defined above; R'' is straight chain or branched alkylene optionally interrupted by oxygen or sulfur atoms or —NH—groups, phenylene, alkylphenylene, or alkylenephenylene; Y is halogen, unsubstituted or substituted amino, unsubstituted or substituted anilino, aldehyde, keto, carboxyl, hydroxyl, mercapto, cyano, hydroxyphenyl, carboxylic acid alkyl ester, sulfonic acid, phosphoric acid, acryloxy, methacryloxy, glycidyloxy, epoxy, or vinyl; n is an integer of 0, 1 or 2; and p is an integer of 1, 2 or 3, the sum of n+p being an integer of 1, 2 or 3;
in the presence of at least the stoichiometric amount of water required for hydrolysis, and optionally in the presence of a condensation catalyst and/or solvent, wherein in the case of starting components (a) and (d), oligomers of these silanes which are soluble in the reaction medium may also be used; and heat sealing said glass substrate to said second substrate.

4,374,697
CONTAINER, AND METHOD AND DEVICE FOR MANUFACTURING THE SAME
Kiyoshi Tsuzuki; Sigeto Tanaka, both of Sagamihara, and Yoshiaki Take, Fujisawa, all of Japan, assignors to Toppan Printing Co., Ltd., Tokyo, Japan
Filed Dec. 17, 1980, Ser. No. 217,217
Claims priority, application Japan, Dec. 26, 1979, 54-169600; Dec. 26, 1979, 54-169601; Dec. 26, 1979, 54-169602; Dec. 26, 1979, 54-180535
Int. Cl.[3] B29C *27/08*
U.S. Cl. 156—580.2 6 Claims

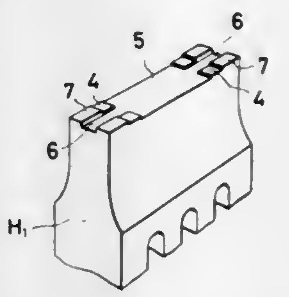

1. A device for forming the body and bottom of a container of the kind wherein there is an axial seam formed by adhesively-joined overlapping portions of the side and a bottom formed by an upwardly-folded lower end portion of the bottom adhesively enfolded with a downwardly-folded portion of the lower end of the side, said device comprising an ultrasonic side seaming device for welding the side seam, said side seaming device embodying an elongate, ultrasonic horn and means therein defining a planar contact surface containing a stepped-down recess commencing several millimeters from one end for engagement with the side seam and a bottom seaming device comprising an outer mold containing a mold cavity for receiving the bottom, said outer mold containing a centrally-located circular hole, a shaft, a knurling tool supported by the shaft within the mold cavity for rotation about its axis and movement circumferentially within the hole and means circumferentially of the knurling tool defining a circumferential wall and an annular groove of such radial dimensions as to have rolling tangential engagement with the enfolded portion of the body and bottom when moved circumferentially within the hole to cause the enfolded portion to become adhered.

4,374,698
METHOD OF MANUFACTURING A SEMICONDUCTOR DEVICE
Jozef A. M. Sanders, Sunnyvale, Calif.; Franciscus H. M. Sanders; Hendrikus Kalter, both of Eindhoven, Netherlands, and Everhardus P. G. T. van de Ven, Sunnyvale, Calif., assignors to U.S. Philips Corporation, New York, N.Y.
Filed Jul. 9, 1981, Ser. No. 281,757
Claims priority, application Netherlands, Jul. 11, 1980, 8004005
Int. Cl.[3] B44C *1/22;* C03C *15/00, 25/06*
U.S. Cl. 156—643 11 Claims

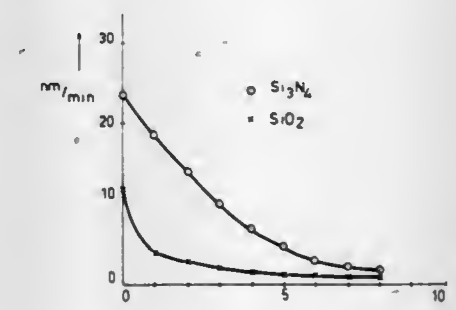

1. A method of manufacturing a semiconductor device com-

prising etching a layer of silicon nitride which is present on a substrate by bringing the layer into contact with constituents of a plasma formed in a gas mixture which contains a fluoride compound and an oxygen compound, characterized in that from 1 to 15% by volume of a gaseous compound which contains a halogen other than fluoride is added to the gas mixture.

4,374,699

METHOD OF MANUFACTURING A SEMICONDUCTOR DEVICE

Jozef A. M. Sanders, Sunnyvale, Calif., and Franciscus H. M. Sanders, Eindhoven, Netherlands, assignors to U.S. Philips Corporation, New York, N.Y.

Filed Jul. 9, 1981, Ser. No. 281,759

Claims priority, application Netherlands, Jul. 11, 1980, 8004008

Int. Cl.³ B44C *1/22;* **C03C** *15/00, 25/06*

U.S. Cl. 156—643 4 Claims

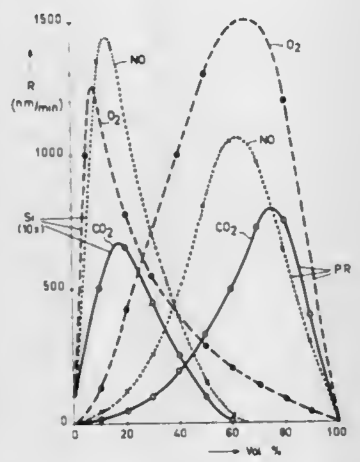

1. In a method of manufacturing a semiconductor device having an organic lacquer layer locally present on a substrate comprising plasma etching said layer with a gas mixture containing a halogen compound and an oxygen compound representing more than 25% by volume of said gas mixture, the improvement comprising forming said oxygen compound from the group NO and CO_2.

4,374,700

METHOD OF MANUFACTURING SILICIDE CONTACTS FOR CMOS DEVICES

David B. Scott, Plano; Roderick D. Davies, Richardson, and Yee-Chaung See, Plano, all of Tex., assignors to Texas Instruments Incorporated, Dallas, Tex.

Filed May 29, 1981, Ser. No. 268,201

Int. Cl.³ H01L *21/308, 21/24, 21/283*

U.S. Cl. 156—656 10 Claims

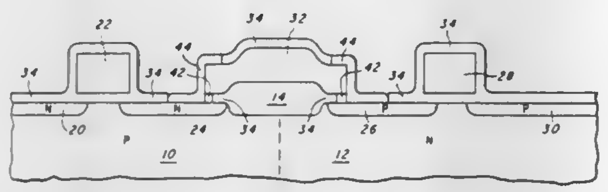

9. A process for forming contacts between gate-level polysilicon and a silicon substrate, comprising the steps of:
providing a silicon substrate;
providing an insulator layer on said substrate, said insulator layer comprising gate insulator areas, wherein the thickness of said insulator layer is less than 100 nm;
providing polysilicon on selected portions of said insulator layer;
etching regions of said gate insulator areas, adjacent to respective portions of said polysilicon, where said contacts are to be formed, said etching step also partially undercutting said portions of said polysilicon where said contacts are to be formed by eroding said insulator layer from beneath the perimeter of said polysilicon;
conformally depositing undoped polysilicon overall;
anisotropically etching said undoped polysilicon, so as to remove said undoped polysilicon except from said undercuts in said gate insulator layer; and
providing metal silicide on exposed areas of said substrate, said gate-level polysilicon, and said undoped polysilicon in said undercuts in said gate insulator areas, whereby silicide contacts are formed between said gate-level polysilicon and said respective exposed regions of said substrate.

10. The process of claim 9, wherein said step of providing silicide comprises:
depositing a metal overall;
applying heat, so that said metal reacts with said regions exposed by said first-mentioned etching step; and
etching away all unreacted portions of said metal.

4,374,701

CHEMICALLY POLISHED CERAMIC BODY

Raj N. Singh, Schenectady, N.Y., assignor to General Electric Company, Schenectady, N.Y.

Filed Aug. 3, 1981, Ser. No. 289,578

Int. Cl.³ B44C *1/22;* **C03C** *15/00, 25/06*

U.S. Cl. 156—667 12 Claims

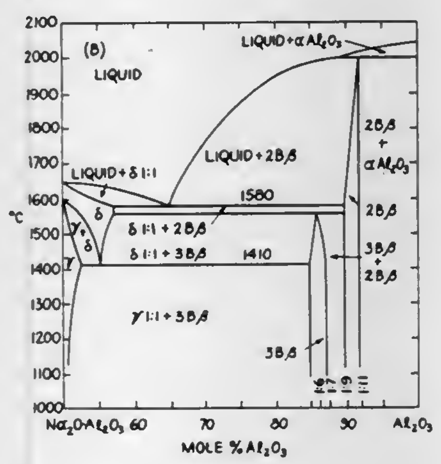

1. A process for producing a polished ceramic body which comprises providing a polycrystalline ceramic body, said ceramic body ranging in composition from an alkali metal beta-alumina phase to an alkali metal beta"-alumina phase including all combinations of said alkali metal beta-alumina phase and said alkali metal beta"-alumina phase, said alkali metal being selected from the group consisting of sodium, potassium, lithium, mixtures thereof, and alloys thereof, and polishing said ceramic body by contacting it with phosphoric acid at a temperature ranging from about 250° C. to about 350° C. to produce a ceramic body with a polished surface, said phosphoric acid having a concentration of P_2O_5 which polishes said ceramic body, said polishing having no significant deleterious effect on said ceramic body.

4,374,702

MICROFIBRILLATED CELLULOSE

Albin F. Turbak, Convent Station; Fred W. Snyder, Wharton, both of N.J., and Karen R. Sandberg, Shelton, Wash., assignors to International Telephone and Telegraph Corporation, New York, N.Y.

Continuation of Ser. No. 107,446, Dec. 26, 1979, abandoned. This application Oct. 22, 1981, Ser. No. 313,726

Int. Cl.³ D21D *1/20*

U.S. Cl. 162—100 11 Claims

1. A process for preparing microfibrillated cellulose comprising passing a liquid suspension of fibrous cellulose through a high pressure homogenizer having a small diameter orifice in which the suspension is subjected to a pressure drop of at least 3000 psi and a high velocity shearing action followed by a high velocity decelerating impact against a solid surface, repeating the passage of said suspension through the orifice until said cellulose suspension becomes a substantially stable suspension, said process converting said cellulose into microfibrillated cellulose without substantial chemical change of the cellulose starting material.

4,374,703

CONTROL SYSTEM FOR PAPERMAKING MACHINE HEADBOX

Louis Lebeau, and Guy Bornard, both of Saint-Ismier, France, assignors to Centre Technique de l'Industrie des Papiers, Cartons et Celluloses, Grenoble, France

Continuation of Ser. No. 52,216, Jun. 26, 1979, abandoned. This application Jan. 8, 1981, Ser. No. 223,564

Claims priority, application France, Jun. 30, 1978, 78 20428

Int. Cl.³ D21F *1/02, 1/06*

U.S. Cl. 162—253 12 Claims

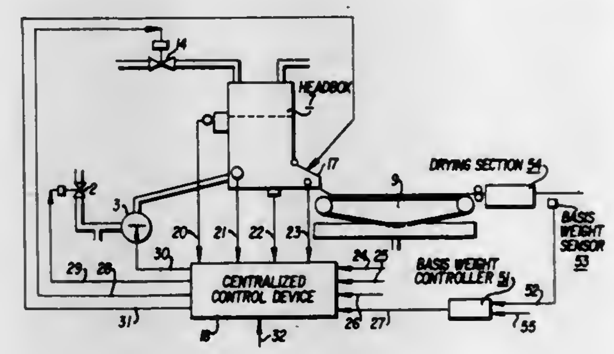

1. An apparatus for controlling a paper machine headbox comprising:
four sensors for directly measuring respective parameters of a paper making process and the disturbance to said parameters caused by operation of said machine, said sensors respectively directly measuring the pulp concentration in the headbox, the pulp level in the headbox, the total pressure in the headbox and a slice opening of the headbox;
at least three actuators having inputs for controlling respective operative devices which affect said measured parameters of the process;
a multivariable control system for receiving output signals from said four sensors and set point values for said measured parameters and supplying control signals to said at least three actuators, said control system comprising:
first means providing a model of said process, said first means receiving setting signals which are applied to said at least three actuators and supplying first parameter output signals representing the interrelationship of said measured parameters with respect to actuator settings as determined by said process model;
second means in parallel with said first means and providing a measurable disturbance model relating to said process, said second means receiving measured disturbance signals and supplying first parameter disturbance signals representing the interrelationship of parameter disturbances with respect to measured disturbances as determined by said disturbance model;
third means providing a regulation reference model relating to said process, said third means being responsive to output signals from said sensors and said first and second means and providing output signals for eliminating said measured disturbances as determined by said regulation reference model; and,
fourth means providing a tracking reference model relating to said process, said fourth means receiving set point values for said measured parameters and providing therefrom output signals representing desired values of said measured parameters of said process as determined by said tracking reference model;
said control system providing individual control signals to said actuators in response to said sensor signals and the output signals of said first, second, third and fourth means for controlling at least one parameter of said process in direct response to a variation in said parameter from a disturbance, set point change, or both, by altering the inputs to said actuators, while minimizing the effects on the remainings parameters of said process.

4,374,704

APPARATUS FOR PYROLYSIS OF HYDROCARBON BEARING MATERIALS

William P. Young, 419 S. Edgewood Ave., La Grange, Ill. 60525

Division of Ser. No. 936,367, Aug. 24, 1978, abandoned, which is a continuation of Ser. No. 822,444, Aug. 8, 1977, abandoned. This application Nov. 4, 1980, Ser. No. 203,863

Int. Cl.³ C10B *1/08, 1/10, 43/04*

U.S. Cl. 202—117 7 Claims

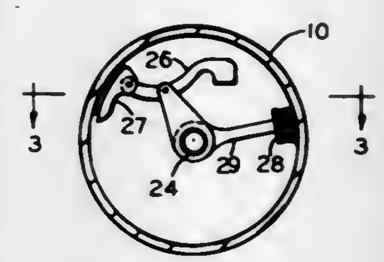

1. Apparatus for the pyrolysis of hydrocarbon bearing materials comprising: a rotary kiln the axis of which is inclined with respect to the horizontal, means for introducing said material into an upper portion of said kiln, means for rotating said kiln about its axis to cause said material to move within said kiln from its point of introduction toward a lower portion of said kiln, means for heating said material through the walls of said kiln as said kiln rotates and as said material moves within the kiln to a temperature at which a portion of said material is volatile, the lower portion of said kiln having an opening therein through which material may pass out of said kiln, a stationary supporting structure within said kiln, a scraping shoe, and a lever pivotally attached to said structure, said lever being at its one end pivotally connected to said shoe and weighted at its other end, the weight of said weighted end urging said shoe against the wall of said kiln.

4,374,705

DISTILLATION FOR ALCOHOL

Kiyoshi Sawai, Chibashi, and Takao Kawase, Ichiharashi, both of Japan, assignors to Chisso Engineering Co. Ltd., Tokyo, Japan

Filed Feb. 6, 1981, Ser. No. 232,307

Claims priority, application Japan, Feb. 8, 1980, 55-14602

Int. Cl.³ B01D *1/28*

U.S. Cl. 203—19 4 Claims

1. A process for the distillation of alcohol from a glue-like raw alcohol containing solution which comprises:
providing a distillation equipment comprising:
first concentrating column means to generate alcohol vapor from glue-like raw alcohol containing liquid;
second concentrating column means to concentrate alcohol vapor generated in the first concentrating column means;
compressor means to compress the alcohol vapor generated in the second concentrating column means to a vapor having a temperature of about 118° C. and a pressure of 3–5 atm/G.;
water evaporator means to generate steam having a temperature of about 106° C. and a pressure of 0.3 atm/G.

by heat exchanging of water with the alcohol vapor compressed in the compressor means;
said first concentrating column means having a raw alcohol containing liquid introducing pipe, a distillation residue discharging pipe and a steam inlet pipe;
an alcohol vapor conducting pipe and a refluxing liquid conducting pipe each being operatively connected between said first concentrating column means and said second concentrating column means;
an alcohol vapor conducting pipe operatively connected between the second concentrating column means and the compressor means;
a compressed alcohol vapor conducting pipe operatively connected between the compressor means and the water evaporator means;

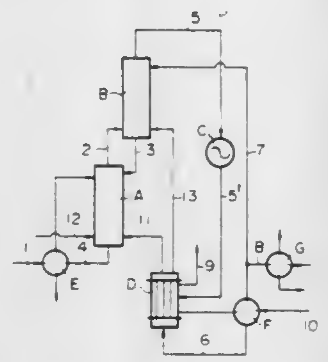

a steam blowing pipe operatively connected between the water evaporator means and the first concentrating column means;
a steam blowing pipe and an alcohol supplying reflux pipe each operatively connected between the evaporator means and the second concentrating column means;
an exhaust gas pipe and a water supplying pipe each operatively connected to the water evaporator means; and
an alcohol removing branched pipe operatively connected to the alcohol supplying pipe;
feeding the glue-like raw alcohol containing solution to said first concentrating column means; and
recovering 94.5 weight % of alcohol through said alcohol removing branched pipe.

4,374,706
PROCESS FOR THE PURIFICATION OF PHOSPHORUS PENTASULPHIDE BY DISTILLATION UNDER VACUUM
Pietro Molla, Milan, Italy, assignor to Saffa S.p.A., Milan, Italy
Continuation-in-part of Ser. No. 902,743, May 3, 1978, abandoned. This application Mar. 2, 1981, Ser. No. 238,159
Claims priority, application Italy, May 20, 1977, 23796 A/77
Int. Cl.³ B01D *3/10*
U.S. Cl. 203—91 **3 Claims**

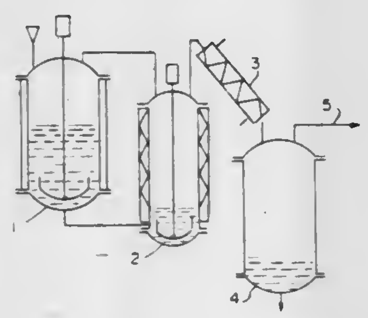

1. Process for the purification of phosphorous pentasulfide by means of distillation in which the phosphorous pentasulfide is liquified by heating at a temperature below its boiling point temperature, the liquified phosphorous pentasulfide is evaporated under reduced pressure at a temperature between 365° and 380° C., and the vapors of phosphorous pentasulfide are condensed by cooling, characterized in that the liquification, evaporation and condensation of the phosphorous pentasulfide are carried out at a residual pressure of about 6 mmHg, and the phosphorous pentasulfide both prior to and after the evaporation is heated and cooled respectively at a temperature between 315° and 350° C.

4,374,707
ORIFICE PLATE FOR INK JET PRINTING MACHINES
Joel M. Pollack, Rochester, N.Y., assignor to Xerox Corporation, Stamford, Conn.
Filed Mar. 19, 1981, Ser. No. 245,422
Int. Cl.³ C25D *1/08, 1/20*
U.S. Cl. 204—11 **15 Claims**

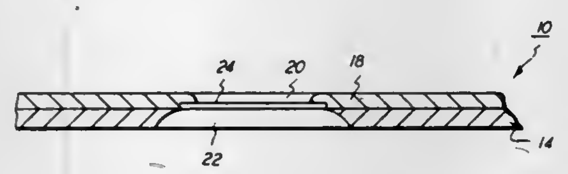

1. A method of producing an orifice plate for use in an ink jet printing system, including the steps of:
providing a thin substrate attached to a thick support;
forming a pattern of electrically insulated areas on the surface of the substrate opposed to the support;
electroplating the uninsulated areas of the surface of the substrate opposed to the support;
separating the substrate from the support;
forming a pattern of chemically resistant areas on the nonelectroplated surface of the substrate to protect selected areas thereof; and
dissolving the non-protected areas of the substrate to produce an orifice plate.

4,374,708
FINE LINE CIRCUITRY PROBES AND METHOD OF MANUFACTURE
William P. Dugan, Pomona, Calif., assignor to General Dynamics, Pomona Division, Pomona, Calif.
Division of Ser. No. 125,814, Feb. 28, 1980. This application Jul. 2, 1981, Ser. No. 279,888
Int. Cl.³ C25D *1/08, 5/02, 5/54*
U.S. Cl. 204—11 **3 Claims**

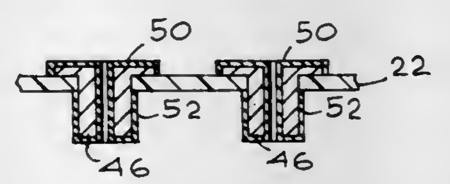

1. A method of producing a microcircuit probe containing testing board comprising:
laminating and adhering together a board and a dielectric layer with a mandrel sandwiched between them, said mandrel being a thickness equivalent to the desired probe height;
providing a plurality of holes through said board, mandrel and layer for locating said probes;
cladding said board, said layer and said holes with a conductive metal;
electroplating the structure with the metal which is to constitute said probes to form thick-walled cylinders of said metal in said holes;
removing plated metal from the exterior surfaces of the structure while leaving the metal in said holes;
masking the surface of said board in a selected circuit pattern;
etching the unmasked portions of said board to remove exposed cladding;

removing said mask and exposing the remaining cladding;
removing all material, including the dielectric layer, along the surface of the mandrel remote from the board;
removing said mandrel without disturbing the probe metal or the board; and
providing a solder surface on the probes produced thereby.

4,374,709
PROCESS FOR PLATING POLYMERIC SUBSTRATES
Daniel J. Combs, Sterling Heights, Mich., assignor to Occidental Chemical Corporation, Warren, Mich.
Filed May 1, 1980, Ser. No. 145,534
Int. Cl.³ C25D *5/56*
U.S. Cl. 204—30 **20 Claims**

1. A process for pretreating a substantially non-conductive substrate to render it receptive to subsequent electroplating operations which comprises the steps of contacting a substrate with a dilute aqueous conditioning solution containing controlled effective amounts of copper ions, acid and a bath soluble polyether compound for a period of time to effect an immersion deposit of copper on the substate and reduce the resistivity thereof, and thereafter electrolytically depositing on the conditioned substrate a copper strike employing an aqueous acidic electrolyte containing copper ions, acid and a bath soluble polyether compound present in amounts effective to deposit a uniform, adherent and conductive copper strike on the substrate.

4,374,710
ELECTROLYTIC GRAINING OF ALUMINUM WITH NITRIC AND OXALIC ACIDS
John E. Walls, Annandale, N.J., assignor to American Hoechst Corporation, Somerville, N.J.
Filed Mar. 18, 1982, Ser. No. 359,338
Int. Cl.³ C25F *3/04*
U.S. Cl. 204—33 **13 Claims**

1. A method of treating the surface of a sheet of aluminum or the alloys thereof which comprises electrolytically graining said sheet under electrolyzing conditions in an aqueous solution of nitric acid and oxalic acid in a sufficient concentration and for a sufficient length of time to provide a finely grained surface topography to said sheet.

4,374,711
PROCESS FOR THE ELECTROLYSIS OF AN AQUEOUS SODIUM CHLORIDE SOLUTION COMPRISING, IN COMBINATION, A DIAPHRAGM PROCESS AND A CATION EXCHANGE MEMBRANE PROCESS
Shinsaku Ogawa, Nobeoka, Japan, assignor to Asahi Kasei Kogyo Kabushiki Kaisha, Osaka, Japan
Filed Jan. 30, 1981, Ser. No. 229,842
Claims priority, application Japan, Jan. 30, 1980, 55-8715
Int. Cl.³ C25B *1/34*
U.S. Cl. 204—98 **6 Claims**

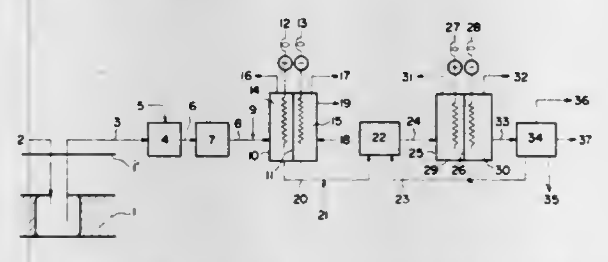

1. A process for the electrolysis of an aqueous sodium chloride solution comprising, in combination, a diaphragm process in which sodium chloride contained in the catholyte is crystallization-separated by means of a crystallizer used in the diaphragm process and a cation exchange membrane process in which a weak saline solution is taken out of an anode chamber of an electrolytic cell for the cation exchange membrane process, characterized in that the sodium chloride obtained from said crystallizer is dissolved in the weak saline solution taken out of said anode chamber and the resulting saline solution is supplied into an anode chamber of an electrolytic cell for the diaphragm process.

4,374,712
CATHODE FOR CHLOR-ALKALI CELLS
Thomas J. Gray, Guilford, Conn., assignor to Olin Corporation, New Haven, Conn.
Continuation-in-part of Ser. No. 80,745, Oct. 1, 1979, which is a continuation-in-part of Ser. No. 25,153, Mar. 29, 1979, Pat. No. 4,240,895. This application Sep. 14, 1981, Ser. No. 301,681
Int. Cl.³ C25B *1/34, 11/06*
U.S. Cl. 204—98 **16 Claims**

1. In an electrolytic cell useful for the electrolysis of brine to produce chlorine and an alkali metal hydroxide, said cell being comprised of an anode, a cathode, and a cationic exchange separator positioned between said anode and cathode, characterized by the improvement which comprises employing as said cathode a conductive metal core having a Raney metal surface predominantly derived from an integral Beta structured $(Ni_xMo_yTi_z)Al_3$ quaternary intermetallic crystalline precursory outer surface which adheres to said metal core, where x is less than 94, y is within the range from about 5 to about 20 and z is within the range from 1 to about 5 weight percent of the Ni-Mo-Ti molecular portion.

4,374,713
PROCESS FOR SEPARATING TUNGSTEN FROM COINAGE METALS
Samuel Natansohn, Sharon, and Gary Czupryna, Salem, both of Mass., assignors to GTE Laboratories Incorporated, Waltham, Mass.
Filed Jun. 1, 1981, Ser. No. 269,191
Int. Cl.³ C25C *1/08, 1/20*
U.S. Cl. 204—109 **8 Claims**

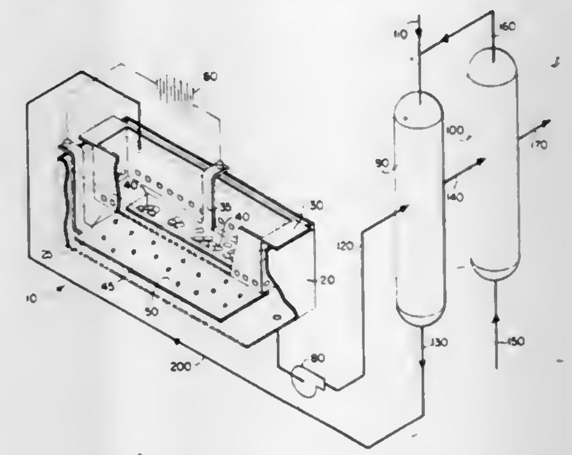

1. A process for separately recovering tungsten and a coinage metal from alloys or mixtures thereof comprising electrowinning said coinage metal from an aqueous nitrate electrolyte solution contained in an electrowinning cell having an anode, comprising said alloy or mixture of tungsten and a coinage metal, and a cathode; wherein the electrolyte solution is maintained essentially free of dissolved tungsten by contacting, in a chamber separate from said electrowinning cell, said electrolyte solution with an organic extractant solution comprising an inert solvent and a quaternary alkylammonium salt or a quaternary alkylphosphonium salt to selectively remove a portion of the tungsten from said electrolyte solution and to deposit said coinage metal at the cathode of said electrowinning cell in a form substantially free of tungsten contamination; and separately recovering said selectively removed portion of tungsten from said organic extractant solution.

4,374,714

PROCESS FOR THE PRESERVATION OF COLOR AND FLAVOR IN LIQUID CONTAINING COMESTIBLES

Ihab M. Hekal, Stamford, Conn., assignor to Continental Packaging Company, Inc., Stamford, Conn.

Filed Mar. 15, 1982, Ser. No. 357,969

Int. Cl.³ C25B *3/04;* **A23L** *1/00, 3/32*

U.S. Cl. 204—131 **11 Claims**

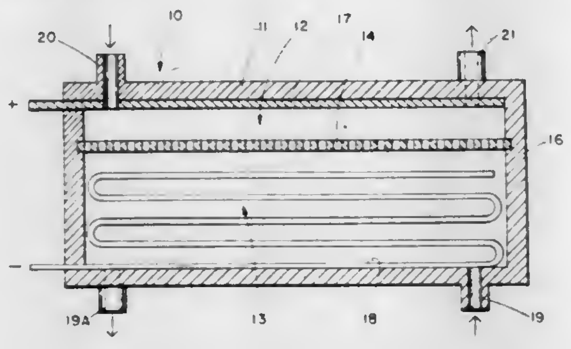

1. A method of treating liquid comestibles having oxygen dissolved or occluded therein to reduce the oxygen content thereof which comprises introducing the liquid containing comestible and an electrolyte solution separately through separate compartments of an electrolytic cell having a first compartment containing an anode and a second compartment containing a cathode, the compartments being separated by a cation permeable membrane, the comestible being introduced into the cathode compartment and the electrolyte solution being introduced into the anode compartment, the electrolyte being a highly dissociatable, non-oxidizable, inorganic acid, applying an electric current between the anode and cathode which flows at a density within the range of about 0.002 to about 10 amperes per square inch, maintaining the comestible in the cathode compartment for a time sufficient to deoxidize and effect removal of the oxygen therefrom but insufficient to effect any substantial chemical change in the comestible and then discharging the deoxidized comestible from the cathode compartment.

4,374,715

METHOD FOR THE PREPARATION OF POLY (CARBONOYL FLUORIDE) OLIGOMERS

Keith B. Baucom, Gainesville, and Burrell N. Hamon, Starke, both of Fla., assignors to The United States of America as represented by the Secretary of the Air Force, Washington, D.C.

Filed Jun. 17, 1981, Ser. No. 274,697

Int. Cl.³ B01J *19/12*

U.S. Cl. 204—158 R **2 Claims**

1. In a method for preparing poly (carbonyl fluoride) oligomers comprising the steps of introducing a reaction mixture of F-3-methylbutene-1 and oxygen into an evacuated reaction vessel; subjecting said reaction mixture to a source of ultraviolet radiation for a period of time sufficent to effect a photolytic reaction between the components of said mixture; and separating the resulting reaction products; the improvement which comprises the addition of a minor amount of bis(trifluoromethyl)trioxide to said reaction mixture as a reaction initiator.

4,374,716

NOVEL AMORPHOUS AROMATIC POLYESTER MODIFIED WITH AMINE AND UV CURABLE COMPOSITION CONTAINING THE SAME

James G. Pacifici, Batesville, Ark.; Gordon C. Newland, and Howard G. Moore, both of Kingsport, Tenn., assignors to Eastman Kodak Company, Rochester, N.Y.

Filed Aug. 6, 1981, Ser. No. 290,460

Int. Cl.³ C08G *18/00, 63/00, 69/00*

U.S. Cl. 204—159.19 **11 Claims**

1. A radiation-curable composition comprising

A. about 4.5 to 49.5 percent by weight of a linear amorphous aromatic polyester derived from (i) terephthalic acid, (ii) 1,2-propanediol or mixtures of 1,2-propanediol with up to 20 mole percent of ethylene glycol, based upon the total of 1,2-propanediol and ethylene glycol, and (iii) about 5 to 30 mole percent, based upon the total of (i), (ii), and (iii), of a glycol which contains a tertiary amine group, said glycol having the general formula

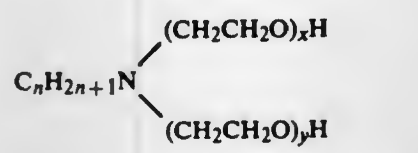

where n is an integer within the range of 1 to 20 and each of x and y is independently an integer within the range of 1 to 30 with the sum of x+y being less than or equal to 60, or the general formula

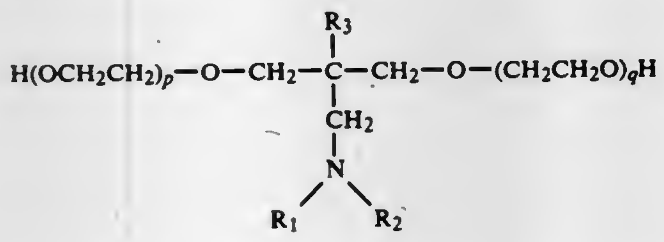

where each of p and q is independently 0 or a positive integer not greater than 10, and where R_1 and R_2 are lower alkyl groups and can be the same or different and R_3 is a lower alkyl group or a group of the formula

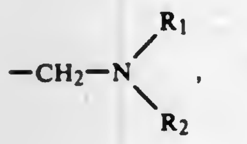

said polyester having an inherent viscosity of about 0.05 to 0.5 dl/g when measured in 60:40 phenol:tetrachloroethane at a concentration of 0.5 g/100 ml at 25° C.

B. about 50 to 95 percent by weight of a photopolymerizable or photocrosslinkable ethylenically unsaturated compound; and

C. about 0.5 to 25 percent by weight of a photoinitiator selected from the group consisting of benzil, lower alkyl substituted benzil, benzoin ethers, haloalkyl ketones, aromatic ketones, lower alkyl substituted aromatic ketones, aromatic ketones in combination with amines, and mixtures thereof.

4,374,717

PLASMA POLYMERIZED INTERFACIAL COATINGS FOR IMPROVED ADHESION OF SPUTTERED BRIGHT METAL ON PLASTIC

Edmund Drauglis, Columbus; Roy F. Wielonski, Worthington, and Francis A. Sliemers, Columbus, all of Ohio, assignors to General Motors Corporation, Detroit, Mich.

Filed Nov. 5, 1981, Ser. No. 318,634

Int. Cl.³ C23C *15/00;* **B32B** *15/08;* **B05D** *1/36*

U.S. Cl. 204—192 C **2 Claims**

1. A method of improving adhesion between layers of a thermoplastic urethane article sputtered with a bright metal coating comprised of chromium metal and having a clear protective urethane overcoating comprising:

providing a clean sputtering surface on a said thermoplastic urethane article;

exposing said surface to a radio frequency induced plasma of acetonitrile monomer such that a coherent thin coating layer of polymerized acetonitrile is formed thereon;

sputtering said article with a bright metal coating layer containing chromium metal;

exposing said metal coating layer to a second radio frequency induced plasma of acetonitrile to form a second coherent thin coating layer of polymerized acetonitrile thereon; and

covering said second polymerized acetonitrile layer with a clear compatible, protective layer comprised of polymeric urethane.

4,374,718

ELECTROLYTIC CELL

John H. Miles, Ravenna, Ohio, assignor to Wean United, Inc.

Filed May 8, 1981, Ser. No. 261,997

Int. Cl.³ C25D *17/00*

U.S. Cl. 204—202 **9 Claims**

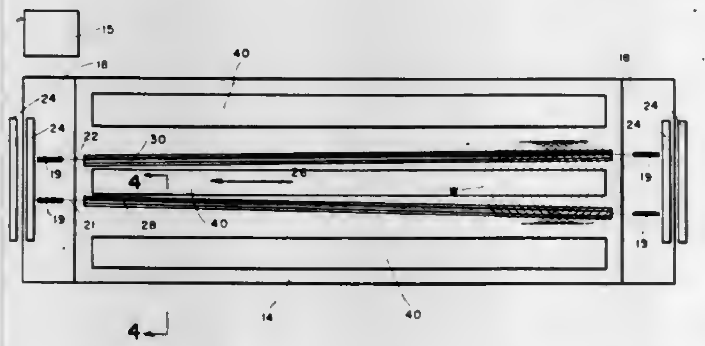

1. An electrolytic cell for processing in a generally horizontal path material such as wire, rod or bar stock while passing through the electrolytic cell comprising:

a receptacle,

a conveying means for receiving and supporting said material while passing through said receptacle,

said conveying means including a continuous electrically charged chain means,

said chain means being made up of members that support the said material during its travel through said receptacle.

4,374,719

SYSTEM FOR ELECTROLYTIC CLEANING OF METAL WIRE IN LOOP FORM

Frank W. Bakewell, Washington Township, Westmoreland County, and Charles D. Stricker, Monroeville Borough, both of Pa., assignors to United States Steel Corporation, Pittsburgh, Pa.

Filed Mar. 19, 1982, Ser. No. 359,729

Int. Cl.³ C25D *17/00*

U.S. Cl. 204—202 **5 Claims**

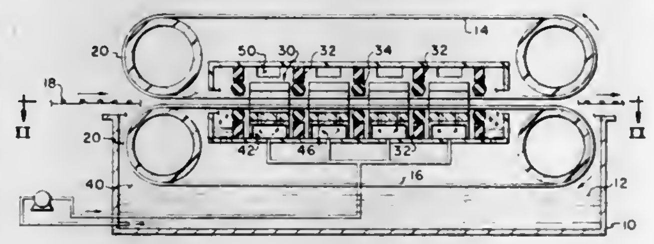

1. A system for electrolytically cleaning metal wire, said system comprising:

a container for holding an electrolyte, means for conveying the wire through the electrolyte on a generally horizontal passline,

the wire being arranged in overlapped, non-concentric loops of about the same diameter lying flat in the passline direction,

a plurality of elongated electrodes mounted in the container so as to extend lengthwise in generally transverse relation with respect to the passline, said electrodes being arranged in tandem in the passline direction and being adapted to be connected to a supply of electric current such that adjacent ones thereof are of opposite polarity, and

a plurality of non-conductive barriers for electrically separating each adjacent pair of said electrodes,

said electrodes including a planar first portion extending lengthwise fully across said loops on one side thereof and a pair of wrap-around second portions joined to each of the opposed narrow ends of the first portion, said wrap-around second portions each including at least a generally vertical leg extending along the outer edges of the wire loops, said second portions each providing an additional electrode area, within the outer one-sixth (1/6) of the loops as measured in a transverse direction normal to the passline, of from 5 to 35 percent of the area of said first electrode portion,

the first and second electrode portions providing an electrode-to-wire spacing within the range of about 0.5 to about 2.0 inches,

whereby, the wire loops are more effectively cleaned at the outer edges thereof.

4,374,720

SYNTHESIS OF WATER SOLUBLE CROSS-LINKERS AND THEIR USE IN THE MANUFACTURE OF ANIONIC POLYMERS

Russell J. MacDonald, Woburn, Mass., assignor to Ionics, Incorporated, Watertown, Mass.

Division of Ser. No. 217,494, Dec. 13, 1980, Pat. No. 4,310,631, which is a division of Ser. No. 84,337, Oct. 12, 1979, Pat. No. 4,275,227. This application Aug. 21, 1981, Ser. No. 295,161

Int. Cl.³ B01J *41/04;* **C07C** *67/26;* **C08F** *18/22*

U.S. Cl. 204—252 **7 Claims**

1. A homopolymer of a water soluble, ionic, cross-linking bifunctional monomer of the formula:

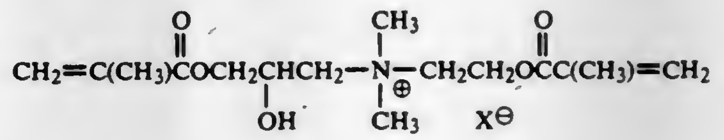

where X represents a univalent anion of an acid.

3. The method of preparing a water soluble compound of the formula of claim 1 comprising reacting a liquid mixture of glycidyl methacrylate, dimethylaminoethyl methacrylate and a water solution of an acid.

4,374,721

ROLL HAVING LOW VOLUME RESISTIVITY FOR ELECTROPLATING

Yoshio Hara, Zama, and Yoshiaki Hashimoto, Kisarazu, both of Japan, assignors to Mitsubishi Steel Mfg. Co., Ltd. and Nippon Steel Corporation, both of, Japan

Filed Sep. 25, 1981, Ser. No. 305,398

Claims priority, application Japan, Sep. 29, 1980, 55-134399

Int. Cl.³ C25D *17/10*

U.S. Cl. 204—293 **2 Claims**

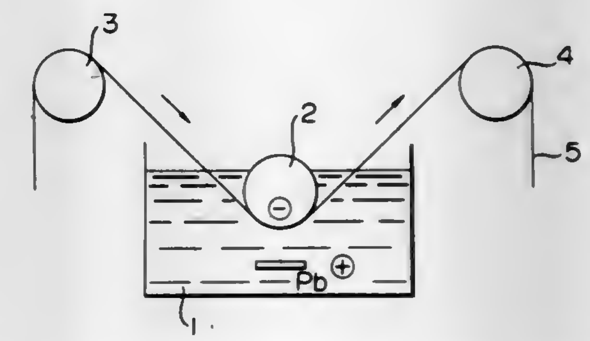

1. A roll for electroplating having low volume resistivity consisting essentially of, in weight %, below 0.1%C, below

1.5%Si, below 1.5%Mn, 14% to 21%Cr, 13% to 20%Mo, below 6%Fe, and the balance substantially Ni.

4,374,722
CATHODIC SPUTTERING TARGET INCLUDING MEANS FOR DETECTING TARGET PIERCING
Bogdan Zega, Geneva, Switzerland, assignor to Battelle Development Corporation, Columbus, Ohio
Filed Aug. 6, 1981, Ser. No. 290,425
Claims priority, application European Pat. Off., Aug. 8, 1980, 80200752.6
Int. Cl.³ C23C *15/00*
U.S. Cl. 204—298 **10 Claims**

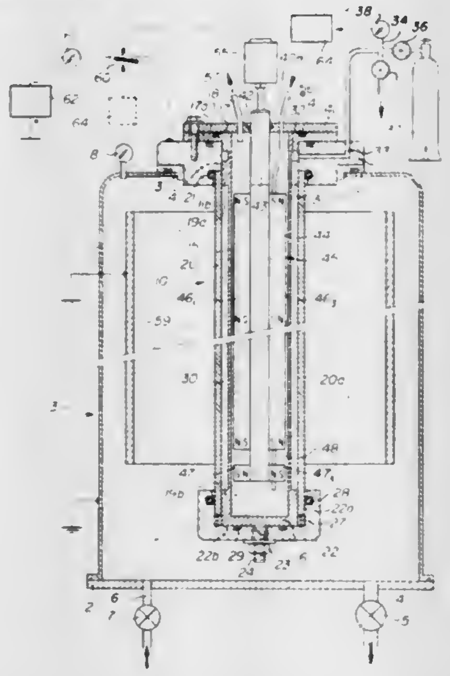

1. An improved sputtering cathode for a high rate sputtering apparatus for substrate coating, adapted to be located inside an evacuable sealed enclosure, the cathode having means for target cooling during sputtering and means for enhancing the sputtering rate, the target having a sputtering face of a material to be sputtered and a back face opposed to the sputtering face, wherein the improvement comprises:

a first, thin gas tight chamber formed by the back face of the target and an intermediate support, adapted to have a gas of high thermal conductivity therein;

a second, fluid tight chamber formed in part by the intermediate support, adapted to have a liquid coolant circulating therein; and

a means for detecting the escape of the gas of high thermal conductivity from the first chamber.

4,374,723
APPARATUS FOR ELECTROPHORESIS
Olof A. Y. Vesterberg, Saltsjö-Duvnäs, Sweden, assignor to C. Desaga GmbH Nachf. Erich Fecht, Heidelberg, Fed. Rep. of Germany
Division of Ser. No. 94,308, Nov. 13, 1979, Pat. No. 4,337,131. This application Mar. 11, 1981, Ser. No. 242,680
Claims priority, application Sweden, Nov. 13, 1978, 78117207; Fed. Rep. of Germany, Nov. 2, 1979, 2944127
Int. Cl.³ B01D *13/02*
U.S. Cl. 204—299 R **7 Claims**

1. In an apparatus for conducting an electrophoretic process for the investigation, analysis and/or production of chemical substances which apparatus comprises channels adapted to contain a gel carrier medium, the opposite ends of said channels being in contact with electrode vessels adapted to contain buffer solution, said vessels being connected to opposite poles of a direct current source, the improvement wherein the apparatus contains a support plate which has elongated, essentially parallel troughs, slots, grooves or the like constituting the said channels which are designed to hold strips of the said gel carrier medium and which channels are sealable by applying at least one plate-like, film-like or foil-like element to the corre-

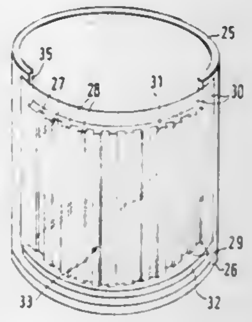

sponding flat side of the said support plate at its exposed longitudinal side, whereby, if desired, end regions at the top and bottom may be left exposed.

4,374,724
PLURAL STAGE DESALTING/DEHYDRATING APPARATUS
James R. Robinson, Houston, Tex., assignor to Petrolite Corporation, St. Louis, Mo.
Filed Sep. 15, 1980, Ser. No. 187,282
Int. Cl.³ C10G *33/02;* **B01D** *17/06*
U.S. Cl. 204—302 **6 Claims**

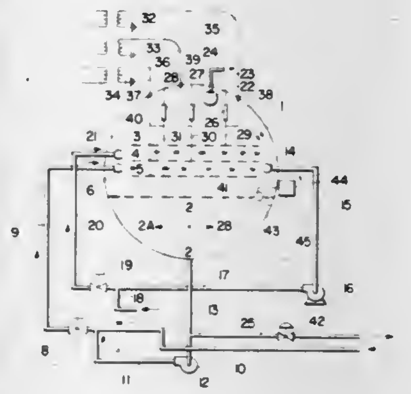

1. An apparatus for desalting oil-continuous oil-water emulsions, said apparatus comprising a closed horizontally disposed vessel, generally cylindrical in form, which is provided therein with two hydraulically substantially independent coalescing stages, there being contained within said closed vessel: three horizontally disposed permeable planar electrodes in vertically spaced relationship, each said electrode extending substantially the entire length and width of said vessel; first stage distributor means and conduit means for supplying oil-water emulsion to said first stage distributor means, said first stage distributor means extending longitudinally along one side of said vessel; collector means extending longitudinally along the opposing side of said vessel opposite said first stage distributor means; said first stage distributor means and said collector means being adapted to cause said emulsion to flow in a first stage treatment transversely from said one side to said opposing side of said vessel between the bottom and middle electrodes to form a first stage product; second stage distributor means and conduit means for supplying a second stage oil-water emulsion to said second stage distributor means; said second stage distributor means extending longitudinally along said one side of said vessel and adapted to cause said emulsion to flow transversely in a second stage treatment to the opposite side of said vessel between the top and middle electrode; product collector means and outlet means in the upper portion of said vessel; said permeable electrodes and the vessel interior being adapted and arranged to permit water to pass downwardly through said electrodes to the lower portion of said vessel; water withdrawal means in the lower portion of said vessel; first stage mixing means, conduit means for supplying oil feed and water to said mixing means, said first stage mixing means being

adapted to supply oil-water emulsion to said conduit means for supplying oil-water emulsion to said first stage distributor means; second stage mixing means, pumping and conduit means for withdrawing said first stage product from the first stage collector means and passing it to said second stage mixing means; conduit means for supplying water to said second stage mixing means, said second stage mixing means adapted to supply second stage oil-water emulsion to said conduit means for supplying said second stage emulsion to said second stage distributor means.

4,374,725
PROCESS FOR COAL LIQUEFACTION
Darrell D. Whitehurst, Titusville; Thomas O. Mitchell, Trenton, and Malvina Farcasiu, Princeton, all of N.J., assignors to Electric Power Research Institute, Palo Alto, Calif.
Filed May 8, 1978, Ser. No. 903,912
Claims priority, application United Kingdom, Jun. 8, 1977, 23952/77
Int. Cl.³ C10G *1/00*
U.S. Cl. 208—8 LE **6 Claims**

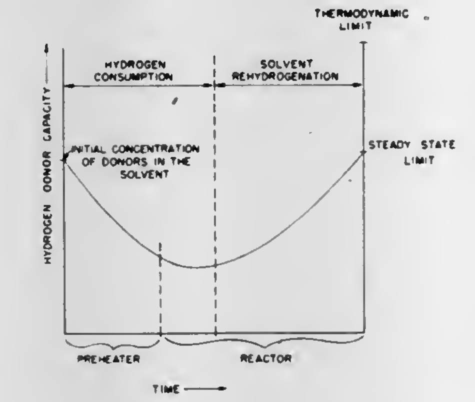

1. In a process for solvent refining coal by heating a mixture of comminuted coal and a steady state recycle solvent containing hydrogen donor components and derived as hereinafter recited, maintaining the said mixture under hydrogen pressure at reaction conditions for solubilization of coal components, separating undissolved solids from the resultant reaction products and separating solvent refined coal product from a recycle solvent fraction boiling in the range of about 190° C. to about 500° C. for mixture with coal as aforesaid; the improvement for control of the degree of hydrogen donor components in said recycle solvent which comprises separating from the said reaction products a fraction containing the compounds having fourteen carbon atoms or less, removing normally gaseous compounds from said fraction to provide a light liquid fraction, and blending said light liquid fraction with said recycle solvent fraction in a ratio such that the blend contains an enhanced proportion of hydrogen donors having fourteen or less carbon atoms.

4,374,726
SEPARATION OF HYDROGEN FROM A CATALYTIC REFORMING ZONE EFFLUENT STREAM
Eugene Schmelzer, Skokie, and Constante P. Tagamolila, Des Plaines, both of Ill., assignors to UOP Inc., Des Plaines, Ill. Continuation of Ser. No. 228,515, Jan. 26, 1981, abandoned. This application Mar. 18, 1982, Ser. No. 359,325
Int. Cl.³ C10G *47/00, 49/22*
U.S. Cl. 208—101 **7 Claims**

1. A process for the catalytic reforming of a hydrocarbonaceous feedstock which comprises the steps of:

(a) contacting said feedstock with a reforming catalyst in a reforming zone in the presence of recycle hydrogen, said reforming zone being maintained at reforming conditions including a pressure of from about 50 to about 250 psig to produce an effluent stream comprising hydrogen admixed with hydrocarbon conversion products;

(b) separating said effluent in a first gas-liquid separation zone at a low pressure relative to said reforming zone and forming a hydrogen-rich vapor phase and a liquid hydrocarbon phase comprising the heavier hydrocarbon conversion products;

(c) compressing one portion of said vapor phase to said reforming pressure and recycling the same to said reforming zone in admixture with the hydrocarbonaceous feedstock initially charged thereto to provide substantially all of said recycle hydrogen in accordance with step (a);

(d) compressing the balance of said hydrogen-rich vapor phase to a high pressure relative to said reforming pressure;

(e) admixing the vapor phase from step (d) with at least a portion of the liquid hydrocarbon phase from step (b) at said relatively high pressure;

(f) treating the resulting mixture in a second gas-liquid separation zone at said relatively high pressure and forming a vapor phase comprising a relatively pure net hydrogen product and a liquid hydrocarbon phase comprising hydrocarbon conversion products;

(g) discharging the net hydrogen product from the reforming process; and,

(h) introducing the liquid hydrocarbon phase into a fractionation column at conditions to produce an overhead fraction comprising light hydrocarbon conversion products, and a higher boiling fraction comprising the heavier hydrocarbon conversion products.

4,374,727
ELECTROSTATIC SORTING APPARATUS
Takeo Takahashi, and Koichi Tabei, both of Kanagawa, Japan, assignors to Fuji Electric Co., Ltd., Kanagawa, Japan
Filed May 27, 1981, Ser. No. 267,510
Claims priority, application Japan, May 28, 1980, 55-71212; May 28, 1980, 55-71213
Int. Cl.³ B03C *7/04, 7/08*
U.S. Cl. 209—127 B **11 Claims**

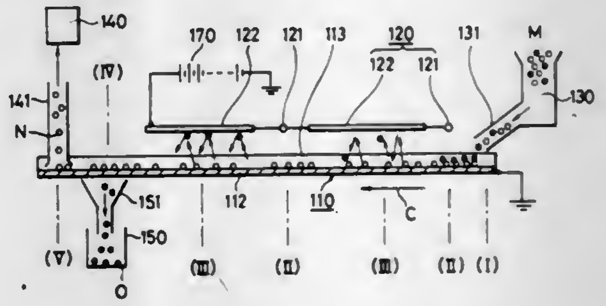

1. An electrostatic sorting apparatus comprising:

sorting means comprising a trough-like channel formed on the upper surface of a horizontal conveyor member, said conveyor member being driven from a supplying position of a mixture to be sorted toward a sorting and recovering position;

high voltage d-c electrode means comprising a corona discharge electrode and a flat electrode, said flat electrode confronting said conveyor member, said conveyor member forming an opposed electrode with said flat electrode and said conveyor member being at a different potential than said flat electrode, wherein insulating particles of said mixture are charged with the same polarity as said high voltage electrode means by means of an ion shower caused by said corona discharge electrode to attract said insulating particles into said channel of said sorting means, and wherein conductive particles of said mixture are charged with the same polarity as said conveyor member by electrostatic induction to reciprocate said conductive particles between said conveyor belt and said flat electrode of said high voltage electrode by electrostatic force

to thereby move said conductive particles out of said channel;

mixture supplying means for supplying said mixture to said channel of said sorting means; and

means for separately collecting conductive particles and insulating particles sorted from said mixture.

4,374,728

APPARATUS FOR SCREENING FIBROUS STOCK

W. Thomas Gauld, 4313 Winding Way, Mobile, Ala. 36609

Filed Jul. 29, 1981, Ser. No. 288,101

Int. Cl.^{3} B07B *1/20*

U.S. Cl. 209—273 **4 Claims**

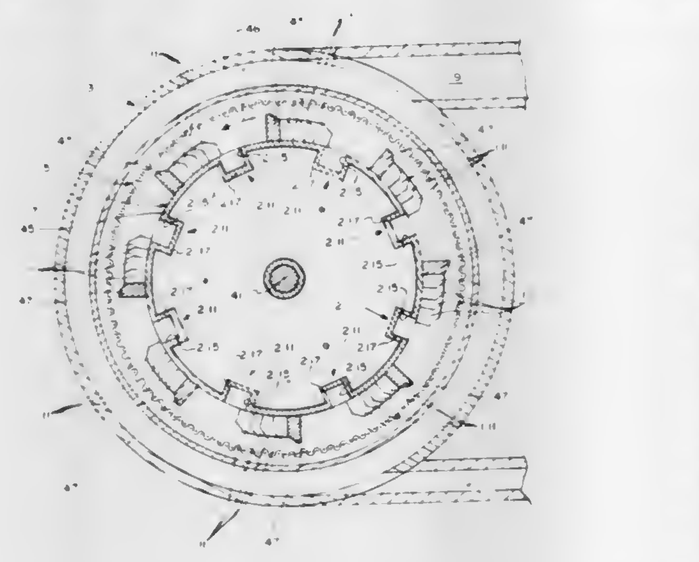

1. An improved apparatus for screening fibrous stock of the type including a hollow housing member having an inlet port for allowing fibrous stock to be introduced into the interior thereof and having an outlet port for allowing screened fibrous stock to be discharged therefrom; a cylindrical, open ended screen member positioned within said housing member; said housing member including structure means for fixedly mounting said screen member within said housing member and for isolating the outer side of said screen member to divide the interior of said housing member into a first chamber and a second chamber with the boundary between said first and second chambers defined in part by said screen member, said inlet port communicating directly with said first chamber and said outlet port communicating directly with said second chamber; a rotatable shaft member located substantially along the longitudinal axis of said screen member; a rotor means for causing fibrous stock within said first chamber to pass through said screen member into said second chamber and out said outlet port, said rotor means including a cylindrical body member fixedly attached to said shaft member for rotation therewith and including a plurality of blade members attached to and spaced substantially evenly about the circumference of said body member and radiating outwardly therefrom, each of said blade members having a leading side and a trailing side and having an outer side joining said leading and trailing sides, said body member having a substantially closed first end and a second end and a side wall, said blade members extending between said first and second ends of said body member; wherein the improvement comprises: a plurality of passageway means in said body member for allowing a portion of the fibrous stock entering said inlet port to pass from said first end of said body member to a point between said first and second ends of said body member, the combined cross-sectional area of said passageway means being greatly less than the cross-sectional area of said first end of said body member.

4,374,729

STRAINER DRUM FOR PULP AND THE LIKE

Rune H. Frykhult, Huddinge, Sweden, assignor to AB Celleco, Stockholm, Sweden

Filed Jan. 26, 1981, Ser. No. 228,543

Claims priority, application Sweden, Jan. 24, 1980, 8000563

Int. Cl.^{3} B01D *33/06*

U.S. Cl. 210—232 **7 Claims**

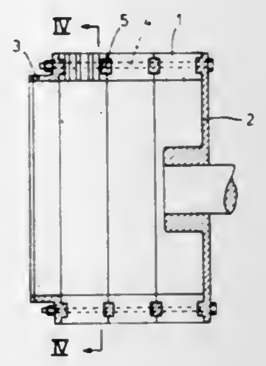

1. A strainer drum for straining pulp and the like, comprising a substantially circular cylindrical mantle having a longitudinal axis and formed by strainer elements provided with strainer openings, a pair of gables forming opposite ends of the drum and between which the strainer elements are held together to form said mantle, said elements having inter-abutting edges to form a circular series of said elements as viewed in a plane transverse to said axis, there being a plurality of said circular series interposed between said gables, first means releasably interlocking said abutting edges in each circular series to prevent radial movement of said elements, each pair of adjacent circular series having interengaging surfaces, and second means releasably interlocking said interengaging surfaces to interconnect the strainer elements of each circular series in said adjacent pair.

4,374,730

PROCESS AND APPARATUS FOR THE BIOLOGICAL PURIFICATION OF SEWAGE

Alexandru Braha, Frankenthal; Hans Daucher, Ludwigshafen; Klaus Hess, Bad Durkheim; Peter Kroetzsch, Ketsch; Helmut Merkel, Lampertheim; Roland Roedl, Neustadt; Walter Schwaegerl, Hessheim, and Richard Stickel, Bad Durkheim, all of Fed. Rep. of Germany, assignors to BASF Aktiengesellschaft, Ludwigshafen, Fed. Rep. of Germany

Filed Dec. 12, 1980, Ser. No. 215,758

Claims priority, application Fed. Rep. of Germany, Jan. 25, 1980, 3002604

Int. Cl.^{3} C02F *3/30*

U.S. Cl. 210—608 **8 Claims**

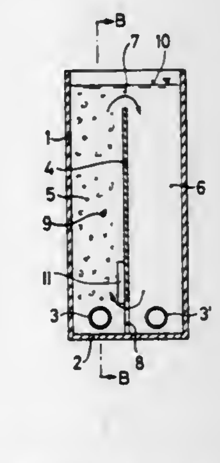

1. A process for the biological purification of effluent which is contaminated with nitrogen in the form of ammonium, nitrite or nitrate ions or in the form of organic compounds, by oxidizing the nitrogen under aerobic conditions and reducing the

nitrogen under anaerobic conditions, without resort to moving filter beds, said process comprising the steps of:

mixing the sewage to be treated with activated sludge;

introducing oxygen-containing gas bubbles, in an aerobic compartment of an activated sludge basin, from below and thus subjecting the sewage to said bubbles, said basin having a vertical partition which divides the basin into said aeration compartment and a denitrification compartment,

simultaneously enriching said sewage with dissolved oxygen, to oxidize carbon compounds and nitrogen compounds,

transporting the sewage upward, and

causing gas to be released at the surface of the liquid,

the sewage being subjected to the gas bubbles in such a way that two substantially orthogonal circulation paths are set up for the sewage over the first of which paths the sewage, upon being transported upward, due to the higher average density of the mixture of lower gas content in part automatically flows downward again in the aeration compartment to undergo further aeration, and over the second of which paths to another part overflows into a denitrification compartment, and denitrification compartment communicating through an opening at the liquid surface and with the aeration compartment through an opening at the bottom of the partition between said compartments;

causing the sewage, in the denitrification compartment, to be physically mixed with the contents thereof, and

causing the sewage to flow back, through said opening at the bottom, to the aeration compartment.

4,374,731

METHOD AND APPARATUS FOR OBTAINING A DESIRED RATE OF PLASMA COLLECTION FROM A MEMBRANE PLASMAPHERESIS FILTER

Richard I. Brown, Northbrook, and Arnold C. Bilstad, Deerfield, both of Ill., assignors to Baxter Travenol Laboratories, Inc., Deerfield, Ill.

Filed Mar. 6, 1980, Ser. No. 127,733

Int. Cl.^{3} B01D *31/00, 13/00*

U.S. Cl. 210—637 **9 Claims**

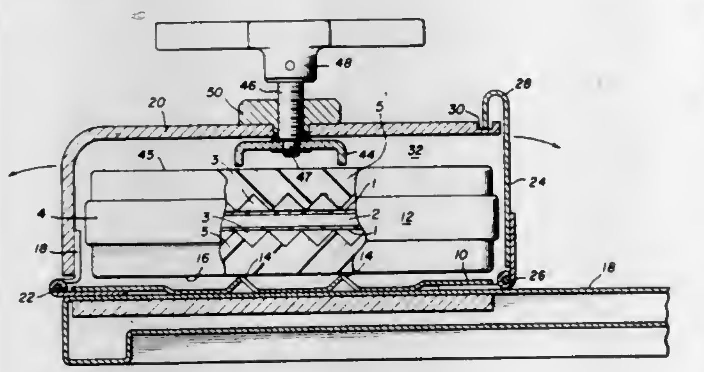

1. A method for obtaining a desired rate of plasma collection from a membrane plasmapheresis filter having a pair of spaced microporous filter membranes defining therebetween a blood flow path which has spaced inlet and outlet ends and which expands in cross section during blood flow therethrough, which method comprises the steps of:

establishing a flow of blood between the inlet and outlet ends of the blood flow path,

applying pressure against and at substantially a perpendicular direction with respect to the membranes essentially along the entire axial length of the blood flow path between the inlet and outlet ends thereof to establish the spacing between the membranes to develop at the inlet end of the blood flow path a blood pressure preselected to achieve a desired transmembrane pressure, and

continuously maintaining the pressure essentially along the entire axial length of the blood flow path to prevent a subsequent expansion of the blood flow path in cross section during the plasmapheresis procedure and to thereby maintain the desired blood inlet pressure.

4,374,732

RESINS FOR REMOVAL OF ORGANO-SULFUR COMPOUNDS FROM ORGANIC OR AQUEOUS MEDIA

Roger J. Hopper, Akron, Ohio, assignor to The Goodyear Tire & Rubber Company, Akron, Ohio

Continuation-in-part of Ser. No. 198,022, Oct. 17, 1980, abandoned, which is a continuation of Ser. No. 61,577, Jul. 30, 1979, abandoned, which is a continuation-in-part of Ser. No. 918,243, Jun. 23, 1978, abandoned. This application Sep. 30, 1981, Ser. No. 307,348

Int. Cl.^{3} B01D *15/00, 15/04*

U.S. Cl. 210—690 **1 Claim**

1. A process of removing organo-sulfur impurities from a solution comprising, contacting said solution with a polymer which is a styrene/divinylbenzene copolymer containing 0.1 to 35 parts by weight of divinylbenzene per hundred parts by weight of the polymer, said polymer being characterized by containing at least one of the following pendant groups:

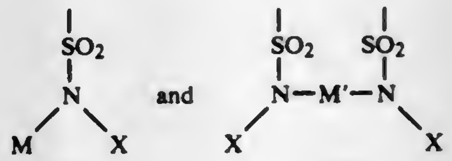

(I) and (II)

wherein X is selected from the group consisting of chlorine and bromine, M is selected from the group consisting of sodium and potassium and M' is selected from the group consisting of calcium and magnesium wherein said polymer contains at least one mole of said pendant groups for every mole of said organo-sulfur impurities that are to be removed, and said organo-sulfur impurities being characterized by the structural formulae, $RS_{n'}R^1$ and R^2SH, wherein R, R^1 and R^2 are hydrocarbon radicals such as alkyl radicals having 1 to 20 carbon atoms, monounsaturated alkyl radicals having 3 to 20 carbon atoms diunsaturated alkyl radicals having 4 to 20 carbon atoms, aryl radicals having 6 to 20 carbon atoms, aralkyl radicals having 7 to 20 carbon atoms, cycloalkyl radicals having 5 to 12 carbon atoms and n' equals 1 to 2, and those having the structure

wherein R^3 is an alkylene radical of 3 to 6 carbon atoms, optionally branched with one or two alkyl groups of 1 to 6 carbon atoms, and wherein R, R^1, R^2, and R^3 may optionally contain chloro, bromo, fluoro, hydroxy, alkoxy, aryloxy, cyano, nitro, carboalkoxy, carboaryloxy, alkylsulfonyl and arylsulfonyl substituents located one or more carbon atoms from the carbon attached to sulfur.

4,374,733

METHOD FOR TREATING AQUEOUS MEDIUMS

William R. Snyder, Warminster, and Diane Feuerstein, Bensalem, both of Pa., assignors to Betz Laboratories, Inc., Trevose, Pa.

Filed Apr. 1, 1981, Ser. No. 249,774

Int. Cl.^{3} C02F *5/10*

U.S. Cl. 210—701 **15 Claims**

1. Method of controlling the deposition of scale imparting precipitates on the structural parts of a system exposed to an aqueous medium containing scale imparting precipitates under deposit forming conditions, said scale imparting precipitates being selected from the group consisting of calcium carbonate,

calcium phosphate, and calcium sulfate, and mixtures thereof, said method comprising adding to said aqueous medium an effective amount for the purpose of a water soluble polymer (I) comprising a copolymer of acrylic acid or water soluble salt thereof and 2 hydroxypropylacrylate or hydroxyethylacrylate wherein said polymer (I) has a molecular weight of from about 500 to 1,000,000, and also adding to said aqueous medium an effective amount of a water soluble polymer (III) or water soluble salt or hydrolysate acid form thereof, said polymer (III) comprising a sulfonated styrene/maleic anhydride copolymer having the formula

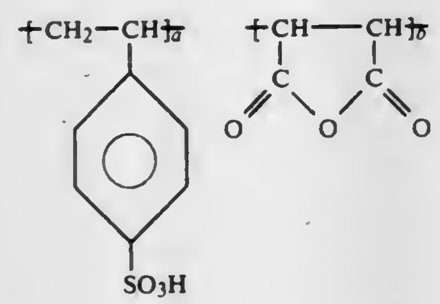

wherein the molar ratio a:b of said polymer (II) is about 3:1 and wherein the molecular weight of said polymer (II) is about 1500 and wherein the molar ratio of polymer (I) to polymer (II) is about 10:1 to 1:10 and wherein said polymer (I) and (II) are added to said aqueous medium in an amount of about 0.1-500 parts polymer (I) and (II) per million parts of said aqueous medium.

4,374,734

EMULSION BREAKING OF SURFACTANT STABILIZED CRUDE OIL IN WATER EMULSIONS

Jack Newcombe, Tulsa, Okla., assignor to Cities Service Co., Tulsa, Okla.

Filed Jun. 19, 1981, Ser. No. 275,473

Int. Cl.[3] B01D *17/04*

U.S. Cl. 210—708 **8 Claims**

1. Process for recovering crude oil from an oil-in-water emulsion comprising crude oil, water, and sufficient petroleum sulfonate surface active agents with an equivalent weight range of 350 to 500 to stabilize said emulsion, said process comprising:

(a) adding to the emulsion

(1) an amount of brine equivalent to 1 to 50 wt % of the total emulsion prior to brine addition,

(2) 100 to 1000 wt ppm of quaternary ammonium surfactant compound with a molecular weight of 200 to 700, based on the original emulsion, and

(3) 100 to 1000 wt ppm of polyol emulsion breaking reagent with a molecular weight of 1,000 to 10,000, based on the original emulsion,

(b) mixing the above components to break said oil-in-water emulsion, and

(c) settling the mixture to recover a sprung, or released, oil phase of reduced water content from a water phase.

4,374,735

METHOD FOR REMOVAL OF OIL FROM SORBENTS USING GLYCOLIPIDS

Walter Lindörfer, Kassel; Walther Schulz, Vechta; Fritz Wagner, Stöckheim, and Wilhelm Jahn-Held, Staufenberg, all of Fed. Rep. of Germany, assignors to Wintershall Aktiengesellschaft, Kassel and Gesellschaft fur Biotechnologische Forschung, Braunschweig-Stockheim, both of, Fed. Rep. of Germany, part interest to each

Filed Jun. 11, 1980, Ser. No. 158,621

Claims priority, application Fed. Rep. of Germany, Jul. 16, 1979, 2928674

Int. Cl.[3] E02B *15/04*

U.S. Cl. 210—772 **5 Claims**

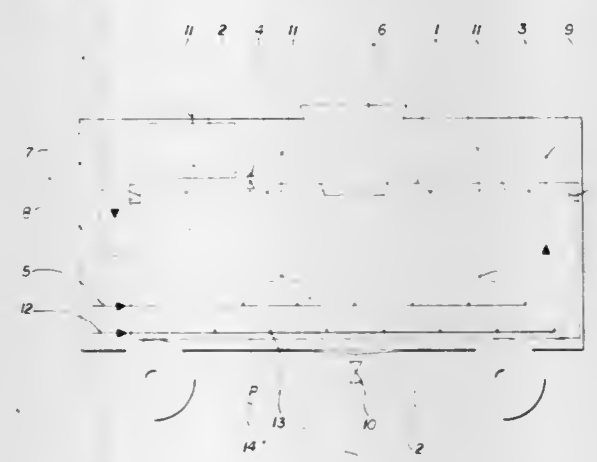

1. A process for separating oils or petroleum hydrocarbons from a sorbent material saturated with said oils or petroleum hydrocarbons which consists essentially of mixing said sorbent material with an aqueous solution or dispersion of microbially produced glycolipids to form a slurry and separating the oil-containing phase rising out of the aqueous phase, wherein said sorbent material is selected from the group consisting of hydrophobic, thermally expanded vermiculites and perlites.

4,374,736

DUAL-FLOW BAND SCREEN AND PROCESS FOR SUBSTITUTING IT FOR A THROUGH-FLOW BAND SCREEN

Philip Jackson, Paris, France, assignor to E. Beaudrey & Co. Societe Anonyme, Paris, France

Filed Feb. 24, 1981, Ser. No. 237,719

Claims priority, application France, Mar. 3, 1980, 80 04678

Int. Cl.[3] B01D *33/02*

U.S. Cl. 210—783 **10 Claims**

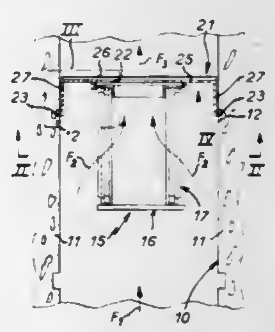

1. A dual-flow band screen for a sluice, said dual-flow band screen comprising a carrying frame, a screening band mounted for movement in an endless loop on said carrying frame, and a support wall mountable in guides provided in the sluice and cooperable with said carrying frame and positioning said carrying frame in the sluice, said support wall extending perpendicularly to generatrices of said screening band and generally parallel to said carrying frame, an aperture in said support wall being wholly contained within the contour defined by said screening band, said support wall having lips for engagement in the guides.

4,374,737

NONPOLLUTING DRILLING FLUID COMPOSITION

Dana E. Larson; Ronnie J. Mouton, both of P.O. Box 53094, Lafayette, La. 70505, and Chris J. Mocek, Houston, Tex., assignors to Dana E. Larson and Ronnie J. Mouton, both of Lafayette, La.

Continuation of Ser. No. 111,543, Jan. 14, 1980, abandoned. This application Jul. 24, 1981, Ser. No. 285,431

Int. Cl.[3] C09K *7/06*

U.S. Cl. 252—8.5 P **7 Claims**

1. A composition for use as a drilling mud when mixed with water which consists essentially of:

a concentrate consisting essentially of:

12.5% to 42.5% by weight of diethanolamide, which consists essentially of

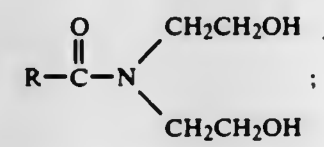

40.0% to 70.0% by weight of a tall oil fatty acid, which consists essentially of

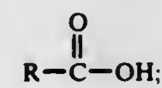

and 2.5% to 32.5% by weight of imidazoline/amide mixture, which consists essentially of

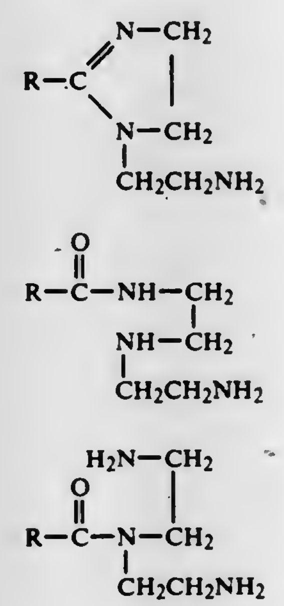

wherein R is primarily unsaturated straight chain hydrocarbon groups having 17 carbon atoms and is the hydrocarbon residue remaining after removal of the carboxyl group from tall oil fatty acids

and a biodegradable, non-polluting oil, wherein the concentrate constitutes a minor amount of the composition sufficient to act as an emulsifier when the composition is added to water.

4,374,738

DRILLING FLUID COMPOSITION

Jack R. Kelley, Whatcom County, Wash., assignor to Georgia-Pacific Corporation, Atlanta, Ga.

Continuation of Ser. No. 157,876, Jun. 9, 1980, abandoned. This application Sep. 21, 1981, Ser. No. 303,946

Int. Cl.[3] C09K *7/02*

U.S. Cl. 252—8.5 C **19 Claims**

1. A water-base drilling fluid comprising a suspension of clay material and an effective dispersing amount of a water-soluble graft copolymer which is the reaction product of lignosulfonate and an acrylic compound selected from the group consisting of acrylic acid, acrylonitrile, acrylamide, and esters of alcohols of one or two carbon atoms and acrylic acid, said reaction product being prepared by reacting lignosulfonate with from 5 to 30 weight percent said acrylic compound at a pH below 6 using a free radical initiator, said reaction product having an average molecular weight not exceeding about 80,000.

4,374,739

OIL WELL TREATING METHOD AND COMPOSITION

Homer C. McLaughlin, and Jimmie D. Weaver, both of Duncan, Okla., assignors to Halliburton Company, Duncan, Okla.

Continuation of Ser. No. 901,664, May 4, 1978, which is a continuation-in-part of Ser. No. 714,213, Aug. 13, 1976, abandoned. This application Feb. 4, 1980, Ser. No. 117,938

Int. Cl.[3] E21B *43/12, 43/25*

U.S. Cl. 252—8.55 R **4 Claims**

1. A method of treating a clay-containing earth formation for the purpose of preventing or at least reducing the swelling, migration and/or dispersion of said clay to thereby stabilize said formation, said method being comprised of contacting said clay in said formation with an effective amount of an organic polycationic polymer dispersed or dissolved in a carrier fluid, said contacting being for a time sufficient for said organic polycationic polymer to replace cations to thereby transform said clay to a more stable form wherein said organic polycationic polymer contains repeating monomer units defined by at least one of the structural formulae:

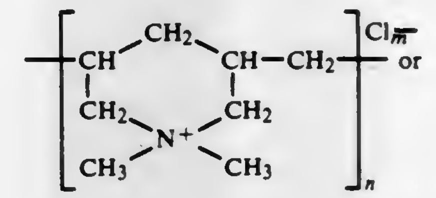

or

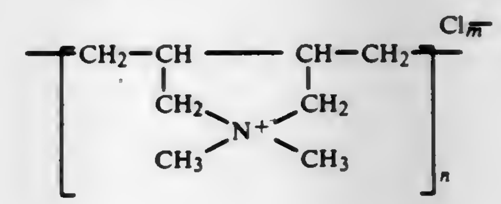

wherein:

n is an integer equal to the number of monomer units in the polymer required to give a molecular weight in the range of from about 800 to 3,000,000; and

m is an integer equal to the number of anions required to maintain electronic neutrality.

4,374,740

WATER SOLUBLE SURFACTANT MOBILITY CONTROL AGENT IN OIL RECOVERY

Catherine S. H. Chen, Berkeley Heights, N.J., assignor to Mobil Oil Corporation, New York, N.Y.

Filed Jan. 16, 1981, Ser. No. 225,573

Int. Cl.[3] E21B *43/22*

U.S. Cl. 252—8.55 D **7 Claims**

1. In a method of recovering oil from an oil containing subterranean formation penetrated by one or more injection wells and a production well and wherein an aqueous fluid is injected via said injection well, or wells, into said formation to displace said oil to said production well, the improvement comprising: employing in at least a portion of said aqueous fluid injected via said injection well, or wells, into said formation a water-soluble polymer having a molecular weight within the range of 10,000 to 10,000,000, said polymer being employed in a sufficient amount to thicken said portion of said aqueous fluid and provide improved efficiency in displacing said oil to said production well, said water-soluble copolymer

being formed of synthetic polymers having stiff backbones wherein the main chain consists of

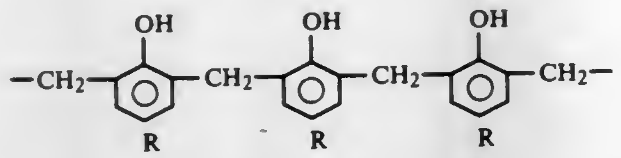

wherein at least 20 percent by wt. of the OH groups have been replaced by:

$$-O-(CH_2-CH_2-O)_y-CH_2-CH_2-CH_2SO_3Na$$

where y is 2 to 10 and wherein R is alkyl having from about 1 to 30 carbon atoms, aryl having from about 6 to 24 carbon atoms or alkylaryl having from about 6 to 30 carbon atoms.

4,374,741

POLYAMIDE AND FUNCTIONAL FLUID CONTAINING SAME

Walter E. Rieder, Arcadia, Calif., assignor to Cincinnati Milacron Inc., Cincinnati, Ohio

Filed Jul. 21, 1981, Ser. No. 285,575

Int. Cl.³ C10M *1/06, 1/20, 1/36;* **C08F** *36/00*

U.S. Cl. 252—34 **33 Claims**

1. A polyamide derivative of a polyoxalkylene diamine wherein said polyamide has (a) a single terminal carboxylic acid group and a single terminal amine group in the same molecule, and (b) a degree of polymerization of from 2 to 10 or the salt of the polyamide which is the salt of (c) the terminal carboxylic acid group, (d) the terminal amine group, or (e) both the terminal carboxylic acid and terminal amine groups, wherein the polyamide has the following formula

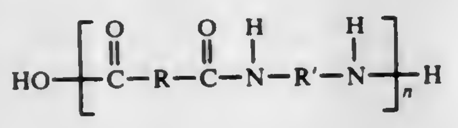

where

R is a divalent aliphatic, aromatic, arylaliphatic, alkylaromatic, cycloaliphatic, heteroaliphatic having oxygen or sulfur heterochain atoms, heterocyclic having one to two oxygen, sulfur or nitrogen hetero ring atoms and from 5 to 6 ring atoms or bicyclic radical or the halogenated derivatives of said divalent radical,

R′ is a divalent polyoxyalkylene homopolymer or copolymer radical and

n is 2 to 10,

said polyamide and its salts having an average molecular weight not greater than about 50,000.

4,374,742

NOVEL LUBRICANT ADDITIVES

Samuel Evans; Michael Rasberger, and Eberhard Gegner, all of Riehen, Switzerland, assignors to Ciba-Geigy Corporation, Ardsley, N.Y.

Continuation of Ser. No. 64,238, Aug. 6, 1979, abandoned. This application May 29, 1981, Ser. No. 268,309

Claims priority, application Switzerland, Aug. 18, 1978, 8790/78

Int. Cl.³ C07F *7/08, 7/10*

U.S. Cl. 252—48.4 **11 Claims**

1. A compound of the formula I

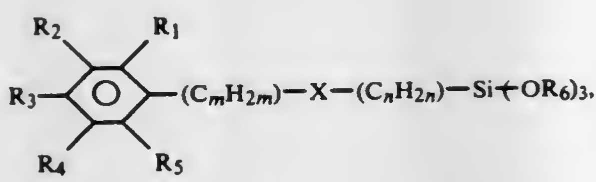

(I)

wherein one of R_1 and R_3 is hydrogen and the other is OH, each of R_2, R_4 and R_5 independently is C_1–C_{12}alkyl, C_5–C_7cycloalkyl, C_6–C_{10}aryl or C_7–C_9aralkyl, and R_4 and R_5 are also hydrogen, R_6 is C_1–C_{18}alkyl, each of m and n independently is an integer from 0 to 6, X is the direct bond, —O—, —S—, —N(R_7)—, —Q—R_8— or

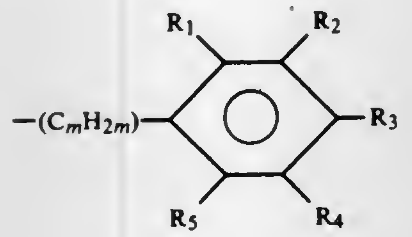

(II)

wherein R_7 represents hydrogen, C_1–C_{12}alkyl, phenyl or a group of the formula II

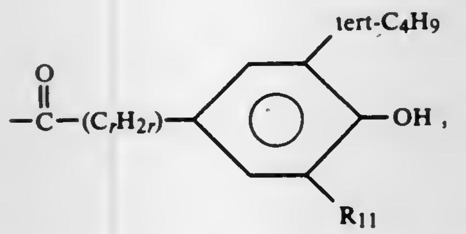

(IV)

wherein R_1, R_2, R_3, R_4, R_5 and m are as defined above, Q is —O— or —NH—, R_8 represents a group of the formula III

$$-CH_2-CH(OR_{10})-CH_2-O- \quad \text{(III)}$$

wherein R_{10} is hydrogen, C_1–C_{12}alkyl or a group of the formula IV

$$-\overset{\overset{\large O}{\|}}{C}-R_9-,$$

wherein r is an integer from 0 to 6, R_{11} is hydrogen, C_1–C_{12}alkyl, C_5–C_7cycloalkyl, C_6–C_{10}aryl or C_7–C_9aralkyl, and R_9 is —O—, —NH—, —CH.H$_2$N—, —O—CH$_2$CH$_2$—S—,

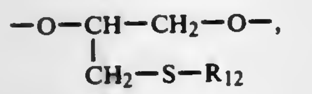

—O—R_8—, or a group of the formula V

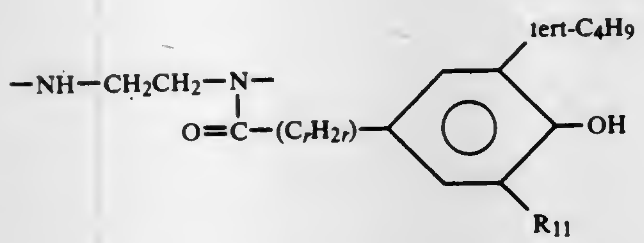

(V)

wherein R_8, R_{11} and r are as defined above, and R_{12} is C_1–C_{18}alkyl, C_5–C_7cycloalkyl, C_6–C_{10}aryl, C_7–C_9aralkyl or a group of the formulae VI or VII

$$-(C_uH_{2u})-COOR_{10} \quad \text{(VI)}$$

or

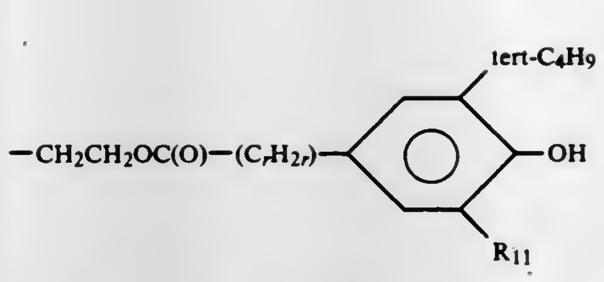

(VII)

wherein u is an integer from 1 to 6 and R_{10}, R_{11} and r are as defined above.

4,374,743

METHOD OF PREPARING SNOW AND ICE CONTROL COMPOSITIONS

Richard F. Stockel, 475 Rolling Hills Rd., Bridgewater, N.J. 08807

Continuation-in-part of Ser. No. 38,877, May 14, 1979, abandoned. This application Nov. 3, 1980, Ser. No. 203,642

Int. Cl.³ C09K *3/18*

U.S. Cl. 252—70 **6 Claims**

1. A method of preparing a snow and ice control composition comprising the steps of combining a coal ash material, a salt and/or organic material for lowering the melting point of snow or ice, a silicate finding agent having a silica/alkali metal oxide ratio of 3.50 to 2.00 and enough water to form a dough-like workable mixture; pelletizing said mixture and heating said pellets to form shaped particles having excellent crush resistance.

4,374,744

STRIPPING SOLUTION FOR TIN OR TIN ALLOYS

Yutaka Kawanabe, Toyonaka, and Takeyoshi Kishimoto, Yamatokoriyama, both of Japan, assignors to Mec Co., Ltd., Hyogo, Japan

Filed Apr. 6, 1982, Ser. No. 366,018

Claims priority, application Japan, Apr. 6, 1981, 56-50515

Int. Cl.³ C09K *13/06;* **C11D** *7/00;* **C23F** *1/00*

U.S. Cl. 252—79.4 **12 Claims**

1. A stripping solution for tin and tin alloys comprising an inorganic and/or organic acid, an oxidizing agent and a heterocyclic compound free of sulfur but containing a nitrogen atom in the form of =NH or ≡N as a ring-forming member.

4,374,745

CLEANING COMPOSITIONS

Murray J. Sibley, Berkley, and Rebecca F. Nite, Cupertino, both of Calif., assignors to Barnes-Hind Pharmaceuticals, Inc., Sunnyvale, Calif.

Filed Aug. 13, 1981, Ser. No. 292,752

Int. Cl.³ C11D *1/68, 3/20*

U.S. Cl. 252—106 **14 Claims**

1. An aqueous composition for cleaning lenses and spectacle frames comprising:

(a) from 0.02 to 25.0% by weight of at least one nonionic cleaner;

(b) from 0.01 to 10.0% by weight of a diglycol carbonate monomer;

(c) from 0.01–10.0% by weight of an anti-fogging agent;

(d) up to about 25% by weight of a lower aliphatic alcohol;

(e) up to 1.0% by weight of a preservative agent; and

(f) water.

4,374,746

CYCLOHEXYL PHENETHYLETHER DERIVATIVES, PROCESS FOR PREPARING SAME AND USES THEREOF IN COMBATTING TOBACCO BEETLES AND IN AUGMENTING OR ENHANCING THE AROMA OF PERFUMES, COLOGNES AND PERFUMED ARTICLES

Jacob Kiwala, Brooklyn, N.Y.; Richard J. Tokarzewski, Keyport, N.J.; Frederick L. Schmitt, Holmdel, N.J., and Mark A. Sprecker, Sea Bright, N.J., assignors to International Flavors & Fragrances Inc., New York, N.Y.

Division of Ser. No. 235,844, Feb. 19, 1981, Pat. No. 4,324,923, which is a continuation-in-part of Ser. No. 192,238, Sep. 30, 1980, Pat. No. 4,306,096. This application Sep. 25, 1981, Ser. No. 305,537

The portion of the term of this patent subsequent to Apr. 13, 1999, has been disclaimed.

Int. Cl.³ C11D *3/50, 9/44*

U.S. Cl. 252—174.11 **1 Claim**

1. A process for augmenting or enhancing the aroma of a solid or liquid anionic, cationic, nonionic or zwitterionic detergent comprising the step of adding to a solid or liquid anionic, cationic, nonionic or zwitterionic detergent base, an aroma augmenting or enhancing quantity of the cyclohexyl phenethylether derivative defined according to the structure:

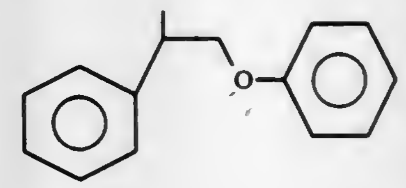

4,374,747

BLEACH PRODUCTS

Ho T. Tai, Santes, France, assignor to Lever Brothers Company, New York, N.Y.

Filed Mar. 31, 1980, Ser. No. 136,136

Claims priority, application France, Apr. 20, 1979, 79 10064

Int. Cl.³ C11D *3/395, 7/54, 17/00*

U.S. Cl. 252—186.26 **12 Claims**

1. A bleach product comprising a percompound contained within a closed water-insoluble but water-permeable bag of fibrous sheet material in the form of paper or of woven or non woven fabric provided with a protective water-impermeable coating, removable in water at a temperature of 30°–75° C. said coating being of an organic material which is solid at room temperature.

4,374,748

4′-(β-ALKYLOXYETHOXY)-4-CYANOBIPHENYL

Takashi Inukai; Hideo Sato; Hiromichi Inoue, and Masahiro Fukui, all of Yokohama, Japan, assignors to Chisso Corporation, Osaka, Japan

Filed Sep. 2, 1981, Ser. No. 298,769

Claims priority, application Japan, Sep. 4, 1980, 55-122681

Int. Cl.³ C09K *3/34;* **C02F** *1/13*

U.S. Cl. 252—299.66 **4 Claims**

1. A 4′-(β-alkyloxyethoxy)-4-cyanobiphenyl represented by the general formula:

(I)

wherein R represents a straight alkyl group having from 1 to 6 carbon atoms.

4,374,749
INDEX-MATCHED PHOSPHOR SCINTILLATOR STRUCTURES

Dominic A. Cusano, Schenectady, N.Y.; Robert K. Swank, Colorado Springs, Colo., and Philip J. White, Georgetown, Mass., assignors to General Electric Company, Schenectady, N.Y.
Division of Ser. No. 169,023, Jul. 15, 1980, Pat. No. 4,316,817, which is a continuation-in-part of Ser. No. 863,856, Dec. 23, 1977, abandoned. This application Nov. 12, 1981, Ser. No. 320,805
Int. Cl.³ C09K *11/465, 11/24*
U.S. Cl. 252—301.36 **6 Claims**

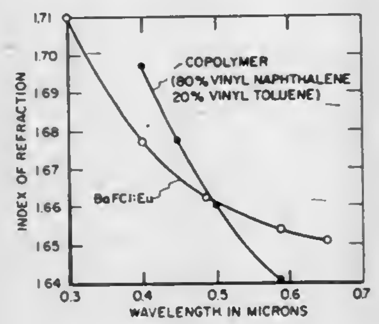

1. A method of producing scintillator bodies for use in computerized tomography with increased detectable optical output from a phosphor which absorbs electromagnetic radiation at supra-optical frequencies and emits electromagnetic radiation at optical frequencies, said method comprising the steps of:
(A) pulverizing a polyvinyl naphthalene toluene polymer having an index of refraction equal to the index of refraction of BaFCl:Eu phosphor, at approximately the wavelength of the optical emission of the phosphor, said polymer being substantially transparent to the optical wavelength radiation emitted by the phosphor and also being substantially transparent to supra-optical electromagnetic radiation;
(B) uniformly mixing the pulverized polymer with the phosphor;
(C) heating the powder from step B at a sufficiently high temperature and pressure to cause the polymer to flow forming a solid body, but below a temperature so high as to cause decomposition of any component.

6. The scintillator body produced in accordance with claim 1.

4,374,750
FLUID CATALYST REGENERATION PROCESS AND APPARATUS

Anthony G. Vickers, Arlington Heights; Harold U. Hammershaimb, Western Springs, and Charles L. Hemler, Jr., Mt. Prospect, all of Ill., assignors to UOP Inc., Des Plaines, Ill.
Filed Aug. 3, 1981, Ser. No. 289,571
Int. Cl.³ B01J *29/38, 21/20;* **C10G** *11/18, 11/05*
U.S. Cl. 252—417 **8 Claims**

1. A process for regenerating a coke contaminated fluid catalyst, said process including the steps of:
(a) introducing oxygen containing regeneration gas, coke contaminated fluid catalyst, cool recycled regenerated catalyst and hot recycled regenerated catalyst from sources hereinafter described, into a lower locus of a dilute phase combustion zone maintained at a temperature sufficient for coke oxidation and therein oxidizing coke to produce hot regenerated catalyst and hot flue gas;
(b) transporting said hot flue gas and said hot regenerated catalyst from an upper locus of said combustion zone into a regenerated catalyst disengaging zone, wherein said hot regenerated catalyst is separated from said flue gas;
(c) transporting a first portion of said hot regenerated catalyst from said disengaging zone to a cooling zone separate from said disengaging zone wherein heat is withdrawn from said hot regenerated catalyst to produce cool regenerated catalyst;
(d) withdrawing said cool regenerated catalyst from said cooling zone and transporting it into said combustion zone as said cool recycled regenerated catalyst wherein said quantity of cool recycled regenerated catalyst is controlled responsive to a temperature sensed at said upper locus of said combustion zone; and
(e) transporting a second portion of said hot regenerated catalyst from said disengaging zone into said combustion zone as said hot recycled regenerated catalyst.

2. The process of claim 1 wherein said first portion of hot regenerated catalyst is introduced into an upper locus of said

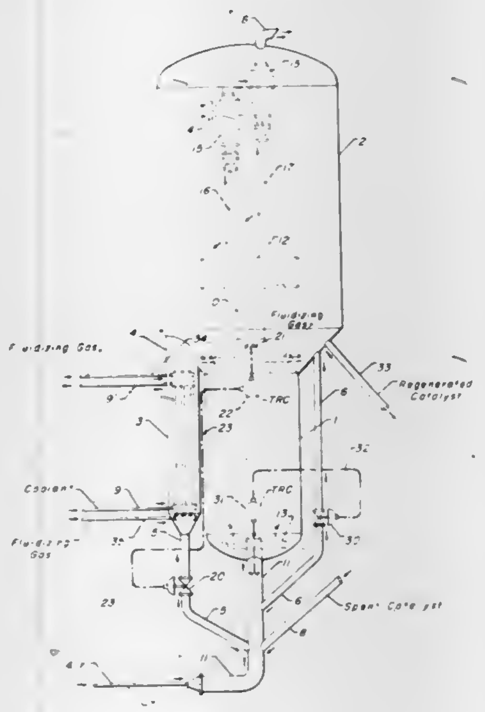

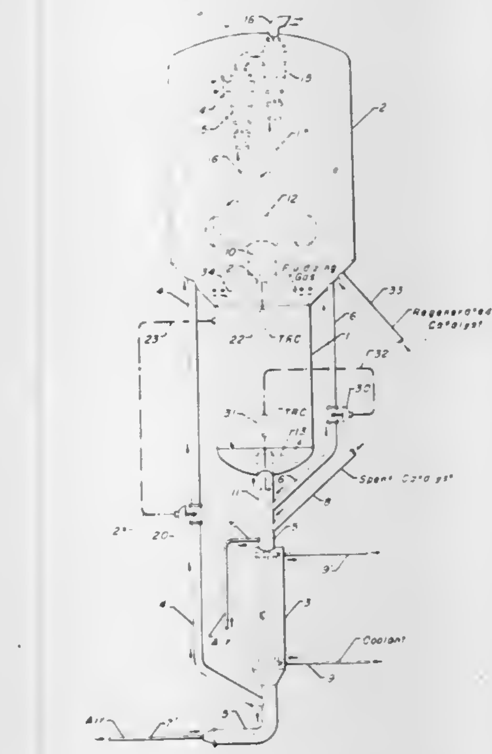

cooling zone, is passed downwardly through said cooling zone in a dense phase fluidized bed, and said cool regenerated catalyst is withdrawn from said cooling zone at a lower locus thereof.

3. The process of claim 1 wherein said first portion of hot regenerated catalyst is introduced into a lower locus of said cooling zone, is carried upwardly through said cooling zone by a portion of said regeneration gas in a dilute phase, and said cool regenerated catalyst is withdrawn from said cooling zone at an upper locus thereof.

4,374,751
POLYMERIZATION INITIATOR COMPOSITIONS

Charles D. Dudgeon, Clifton Park, N.Y., assignor to General Electric Company, Schenectady, N.Y.
Filed Aug. 8, 1980, Ser. No. 176,723
Int. Cl.³ B01J *31/02*
U.S. Cl. 252—426 **16 Claims**

1. A composition comprising an admixture of a polymerization initiator which is a radiation sensitive onium salt having the formula:

$$[[R_aX]_b{}^{+}[C]^{-b}](R_aX)_b{}^{+}(C)^{-b}$$

wherein:
each R is a monovalent organic aromatic radical;
X is selected from the group consisting of sulfur and iodine;
C is a Bronsted Acid polymerization catalyst precursor;
a equals the absolute value of (the valence number of X minus 1); and
b equals the absolute value of the valence number of C; in combination with an amount of a peroxide compound effective to activate said polymerization initiator.

4,374,752
CATALYST AND PROCESS FOR THE CONVERSION OF METHANOL TO ACETALDEHYDE

Benny J. Argento, South Charleston, W. Va.; Wellington E. Walker, deceased, late of Sissonville, W. Va. by Maxine M. Walker, executrix, and Rocco A. Fiato, Scotch Plains, N.J., assignors to Union Carbide Corporation, Danbury, Conn.
Filed Jun. 30, 1981, Ser. No. 279,158
Int. Cl.³ C07C *45/49;* **B01J** *27/08*
U.S. Cl. 252—429 R **15 Claims**

1. A catalyst system for the production of acetaldehyde by the reaction of methanol, carbon monoxide and hydrogen, which catalyst comprises (I) a source of cobalt, (II) a source of iodide or bromide, (III) an inert oxygen-containing diluent, and (IV) a trivalent phosphorus compound of the formula:

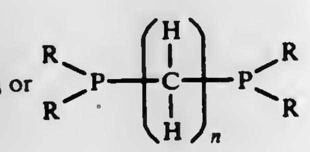

wherein each R group taken individually is similar or different, and is; (a) a saturated or unsaturated, linear or branched alkyl group having from 1 to 20 carbon atoms, or (b) an aryl, aralkyl, or alkaryl group having from 6 to 10 ring carbon atoms, or (c) a saturated or unsaturated cycloalkyl having from 5 to 8 ring carbon atoms, or (d) when two such R groups are attached to the same phosphorus atom and taken together, a saturated or unsaturated divalent alkyl group having from 4 to 10 carbon atoms; and wherein n is an integer from 2 to 10, and wherein the inert diluent to methanol volume ratio is from 0.3:1 to 20:1, the cobalt concentration is from 1 to 40 milligram-atoms of cobalt per gram-mole of methanol charged, the halide to cobalt milligram-atom ratio is from 1:1 to 10:1; and the phosphorus to halide milligram-atom ratio is from 0.1:1 to 2.8:1.

4,374,753
POLYMERIZATION CATALYST AND METHOD

Thomas J. Pullukat, Hoffman Estates, and Raymond E. Hoff, Palatine, both of Ill., assignors to Chemplex Company, Rolling Meadows, Ill.
Filed Jul. 29, 1981, Ser. No. 287,950
Int. Cl.³ B01J *31/38, 31/02*
U.S. Cl. 252—429 B **41 Claims**

1. A solid catalyst for use with an alkyl or aryl aluminum cocatalyst in the polymerization and copolymerization of 1-olefins, and prepared by:
(1) reacting an organic silicon compound with silica or alumina having surface hydroxyl groups or a mixture thereof, said silicon compound being reactive with said surface hydroxyl groups;
(2) reacting the product of (1) with a Group IIA organometallic compound;
(3) reacting the product of (2) with an alcohol; and
(4) reacting the product of (3) with a halide or alkoxide of titanium, vanadium, zirconium or mixtures of these.

4,374,754
SELF-CLEANING COATING COMPOSITIONS AND COOKING APPARATUS COATED THEREWITH

Nobushige Arai, Nara, Japan, assignor to Sharp Kabushiki Kaisha, Osaka, Japan
Continuation-in-part of Ser. No. 57,106, Jul. 12, 1979, abandoned. This application Jan. 30, 1981, Ser. No. 229,522
Claims priority, application Japan, Jul. 17, 1978, 53-87424; Jul. 27, 1978, 53-92388
Int. Cl.³ B01J *31/06, 21/12*
U.S. Cl. 252—430 **54 Claims**

1. A composition for a self-cleaning coating which catalytically oxidizes and removes fats and oils deposited on said coating, comprising:
(a) at least one silicone synthetic resin binder selected from the group consisting of straight silicone resins, silicone resins copolymerized with alkyds, silicone resins copolymerized with epoxy, and silicone resins copolymerized with acrylics;
(b) an organic solvent; and
(c) a thermostable oxidation catalyst mixed within said silicone synthetic resin and said organic solvent.

2. The self-cleaning coating composition according to claim 1, wherein said oxidation catalyst includes at least one oxidation catalyst material selected from a metal material and a metal oxide.

5. The self-cleaning coating composition according to claim 2, wherein said metal oxide is selected from the group consisting of manganese oxide, copper oxide, iron oxide, nickel oxide and chrome oxide.

4,374,755
MAGNESIUM DISILOXIDE COMPOUNDS

Charles T. Berge; Mark P. Mack, and Charles M. Starks, all of Ponca City, Okla., assignors to Conoco Inc., Ponca City, Okla.
Filed Jun. 26, 1981, Ser. No. 277,583
Int. Cl.³ C07F *7/04, 7/08;* **B01J** *31/12*
U.S. Cl. 252—431 R **12 Claims**

1. A method of preparing a magnesium disiloxide of the general formula

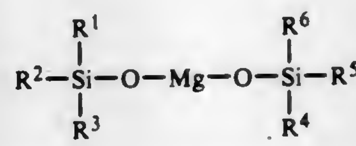

by contacting a silanol of the general formula

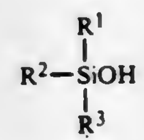

with magnesium metal in an inert solvent, allowing reaction to occur, then recovering magnesium disiloxide, wherein R^1, R^2, R^3, R^4, R^5, and R^6 are, independently, hydrogen, alkyl groups, cycloalkyl groups, alkaryl groups, aralkyl groups, aryl groups or bicycloalkyl groups.

4,374,756

VANADIUM-HYDROGEN-PHOSPHORUS-OXYGEN CATALYTIC MATERIAL

Philip H. Harju, Spring Church, and Eugene A. Pasek, Export, both of Pa., assignors to Koppers Company, Inc., Pittsburgh, Pa.

Filed Sep. 9, 1981, Ser. No. 300,710

Int. Cl.³ B01J *27/14*

U.S. Cl. 252—435 **24 Claims**

1. Catalyst for partial oxidation of hydrocarbons, said catalyst comprising vanadium, non-water-contained hydrogen, phosphorus and non-water-contained oxygen, said vanadium present as a mixture of vanadium of plus 4 valence and vanadium of plus 5 valence, and at least a portion of said phosphorus and said non-water-contained oxygen present in a pyrophosphate group.

4,374,757

CATALYST AND PROCESS FOR PRODUCING METHACRYLIC ACID

Sargis Khoobiar, Kinnelon, N.J., assignor to The Halcon SD Group, Inc., New York, N.Y.

Filed Dec. 26, 1978, Ser. No. 973,354

Int. Cl.³ B01J *27/14;* **C07C** *51/16*

U.S. Cl. 252—437 **1 Claim**

1. A cataylst composition suitable for the vapor-phase oxidation of methacrolein to produce methacrylic acid having the formula $Mo_aCu_bP_cSb_dCs_eO_f$ where: a=12; b=0.05–3; c=0.1–5; d=0.01–3; e=0.1–3; and f=value determined by the valence and proportions of the other elements of the formula.

4,374,758

PREPARATION OF STABLE TELLURIUM-CONTAINING SOLUTION FROM METALLIC TELLURIUM AND PROCESS FOR PRODUCING TELLURIUM-ANTIMONY CONTAINING OXIDE CATALYST USING SAID SOLUTION

Yutaka Sasaki, Yokohama, and Yoshimi Nakamura, Kawasaki, both of Japan, assignors to Nitto Chemical Industry Co., Ltd., Tokyo, Japan

Filed Mar. 12, 1981, Ser. No. 243,109

Claims priority, application Japan, Mar. 12, 1980, 55-30275

Int. Cl.³ B01J *27/02, 27/24;* **C01B** *19/00*

U.S. Cl. 252—439 **27 Claims**

1. A process for preparing a stable tellurium-containing solution from metallic tellurium by dissolving metallic tellurium by reaction with hydrogen peroxide in the presence of at least one reaction accelerator selected from the group consisting of (A) an ammonium ion, (B) an alkali metal ion, and (C) an oxide, oxyacid, or oxyacid salt of at least one element selected from the group consisting of vanadium, molybdenum, and tungsten.

4,374,759

CATALYSTS AND PROCESS FOR UNSATURATED ALDEHYDES

Sargis Khoobiar, Kinnelon, N.J., assignor to The Halcon SD Group, Inc., New York, N.Y.

Continuation of Ser. No. 939,645, Sep. 5, 1978, abandoned. This application Dec. 7, 1981, Ser. No. 327,848

Int. Cl.³ B01J *23/82, 21/00*

U.S. Cl. 252—455 R **7 Claims**

1. A catalyst composition suitable for the vapor-phase oxidation of isobutylene and/or tertiary butyl alcohol to produce methacrolein consisting essentially of the oxides of molybdenum, cobalt, iron, bismuth, thallium, antimony, silicon, nickel, and a member of the group consisting of the alkali metals, the alkaline earth metals, the rare earth metals including lanthanum, tungsten, and mixtures thereof and having a BET surface area between about 0.5 and about 10 square meters per gram of catalyst.

5. A catalyst composition suitable for the vapor-phase oxidation of isobutylene and/or tertiary butyl alcohol to produce methacrolein containing molybdenum, cobalt, iron, bismuth, thallium, antimony, and silicon wherein the improvement comprises adding catalytically effective amounts of nickel and, a member of the group consisting of alkali metals, the alkaline earth metals, the rare earth metals including lanthanum, tungsten, and mixtures thereof, and calcining said catalyst before use in said oxidation at a temperature of at least 525° C. in air for a sufficient period of time to reduce the BET surface area to the range of about 0.5–10 m²/gm.

4,374,760

ELECTRO CONDUCTIVE POLYMER COMPOSITIONS AND NEW MATERIALS FOUND USEFUL IN THEIR PREPARATION

Harold Charles, 14 Bisset Dr., West Milford, N.J. 07480

Filed Sep. 12, 1980, Ser. No. 186,421

Int. Cl.³ H01B *1/06*

U.S. Cl. 252—518 **24 Claims**

1. An electroconductive composition comprising from 10 wt. % to 95 wt. % of an electrically conductive particulate, from 4 wt. % to 90 wt. % of a polymer binder matrix, and from 0.01 wt. % to 5 wt. % based on the particulate weight content of an organo metallic additive selected from the group consisting of a compound represented by the formula;

$$(RO)_a(R^1O)_b\,M(C)_c(D)_d(E)_e$$

a compound represented by the formula II;

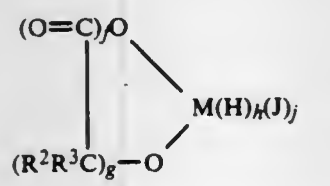

and mixtures of said components;

wherein M is selected from the group consisting of aluminum, titanium and zirconium;

a and b are each 0,1 or 2 but a+b must equal 1 or 2; c,d & e are each 0,1,2 or 3 but c+d must equal 3−(a+b) when M is aluminum; and

c+d+e must equal 4−(a+b) when M is titanium or zirconium;

f=0 or 1;

g=1,2 or 3 but f+g equals 2 or 3;

h and j are each 0, 1 or 2 but j+h=1 when M is aluminum and j+h=2 when M is titanium or zirconium;

R and R¹ are each selected from the group consisting of alkyl groups having from 1 to 12 carbon atoms, alkenyl groups having from 2 to 12 carbon atoms, and aralkyl groups having from 7 to 12 carbon atoms;

C,D,E,H and J are each monovalent ligands selected from the group consisting of monosubstituted amino, disubstituted amino, trisubstituted amino, alkanols having from 1 to 18 carbon atoms, arylalcohols having from 6 to 12 carbon atoms, alkenols having from 1 to 18 carbon atoms, and ester pyrophosphates having the generic formula;

$$-OP(O)(OR^5)OP(OR^6)(OR^7)(O)$$

wherein R⁵, R⁶ and R⁷ are selected from the primary group consisting of alkyl groups having from 1 to 12 carbon atoms, alkenyl groups having from 2 to 18 carbon atoms, aryl groups having from 7 to 12 carbon atoms, aralkyl groups having from 7 to 12 carbon atoms; or wherein any two of said R⁵, R⁶ and R⁷ is selected from said primary group and the remainder of R⁵, R⁶ and R⁷ is selected from a secondary group consisting of hydrogen, an amine having the formula;

$$NR^3, R^9, R^{10}, R^{11}$$

wherein R⁸, R⁹, R¹⁰ and R¹¹ are each selected from the group consisting of hydrogen, alkyl groups having from 1 to 12 carbon atoms, alkenyl groups having from 2 to 12 carbon atoms, and aralkyl groups having from 7 to 12 carbon atoms; and a phosphate having the formula;

$$HP(OR^{12})(OR^{13})(OR^{14})$$

wherein R¹² is selected from the group consisting of hydrogen, alkyl groups having from 1 to 12 carbon atoms, alkenyl groups having from 2 to 12 carbon atoms and aralkyl groups having from 7 to 12 carbon atoms and R¹³ and R¹⁴ are each selected from the group consisting of alkyl groups having from 1 to 12 carbon, alkenyl groups having from 2 to 12 carbon atoms and aralkyl groups having from 7 to 12 carbon atoms; and wherein R¹², R¹³, and R¹⁴ may be taken together to form a ring structure bonded to HP.

4,374,761

INERT ELECTRODE FORMULATIONS

Siba P. Ray, Plum Boro, Pa., assignor to Aluminum Company of America, Pittsburgh, Pa.

Filed Nov. 10, 1980, Ser. No. 205,653

Int. Cl.³ H01B *1/06*

U.S. Cl. 252—519 **7 Claims**

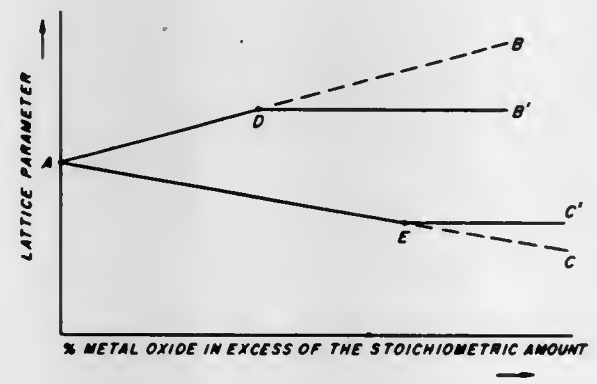

1. A composition suitable for fabricating into an inert electrode for use in the electrolytic production of metal from a metal compound dissolved in a molten salt, the composition comprising:

(a) a combination metal compound defined by the formula:

$$\left\{\sum_{j=1}^{m}(M_i)F_{M_i}\right\}\left\{\sum_{j=1}^{p}(M_j)F_{M_j}\sum_{i=1}^{m}(M_i)F_{M_i}\right\}_Z\left(\sum_{r=1}^{n}X_rF_{x_r}\right)_K$$

where

$$\sum_{i=1}^{m}F_{M_i}=1;\ \sum_{j=1}^{p}F_{M_j}+\sum_{i=1}^{m}F_{M_i}=1 \text{ and } \sum_{r=1}^{n}X_rF_{x_r}=1;$$

z is a number in the range of 1.0 to 2.2; K is a number in the range of 2.0 to 4.4; M_i is at least one metal having a valence of 1, 2, 3, 4 or 5 and is the same metal or metals when M_i is used in the composition; M_j is a metal having a valence of 2, 3 or 4, M_i and M_j being different metals; X_r is at least one of the elements from the group consisting of O, F, N, S, C and B; m, p and n are the number components which comprise M_i, M_j and X_r; F_{M_i}, F'_{M_j}, F'_{M_i} or F_{x_r} are the mole fractions of M_i, M_j and X_r and $0<F'_{M_i}<1$; and

(b) at least one metal powder dispersed through the combination metal compound for purposes of increasing its conductivity, the metal powder selected from the group consisting of Ni, Co, Fe, Cu, Pt, Rh, In and Ir and alloys thereof, the metal powder provided in a particle size of not greater than −10 mesh (Tyler Series) for dispersing in the combination metal compound and constituting up to about 30 vol.% of the composition.

4,374,762

PROCESS FOR THE REMOVAL OF TRITIUM FROM THE PRODUCT SOLUTIONS OBTAINED BY THE PUREX PROCESS

Rainer Olinger, Hagen, and Andre van den Bossche, Werl, both of Fed. Rep. of Germany, assignors to Uhde GmbH, Dortmund, Fed. Rep. of Germany

Filed Jun. 4, 1980, Ser. No. 156,358

Claims priority, application Fed. Rep. of Germany, Jun. 10, 1979, 2929167

Int. Cl.³ C01F *13/00, 15/00*

U.S. Cl. 252—631 **7 Claims**

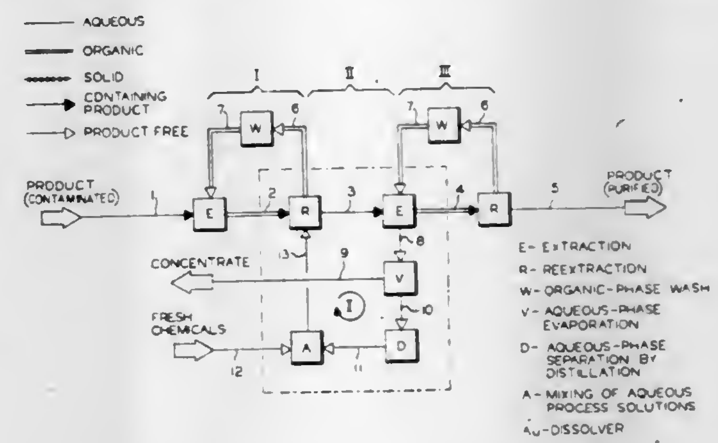

1. A method for the removal of tritium from a product solution obtained in the reprocessing of irradiated nuclear fuel by the PUREX process, said method comprising the steps of subjecting a plurality of aqueous solutions of the product to a plurality of successive extractions with a water-immiscible solvent to produce a plurality of successively less contaminated solutions of the fuel in the water-immiscible solvent and a plurality of aqueous tritium extracts, separating each of the immiscible solvent solutions from its associated tritium extract, subjecting a plurality of the immiscible solvent solutions of the fuel to re-extraction to produce the aqueous solution of the fuel which is subjected to each of the next successive extractions, purifying a plurality of the aqueous tritium extracts, and using the tritium extract separated from one of the immiscible solvent solutions and purified to re-extract the next more contaminated immiscible solvent solution.

4,374,763

METHOD FOR PRODUCING GAMMA-GLOBULIN FOR USE IN INTRAVENOUS ADMINISTRATION AND METHOD FOR PRODUCING A PHARMACEUTICAL PREPARATION THEREOF

Takashi Takagi, Shiga, Japan, assignor to Morishita Pharmaceutical Co., Ltd., Osaka, Japan

Filed Aug. 28, 1980, Ser. No. 181,972

Claims priority, application Japan, Sep. 17, 1979, 54-120357; Jul. 30, 1980, 55-105618

Int. Cl.³ C07G *7/00*

U.S. Cl. 260—112 B **1 Claim**

1. A process for producing gamma-globulin suitable for use in intravenous administration and of an anticomplementary activity of lower than 20% ($C'H_{50}$ value) comprising, bringing Cohn's Fraction II for said gamma-globulin into suspension in an aqueous solution of a monosaccharide, disaccharide or sugar alcohol, adjusting the pH of said suspension to 7.0 to 9.0, adding dextran of an average molecular weight of 10,000 to 70,000 into said suspension to produce an aqueous 2 to 10% wt./vol. solution of dextran, and after removing the thus formed precipitate, adding ammonium sulfate to the mother liquor to precipitate said gamma-globulin.

4,374,764
MACROLIDE ANTIBIOTIC

Mamoru Arai; Tatsuo Haneishi, and Mutsuo Nakajima, all of Hiromachi, Japan, assignors to Sankyo Company, Limited, Tokyo, Japan

Filed Oct. 21, 1980, Ser. No. 199,238
Claims priority, application Japan, Nov. 1, 1979, 54/141650
The portion of the term of this patent subsequent to Jun. 22, 1999, has been disclaimed.
Int. Cl.[3] **C07C** *103/52*
U.S. Cl. 260—112.5 R **3 Claims**

1. Compounds of the formula (I):

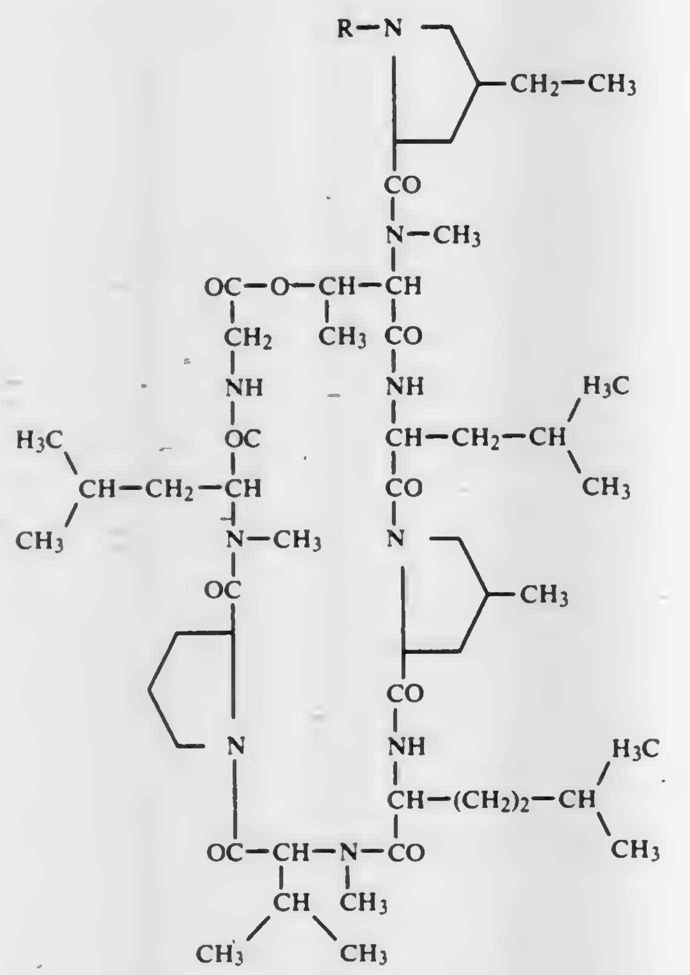
(I)

wherein R represents a hydrogen atom or an N-(α-hydroxybutyryl)-N-methylvalyl group.

4,374,765
MAMMALIAN COLLAGENASE INHIBITORS

William H. McGregor, Malvern, Pa., assignor to American Home Products Corporation, New York, N.Y.

Filed Oct. 7, 1981, Ser. No. 309,368
Int. Cl.[3] **C07C** *103/52;* **A61K** *37/00*
U.S. Cl. 260—112.5 R **2 Claims**

1. A compound of the formula:

R-Gly-L-Cys-Gly-L-Glu-L-Glu-NH_2

in which

R is hydrogen, alkanoyl of 2 to 6 carbon atoms, cycloalkylcarbonyl of 6 to 8 carbon atoms or alkoxycarbonyl of 2 to 6 carbon atoms;

or a pharmaceutically acceptable salt thereof.

4,374,766
COMBINED ALLANTOIN-HYDROLYZED ANIMAL PROTEIN PRODUCT AND METHOD

Eugene Puchalski, Jersey City; Frances A. Donahue, Middletown, and Richard P. Dixon, Aberdeen, all of N.J., assignors to Charles of the Ritz Group Ltd., New York, N.Y.

Filed Jun. 1, 1982, Ser. No. 383,404
Int. Cl.[3] **C07G** *7/00;* **C08H** *1/06*
U.S. Cl. 260—123.7 **9 Claims**

1. A stable form of allantoin which remains in aqueous-alcoholic solution over extended periods of time, comprising a combined allantoin-hydrolyzed animal protein product.

4,374,767
SUBSTITUTED ETHER OR THIOETHER ISOTHIAZOLE AZO DYES

Max A. Weaver, and Jean C. Fleischer, both of Kingsport, Tenn., assignors to Eastman Kodak Company, Rochester, N.Y.

Continuation of Ser. No. 966,173, Dec. 4, 1978, abandoned. This application Aug. 11, 1980, Ser. No. 177,151
Int. Cl.[3] **C07C** *107/04;* **C09B** *29/039, 29/06, 29/26*
U.S. Cl. 260—158 **6 Claims**

1. Azo compounds of the formula:

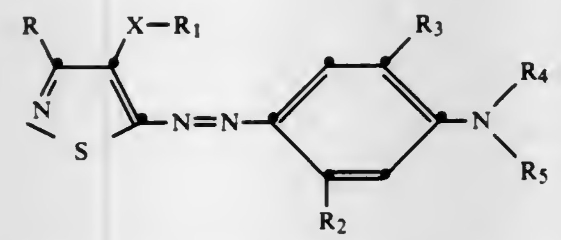

wherein R is lower alkyl or phenyl; X is O or S; R_1 is selected from lower alkyl, cyclohexyl, and phenyl wherein said lower alkyl is unsubstituted or substituted with 1-3 of —OH, Cl, Br, aryl, aryloxy, lower alkanoyloxy, lower alkoxy, or lower alkoxy substituted with —OH, Cl, Br, or lower alkoxy, and wherein said phenyl is unsubstituted or substituted with Cl, Br, lower alkoxy, or lower alkyl, and when X is S, R_1 is further selected from pyridyl, pryimidinyl, benzothiazolyl, benzoxazolyl, benzimidazolyl, azolyl radicals having the formula

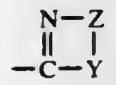

wherein Y is an oxygen or sulfur atom and Z is an ethylenically unsaturated group of two carbon atoms or of a nitrogen and a carbon atom, wherein said azolyl radicals may be substituted with lower alkyl, phenyl, or phenyl substituted as above for R_1; R_2 is selected from hydrogen, lower alkyl, lower alkoxy, formamido, lower alkoxycarbonylamino, lower alkanoylamino, lower alkanoylamino substituted with cyano, lower alkoxy, lower alkoxycarbonyl, phenoxy, or phenyl, phenoxy, halogen substituted phenoxy, cycloalkylcarbonyl, and lower alkylsulfonyl; R_3 is H, or lower alkyl; and R_4 and R_5 are independently selected from H, alkyl of 1-8 carbons, cyclohexyl, phenyl, lower alkoxycarbonyl substituted phenyl, and lower alkyl substituted with cyclohexyl, lower alkanoyloxy, lower alkoxycarbonyl, succinimido, lower alkanoylamino, lower alkylsulfonylamino, lower alkyl sulfonyl, sulfamoyl, carbamoyl, hydroxy, pyrrolidono, phthalimido, aryl, cyano, aryloxy, lower alkoxycarbonyloxy, lower alkoxy, phenoxy, or lower alkoxyalkoxy.

4,374,768
DISPERSE DYES FROM 5-AMINO-4-HALO-3-METHYLISOTHIAZOLES

Jean C. Fleischer; Gary T. Clark, and Ronald J. Maner, all of Kingsport, Tenn., assignors to Eastman Kodak Company, Rochester, N.Y.

Continuation of Ser. No. 159,422, Jun. 16, 1980, abandoned, which is a continuation of Ser. No. 970,072, Dec. 18, 1978, abandoned. This application Apr. 16, 1981, Ser. No. 254,705
Int. Cl.[3] **C09B** *29/22*
U.S. Cl. 260—158 **3 Claims**

1. Monoazo dyes of the general formula:

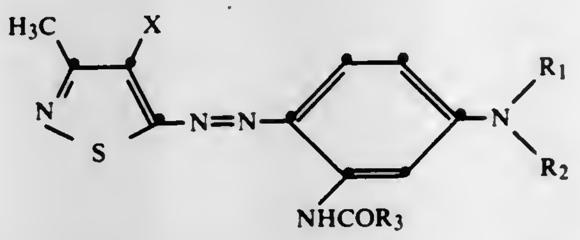

wherein R_1 and R_2 are each selected from lower alkyl, cyclohexyl, and alkyl substituted with carbamoyl, sulfamoyl, —CN, phenyl, succinimido, —$N(SO_2CH_3)CH_2C_6H_5$, lower alkoxy, lower alkoxyalkoxy, lower alkanoylamino, hydroxy substituted lower alkoxy, hydroxy, phthalimido,

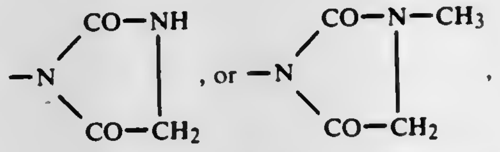

and wherein only one of R_1, and R_2 can be unsubstituted alkyl; R_3 is lower alkyl, lower alkyl substituted as above, phenyl, or trifluoromethyl; and X is chlorine or bromine.

4,374,769
WATER-SOLUBLE TRIS PHENYL BISAZO DYES FOR POLYAMIDE FIBERS

Ralph R. Giles, and Max A. Weaver, both of Kingsport, Tenn., assignors to Eastman Kodak Company, Rochester, N.Y.

Filed Jun. 17, 1981, Ser. No. 274,599
Int. Cl.[3] **C09B** *29/26, 29/085, 31/062;* **D06P** *3/24*
U.S. Cl. 260—187 **6 Claims**

1. A dye of the formula:

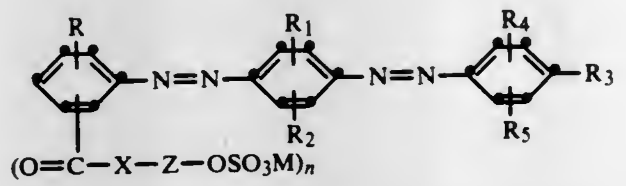

wherein X is —O—, —NH—, —N(alkyl)—, or —N(aryl)—; Z is selected from straight or branched-chain alkylene, —C_2H_4—O—C_2H_4—, —$C_2H_4CONHC_2H_4OC_2H_4$—, and —$C_2H_4NHC_2H_4$—; M is H, Na, K or NH_4; n is 1 or 2; R_3 is —OH, alkoxy or —NR_8R_9 wherein R_8 and R_9 are independently selected from H and alkyl and when either R_4 or R_5 is hydroxy or alkoxy ortho to the azo radical, R_3 is further selected from hydrogen, halogen, alkyl, and aryl; R, R_1, R_2, R_4, and R_5 are the same or different groups selected from hydrogen, halogen, hydroxyl, alkyl, aryl, alkoxy and alkanoylamino; with the proviso that when R_3 is neither —OH, alkoxy, nor —NR_8R_9, one of R_4 and R_5 is either hydroxy or alkoxy ortho to the azo radical; and wherein these alkyl, alkylene, alkoxy and aryl moieties are unsubstituted or substituted with one to three substituents selected from hydroxy, halogen, cyano, succinimido, cyclohexyl, alkyl-sulfonyl, alkylthio, alkanoyl, alkanoyloxy, amino, alkylamino, dialkylamino, arylamino, furyl, alkoxy, phenoxy, alkanoylamino, sulfamoyl, alkylsulfamoyl, dialkylsulfamoyl, phenyl and phenyl substituted with alkyl, alkoxy, halogen, alkanoylamino, cyano or alkoxycarbonyl, —$COOR^6$ wherein R^6 is selected from alkyl and alkyl substituted with halogen, hydroxy, phenoxy, aryl, cyano, cycloalkyl, alkylsulfonyl, alkylthio, alkanoyloxy or alkoxy, and $OCOR^7$ wherein R^7 is alkyl.

4,374,770
PROCESS FOR PREPARATION OF AROMATIC ACID CHLORIDES

John A. Hyatt, and David S. Kashdan, both of Kingsport, Tenn., assignors to Eastman Kodak Company, Rochester, N.Y.

Filed Oct. 8, 1981, Ser. No. 309,664
Int. Cl.[3] **C07C** *107/06, 51/58*
U.S. Cl. 260—207.1 **20 Claims**

1. Process for preparation of a compound having the formula

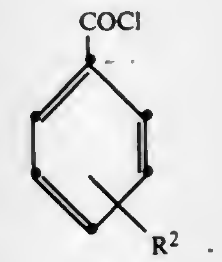

which comprises reacting an aromatic aldehyde having the formula

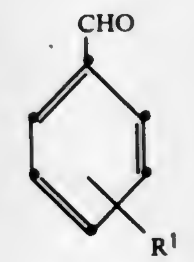

with sulfuryl chloride, wherein R^1 is selected from the group consisting of hydrogen and alkyl of up to 8 carbon atoms, —(C_6H_4)—CH_3, —CHO and Z, wherein Z is an electron withdrawing group selected from the group consisting of —CN, —COCl, —$SO_2(C_6H_5)$, —$SO(C_6H_5)$, —N=N—C_6H_5 and —CO_2R^7 wherein R^7 is alkyl of up to 8 carbon atoms; R^2 is selected from the group consisting of hydrogen, alkyl of up to 8 carbon atoms, —(C_6H_4)—CH_3, —COCl and Z; the reaction being conducted in the presence of a catalytic amount of a compound having the formula

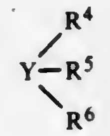

wherein Y is selected from the group consisting of P, P=0, and

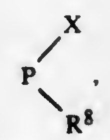

wherein X is selected from the group consisting of chlorine and bromine; R^8 is selected from the group consisting of chlorine, bromine and M; and M, R^4, R^5 and R^6 are independently selected from the group consisting of alkyl and haloalkyl

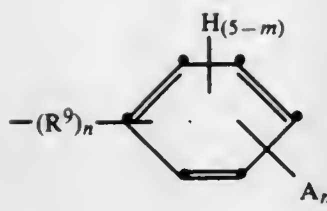

wherein R^9 is an alkylene group containing up to 8 carbon atoms, n is an integer from 0 to 1; A is selected from the group consisting of chlorine, bromine and alkyl and haloalkyl containing up to 8 carbon atoms, and m is an integer from 0 to 5.

4,374,771
BLOCKED ISOCYANATE
Balwant Singh, and Robert W. Novak, both of Stamford, Conn., assignors to American Cyanamid Company, Stamford, Conn.
Filed Mar. 8, 1982, Ser. No. 355,821
Int. Cl.^{3} C07D *403/12*
U.S. Cl. 260—239.3 R **3 Claims**

1. N,N'-methylenebis (hexahydro-2-oxo-1H-azepine-1-carboxamide).

4,374,772
PROCESS FOR THE PREPARATION OF N-FORMIMIDOYL THIENAMYCIN AND REAGENTS THEREFOR
George G. Hazen, Westfield; Ralph P. Volante, East Windsor, and Kenneth E. Wilson, Westfield, all of N.J., assignors to Merck & Co., Inc., Rahway, N.J.
Filed Mar. 19, 1981, Ser. No. 244,934
Int. Cl.^{3} C07D *487/04*
U.S. Cl. 260—245.2 T **1 Claim**

1. A process for preparing N-formimidoyl thienamycin comprising reacting:

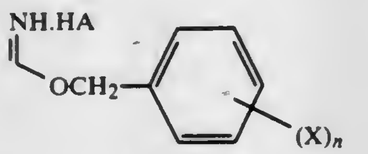

I

with

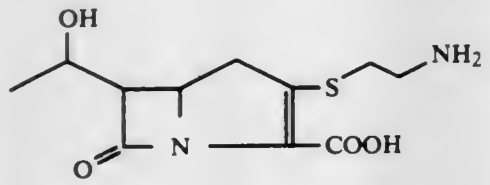

in water at a pH from 7 to 8.5; wherein A is an anion; X is independently selected from the group consisting of nitro, halo (chloro, bromo, fluoro, and iodo), loweralkyl having from one to six carbon atoms, phenyl, and phenylalkyl having from 7-12 carbon atoms, and —COOR, wherein R is hydrogen or loweralkyl having from one to six carbon atoms; and n is 0, 1 or 2.

4,374,773
TRIAZOLO-BENZODIAZEPINE DERIVATIVES
Quirico Branca, Birsfelden; Albert E. Fischli, Riehen, both of Switzerland, and Andre Szente, Dee Why, Australia, assignors to Hoffmann-La Roche Inc., Nutley, N.J.
Filed Jan. 16, 1981, Ser. No. 225,747
Claims priority, application Switzerland, Feb. 8, 1980, 1038/80
Int. Cl.^{3} A61K *31/55;* **C07D** *487/04*
U.S. Cl. 260—245.5 **15 Claims**

1. A compound of the formula

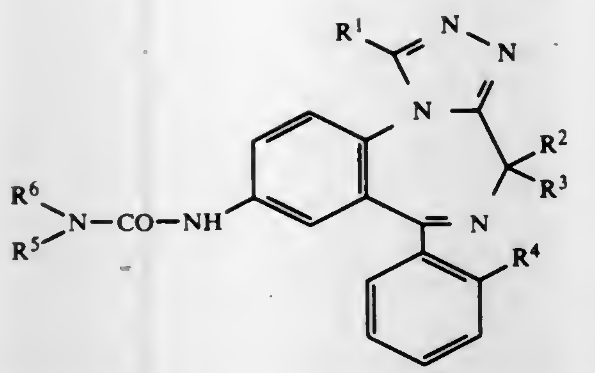

I

wherein R^1 is a hydrogen atom or a lower alkyl group, R^2 and R^3 each are a hydrogen atom or a lower alkyl group, R^4 is a halogen atom and either R^5 is a hydrogen atom or a lower alkyl group and R^6 is a lower alkyl or lower hydroxyalkyl group or R^5 and R^6 together with the nitrogen atom to which they are attached are a 3-membered to 7-membered heterocycle selected from the group consisting of aziridine, pyrrolidone and piperidine,

and pharmaceutically acceptable acid addition salts thereof.

13. A compound of the formula

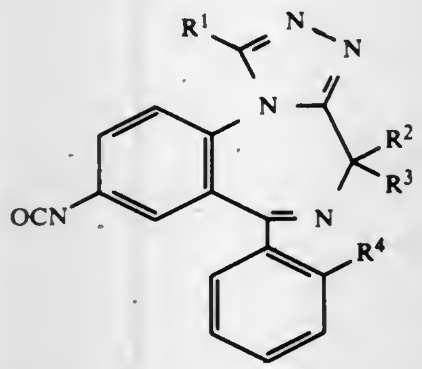

II

wherein R^1 is a hydrogen atom or a lower alkyl group, R^2 and R^3 each are a hydrogen atom or a lower alkyl group and R^4 is a halogen atom.

14. A compound of the formula

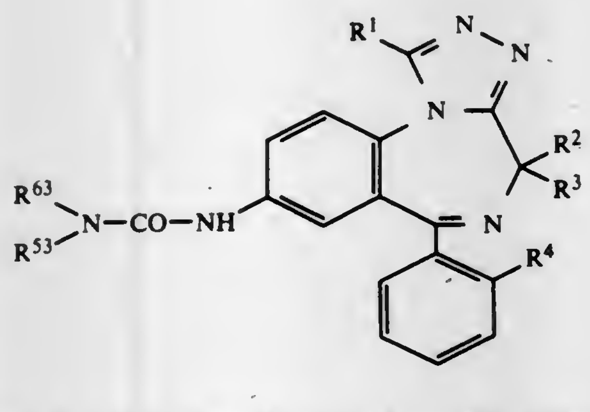

VII

wherein R^1 is a hydrogen atom or a lower alkyl group, R^2 and R^3 each are a hydrogen atom or a lower alkyl group, R^4 is a halogen atom and either R^{53} is a protecting group and R^{63} is a lower alkyl group or a group of the formula

—A—O—Y VIII

in which A is a lower alkylene group and Y is a protecting group, or R^{53} is a hydrogen atom or a lower alkyl group and R^{63} is as above.

15. A compound of the formula

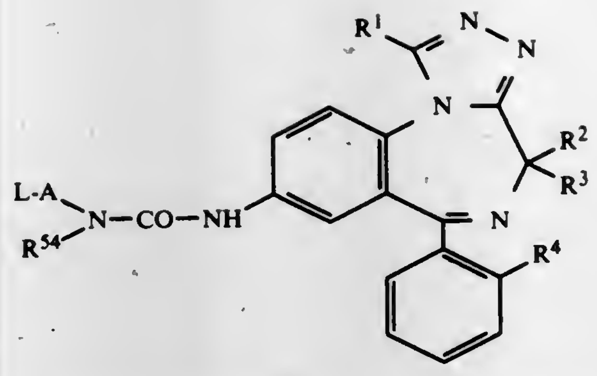

IX

wherein R^1 is a hydrogen atom or a lower alkyl group, R^2 and R^3 each are a hydrogen atom or a lower alkyl group, R^4 is a halogen atom, A is a lower alkylene group, R^{54} is a hydrogen atom or a lower alkyl group and L is a leaving group.

4,374,774
MITOMYCINS
Masaji Kasai, Fujisawa; Motomichi Kono, and Kunikatsu Shirahata, both of Machida, all of Japan, assignors to Kyowa Hakko Kogyo Co., Ltd., Tokyo, Japan
Filed Mar. 3, 1980, Ser. No. 126,346
Claims priority, application Japan, Mar. 13, 1979, 54/28250; Jun. 28, 1979, 54/80809
Int. Cl.^{3} C07D *487/02*
U.S. Cl. 548—422 **5 Claims**

1. A compound of the formula

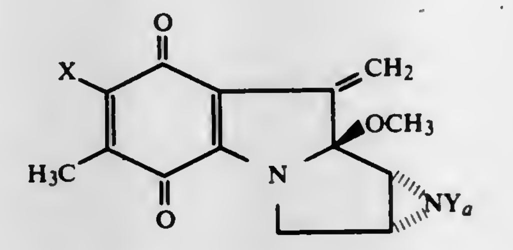

wherein Ya is a hydrogen atom or a methyl group and when Ya is a hydrogen atom, X is an amino group, an hydroxy group or an alkoxy group having 1-4 carbon atoms and when Ya is a methyl group, X is an hydroxy group.

4,374,775
PROCESS FOR PREPARING VITAMIN K
Karl H. Dötz, Vaterstetten, Fed. Rep. of Germany, assignor to Hoffmann-La Roche Inc., Nutley, N.J.
Division of Ser. No. 127,002, Mar. 4, 1980, Pat. No. 4,320,065. This application Nov. 9, 1981, Ser. No. 319,355
Claims priority, application Fed. Rep. of Germany, Mar. 8, 1979, 2909091; Switzerland, Jan. 15, 1980, 306/80
Int. Cl.^{3} C07C *97/18*
U.S. Cl. 260—396 K **3 Claims**

1. The process of producing a compound of the formula

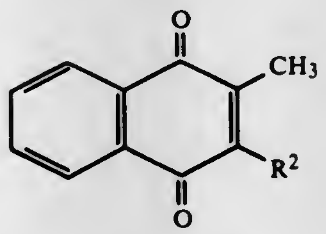

IV

wherein R^2 is dimethylallyl, geranyl, farnesyl or an analogous isoprenoid terpenyl residue or the phytyl residue comprising oxidizing a compound of the formula:

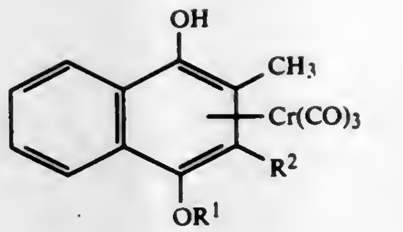

III

wherein R^1 is lower alkyl, acyl or benzyl and R^2 is as above with an oxidizing agent.

4,374,776
STEROL CONCENTRATES, THE PREPARATION THEREOF, AND THEIR USE IN THE TRANSFORMATION OF STEROLS BY FERMENTATION
Alfred Struve, Hilden; Frank F. Hill, Mettmann-Obschwarzbach, and Joachim Schindler, Hilden, all of Fed. Rep. of Germany, assignors to Henkel Kommanditgesellschaft auf Aktien, Düsseldorf-Holthausen, Fed. Rep. of Germany
Filed Sep. 2, 1980, Ser. No. 183,622
Claims priority, application Fed. Rep. of Germany, Sep. 7, 1979, 2936125
Int. Cl.^{3} C07J *9/00*
U.S. Cl. 260—397.25 **18 Claims**

1. A process for the preparation of a concentrate containing sterol compounds of natural origin, which concentrate is suitable as a starting material for the transformation of sterol compounds by fermentation, which comprises the steps of:

(a) transesterifying sterol-containing distillation residues from the processing of natural fats and/or oils with a lower alcohol; and

(b) subjecting the product of step (a) to molecular distillation to produce a main fraction having a content of up to about 50 percent by weight of sterol compounds.

4,374,777
SYNTHESIS OF HYDROCARBON SOLUBLE VANADIUM CATALYST
Ronald A. Henry, China Lake, Calif., and Arnold Adicoff, Burke, Va., assignors to The United States of America as represented by the Secretary of the Navy, Washington, D.C.
Filed Apr. 9, 1981, Ser. No. 252,712
Int. Cl.^{3} C11C *1/00*
U.S. Cl. 260—414 **1 Claim**

1. A process for the production of vanadium trineodecanoate to be used with a promoter as a catalyst comprising the steps of:

reducing vanadium pentoxide in an acidic solution of formic and hydrochloric acids to form a vanadium (III) solution;

heating said vanadium (III) solution under nitrogen for a period of time at 80°-90° C.;

adding neodecanoic acid, triethyl phosphate, paraformaldehyde and xylene to said heated vanadium (III) solution to form a heterogeneous solution;

heating said heterogeneous solution rapidly to reflux with stirring;

azeotropically distilling said heterogeneous solution under nitrogen to remove the aqueous phase; and

recovering said vanadium trineodecanoate in a xylene solution.

4,374,778
MONOALKYLFLUOROTIN COMPOUNDS
Hans Plum, Hamm, and Ulrich Schroeer, Kamen-Methler, both of Fed. Rep. of Germany, assignors to Schering Aktiengesellschaft, Berlin and Bergkamen, Fed. Rep. of Germany
Filed Jul. 6, 1981, Ser. No. 280,300
Claims priority, application Fed. Rep. of Germany, Aug. 1, 1980, 3029174
Int. Cl.[3] C07F *7/22*
U.S. Cl. 260—429.7 9 Claims

1. A monoalkylfluorotin compound of the formula

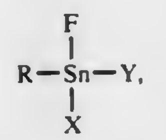

wherein R is alkyl having 1 to 12 carbon atoms, X taken alone is fluorine or carboxylate, Y taken alone is chlorine, carboxylate,

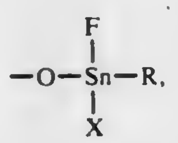

or wherein X and Y, taken together, are oxygen.

4,374,779
NITROSOAMINO-ACTONITRILES
Reinhardt P. Stein, Audubon, Pa., assignor to American Home Products Corporation, New York, N.Y.
Division of Ser. No. 264,892, May 18, 1981, Pat. No. 4,324,897, which is a continuation-in-part of Ser. No. 193,043, Oct. 2, 1980, Pat. No. 4,289,885. This application Nov. 16, 1981, Ser. No. 321,953
Int. Cl.[3] C07C *121/78*
U.S. Cl. 260—465 E 3 Claims

1. A compound of the formula:

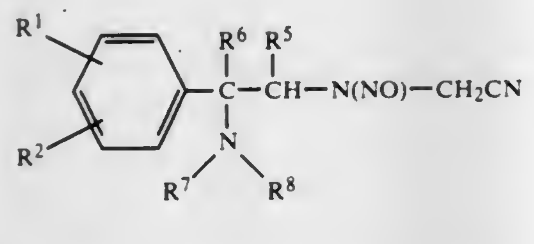

in which

R^1 and R^2 are, independently, hydrogen, alkyl of 1 to 6 carbon atoms, alkoxy of 1 to 6 carbon atoms, halo, perfluoroalkyl of 1 to 3 carbon atoms, nitro, alkanoyl of 2 to 4 carbon atoms, or alkoxycarbonyl of 2 to 4 carbon atoms;
R^5 and R^6 are, independently, hydrogen or methyl;
R^7 and R^8 are, independently, alkyl of 1 to 4 carbon atoms, or when taken with the nitrogen atom to which they are attached, form a piperidinyl, pyrolidinyl, morpholinyl, N-alkyl piperazinyl in which the alkyl group contains from 1 to 6 carbon atoms or N-phenylpiperazinyl group;
or a pharmaceutically acceptable salt thereof.

4,374,780
DI-2,4,4'-TRIMETHYLPENTYLPHOSPHINIC ACID AND ITS PREPARATION
Allan J. Robertson, Niagara, Canada, assignor to American Cyanamid Company, Stamford, Conn.
Filed May 14, 1981, Ser. No. 263,529
Int. Cl.[3] C07F *9/30*
U.S. Cl. 260—502.4 R 1 Claim

1. The compound di-2,4,4'-trimethylpentylphosphinic acid.

4,374,781
ALKYLATED PHOSPHAZENE OLIGOMERS AND METHOD OF PREPARATION
Harry R. Allcock, and Paul J. Harris, both of State College, Pa., assignors to The United States of America as represented by the Secretary of the Navy, Washington, D.C.
Division of Ser. No. 78,974, Sep. 25, 1979, Pat. No. 4,258,172. This application Nov. 3, 1980, Ser. No. 203,202
Int. Cl.[3] C07F *9/65*
U.S. Cl. 260—543 PN 5 Claims

1. A phosphazene oligomer having the formula: $(NP(X_2))_nNPRH$, wherein X represents chlorine or bromine, R represents a linear or branched alkyl, and n represents an integer from 2 to 8.

4,374,782
SYNTHESIS OF TRIFLUOROACETYL FLUORIDE
Louis G. Anello, Hamburg; Michael Van Der Puy, Cheektowaga; Martin A. Robinson, East Amherst, and Richard E. Eibeck, Orchard Park, all of N.Y., assignors to Allied Corporation, Morristown, N.J.
Filed Jun. 18, 1981, Ser. No. 275,009
Int. Cl.[3] C07C *51/58*
U.S. Cl. 260—544 F 10 Claims

1. A process for the preparation of trifluoroacetyl fluoride, which comprises reacting, in the liquid phase under substantially dry conditions and at elevated temperatures, hexafluorothioacetone dimer in an aprotic solvent containing at least a catalytic amount of an alkali metal fluoride with an oxidizing agent selected from the group consisting of oxides of Pb, Sn, Ni, Co and Fe and $M_2S_2O_8$ wherein M is an alkali metal.

4,374,783
O,O-DIALKYL-S-(2,3,4-TRICHLORO)BUTYL THIOPHOSPHATE
Seong T. Hwang, 6225 Garretson St., Burke, Va. 22015
Filed May 8, 1981, Ser. No. 261,888
Int. Cl.[3] C07F *9/165*
U.S. Cl. 260—963 2 Claims

1. O,O dimethyl S-(2,3,4 trichloro) butyl phosphorothioate.
2. O,O diethyl S-(2,3,4 trichloro) butyl phosphorothioate.

4,374,784
AIR AND MOISTURE INDUCTION SYSTEM
Calvin Kalishman, 5 Margaret Rd., Stoneham, Mass. 02180
Continuation of Ser. No. 213,819, Dec. 8, 1980, Pat. No. 4,313,740. This application Dec. 12, 1981, Ser. No. 233,991
Int. Cl.[3] F02M *25/00*
U.S. Cl. 261—18 A 7 Claims

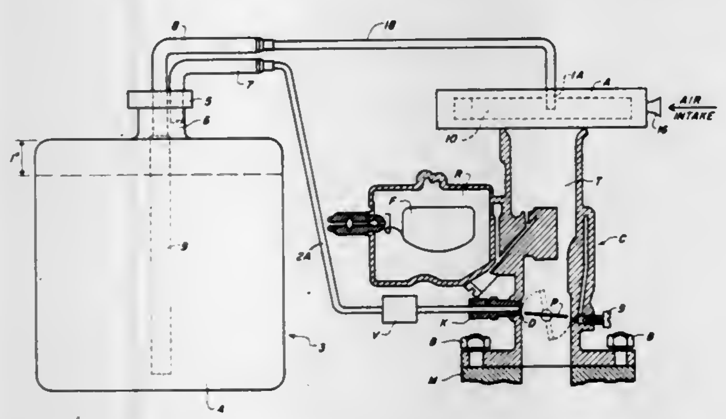

1. A system for increasing gasoline mileage and reducing pollutants in the emissions from a vehicle engine having combustion means including an engine carburetor, engine manifold and air filter associated with the carburetor, said system comprising:

means for securing the engine carburetor to the vehicle intake manifold in a position for downdraft operation,

a tank for holding a quantity of a liquid and having air inlet means and air outlet means,
a first coupling line coupled from the air filter receiving air under pressure for coupling directly to the air inlet means of the tank, whereupon the air passes through the liquid in the tank to provide liquid saturated air in the tank,
said tank having the liquid therein occupying less than the entire volume of the tank to thus leave a top air space over the liquid in which the liquid saturated air is formed,
a second coupling line coupling to the carburetor throat above but close to the throttle plate in the closed position thereof but within the radius of the throttle plate in the open position thereof, whereby when the plate is closed as at idle substantially no flow occurs via the second coupling line but upon opening the flow commences through the throat,
and a metering valve in said second coupling line for controlling the amount of saturated air feed to the throat of the carburetor,
said metering valve being of small orifice diameter having a maximum on the order of 0.060 inch wherein the air filter provides filtered air via the first coupling line to the tank, said air filter comprising a plurality of replacable cartridge filters, said filters each being of uniform density with different ones thereof having different porosity with the more dense filter disposed closer to an air inlet and the less dense filter disposed remote from the air inlet with said dense to less dense filters extending circumferentially whereby uniform air dispersion occurs through the filters.

4,374,785
METERING DEVICE FOR FUEL CONTROL SYSTEM
Charles E. Wyatt, Kennedyville, Md., assignor to Miletech, Inc., Greenville, Del.
Filed Jan. 21, 1981, Ser. No. 226,865
Int. Cl.[3] F02M *7/06*
U.S. Cl. 261—51 5 Claims

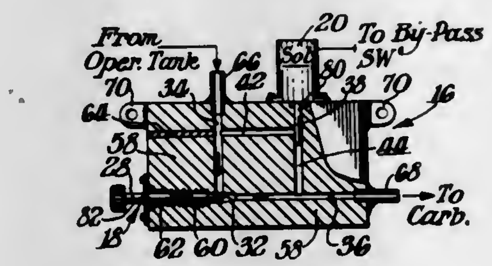

1. A metering device, in combination therewith, a fuel control system for use in a vehicle having a fuel line for supplying fuel to a carburetor, said metering device comprising a mounting block, a first pair of passageways extending into said block and exposed at one face of said block, said passageways terminating in closed ends within said block, a second pair of passageways extending into said block and intersecting said first pair of passageways, a main meter valve in one of said second pair of passageways with one of said pair of passageways being exposed from said block to comprise an outlet passageway, one of said first pair of passageways comprising an inlet passageway and the other of said first pair of passageways comprising a by-pass passageway, the other of said second pair of passageways comprising a by-pass branch interconnecting said inlet passageway and said by-pass passageway, a by-pass valve in said by-pass passageway for selectively closing flow communication between said inlet passageway and said by-pass passageway, an upstream portion of said fuel line being connected in flow communication with said inlet passageway, and a downstream portion of said fuelline connected in flow communication with said outlet passageway.

4,374,786
UNITIZED SCRUBBER TOWER
Robert W. McClain, Dallas, Tex., assignor to Glitsch, Inc., Dallas, Tex.
Filed Aug. 5, 1981, Ser. No. 290,148
Int. Cl.[3] B01D *47/12;* E04B *1/343;* B66C *1/32, 1/34*
U.S. Cl. 261—113 9 Claims

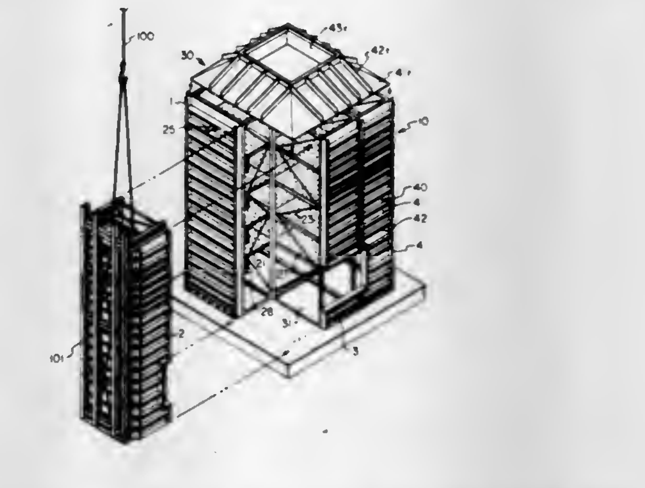

1. A rectangular scrubber tower for removing toxic gases and pollutants from relative high volume industrial exhausts; said tower being principally exteriorly supported at its perimeter, having means for mixing a scrubbing liquid with the exhaust; said tower comprising:

a. a plurality of prefabricated constituent subunits, a plurality of which are perimeter subunits, each said perimeter subunit comprising:
   (1) a perimeter wall section comprising:
      i. a corrosion resistant plate;
      ii. a rib framework attached to said plate whereby said plate is exteriorly reinforced; and
      iii. a plurality of horizontal support members attached to the interior of said plate;
   (2) at least one interior vertical support; and
   (3) additional substantially horizontal supports connecting said vertical support to said perimeter wall section;
b. a foundation upon which said tower is supported;
c. means for securing said constituent subunits to said foundation;
d. means to connect said constituent subunits to each other whereby a single functional scrubber tower is assembled from a plurality of said constituent subunits; said connection means comprising;
   (1) means for interconnecting the rib framework of adjacent perimeter constituent subunits; and
   (2) means for sealing the connection of adjacent perimeter wall sections;
e. an inlet through at least one of said perimeter wall sections whereby the exhaust bearing toxic gases and pollutants enters said scrubber tower;
f. a roof connected to an upper edge of said perimeter wall section of at least one of said perimeter subunits having a chimney whereby cleansed exhaust is released from the scrubber tower; and
g. a floor connected to each said perimeter wall section of at least one of said perimeter subunits between said foundation and the lowermost of said trays.

6. A scrubber tower for removing toxic gases and pollutants from relative high volume industrial exhausts; said tower being principally exteriorly supported at its perimeter, having means for mixing a scrubbing liquid with the exhaust; said tower comprising:

a. a plurality of prefabricated constituent subunits, a plurality of which are perimeter subunits, each said perimeter subunit comprising:
   (1) a perimeter wall section comprising:
      i. a corrosion resistant plate;
      ii. a rib framework attached to said plate whereby said plate is exteriorly reinforced; and

iii. a plurality of horizontal support members attached to the interior of said plate;
(2) at least on interior vertical support; and
(3) additional substantially horizontal supports connecting said vertical support to said perimeter wall section;
b. a foundation upon which said tower is supported;
c. means for securing said constituent subunits to said foundation;
d. means to connect said constituent subunits to each other whereby a single functional scrubber tower is assembled from a plurality of said constituent subunits; said connection means comprising;
(1) means for interconnecting the rib framework of adjacent perimeter constituent subunits; and
(2) means for sealing the connection of adjacent perimeter wall sections;
e. an inlet through at least one of said perimeter wall sections whereby the exhaust bearing toxic gases and pollutants enters said scrubber tower;
f. a roof connected to an upper edge of said perimeter wall section of at least one of said perimeter subunits having a chimney whereby cleansed exhaust is released from the scrubber tower; and
g. a floor connected to each said perimeter wall section of at least one of said perimeter subunits.

4,374,787
PRESSING CERAMIC POWDERS
Roy Stewart, Blackpool, England, assignor to British Nuclear Fuels Limited, Warrington, England
Filed Aug. 6, 1980, Ser. No. 175,864
Claims priority, application United Kingdom, Aug. 10, 1979, 7928000
Int. Cl.³ B30B *5/02, 11/02*
U.S. Cl. 264—0.5 **7 Claims**

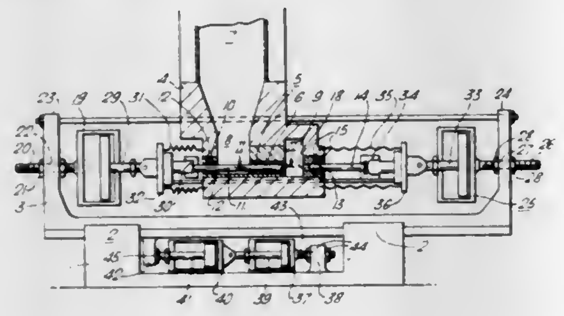

1. An improved press apparatus for forming bodies from ceramic powder having in combination a rigid die and means for applying mechanical pressure to powder within and contacting the die at least at one end of the die characterised in that the die is at least in part of fluid permeable material and means are provided for exerting hydrostatic pressure through a fluid medium permeating the die and contacting the powder while applying the mechanical pressure.

4,374,788
PROCESS FOR TREATMENT OF OLEFIN POLYMER FIBRILS
William H. Gonzales, Houston, Tex., assignor to Gulf Oil Corporation, Pittsburgh, Pa.
Filed Feb. 28, 1979, Ser. No. 16,239
Int. Cl.³ B29C *23/00*
U.S. Cl. 264—5 **9 Claims**

1. In a process in which olefin polymer fibrils are prepared by:
a. Cooling a hot olefin polymer solution under conditions of high shear to prepare fibrils,
b. Recovering the precipitated fibrils,
c. Refining the fibrils in the presence of a low molecular weight oxygen containing liquid, and
d. Treating the fibrils with an aqueous solution of polyvinyl alcohol to sorb at least 1 weight % of polyvinyl alcohol on the fibrils,

the improvement which consists of carrying out the refining step (c) at a subambient temperature not higher than about 10° C.

4,374,789
METALLIC PARTICLE GENERATION DEVICE
Earl N. Stuck, Wareham; Keith D. Pigney, Taunton, and Howard Gifford, Westport, all of Mass., assignors to Teledyne Industries, Inc., Los Angeles, Calif.
Filed Sep. 8, 1981, Ser. No. 300,224
Int. Cl.³ B01J *2/04*
U.S. Cl. 264—12 **6 Claims**

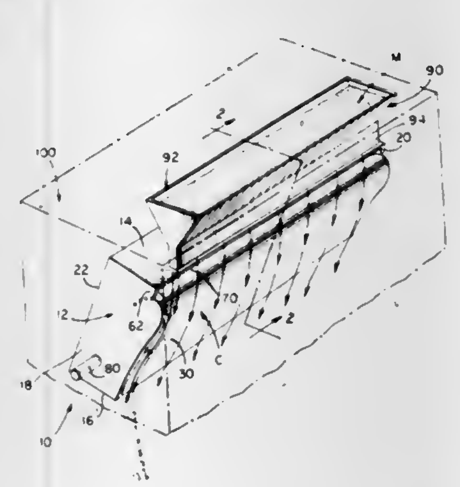

1. A process for producing metallic particles comprising steps of:
defining a Coanda surface;
flowing a first fluid along the Coanda surface;
locating a second fluid adjacent the Coanda surface, said first and second fluids being selected and located with respect to each other so that the flow of said first fluid influences said second fluid to flow in a direction which intersects said first fluid;
flowing a molten metal adjacent the Coanda surface;
locating the molten metal flow so that said molten metal flow is located between said first and second fluids so that said molten metal postpones but does not prevent the intersection of said first and second fluids; and
flowing said fluids and said molten metal to an intersection position whereat said first and second fluids intersect, said fluids and said molten metal intermixing thereby breaking up said molten metal flow into metallic particles.

4,374,790
METHOD AND APPARATUS FOR PUMPING CONCRETE TO FORM STRUCTURE AT ELEVATED HEIGHTS
Joseph L. McGowan, Harpenden, England, assignor to Marley Company, Mission, Kans.
Filed Jul. 8, 1980, Ser. No. 166,988
Int. Cl.³ E04B *11/16;* **E04G** *21/04*
U.S. Cl. 264—32 **9 Claims**

6. In a method of building a circular concrete structure using an annular form system into which concrete mix is poured as successive annuluses and the system is periodically raised in height comprising the steps of:
locating the annular form system in disposition for receipt of concrete mix in the open upper part thereof;
establishing an upright flow path of height related to the elevation of the form system and extending along a line in the central area of said form system;
providing a normally elevated essentially lateral flow path for the concrete mix and connected to the upright flow path;

supporting the lateral flow path from a level above the same and in a manner such that the lateral path is maintained in a vertically inclined disposition with the extremity thereof proximal to the upright flow path lower than the opposite outboard extremity of the lateral flow path,
said lateral flow path being of sufficient length to allow concrete mix flowing therealong to readily be directed into an adjacent area of the form system;
delivering concrete mix to the upright flow path on a substantially continuous basis for flow to the lateral path and thereafter to the form system;
diverting concrete mix from the outboard end of the lateral flow path into the annular form system; and
maneuvering the support for the lateral flow path while maintaining the inclination of the latter relative to the horizontal through a first arc in one angular direction

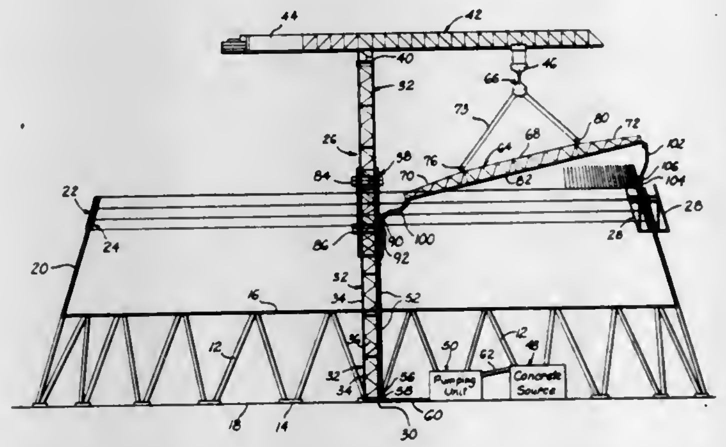

without changing the horizontal position of the upright flow path, of sufficient magnitude to allow diversion of concrete mix from said lateral path into at least approximately one-half of the circumferential extent of the annular form system and thence through a second arc in the opposite angular direction of sufficient extent to permit diversion of concrete mix from said lateral flow path into the remaining circumference of the annular form system and again without change in horizontal disposition of the upright flow path,
said lateral flow path being pivoted about an upright axis therethrough during swinging of the support therefor in opposite directions as necessary to ensure that concrete mix is directed into the form system throughout the entire circumferential extent thereof without interruption in supply of the mix.

4,374,791
PROCESS FOR PREPARING PARTICLEBOARD
William J. Farrissey, Northford; Alexander McLaughlin, Meriden, and Douglas P. Waszeciak, Hamden, all of Conn., assignors to The Upjohn Company, Kalamazoo, Mich.
Filed Sep. 28, 1981, Ser. No. 306,199
Int. Cl.³ B28B *7/04*
U.S. Cl. 264—39 **8 Claims**

1. In a process for the preparation of particle board wherein particles of material capable of being compacted are contacted with a polyisocyanate binder containing an internal release agent and the treated particles are subsequently formed into boards by the application of heat and pressure utilizing metal caul plates or platens, the impovement which comprises enhancing the release of the finished particle board from the metallic surfaces which come into contact with said particle board during said application of heat and pressure, by precoating said metallic surfaces with a layer of polytetrafluoroethylene.

4,374,792
SINTERING OF SILICON NITRIDE WITH BE ADDITIVE
Svante Prochazka, Ballston Lake, and Charles D. Greskovich, Schenectady, both of N.Y., assignors to General Electric Company, Schenectady, N.Y.
Continuation of Ser. No. 65,120, Aug. 9, 1979, abandoned. This application Aug. 27, 1981, Ser. No. 296,676
Int. Cl.³ C04B *35/58*
U.S. Cl. 264—65 **2 Claims**

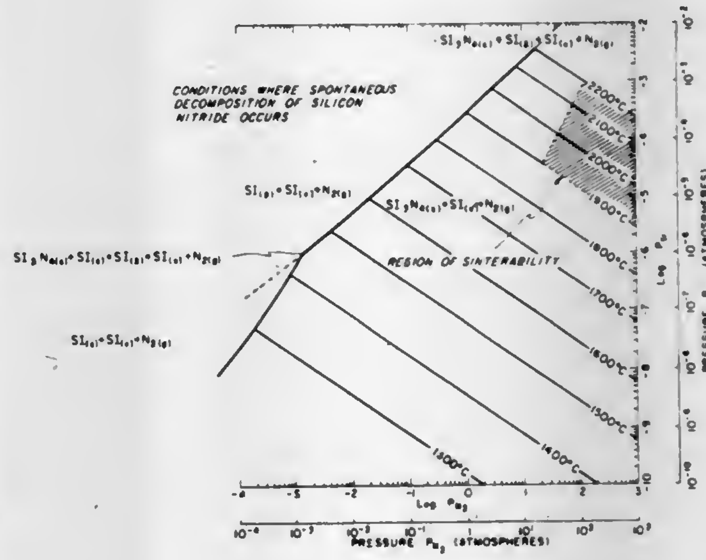

1. A method of producing a pre-shaped polycrystalline sintered body consisting of more than 99% by volume of β-silicon nitride containing oxygen and beryllium in solid solution with less than 1% by volume of said body being an amorphous glassy phase which consists essentially of providing a silicon nitride powder containing less than about 0.5% by weight metallic cation impurities based on the total weight of said silicon nitride powder, providing at least a significantly homogeneous dispersion having an average particle size which is submicron and which consists of said silicon nitride powder, oxygen and an additive consisting of a beryllium additive, said beryllium additive being selected from the group consisting of beryllium, beryllium oxide, beryllium carbide, beryllium fluoride, beryllium nitride, beryllium silicon nitride and mixtures thereof, said beryllium additive being used in an amount wherein the beryllium component is equivalent to from about 0.1% by weight to about 2% by weight of elemental beryllium based on the amount of silicon nitride, shaping said dispersion into a compact, said compact containing oxygen in an amount ranging from about 1.4% by weight to about 7% by weight of said silicon nitride, said compact containing increasing amounts of said oxygen with increasing amounts of said beryllium component, said compact containing about 7% by weight oxygen for an equivalent amount of said elemental beryllium of about 2% by weight, and sintering said compact at a temperature ranging from about 1900° C. to about 2200° C. in a sintering atmosphere of nitrogen, said nitrogen being at a superatmospheric pressure which at said sintering temperatures prevents significant thermal decomposition of said silicon nitride and produces a sintered body with a density of at least about 80% of the theoretical density of silicon nitride, the minimum pressure of said nitrogen ranging from about 10 atmospheres at a sintering temperature of about 1900° C. up to a pressure of about 65 atmospheres at a sintering temperature of about 2200° C. said compact being sintered within a gas permeable enclosure.

4,374,793

METHOD OF PRODUCING DENSE SINTERED SILICON CARBIDE BODY FROM POLYCARBOSILANE

Kazunori Koga; Saburo Nagano; Shinichiro Mizuta, and Masayoshi Nakayama, all of Kyoto, Japan, assignors to Kyoto Ceramic Kabushiki Kaisha, Japan

Filed Jan. 27, 1978, Ser. No. 873,150

Claims priority, application Japan, Jan. 27, 1977, 52-8445; Feb. 16, 1977, 52-16544

Int. Cl.^{3} C04B *35/58*

U.S. Cl. 264—65 **22 Claims**

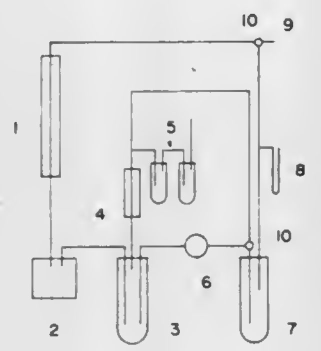

1. A method of producing a dense sintered silicon carbide body from polycarbosilane, which comprises the steps of:

(a) polymerizing an organosilicon compound to which has been added a sintering aid so as to form a polycarbosilane containing said sintering aid, said polycarbosilane being insoluble in organic solvents and having a melting or softening temperature which is higher than its thermal decomposition temperature;

(b) forming said polycarbosilane into powder;

(c) thermally decomposing said powder at 600° to 2200° in a nonoxidizing atmosphere to obtain silicon carbide containing said sintering aid;

(d) molding said silicon carbide powder; and

(e) sintering the molded body formed in step (d) in a nonoxidizing atmosphere thereby forming a dense, sintered silicon carbide body.

4,374,794

PROCESS FOR THE PREPARATION OF A LIQUID-ABSORBING AND SHOCK-ABSORBING MATERIAL

Cornelis J. M. Kok, Rhijnvis Feithstraat 44, Amsterdam, Netherlands 1054 VA

Filed Mar. 26, 1981, Ser. No. 248,011

Claims priority, application Netherlands, May 2, 1980, 80/02562

Int. Cl.^{3} B01J *2/20*

U.S. Cl. 264—122 **8 Claims**

1. A process for the preparation of liquid absorbing and shock absorbing pellets comprising the steps of:

obtaining an aqueous suspension of fibers derived from waste sludge and consisting substantially of cellulose;

adding an inorganic filler to said aqueous suspension in an amount sufficient to adjust the composition of said aqueous suspension to have 60 through 80 percent weight of fibers and 40 through 20 percent weight of filler calculated on a dry basis;

partially dewatering said aqueous suspension to form a semi-dry mass having a water content of 40 to 80 percent by weight;

extruding said semi-dry mass through a die sized to form said mass into plural pellets; and

drying said plural pellets to adjust the composition of said plural pellets to have the bulk density of 150 to 400 Kg/M^3 and a water content of 0.5 to 10 percent by weight.

4,374,795

PRODUCTION OF MOLD CHARGE OF ELASTOMERIC MATERIAL CONTAINING MAGNETIC OXIDE FILLER

John P. Keilp, Secaucus; Warren F. Moore, South Plainfield, and Victor Sirbu, Hopatcong, all of N.J., assignors to Bell Telephone Laboratories, Incorporated, Murray Hill, N.J.

Filed Sep. 11, 1980, Ser. No. 186,195

Int. Cl.^{3} B29C *17/14*

U.S. Cl. 264—152 **4 Claims**

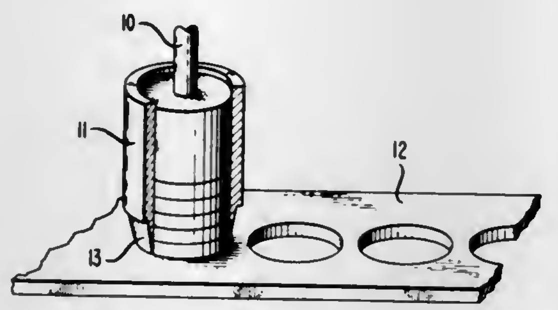

1. A method of producing a mold charge from an elastomeric molding material comprising the steps of:

(1) applying a compression force to a piece of said material to flatten said material and drive out entrapped air and gas therefrom,

(2) applying a shearing force to said material to shape said material into the desired cross-sectional outline,

(3) drawing another piece of said material under said prior piece and repeating steps (1) and (2), and

(4) building up said material by repeating steps (1) through (3) until the desired air- and gas-free mold charge thickness is obtained.

4,374,796

METHOD FOR LOADING COSMETIC MATERIAL INTO HOLLOW SPACE

Hirotake Ogasawara, Funabashi; Yoshiharu Hatakeyama, and Mitsuo Ishiguro, both of Tokyo, all of Japan, assignors to Shiseido Company, Ltd. and Yoshida Industry Co., Ltd., both of Tokyo, Japan

Filed Nov. 5, 1980, Ser. No. 204,255

Claims priority, application Japan, Feb. 18, 1980, 55-17935; Feb. 22, 1980, 55-20560; Jul. 10, 1980, 55-93276

Int. Cl.^{3} B29J *5/00*

U.S. Cl. 264—101 **11 Claims**

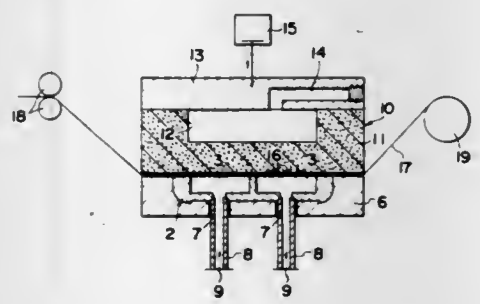

1. A method of molding a cosmetic material, said method comprising:

(a) preparing a fluent mixture of cosmetic material by mixing powder cosmetic material with a binder and a solvent;

(b) providing a mold structure having therein a mold cavity partially defined by a porous absorbing material and partially defined by a casing structure;

(c) injecting said mixture of cosmetic material under a predetermined pressure into said mold cavity and filling said mold cavity;

(d) maintaining said pressure for a time period after said mold cavity is filled with said mixture of cosmetic material;

(e) absorbing said solvent from said mixture of cosmetic material into said porous absorbing material and thereby causing a bonding of said powder cosmetic material in a solid molded shape; and

(f) separating said porous absorbing material from said molded cosmetic material and from said casing structure, thereby retaining said molded cosmetic material in said structure.

4,374,797

PROCESS FOR THE PRODUCTION OF HIGH STRENGTH YARNS BY SPIN-STRETCHING AND YARNS PRODUCED BY THE PROCESS, ESPECIALLY FROM POLYAMIDE-6 AND POLYESTER FILAMENTS

Günter Koschinek, Dietzenbach, and Dietmar Wandel, Hanau, both of Fed. Rep. of Germany, assignors to Davy McKee Aktiengesellschaft, Fed. Rep. of Germany

Filed Jul. 9, 1981, Ser. No. 281,595

Claims priority, application Fed. Rep. of Germany, Jul. 12, 1980, 3026451

Int. Cl.^{3} D01D *5/16*

U.S. Cl. 264—210.3 **12 Claims**

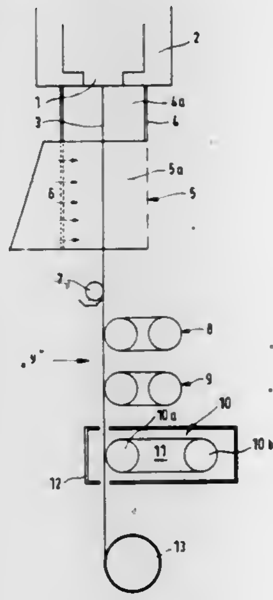

1. An improved process for the production of high-tenacity technical-grade yarns of polyamide and polyester, having a low reference elongation, by spin-drawing in which filaments extruded from a spinneret are cooled in a cooling zone by being exposed to a stream of air, said filaments being passed over a preparation device and then passed directly over a plurality of sets of rolls, said plurality of sets of rolls forming roll systems, said filaments being drawn between at least two sets of rolls in at least one draw field, said filaments being subjected to a temperature of greater than or equal to 160° C. on at least one set of rolls and subsequently being passed over a set of let-down rolls, constituting a let-down roll system, immediately prior to being wound up at a windup speed of greater than or equal to 2,200 m/min., the improvement comprising:

(a) heating a set of rolls, said set of rolls being positioned in advance of a minimum of one draw zone, said set of rolls being heated to a constant temperature, said temperature being in a range of (T_G−20° C.) to (T_G+65° C.), wherein T_G is the temperature of the glass transition point, said filaments being drawn over said set of rolls without the use of additional stationary draw means;

(b) maintaining a set of rolls at a temperature in excess of 110° C., said set of rolls being positioned following a minimum of one draw zone, said yarn having a tension of not less than 0.2 g/dtex upon leaving said roll system;

(c) permitting said yarn to remain in said let-down roll system for a residence time, said residence time being selected to be at least 0.2 sec.;

(d) maintaining said windup speed of said yarn at a speed not less than 2.5% less than the peripheral speed of said let-down roll system; and,

(e) adjusting the temperature of said let-down roll system to a temperature of less than or equal to 60° C.

4,374,798

PRODUCTION OF PLASTIC MESH STRUCTURE

Frank B. Mercer, Blackburn, England, assignor to P.L.G. Research, Blackburn, England

Continuation-in-part of Ser. No. 82,523, Oct. 9, 1979, abandoned. This application Oct. 8, 1980, Ser. No. 195,189

Claims priority, application United Kingdom, Oct. 16, 1978, 40641/78; May 25, 1979, 7918291

Int. Cl.^{3} B29C *17/02*

U.S. Cl. 264—288.8 **21 Claims**

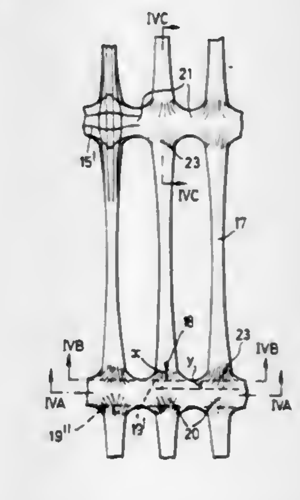

1. A method of producing a plastics material mesh structure, comprising:

providing a substantially uniplanar plastics starting material having a thickness of not less than 0.75 mm and defining a pattern of holes or depressions whose centres lie on a notional, substantially square or rectangular grid of rows or columns; and

stretching the starting material in a direction substantially parallel to the columns to stretch, into orientated strands, zones between adjacent holes or depressions of each row, the strands being interconnected by a set of substantially parallel bars generally at right angles to the strands; the stretching being effected to such an extent that a notional point which, on the starting material, lay on the notional straight line which is parallel to the rows and is tangential to respective holes or depressions, moves into the corresponding strand so that, on the mesh structure, the point is substantially spaced from the corresponding notional straight line which is parallel to the rows of mesh openings and is tangential to respective mesh openings until molecular orientation of the plastics starting material is effected in at least a portion of the zone of each bar lying between the notional straight lines drawn tangentially to adjacent rows of holes or depressions; the mid-point of the zone of the bar which interconnects the ends of aligned strands being substantially thicker than the mid-point of either of the strands interconnected by the zone.

4,374,799

METHOD FOR CASTING PARTS MADE OF FUSED CERAMIC MATERIAL

Jacques le Clerc de Bussy, Atelier de la Chaussee, Route de Gaillefontaine, 76390 Aumale, France

Filed Jun. 17, 1980, Ser. No. 160,281

Claims priority, application France, Jun. 18, 1979, 79 15485

Int. Cl.^{3} C04B *35/60;* **B29C** *5/02*

U.S. Cl. 264—332 **3 Claims**

1. A method for casting parts of fused ceramic material from a bath of oxides maintained in the liquid state in a furnace, said method comprising the steps of:

(a) providing a mold of refractory material which is permeable to gas and impermeable to the liquid ceramic material, said mold having a cavity with an orifice at its lower end,
(b) connecting the lower end of the mold cavity to a downwardly directed feed duct having a small diameter port,
(c) dipping the lower end of said duct in the liquid bath,
(d) establishing a vacuum in the mold cavity by causing the gases in said cavity and said duct to pass through the said gas-permeable material of the mold, said vacuum causing the bath liquid to rise in the duct and in the mold cavity,

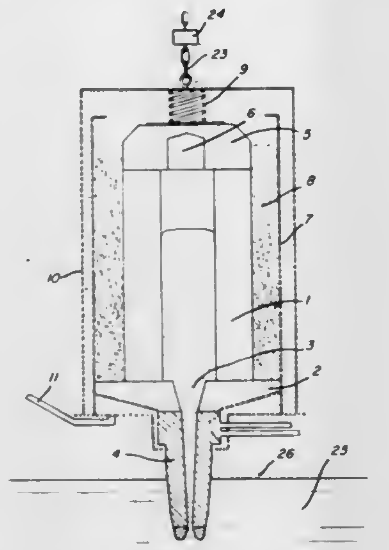

said vacuum being applied to the mold in an abrupt manner so that the liquid is sprayed and propelled from said small diameter port against the mold walls,
(e) allowing the bath liquid to solidify in the duct before the mold cavity is completely filled,
(f) lifting the mold, together with the duct, away from the liquid bath and transporting the same away from the furnace, and
(g) allowing complete solidification of the bath liquid in the mold, whereby to form a hollow casting in said mold cavity.

4,374,800

METHOD FOR MAKING AN ARTICLE OF PARTIALLY CRYSTALLINE ORGANIC RESIN

Robert J. Gartland, Youngstown, Ohio, assignor to The Goodyear Tire & Rubber Company, Akron, Ohio

Filed Mar. 18, 1981, Ser. No. 244,836

Int. Cl.³ B29C *17/04*

U.S. Cl. 264—522 **6 Claims**

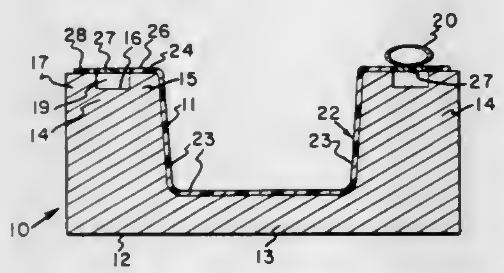

1. A process for thermoforming a themally crystallizable polyalkylene terephthalate resin sheet which is substantially unoriented and has an initial thermally induced crystallinity of less than 10 percent into a container having a perimetric flange surrounding a body portion, comprising:
(a) rapidly preheating the sheet to a suitable thermoforming temperature so as not to increase the average thermally induced crystallinity to more than 10 percent and very shortly thereafter,
(b) contacting and conforming the sheet while preheated with a heated mold having a body-forming portion which is at temperature in the range of about 140 to 190 degrees C., and a flange-forming portion surrounding the body-forming portion,
(c) simultaneously with step (b) rapidly reducing the temperature of a part of that portion of said sheet which overlies the flange-forming portion of said mold to reduce the rate of thermally induced crystallization thereof,
(d) maintaining contact of the conformed sheet with the heated mold until an average crystallinity of at least about 20 percent is achieved in that portion of the sheet which contacts the body-forming portion of the mold while maintaining said part of that portion of the sheet which overlies the flange-forming portion of the mold at a lower temperature; and
(e) removing the thermoformed sheet from the mold.

4,374,801

METHOD OF HANDLING FUEL ASSEMBLIES AND RODS WHEN RELOADING A NUCLEAR REACTOR

Michel Albin, Vaucresson, France, assignor to Framatome, Courbevoie, France

Filed Jun. 25, 1980, Ser. No. 163,207

Claims priority, application France, Jun. 26, 1979, 79 16349

Int. Cl.³ G21C *19/00*

U.S. Cl. 376—264 **8 Claims**

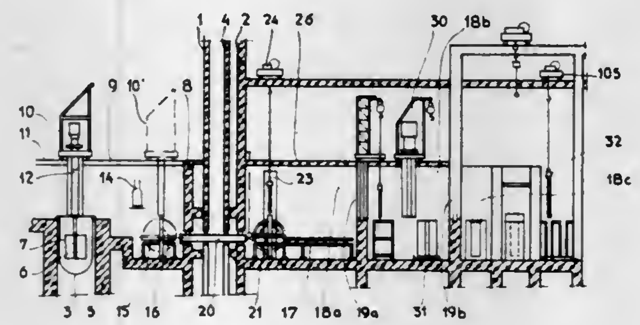

1. Method of handling fuel assemblies and rods in the reloading with fuel of a nuclear reactor containing assemblies closed by two caps and having a framework inside which fuel rods are disposed vertically, the reloading being effected with the vessel of said reactor in open position and the swimming pool surrounding said vessel filled with water, and comprising transfers of fuel assemblies from one position to another inside the core of said reactor, replacement of unsuitable assemblies by suitable assemblies, and various tests, each replaced assembly being taken from the vessel of said reactor, placed in a transfer container and conveyed, in horizontal position, into the swimming pool for the fuel adjoining the reactor, said method comprising the steps of
(a) placing said assembly in a vertical position inverted relative its operative position in the core of the reactor, i.e., with its lower cap uppermost;
(b) de-mounting said lower cap so that access can be had to the ends of said fuel rods;
(c) identifying fuel rods requiring replacement in said assembly if such identification has not been carried out previously;
(d) simultaneously taking up a set of rods to be replaced;
(e) continuing the taking up of rods in sets until all the rods to be replaced have been taken up;
(f) depositing said sets of rods in a storage area;
(g) taking up replacement rods corresponding precisely to the sets of rods to be replaced;
(h) depositing said replacement rods in sets in the framework of said fuel assembly;
(i) replacing the lower cap of said assembly; and
(j) conveying said assembly into said reactor vessel at its new location.

4,374,802

OXYGENATOR

Hiromichi Fukasawa, Narashino, Japan, assignor to Terumo Corporation, Tokyo, Japan

Filed Sep. 16, 1981, Ser. No. 302,550

Claims priority, application Japan, Sep. 25, 1980, 55-133172

Int. Cl.³ A61M *1/03*

U.S. Cl. 422—48 **7 Claims**

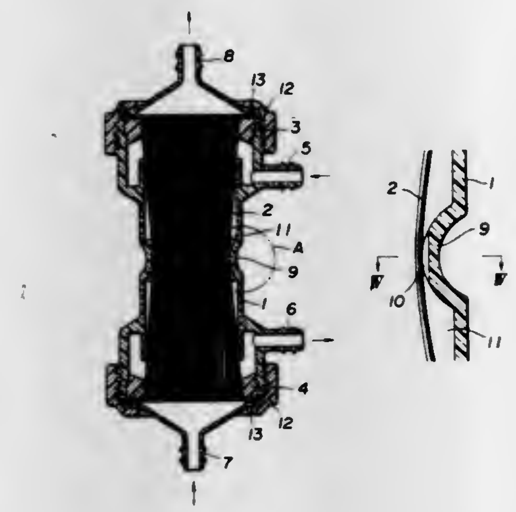

1. An oxygenator for blood, comprising:
an elongated hollow housing:
a bundle of hollow fibers made of a plurality of hollow fibers for gas exchange disposed inside said housing along the longitudinal direction thereof, the ends of said hollow fibers having openings;
two partition walls respectively supporting the two end portions of the hollow fibers in a liquid tight manner without blocking the openings at the ends of said hollow fibers and defining a gaseous chamber along with the inner wall of the said housing and the outer surfaces of the said hollow fibers;
inlet and outlet ports for passing gaseous material, said inlet and outlet ports being in communication with the interior of said chamber and extending through a wall of said housing;
inlet and outlet ports for passing blood, each communicating with the interior spaces of each of said hollow fibers on the outside of the said partition walls;
an inward projection formed in an intermediate portion of said housing in the longitudinal direction thereof for engaging and fastening said bundle of hollow fibers to said housing and defining chamber portions inside said housing on opposing sides of said inward projection;
at least one liquid passing groove formed at said inward projection for passing liquid collected at a narrow portion of the said housing defined by said inward projection from one of said chamber portions to the other end of said chamber portions in said housing, said collected liquid flowing down along the inner wall of said one chamber portion of said housing, through said at least one groove, and to said other chamber portion;
each groove having a cross sectional area of from about 0.005 to 2.9 mm^2;
said grooves having a total cross sectional area S and said hollow fibers of said bundle of hollow fibers having a total membrane area M such that S/M is not less than 2.7×10^{-7}.

4,374,803

CATALYTIC WASTE GAS CONVERTER FOR COMBUSTION MACHINES

Gerhard Fratzer, and Bernhard Beck, both of Rheinfelden, Fed. Rep. of Germany, assignors to Degussa Aktiengesellschaft, Frankfurt am Main, Fed. Rep. of Germany

Filed Nov. 3, 1980, Ser. No. 203,673

Claims priority, application Fed. Rep. of Germany, Nov. 7, 1979, 2944841

Int. Cl.³ B01D *53/36*; **F01N** *3/28*

U.S. Cl. 422—176 **15 Claims**

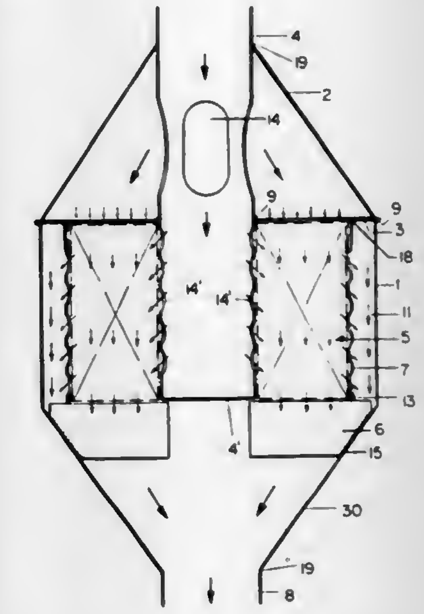

1. A catalytic waste gas converter suitable for use with an internal combustion engine comprising in combination: a cylindrical housing with gas inlet means at one end thereof and gas withdrawal means at the other end thereof, a first conical cover at the gas inlet end of the housing and a second conical cover at the gas withdrawal end of the housing, a holding plate in said housing, said holding plate comprising inner and outer rings connected by spokes, means for fastening said holding plate at the periphery of the outer ring at the transition between the cylindrical housing and the cover at the gas inlet end thereof, a gas supply tube passing through the cover on the gas inlet end of the housing and through the inner ring of the holding plate and extending up to the plane of the cover at the gas withdrawal end of the housing, said gas supply tube being closed at the end thereof, the section of the gas supply tube before the holding plate and within the cover on the gas inlet end of the housing having openings on the circumference and the section of the gas supply tube lying below the holding plate having perforations, a coil surrounding the perforated section of the gas supply tube and reaching in its cross section at least to the inner edge of the outer ring of the holding plate or closely thereunder, said coil being made of catalyst coated, alternating smooth and undulating layers of a high temperature and scale resistant steel screen, said coil being supported on its downstream face by flange means fastened to the cover on the gas withdrawal side of the housing; said coil having a perforated cylinder disposed on its periphery, and a gas withdrawal tube attached to the cover on the gas withdrawal end of the housing.

4,374,804

CONTROLLED SLUDGE COMPOSTING SYSTEM

James M. Easter, II, P.O. Box 23, Owings Mills, Md. 21117

Filed Aug. 7, 1980, Ser. No. 176,197

Int. Cl.³ B01J *1/00*

U.S. Cl. 422—184 **10 Claims**

1. A controlled sludge composting system, comprising:
a sludge storage means, said sludge storage means containing and providing a quantity of sludge;
a composting agent storage means, said composting agent

storage means containing and providing a quantity of composting agent;

a mixing means, said sludge storage means and said composting agent storage means being connected by a first and second conveying means, respectively, to said mixing means and communicating internally therewith and therebetween, a predetermined ratio of amounts of said sludge and said composting agent being received through said first and second conveying means, respectively, into said mixing means and being thoroughly mixed therein;

a first silo means, said mixing means being connected by a third conveying means to said first silo means and communicating internally therewith and therebetween, said predetermined ratio of amounts of said sludge and said composting agent being transferred to and discharged into the top end of said first silo means from said mixing means by said third conveying means after being thoroughly mixed in said mixing means;

a first material distribution means, said first material distribution means being located and installed within said first silo means at the uppermost end thereof, said first material distribution means having a first traveling carrier component, said first traveling carrier component being mounted and movably affixed within said first silo means so as to move longitudinally therewithin and having a first traveling carriage element mounted and movably affixed upon said first traveling carrier component so as to move transversely within said first silo and having a fourth conveyor means mounted and

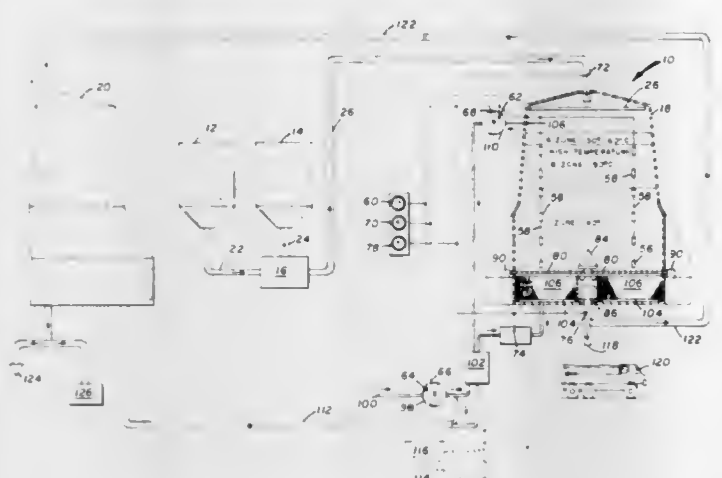

affixed upon said first traveling carriage element, said discharge of said mixture of said sludge and said composting agent into said first silo being directed to said fourth conveyor means, said fourth conveyor means distributing said mixture of said sludge and said composting material in even layers over entire area of said first silo by a concurrent matrix-like movement of said longitudinal movements of said first traveling carrier component, said transverse movements of said first traveling carriage element, and movements of said fourth conveyor means, said matrix-like deposition of said mixture being an evenly layered distribution without separation of the materials to fill said first silo with said mixture of said sludge and said composting agent;

a first material removal means, said first material removal means being located and installed within said first silo means, said first material removal means having a first horizontal screw conveyor component, said first horizontal screw conveyor component being located at the bottom end of said first silo means and being situated transversely thereto, said first horizontal screw conveyor component having a rack and pinion type element at each end of said first horizontal screw conveyor component, said rack and pinion element providing a longitudinal movement of said first horizontal screw conveyor component in relation to the transverse direction of said first silo, said first horizontal screw conveyor component being capable of cutting off successive bottom layers of the mixture of sludge and composting agent materials which has been processed through said first silo from said top end to said bottom end, said first horizontal screw conveyor component thereby transporting said cut off layers to one end thereof for discharge therefrom, said first material removal means having a fifth conveyor means, said fifth conveyor means being located at the discharge end of said first horizontal screw conveyor component, said fifth conveyor means transporting said discharged portion of processed mixture of sludge and composting agent materials to a subsequent dual discharge point for bulk disposal and for further processing;

a second silo means, said second silo means being connected to said first silo means by a sixth conveyor means, said sixth conveyor means receiving said processed mixture of sludge and composting agent from said further processing point of said dual discharge point and transporting said processed mixture to the top end of said second silo means for discharge therein;

a second material distribution means, said second material distribution means being located and installed within said second silo means at the uppermost end thereof, said second material distribution means having a second traveling carrier component, said second traveling carrier component being mounted and movably affixed within said second silo means so as to move longitudinally therewithin and having a second traveling carriage element mounted and movably affixed upon said second traveling carrier component so as to move transversely within said second silo and having a seventh conveyor means mounted and affixed upon said second traveling carriage element, said discharge of said processed mixture at said top end of said second silo being directed to said seventh conveyor means, said seventh conveyor means distributing said processed mixture in even layers over entire area of said second silo by a concurrent matrix-like movement of said longitudinal movements of said second traveling carrier component, said transverse movements of said traveling carriage element, and movements of said seventh conveyor means, said matrix-like deposition of said processed mixture being an evenly layered distribution without separation of the materials to fill said second silo with said processed mixture;

a second material removal means, said second material removal means being located and installed within said second silo means, said second material removal means having a second horizontal conveyor screw component, said second horizontal screw conveyor component being located at the bottom end of said second silo means and being situated transversely thereto, said second horizontal screw conveyor component having a rack and pinion type element at each end of said second horizontal screw conveyor component, said rack and pinion element providing a longitudinal movement of said second horizontal screw conveyor component in relation to the transverse direction of said second silo, said second horizontal screw conveyor component being capable of cutting off successive bottom layers of the processed mixture which has been processed through said second silo from said top end to said bottom end, said second horizontal screw conveyor component thereby transporting said cut off layers to one end thereof for discharge therefrom, said second material removal means having an eighth conveyor means, said eighth conveyor means being located at the discharge end of said second horizontal screw conveyor component, said eighth conveyor means transporting said discharged portion of said processed mixture to a subsequent dual discharge point for bulk distribution and for bagging for distribution.

4,374,805

REDUCTANTS FOR REDUCING METALS IN ACID MEDIA

Ralph E. Worthington, Winter Haven, Fla.; Michael A. Smith, Valdosta, Ga., and John M. Tobias, Lakeland, Fla., assignors to Uranium Recovery Corporation, Mulberry, Fla.

Continuation of Ser. No. 909,843, May 26, 1978, abandoned. This application May 7, 1980, Ser. No. 147,363

Int. Cl.³ C01G *43/00*

U.S. Cl. 423—10 **18 Claims**

9. A process for the recovery of uranium from wet-process phosphoric acid derived from the sulfuric acid acidulation of uncalcined phosphate rock comprising contacting wet-process phosphoric acid containing ferric iron and uranium values with a reductant selected from the group consisting of silicon metal and iron-silicon alloy containing about 5 to 80% silicon by weight to reduce ferric iron to ferrous iron and any hexavalent uranium to tetravalent uranium and contacting the reduced wet-process phosphoric acid with an organic extractant selective for uranium in the tetravalent state.

12. A process for reducing a metal to a lower oxidation state in an acid comprising contacting an acid selected from the group consisting of phosphoric acid, sulfuric acid and hydrochloric acid containing the metal selected from the group consisting of iron, uranium, vanadium, molybdenum and a rare earth with a reductant selected from the group consisting of silicon metal and iron-silicon all containing about 5 to 80% silicon by weight in the presence of fluoride ion to reduce at least a portion of said metal in said acid to a lower oxidation state.

4,374,806

RAFFINATE WASH OF SECOND CYCLE SOLVENT IN THE RECOVERY OF URANIUM FROM PHOSPHATE ROCK

Hani A. Abodishish, and Robert W. Ritchey, both of Lakeland, Fla., assignors to Wyoming Mineral Corporation, Lakewood, Colo.

Filed Jun. 17, 1980, Ser. No. 160,245

Int. Cl.³ C01G *56/00;* **B01D** *11/00*

U.S. Cl. 423—10 **6 Claims**

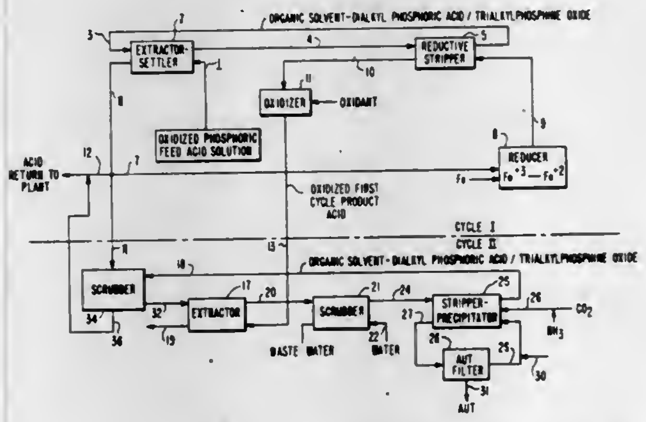

1. In the process of recovering uranium from an aqueous solution of wet process phosphoric acid feed, comprising a first and a second cycle, where phosphoric acid is passed through extractor means and stripper means in both cycles and where a phosphoric acid raffinate containing about 3 grams to about 15 grams per liter of iron exits the extractor means in the first cycle; the improvement comprising treating a second cycle ammonia laden organic solvent stream to remove ammonia therefrom, after said solvent has passed through a second cycle stripper means and contacted ammonium compounds, said treating consisting of scrubbing said second cycle ammonia laden organic solvent stream in the second cycle, with first cycle phosphoric acid raffinate containing about 3 grams to about 15 grams per liter of iron, from the first cycle extractor means, in an amount effective to remove ammonia, to provide an ammonia barren organic solvent stream which is then fed into the second cycle extractor means without forming any substantial amounts of iron-ammonium-phosphate precipitate, where the volume ratio of the second cycle ammonia laden organic solvent stream:first cycle iron containing phosphoric acid raffinate stream from the first cycle extractor means is from 1:0.2 to 0.5.

4,374,807

METHOD FOR RECOVERING ALUMINUM FLUORIDE FROM FLUORINE-CONTAINING AQUEOUS ALUMINUM NITRATE SOLUTIONS

Hiroshi Ishimi, Yokohama; Hisaaki Shimauchi, and Chuzaburo Tanaka, both of Tohkaimura, all of Japan, assignors to Sumitomo Metal Mining Company Ltd., Tokyo, Japan

Filed Jul. 17, 1980, Ser. No. 169,830

Claims priority, application Japan, Jul. 30, 1979, 54/96987

Int. Cl.³ C01G *43/025*

U.S. Cl. 423—11 **20 Claims**

7. In a process for converting UF_6 into UO_2 wherein UF_6 is brought into contact with an aqueous aluminum nitrate solution to thereby produce an intermediate solution containing aluminum fluoride, uranyl nitrate and residual aluminum nitrate, and wherein the uranyl nitrate is removed from said intermediate solution to present a resultant solution containing aluminum fluoride and aluminum nitrate, the improvement of which comprises:

adding a sufficient quantity of hydrofluoric acid to the resultant solution to substantially minimize the solubility of aluminum fluoride therein and thereby produce a substantially uranium-free aluminum fluoride precipitate and an uranium-containing aqueous solution; and thereafter

separately recovering the substantially uranium-free aluminum fluoride precipitate thus produced.

4,374,808

REMOVAL OF SELENIUM FROM ACIDIC COPPER/NICKEL SOLUTIONS

Donald R. Weir; Derek G. E. Kerfoot, both of Fort Saskatchewan, Canada, and Zdenek Hofirek, Rustenburg, South Africa, assignors to Sherritt Gordon Mines Limited, Toronto, Canada

Filed Jun. 24, 1982, Ser. No. 391,807

Claims priority, application Canada, Oct. 30, 1981, 389144

Int. Cl.³ C01G *3/10;* **C01B** *19/04*

U.S. Cl. 423—42 **11 Claims**

3. A process for the removal of selenium (IV) and selenium (VI) from an aqueous acidic copper and nickel sulphate solution comprising the steps of adjusting and maintaining the acidity of the solution to a pH below 1 corresponding to at least 10 g/L sulphuric acid and, as a first stage, passing the solution at a temperature in the range of about 140° to 175° C. through a reactor and injecting into the solution in the reactor a selenium-reducing compound selected from the group consisting of sulphur dioxide and a sulphite-containing solution for the substantial precipitation of selenium (IV), and as a second stage, maintaining the resulting solution or slurry at a temperature in the range of about 140° to about 200° C. in an essentially oxygen-free atmosphere at a pressure within the range of about 400 to about 1750 kPa to obtain a final solution containing less than 5 mg/L total selenium and a precipitate consisting of cuprous selenide (Cu_2Se), and metallic copper.

4,374,809

PROCESS FOR THE SEPARATION OF MOLYBDENUM VALUES FROM TUNGSTEN VALUES

Mark S. Chagnon, Lowell, Mass.; Joseph E. Lester, Gibsonia, Pa., and Samuel Natansohn, Sharon, Mass., assignors to GTE Laboratories Incorporated, Waltham, Mass.

Filed Oct. 16, 1981, Ser. No. 311,838

Int. Cl.³ C01G *39/00, 41/00*

U.S. Cl. 423—54 **18 Claims**

1. A process for removing molybdenum values from an aqueous solution containing tungsten values and molybdenum

values, said aqueous solution being at a pH greater than 8.5, said process comprising:
contacting said aqueous solution with an extractant comprising
a mercaptoaromatic complexing agent having two mercapto groups at ortho positions to each other, and
an organic solvent;
the contacting of the aqueous solution with the extractant taking place for a sufficient amount of time to extract a portion of said molybdenum values without extracting an appreciable portion of said tungsten values.

4,374,810

RECOVERY OF FLUORINE FROM POND WATER OF WET PROCESS PHOSPHORIC ACID PLANTS AND RECYCLING OF DEFLUORINATED WATER

Padraic S. O'Neill, Baton Rouge, La., assignor to Agrico Chemical Company, Tulsa, Okla.

Continuation of Ser. No. 911,668, Jun. 1, 1978, abandoned. This application Jun. 4, 1979, Ser. No. 45,116

Int. Cl.³ C01F ***11/22;*** **C02F** ***1/52***

U.S. Cl. 423—160 **11 Claims**

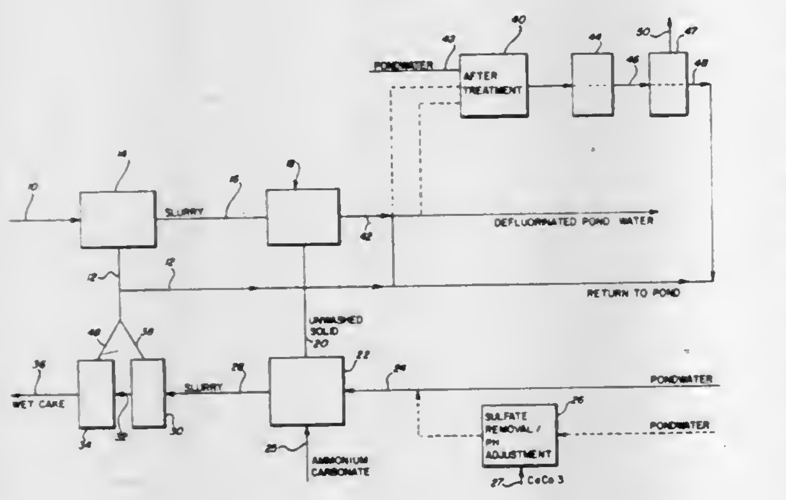

1. A process for recovering a metallurgical grade fluorspar containing from about 60 to about 80% calcium fluoride from the waste water pond of phosphoric acid plants and returning the defluorinated water to the pond, said waste water having a pH of about 0.8 and containing from about 0.5 to about 1.5% fluoride, from about 0.5 to about 1.5% phosphates and less than about 0.4% sulfates, comprising the steps of:
(1) adding sufficient calcium carbonate to the waste water to obtain an adjusted waste water solution having a pH in the range 2–3, whereby calcium fluoride is precipitated without substantial precipitation of phosphates and sulfates;
(2) washing the precipitate formed in step (1) with the waste water and with an ammonium carbonate solution to reduce the phosphate and sulfate content of said precipitate;
(3) filtering the washed precipitate obtained in step (2) to recover a metallurgical grade fluorspar and to obtain a phosphate and sulfate containing filtrate;
(4) mixing the phosphate and sulfate containing filtrate of step (3) with sufficient waste water to reduce the pH thereof to a value in the range of 1.5–2.0;
(5) sedimentating the mixture obtained in step (4) for 5–21 days to separate silica therefrom to obtain a clear solution; and
(6) returning the clear solution obtained in step (5) to the pond.

4,374,811

METHOD FOR COOLING AND SEPARATING CHLORIDES AND FLUORIDES FROM AMMONIACAL GAS

Robert Karger, Dortmund, and Horst Dungs, Herne, both of Fed. Rep. of Germany, assignors to Firma Carl Still GmbH and Co. KG, Fed. Rep. of Germany

Filed Sep. 26, 1980, Ser. No. 191,014

Claims priority, application Fed. Rep. of Germany, Oct. 5, 1979, 2940412

Int. Cl.³ B01D ***53/34***

U.S. Cl. 423—240 **22 Claims**

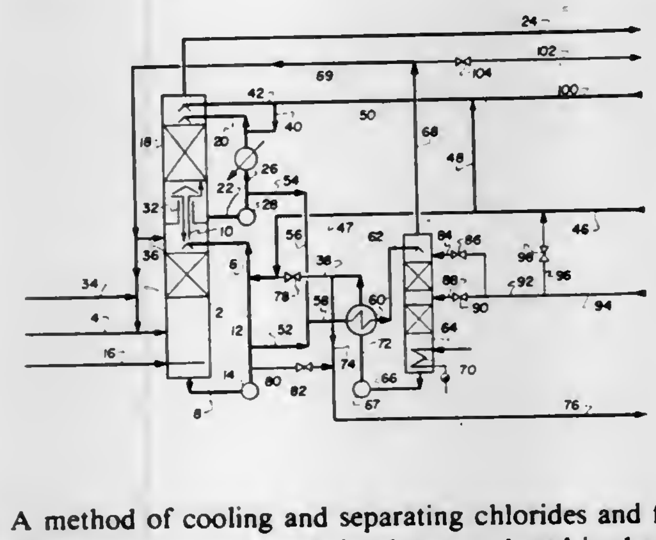

1. A method of cooling and separating chlorides and fluorides from an untreated ammoniacal gas produced in the carbonization or gasification of coal comprising the steps of cooling the gas, said cooling step including directly adding a concentrated aqueous salt solution having a high concentration of at least one of chlorine and fluorine ions close to saturation for the temperature of the solution to the ammoniacal gas in a cooler (a) to form a first salt solution enriched with chlorides, fluorides and ammonia compounds and a treated gas, and (b) removing at least part of the enriched solution from the cooler.

4,374,812

PROCESS FOR STACK GAS TREATMENT

Masumi Atsukawa; Naoharu Shinoda; Atsushi Tatani, all of Hiroshima, and Taku Shimizu, Kawasaki, all of Japan, assignors to Mitsubishi Jukogyo Kabushiki Kaisha, Tokyo, Japan

Continuation of Ser. No. 56,613, Jun. 11, 1979, abandoned. This application Nov. 28, 1980, Ser. No. 211,083

Claims priority, application Japan, Jul. 11, 1978, 53-84239

Int. Cl.³ C01B ***17/00***

U.S. Cl. 423—242 **1 Claim**

1. A wet process for stack gas treatment wherein the stack gas is scrubbed in a scrubber with a scrubbing suspension containing calcium hydroxide, calcium carbonate, or mixtures thereof to remove sulfur oxides from the gas, characterized in that at least a part of the scrubbing suspension is taken out from the scrubber into the oxidizer, where it is oxidized with a supply of air or oxygen containing gas and, after the oxidation, all of the scrubbing suspension from said oxidizer is recycled to said scrubber whereby at least 18% of the sulfur oxides absorbed from the gas by said scrubbing suspension is oxidized to gypsum, the concentration of calcium sulfate in said scrubbing suspension being from 2 to 15% by weight of the total weight of the liquid in said scrubbing suspension.

4,374,813

REVERSE-JET SCRUBBER APPARATUS AND METHOD

Gilbert K. Chen, and Timothy L. Holmes, both of Wichita, Kans., assignors to Koch Engineering Company, Inc., Wichita, Kans.

Continuation-in-part of Ser. No. 149,148, May 14, 1980, abandoned. This application Apr. 20, 1981, Ser. No. 251,277

Int. Cl.³ C01B ***7/00***

U.S. Cl. 423—242 **28 Claims**

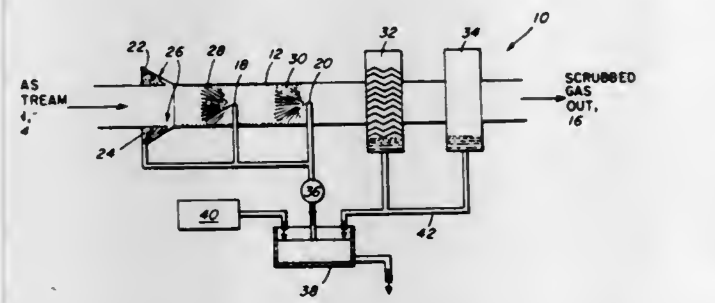

13. A method for scrubbing particulate material and gaseous contaminants from a high-velocity gas stream having a gas-drag parameter of 4.0 or greater, which method comprises:
(a) passing the gas stream through an elongated conduit having an inlet for introducing the gas stream to be scrubbed, and an outlet for the discharge of a scrubbed gas stream, the elongated conduit characterized by an interior wall surface;
(b) forming a plurality of plug-like, separate scrubbing zones within the conduit by spraying an alkaline scrubbing liquid countercurrent to the flow of the gas stream under sufficient force and pressure, to overcome initially the force of the gas stream, the scrubbing zones covering substantially the cross-sectional area of the conduit, and each scrubbing zone not overlapping substantially with any other scrubbing zone, to provide a pressure drop of the gas stream of about 2.8 inches of water or less in each scrubbing zone;
(c) passing the gas stream to be scrubbed through the scrubbing zones to obtain a scrubbed gas stream;
(d) separating liquid material from the scrubbed gas stream; and
(e) discharging a scrubbed gas stream.

4,374,814

METHOD FOR REMOVAL OF GASEOUS FORMALDEHYDE FROM THE ATMOSPHERE

Norman G. Gaylord, New Providence, N.J., assignor to Pure Air, Inc., Metairie, La.

Filed Apr. 28, 1981, Ser. No. 258,499

Int. Cl.³ B01D ***53/34***

U.S. Cl. 423—245 **26 Claims**

1. A method for purifying air by removal of gaseous formaldehyde which consists in permitting the air to come in contact with a solid shaped composition consisting essentially of one or more polyhydric water-soluble polymers and ambient moisture.

4,374,815

PHOSPHONITRILIC CHLORIDE POLYMERS

Hsueh M. Li, Baton Rouge, La., assignor to Ethyl Corporation, Richmond, Va.

Filed Oct. 26, 1981, Ser. No. 314,522

Int. Cl.³ C01B ***25/10***

U.S. Cl. 423—300 **27 Claims**

1. A process for producing linear phosphonitrilic chloride polymers from linear phosphonitrilic chloride oligomers of lower molecular weight which comprises:
(a) heating a mixture of linear phosphonitrilic chloride oligomer having an average degree of polymerization of at least 4 and an excess of ammonia or ammonium chloride at a temperature in the range of about 130° to about 250° C. while concurrently removing hydrogen chloride and concurrently or subsequently removing cyclic phosphonitrilic chloride oligomer from the heated reaction mixture; and
(b) after the formation of cyclic phosphonitrilic chloride oligomer has essentially ceased and after removal of the oligomer, heating the reaction mixture in an inert liquid solvent at a temperature in the range of about 130° to about 250° C. to increase the molecular weight of the dissolved linear phosphonitrilic chloride polymer.

4,374,816

PROCESS FOR PRODUCING HYPO-PHOSPHOROUS ACID (H_3PO_2) AND NON-TRANSITION METAL HYPOPHOSPHITES

Gregory G. Arzoumanidis, Stamford, Conn., and Kirk V. Darragh, Yorktown, N.Y., assignors to Stauffer Chemical Company, Westport, Conn.

Continuation of Ser. No. 35,576, May 3, 1979, Pat. No. 4,265,866. This application Nov. 17, 1980, Ser. No. 207,306

The portion of the term of this patent subsequent to May 5, 1998, has been disclaimed.

Int. Cl.³ C01B ***25/12, 25/16, 15/16***

U.S. Cl. 423—304 **28 Claims**

1. A process comprising reacting, in the absence of a catalyst and under an acidic condition wherein said acidic condition is a pH of less than about 6, phosphine with an aqueous solution of hydrogen peroxide to produce an acid solution containing hypophosphorous acid (H_3PO_2) as the predominant phosphorus containing acid.

4,374,817

FORMULATION OF PHOSPHATE ROCK SLURRIES

Richard L. Lehman, Belle Mead, and John A. Shepherd, Jamesburg, both of N.J., assignors to FMC Corporation, Philadelphia, Pa.

Filed Aug. 21, 1981, Ser. No. 294,964

Int. Cl.³ C01B ***25/16;*** **C01F** ***11/44***

U.S. Cl. 423—319 **12 Claims**

8. In the process of producing an aqueous slurry of ground phosphate rock which slurry has a solids content between about 60% and about 80% by weight and a reduced Brookfield viscosity below about 2500, which process comprises grinding phosphate rock and dispersing the ground particles of said rock in an aqueous medium, the improvement which comprises providing said reduced viscosity by incorporating in said slurry at some point in its preparation both sodium tripolyphosphate and an alkaline material selected from the group consisting of sodium hydroxide, potassium hydroxide and mixtures thereof.

4,374,818

PROCESS FOR THE PREPARATION OF ALKALI METAL SALTS OF IMIDODISULFONIC ACID

Hans-Peter Rieck, Kelkheim, Fed. Rep. of Germany, assignor to Hoechst Aktiengesellschaft, Frankfurt am Main, Fed. Rep. of Germany

Filed Oct. 14, 1981, Ser. No. 311,273

Claims priority, application Fed. Rep. of Germany, Oct. 16, 1980, 3039021

Int. Cl.³ C01B ***21/093***

U.S. Cl. 423—388 **13 Claims**

1. A process for obtaining an alkali metal salt of imidodisulfonic acid which comprises hydrolyzing ammonium nitrilotrisulfonate in the presence of an alkali metal hydroxide.

7. A process for obtaining an alkali metal salt of imidodisulfonic acid which comprises adding ammonium nitrilotrisulfon-

ate to an aqueous solution having a pH of from 0 to 7, effecting a desired degree of hydrolysis and then adding to the resulting

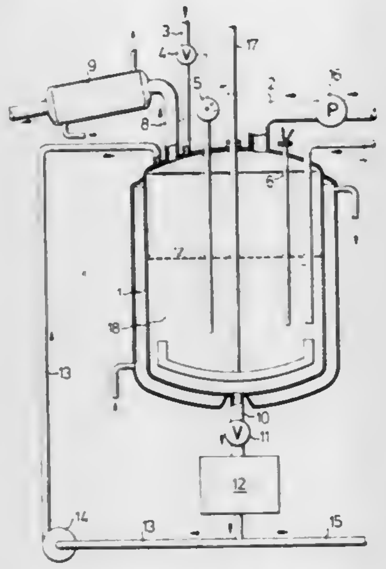

reaction mixture an amount of alkali-metal hydroxide sufficient to increase the pH value to from 7 to 11.

4,374,819

CATALYTIC PROCESS FOR REMOVING TOXIC GASES FROM GAS STREAMS

Frank C. Palilla, Framingham; Gary G. Gaudet, Dorchester, and Joseph A. Baglio, Andover, all of Mass., assignors to GTE Laboratories Incorporated, Waltham, Mass.

Division of Ser. No. 93,662, Nov. 13, 1979, abandoned, which is a continuation-in-part of Ser. No. 715, Jan. 3, 1979, abandoned, which is a continuation of Ser. No. 864,692, Dec. 27, 1977, abandoned. This application Dec. 22, 1980, Ser. No. 218,845

Int. Cl.³ C01B *17/04*

U.S. Cl. 423—570 **24 Claims**

1. A multi-stage process for reducing the content of hydrogen sulfide, sulfur dioxide, carbonyl sulfide and disulfide in a gas stream which comprises

(a) passing said gas stream through a first reaction stage at a temperature between about 150° and about 350° C., said stage containing a pretreated catalyst of the formula

$xLn_2O_3.yT_2O_3$

in which Ln is yttrium or a rare earth element and T is selected from the group consisting of cobalt, iron and nickel and each of x and y independently is a number from 0 to 3, said catalyst being substantially non-crystalline and having a surface area of from about 10 m^2/g to about 40 m^2/g and having been prepared at a temperature no higher than 700° C, to obtain elemental sulfur and a first product stream having reduced content of sulfur containing gases,

(b) passing the first product stream through one or more intermediate catalytic reaction stages in which the Claus reaction occurs, to obtain further elemental sulfur and a second product stream having further reduced content of sulfur containing gases, and

(c) passing the second product stream through a final reaction stage at a temperature between about 150° and 300° C., said final stage containing a catalyst usable in the first reaction stage, in the presence of air to obtain elemental sulfur and still further reduced content of the sulfur containing gases, which gases can be recyled to an earlier stage.

4,374,820

MANUFACTURE OF H_2O_2

Thomas E. Guenter, Memphis, Tenn., assignor to E. I. Du Pont de Nemours and Company, Wilmington, Del.

Filed Jul. 29, 1981, Ser. No. 288,005

Int. Cl.³ C01B *15/02*

U.S. Cl. 423—588 **7 Claims**

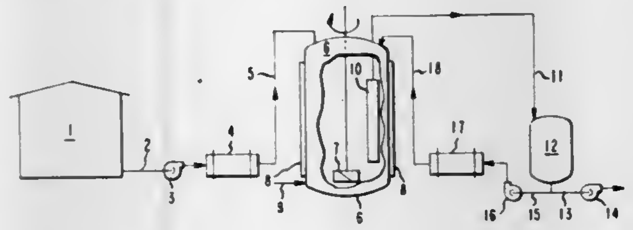

1. A process of hydrogenating an alkylanthraquinone working solution comprising feeding an alkylanthraquinone working solution in the oxygenated form at a temperature of from 20° to 40° C. to a hydrogenator containing a slurry of supported hydrogenation catalyst which is supported palladium, supported platinum or supported nickel having a median particle size of from 70 to 200 microns and less than 10% by weight particles less than 50 microns in diameter, the working solution in the hydrogenerator being maintained at from 38° to 60° C., and containing from 2 to 15% catalyst maintaining the pressure in the hydrogenator at from about 10 to about 100 psig, removing hydrogenated working solution from the hydrogenator through immersed filters which retain essentially all the catalyst in the hydrogenerator, dividing the hydrogenated working solution into a recycle stream which comprises from 10 to 90 percent of the hydrogenated working solution and a remaining stream which is to be oxidized, cooling the recycle stream to from 20° to 40° C. and recycling the cooled stream to the hydrogenator.

4,374,821

MYOCARDIAL IMAGING AGENT AND METHOD

Kenneth A. Glavan, and James F. Kronauge, both of Plainsboro, N.J., assignors to E. R. Squibb & Sons, Inc., Princeton, N.J.

Filed Jun. 28, 1982, Ser. No. 392,811

Int. Cl.³ A61K *49/04;* **C07F** *9/28, 13/00*

U.S. Cl. 424—4 **16 Claims**

1. A technetium complex having the structure

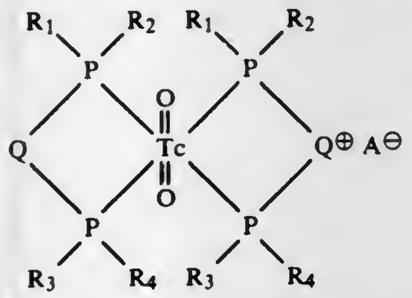

wherein Q is a $—(CH_2)_n—$linking group wherein n is 2 to 8, or a 1,2-phenylene linking group,

R_1, R_2, R_3 and R_4 are independently the same or different and are hydrogen, lower alkyl or phenyl, and

A represents an anion group.

15. A method for scanning the heart which comprises injecting intravenously the complex as defined in claim 1 in a pharmaceutically acceptable vehicle and scanning the heart.

4,374,822

ORAL COMPOSITION

Ralph Fine, East Brunswick, N.J., and Sidney Weiss, Levittown, Pa., assignors to Colgate-Palmolive, New York, N.Y.

Continuation-in-part of Ser. No. 312,211, Oct. 19, 1981, abandoned. This application Dec. 7, 1981, Ser. No. 327,668

Int. Cl.³ A61K *7/16, 7/26*

U.S. Cl. 424—49 **12 Claims**

1. A flavored oral hygiene composition comprising a dental mouthwash, dental cream or dental gel vehicle consisting essentially of a humectant, a flavoring oil in amount to provide flavor characteristic to said composition up to about 5% by weight of said composition and about 0.002–0.007% by weight of a 5'-ribonucleotide.

4,374,823

DENTAL COMPOSITION

Kenneth Harvey, Wilmslow, and Harry Hayes, Warrington, both of England, assignors to Colgate-Palmolive Company, New York, N.Y.

Filed Aug. 17, 1981, Ser. No. 293,424

Claims priority, application United Kingdom, Aug. 19, 1980, 8026943

Int. Cl.³ A61K *7/16, 7/18*

U.S. Cl. 424—52 **5 Claims**

1. A dental composition comprising 20 to 75% by weight of an aqueous liquid carrier consisting essentially of sorbitol as humectant and, proportioned therewith to provide a creamy or gel consistency in amount of 0.2 to 10% by weight, a gelling agent composition consisting essentially of xanthan and guar gum, the weight ratio of xanthan to guar gum being from 1:3 to 1:10.

4,374,824

DENTIFRICE

Hakeem V. R. Wahmi, Hyderabad, India, assignor to Krishan Dyal Mathur, Alexandria, Va.

Filed Jan. 27, 1981, Ser. No. 228,791

Int. Cl.³ A61K *7/16, 7/26*

U.S. Cl. 424—58 **4 Claims**

1. A dentifrice composition comprising 2.0–10.0% by weight ginger, 6.0–16.0% by weight magnesium silicate, 6.0–16.0% by weight sodium chloride, 6.0–16.0% by weight borax, 2.0–20.0% by weight catechu; 4.0–14.0% by weight piper nigrum, 4.0–14.0% by weight alum, 2.0–16.0% by weight seed and shell of sweet almond, 2.0–14.0% by weight pyrethrum, 4.0–20.0% by weight mastic, and 4.0–20.0% by weight tobacco.

4,374,825

HAIR CONDITIONING COMPOSITIONS

Raymond E. Bolich, Jr., Maineville; Lloyd B. Hartsough, and Philip E. Cothran, both of Cincinnati, all of Ohio, assignors to The Proctor & Gamble Company, Cincinnati, Ohio

Continuation-in-part of Ser. No. 218,376, Dec. 22, 1980, abandoned, which is a continuation-in-part of Ser. No. 128,436, Mar. 10, 1980, abandoned. This application Feb. 17, 1981, Ser. No. 234,297

Int. Cl.³ A61K *7/06*

U.S. Cl. 424—70 **16 Claims**

1. A hair conditioning composition in the form of an emulsion comprising:

(A) from about 1% to about 13% of a volatile liquid hair conditioning agent having a boiling point in the range of from about 99° C. to about 260° C. and a solubility in water of less than about 0.1% selected from the group consisting of hydrocarbons, silicones and mixtures thereof;

(B) from about 0.1% to about 8% of a substantially nonionic, water soluble polymer having a viscosity in excess of about 200 poises at a shear of about 10^{-2} sec^{-1} while having a viscosity less than about 9 poises at a shear of about 500 sec^{-1};

(C) from about 0.05% to about 4% of a cationic hair conditioning agent selected from the group consisting of quaternary ammonium salts or salts of fatty amines; and

(D) water.

4,374,826

SULFONAMIDE COMPOSITIONS

William W. Armstrong, Mill Neck, N.Y., assignor to Pfizer Inc., New York, N.Y.

Division of Ser. No. 170,490, Jul. 21, 1980, which is a continuation of Ser. No. 54,546, Jul. 5, 1979, abandoned. This application Jul. 10, 1981, Ser. No. 282,109

Int. Cl.³ A61K *31/79, 31/625*

U.S. Cl. 424—80 **3 Claims**

3. A sulfonamide composition comprising an aqueous solution of about 20% w/v sulfadoxine, about 4% w/v trimethoprim, from about 60% to 80% w/v 2-pyrrolidone and from 1 to 5% w/v of polyvinylpyrrolidone, said composition having a pH value in the range of from about 7 to 9.5.

4,374,827

WATER SOLUBLE EXTRACT FROM NONPATHOGENIC AEROBIC CORYNEBACTERIA

Tiuzi Sindo; Tadashi Obara, both of Tokyo, and Hidenari Adachi, Osaka, all of Japan, assignors to Yamanouchi Pharmaceutical Co., Ltd., Tokyo, Japan

Continuation-in-part of Ser. No. 179,798, Aug. 20, 1980, abandoned. This application May 28, 1981, Ser. No. 267,768

Claims priority, application Japan, Aug. 30, 1979, 54-110724

Int. Cl.³ A61K *39/02, 35/78, 37/00*

U.S. Cl. 424—92 **4 Claims**

1. A water soluble extract from *corynebacterium equi* Ko-85 Strain, the water soluble extract having a weight of protein content calculated as Bovine Serum Albumin to sugar content calculated as glucose of from 7.50:1 to 13.42:1, the ratio of the optical density at 260 nm to that at 280 nm from 1.56 to 1.62, an isoelectric point of 3.75–3.80, and having a suppressive effect on immunoglobulin E (IgE) antibody.

4,374,828

BIOLOGICALLY ACTIVE THYMONES FROM THE THYMUS

Karl Folkers; Teresa M. Kubiak; Henryk M. Stepien, all of Austin, Tex., and Naoki Sakura, Ohkuwa, Japan, assignors to Board of Regents, The University of Texas System, Austin, Tex.

Filed Nov. 17, 1980, Ser. No. 199,997

Int. Cl.³ A61K *37/00*

U.S. Cl. 424—177 **4 Claims**

1. A class of biologically active substances from thymus tissue consisting essentially of thymone A, having

an electrophoretic Rf of 0.37, relative to lysine, in the solvent system, pyridine-acetic acid-water (4:1:45) at pH 5.3, 800 V, 22 mA, 15 min. (cellulose plates, 10×20 cm);

an electrophoretic Rf of 0.33, relative to lysine, in the solvent system, pyridine-acetic acid-water (1:10:190) at pH 3.5, 1000 V, 6 mA, 20 min. (cellulose plates, 10×20 cm);

an electrophoretic Rf of 0.28, relative to lysine, in the solvent system pyridine-acetic acid-water (10:0.4:89.6) at pH 6.45, 2000 V, 6 mA, 10 min. (cellulose plates, 10×20 cm);

approximately 68 to 71 amino acid; as moieties representing approximately 14 amino acids: aspartic acid—4 to 5 units; threonine—4 units; serine—6 units; glutamic acid—9–10 units; proline—8 units; glycine—6 units; alanine—5 to 6 units; valine—3 to 4 units; methionine—1 unit; isoleucine—1 to 2 units; leucine—3 units; histidine—2 units; lysine—11 to 12 units; arginine—3 to 4 units; and

biological activities to stimulate the proliferation of lymphocytes and the formation of cyclic adenosine monophosphate;

thymone B, having

an electrophoretic Rf of 0.05, relative to lysine; phridine:AcOH:H_2O (2.6:30:876) pH 3.5; 1000 V, 3 mA, 20 min. (cellulose plates 5×20 cm);

a TLC Rf of 0.53; n-BuOH:pyridine:AcOH:H_2O (30:30:6:24) (Silica gel plates, 5×10 cm);

a TLC Rf of 0.48; EtOAc:pyridine:AcOH:H_2O (5:5:1:3) (Silica gel plates, 5×10 cm);

a TLC Rf of 0.61; n-BuOH:AcOH:H_2O (1:1:3:1) (Silica gel plates, 5×10 cm);

as moieties representing approximately the 13 amino acids: aspartic acid, threonine, serine, glutamic acid, proline, glycine, alanine, valine, isoleucine, leucine, histidine, lysine, arginine; and

biological activities to stimulate the proliferation of lymphocytes and the formation of cyclic guanosine monophosphate; and

thymone C, having the ability to stimulate the proliferation of lymphocytes,

being extractable by methanol or acetic acid from defatted thymus tissue,

having a retention time similar to thymone A on CM-Sephadex chromatography, and

being separated from lymphocyte proliferation inhibitory substances by chromatography on DEAE-Sephadex A-25 chromatography followed by CM-Sephadex C-25 chromatography.

4,374,829

AMINOACID DERIVATIVES AS ANTIHYPERTENSIVES

Elbert E. Harris; Arthur A. Patchett, both of Westfield; Edward W. Tristram, Watchung, and Matthew J. Wyvratt, Mountainside, all of N.J., assignors to Merck & Co., Inc., Rahway, N.J.

Continuation-in-part of Ser. No. 79,898, Oct. 9, 1979, abandoned, which is a continuation-in-part of Ser. No. 36,279, May 7, 1979, abandoned, which is a continuation-in-part of Ser. No. 968,249, Dec. 11, 1978, abandoned. This application Feb. 17, 1981, Ser. No. 235,335

Int. Cl.³ A61K *37/00;* **C07C** *103/52;* **C07D** *207/24*

U.S. Cl. 424—177 **82 Claims**

1. A compound of the formula:

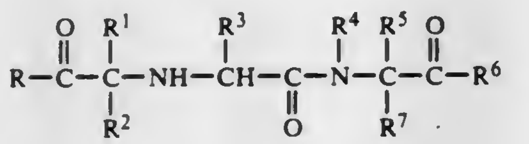

wherein

R and R^6 are the same or different and are hydroxy,
lower alkoxy,
lower alkenoxy,
diloweralkylamino lower alkoxy,
acylamino lower alkoxy,
acyloxy lower alkoxy,
aryloxy,
arloweralkyloxy
substituted aryloxy or substituted arloweralkoxy wherein the substituent is methyl, halo, or methoxy,
amino,
loweralkylamino
diloweralkylamino,
arloweralkylamino or
hydroxyamino;

R^1 is hydrogen,
alkyl of from 1 to 20 carbon atoms, including branched, cyclic and unsaturated alkyl groups;
substituted lower alkyl wherein the substituent is
halo
hydroxy
lower alkoxy
aryloxy
amino
loweralkylamino
diloweralkylamino
acylamino
arylamino
guanidino
imidazolyl,
indolyl,
mercapto,
loweralkylthio
arylthio
carboxy
carboxamido
carboloweralkoxy
phenyl
substituted phenyl wherein the substituent is
lower alkyl
lower alkoxy or
halo;
arloweralkyl or heteroarloweralkyl,
arloweralkenyl or heteroarloweralkenyl,
substituted arloweralkyl, substituted heteroarloweralkyl, substituted arloweralkenyl or substituted heteroarloweralkenyl, wherein the substituent is halo or dihalo
lower alkyl
hydroxy
lower alkoxy
amino
aminomethyl
acylamino
diloweralkylamino
loweralkylamino
carboxyl
halo loweralkyl
cyano or
sulfonamido;
arloweralkyl or heteroarloweralkyl substituted on the alkyl portion by amino or acylamino;

R^2 and R^7 are hydrogen or lower alkyl;

R^3 is hydrogen
lower alkyl
phenyl lower alkyl
aminomethyl phenyl lower alkyl
hydroxy phenyl lower alkyl
hydroxy lower alkyl
acetylamino lower alkyl
acylamino lower alkyl
amino lower alkyl
dimethylamino lower alkyl
halo lower alkyl
guanidino lower alkyl
imidazolyl lower alkyl
indolyl lower alkyl
mercapto lower alkyl and
loweralkylthio lower alkyl;

R^4 is hydrogen or
lower alkyl;

R^5 is hydrogen
lower alkyl
phenyl
phenyl lower alkyl
hydroxy phenyl lower alkyl
hydroxy lower alkyl
amino lower alkyl
guanidino lower alkyl
imidazolyl lower alkyl
indolyl lower alkyl
mercapto lower alkyl or
loweralkyl thio lower alkyl;

R^4 and R^5 may be connected together to form an alkylene bridge of from 2 to 4 carbon atoms, an alkylene bridge of from 2 to 3 carbon atoms and one sulphur atom, an alkylene bridge of from 3 to 4 carbon atoms containing a double bond or an alkylene bridge as above, substituted with
hydroxy
lower alkoxy

lower alkyl or
dilower alkyl

and the pharmaceutically acceptable salts thereof wherein said aryl is a member selected from the group consisting of phenyl or naphthyl and said heteroaryl is a member selected from the group consisting of pyridyl, thienyl, furyl, indolyl, benzthienyl, imidazolyl, or thiazolyl.

4,374,830

PLATELET AGGREGATING MATERIAL FROM EQUINE ARTERIAL TISSUE

Morris D. Schneider, Knoxville, Tenn., assignor to Research Corp., New York, N.Y.

Continuation-in-part of Ser. No. 81,974, Oct. 4, 1979, abandoned, which is a continuation of Ser. No. 875,730, Feb. 7, 1978, abandoned. This application Aug. 12, 1981, Ser. No. 292,201

Int. Cl.³ A61K *37/02, 37/12;* **C12P** *21/06;* **C12N** *9/00;* **C07G** *7/00*

U.S. Cl. 424—177 **27 Claims**

1. A method of preparing a hemostatic composition comprising the steps of:

(a) contacting cleaned, homogenized equine arterial tissue with a balanced salt solution to provide an aqueous extract containing extracted collagen material and unextracted arterial tissue, and

(b) separating unextracted arterial tissue from said aqueous mixture to provide an extract containing an arterial collagen material,

said extract being capable of stimulating the aggregation of platelets in plasma or whole blood and containing a proteinaceous hemostatic agent characterized by the ability to enhance platelet aggregating activities in mammalian blood, being stable for extended periods of time at temperatures as low as −85° C., stable at 56° C. for up to 60 minutes, and when exposed to α-chymotrypsin, losing its platelet aggregating activity when exposed to collagenase at 37° C. or when heated at 100° C. for 15 minutes; containing a product having the following average number of amino acid residues per 1000 total amino acid residue:

Lysine	29.8	Glycine	206.5
Histidine	31.2	Alanine	133.9
Hydroxylysine	4.8	½ Cysteine	13.2
Arginine	43.2	Valine	57.6
Hydroxyproline	20.1	Methionine	14.2
Aspartic Acid	65.4	Isoleucine	26.7
Threonine	38.1	Leucine	52.5
Serine	40.3	Tyrosine	15.3
Glutamic Acid	81.9	Phenylalanine	27.1
Proline	98.2		

19. A hemostatic agent isolatable from equine arterial tissue by extraction with aqueous solutions which is an equine arterial fibrillar collagen capable of stimulating the aggregation of platelets in plasma or whole blood and containing a proteinaceous hemostatic agent characterized by the ability to enhance platelet aggregating activities in mammalian blood, being stable for extended periods of time at temperatures as low as −85° C., stable at 56° C. for up to 60 minutes, and when exposed to α-chymotrypsin, losing its platelet aggregating activity when exposed to collagenase at 37° C. or when heated at 100° C. for 15 minutes; containing a product having the following average number of amino acid residues per 1000 total amino acid residue:

-continued

Lysine	29.8	Glycine	206.5
Histidine	31.2	Alanine	133.9
Hydroxylysine	4.8	½ Cysteine	13.2
Arginine	43.2	Valine	57.6
Hydroxyproline	20.1	Methionine	14.2
Aspartic Acid	65.4	Isoleucine	26.7
Threonine	38.1	Leucine	52.5
Serine	40.3	Tyrosine	15.3
Glutamic Acid	81.9	Phenylalanine	27.1
Proline	98.2		

4,374,831

MODULATORS OF THE COMPLEMENT SYSTEM COMPRISING BIS-GLUCOPYRANOSYL ARYLENE SULFATE DERIVATIVES

Joseph P. Joseph, Montvale, N.J., and Seymour Bernstein, New City, N.Y., assignors to American Cyanamid Company, Stamford, Conn.

Filed Dec. 28, 1981, Ser. No. 334,939

Int. Cl.³ A61K *31/72;* **C07H** *13/12*

U.S. Cl. 424—180 **23 Claims**

1. A compound selected from those of the formula:

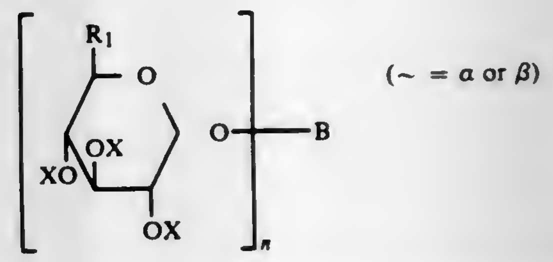

(∼ = α or β)

wherein X is $-SO_3M$ and M is a nontoxic pharmaceutically acceptable cation salt, wherein the salt forming moiety is selected from the group consisting of alkali metal, alkaline earth metal, aluminum, ammonia and substituted ammonia selected from the group consisting of trialkylamine (C_1–C_6), piperidine, pyrazine, alkanolamine (C_2–C_6) and cycloalkylamine (C_3–C_6); R_1 is selected from the group consisting of CH_2OX, COOH and COONa; n is an integer 2 or 3; and B is an arylene selected from the group consisting of:

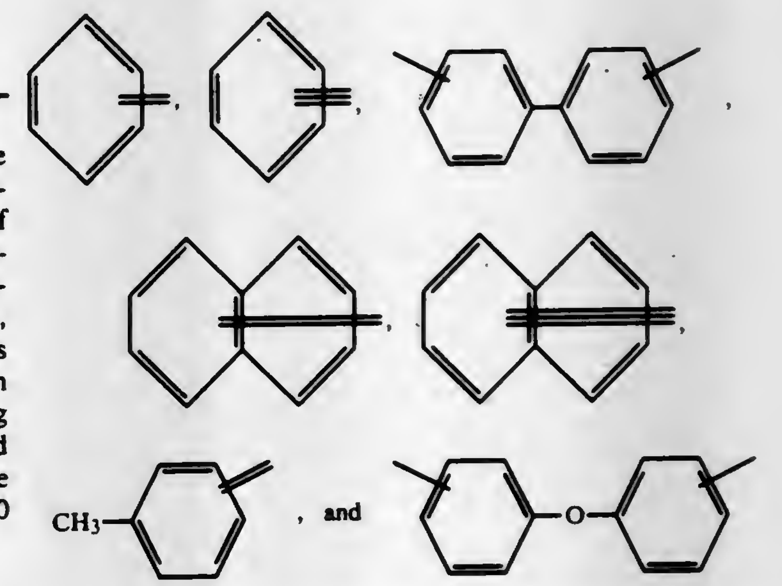

11. A method of modulating the complement system in a body fluid which comprises subjecting said body fluid to the action of an effective complement modulating amount of a pharmaceutically acceptable compound selected from those of the formula of claim 1.

4,374,832

MODULATORS OF THE COMPLEMENT SYSTEM COMPRISING POLYHEXAOSE ARYLENE SULFATE DERIVATIVES

Joseph P. Joseph, Montvale, N.J., and Seymour Bernstein, New City, N.Y., assignors to American Cyanamid Company, Stamford, Conn.

Filed Dec. 28, 1981, Ser. No. 334,940
Int. Cl.³ A61K *31/72;* **C07H** *13/12*
U.S. Cl. 424—180 **17 Claims**

1. A compound selected from those of the formula:

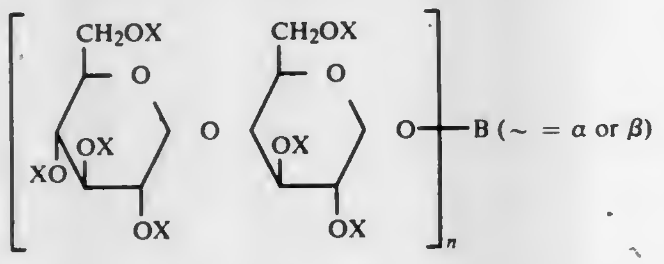

wherein X is —SO_3M and M is a nontoxic pharmaceutically acceptable cation salt, wherein the salt forming moiety is selected from the group consisting of alkali metal, alkaline earth metal, aluminum, ammonia and substituted ammonia selected from the group consisting of trialkylamine (C_1–C_6), piperidine, pyrazine, alkanolamine (C_2–C_6) and cycloalkylamine (C_3–C_6); n is an integer 2 or 3; and B is an arylene selected from the group consisting of:

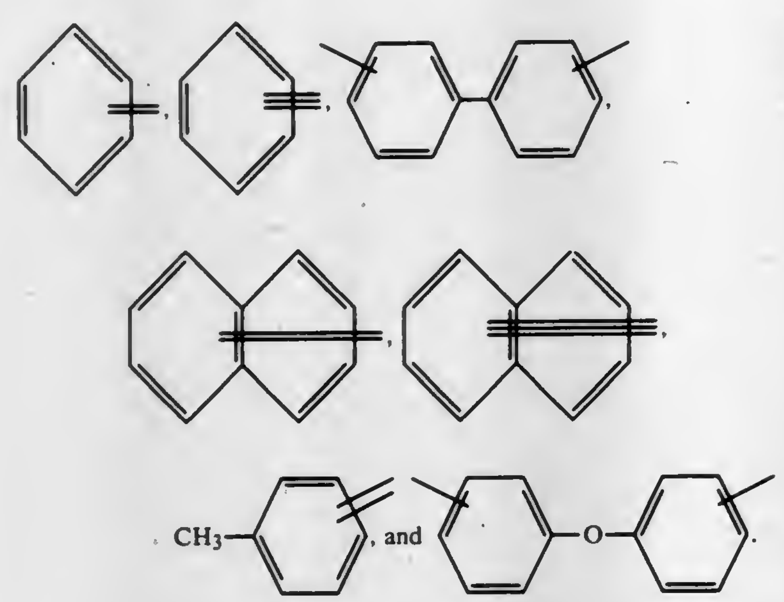

7. A method of modulating the complement system in a body fluid which comprises subjecting said body fluid to the action of an effective complement modulating amount of a pharmaceutically acceptable compound selected from those of the formula of claim 1.

4,374,833

PYRETHROID PESTICIDAL COMPOSITION

John S. Badmin, and Barry J. Mears, both of Sittingbourne, England, assignors to Shell Oil Company, Houston, Tex.

Filed Jul. 24, 1981, Ser. No. 286,508
Claims priority, application United Kingdom, Aug. 20, 1980, 8027082; Jan. 12, 1981, 8100800
Int. Cl.³ A01N *37/34, 57/00*
U.S. Cl. 424—225 **1 Claim**

1. A method of combating mites at a locus which comprises applying to the locus a miticidally effective amount of a composition comprising

(a) the compound of formula I

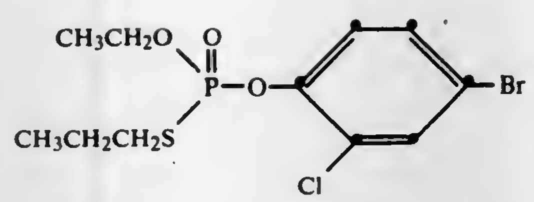

I

and

(b) the compound of formula II

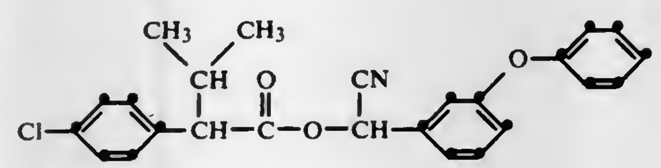

II

in a ratio of (a) to (b) of 1:80.

4,374,834

NOVEL COMPOUNDS

Rene Heymes, Romainville, and Andre Lutz, Strasbourg, both of France, assignors to Roussel Uclaf, Paris, France

Division of Ser. No. 26,767, Apr. 3, 1979, Pat. No. 4,287,193. This application Mar. 26, 1981, Ser. No. 247,743
Claims priority, application France, Apr. 7, 1978, 78 10287
Int. Cl.³ A61K *31/545*
U.S. Cl. 424—246 **9 Claims**

1. A compound selected from the group consisting of syn isomers of 7-[2-(2-amino-4-thiazolyl)-2-(carboxymethyloxyimino)-acetamido]-ceph-3-eme-4-carboxylic acid compounds of the formula

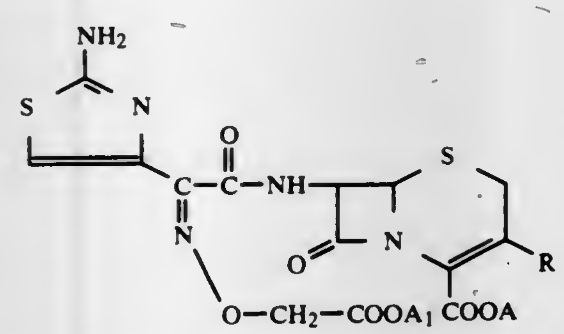

wherein R is alkyl of 1 to 3 carbon atoms, A is selected from the group consisting of hydrogen, alkali metal, alkaline earth metal, —NH_4, an easily cleavable ester and a non-toxic, pharmaceutically acceptable organic amine, A_1 is selected from the group consisting of alkyl of 1 to 3 carbon atoms, hydrogen, alkali metal, alkaline earth metal, —NH_4, an easily cleavable ester and a non-toxic, pharmaceutically acceptable organic amine and non-toxic, pharmaceutically acceptable acid addition salts thereof.

4. An antibiotic composition comprising an antibiotically effective amount of at least one compound of claim 1 and an inert pharmaceutical carrier.

4,374,835

PIPERAZINE DERIVATIVES OF THEOPHYLLINE

Colette Favier, Neuilly-sur-Seine; Henri Pinhas, Paris; Serge Beranger, Bretigny-sur-Orge, and Jean-Claude Pascal, Cachan, all of France, assignors to Laroche-Navarron, S.A., Puteaux, France

Filed Jan. 12, 1981, Ser. No. 224,710
Claims priority, application United Kingdom, Jan. 31, 1980, 8003212
Int. Cl.³ C07D *473/08;* **A61K** *31/52*
U.S. Cl. 424—250 **8 Claims**

1. A compound of the formula

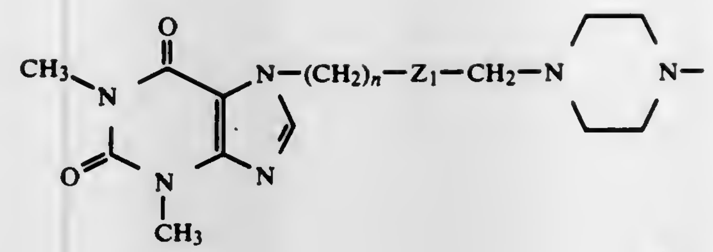

(I)

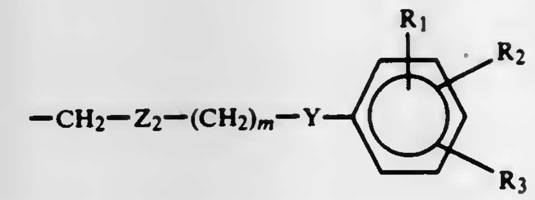

and the pharmaceutically acceptable acid addition salts thereof, wherein

Z_1 and Z_2 are each independently selected from the group consisting of CH_2, CHOB and C═O, wherein B is selected from the group consisting of hydrogen and alkanoyl;

Y is oxygen or sulfur;

n is an integer from 0–4 but cannot be zero when Z_1 is CHOB;

m is an integer from 0–4 but cannot be zero when Z_2 is CHOB; and

R_1, R_2 and R_3 are each independently hydrogen, halogen, hydroxy, trifluoromethyl, alkyl or alkoxy.

7. A composition for the treatment of respiratory diseases in mammals which comprises an effective amount of the compound of claim 1 or a pharmaceutically acceptable acid addition salt thereof, in admixture with at least one pharmaceutically acceptable, non-toxic excipient.

4,374,836

ANTISECRETORY HETEROCYCLIC DERIVATIVES, PROCESS FOR THEIR MANUFACTURE AND PHARMACEUTICAL COMPOSITIONS CONTAINING THEM

Tobias O. Yellin, Wallingford, Pa., and Derrick F. Jones, Tytherington, England, assignors to Imperial Chemical Industries Ltd., London, England and ICI Americas Inc., Wilmington, Del.

Filed Oct. 10, 1979, Ser. No. 83,479
Claims priority, application United Kingdom, Oct. 16, 1978, 40706/78
Int. Cl.³ A61K *31/505;* **C07D** *417/12*
U.S. Cl. 424—251 **13 Claims**

1. A heterocyclic derivative of the following formula (I):

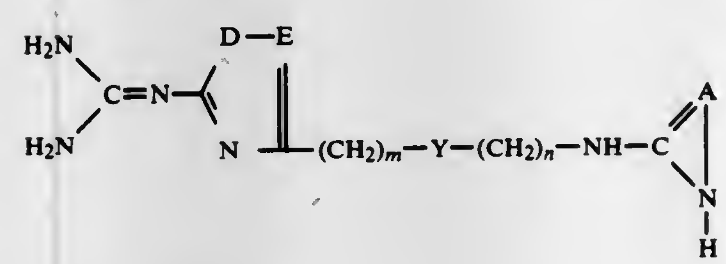

(I)

in which

D is an oxygen or sulphur atom or an NH radical;

E is a CH radical or, when D is an oxygen or sulphur atom, E is a nitrogen atom;

Y is a sulphur or oxygen atom, a direct bond or a methylene or sulphinyl radical;

m is 0 to 4 and n is 1 to 4, provided that when Y is a sulphur or oxygen atom or a sulphinyl radical m is 1 to 4, and when Y is an oxygen atom or a sulphinyl radical, n is 2 to 4; and

the ring which includes chain A is of the following formula (II):

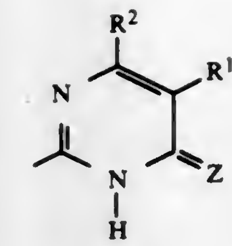

(II)

in which

Z is an oxygen or sulphur atom; and

R^1 and R^2, which may be the same or different, are hydrogen atoms or are radicals selected from alkyl radicals of 1 to 6 carbon atoms, and benzyl, naphthylmethyl, 2-phenethyl, 4-phenylbutyl, pyridylmethyl, thiazolylmethyl, thienylmethyl, benzyloxy, pyridylmethoxy and phenoxymethyl radicals each optionally substituted on the aromatic ring system by one to three substitutents selected from halogen atoms and methyl, methoxy, trifluromethyl, dimethylamino, phenyl and phenoxy radicals; and the pharmaceutically-acceptable acid-addition salts thereof.

12. A pharmaceutical composition comprising a heterocyclic derivative as claimed in claim 1 in association with a non-toxic pharmaceutically-acceptable diluent or carrier.

4,374,837

PIPERAZINE DERIVATIVES OF THEOBROMINE

Colette Favier, Neuilly-sur-Seine; Henri Pinhas, Paris; Serge Beranger, Bretigny-sur-Orge, and Jean-Claude Pascal, Cachan, all of France, assignors to Laroche Navarron, S.A., Palo Alto, Calif.

Filed Jul. 31, 1981, Ser. No. 288,847
Int. Cl.³ A61K *31/52;* **C07D** *473/10*
U.S. Cl. 424—253 **7 Claims**

1. A compound of the formula

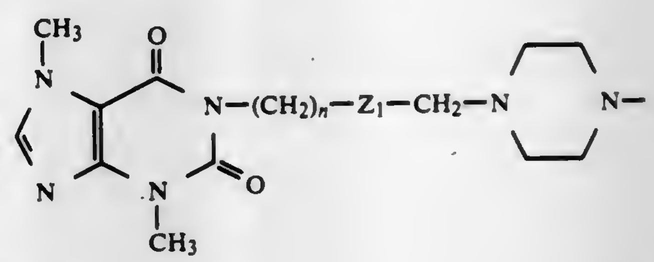

(I)

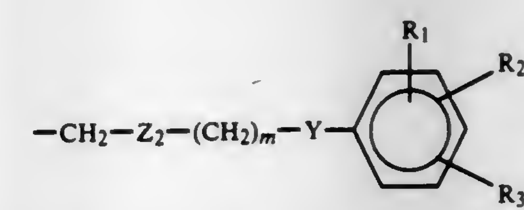

and the pharmaceutically acceptable acid addition salts thereof, wherein

Z_1 and Z_2 are each independently selected from the group consisting of CH_2, CHOB and C═O, wherein B is selected from the group consisting of hydrogen and alkanoyl;

Y is oxygen or sulfur;

n is an integer from 0–4 but cannot be zero when Z_1 is CHOB;

m is an integer from 1–4 but cannot be zero when Z_2 is CHOB; and

R_1, R_2 and R_3 are each independently hydrogen, halogen, hydroxy, trifluoromethyl, alkyl or alkoxy.

5. A method for treating respiratory diseases in mammals, which method comprises administering to a subject in need of such treatment, an effective amount of, or a pharmaceutical composition containing an effective amount of a compound of claim 1 or a pharmaceutically acceptable acid addition salt thereof.

4,374,838

DIBENZO[a,d]CYCLOOCTEN-5,12-(AND 6,12)-IMINES

Paul S. Anderson, Lansdale; Marcia E. Christy, Perkasie; Ben E. Evans, Lansdale, and David C. Remy, North Wales, all of Pa., assignors to Merck & Co., Inc., Rahway, N.J.

Division of Ser. No. 80,896, Oct. 1, 1979, Pat. No. 4,329,465, which is a continuation-in-part of Ser. No. 917,044, Jun. 19, 1978, abandoned, which is a continuation-in-part of Ser. No. 834,343, Sep. 19, 1977, abandoned. This application Oct. 22, 1981, Ser. No. 313,900

Int. Cl.³ A61K *31/435*

U.S. Cl. 424—256 **4 Claims**

1. A method of treating anxiety, depression, muscle spasm, convulsions, mixed anxiety-depression, minimal brain dysfunction and extrapyramidal disorders comprising administering to a patient in need of such treatment an effective amount of a compound of structural formula:

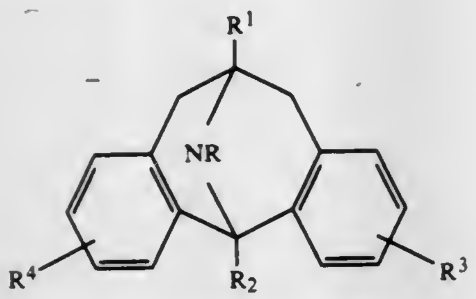

or a pharmaceutically acceptable salt thereof, wherein R is hydrogen or C_{1-3}alkyl; R^2 is C_{1-3}alkyl, and R^1, R^3 and R^4 are all hydrogen.

4,374,839

PHARMACOLOGICALLY ACTIVE 1,3-BIS[(2-HETEROCYCLYL-METHYL-THIO)ETHYL)ETHYL)GUANIDINO]ALKANE DERIVATIVES

Graham J. Durant; Charon R. Ganellin, both of Welwyn Garden City, and George S. Sach, Welwyn, all of England, assignors to SmithKline & French Laboratories Limited, Welwyn Garden City, England

Division of Ser. No. 97,297, Nov. 26, 1979, Pat. No. 4,269,844, which is a division of Ser. No. 948,617, Oct. 4, 1978, Pat. No. 4,210,652, which is a division of Ser. No. 816,420, Jul. 18, 1977, Pat. No. 4,139,624. This application Nov. 24, 1980, Ser. No. 209,452

Claims priority, application United Kingdom, Jul. 28, 1976, 31392/76

Int. Cl.³ A61K *31/44;* C07D *413/12, 417/12, 401/12*

U.S. Cl. 424—263 **9 Claims**

1. A compound of the formula

$$R^1NH-\overset{X^1}{\overset{\|}{C}}-W-(CH_2)_q-W-\overset{X^2}{\overset{\|}{C}}-NHR^2$$

wherein X^1 and X^2, which may be the same or different, are each NY where Y is hydrogen, hydroxy or lower alkyl; R^1 is a grouping of the structure

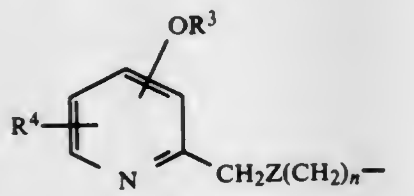

wherein R^3 is lower alkyl or —$(CH_2)_p$A where p is 2 to 4, and A is hydroxy, lower alkoxy or dimethylamino; R^4 is hydrogen, lower alkyl, lower alkoxy, amino, halogen or methylamino; Z is sulphur or methylene; n is 2 or 3; R^2 has the same scope as R^1 or is a grouping of the structure

$$Het-(CH_2)_{m'}Z'(CH_2)_{n'}-$$

wherein Het is a nitrogen containing 5 or 6 membered heterocyclic ring selected from the group consisting of imidazole, pyridine, thiazole, isothiazole, oxazole, isoxazole, pyrazole, triazole and thiadiazole which is optionally substituted by lower alkyl, hydroxy, halogen or amino; Z' is sulphur or methylene; m' is 0, 1 or 2; n' is 2 or 3 and the sum of m' and n' is 3,4; W is NH, and when X^1 and X^2 are both NH, W may also be sulphur; and q is an integer from 2 to 8 or a pharmaceutically acceptable acid addition salt thereof.

9. A method of inhibiting H-2 histamine receptors which comprises administering orally or parenterally to an animal in need thereof in an effective amount to inhibit said receptors a compound of claim 1.

4,374,840

CERTAIN PHENYL OR PYRIDYL-PROPANOL-AMINES CONTAINING ALKYL-NITRATE MOIETIES

Masami Shiratsuchi, Musashimurayama; Noboru Shimizu, Higashimurayama; Hiromichi Shigyo, Fuchu; Yoshinori Kyotani, Higashiyamato; Hisashi Kunieda, Higashimurayama; Kiyoshi Kawamura, Tokorozawa; Seiichi Sato; Toshihiro Akashi, both of Higashimurayama; Masahiko Nagakura, Sayama; Naotoshi Sawada, Kawasaki, and Yasumi Uchida, Ichikawa, all of Japan, assignors to Kowa Company, Ltd., Aichi, Japan

Filed Feb. 11, 1981, Ser. No. 233,643

Claims priority, application Japan, Feb. 13, 1980, 55-15433

Int. Cl.³ A61K *31/44, 31/135;* C07D *213/74*

U.S. Cl. 424—263 **3 Claims**

1. A compound represented by the following formula

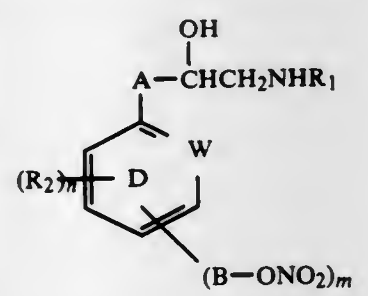

wherein

A represents —O—CH_2—

B represents a C_1-C_{11} alkylene group bonded to a carbon atom of the aromatic or heteroaromatic ring D either directly or through an —O— or —S— moiety,

W represents a carbon or nitrogen atom,

R_1 represents a C_3-C_7 alkyl group, a hydroxy-C_1-C_6 alkyl group, or a phenyl- or diphenyl-alkyl group with the alkyl group having 1 to 4 carbon atoms,

R_2 represents hydrogen, halogen, OH, C_1-C_4 alkyl, NO_2, C_1-C_4 alkoxy, acetyl or allyloxy, and when two R_2 groups exist, they may be identical or different,

n represents 1 or 2 and m represents 1 or 2; and a pharmaceutically acceptable acid addition salt thereof.

2. A pharmaceutical composition comprising an effective amount, effective for the treatment of angina, hypertension or arrhythmia of a compound or a pharmaceutically acceptable salt thereof, said compound represented by the following formula

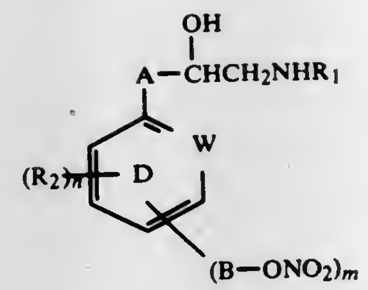

wherein

A represents —O—CH_2—

B represents a C_1-C_{11} alkylene group bonded to a carbon atom of the aromatic or heteroaromatic ring D either directly or through an —O— or —S— moiety,

W represents a carbon or nitrogen atom,

R_1 represents a C_3-C_7 alkyl group, a hydroxy-C_1-C_6 alkyl group, or a phenyl- or diphenyl-alkyl group with the alkyl group having 1 to 4 carbon atoms,

R_2 represents hydrogen, halogen, OH, C_1-C_4 alkyl, NO_2, C_1-C_4 alkoxy, acetyl, or allyloxy, and when two R_2 groups exist, they may be identical or different,

n represents 1 or 2 and m represents 1 or 2; and a pharmaceutically acceptable diluent or carrier.

4,374,841

PYRIDOXINE DERIVATIVES, AND USE IN THERAPEUTICS

Marcel Descamps, Rosieres, Belgium; Marcel Urbain, deceased, late of Waterloo, Belgium; Claire Urbain, legal representative, Waterloo, Belgium; Jacques J. Z. Urbain, legal representative, Lasne, Belgium; Jean P. M. C. Urbain, legal representative, and Nadine C. J. Urbain, legal representative, both of Waterloo, Belgium, assignors to S. A. Labaz N.V., Brussels, Belgium

Filed May 11, 1981, Ser. No. 262,449

Claims priority, application United Kingdom, May 19, 1980, 8016516

Int. Cl.³ C07D *213/67;* A61K *31/44*

U.S. Cl. 424—263 **7 Claims**

1. A pyridoxine derivative represented by the general formula:

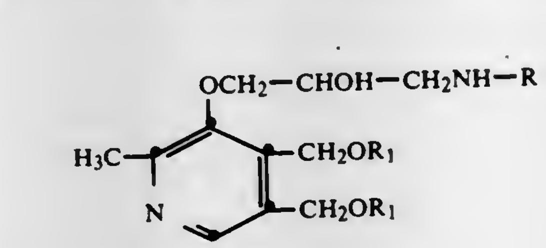

in which: R represents a radical

$$-\underset{X}{\underset{|}{CH}}-\underset{X_1}{\underset{|}{CH}}-OR_2,$$

$$-CH_2-(CH_2)_n-CH_2OR_2 \text{ or}$$

$$-\underset{Y}{\underset{|}{CH}}-(CH_2)_n-CH_2R_2$$

in which n represents 0 or 1, X and X_1, which are different, represent hydrogen or methyl, Y represents hydrogen or methyl and R_2 represents a phenyl group non-substituted or bearing one or two substituents selected from the group consisting of fluorine, chlorine and bromine and of the radicals methyl, ethyl, n-propyl, isopropyl and methoxy,

R_1 represents hydrogen as well as a pharmaceutically acceptable acid addition salt thereof.

4,374,842

4,1-BENZOXAZEPINES AND COMPOSITIONS

Kentaro Hirai, Kyoto; Shigeru Matsutani, Sakai; Itsuo Makino, Kobe, and Teruyuki Ishiba, Takatsuki, all of Japan, assignors to Shionogi & Co., Ltd., Osaka, Japan

Filed Apr. 2, 1981, Ser. No. 250,299

Claims priority, application Japan, Apr. 18, 1980, 55-52185; Sep. 29, 1980, 55-136646

The portion of the term of this patent subsequent to Oct. 27, 1998, has been disclaimed.

Int. Cl.³ A61K *31/55;* C07D *498/14*

U.S. Cl. 424—269 **3 Claims**

1. A member selected from the group consisting of a compound of the formula

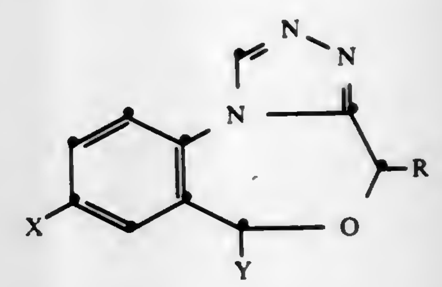

wherein

X is halogen,

Y is 2-halophenyl or 4-halophenyl, and

R is hydrogen or C_1 —C_5 alkyl

an a non-toxic pharmaceutically acceptable acid addition salt thereof.

3. A pharmaceutical composition having central nervous system activity comprising an amount of a compound or salt thereof as defined in claim 1 sufficient to achieve central nervous system activity together with a pharmaceutically acceptable carrier, diluent and/or excipient.

4,374,843

2-GUANIDINO-4-HETEROARYLTHIAZOLES

John L. La Mattina, Ledyard, and Christopher A. Lipinski, Waterford, both of Conn., assignors to Pfizer Inc., New York, N.Y.

Continuation-in-part of Ser. No. 196,231, Oct. 14, 1980, abandoned. This application Aug. 20, 1981, Ser. No. 293,574

Int. Cl.³ C07D *417/04;* A61K *31/425*

U.S. Cl. 424—270 **36 Claims**

1. A compound of the formula

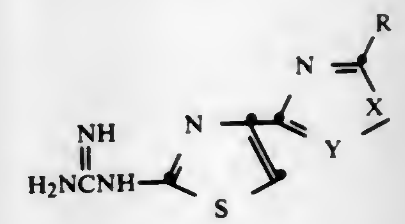

and the pharmaceutically acceptable acid addition salts thereof,

wherein X is S or NH; Y is CH, C.CH_3 or N; R is hydrogen, hydroxymethyl, alkyl of 1 to 6 carbon atoms, —$(CH_2)_n$Ar, —NH_2, —NHR_1 or —$NHCOR_1$, wherein R_1 is alkyl of 1 to 6 carbon atoms or —$(CH_2)_m$Ar; n is an integer from 2 to 4; m is zero or an integer from 1 to 4; Ar is phenyl or phenyl monosubstituted with chloro, bromo, fluoro, alkyl of 1 to 3 carbon atoms or alkoxy of 1 to 3 carbon atoms; provided that when Y is N, X is NH and m is other than

zero; and when X is S, R is other than hydroxymethyl, alkyl, or —$(CH_2)_n$Ar.

4,374,844
STABLE DERIVATIVES OF (5R,6S,8R)-6-HYDROXYETHYL-2-ETHYLTHIOPENEM-3-CARBOXYLIC ACIDS

Stuart W. Mc Combie, West Orange, N.J., assignor to Schering Corporation, Kenilworth, N.J.
Continuation-in-part of Ser. No. 219,410, Dec. 22, 1980, abandoned, which is a continuation-in-part of Ser. No. 91,610, Nov. 5, 1979, abandoned, which is a continuation-in-part of Ser. No. 62,875, Aug. 1, 1979, abandoned, which is a continuation-in-part of Ser. No. 2,471, Jan. 10, 1979, abandoned.
This application Oct. 30, 1981, Ser. No. 316,627
Claims priority, application European Pat. Off., Jan. 7, 1980, 80810004.4
Int. Cl.³ C07D *499/00;* A61K *31/425*
U.S. Cl. 424—270 10 Claims

1. Sodium (5R,6S,8R)-6-(1-hydroxyethyl)-2-ethylthiopenem-3-carboxylate substantially free from its enantiomer.

4,374,845
1-(7-CARBOXY-2-OCTYNYL)IMIDAZOLE DERIVATIVES, PHARMACEUTICAL COMPOSITIONS AND USE

Tadao Tanouchi, Takatsuki; Masanori Kawamura, Ibaraki, and Masaki Hayashi, Takatsuki, all of Japan, assignors to Kissei Pharmaceutical Co., Osaka and Ono Pharmaceutical Co., Ltd., Nagano, both of, Japan
Filed Oct. 22, 1981, Ser. No. 313,847
Claims priority, application Japan, Oct. 22, 1980, 55-146837
Int. Cl.³ A61K *31/415;* C07D *233/60*
U.S. Cl. 424—273 R 8 Claims

1. Imidazole derivatives of the general formula:

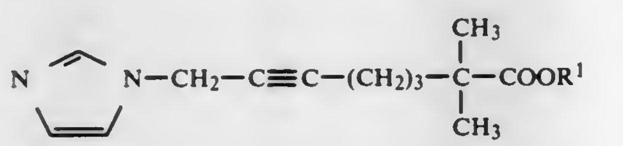
(1)

(wherein R¹ represents a hydrogen atom, or straight- or branched-chain alkyl group of 1 to 4 carbon atoms), or pharmaceutically acceptable non-toxic salts thereof.

4,374,846
N-AMINO ALKYL INDOLE COMPOUNDS COMPOSITIONS CONTAINING SAME, AND A METHOD OF USING SAME IN THERAPY OF DISORDERS OF GASTROINTESTINAL MOTILITY

Henning Heinemann; Heinrich-Wilhelm Ohlendorf, both of Hanover, and Klaus-Ulrich Wolf, Haenigsen, all of Fed. Rep. of Germany, assignors to Kali-Chemie Pharma GmbH, Hanover, Fed. Rep. of Germany
Filed Jul. 24, 1980, Ser. No. 172,023
Claims priority, application Fed. Rep. of Germany, Aug. 2, 1979, 2931323
Int. Cl.³ C07D *209/38;* A61K *31/40, 31/435;* C07D *401/06*
U.S. Cl. 424—274 15 Claims

1. An N-amino alkyl indole compound of Formula I

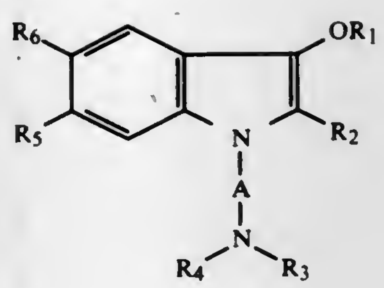
I

in which

R_1 indicates the hydrogen atom, an alkyl group with 1 to 4 carbon atoms, a phenyl substituted alkyl group with 1 to 4 alkyl carbon atoms, or an acetyl group;
R_2 indicates the hydroxy carbonyl group, an alkoxy carbonyl group with 1 to 4 alkyl carbon atoms, the cyano group, an amino carbonyl group, or a mono- or di-alkyl amino carbonyl group with 1 to 4 alkyl carbon atoms, with the provise that when R_2 is the hydroxy carbonyl group, then R_1 must be another substituent than the hydrogen atom;
A indicates an alkylene group with 2 to 5 carbon atoms;
R_3 and R_4 are the same or different substituents and indicate the hydrogen atom, an alkyl group with 1 to 4 carbon atoms, or R_3 and R_4 being an alkylene group and forming together with the nitrogen atom to which they are attached, a heterocyclic ring with 5 to 7 ring members; and
R_5 and R_6 are same or different and indicate the hydrogen atom, a halogen atom, an alkyl group with 1 to 3 carbon atoms, an alkoxy group with 1 to 3 carbon atoms, or one of the substituents R_5 and R_6 being the trifluoro methyl group or the nitro group while the other one indicates the hydrogen atom;

and the pharmaceutically acceptable acid addition salts of said indole compounds.

15. In a method of treating motility disorders of the gastrointestinal tract comprising administering an effective amount of an N-amino alkyl indole compound of claim 1.

4,374,847
1-CARBOXYALKANOYLINDOLINE-2-CARBOXYLIC ACIDS

Norbert Gruenfeld, White Plains, N.Y., assignor to Ciba-Geigy Corporation, Ardsley, N.Y.
Continuation-in-part of Ser. No. 200,706, Oct. 27, 1980, abandoned. This application Feb. 17, 1981, Ser. No. 235,294
Int. Cl.³ A61K *31/405;* C07D *209/26*
U.S. Cl. 424—274 17 Claims

1. A 1-carboxy-(alkanoyl or aralkanoyl)-indoline-2-carboxylic acid compound of the formula:

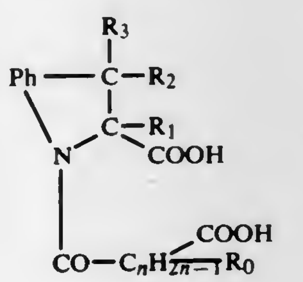

wherein Ph is unsubstituted 1,2-phenylene, or 1,2-phenylene substituted by one to three identical or different members selected from lower alkyl, lower alkoxy, lower alkylenedioxy, hydroxy, halogeno and trifluoromethyl; R_o is hydrogen or HPh; each of R_1, R_2 and R_3 is hydrogen or lower alkyl; and n is an integer from 2 to 8; an amide, mono- or di-lower alkylamide, lower alkyl ester, (amino, mono- or di-lower alkylamino, carboxy or lower carbalkoxy)-lower alkyl ester, or a pharmaceutically acceptable salt thereof.

4,374,848
6-(1-HYDROXYETHYL)CYCLONOCARDICIN

Burton G. Christensen, Cliffside Park; James V. Heck, Fanwood, and Michael J. Szymonifka, Rahway, all of N.J., assignors to Merck & Co., Inc., Rahway, N.J.
Filed Sep. 14, 1981, Ser. No. 301,544
Int. Cl.³ A61K *31/40;* C07D *487/14*
U.S. Cl. 424—274 3 Claims

1. A compound of the structure:

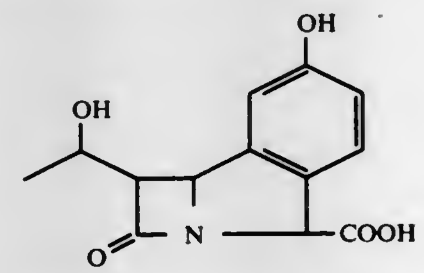

and the pharmaceutically acceptable salts and esters.

2. An antibiotic method of treatment comprising administering a therapeutically effective amount of a compound according to claim 1.

4,374,849
6-AMIDOCYCLONOCARDICINS

Burton G. Christensen, Cliffside Park, and James V. Heck, Fanwood, both of N.J., assignors to Merck & Co., Inc., Rahway, N.J.
Filed Sep. 14, 1981, Ser. No. 301,668
Int. Cl.³ A61K *31/40;* C07D *487/14*
U.S. Cl. 424—274 4 Claims

1. A compound of the formula:

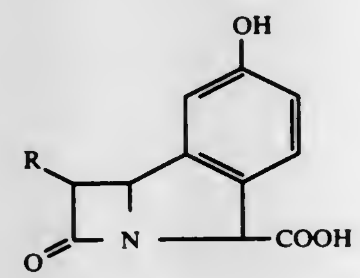

and the pharmaceutically acceptable salts and esters thereof, wherein R is NHR¹, R¹ is hydrogen, or acyl.

3. An antibiotic method of treatment comprising administering a therapeutically effective amount of a compound according to claim 1.

4,374,850
METHOD OF CONTROLLING PARASITIC TICKS

LaWanda M. Hunt, Kerrville, Tex.; Malcolm J. Thompson, Baltimore, and William E. Robbins, Silver Spring, both of Md., assignors to The United States of America as represented by the Secretary of Agriculture, Washington, D.C.
Division of Ser. No. 134,008, Mar. 26, 1980, Pat. No. 4,310,547. This application Dec. 3, 1981, Ser. No. 326,996
Int. Cl.³ A01N *33/02, 43/36*
U.S. Cl. 424—274 2 Claims

1. A method of controlling parasitic ticks which attack animals comprising administering to said animal in need of treatment a systemically effective amount against said ticks of a compound of the formula

$CH_3(CH_2)_y$—A

wherein y is an integer from 8 to 12 and A is

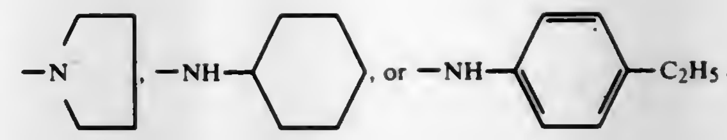

4,374,851
METHOD OF CONTROLLING PARASITIC TICKS

LaWanda M. Hunt, Kerrville, Tex.; Malcolm J. Thompson, Baltimore, and William E. Robbins, Silver Spring, both of Md., assignors to The United States of America as represented by the Secretary of Agriculture, Washington, D.C.
Division of Ser. No. 134,008, Mar. 26, 1980, Pat. No. 4,310,547. This application Dec. 3, 1981, Ser. No. 326,995
Int. Cl.³ A01N *43/08*
U.S. Cl. 424—285 2 Claims

1. A method of controlling parasitic ticks which attack animals comprising administering to said animal in need of treatment a systemically effective amount against said ticks of a compound of the formula

$CH_3(CH_2)_yNH$-A

wherein y is an integer from 9 to 13 and A is

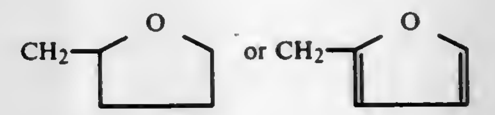

4,374,852
ANTI-FUNGAL COMPOSITIONS EMPLOYING METAL SALTS OF CARBOXYLIC ACIDS

Edward A. Hilditch, Frome; Robert E. Hambling, Warminster; Colin R. Sparks, and David A. Walker, both of Frome, all of England, assignors to Cuprinol Limited, Somerset, England
Continuation of Ser. No. 36,271, May 4, 1979, abandoned. This application Oct. 30, 1980, Ser. No. 202,216
Claims priority, application United Kingdom, May 5, 1978, 18026/78
Int. Cl.³ A01N *55/02*
U.S. Cl. 424—289 2 Claims

1. A fungicidal composition comprising a mixture of:
(a) a zinc salt of isononanoic acid and
(b) a zinc salt of a mixture of tertiary saturated acyclic carboxylic acids which acids have the formula

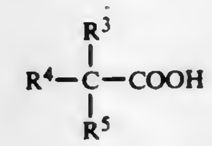

wherein
R³, R⁴ and R⁵ represent an alkyl group which together contain about 8 carbon atoms, the weight ratio of zinc salt of isononanoic to zinc salt of a said mixture of tertiary saturated acyclic carboxylic acids being 75:25 to 25:75.

4,374,853
METHOD FOR CONTROLLING ECTOPARASITES

Lester J. Workman, P.O. Box 5547, Sarasota, Fla. 33579
Filed Mar. 31, 1981, Ser. No. 249,696
Int. Cl.³ A01N *41/02;* A61K *31/255, 31/14*
U.S. Cl. 424—303 9 Claims

1. A method of killing ectoparasites on warm blooded animals comprising: (1) applying to said animal an insecticidally effective amount of a composition consisting essentially of an

aqueous alcohol solution containing at least one compatible, insecticidally effective surface active wetting agent incorporated therein, (2) allowing the thus applied composition to remain in contact with the animal's skin and fur for a period of time sufficient to kill the parasites contained therein, and thereafter (3) removing the composition and killed parasites.

4,374,854

FUNGICIDAL SULFUR-CONTAINING PHENYL ESTERS AND MIXTURES THEREOF

Bruce M. Resnick, West Paterson, N.J., assignor to GAF Corporation, New York, N.Y.

Filed Apr. 3, 1981, Ser. No. 250,809

Int. Cl.³ A61N *37/02, 37/06, 41/02*

U.S. Cl. 424—311 **10 Claims**

1. The method of inhibiting growth of fungi which comprises exposing said fungi to a growth inhibiting quantity of a compound having the formula

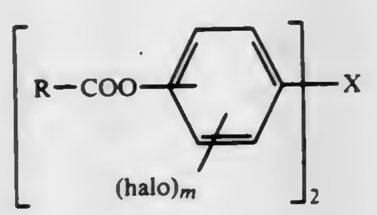

wherein X is —S—, —SS—, —SO—, —SO_2— or —SO_3— m has a value of from 0 to 2; halo is fluorine, chlorine or bromine and R is a radical having not more than 4 carbon atoms selected from the group consisting of alkenyl, haloalkenyl and haloalkyl; and mixtures of said compounds.

4,374,855

FUNGICIDAL NAPHTHYLENE DIESTERS AND MIXTURES THEREOF

Bruce M. Resnick, West Paterson, N.J., assignor to GAF Corporation, New York, N.Y.

Filed Apr. 3, 1981, Ser. No. 250,824

Int. Cl.³ A01N *37/02, 37/06*

U.S. Cl. 424—313 **8 Claims**

1. The method of inhibiting growth of plant pathogenic fungi which comprises exposing said fungi to a growth inhibiting quantity of a compound having the formula

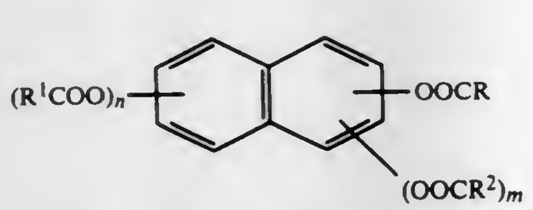

wherein R, R¹ and R² are each independently a radical having not more than 4 carbon atoms selected from the group consisting of alkenyl, haloalkenyl and haloalkyl; either m or n has a value of 1 and the remaining subscript is zero and mixtures of said compounds.

4,374,856

LIVER CYTOPROTECTION USING PGE'S

Mary J. Ruwart, Kalamazoo, Mich., assignor to The Upjohn Company, Kalamazoo, Mich.

Filed Sep. 10, 1980, Ser. No. 185,837

Int. Cl.³ A61K *31/19, 31/215*

U.S. Cl. 424—317 **7 Claims**

1. A method for the treatment or prevention of a hepatic disease characterized by glutamic pyruvic transaminase (SGPT) activity of greater than 50 international units in a mammal suffering from or particularly susceptible to the development of said disease which comprises:

systemically or orally administering to said mammal an amount of a hepatocytoprotective PGE-type prostaglandin effective to treat or prevent said disease.

4,374,857

METHOD OF INHIBITING L-TRYPTOPHAN TO SERUM ALBUMIN BINDING

Jen C. Hsia, Concord, Canada, assignor to Her Majesty the Queen in right of Canada, as represented by the Minister of National Defence, Ottawa, Canada

Filed Jan. 25, 1982, Ser. No. 342,236

Int. Cl.³ A61K *31/19*

U.S. Cl. 424—317 **11 Claims**

1. A method of inhibiting L-tryptophan to serum albumin binding in blood or a blood fraction fluid containing L-tryptophan and serum albumin, comprising adding to the fluid cis-parinaric acid in a molar ratio to serum albumin of about 0.5:1 to 4.0:1.

4,374,858

ASPARTAME SWEETENED CHEWING GUM OF IMPROVED SWEETNESS STABILITY

Michael Glass, Flushing, and Theresa Cea, Brooklyn, both of N.Y., assignors to Warner-Lambert Company, Morris Plains, N.J.

Continuation-in-part of Ser. No. 81,995, Oct. 4, 1979, abandoned. This application Mar. 3, 1981, Ser. No. 239,937

Int. Cl.³ A23G *3/30;* **A23L** *1/22*

U.S. Cl. 426—5 **6 Claims**

1. A method for improving the sweetness stability of an aspartame sweetened chewing gum composition which comprises applying onto the surface of the chewing gun piece a dusting of a material comprising aspartame.

4,374,859

METHOD FOR REDUCING FUSEL OIL IN ALCOHOLIC BEVERAGES AND YEAST STRAIN USEFUL IN THAT METHOD

Ralph E. Kunkee; S. Richard Snow, both of Davis, and Craig Rous, Lodi, all of Calif., assignors to The Regents of The University of California, Berkeley, Calif.

Filed Jul. 7, 1980, Ser. No. 166,546

Int. Cl.³ C12G *3/12;* **C12P** *7/06;* **C12N** *15/00, 1/18*

U.S. Cl. 426—14 **10 Claims**

1. A method for producing ethanolic fermentation products of low fusel oil content, comprising:

fermenting a nutrient medium having a fermentable carbohydrate substrate with a diploid mutant of a Saccharomyces or a Torulaspora species, which has a reduced ability to produce fusel oil during the fermenting, said fusel oil being selected from a group consisting of n-propyl, isobutyl, optically active amyl, and isoamyl alcohols, said microorganism having the ability to produce a fermentation product having an ethanol content of at least 8%.

8. A biologically pure culture of a diploid microorganism of the genus Saccharomyces or Torulspora characterized by having capabilities comprising:

fermenting, under optimal conditions, a carbohydrate substrate to a fermentation product having at least 8% by volume of ethanol and having a weight ratio of isoamyl alcohol to ethanol of no more than about 1×10^{-3}.

4,374,860

PROCESS FOR THE PRODUCTION OF A READILY WATER MISCIBLE POWDER FORM AMYLACEOUS FOOD PRODUCT

Rupert J. Gasser, and Ernest Badertscher, both of Orbe, Switzerland, assignors to Societe D'Assistance Technique Pour Produits Nestle S.A., Lausanne, Switzerland

Filed Dec. 3, 1980, Ser. No. 212,531

Claims priority, application Switzerland, Dec. 19, 1979, 11246/79

Int. Cl.³ A23L *1/10*

U.S. Cl. 426—28 **14 Claims**

1. A process for the production of a readily water-miscible powder-form amylaceous food product which comprises preparing a first mixture of amylaceous material and water, cooking the mixture to cause gelatinization of the amylaceous material and liquefying it by enzymatic hydrolysis, preparing a second mixture having a dry matter content of from 35% to 45% by weight of additional amylaceous material, water and at least 40% by weight of the first liquefied mixture, cooking the mixture to cause gelatinization of the additional amylaceous material, liquefying it by enzymatic hydrolysis and spray drying at least part thereof.

4,374,861

LACTOSE-REDUCED ICE CREAM AND PROCESS FOR THE PRODUCTION THEREOF

Jan Trzecieski, Naerum, Denmark, assignor to Kirk Chemicals A/S, Troeroed, Denmark

Filed May 6, 1981, Ser. No. 261,005

Claims priority, application Denmark, May 22, 1980, 2234/80

Int. Cl.³ A23G *9/00;* **A23C** *9/12*

U.S. Cl. 426—42 **5 Claims**

1. A process for the production of ice cream and milk ice cream which per 100 parts by weight of the ice cream comprises mixing 4-10 parts of lactose and 4-10 parts of milk solids non-fat, with lactase, sugars, stabilizer, emulsifier and water, then holding the resulting mixture under conditions suited to enzymatic hydrolysis of lactose until at least about 50% of the lactose in the mixture has been hydrolyzed, thereafter adding 3-12.5 parts of edible fat, the lactase, sugars, stabilizer, emulsifier and water being the balance by weight of said hundred parts, then pasteurizing followed by homogenizing and subsequently freezing and thereafter hardening.

4,374,862

Patent Not Issued For This Number

4,374,863

COMPOSITIONS AND METHODS FOR PROVIDING NONADHERENT DOUGH FOR BAKED GOODS

Frances H. Savage, Lawrenceburg, Ind., assignor to The Procter & Gamble Co., Cincinnati, Ohio

Filed Mar. 2, 1981, Ser. No. 239,766

Int. Cl.³ A21D *13/00*

U.S. Cl. 426—553 **42 Claims**

1. A nonadherent cookie dough composition, comprising: (a) sugar; (b) flour; (c) shortening; (d) 15-60%, by weight of the shortening, of water; and (e) sufficient emulsifier active at dough mixing temperatures to render the dough system shortening-continuous.

4,374,864

SOLUBLE COFFEE PROCESS

Willi Hufnagel, Ludwigsburg, Fed. Rep. of Germany; Maurice Blanc, Morges, and Walter Balimann, Orbe, both of Switzerland, assignors to Societe D'Assistance Technique pour Produits Nestle S.A., Lausanne, Switzerland

Filed Apr. 8, 1981, Ser. No. 252,200

Int. Cl.³ A23F *5/26, 5/44*

U.S. Cl. 426—594 **8 Claims**

1. A process for forming a vegetable extract, in the absence of a stripping step prior to extraction, in a system comprising a series of cells containing coffee and coffee substitute, by contacting progressively fresher vegetable material countercurrently with an extraction liquid which enters an inlet cell so that the temperature of the inlet cell is in the range of from about 140° C. to 190° C. and is withdrawn in batches from an outlet cell such that the temperature of the outlet cell is in the range of from about 80° C. to 107° C. wherein during or after each draw-off the pair of cells containing the most exhausted vegetable material is disconnected from the system for discharge and reloading and after each draw-off a pair of cells with fresh loads of coffee and coffee substitute is added to the system so that the outlet cell is the second in series and contains the majority of coffee of the pair and wherein the pair of cells containing fresh loads of coffee and coffee substitute contains from about 40 to 80% by weight of coffee and the outlet cell and each succeeding alternate cell contains the majority of coffee of the pair with 70% to 95% by weight of the total coffee present in the pair of cells.

4,374,865

ORANGE JUICE CONCENTRATE

Rudolf G. Strobel, Cincinnati, Ohio, assignor to The Procter & Gamble Company, Cincinnati, Ohio

Continuation-in-part of Ser. No. 171,057, Jul. 22, 1980, abandoned. This application Jul. 13, 1981, Ser. No. 282,830

Int. Cl.³ A23L *2/14, 2/12*

U.S. Cl. 426—599 **22 Claims**

1. A natural orange juice concentrate prepared from orange juice, said concentrate comprising:

(1) at least 35% total solids, originally present in the juice, comprising pulp, nonvolatile compounds, and volatile compounds, the balance being water;

(2) two of said volatile compounds being ethyl butyrate and limonene;

(3) at least 0.1% of said volatile compounds being ethyl butyrate;

(4) the proportion of said ethyl butyrate to said limonene being in the range of about 0.0015:1 to about 0.6:1;

(5) said volatile compounds comprising a low boiling fraction and a high boiling fraction, the ratio of the low boiling fraction to the high boiling fraction being at least about 4:1;

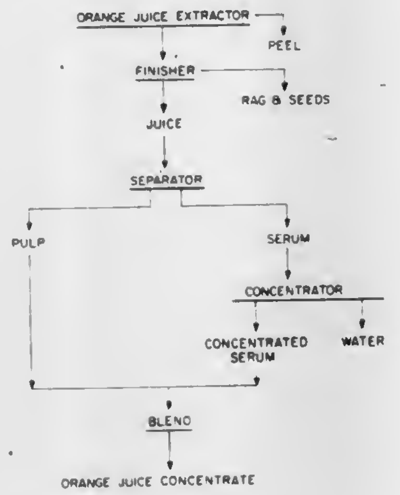

the amounts and proportions of said volatile compounds are determined by a gas chromatographic analysis of the head-space volatile compounds released from a sample of orange juice, said sample having a temperature of 40° C.

4,374,866
METHOD OF MANUFACTURING CORRECTION FILTER FOR EXPOSING SCREENS OF COLOR-PICTURE TUBES

Nadezda Blahna, Lichtenwald, and Bruno Fischer, Esslingen, both of Fed. Rep. of Germany, assignors to International Standard Electric Corporation, New York, N.Y.
Filed Jul. 15, 1981, Ser. No. 283,327
Claims priority, application Fed. Rep. of Germany, Jul. 22, 1980, 3027704
Int. Cl.³ B05D *1/02;* **B05B** *12/06*
U.S. Cl. 427—10 **13 Claims**

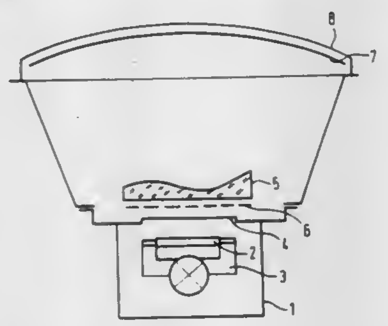

1. A method of manufacturing a correction filter of the type that has a light-absorbing transmission pattern for generating, during the photochemical manufacture of the screen of a color-picture tube, a predetermined exposure intensity distribution over an area, said transmission pattern being formed by the step of:

applying to a transparent support a distribution of predominantly opaque spots formed by solidified droplets having a concentration profile chosen in accordance with the predetermined intensity distribution and achieved by using stencils.

4,374,867
METHOD OF GROWING OXIDE LAYER ON INDIUM GALLIUM ARSENIDE

Robert E. Nahory, Lincroft, and Benjamin Tell, Aberdeen, both of N.J., assignors to Bell Telephone Laboratories, Incorporated, Murray Hill, N.J.
Filed Nov. 6, 1981, Ser. No. 318,803
Int. Cl.³ B05D *3/14, 5/12, 7/24*
U.S. Cl. 427—38 **6 Claims**

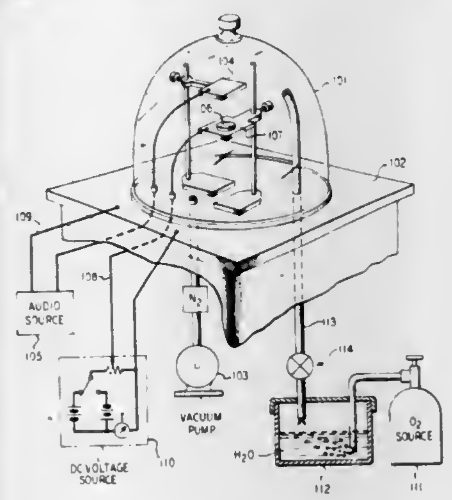

1. In a process for growing an oxide on an epitaxial layer consisting primarily of indium, gallium and arsenic by exposing the layer to a plasma of oxygen, the step of exposing the layer to water vapor during the growth of the oxide.

4,374,868
METHOD FOR PRODUCING PRINTED CIRCUIT BOARDS WITH PUNCHED HOLES HAVING METALLIZED WALLS

Fritz Stahl, Tonisvorst, and Horst Steffen, Geldern-Pont, both of Fed. Rep. of Germany, assignors to Kollmorgen Technologies Corporation, Dallas, Tex.
Filed Mar. 2, 1981, Ser. No. 239,385
Claims priority, application Fed. Rep. of Germany, Mar. 4, 1980, 3008143
Int. Cl.³ H05K *3/18, 3/42*
U.S. Cl. 427—97 **4 Claims**

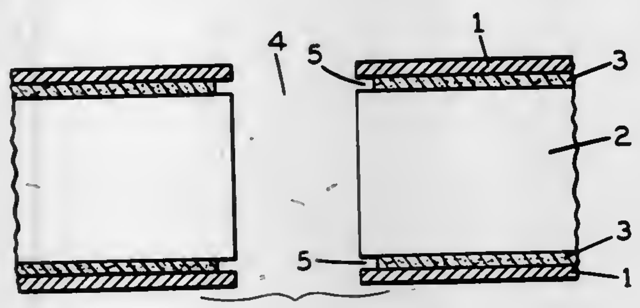

1. A method for producing printed circuit boards with holes having metallized walls, in the course of which method metallic coating of the hole walls and the circuit pattern are produced by means of currentless metal precipitation alone or in combination with subsequent galvanic metal deposition, and in which method the initial material is a substrate suitable for the manufacture of printed circuit boards, with the surface of said substrate being provided with an adhesive coating temporarily masked by a metal or plastic foil and forming a base material, characterized by the steps of providing the base material with holes having walls to be metallized; subsequently subjecting the base material with the holes to an etching solution suitable for removing the adhesive coating exposed on the holes without substantially attacking the masking foil; continuing the treatment with said etching solution until there is removed not

only any burr or bead of the adhesive coating formed in the production of the holes but, to a limited extent, also the adhesive coating itself around the hole, starting from the edges of the holes and proceeding from the edges beneath the masking foil and forming a recess in the adhesive around the holes and beneath the masking foil; removing the masking foil from the etching solution treated base material; and, treating said treated base material with said masking foil removed with an electroless metal deposition solution to deposit on said base material surface around said holes from which said adhesive coating has been removed and on the walls of said holes a metal deposit.

4,374,869
SELECTIVE METAL ETCH TECHNIQUE

John K. Dorey II, Ewing Township, Mercer County, N.J., and James T. Huneke, Lower Makefield Township, Bucks County, Pa., assignors to Western Electric Company, Inc., New York, N.Y.
Filed Jan. 18, 1982, Ser. No. 339,949
Int. Cl.³ H05K *3/40*
U.S. Cl. 427—97 **9 Claims**

1. A method of selectively etching a pattern in a substrate by magnetically holding a magnetic, etch resistant mask over the substrate and applying an etchant material over the mask and substrate, and prior to etching, applying a sealant between the mask and substrate which sealant is at least partially soluble in the etchant and is capable of preventing etchant from seeping under the mask when the mask is magnetically held in place.

4,374,870
METHOD OF IMPREGNATING A CABLE

Kurt K. Sandgren, Grödinge, and Hans V. L. Selving, Skärholmen, both of Sweden, assignors to Telefonaktiebolaget L M Ericsson, Stockholm, Sweden
Continuation of Ser. No. 812,567, Jul. 5, 1977, abandoned, which is a continuation of Ser. No. 674,612, Apr. 7, 1976, abandoned, which is a continuation of Ser. No. 496,032, Apr. 9, 1974, abandoned. This application Feb. 22, 1979, Ser. No. 13,979
Claims priority, application Sweden, Sep. 14, 1973, 73125643
Int. Cl.³ B05D *5/12*
U.S. Cl. 427—120 **7 Claims**

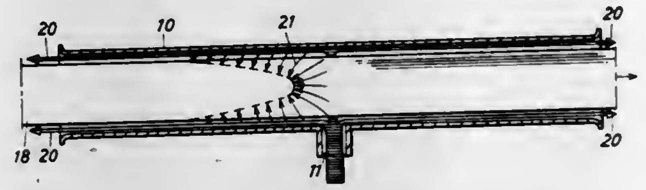

1. A method of impregnating a cable with water impenetrable and water repellant sealing material, the cable comprising a plurality of conductors having a band thereon which permits inward passage of said sealing material under pressure in flowable form said method comprising passing the cable axially through a pipe having open ends, the pipe and cable forming an annular gap along the length of the pipe which gap is between 1 and 3 mm in thickness and is relatively thin compared to the diameter of the cable, said gap being formed uniformly along the length of the pipe, said gap extending to the open ends of the pipe, heating the sealing material to a temperature to render the same flowable, injecting the heated sealing material under pressure into said pipe at an intermediate position between the open ends thereof to cause part of said sealing material to flow inwardly into said cable while the remainder of the sealing material travels axially along the cable in said gap in opposite directions and freely flows axially outwards from the gap at the ends of the pipe, said sealing material undergoing cooling in the cable to form a barrier against penetration of water.

4,374,871
PROCEDURE AND DEVICE FOR OILING THE INSIDE OF TUBULAR CASINGS

Fritz K. Steinbis, Gross-Gerau, Fed. Rep. of Germany, assignor to Gunter Kollross, Fed. Rep. of Germany
Filed Jun. 1, 1981, Ser. No. 268,549
Claims priority, application Fed. Rep. of Germany, May 31, 1980, 3020764
Int. Cl.³ B05B *3/14;* **B05D** *7/22, 1/02, 5/08*
U.S. Cl. 427—236 **8 Claims**

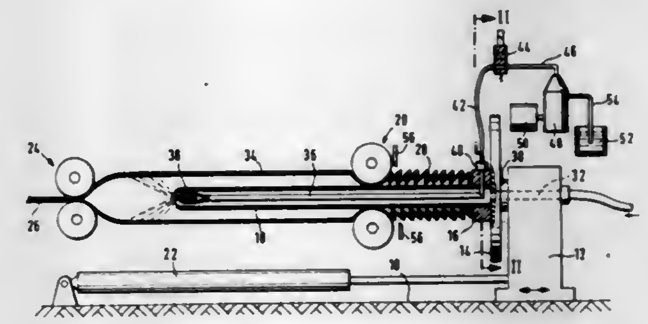

1. A method of shirring and lubricating a tubular cellulose casing utilizing at least two hollow shirring mandrels mounted to a turret device, said method comprising the steps of:

1. Simultaneously inserting and moving one of said mandrels from a third predetermined position into said tubular casing and into a shirring tool to a predetermined second position;
2. inflating said tubular casing being held on said one of said shirring mandrels between a sealed joint and said shirring tool;
3. simultaneously ejecting a lubricating oil mist from said one of said mandrels onto the inside of said tubular casing as one of said mandrels is advanced to a predetermined first position adjacent said sealed joint;
4. activating said shirring tool and continuously applying a shirring force while sequentially moving said one of said mandrels from said predetermined first position toward said predetermined second position; such that a shirred strand is built up on said one of said mandrels;
5. retracting said one of said mandrels from said shirring tool to said predetermined position;
6. severing said shirred strand formed on the mandrel from the tubular casing;
7. activate said turret device to rotate said turret device such that the other of said at least two mandrels is rotated in alignment with said shirring tool and said tubular casing; and

repeat steps 1 through 7.

6. An apparatus for shirring tubular cellulose casings, said apparatus comprising:

a base member;
a pedestal member mounted to said base member;
a rotatable turret disc member mounted to said pedestal member for rotatable movement relative to said pedestal member from a first predetermined position to a second predetermined position;
at least two hollow mandrels mounted to said turret disc member in spaced relationship and for movement with said turret disc member;
means for ejecting a lubricating fluid from said at least two hollow mandrels, said ejecting means being mounted in spaced relationship to said hollow mandrels and communicating with said hollow mandrels;
passage means for delivering a gaseous fluid to said at least two hollow mandrels, said passage means being mounted in said pedestal and turret disc member;
means for shirring said tubular casing mounted to said base member in spaced relationship to one of said two hollow mandrels when said turret disc member is at said first predetermined position; and
means for linearly moving said pedestal member relative to

said shirring means such that said one of said two hollow mandrels is sequentially moved from a third predetermined position to a first predetermined position communicating with said shirring means to move said one of said mandrels into said tubular casing to said first predetermined position, said ejecting means lubricating said tubular casing as said one of said mandrels moves from said third predetermined position to said first predetermined position, said pedestal moving means further moving said one of said mandrels from said first predetermined position to a second predetermined position within said shirring means whereby said shirring means communicates with said tubular casing and said one of said mandrels to build up a shirred strand of lubricated tubular casing on said one of said mandrels, said shirring means terminating communication with said tubular casing when said one of said mandrels reaches said second predetermined position; said moving means further moving said one of said mandrels with said shirred strand of tubular casing from said second predetermined position to said third predetermined position;

means for severing said tubular casing on said one of said mandrels when said pedestal moving has moved said one of said mandrel to said third predetermined position;

means for rotatably moving said turret disc member from a first predetermined position to a second predetermined position, said first predetermined position aligning said one of said two hollow mandrels with said shirring means, said second predetermined position aligning the other of said two hollow mandrels with said shirring means; and

means for mounting said shirring means to said base member in spaced relationship to said at least two hollow mandrels.

4,374,872
CASEIN COATINGS FOR LEATHER INSOLUBILIZED WITH ALKOXY ALKYL UREAS

Guenter Eckert, Limburgerhof; Lothar Wuertele, Ludwigshafen; Harro Petersen, Frankenthal; Ulrich Goeckel, and Kurt Fischer, both of Ludwigshafen, all of Fed. Rep. of Germany, assignors to BASF Aktiengesellschaft, Ludwigshafen, Fed. Rep. of Germany

Filed Jul. 8, 1981, Ser. No. 281,489

Claims priority, application Fed. Rep. of Germany, Jul. 16, 1980, 3026863

Int. Cl.³ B05D *3/04*

U.S. Cl. 427—338 **6 Claims**

1. A process for finishing leather and improving the wet abrasion resistance thereof comprising:

(A) applying a coating to said leather with an aqueous coating composition consisting essentially of a mixture of casein and an alkoxy alkyl urea,

(B) thereafter drying said coating and applying an acid catalyst thereto, and thereafter

(C) drying, pressing, and curing said coating at ambient temperature to about 160° C.

4,374,873
PROCESS AND INSTALLATION FOR COATING A METALLIC STRIP CONTINUOUSLY WITH A COVERING LAYER

Albert Piedboeuf, Chaudfontaine; Victor Polard, Awans, and Andre Cornez, Liege, all of Belgium, assignors to Phenix Works Societe Anonyme, Flemalle, Belgium

Filed Nov. 4, 1980, Ser. No. 204,083

Claims priority, application Luxembourg, Nov. 7, 1979, 81865

Int. Cl.³ C23C *17/00;* **B05C** *1/08*

U.S. Cl. 427—349 **6 Claims**

1. A process for coating a metallic strip continuously with a coating layer, in which the strip is displaced in a non-oxidizing gaseous atmosphere above and at a small distance from the surface of the coating bath and in contact with a rotatable coating device, rotating said coating device at a predetermined speed in a direction such that its top moves in a direction opposite to the direction of travel of the strip to apply in one step a thick layer of coating material, adjusting the thickness of

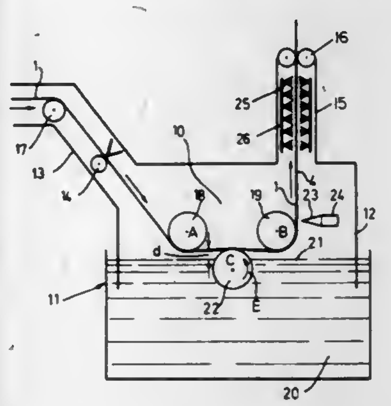

the coating layer carried along by the strip downstream of the coating device by applying a jet of a non-oxidizing gas to the strip over the entire width of the strip, and deflecting the strip upwardly about said rotatable coating device.

4,374,874
CORROSION-RESISTANT COATING COMPOSITION CONTAINING HOLLOW MICROBALLOONS

John Blitstein, Chicago, and Donald Kathrein, Northbrook, both of Ill., assignors to T. C. Manufacturing Company, Inc., Evanston, Ill.

Division of Ser. No. 176,470, Aug. 8, 1980, Pat. No. 4,307,142. This application Jun. 8, 1981, Ser. No. 271,437

Int. Cl.³ B05D *3/02;* **C08J** *9/22;* **B32B** *27/00*

U.S. Cl. 427—379 **7 Claims**

1. A method of protecting a substrate from degradation caused by chemical or thermal attack comprising:

coating said substrate with a layer of a fluoroelastomer composition comprising a fluoroelastomer dissolved in a solvent and a plurality of hollow microspheres dispersed in said dissolved fluorelastomer, said microspheres having a particle size in the range of about 2 to about 300 microns, said microspheres encapsulated in said fluoroelastomer composition in an amount of about 3 to about 50 percent by volume of fluoroelastomer plus microspheres;

drying said layer of fluoroelastomer composition to form a first coating layer; and

curing said first layer of fluoroelastomer composition.

4,374,875
WATER-BORNE THERMOPLASTIC POLYHYDROXYETHER COMPOSITIONS

You-Ling Fan, East Brunswick, N.J., assignor to Union Carbide Corporation, Danbury, Conn.

Division of Ser. No. 216,639, Dec. 15, 1980, Pat. No. 4,355,122. This application Dec. 23, 1981, Ser. No. 333,893

Int. Cl.³ B05D *3/02*

U.S. Cl. 427—386 **4 Claims**

1. Method of protecting metallic substrates which comprises depositing a colloidal dispersion of a thermoplastic polyhydroxyether on said substrates followed by baking at elevated temperatures until a clear, continuous, tough film adheres to said substrates, said colloidal dispersion being prepared by:

(1) grafting onto normally solid thermoplastic polyhydroxyether one or more ethylenically unsaturated hydrocarbon monomers having 3 to about 8 carbons at least one of said monomers containing sufficient carboxyl, —COOH, groups to provide from about 1 carboxyl group per 10 monomeric units of thermoplastic polyhydroxyether to about 10 carboxy groups per each monomeric unit of polyhydroxyether; and

(2) blending said grafted thermoplastic polyhydroxyether in a high turbulence field with:

(a) water,

(b) a water-miscible base, and

(c) a water-miscible organic solvent in which said thermoplastic polyhydroxyether is soluble until an ionomer of the grafted thermoplastic polyhydroxyether is obtained as colloidal dispersion, said thermoplastic polyhydroxyether having the general formula:

$$—D—O—E—O—_n$$

wherein D is the radical residuum of a dihydric phenol, E is an hydroxyl containing radical residuum of an epoxide and n represents the degree of polymerization and is at least 30.

4,374,876
PROCESS FOR THE IMMERSION DEPOSITION OF GOLD

Mohamed F. El-Shazly, Bloomfield; Kenneth D. Baker, Bridgewater, and Yvonne Rymwid, West Paterson, all of N.J., assignors to Occidental Chemical Corporation, Warren, Mich.

Filed Jun. 2, 1981, Ser. No. 269,445

Int. Cl.³ C23C *3/02*

U.S. Cl. 427—443.1 **8 Claims**

1. A process for electroless plating gold on a substrate which comprises immersing such substrate in an electroless gold plating bath which comprises a trivalent gold complex selected from alkali metal auricyanides and alkali metal auric imides in an amount which is at least sufficient to deposit gold on the substrate up to the maximum solubility of the complex in the bath, and at least one of the following ingredients:

(a) an organic carboxylic acid, and

(b) a mineral acid in amounts sufficient to adjust the pH of the bath to from about 0.1 to 6.0 and maintaining such substrate immersed in said bath, without the passage of electrical current therethrough, for a period of time sufficient to form an immersion deposit of gold on said substrate.

4,374,877
AUTOMATICALLY EXPANDING POP-UP DECORATION

Bernard M. Cole, 7 Park Drive East, Old Westbury, N.Y. 11568

Filed Jul. 20, 1981, Ser. No. 285,033

Int. Cl.³ G09F *1/00*

U.S. Cl. 428—9 **9 Claims**

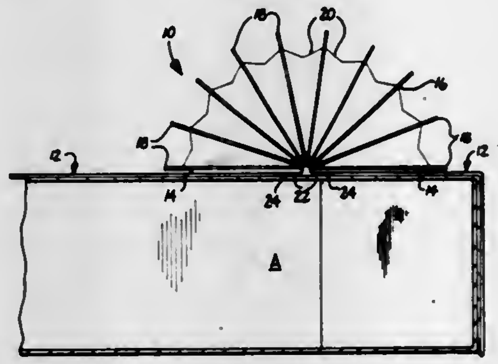

1. An automatically expanding pop-up decoration for use in gift-wrapping a package comprising:

(A) an ornament having a pair of opposed end members and an expansible structure pivotally joining said end members together, said end members being capable of pivoting between a substantially face-to-face relationship and a substantially edge-to-edge relationship, said ornament being substantially flat when said end members are in a substantially face-to-face relationship and having a substantially upstanding portion when said end members are in a substantially edge-to-edge relationship; and,

(B) an elasticized cord having the opposite ends thereof secured to said ornament end members, respectively, whereby application of said cord about a package so as to tension said cord ends automatically causes said ornament end members to pivot into the substantially edge-to-edge relationship.

4,374,878
BLANK ADAPTED TO BE BLOWN INTO A CONTAINER AND PROVIDING ORIENTATION OF THE MATERIAL IN THE MOUTH AND NECK AS WELL AS THE BODY

Kjell M. Jakobsen, Skanör, and Claes T. Nilsson, Loddeköpinge, both of Sweden, assignors to PLM Aktiebolag, Malmo, Sweden

Filed May 30, 1980, Ser. No. 154,887

Claims priority, application Sweden, Jun. 11, 1979, 7905045

Int. Cl.³ B29B *3/00*

U.S. Cl. 428—35 **8 Claims**

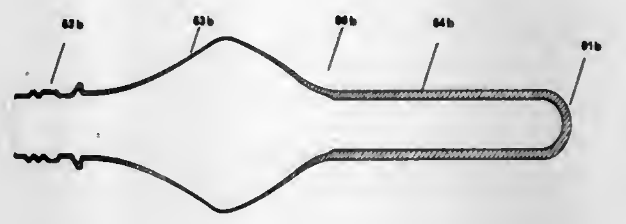

1. A tubular pre-moulding of a thermoplastic of polyester or polyamide type, the pre-molding having substantially uniform initial thickness and comprising a mouth part with adjacent neck sections at one end, a closure at the other end and a tubular section between the two ends, the closed end and the tubular section of the pre-moulding consisting mainly of amorphous unoriented material having a crystallinity of less than 5%, the improvement wherein the mouth part of the pre-moulding, with adjacent neck sections, consists of material which is oriented substantially by a reduction in the thickness of the material while the remainder of the pre-moulding retains its original thickness and, at least in the mouth part, said material has a lower degree of orientation in the circumferential direction of the pre-moulding as compared to the axial direction, the crystallinity of the material in the mouth part being at most 50%, the orientation of the mouth part and adjacent neck sections of the pre-moulding by the thickness reduction providing an increased glass transition temperature Tg in said mouth part and neck sections which is substantially equal to the glass transition temperature of said tubular section when the amorphous material of the tubular section is oriented by a subsequent blowing of the pre-moulding to a container.

4,374,879
GLASS BOTTLE COATING COMPOSITION MADE FROM A SALT OF A POLYAMINE TERMINATED POLYEPOXIDE ADDUCT, AN EPOXY CROSSLINKER, A REACTIVE SILANE, A SURFACTANT AND A NATURAL OR SYNTHETIC WAX

Donald R. Roberts, Crestwood, Ky.; Gina R. Kritchevsky, both of Scotch Plains, and Martin J. Hannon, Madison, both of N.J., assignors to Celanese Corporation, New York, N.Y.

Filed Feb. 2, 1981, Ser. No. 230,976

Int. Cl.³ C08L *63/00;* **B65D** *1/02*

U.S. Cl. 428—35 **8 Claims**

1. A multi composition which when the components are mixed forms a thermosetting curable composition capable of rendering glass surfaces scratch resistant, blush resistant and lubricious when applied as a coating on said glass surfaces which comprises:

(A) as a first component, the solution of:

(1) an acid salt of a polyamine terminated polyepoxide adduct which is the reaction product of

(a) a polyepoxide resin represented by the structural formula:

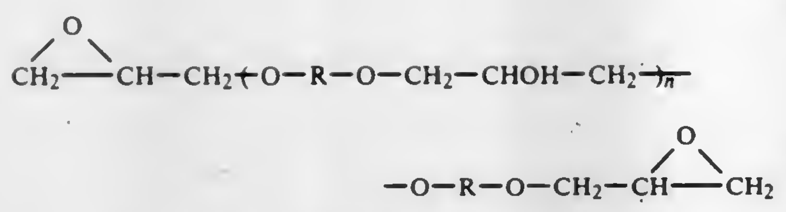

wherein R is a divalent hydrocarbon radical of a dihydric phenol and the average value of n is from about 2 to about 35 and

(b) a polyamine having at least two amine nitrogen atoms per molecule, at least three reactive amine hydrogen atoms per molecule and no other groups reactive with epoxide groups,

wherein about 1 mol of (b) is reacted with each epoxide equivalent of (a), said adduct having an active amine hydrogen equivalent weight of about 140 to about 1700 and an amine nitrogen equivalent weight of about 140 to about 2600;

(2) at least one organic aliphatic hydroxyl containing co-solvent having a solubility parameter polar component between about 2.6 and about 3.9 $(cal/cm^3)^{\frac{1}{2}}$ present in an amount of from about 5 to about 45% by weight based on the weight of the polyepoxide-amine adduct and co-solvent; and

(3) water in an amount sufficient to bring the solids content of the mixture to below 40% by weight, based on the weight of adduct, co-solvent and water;

(B) as a second component the mixture of:

(1) at least one polyepoxide crosslinker which is the glycidyl polyether of a polyhydric phenol having an epoxide equivalent weight of from about 150 to about 1000;

(2) at least one silane represented by the structural formula:

$$R_2\text{—}CH_2)_xSi\text{—}\overline{O}R_1)_3$$

wherein R_1 is an alkyl group of from about 1 to about 4 carbons; R_2 is an organo functional radical selected from the group consisting of amino, glycidyl, epoxy cycloaliphatic wherein the cycloaliphatic group contains from about 5 to about 7 carbons, mercapto, ureido, amino alkylimino wherein the alkyl group contains from about 1 to about 6 carbons; and x is an integer of from about 2 to about 5;

(3) at least one surface active agent selected from the group consisting of anionic, non-ionic and cationic characterized by their compatibility with the mixed components of the system; and

(4) optionally at least one co-solvent of the type employed in the first component in an amount of from about 0 to about 90%, by weight, based on the weight of co-solvent and crosslinker; and

(C) as a third component an aqueous emulsion of at least one system compatible natural or synthetic wax emulsified in water with at least one system compatible surfactant of the type employed in the second component, said surfactant and water being present in the third component in at least an amount sufficient to emulsify said wax; and

wherein the amounts of said polyepoxide crosslinker, and silane, present in the second component, the amount of said wax present in the third component, and the combined amount of surface active agent present in the second and third components are such that when the three components of the system are mixed the solids content of said mixture thereof contains (i) the polyepoxide crosslinker in an amount sufficient to achieve an epoxy crosslinker to reactive adduct amine hydrogen equivalent weight ratio of from about 0.25:1.0 to about 1.5:1.0; (ii) the silane in an amount of from about 0.5 to about 10%, by weight, based on the weight of said solids content; (iii) the wax in an amount of from about 1 to about 50%, by weight, based on the weight of said solids content; and (iii) the surface active agent in an amount of from about 1 to about 10%, by weight, based on the weight of said solids content.

4,374,880

SEALING STRIP

Francois Mesnel, Neuilly-sur-Seine, France, assignor to Etablissements Mesnel, Carrieres-sur-Sein, France

Filed Oct. 24, 1980, Ser. No. 200,149

Claims priority, application France, Nov. 13, 1979, 79 27876

Int. Cl.³ E06B *7/16*

U.S. Cl. 428—36 **1 Claim**

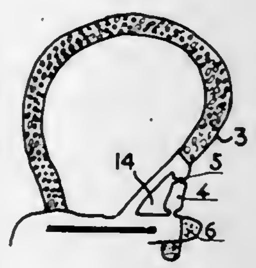

1. A sealing strip for use with a part of a vehicle, such as a door, the strip comprising:

(a) an elongated mounting portion having an exterior and having a profile shaped as a "U" in a cross section taken transverse to the length of said mounting portion, the "U" of the profile having an open side for engagement with part of the vehicle, a closed side opposite said open side, and two legs extending from said closed side toward said open side, each leg having a free end adjacent said open side;

(b) an essentially tubular, elongated, resilient sealing portion joined with said elongated mounting portion, said mounting and sealing portions both running lengthwise along substantially the same path, said sealing portion being secured to and along one of said legs of said mounting portion, said sealing portion having an exterior, said sealing portion also having a first part which terminates in a first longitudinal edge secured to said one leg at a position adjacent to said closed side and a second part which terminates in a second longitudinal edge secured to said one leg at a position remote from said closed side and yet spaced from said free end of said one leg;

(c) said sealing and mounting portions having at least one curved segment for cooperation with a curved portion of the vehicle and at least one relatively straight segment for cooperation with a relatively straight portion of the vehicle;

(d) an elongated lateral connection bracing at the exteriors of said mounting and sealing portions and extending laterally from a part of said mounting portion adjacent the free end of said one leg to the second part of said sealing portion, said bracing being located on the same side of said mounting portion as said open side of said "U" which defines said cross-sectional profile thereof; said bracing extending lengthwise partially along the lengths of said mounting and sealing portions; said bracing being located along at least said curved segment of said sealing and mounting portions, said bracing, when taken in a direction along the entire length of said sealing and mounting portions, having at least one gap therein with respect to the entire length of said sealing and mounting portions, said gap being located in said relatively straight segment of said sealing and mounting portions;

(e) said bracing comprising a connection arm running longitudinally and extending between said one leg and said tubular sealing portion, said arm including, as a portion thereof, a lateral strip running longitudinally and having spaced weakened longitudinally running sides for breaking segments of said lateral strip away from said arm to effect lengthwise discontinuities in said bracing; and

(f) whereby, in practice, undue deformation of said sealing portion in said curved segments is prevented.

4,374,881

HEAT RECOVERABLE CONNECTOR

Stephen R. Hamilton, Ravenna, Ohio, assignor to Eaton Corporation, Cleveland, Ohio

Filed Mar. 24, 1981, Ser. No. 247,027

Int. Cl.³ B32B *1/08;* **H02G** *3/04*

U.S. Cl. 428—36 **6 Claims**

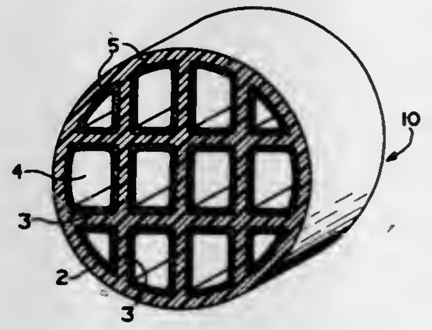

1. An elongate open-ended connector made from a heat recoverable material having an elastic memory and able to be shrunken by heat from an expanded state to a contracted state to provide an individual protective covering about a plurality of joined articles, said connector in the expanded state comprising, an outer surrounding wall extending along the length of the connector between one end thereof and an opposite end thereof and at least one internal wall extending for at least a portion of the distance along the length of the connector within said outer wall and integrally related therewith that partitions the connector within the outer wall into a plurality of open-ended channels extending between said ends of the connector, said channels having a cross-sectional shape adapted to receive and permit the positioning of the joined articles therewithin, said internal wall having a length thereof sufficient to encapsulate the area of juncture between the respective articles positioned within each of the channels, and said internal wall and said outer wall adapted to contract snugly about the joined articles and thicken without melting to control drift of the joined article towards each other and provide an individual and combined protective covering thereabout of reduced bulk that assures adequate spacing between the joined articles when the connector is contracted by heat.

4,374,882

COMPOSITIONS COMPRISING LOW PRESSURE ETHYLENE POLYMERS AND ALKYLENE-ALKYL ACRYLATE COPOLYMERS; AND SPIRAL WOUND HOSE PRODUCTS FABRICATED THEREFROM

George M. Harlan, Somerville, N.J., assignor to Union Carbide Corporation, Danbury, Conn.

Filed Dec. 18, 1981, Ser. No. 332,276

Int. Cl.³ C08L *23/08, 23/00*

U.S. Cl. 428—36 **8 Claims**

1. A composition comprising a subsequently linear ethylene polymer having a melt index of about 0.1 to about 10.0 and a density of about 0.915 to about 0.935 and in an amount of about 20 to about 90 percent by weight, an alkylene-alkyl acrylate copolymer having a combined alkyl acrylate content of at least about 19 percent by weight and having a melt index of about 0.5 to about 6.0.

4,374,883

PRESSURE-SENSITIVE ADHESIVE TAPE

Louis E. Winslow, Stillwater, Minn., assignor to Minnesota Mining and Manufacturing Company, St. Paul, Minn.

Filed Oct. 15, 1981, Ser. No. 311,553

Int. Cl.³ B32B *7/02, 27/40;* **D21H** *1/04*

U.S. Cl. 428—40 **7 Claims**

1. Normally tacky and pressure-sensitive adhesive tape having good holding power, resistance to aging and comparatively low cost comprising a sheet backing bearing a composite adhesive stratum comprising a layer of rubbery, compliant polyurethane, and, bonded over the polyurethane layer so as to constitute the outermost surface, a layer of soft, normally tacky and pressure-sensitive adhesive which is immiscible with the polyurethane, the thickness of the polyurethane layer being at least about twice the thickness of the pressure-sensitive adhesive layer, the polyurethane having a 10-second shear-creep compliance of at least 5×10^{-6} cm^2/dyne, a 7–10 minute shear rate viscosity of at least 10^6 Pa.s, a 7–10 minute delayed elastic compliance component greater than 50%, and an equilibrium elastic compliance greater than 90%, and the pressure-sensitive adhesive having a 10-second shear creep compliance component of at least 1.5×10^{-6} cm^2/dyne, a 7–10 minute shear rate viscosity of at least 3×10^6 Pa.s, and a 7–10 minute delayed elastic compliance component greater than 50%, said tape exhibiting superior adhesive properties to those attainable with tape in which the backing is coated with either the polyurethane alone or the pressure-sensitive adhesive alone.

2. The tape of claim 1 wherein the thickness of the polyurethane layer is at least four times the thickness of each pressure-sensitive adhesive layer.

5. The tape of claim 1 or 2 wherein (a) the sheet backing is a release liner and (b) a layer of soft, normally tacky and pressure-sensitive adhesive is interposed between the liner and the polyurethane layer, thereby providing a relatively inexpensive adhesive transfer tape having excellent holding power and shear properties.

4,374,884

PILE CARPET HAVING A WATER ACTIVATABLE ADHESIVE

John C. Kwok, and Ivan S. Lee, both of Sarnia, Canada, assignors to Polysar Limited, Sarnia, Canada

Filed Dec. 9, 1980, Ser. No. 214,765

Int. Cl.³ B32B *3/02*

U.S. Cl. 428—95 **6 Claims**

1. A tufted carpet having tufts secured in a primary backing, and attached thereto a secondary backing comprising a foam rubber, said secondary backing being uniformly coated on its exposed surface with a dry non-tackey adhesive layer in an amount from about 3.4 to 102 grams by dry weight per square meter; said adhesive being water activatable and having a wet initial tack and adhesive strength less than the delamination strength of the secondary backing, and a dry adhesive strength greater than the delamination strength of the secondary backing, said adhesive layer comprising from about 50 to 99.5 parts by dry weight of a latex of a polymer having a film forming temperature below about 25° C. selected from the group consisting of natural rubber, C_4-C_6 conjugated diolefin containg polymers, acrylic polymers, mixtures thereof and mixtures of vinyl acetate polymers with C_4-C_6 conjugated diolefin containing polymers, and from about 50 to 0.5 parts by dry weight of thickening agent selected from the group consisting of alkali soluble/swellable aqueous emulsion polymers, salts of polyacrylic acid, water soluble starch, water soluble cellulose derivatives, alkali sensitive latexes, and mixtures thereof.

4,374,885
CUSHION MATERIALS AND METHOD OF MAKING SAME
Hisashi Ikeda, Yokohama, and Yuuichi Hosoda, Hamakita, both of Japan, assignors to Ikeda Bussan Co., Ltd., Kanagawa, Japan
Filed Jan. 19, 1981, Ser. No. 226,315
Claims priority, application Japan, Jan. 23, 1980, 55-7248; Feb. 23, 1980, 55-22619[U]; Oct. 1, 1980, 55-137443; Dec. 12, 1980, 55-175497
Int. Cl.³ B32B *3/26*
U.S. Cl. 428—160 **24 Claims**

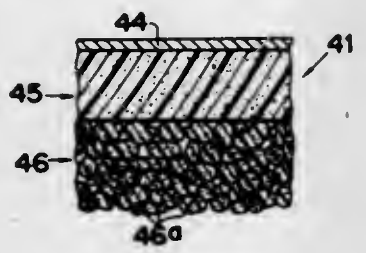

1. A cushion material, comprising:
a plurality of cushion layers formed with a plurality of polyurethane foam slabs in piles cut in a predetermined form, form keeping layer means made of bonding agent applied between said plurality of polyurethane foam slabs with its amount partially increased or decreased at a predetermined portion between said polyurethane foam slabs to be solidified in a predetermined cubic form pressure, maintaining said cushion layers in a predetermined cubic form, the surface having a feel of soft polyurethane foam.

12. A cushion material as set forth in claim 1, said polyurethane foam slab being composed of a pair of polyurethane foam slabs profiled at the one side thereof, said profiled faces of said polyurethane foam slabs in pair being applied with a bonding agent, bonded together opposite to each other and compressed together at the same time, thus said bonding agent being solidified to constitute a form keeping layer.

4,374,886
COLOR REGISTERED DECORATIVE LAMINATES
Ram S. Raghava, Ann Arbor, Mich., assignor to Formica Corporation, Cincinnati, Ohio
Continuation-in-part of Ser. No. 46,141, Jun. 6, 1979, abandoned. This application Oct. 30, 1980, Ser. No. 202,108
The portion of the term of this patent subsequent to Mar. 30, 1999, has been disclaimed.
Int. Cl.³ B32B *3/30, 31/20*
U.S. Cl. 428—172 **9 Claims**

1. A heat and pressure laminate assembly consisting essentially of, in superimposed relationship,
(a) a core layer comprised of a self-supporting substrate;
(b) a resin impregnated print layer consisting of an opaque alpha cellulose paper sheet;
(c) a pigmented surface coating of a hydrolyzed polyvinyl alcohol having a degree of hydrolysis equal to or greater than about 99.0 percent of the acetate groups modified melamine-formaldehyde resin wherein the surface coating weight is from about 0.5 to about 20.0 grams per square foot, the amount of fully hydrolyzed polyvinyl alcohol in the surface coating is from about 5 to about 30 percent by weight of the total weight of the melamine-formaldehyde reaction product solids and said pigmented surface coating has a flow sufficient to cause said pigmented surface coating to flow more than said resin impregnating the print layer; and
(d) an embossing press plate having a surface with protuberant and valley areas capable of being impressed into the uppermost surface of said print layer and means for preventing the embossing press plate from sticking to the coated print sheet during lamination.

8. A method for producing a heat-and-pressure consolidated laminate which comprises consolidating the assembly of claim 1 under heat and pressure to thereby effect a lamination of said fibrous sheets together, an embossment of the uppermost of the print sheet and a migration of the pigmented resin from the areas of said embossment corresponding to the protuberant areas of the embossed press plates to the valley areas thereof and thereafter removing said embossing press plate from the resultant laminate so as to produce a dense laminate having embossed areas of contrasting color.

4,374,887
SIGN MAKING APPARATUS
Gregory R. Waldron, West Oneonta, N.Y., assignor to Scott Machine Development Corporation, Walton, N.Y.
Division of Ser. No. 905,748, May 15, 1978, abandoned. This application Apr. 27, 1981, Ser. No. 257,658
Int. Cl.³ B32B *3/00, 7/06*
U.S. Cl. 428—195 **2 Claims**

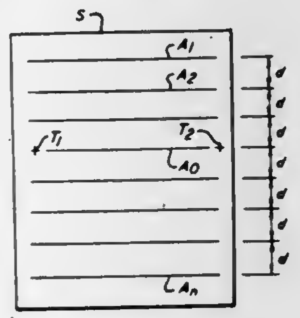

1. A coordinated plurality of carrier sheets which will assist an operator to make various signs using characters of a plurality of different nominal sizes, having different numbers of rows of characters and different vertical spacings between said rows, with use of a single sheet-positioning apparatus operable to position a sheet in incremental steps of distance d, each of said sheets carrying a plurality of transferable characters each having a baseline, the baselines of the characters of each respective nominal size on any sheet of said plurality of sheets being vertically spaced at integral multiples of said distance d, each of said sheets carrying means defining a reference line across the sheet, each lower-case character of any given nominal size on any of said sheets having its apparent vertical centerline located a vertical distance from the reference line on its associated sheet so that if successive ones of said sheets are installed in said machine with their respective reference lines similarly registered to the machine, the apparent vertical centerlines of the lower-case characters of all nominal sizes lie either on a common line or at an integral multiple of said distance d therefrom.

4,374,888
NONWOVEN LAMINATE FOR RECREATION FABRIC
Stephan R. Bornslaeger, Outagamie County, Wis., assignor to Kimberly-Clark Corporation, Neenah, Wis.
Filed Sep. 25, 1981, Ser. No. 305,575
Int. Cl.³ B32B *27/14*
U.S. Cl. 428—198 **8 Claims**

1. A pattern bonded nonwoven fabric having a basis weight in the range of from about 2.5 to 10 oz/yd² with permeability, water repellency and flame retardant properties comprising,
a multi-layer structure of thermoplastic polymer nonwoven fabrics including continuous filament outer layers having a basis weight of about 0.5 to 5 oz/yd² each, and a microfibrous intermediate layer having a basis weight of about 0.5 to 2.0 oz/yd²,
wherein the melting points of the thermoplastic polymers used for each layer are similar and wherein the properties of the fabric result from forming or treating the component layers prior to combination including imparting ultraviolet light radiation resistance to one outer layer and flame retardancy to the other outer layer.

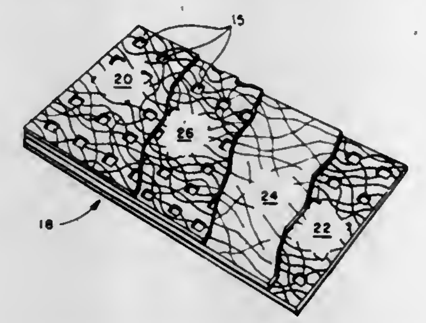

4,374,889
OIL-REPELLENT MICROVOID-IMAGING MATERIAL
Robert P. Arens, St. Paul, Minn., assignor to Minnesota Mining and Manufacturing Company, St. Paul, Minn.
Filed Dec. 7, 1981, Ser. No. 327,768
Int. Cl.³ B41M *5/00;* **G01D** *15/34*
U.S. Cl. 428—207 **9 Claims**

1. A self-supporting sheet material which is adapted to being provided with markings by the application of a colorless liquid of predetermined volatility, comprising in combination:
a. a self-supporting dark-colored base sheet having a face side and a back side and
b. bonded over each side of said base sheet, a diffusely reflective opaque white to pastel microvoid-containing layer comprising an organic polymer having a refractive index in the range of about 1.3 to 2.2,
c. present at least at the exposed surface of the layer on only the face side of the base sheet, an oleophobic fluorochemical which prevents the microvoids at the face side from being readily penetrated by oil and grease, so that the microvoids at the face side of sheet material can be penetrated and transparentized only by polar liquids or liquids having a low surface tension, such penetration effecting local transparentization of the face side layer to expose the dark-colored base, whereas the microvoids at the back side of the sheet material are readily penetrated by both polar and non-polar liquids having either low surface tension or high surface tension,
whereby potentially transparentizing contamination of the layer on the face side of said sheet material, caused by contact with oil and the like, can be removed by promptly placing the face side layer in contact with the back side layer of another portion of the sheet material, the contaminating liquid being absorbed into the back side layer of the sheet material.

4,374,890
ADHESIVE-SHEET FOR THE REINFORCEMENT OF METAL PLATES AND METHOD OF REINFORCING METAL PLATES
Masato Shimizu; Eishi Asoshina; Takashi Tominaga, and Tadahiro Muguruma, all of Ibaraki, Japan, assignors to Nitto Electric Industrial Co., Ltd., Osaka, Japan
Filed Nov. 25, 1981, Ser. No. 324,939
Claims priority, application Japan, Nov. 27, 1980, 55-167428
Int. Cl.³ B32B *7/02;* **B05D** *3/02;* **B32B** *27/38;* **C09J** *7/02*
U.S. Cl. 428—212 **15 Claims**

1. An adhesive-sheet for the reinforcement of metal plate, comprising a first epoxy resin composition layer and a second epoxy resin composition layer laminated thereon wherein the first epoxy resin composition layer is prepared so that when provided on the metal plate and cured by heating, it has a modulus of elasticity in tension sufficient to increase the stiffness of the metal plate, and the second epoxy resin composition layer is prepared so that when provided on and adhered to the metal plate and cured by heating, it has a modulus of elasticity in tension insufficient to increase the stiffness of the metal plate.

4,374,891
ULTRATHIN POLYMER MEMBRANES
William J. Ward, III, Schenectady, N.Y., assignor to General Electric Company, Schenectady, N.Y.
Division of Ser. No. 536,650, Dec. 26, 1974, Pat. No. 4,279,855, which is a continuation-in-part of Ser. No. 356,514, May 2, 1973. This application Mar. 2, 1981, Ser. No. 239,755
Int. Cl.³ B32B *7/02*
U.S. Cl. 428—220 **2 Claims**

1. A film consisting of a blend of polyphenylene oxide and organopolysiloxane-polycarbonate copolymer exhibiting an oxygen/nitrogen separating factor having a value of at least 4.0, said film containing from about 10 to about 35% by weight of the total blend of organopolysiloxane-polycarbonate copolymer and having a thickness of less than about 200 Å.

4,374,892
MOISTURE RESISTANT INSULATING MICA TAPE COMPRISING A MONOALKOXY TITANATE
Jonathan W. Roberts, Raymond, N.H., assignor to Essex Group, Inc., Fort Wayne, Ind.
Filed Jun. 3, 1981, Ser. No. 270,174
Int. Cl.³ B32B *5/24, 19/04, 19/06, 27/32*
U.S. Cl. 428—233 **7 Claims**

1. An electrical insulation tape comprising a sheet of mica paper impregnated with a B-staged polybutadiene polymer, a woven glass scrim next to the mica paper, a block copolymer sealing layer next to the glass scrim, and a polyethyleneterephthalate sealing layer next to the mica, wherein the improvement comprises:
including about 0.1% to about 0.35% by weight based on the weight of mica present of a monoalkoxy titanate in the mica sheet to improve moisture resistance and dissipation factor.

4,374,893
TEXTILES WITH IMPROVED CONDUCTING PROPERTIES AND PROCESSES FOR THEIR MANUFACTURE
Andre Arsac, Vernaison; Michel Ducarre, Sainte-Foy-les-Lyon; Jean Grosbois, L'Isle Adam, and Thomas Nener, Charville, all of France, assignors to Rhone-Poulenc-Textile, Paris, France
Filed Jun. 26, 1981, Ser. No. 277,607
Claims priority, application France, Jun. 26, 1980, 80 14286
Int. Cl.³ D04B *1/00;* **B05D** *5/12*
U.S. Cl. 428—263 **13 Claims**

1. Textiles, preferably yarns and fibers, based on synthetic polymers, with permanent conducting properties, characterised in that they possess, on the surface, a uniform continuous layer consisting of at least 3% of copper sulphide, the composition of which is such that the atomic ratio (Cu/S) is between 1.5 and 2, and of which the ratio (R/R_o) is between 1 and 10, R being the electrical resistance after treatment for 400 hours at 60° C. and a humidity of 70%, and R_o being the initial resistance of the treated textile.

4,374,894
POLYOLEFIN NONWOVENS WITH HIGH WET STRENGTH RETENTION BONDED WITH VINYL CHLORIDE COPOLYMERS
George J. Antlfinger, Avon Lake, Ohio, assignor to The B F Goodrich Company, Akron, Ohio
Filed Nov. 3, 1980, Ser. No. 202,994
Int. Cl.³ B32B *27/30, 27/32;* **D04H** *1/64, 1/72*
U.S. Cl. 428—288 **5 Claims**

1. A nonwoven fabric having improved wet tensile strength retention comprising polyolefin nonwoven fibers bonded together with a binder selected from the group consisting of

latexes containing polyvinyl chloride wherein vinyl chloride is copolymerized with one or more of copolymerizable monomers selected from the group consisting of vinylidene chloride, α,β-olefinically unsaturated carboxylic acids containing 3 to 5 carbon atoms; monounsaturated dicarboxylic acids containing 4 to 8 carbon atoms; esters of α,β-olefinically unsaturated monocarboxylic and dicarboxylic acids containing 4 to 20 carbon atoms; acrylamides and methacrylamides and their N-alkylol derivatives containing 3 to 20 carbon atoms selected from the group consisting of hydroxyalkyl diacetone acrylamides and methacrylamides, hydroxyalkyl acrylamides and methacrylamides, N-alkylol acrylamides and methacrylamides, and mixtures thereof; vinyl ethers containing 4 to 22 carbon atoms; vinyl ketones containing 3 to 12 carbon atoms; vinyl esters of carboxylic acids containing 4 to 22 carbon atoms; alpha olefins containing 2 to 12 carbon atoms; styrene and styrene derivatives; and mixtures thereof.

4. A method for making nonwoven fabric with improved wet tensile strength retention comprising contacting polyolefin fibers with a binder to adhere said fibers together, said binder is selected from the group consisting of latexes containing polyvinyl chloride wherein vinyl chloride is copolymerized with one or more of copolymerizable monomers selected from the group consisting of vinylidene chloride; α,β-olefinically unsaturated carboxylic acids containing 3 to 5 carbon atoms; monounsaturated dicarboxylic acids containing 4 to 8 carbon atoms; esters of α,β-olefinically unsaturated monocarboxylic and dicarboxylic acids containing 4 to 20 carbon atoms; α,β-olefinically unsaturated nitriles containing 3 to 5 carbon atoms; acrylamides and methacrylamides derived from acrylic and methacrylic acids and their N-alkylol derivatives containing 3 to 20 carbon atoms selected from the group consisting of hydroxyalkyl diacetone acrylamides and methacrylamides, hydroxyalkyl acrylamides and methacrylamides, N-alkylol acrylamides and methacrylamides, and mixtures thereof; vinyl ethers containing 4 to 22 carbon atoms; vinyl esters of carboxylic acids containing 4 to 22 carbon atoms; alpha olefins containing 2 to 12 carbon atoms; styrene and styrene derivatives; and mixtures thereof.

4,374,895
ELECTROSTATIC RECORDING ELEMENT
Tokuro Yasuda, and Keiji Yamauchi, both of Yonago, Japan, assignors to Oji Paper Co., Ltd., Tokyo, Japan
Continuation-in-part of Ser. No. 69,556, Aug. 24, 1979, abandoned. This application Jun. 25, 1981, Ser. No. 277,210
Claims priority, application Japan, Aug. 31, 1978, 53-106397; Aug. 31, 1978, 53-106398; Feb. 13, 1979, 54-15346; Feb. 26, 1979, 54-20712; Feb. 27, 1979, 54-21368
Int. Cl.^{3} B32B *5/16;* **G01D** *15/34*
U.S. Cl. 428—328 **15 Claims**

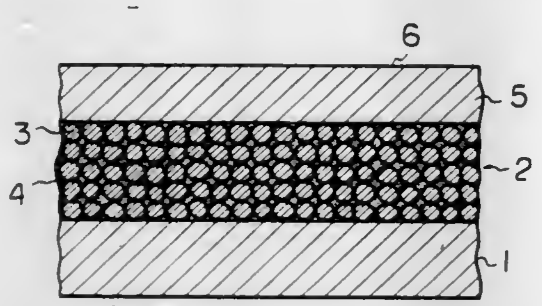

1. An electrostatic recording element comprising
(a) a substrate comprising paper or a synthetic polymer film;
(b) a conductive layer located on a surface of said substrate and comprising (1) powdered electroconductive zinc oxide which has been doped with a member selected from the group consisting of aluminum, copper and tin, and which has a specific resistivity of from 1×10^{-1} to 1×10^{2} ohm-cm, under a pressure of 150 kg/cm^2, (2) an organic fluorescent brightening agent in an amount of from 0.1 to 2.0% based on the weight of said electroconductive zinc oxide, and (3) a binding material uniformly mixed with said electroconductive zinc oxide and said organic fluorescent brightening agent; and
(c) a dielectric layer located on said conductive layer and having an electrostatic recording surface.

4,374,896
COATINGS FOR POLYOLEFINIC PRODUCTS AND PRODUCTS COVERED BY SAID COATINGS
Donato Jacobone, Via Borgonuovo, 18 Milan, Italy
Filed Dec. 28, 1978, Ser. No. 973,804
Claims priority, application Italy, Jan. 10, 1978, 19109 A/78
Int. Cl.^{3} B32B *27/00;* **C09J** *7/02*
U.S. Cl. 428—349 **4 Claims**

1. A thermosealable coating composition for isotactic polypropylene film products which consists essentially of a solution of a three-component polymeric system as follows:
(a) a first component selected from the group consisting of vinyl copolymer (PVC/PVA) in a relative monomer weight percent ratio between about 70/30% and 90/10%;
(b) a second component selected from the group consisting of polymers and copolymers of acrylic esters and mixtures thereof; and
(c) a third component consisting of a polyester resin obtained by condensation and being present in a weight percent ratio of from about 1–50% of the polymeric system.

4. As new industrial products, thermosealable polypropylene films coated with a composition consisting essentially of a solution of a dry polymeric system comprising:
(a) a first component consisting of a vinyl copolymer (PVC/PVA) in a relative monomer ratio between about 70/30% and 90/10%;
(b) a second component selected from the group consisting of polymers and copolymers of acrylic esters and mixtures thereof; and
(c) a third component consisting of a polyester resin obtained by condensation and being present in a ratio of from about 1–50% of the polymeric system.

4,374,897
CHROMIUM OXIDE-BASED SINTERED BODIES AND PROCESS FOR PRODUCTION THEREOF
Akira Yamaguchi, Kasugai, Japan, assignor to Nippon Chemical Industrial Co., Ltd., Tokyo, Japan
Filed Mar. 4, 1981, Ser. No. 240,436
Claims priority, application Japan, Mar. 4, 1980, 55/26863; Apr. 12, 1980, 55/28375; May 10, 1980, 55/62090
Int. Cl.^{3} B32B *9/04;* **C04B** *35/56, 35/48, 35/12*
U.S. Cl. 428—446 **7 Claims**

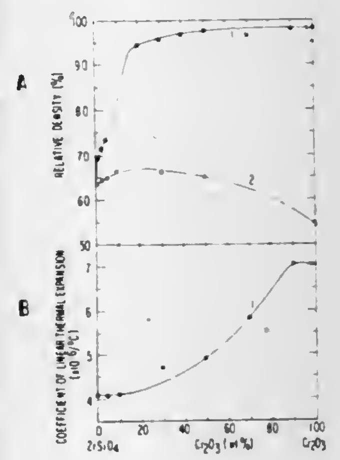

1. A highly densified chromium oxide-based sintered body having a relative density of at least 90% and a linear thermal expansion coefficient of from 2.5×10^{-6}/°C. to 7.2×10^{-6}/°C. produced by heating a compact consisting of chromium oxide and at least one substance selected from silica (SiO_2), zirconia (ZrO_2), and zircon ($ZrSiO_4$) in a carbon reduction atmosphere wherein the surface of the compact is converted to a carbide during the heating period.

4,374,898
ELASTOMERIC FILM
Tibor G. Mahr, Wilmington, Del., assignor to E. I. Du Pont de Nemours and Company, Wilmington, Del.
Filed Jun. 25, 1981, Ser. No. 278,435
Int. Cl.^{3} B05D *3/06;* **B32B** *9/04, 13/12*
U.S. Cl. 428—447 **4 Claims**

1. A process for treating ethylene/vinyl acetate copolymer film containing about 35 to 50 percent copolymerized vinyl acetate by weight, said ethylene/vinyl acetate being cross-linked as a result of being subjected to a 0.5 to 16 megarad dosage of high energy radiation, comprising:
(a) contacting the film with an alcoholic solution, at 20°–80° C., containing at least 0.2 percent of a coupling agent selected from the group consisting of titanate and silane coupling agents so that the coupling agent is bonded to the surface of the film; and then
(b) contacting the film of (a) with an alcoholic slurry containing at least 0.2 percent finely divided mineral particulates so that the mineral particles are bonded to the coupling agent.

3. The product of the process of claim 1.

4,374,899
HARDBOARD TREATING COMPOSITION AND PROCESS FOR FORMING HARDBOARD SURFACES
Salvatore G. Sanfilippo, and James T. White, both of Tuscaloosa, Ala., assignors to Reichhold Chemicals, Incorporated, White Plains, N.Y.
Division of Ser. No. 151,172, May 19, 1980, Pat. No. 4,336,174. This application May 6, 1982, Ser. No. 375,495
Int. Cl.^{3} B32B *27/10, 23/08*
U.S. Cl. 428—514 **7 Claims**

1. An improved hardboard sheet formed from compressed lignocellulose fiber having outer wet surfaces treated with a storage-stable aqueous polymeric compositon that is cured during fiber compaction by a forming press that maintains the sheets under heat and pressure, said aqueous composition being (A) a homogeneous three-component system containing, on a dry solids basis, a miscible mixture of from about 40 to about 60 percent by weight of a water-soluble melamine-formaldehyde copolymer, from about 15 to about 30 percent by weight of a styrene-acrylic copolymer emulsion, and from about 18 to about 30 percent by weight of a water-soluble methylated melamine formaldehyde copolymer; (B) from about 25 to about 32 percent by weight of a compound capable of adjusting the pH of the composition; and (C) from about 3 to about 7 percent by weight of a cross-linking acid catalyst, based upon the total weight of the solids, said composition having a dry resin solids range of from about 30 to 40 parts by weight.

4,374,900
COMPOSITE DIAMOND COMPACT FOR A WIRE DRAWING DIE AND A PROCESS FOR THE PRODUCTION OF THE SAME
Akio Hara, and Shuji Yazu, both of Itami, Japan, assignors to Sumitomo Electric Industry, Ltd., Osaka, Japan
Filed Jun. 29, 1979, Ser. No. 53,204
Claims priority, application Japan, Jul. 4, 1978, 53/80476; Jan. 16, 1979, 54/2245
The portion of the term of this patent subsequent to Oct. 6, 1998, has been disclaimed.
Int. Cl.^{3} B22F *7/06, 7/08;* **C22C** *29/00*
U.S. Cl. 428—551 **29 Claims**

1. A diamond compact in cylindrical form for a wire drawing die, in which a part or all of the circumference of a diamond sintered body is surrounded by a cermet consisting of a hard compound of (Mo, W)C type carbide crystals containing molybdenum as a predominant component, bonded by an iron group metal, and wherein the binder phase of the diamond

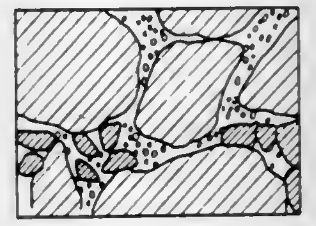

sintered body contains an iron group metal and fine carbide crystals containing molybdenum as a predominant component.

4,374,901
VERY FINE DIAMETER UNIFORM WIRES
Carl M. Ferrar, Hartford, Conn., assignor to United Technologies Corporation, Hartford, Conn.
Filed Dec. 21, 1981, Ser. No. 333,197
Int. Cl.^{3} C23C *11/02*
U.S. Cl. 428—607 **9 Claims**

1. A metal wire having a diameter of less than about 6×10^{-6} m comprised of a drawn metal core having a cross sectional area variation of more than ±3% surrounded by a layer of vapor deposited material of essentially the same composition as the core, the wire having an overall cross sectional area variation of less than ±3%, both cross sectional area variations measured over lengths of about 10 mm.

4,374,902
NICKEL-ZINC ALLOY COATED STEEL SHEET
John R. Smith, Richmond, Ohio; William D. Bingle, Rochester, Pa., and Lowell W. Austin, Weirton, W. Va., assignors to National Steel Corporation, Pittsburgh, Pa.
Filed Feb. 11, 1981, Ser. No. 233,569
Int. Cl.^{3} B32B *15/18*
U.S. Cl. 428—621 **6 Claims**

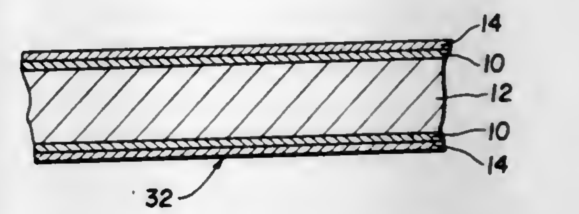

1. A nickel-zinc alloy plated steel sheet for use for forming can bodies and comprising,
a flat rolled steel sheet base metal having a thickness gauge suitable for forming into cans and having a substantially uniform nickel-zinc alloy electroplated coating on each side thereof, said nickel-zinc coating on each side having a thickness within the range of about 0.5 to about 5.0 microinches and the amount of zinc in the coating being within the range of about 2 to about 12 percent by weight, and
a dichromate or chromic acid coating applied to the nickel-zinc alloy coated surfaces.

4,374,903

METAL COATINGS OR METAL SANDWICHES WITH BORON NITRIDE OR TITANIUM DIBORIDE SUBSTRATES

Josef Intrater, Englewood Cliffs, N.J., and Gene Bertoldo, New York, N.Y., assignors to Advanced Technology, Inc., Palisades Park, N.J.

Continuation-in-part of Ser. No. 242,716, Mar. 11, 1981, which is a continuation-in-part of Ser. No. 200,514, Oct. 24, 1980, which is a continuation-in-part of Ser. No. 157,310, Jun. 9, 1980, abandoned. This application May 28, 1981, Ser. No. 268,015

The portion of the term of this patent subsequent to Nov. 9, 1999, has been disclaimed.

Int. Cl.[3] C23C *9/10*

U.S. Cl. 428—627 **10 Claims**

1. A composite of tin, lead, indium, a tin alloy, a lead alloy or an indium alloy as component in a combination with a carbide or carbonyl former, as an adherent coating, film or layer on a base or substrate of boron nitride or titanium diboride, or mixtures thereof.

4,374,904

TIN-BASE BODY SOLDER

Douglas J. Harvey, Sterling Heights, Mich., assignor to General Motors Corporation, Detroit, Mich.

Division of Ser. No. 160,135, Jun. 16, 1980, which is a division of Ser. No. 113,559, Jan. 21, 1980, Pat. No. 4,248,905. This application Apr. 14, 1982, Ser. No. 368,429

Int. Cl.[3] C22C *13/00*

U.S. Cl. 428—648 **4 Claims**

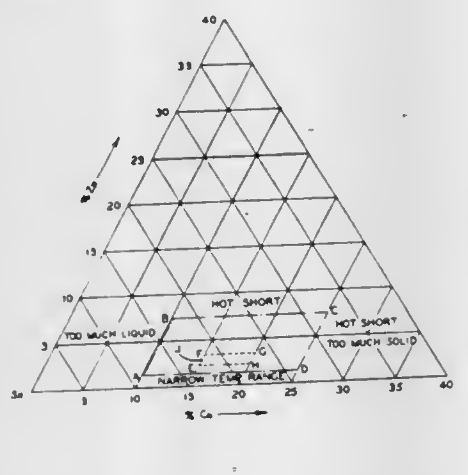

1. A metallic body solder incorporated in a steel surface to fill a depression therein and comprising an alloy consisting essentially of, by weight, between about 10 to 25 percent copper, about 1 to 7.5 percent zinc and the balance tin, said solder forming a dense, paintable surface adherent to said steel body.

4,374,905

X-RAY INTENSIFYING SCREEN

Jacob G. Rabatin, Chardon, Ohio, assignor to General Electric Company, Schenectady, N.Y.

Continuation-in-part of Ser. No. 749,996, Dec. 13, 1976, abandoned. This application Oct. 16, 1978, Ser. No. 951,464

Int. Cl.[3] C09K *11/475*

U.S. Cl. 428—691 **1 Claim**

1. An improved x-ray screen including a backing member coated with a physical admixture of a rare earth oxyhalide phosphor selected from lanthanum oxyhalide and gadolinium oxyhalide activated by T_x wherein T_x is chosen from Tm and Tb and an inorganic salt selected from $MgSO_4$ and $ZnSO_4$ added in sufficient quantity from a small but effective amount up to 4 weight percent based on the phosphor weight to retain original emission brightness for a longer time period than for said phosphor without said inorganic salt, said admixture further being adhesively bonded with a polymer binder to said backing member, and said improved x-ray screen resisting loss in film speed and brightness when associated with photographic film.

4,374,906

RIBBED ELECTRODE SUBSTRATES

Richard D. Breault, Coventry, Conn., and Glen J. Goller, West Springfield, Mass., assignors to United Technologies Corporation, Hartford, Conn.

Filed Sep. 29, 1981, Ser. No. 306,835

Int. Cl.[3] H01M *4/86, 4/96*

U.S. Cl. 429—44 **21 Claims**

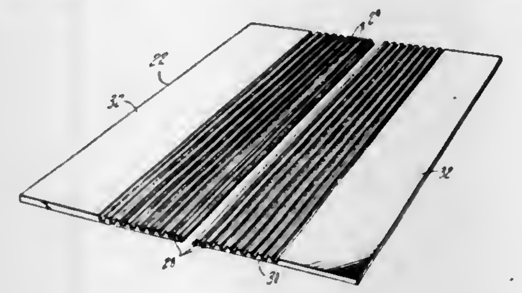

1. An electrochemical cell electrode substrate, said substrate comprising, by weight, 65%-90% carbon fibers and 10%-35% polymeric carbon, said substrate including a flat sheet portion having parallel ribs extending outwardly from and being integral with one side thereof forming parallel channels extending across said substrate, said flat sheet portion having a mean pore size of 25-45 microns and said ribs having a mean pore size 60-75% of said flat sheet portion mean pore size.

4,374,907

GASEOUS HYDROGEN AND OXYGEN COMBINING AND CONDENSING DEVICE

Karl T. Chuang, Deep River; Maurice F. Roett, Calgary, and Francis W. Lemon, Ottawa, all of Canada, assignors to Atomic Energy of Canada Limited, Ottawa, Canada

Filed Sep. 1, 1981, Ser. No. 298,301

Claims priority, application Canada, Sep. 29, 1980, 363142

Int. Cl.[3] H01M *10/52*

U.S. Cl. 429—57 **7 Claims**

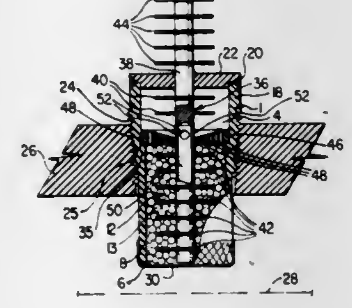

1. A gaseous hydrogen and oxygen combining and condensing device, comprising:

(a) an inverted, cup-shaped casing,

(b) a partition dividing the casing interior into an upper, condensing chamber and a lower, gaseous hydrogen and oxygen combining, catalyst chamber, the partition having drainage passages for distributing draining condensed water, from the condensing chamber, across the interior of the catalyst chamber,

(c) a gaseous hydrogen and oxygen combining catalyst assembly partially filling the interior of the catalyst chamber, the catalyst assembly having passages therethrough for the upward flow through the catalyst assembly of gaseous hydrogen and oxygen and the downward flow through the catalyst assembly of condensed water draining from the condensing chamber, the catalyst assembly comprising at least one catalyst support, and a coating on the support, the coating comprising a porous matrix of polytetrafluoroethylene and exposed, partially platinized high surface area carbon particles dispersed throughout the porous matrix, the partially platinized high surface area carbon particles being present in the porous matrix in a weight ratio in the range extending from of the order of 1.5:1 to of the order of 6:1 polytetrafluoroethylene to partially platinized, high surface area carbon particles, and

(d) a heat conducting assembly for conducting heat from the upper, condensing chamber, the heat conducting assembly comprising a heat conducting rod sealed to and extending through an upper wall of the casing, heat exchange discs above the casing and secured to the rod above the upper wall of the casing and heat exchange discs in the condensing chamber and secured to the rod, all of the heat exchange discs being secured to the rod for the transmission of heat to and from the rod.

4,374,908

TUBULAR ELECTRODE

Alfons S. M. Lindholm, Herserudsvagen 2C, S-181 34 Lidingo, and Rolf C. G. Magnusson, Matrosvagen 5, S-133 00 Saltsjobaden, both of Sweden

PCT No. PCT/SE80/00029, § 371 Date Sep. 30, 1980, § 102(e) Date Sep. 26, 1980, PCT Pub. No. WO80/01626, PCT Pub. Date Aug. 7, 1980

PCT Filed Jan. 30, 1980, Ser. No. 206,607

Claims priority, application Sweden, Jan. 30, 1979, 7900812

Int. Cl.[3] H01M *2/18*

U.S. Cl. 429—140 **10 Claims**

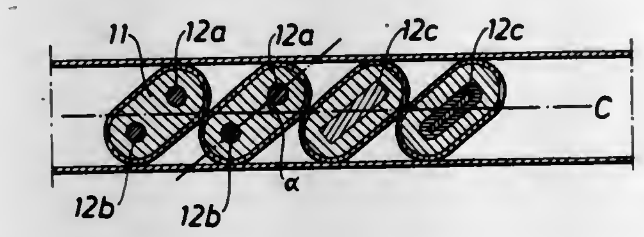

1. A battery electrode structure comprising:

a generally planar first electrode;

a plurality of elongate, permeable tube casings each having a generally oval cross-sectional shape, arranged parallel to one another at an angle to the first electrode of between about 25° and 50°, and touching one another along longitudinal contact lines, said angle measured from the major axis of the cross-section of said tube casing;

a second electrode arranged within each said tube casing; and

an active material substantially filling a volume within said tube casings between said second electrodes and an internal surface of said respective tube casings.

4,374,909

SEALS FOR ELECTROCHEMICAL CELLS

Gary R. Tucholski, Parma Heights, Ohio, assignor to Union Carbide Corporation, Danbury, Conn.

Filed Jun. 26, 1981, Ser. No. 277,730

Int. Cl.[3] H01M *2/08*

U.S. Cl. 429—174 **8 Claims**

1. A sealed electrochemical cell comprising a cathode material, an anodic material and an electrolyte housed in a cylindrical container having an upstanding wall and being sealed at its open end by a closure means which comprises a first cover and a first nonconductive gasket, said nonconductive gasket compressed between the interface of the first cover and the container providing a primary seal, the improvement wherein a second cover is disposed over the first cover, an outer cylindrical member open at both ends is disposed around the upstanding cylindrical wall of the container, and a second gasket is disposed and compressed between the interface of the upper portion of the cylindrical member and the second cover and

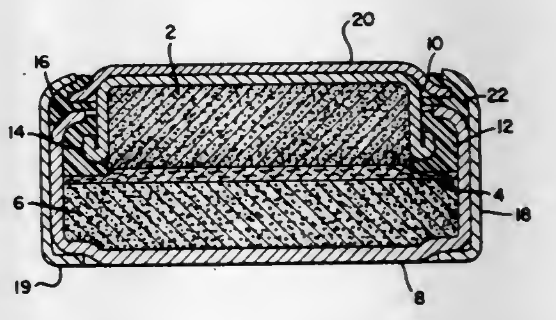

said second gasket is further disposed and compressed between the second cover and the container thereby forming a second seal for the cell.

4,374,910

ELECTROLYTE FOR SECONDARY ELECTROCHEMICAL CELL

Paul G. Glugla, Schenectady, N.Y., assignor to General Electric Company, Schenectady, N.Y.

Filed Sep. 22, 1981, Ser. No. 304,494

Int. Cl.[3] H01M *6/14*

U.S. Cl. 429—197 **10 Claims**

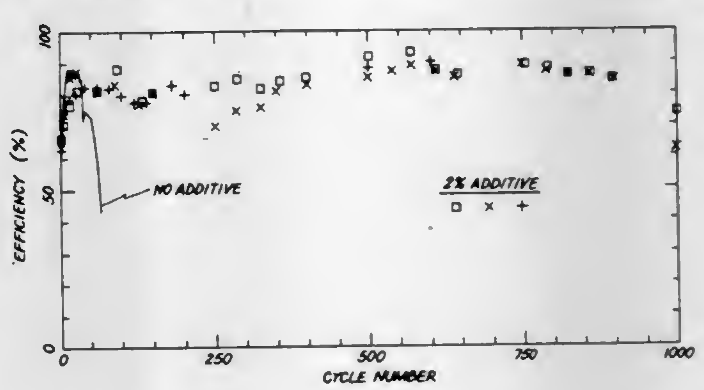

1. In a secondary electrochemical cell wherein the active material of one of the electrodes is lithium metal, the improvement comprising an electrolyte consisting essentially of 2-methoxyethanol and a solution composed of one or more solvents selected from the group which has the formula:

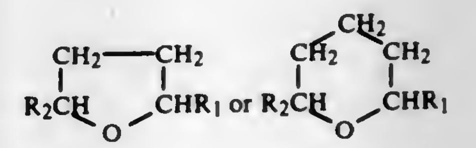

where R_1 and R_2 are both methyl groups or one of them is a methyl group and the other is hydrogen and an ionically dissociable lithium salt, said 2-methoxyethanol ranging in amount from about 0.5% by weight of said solution to an amount wherein the resulting electrolyte does not exhibit a significant rate of gas evolution.

4,374,911

PHOTO METHOD OF MAKING TRI-LEVEL DENSITY PHOTOMASK

Phillip A. Hartley, Vestal, N.Y., assignor to International Business Machines Corporation, Armonk, N.Y.

Continuation of Ser. No. 901,044, Apr. 28, 1978, abandoned. This application Jan. 14, 1980, Ser. No. 112,246

Int. Cl.[3] G03C *5/04;* **G03F** *1/00*

U.S. Cl. 430—5 **2 Claims**

1. A method of fabricating a patterned photomask having at

least three zones of differing light transmissibility by the steps of:

(a) forming a first mask from a predetermined pattern, said first mask having only two zones of differing light transmissibility when formed;

(b) forming a temporary mask from a selected portion of the zone of said pattern having the greater light transmissibility;

(c) forming a second mask by printing the photographic equivalent of said temporary mask on diazo film which

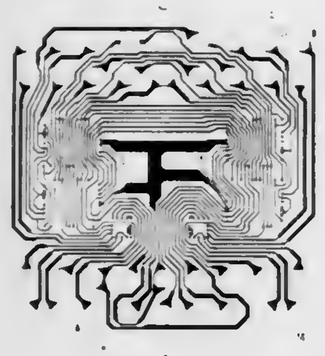

blocks the transmission of ultraviolet light, said second mask being the photographic opposite of said first mask;

(d) aligning said first and second masks so that said selected portion of said second mask is superimposed over its own location in said first mask;

(e) forming a composite latent image of said aligned first and second masks by projecting light therethrough onto a suitable photographic emulsion; and

(f) developing and fixing said composite latent image to form said patterned photomask.

4,374,912

PHOTOMASK AND PHOTOMASK BLANK

Satoru Kaneki, Sayama; Yuzi Kikuchi, Sakado, and Yoji Sasaki, Kokubunji, all of Japan, assignors to Dai Nippon Insatsu Kabushiki Kaisha, Tokyo, Japan

Filed Nov. 10, 1981, Ser. No. 319,962

Claims priority, application Japan, Mar. 31, 1981, 56-47922; Mar. 31, 1981, 56-47923

Int. Cl.³ B32B *9/00*

U.S. Cl. 430—5 **10 Claims**

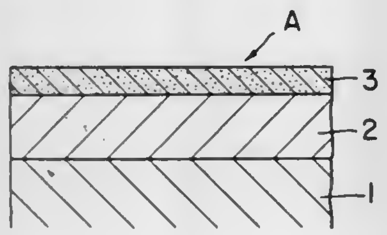

7. A photomask comprising a transparent substrate and a patternized multi-layer masking film provided on the substrate, said multi-layer masking film comprising a layer of tantalum and a composite layer of tantalum oxide and tantalum nitride laminated on said tantalum layer.

4,374,913

GRANULATED SCREEN AND A METHOD OF MANUFACTURING SAME

Hans E. Müller, Dielsdorf, Switzerland, assignor to Licht Druck Ag, Switzerland

Filed Jul. 2, 1981, Ser. No. 280,160

Claims priority, application Europen Pat. Off., Feb. 5, 1981, 81 100 822

Int. Cl.³ G03F *5/00*

U.S. Cl. 430—6 **3 Claims**

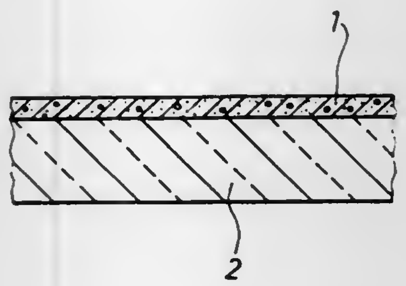

1. A method of manufacturing a granulated screen comprising depositing a thin asphalt solution on a plate of glass; drying said asphalt solution under the influence of light to form a fine grain having a grain number of at least about 300 grains/cm; and optically printing said grain onto a photosensitive material.

4,374,914

PROCESS FOR THE PRODUCTION OF NEGATIVE COLOR IMAGES BY THE SILVER DYE BLEACH PROCESS, AND THE SILVER DYE BLEACH MATERIAL USED IN THIS PROCESS

Herbert Mollet, Tentlingen, and Dieter Wyrsch, Marly, both of Switzerland, assignors to Ciba-Geigy Ltd., Basel, Switzerland

Filed Jul. 13, 1981, Ser. No. 282,777

Claims priority, application Switzerland, Jul. 22, 1980, 5589/80

Int. Cl.³ E03C *7/00*

U.S. Cl. 430—15 **16 Claims**

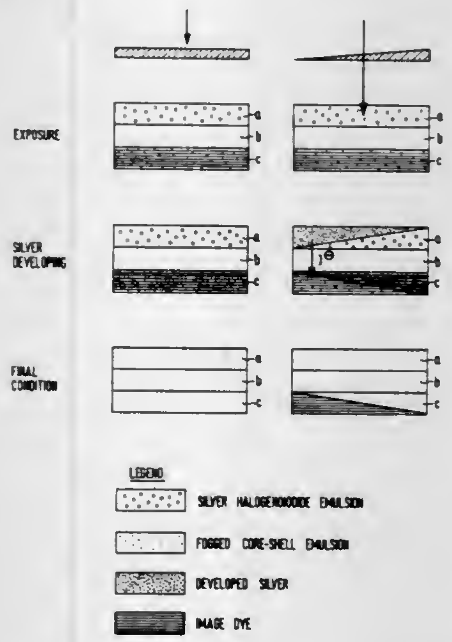

1. A process for the production of negative colour images by the silver dye bleach process, by exposure of a photographic silver dye bleach material, silver developing, dye bleaching, silver bleaching and fixing, the silver bleaching being optionally carried out simultaneously with the dye bleaching and/or the fixing, in a single treatment bath, in which process the photographic silver dye bleach material consists of a support with at least one layer assembly of three layers in each case, each layer assembly containing, as viewed from the same side as the incident light:

(a) a first layer which contains a highly sensitive and optionally spectrally sensitised silver halogenoiodide emulsion,

(b) an intermediate layer containing neither silver halide nor image dye, and

(c) a third layer which contains a bleachable image dye and a core-shell emulsion which is free of iodide or has a low iodide content, the particles of which emulsion consist of a surface-fogged silver halide core optionally treated with a developing retarder, and of a silver halide shell enclosing the said core, it being possible for this emulsion to be developed spontaneously up to the maximum density by the action of a developer, the photographic material, in the case where it consists of more than one layer assembly, optionally contains intermediate layers (d) between the layer assemblies and the developing is carried out in a developer solution which is free of silver-complexing agent.

4,374,915

HIGH CONTRAST ALIGNMENT MARKER FOR INTEGRATED CIRCUIT FABRICATION

C. Norman Ahlquist, Menlo Park; Yaw Wen Hu, San Jose; Peter F. Schoen, Redwood City Marina, and Paul A. Poenisch, Santa Clara, all of Calif., assignors to Intel Corporation, Santa Clara, Calif.

Filed Jul. 30, 1981, Ser. No. 288,519

Int. Cl.³ G03F *9/00;* G03C *11/00*

U.S. Cl. 430—22 **5 Claims**

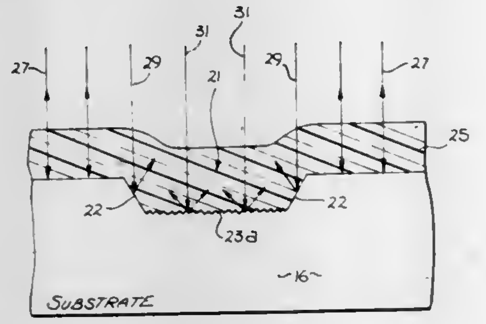

1. In the fabrication of integrated circuits on a substrate wherein radiation is passed through a masking member to expose certain regions of a photosensitive layer, a process for forming an improved marker for permitting better alignment between said masking member and said substrate, comprising the steps of:

forming a photoresist layer on said substrate;

forming an opening in said layer at the proposed site of said marker;

etching a depression in said substrate in said substrate at said opening, said depression including sloped sides and a generally planer bottom region;

roughening said bottom region such that said bottom region directly reflects less radiation than said substrate surface;

whereby a high contrast marker for use in aligning said masking member with said substrate is formed.

4,374,916

ELECTRICALLY CONDUCTIVE INTERLAYER FOR ELECTRICALLY ACTIVATABLE RECORDING ELEMENT AND PROCESS

Mark Lelental, and Gary M. Goncher, both of Rochester, N.Y., assignors to Eastman Kodak Company, Rochester, N.Y.

Filed Nov. 27, 1981, Ser. No. 325,270

Int. Cl.³ G03G *17/00*

U.S. Cl. 430—31 **24 Claims**

1. In an electrically activatable recording element comprising an electrically conductive support having thereon, in sequence:

(a) an electrically activatable recording layer,

(b) a photoconductive layer, and

(c) an electrically conductive layer, the improvement wherein the electrically activatable recording layer (a) and photoconductive layer (b) are separated by an electrically conductive interlayer comprising electrically conductive particles uniformly dispersed in an electrically insulating binder.

23. A dry, electrically activatable recording process for producing a dye enhanced silver image in an electrically activatable recording element comprising, on an electrically conductive support, in sequence:

(a) a polymeric electrically active conductive layer,

(b) an electrically activatable recording layer comprising:

(A) a dye-forming coupler, and

(B) an oxidation-reduction combination comprising:

(i) an organic silver salt oxidizing agent with

(ii) a reducing agent which, in its oxidized form, forms a dye with said dye-forming coupler, having thereon:

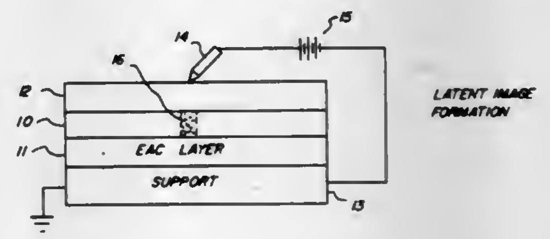

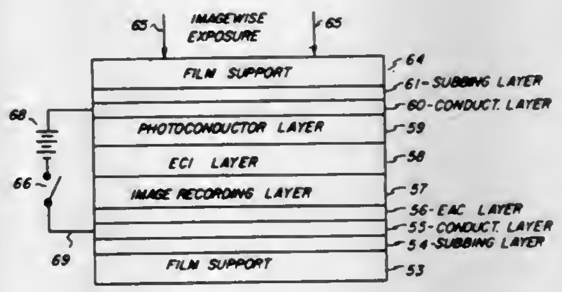

(c) a separable, electrically conductive, film interlayer comprising electrically conductive particles dispersed in an electrically insulating binder,

said process comprising the steps of:

(I) positioning a photoconductive element comprising an electrically conductive support on said film interlayer;

(II) imagewise exposing said photoconductive element to actinic radiation while simultaneously applying an electrical potential of sufficient magnitude and for a sufficient time across said photoconductive element and said recording element to produce a latent image in the areas of said recording layer corresponding to the exposed areas of said photoconductive element; and

(III) substantially uniformly heating the recording element at a temperature and for a time sufficient to produce a dye enhanced silver image in said recording element.

4,374,917

INFRARED PHOTOCONDUCTOR FOR ELECTROPHOTOGRAPHY OF A COPPER ACTIVATED MERCURY CONTAINING CADMIUM SELENIDE TELLURIDE

Sixdeniel Faria, Towanda, Pa., assignor to GTE Products Corporation, Stamford, Conn.

Filed Dec. 11, 1981, Ser. No. 329,894

Int. Cl.³ G03C *1/00;* G03G *5/087, 5/04*

U.S. Cl. 430—94 **4 Claims**

1. A copper-activated mercury-containing cadmium selenide telluride infrared-responsive photoconductor.

4,374,918

THERMALLY STABLE LIQUID NEGATIVE DEVELOPER

Norman T. Veillette, Hollis, N.H.; Charles H. C. Pian, Lexington, Mass., and Tahsin A. Ashour, Amherst, N.H., assignors to Nashua Corporation, Nashua, N.H.

Filed Sep. 16, 1981, Ser. No. 302,504

Int. Cl.³ G03G *9/12*

U.S. Cl. 430—115 **22 Claims**

1. A liquid negative developer composition of improved storage and thermal stability for developing an electrostatic latent image on the surface of an image bearing member, said composition comprising:

an organic liquid carrier having a resistivity greater than 10^9 ohm-cm and a dielectric constant less than 3;

a pigment;

a gel on the borderline of solubility in said carrier;

a latex which is insoluble in said carrier, and

a two-component charge control agent for imparting a negative charge to said composition consisting essentially of

a first polymer, soluble in said carrier, containing multiple moieties of basic character and comprising a major amount of monomer units (A) selected from the group consisting of:

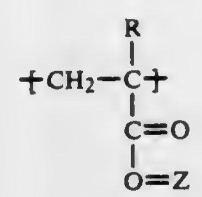

and a minor amount of monomer units (B) selected from the group consisting of:

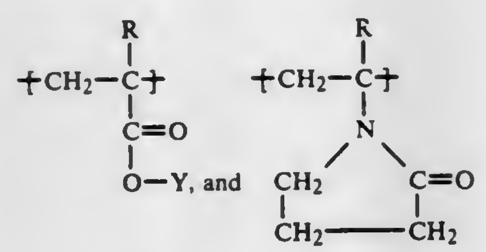

wherein R. is CH_3 or H, Z is a hydrocarbon chain having 8–20 carbon atoms, and Y is a hydroxylated alkyl group; and

a second polymer, insoluble in said carrier, containing multiple halogen moities of acid character and a minor amount of carrier-soluble moities.

4,374,919

DIFFUSION TRANSFER COLOR PHOTOGRAPHIC ELEMENT WITH U.V. ABSORBING AGENT ADJACENT PROTECTIVE LAYER

Masaharu Toriuchi, Minami-ashigara, Japan, assignor to Fuji Photo Film Co., Ltd., Kanagawa, Japan

Filed Oct. 2, 1981, Ser. No. 307,999

Claims priority, application Japan, Oct. 2, 1980, 55-138101

Int. Cl.³ G03C *1/40, 5/54, 1/84*

U.S. Cl. 430—220 **8 Claims**

1. A diffusion transfer color photographic element comprising (1) a light-sensitive sheet comprising a support having superposed thereon at least one silver halide emulsion layer having associated therewith a color image-providing compound, (2) a cover sheet comprising a support having thereon in sequence at least one neutralizing layer and at least one neutralization timing layer where said light-sensitive sheets and said cover sheet are arranged so that they may contact with each other on the sides opposite to their respective support sides, (3) an aqueous alkaline processing composition to be spread in a uniform layer between said light-sensitive sheet and said cover sheet, wherein said light-sensitive sheet (1) further comprising a protective layer which consists essentially of a hydrophilic colloid at a position farthest from the support thereof and a layer comprising an organic ultraviolet absorbant at adjacent to said protective layer and closer to the support thereof than said protective layer, and a dye-image receiving layer.

4. The diffusion transfer color photographic element as in claim 1, wherein said ultraviolet absorbant has a molecular absorbancy index of 5,000 or more in the maximum absorption wavelength range of 300 nm to 390 nm and is oil soluble insoluble in water in the pH range of 3 to 8.

4,374,920

POSITIVE DEVELOPER CONTAINING NON-IONIC SURFACTANTS

Stanley F. Wanat, Scotch Plains, and Shane Hsieh, Bridgewater, both of N.J., assignors to American Hoechst Corporation, Somerville, N.J.

Filed Jul. 27, 1981, Ser. No. 287,465

Int. Cl.³ G03C *5/24*

U.S. Cl. 430—331 **8 Claims**

1. A developer for positive working photographic elements which comprises an aqueous solution of hydroxide ions having a pH above about 7.0 provided from an alkali having a concentration in the developer which ranges from about 0.2 to about 10 percent by weight; and a compatible non-ionic surfactant selected from the group consisting of one or more of tetramethyl decynediol and ethoxylated tetramethyl decynediol.

4,374,921

IMAGE ENHANCEMENT OF PHOTOTHERMOGRAPHIC ELEMENTS

Robert A. Frenchik, Sommerset, Wis., assignor to Minnesota Mining and Manufacturing Company, St. Paul, Minn.

Filed Jun. 8, 1981, Ser. No. 271,408

Int. Cl.³ G03C *1/52, 1/02*

U.S. Cl. 430—338 **9 Claims**

1. A photothermographic layer comprising a binder, a silver source material, photographic silver halide in catalytic proximity to said silver source material, and a reducing agent for silver ion, characterized by the fact that the reducing agent comprises at least one indoaniline leuco dye having the formula:

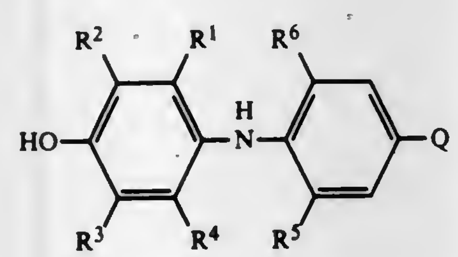

wherein

R^1=H, alkyl, alkoxy

R^2=H, Cl

R^3=H, Cl

R^4=H, alkyl, alkoxy

R^5=H, alkyl, alkoxy

R^6=H, alkyl, alkoxy

Q=dialkylamine, acetamide, and

wherein at least two of R^1, R^2, R^3, and R^4 must be H; which dye is in the presence of at least one aromatic carboxylic acid and at least one p-alkylphenyl sulfonic acid in reactive associate with said layer.

4,374,922

METHOD FOR THE FORMATION OF A DYE IMAGE

Keiji Obbayashi, Sagamihara; Akihiko Miyamoto, Odawara; Masaru Iwagaki, Odawara, and Makoto Kajiwara, Odawara, all of Japan, assignors to Konishiroku Photo Industry Co., Ltd., Tokyo, Japan

Filed Jul. 10, 1981, Ser. No. 282,258

Claims priority, application Japan, Jul. 11, 1980, 55-93909

Int. Cl.³ G03C *7/00*

U.S. Cl. 430—383 **6 Claims**

1. A method for the formation of a dye image comprising the steps of:

color-developing in an alkaline bath a silver halide color photographic light-sensitive material comprising a support, component layers, said layers being provided on said support and having a swelling degree of less than 250 in said alkaline bath, and components comprising an aromatic primary amine color developing agent or a precursor thereof, a nondiffusing yellow coupler, a nondiffusing magenta coupler and a nondiffusing phenolic cyan coupler having a substituted or unsubstituted acylamino group at the second and fifth positions thereof; and

processing said material in a bleach-fixing bath.

4,374,923

DIRECT POSITIVE SILVER HALIDE PHOTOGRAPHIC LIGHT-SENSITIVE MATERIAL

Shigeo Hirano; Tadao Sugimoto, and Nobuyuki Tsujino, all of Minami-ashigara, Japan, assignors to Fuji Photo Film Co., Ltd., Kanagawa, Japan

Filed Nov. 17, 1981, Ser. No. 322,137

Claims priority, application Japan, Nov. 19, 1980, 55-162967

Int. Cl.³ G03C *1/36*

U.S. Cl. 430—410 **26 Claims**

1. A direct positive silver halide photographic light-sensitive material comprising a support having coated thereon at least one light-sensitive internal latent image silver halide photographic emulsion layer, said silver halide photographic emulsion not being previously fogged, wherein at least one layer of the light-sensitive silver halide photographic emulsion layers and other hydrophilic colloid layers contains a fogging amount of a compound represented by formula (I)

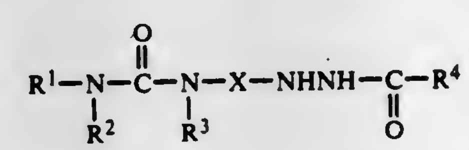

(I)

wherein R^1 and R^2 can each represent a hydrogen atom, an aliphatic group, an aromatic group, or a heterocyclic group; R^3 represents a hydrogen atom or an aliphatic group; R^4 represents a hydrogen atom, an aliphatic group, or an aromatic group; and X represents a divalent aryl group.

4,374,924

ANTISTATIC SILVER HALIDE PHOTOGRAPHIC LIGHT-SENSITIVE MATERIAL

Shigeki Yokoyama; Shinzo Kishimoto; Itsuki Toriya, and Taku Nakamura, all of Minami-ashigara, Japan, assignors to Fuji Photo Film Co., Ltd., Kanagawa, Japan

Continuation of Ser. No. 87,837, Oct. 24, 1979, abandoned. This application Feb. 24, 1982, Ser. No. 351,812

Claims priority, application Japan, Oct. 24, 1978, 53-130841

Int. Cl.³ G03C *1/02*

U.S. Cl. 430—528 **21 Claims**

1. A silver halide photographic light-sensitive material having at least one antistatic layer of low surface electric resistance, good adhesion and which does not suffer from scum during development as an outermost backing layer, said antistatic layer containing a dispersion of a polymer represented by the following formula (I):

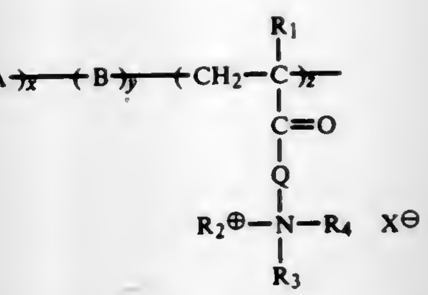

(I)

wherein A represents a monomer unit formed from a copolymerizable monomer having at least two ethylenically unsaturated groups, B represents a monomer unit formed from a copolymerizable and monethylenically unsaturated monomer, R_1 represents a hydrogen atom or a lower alkyl group having 1 to 6 carbon atoms, Q represents a divalent group containing 1 to 12 carbon atoms, wherein Q is selected from the class consisting of —O—R_6 and —NH—R_6—, wherein R_6 is an alkylene group containing 1 to 6 carbon atoms, R_2, R_3 and R_4 may be the same or different and each represents an alkyl group containing 1 to 20 carbon atoms, or an aralkyl group containing 7 to 20 carbon atoms, or R_2, R_3 and R_4 may combine to form a ring together with the nitrogen atom, $X^{\ominus}$ represents an anion, x is about 0.25 to 10 mol%, y is about 0 to 90 mol%, and z is about 10 to 99 mol%.

4,374,925

MACROMOLECULAR ENVIRONMENT CONTROL IN SPECIFIC RECEPTOR ASSAYS

David J. Litman, Palo Alto; Zvi Harel, Stanford, and Edwin F. Ullman, Atherton, all of Calif., assignors to Syva Company, Palo Alto, Calif.

Division of Ser. No. 964,099, Nov. 24, 1978, Pat. No. 4,275,149. This application Feb. 9, 1981, Ser. No. 232,777

The portion of the term of this patent subsequent to Jun. 23, 1998, has been disclaimed.

Int. Cl.³ G01N *33/54*

U.S. Cl. 435—7 **4 Claims**

1. An assay method for determining the presence in a sample of an analyte, wherein the ligand with its homologous antiligand define a specific binding pair,

wherein said method employs (1) a medium comprised of an aqueous buffered continuous phase at a pH in the range of about 6.5 to 9.5 and a discontinuous solid phase of dispersable porous discrete particles to which is conjugated one of the members of said specific binding pair and the enzyme β-galactosidase to provide a particle conjugate and (2) a signal producing system capable of producing a measurable signal and having a second enzyme alkaline phosphatase conjugated to a member of said specific binding pair to provide a signal label conjugate, wherein said first and second enzymes with 4-methylumbelliferyl-β-D-galactopyranoside-6-phosphate define said signal producing system, said particle conjugate defining an environment which affects the production of a fluorescent signal differently from said aqueous medium, so that said measurable signal varies in relation to the partitioning of said signal label conjugate between said particles and said aqueous medium, said partitioning being related to the amount of analyte in said medium,

said method comprising:

combining in said aqueous medium,

(a) said sample;

(b) said particle conjugate substantially uniformly dispersed in said aqueous medium;

(c) said signal label conjugate;

(d) the homologous member of said specific binding pair, when said analyte, particle conjugate and signal label conjugate have the same member; and

(e) 4-methylumbelliferyl-β-D-galactopyranoside-6-phosphate,

whereby said signal label conjugate will be partitioned be-

tween said aqueous medium and said particle conjugate to a degree dependent upon the amount of ligand in said sample; and

determining the level of said fluorescent signal as compared to an assay medium having a known amount of analyte.

4,374,926

METHOD FOR THE PRODUCTION OF IMPROVED CHYMOPAPAIN

Ivan J. Stern, Chicago, Ill., assignor to Smith Laboratories, Inc., Northbrook, Ill.

Filed May 13, 1981, Ser. No. 263,196

Int. Cl.[3] C12Q *1/38;* **C12N** *9/50*

U.S. Cl. 435—23 **20 Claims**

1. A process for the purification of crude chymopapain to produce a purified chymopapain of reduced toxicity comprising:

(a) contacting an aqueous buffered solution of crude chymopapain with a weakly acidic cationic exchanger comprising a column of carboxymethyl substituted cross-linked agarose gel, said exchanger having been previously equilibrated with aqueous buffer solution having a pH of between about 6.5 and 7.5;

(b) eluting the chymopapain retained on the exchanger with a similar aqueous buffer solution having a pH in the same pH as the buffer used for equilibrating the carboxymethyl substituted agarose gel, but having a linearly increasing ionic concentration of a compatible, non-reactive, water-soluble, pharmaceutically acceptable, neutral inorganic salt with respect to eluent volume;

(c) collecting and discarding a first series of fractions of eluent from said exchanger containing an initial protein component from crude chymopapain until the molarity of the eluent with respect to said soluble salt increases to and reaches the range of 0.25 to 0.4;

(d) continuously collecting and retaining a further series of fractions of chymopapain eluted from the exchanger comprising two proteolytically active chymopapain components at increasing soluble salt concentrations greater than about 0.25 to 0.4 molar, until substantially all of the said absorbed cymopapain is recovered;

(e) treating said retained fractions containing proteolytically active components of the chymopapain to remove the dissolved ionic inorganic salts, and buffer components; and

(f) lyophilizing the essentially salt-free chymopapain solution to produce a dry, purified proteolytically active chymopapain essentially free of proteolytically inactive or toxic components.

20. A method of identifying a purified chymopapain essentially free of proteolytically inactive, antigenic and colored material, which comprises the essential absence of a precipitate formation of an acidified solution of said purified chymopapain when contacted with a U.S.P. test solution barium chloride.

4,374,927

EXTRACHROMOSOMAL REGULATION OF EXPRESSION

John J. Sninsky, Mountian View, and Stanley N. Cohen, Portola Valley, both of Calif., assignors to The Board of Trustees of the Leland Stanford Jr. University, Stanford, Calif.

Filed Feb. 24, 1981, Ser. No. 237,555

Int. Cl.[3] C12P *21/00, 21/02;* **C12N** *15/00, 1/20, 1/00;* **C12R** *1/19*

U.S. Cl. 435—68 **32 Claims**

1. A method for producing a poly(amino acid) product on demand, said method comprising:

(a) growing to a high density transformant microorganism host cells having at least one extrachromosomal element capable of replication in said host cells which includes:

(1) an activatable runaway-replication vector,

(2) components of a first regulatory system comprising a first regulatory element subject to control by an external modulator, wherein said first regulatory element regulates a gene producing a control factor,

(3) components of a second regulatory system comprising a second regulatory element, subject to control by said control factor, wherein said second regulatory element regulates a gene producing a poly(amino acid) product,

(4) a gene expressing a poly(amino acid) product replicated in conjunction with said runaway-replication-vector,

(5) a gene expressing a control factor;

(b) subjecting said cells to an external modulator which modulates expression of said control factor producing gene in a direction enhancing expression of said product producing gene, while activating said runaway-replication vector, where enhanced expression and amplification of said product producing gene occurs with enhanced production of said poly(amino acid).

16. A microorganism cell having at least one extrachromosomal element capable of replication in said cell which includes:

(1) an activatable runaway-replication vector;

(2) components of a first regulatory system comprising a first regulatory element subject to control by an external modulator, wherein said first regulatory element regulates a gene producing a control factor;

(3) components of a second regulatory system comprising a second regulatory element subject to control by said control factor, wherein said second regulatory element regulates a gene producing a poly(amino acid) product;

(4) a gene expressing said poly(amino acid) product replicated in conjunction with said runaway-replication vector,

(5) a gene expressing a control factor.

4,374,928

NOVEL REDUCTASE

Nathan Brot, West Orange, and Herbert Weissbach, Cedar Grove, both of N.J., assignors to Hoffmann-La Roche Inc., Nutley, N.J.

Filed Jun. 1, 1981, Ser. No. 269,150

Int. Cl.[3] C12P *21/00;* **C12N** *9/02;* **C12Q** *1/26;* **A61K** *37/50*

U.S. Cl. 435—68 **7 Claims**

1. Peptide MetSO reductase being an enzyme endogenous to biological cells and being essentially free of other endogenous peptides, said reductase being characterized as follows:

(i) having the ability to reduce methionine sulfoxide residues in peptides to methionine;

(ii) unable to reduce free methionine sulfoxide to methionine;

(iii) having a molecular weight of about 18,000 to 20,000 (Ultragel); and

(iv) being free of transacetylase activity.

4,374,929

PRODUCTION OF XANTHAN GUM FROM A CHEMICALLY DEFINED MEDIUM INTRODUCTION

William P. Weisrock, Broken Arrow, Okla., and Harriet S. Klein, Glen Ellyn, Ill., assignors to Standard Oil Company (Indiana), Chicago, Ill.

Continuation-in-part of Ser. No. 167,893, Jul. 14, 1980, abandoned. This application Nov. 2, 1981, Ser. No. 317,372

Int. Cl.[3] C12P *19/06;* **C12R** *1/64*

U.S. Cl. 435—104 **15 Claims**

1. A continuous process for the production of a heteropolysaccharide which comprises continuously culturing a microorganism of the genus Xanthomonas in a liquid chemically defined medium free of yeast or other undefined nitrogen source, but containing both a chelating agent and organic supplements in the form of water soluble growth factors which permits said organism to grow and produce said heteropolysaccharide in a stable non-degenerative state and wherein the growth limiting nutrient in said medium is any of the nutrients normally used in said process, culturing said microorganism in said medium without discontinuing the fermentation process and withdrawing heteropolysaccharide from said medium at a rate such that an essentially steady state condition is maintained.

4,374,930

METHOD FOR THE PURIFICATION OF CHOLESTEROL OXIDASE

Roy E. Snoke, Webster, and Charles T. Goodhue, Rochester, both of N.Y., assignors to Eastman Kodak Company, Rochester, N.Y.

Filed Oct. 19, 1981, Ser. No. 312,474

Int. Cl.[3] C07G *7/028*

U.S. Cl. 435—190 **12 Claims**

1. A method for purifying cholesterol oxidase comprising the steps of:

(a) contacting a solution of the cholesterol oxidase to be purified with a composition comprising an unbound water-insoluble steroid which is a nonsubstrate for cholesterol oxidase so as to adsorb said cholesterol oxidase on said steroid;

(b) separating said solution from said steroid; and

(c) contacting said steroid with an eluting solution containing a surfactant at a concentration between 0.001 percent and 10 percent by weight so as to recover said cholesterol oxidase.

4,374,931

PHOTOCHROMIC GLASS SUITABLE FOR OPHTHALMIC APPLICATIONS

Philippe Courbin, Veneux les Sablons, France; David J. Kerko, Corning, N.Y.; Jean P. Mazeau, Avon, France, and David L. Morse, Corning, N.Y., assignors to Corning Glass Works, Corning, N.Y.

Filed Jan. 8, 1982, Ser. No. 338,042

Int. Cl.[3] C03C *3/26, 3/08, 3/10*

U.S. Cl. 501—13 **2 Claims**

1. A photochromic glass composition consisting essentially, expressed in terms of weight percent on the oxide basis is calculated from the batch, of

SiO_2	52–59
B_2O_3	18–23
Al_2O_3	6–8
Li_2O	1–2.5
Na_2O	1–3
K_2O	8–13
ZrO_2	2–6
TiO_2	0–3

and containing, as analyzed in weight percent, of

Ag	0.17–0.22
Br	0.06–0.12
Cl	0.29–0.35
CuO	0.012–0.019
PbO	0.1–0.15

demonstrating, in 0.4 mm cross section, a clear luminous transmittance in excess of 90%, a darkened luminous transmittance below about 45% at a temperature of 25° C., a darkened luminous transmittance below about 57% at a temperature of 40° C., and a half fading time at both temperatures of about five minutes.

4,374,932

5-ASA DRUG DELIVERY SYSTEM

Barnett S. Pitzele, Skokie, and Peter H. Jones, Lake Bluff, both of Ill., assignors to G. D. Searle & Co., Skokie, Ill.

Filed Jun. 8, 1981, Ser. No. 271,748

Int. Cl.[3] B01J *41/14;* **A61K** *31/74*

U.S. Cl. 521—32 **2 Claims**

1. A polymeric anionic exchange complex comprising a pharmacologically acceptable, non-absorbable, non-degradable anionic exchange resin and the dianionic form of 5,5′-azobis salicylic acid.

4,374,933

METHOD OF PREPARATION OF POROUS MEMBRANES AND ADSORBENTS

Horst Scholze, Würzburg; Helmut Schmidt, Höchberg, and Harald Böttner, Gerbrunn, all of Fed. Rep. of Germany, assignors to Fraunhofer-Gesellschaft, Munich, Fed. Rep. of Germany

Continuation of Ser. No. 160,480, Jun. 18, 1980, abandoned. This application Mar. 23, 1982, Ser. No. 360,996

Claims priority, application Fed. Rep. of Germany, Jun. 27, 1979, 2925969

Int. Cl.[3] C08J *9/24;* **C08G** *77/56*

U.S. Cl. 521—64 **22 Claims**

1. A process for the preparation of a porous heteropolycondensate adsorbent, comprising:

(i) forming a reaction mixture comprising:

(a) at least one hydrolysable silicic acid derivative of the general formula I:

$$SiR_4 \qquad (I)$$

wherein each R is selected from the group consisting of hydrogen, halogen, alkoxy and $—NR'_2$, wherein each R′ is a hydrogen atom or an alkyl group, with the proviso that not all the R radicals are hydrogen atoms, and

(b) at least one substituted silane of the general formula II:

$$SiR_nR''_{(4-n)} \qquad (II)$$

wherein R is as defined above, each R″ is selected from the group consisting of alkyl, alkenyl, aryl and aralkyl and n is an integer from 1 to 3, and

(c) optionally at least one functional silane of the general formula III:

$$SiR_n(R'''Y)_{(4-n)} \qquad (III)$$

wherein R and n have the meanings defined above, each R‴ is selected from the group consisting of alkylene, phenylene, alkylphenylene and alkylenephenylene and Y is selected from the group consisting of halogen, amino, anilino, aldehyde, keto, carboxy, hydroxy, mercapto, cyano, hydroxyphenyl, diazo, carboxylic alkyl ester, sulphonic acid ($—SO_3H$) and phosphoric acid ($—PO_3H_2$), and/or

(d) optionally at least one oxide component selected from the group consisting of non-volatile oxides soluble in the reaction medium and compounds capable of forming non-volatile oxides soluble in the reaction medium, the oxide component being an oxide of an element selected from Groups Ia to Va, Group IVb and Group Vb of the Periodic System, the improvement which comprises:

(ii) subjecting the reaction mixture of hydrolysis and condensation in the presence of 10% to 75% by weight, based on the weight of the reaction mixture, of a condensation catalyst, with the proviso that when water is the condensation catalyst at least the amount of water stoichiometrically required for hydrolysis is used, optionally in the presence of a solvent,

wherein the amounts of the components (a) to (d) are selected so that the resultant silicic acid heteropolycondensate, calculated as oxide units, contains, by weight, 35% to 90% of component (a), 10% to 50% of component (b), 0% to 15% of component (c) and 0% to 40% of component (d) and

(iii) removing said water or solvent and drying the obtained polycondensate thereby obtaining a porous adsorbent having two definite different pore sizes including a smaller

pore size in the nanometer range and a larger pore size in the micrometer range.

4,374,934

SEMI-FLEXIBLE FOAM POLYMER USED IN PACKAGING

Robert J. Raynor, North Branford, Conn., assignor to Olin Corporation, New Haven, Conn.

Filed Mar. 30, 1981, Ser. No. 248,166

Int. Cl.³ C08G *18/14, 18/48*

U.S. Cl. 521—112 **9 Claims**

1. A semi-flexible foam polymer having a density of from about 0.35 to about 1 pound per cubic foot, said polymer being prepared from a reaction mixture having an over-all index of about 20 to about 70, wherein said reaction mixture comprises:

(a) a polymeric polyisocyanate having an average functionality of about 2 to about 3.5;

(b) a polyether polyol having 2–4 hydroxy groups and a molecular weight from about 500 to about 3,000, said polyether polyol being employed in a proportion of about 10 to about 70 parts per every 100 parts by weight of total polyisocyanate in said reaction mixture;

(c) a foaming agent which consists essentially of water and is substantially free of fluorinated hydrocarbon compounds, said foaming agent being employed in a proportion of about 7 to about 30 parts per every 100 parts of total polyisocyanate in said reaction mixture;

(d) an amine catalyst; and

(e) a silicon-based surfactant.

4,374,935

PROCESS FOR THE PREPARATION OF FLEXIBLE POLYURETHANE FOAMS EMPLOYING POLYESTER-POLYETHER POLYOL MIXTURES

Walter Decker, Ludwigshafen; Ernst Schoen, Neustadt; Herbert Grabhoefer, Ludwigshafen, and Peter Weyland, Frankenthal, all of Fed. Rep. of Germany, assignors to BASF Aktiengesellschaft, Ludwigshafen, Fed. Rep. of Germany

Filed Jan. 4, 1982, Ser. No. 336,878

Claims priority, application Fed. Rep. of Germany, Jan. 10, 1981, 3100524

Int. Cl.³ C08G *18/14, 18/42, 18/32*

U.S. Cl. 521—173 **7 Claims**

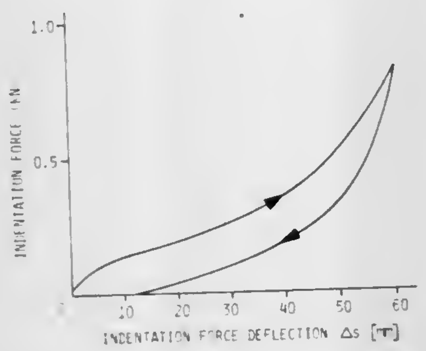

1. A process for the preparation of flexible polyurethane foams by reacting organic polyisocyanates, polyhydroxyl compounds and optionally chain extenders in the presence of catalysts and blowing agents as well as auxiliaries wherein the polyhydroxyl compounds consist of mixtures of

(a) liquid polyester polyols with hydroxyl numbers of 40 to 80 and molecular weights of 1500 through 5000 which are produced by polycondensation of organic dicarboxylic acids with a polyol mixture which contains based on the overall polyol weight:

10 to 50 weight of 1,4-butanediol,

30 to 60 percent by weight of 1,5-pentanediol,

8 to 35 percent by weight of 1,6-hexanediol, and

2 to 15 percent by weight of at least one triol, and

(b) di- to tetra-functional polyether polyols having molecular weights of 1500 to 6000.

4,374,936

LIQUID OF ACRYLIC COPOLYMER AND TETRAHYDROFURANTETRACARBOXYLIC ACID FOR SETTING DENTAL CEMENTS

Kentaro Tomioka, Chofu; Kazuo Hirota, Tokyo; Hiroaki Muramatsu, Gotenba, and Shoji Akahane, Tokyo, all of Japan, assignors to G-C Dental Industrial Corp., Tokyo, Japan

Filed May 14, 1981, Ser. No. 263,724

Claims priority, application Japan, Jun. 4, 1980, 55-74409

Int. Cl.³ C08K *5/09*

U.S. Cl. 523—116 **8 Claims**

1. A liquid for setting dental cements in which a 45 to 55% aqueous solution of a copolymer of acrylic acid and maleic acid contains a tetrahydrofurantetracarboxylic acid in an amount ranging from 10 to 30% based on the total weight.

4,374,937

DISPERSIONS OF SILICEOUS SOLIDS IN LIQUID ORGANIC MEDIA

Jozef Nemcek, Chester; Thomas A. Roberts, Congleton, and Francis R. Sherliker, Runcorn, all of England, assignors to Imperial Chemical Industries Limited, London, England

Continuation of Ser. No. 106,861, Dec. 26, 1979, abandoned. This application Jul. 1, 1981, Ser. No. 279,319

Claims priority, application United Kingdom, Jan. 5, 1979, 7900363; Jan. 5, 1979, 7900364; Jan. 5, 1979, 7900366; Jan. 5, 1979, 7900367; Apr. 4, 1979, 7911712

Int. Cl.³ C08J *3/20;* **C08K** *5/17, 5/52*

U.S. Cl. 523—116 **27 Claims**

1. A composition comprising the following components (a–c) intimately mixed together

(a) a particulate siliceous material having particles below 10 μm in their longest dimension,

(b) a liquid or liquifiable polymerizable organic medium,

(c) a dispersing agent containing a mixture of compounds comprising a phosphorus oxyacid having the formula

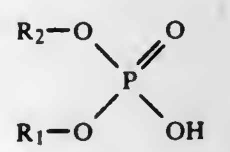

wherein R_1 is an organic group containing a terminal chain which is either a hydrocarbon group having at least six carbon atoms or a polyether of molecular weight greater than 200 (preferably from 500–10,000) R_2 is either a group as specified for R_1, a hydrogen atom, or a hydrocarbyl or substituted hydrocarbyl group not having a terminal chain of at least six carbon atoms and an organic basic nitrogen compound having the formula

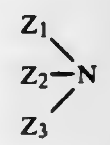

wherein Z_1 is a group as specified for R_1 before and Z_2 and Z_3 which may be the same or different, are as specified for R_2 before.

4,374,938

PROCESS FOR THE DEGRADATION OF POLYMERS

Willem F. Verhelst, Gorssel, and Ulfert E. Wiersum, Velp, both of Netherlands, assignors to Akzona Incorporated, Asheville, N.C.

Filed Feb. 20, 1981, Ser. No. 236,343

Claims priority, application Netherlands, Feb. 29, 1980, 8001231

Int. Cl.³ C08K *5/32*

U.S. Cl. 523—124 **18 Claims**

1. In an improved process for degradation of polymers, the improvement comprises employing as a free radical initiator a compound of the formula

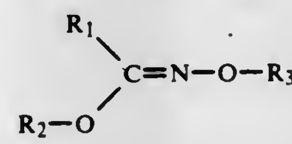

wherein

R_1 is selected from the class consisting of substituted or unsubstituted: C_1–C_{22} alkyl, C_2–C_{22} alkenyl, C_6–C_{20} cyclohexyl, C_6–C_{20}, phenyl, and C_7–C_{20} aralkyl;

R_2 is selected from the class consisting of substituted or unsubstituted: C_1–C_{20} alkyl, C_2–C_{20} alkenyl, C_6–C_{20} cyclohexyl, C_6–C_{20} phenyl, C_7–C_{20} aralkyl, C_2–C_{21} alkylcarbonyl, C_3–C_{21} alkenylcarbonyl, C_7–C_{21} cyclohexylcarbonyl, C_7–C_{21} phenylcarbonyl, C_8–C_{21} aralkylcarbonyl, C_7–C_{21} alkoxycarbonyl, C_3–C_{21} alkenyloxycarbonyl, C_7–C_{21} cyclohexyloxycarbonyl, C_7–C_{21} phenoxycarbonyl and C_8–C_{21} aralkyloxycarbonyl; and

R_3 is hydrogen, a group selected from the class consisting of substituted or unsubstituted: C_1–C_{20} alkyl, C_2–C_{20} alkenyl, C_6–C_{20} cyclohexyl, C_6–C_{20} phenyl, C_7–C_{20} aralkyl, C_2–C_{21} alkylcarbonyl, C_3–C_{21} alkenylcarbonyl C_7–C_{21} cyclohexylcarbonyl, C_7–C_{21} phenylcarbonyl, C_8–C_{21} aralkylcarbonyl, C_7–C_{21} alkoxycarbonyl, C_3–C_{21} alkenyloxycarbonyl, C_7–C_{21} cyclohexyloxycarbonyl, C_7–C_{21} phenyloxycarbonyl and C_8–C_{21} aralkyloxycarbonyl; a

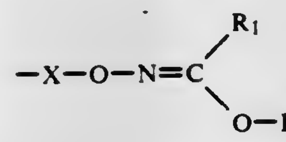

group wherein X is substituted or unsubstituted: C_1–C_{12} alkylene, C_2–C_{12} alkenylene, C_6–C_{12} cycloalkylene or phenylene; or a

—SO_2Y

group wherein Y is substituted or unsubstituted: C_1–C_{20} alkyl, C_6–C_{20} cycloalkyl or phenyl.

4,374,939

MOLD WASH COMPOSITION

James Van Fisk, Jr., and John W. Jordan, both of Houston, Tex., assignors to NL Industries, Inc., New York, N.Y.

Filed Dec. 31, 1979, Ser. No. 108,534

Int. Cl.³ C08K *3/34*

U.S. Cl. 523—139 **47 Claims**

1. A composition for use in a mold wash formulation comprising an intimate, dry mixture of a water soluble polymer of a monoolefinic carboxylic acid monomer having the general formula:

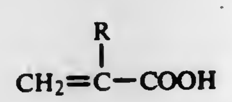

wherein R is selected from the class consisting of hydrogen, monovalent alkyl radicals, monovalent aryl radicals, monovalent aralkyl radicals, monovalent alkaryl radicals and monovalent cycloaliphatic radicals, a clay having a liquid limit number of greater than 600 with high swelling capacity in water, and a solids suspension control additive comprising (a) a flocculant comprising a water soluble salt of a polyvalent metal ion, and (b) a peptizing agent.

4,374,940

ANAEROBIC COMPOSITIONS

Yog R. Bhatia, Glen Ellyn, Ill., assignor to The Henkel Corporation, Minneapolis, Minn.

Filed Jun. 16, 1981, Ser. No. 274,106

Int. Cl.³ C08F *2/38, 4/28, 22/06*

U.S. Cl. 523—176 **12 Claims**

1. An anaerobic curing composition comprising a compound capable of curing under anaerobic conditions, the improvement thereon comprising including in the composition a member selected from the group consisting of a meta-dialkyl substituted toluidine wherein the alkyl groups are selected from the group consisting of ethyl, n-propyl, isopropyl, n-butyl, 1-methyl propyl and 2-methyl propyl and mixtures thereof said composition being substantially free of a stabilizing inhibitor said inhibitor being present at not more than 300 ppm based on the total weight of the composition, wherein the inhibitor has an oxidation-reduction potential of 0.6 volt or less.

4,374,941

PARTICLE SIZE CONTROL OF SBR/CARBON BLACK POWDER

Paul H. Sandstrom, Tallmadge, Ohio, assignor to The Goodyear Tire & Rubber Company, Akron, Ohio

Filed Aug. 27, 1981, Ser. No. 297,035

Int. Cl.³ C08J *3/16, 3/22;* **C08K** *3/04, 9/04*

U.S. Cl. 523—206 **9 Claims**

1. A process for the production of tack-free, pourable, filler containing elastomer powder which comprises

(a) dispersing a reinforcing type carbon black filler in water, said carbon black being selected from the group consisting of high abrasion furnace (HAF), intermediate super abrasion fuurnace (ISAF), and fast extrusion furnace (FEF),

(b) mixing the thus dispersed carbon black filler with an elastomer latex, said latex being selected from the group of styrene/butadiene rubbers, acrylonitrile/butadiene rubbers, polypropylene rubbers, polybutadiene rubbers, polyisoprene rubbers, and copolymers of dimethyl butadiene/-butadiene rubbers, the improvement comprising

(c) coagulating the thus produced mixture of elastomer latex and carbon black with a two-stage coagulating process, comprising first coagulating the mixture of elastomer latex and carbon black by the use of a dilute salt/acid solution at a pH 3–5, at temperatures varying from 30 to 90° C. wherein the concentration of salt varies between 2–20 parts per hundred of rubber, and the concentration of the salt in the solution may vary between 0.1 and 1.0 percent, and then conducting the second stage coagulation of the mixture by adding sufficient alum to give a concentration of 1 to 10 parts of alum per 100 parts of rubber, adjusting the pH of the mixture to a pH of 2 to 3 with dilute sulfuric acid,

(d) partitioning the thus coagulated suspension with a coating resin by adding a dilute solution of a coating resin to the coagulated particles formed during the first stage coagulation while maintaining the temperature between 70° C. and 90° C. and

(e) filtering, washing and drying the resultant powder dispersion, an additional improvement comprising using as a coating resin a mixture of a styrene/butadiene resin and a styrene/α-methylstyrene or a polystyrene resin wherein the weight ratio of the styrene/butadiene resin to the styrene/α-methylstyrene or polystyrene resin ranges between 4/1 and 1/4, said resins containing a mixture of

added surfactants, the first being sodium lauryl sulfate and the second being a nonionic isooctyl phenoxy polyethoxy ethanol which contains 10 moles of ethylene oxide in the polyethoxy portion thereof, said mixture of surfactants being added in an amount at least 4 percent by weight and being in a weight ratio of sodium lauryl sulfate to the nonionic surfactant ranging from 2/1 to 1/2.

4,374,942

POWDER HAVING A NEGATIVE COEFFICIENT OF LINEAR THERMAL EXPANSION AND A COMPOSITION CONTAINING THE SAME

Akio Takami, and Kazuo Kondo, both of Aichi, Japan, assignors to NGK Spark Plug Co., Ltd., Aichi, Japan

Division of Ser. No. 301,860, Sep. 14, 1981, which is a division of Ser. No. 77,810, Sep. 21, 1979, Pat. No. 4,310,598. This application Jun. 9, 1982, Ser. No. 386,811

Claims priority, application Japan, Sep. 21, 1978, 53-116318; Jan. 5, 1979, 54-41

Int. Cl.³ B32B *15/16, 17/06, 27/20*

U.S. Cl. 523—210 **6 Claims**

1. A sealing composition having a low expansivity which consisting essentially of 50% by weight or less of a β-eucryptite particle having on the surface thereof a single layer of or multiple layers of a member selected from the group consisting of tin oxide, titanium oxide, zirconium oxide and a mixture of two or more of said oxides, said oxides being present in a thickness of about 1μ or less; and a resin.

4,374,943

POLYSULFIDE ALKOXY SILANE COUPLING AGENTS

Thomas C. Williams, Ridgefield, Conn., assignor to Union Carbide Corporation, Danbury, Conn.

Continuation-in-part of Ser. No. 79,499, Sep. 27, 1979, abandoned. This application Jan. 27, 1981, Ser. No. 228,947

Int. Cl.³ C08K *9/12*

U.S. Cl. 523—211 **7 Claims**

1. A dry concentrate which comprises (I) a triorganophosphine of the formula $R^1R^2R^3P$, wherein each of R^1, R^2, and R^3 represents an alkyl radical having up to eight carbon atoms, (II) water, (III) lower alkanol, and (IV) porous inert inorganic solid.

4,374,944

ABS COMPOSITION CONTAINING COAL TAR PITCH

Donald G. Ashburn, and Glendon T. Steady, both of Baton Rouge, La., assignors to United States Steel Corporation, Pittsburgh, Pa.

Filed Mar. 18, 1981, Ser. No. 244,855

Int. Cl.³ C08L *95/00*

U.S. Cl. 524—66 **12 Claims**

1. An extended ABS type resinous plastic composition consisting essentially of:

(a) polymerized acrylonitrile, butadiene and styrene constituting together at least about 50 percent of the composition by weight; and

(b) coal tar pitch intimately mixed with said polymerized acrylonitrile, butadiene and styrene and constituting up to about 40 percent of said composition by weight.

4,374,945

THIOGLYCOLATE AND THIOPROPIONATE SECONDARY STABILIZERS

Koei-Liang Liauw, Wyckoff, and Michael H. Fisch, Wayne, both of N.J., assignors to Witco Chemical Corporation, New York, N.Y.

Filed Mar. 11, 1981, Ser. No. 242,741

Int. Cl.³ C07D *407/12, 303/42, 303/44;* **C08K** *5/58, 5/57, 5/56, 5/36*

U.S. Cl. 524—114 **17 Claims**

1. A thioglycidyl ester compound having the formula R_1-S_y-A-S_yR_2, wherein

A is $(CH_2)_x$—O_n—$(CH_2)_x$

x is 0 to 2; n is 0 or 1;

y is 0 or 1, with the proviso that at least one y is 1;

R_1 is

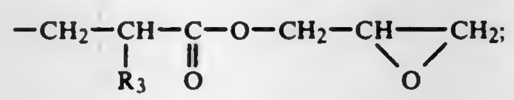

with R_3 being alkyl having one to about six carbon atoms or hydrogen; and R_2 may be R_1; an alkyl having one to about twelve carbon atoms, or carbalkoxy having one to about twelve carbon atoms in the alkoxy group.

4. A stabilizer composition for a vinyl halide, polymer, comprising a primary vinyl halide polymer stabilizer selected from the group consisting of an organometallic compound, an epoxy compound and a metal carboxylate and a thioglycidyl ester compound having the formula:

R_1-S_y-A-S_y-R_2

wherein:

A is $(CH_2)_x$—O_n—$(CH_2)_x$

x is 0 to 2; n is 0 or 1;

y is 0 or 1, with the proviso that at least one y is 1;

R_1 is

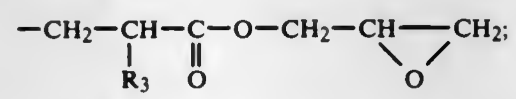

with R_3 being alkyl having one to about 6 carbon atoms or hydrogen; R_2 is R_1, lower alkyl having one to about 12 carbon atoms, or carbalkoxy having one to about 12 carbon atoms in the alkoxy group.

15. A stabilized halogen containing resin composition comprising 0.1 to 10% based on the weight of the resin of a stabilizer composition according to claim 4.

4,374,946

CONCRETE JOINT SEALANT

Yoshifumi Takemura, and Hirokazu Miyazaki, both of Hiroshima, Japan, assignors to Aoi Chemical Inc., Hiroshima, Japan

Filed Sep. 22, 1981, Ser. No. 304,602

Claims priority, application Japan, Sep. 29, 1980, 55-135610

Int. Cl.³ C08L *93/04*

U.S. Cl. 524—271 **7 Claims**

1. A sealant for concrete joints comprising tall pitch, atactic polypropylene, non-reclaimed rubber and 4.8 to 45 weight percent of aliphatic hydrocarbon resin.

4,374,947

METHOD FOR THE THERMAL STABILIZATION OF SULFUR-VULCANIZABLE ELASTOMERS OF THIODIETHANOL

Richard B. Toothill, Warren, and Romeo R. Aloia, Bridgewater, both of N.J., assignors to American Cyanamid Company, Stamford, Conn.

Continuation-in-part of Ser. No. 28,016, Apr. 6, 1979, abandoned. This application May 24, 1982, Ser. No. 381,496

Int. Cl.³ C08K *5/09, 3/32, 3/30, 3/26, 3/22*

U.S. Cl. 524—398 **9 Claims**

1. A method for improving the thermal stability of a vulcanizable elastomer of thiodiethanol which is not thermally stable which comprises incorporating therein a thermal stabilizing amount of a copper salt selected from the group consisting of cuprous chloride, cuprous bromide, cuprous sulfide, cuprous thiocyanate, cupric phosphate, cupric hydroxide, cupric sulfide, cupric carbonate and cupric salts of C_1-C_{18} monocarboxylic acids, said elastomer of thiodiethanol being represented by the formula:

$$H+OG+_nOH \qquad (I)$$

wherein +OG+ comprises a copolymer of randomly alternating structural units selected from:

(A) structural units (II) and (III)

$$+OC_2H_4SC_2H_4+ \qquad (II)$$

$$+OR+ \qquad (III)$$

wherein R represents one or more radicals remaining on removal of two hydroxyl groups from (a) aliphatic saturated linear, branched chain or cyclic diols, or (b) aliphatic linear, branched chain or cyclic diols containg external unsaturation and having an allylic hydrogen atom; and

(B) structural units (II), (III) and (IV)

$$+OR'+ \qquad (IV)$$

wherein R′ represents the radical remaining on removal of two hydroxyl groups from a diphenolic compound; said copolymer comprising structural units (A) and (B) being characterized in that (1) n is an integer sufficient to provide in said copolymer a molecular weight of at least about 8000; (2) the molar ratio of structural units (II) to (III), when the polymer comprises structural units (A), or the molar ratio of structural units (II) to the total of (III) and (IV), when the polymer comprises structural units (B), is not less than about 1:1; and (3) the polymers contain from 1 to 10 mole percent of said diol (b), based on the total of all units (II), (III) and (IV) present in said polymer.

4,374,948

HIGH NITRILE COPOLYMER LATEX COATING

Richard C. Adams, Chardon, and Steven J. Waisala, Shaker Heights, both of Ohio, assignors to The Standard Oil Company, Cleveland, Ohio

Filed May 26, 1981, Ser. No. 266,778

Int. Cl.³ C08K *5/34*

U.S. Cl. 524—516 **14 Claims**

1. A coating composition comprising (1) a water soluble polymeric thickener comprising a homopolymer or copolymer of vinyl pyrrolidone which has an intrinsic viscosity greater than 0.75 dl/gm, and (2) a latex produced by polymerization in aqueous medium of a major portion of a monounsaturated nitrile having the structure

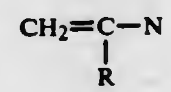

wherein R is hydrogen, a lower alkyl group having from 1 to 4 carbon atoms or a halogen, and a minor portion of at least one monovinyl monomer copolymerizable therewith optionally in the presence of a preformed diene rubber.

4,374,949

COMPOSITION AND PROCESS FOR MAKING A GREEN COLORED POLYESTER

Fred L. Massey, Uniontown, and Douglas D. Callander, Akron, both of Ohio, assignors to The Goodyear Tire & Rubber Company, Akron, Ohio

Filed Oct. 27, 1980, Ser. No. 198,071

Int. Cl.³ C08L *67/02*

U.S. Cl. 524—720 **30 Claims**

1. In a polyester article the improvement comprising:

a small amount of various color-imparting compounds contained in the polyester for imparting a green color thereto,

said compounds comprising an iron compound, a titanium catalyst, and a blue pigment, said iron compound being a preformed alpha-ferric oxide or an iron salt which is thermally decomposed during polymerization of said polyester to an alpha-ferric oxide,

the proportion of said compounds being sufficient to effect a green color.

4,374,950

ADHESIVE POLYORGANOSILOXANE COMPOSITION

Chiyuki Shimizu, Oota, Japan, assignor to Toshiba Silicone Co., Ltd., Tokyo, Japan

Filed Oct. 29, 1981, Ser. No. 316,172

Claims priority, application Japan, Oct. 29, 1980, 55/151891

Int. Cl.³ C08K *5/05*

U.S. Cl. 524—765 **12 Claims**

1. An adhesive polyorganosiloxane composition comprising:

(A) a polydiorganosiloxane end-blocked by silanol groups and having a viscosity of 100-200,000 cSt at 25° C.;

(B) an aminoxy group-containing organosilicon compound having more than 2 organoaminoxy groups per molecule on the average;

(C) an inorganic filler; and

(D) a monohydric alcohol having the formula R—OH, in which R is a primary or secondary hydrocarbon group selected from the group consisting of a monovalent saturated aliphatic hydrocarbon group and an aralkyl group, and having a vapor pressure of at least 0.1 mmHg at 20° C.

4,374,951

POLYBLENDS COMPRISING N-PHENYLMALEIMIDE COPOLYMERS AND SAN COPOLYMERS

Yoon C. Lee, deceased, late of Springfield, Mass. by Nancy J. Lee, administratrix; Gary L. Deets, and Quirino A. Trementozzi, both of Springfield, Mass., assignors to Monsanto Company, St. Louis, Mo.

Filed Sep. 11, 1981, Ser. No. 301,333

Int. Cl.³ C08L *33/24, 51/04, 25/12*

U.S. Cl. 525—73 **5 Claims**

1. A polyblend comprising:

A. a copolymer having from 40 to 55% by weight of N-phenyl maleimide, from 0 to 10% by weight of acrylonitrile and from 35 to 60% by weight of a vinylaromatic monomer; and

B. a copolymer of a vinyl aromatic monomer and from 20 to 40% by weight of acrylonitrile.

4,374,952
NITRILE RUBBER/EPDM GRAFT BLENDS
Charles D. Shedd, Naugatuck, and Allen L. Stone, Cheshire, both of Conn., assignors to Uniroyal, Inc., New York, N.Y.
Filed Jul. 14, 1980, Ser. No. 168,874
Int. Cl.^{3} C08L *9/02, 51/04*
U.S. Cl. 525—87 **15 Claims**

1. A polymer blend composition which comprises:
(A) a butadiene-acrylonitrile copolymer elastomer; and
(B) a graft polymer comprising
(1) an EPDM substrate, onto which has been grafted a superstrate which is
(2) an acrylonitrile resin,
wherein the weight ratio of (A) to (B) is about 95:5 to 5:95.

4,374,953
METHOD FOR PREPARING POLYACETALS AND POLYKETALS BY EMULSION POLYMERIZATION
Yungnien J. Chou, and John C. Saam, both of Midland, Mich., assignors to Dow Corning Corporation, Midland, Mich.
Filed Apr. 19, 1982, Ser. No. 369,690
Int. Cl.^{3} C08F *8/28;* **C08L** *61/00*
U.S. Cl. 525—153 **37 Claims**

1. A method for preparing polyacetals and polyketals by emulsion polymerization, said method comprising the steps of
(1) emulsifying in an aqueous medium a mixture comprising
(a) at least one reagent containing at least 5 carbon atoms and 2 or more hydroxyl groups or 2 or more esterified hydroxyl groups of the formula RCOO— where R is alkyl and contains from 1 to 3 carbon atoms and the hydroxyl or esterified hydroxyl groups are bonded to aliphatic or cycloaliphatic carbon atoms,
(b) at least one carbonyl compound containing at least 5 carbon atoms or a reaction product of said carbonyl compound and a water-soluble monofunctional alcohol containing from 1 to 3 carbon atoms. said carbonyl compound being selected from the group consisting of mono- and polyfunctional aldehydes and mono- and polyfunctional ketones wherein the carbonyl groups of the carbonyl compound are bonded to aliphatic or cycloaliphatic carbon atoms, and
(c) at least one polycondensation catalyst in an amount effective to accelerate the rate of reaction of (a) with (b), and
(2) thereafter allowing (a) and (b) to react until the desired product is obtained.

4,374,954
POWDER PAINT WITH EPOXY AND HYDROXY COPOLYMER AND ANHYDRIDE
Santokh S. Labana, Dearborn Heights, and Ares N. Theodore, Farmington, both of Mich., assignors to Ford Motor Company, Dearborn, Mich.
Continuation-in-part of Ser. No. 394,879, Sep. 6, 1973, abandoned. This application Feb. 24, 1975, Ser. No. 552,511
The portion of the term of this patent subsequent to Jan. 13, 1993, has been disclaimed.
Int. Cl.^{3} C08F *8/46*
U.S. Cl. 525—207 **16 Claims**

1. In a thermosettable powder paint which exclusive of pigments, antistatic agents, and plasticizers, the same being conventional non-reactive additives to a thermosettable powder paint, consists essentially of a coreactable mixture of
1. copolymer consisting essentially of about 5 to about 20 weight percent of a glycidyl ester of a monoethylenically unsaturated acid and about 80 to about 95 weight percent of other monoethylenically unsaturated monomers, and having a glass transition temperature in the range of about 40° C. to about 90° C. and a molecular weight ($\overline{M}_n$) in the range of about 1500 to about 15,000, and,
2. an anhydride crosslinking agent selected from the group consisting of
(a) monomeric anhydrides of dicarboxylic acids, and
(b) homopolymers of anhydrides of dicarboxylic acids, and
3. 0.05 to 4.0 weight percent of a non-reactive polymeric flow control agent based on the weight of said coreactable mixture and having molecular weight ($\overline{M}_n$) of at least 1000 and glass transition temperature at least 20° C. below the glass transition temperature of said copolymer,
the improvement wherein said copolymer is qualitatively difunctional and said other monoethylenically unsaturated monomers consist essentially of difunctional monomers selected from the group consisting of C_5–C_7 hydroxyalkyl acrylates and C_5–C_7 hydroxyalkyl methacrylates in an amount comprising about 2 to about 10 weight percent of said copolymer and monoethylenically unsaturated monomers consisting essentially of monofunctional monomers selected from the group consisting of esters of a C_1–C_8 monohydric alcohol and acrylic acid, esters of a C_1–C_8 monohydric alcohol and methacrylic acid and C_8–C_{12} monovinyl hydrocarbons.

4,374,955
N-BUTYL ACRYLATE POLYMER COMPOSITION FOR SOLAR CELL ENCAPSULATION AND METHOD
Amitava Gupta, Pasadena; John D. Ingham, and Andre H. Yavrouian, both of La Crescenta, all of Calif., assignors to California Institute of Technology, Pasadena, Calif.
Filed Jun. 11, 1980, Ser. No. 158,575
Int. Cl.^{3} C08L *51/00, 33/08*
U.S. Cl. 525—281 **7 Claims**

1. A polymer syrup comprising:
40% to 70% by weight of a linear, uncrosslinked poly (n-butyl) acrylate prepolymer having a molecular weight between 100,000 and 600,000 dissolved in
30% to 60% by weight of n-butyl acrylate monomer.

4,374,956
OLEFIN POLYMER MODIFIED WITH SUBSTITUTED MALEAMIC ACID
Aubert Y. Coran, and Raman Patel, both of Akron, Ohio, assignors to Monsanto Company, St. Louis, Mo.
Continuation of Ser. No. 128,611, Mar. 10, 1980, abandoned. This application Sep. 17, 1981, Ser. No. 303,304
Int. Cl.^{3} C08F *8/30*
U.S. Cl. 525—296 **12 Claims**

1. A modified olefin polymer comprising the reaction product of monoolefin polymer, about 0.1 to about 20 weight of a substituted maleamic acid of the formulas

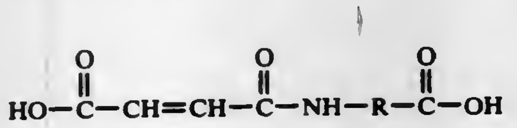
(a)

in which R is a straight or branched alkylene radical of 1-18 carbon atoms, or

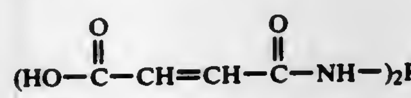
(b)

in which n is zero or one, and R' is a straight or branched alkylene radical of 2-18 carbon atoms or arylene of 6-12 carbon atoms and 0.1 to 50 parts by weight of a radical generator per 100 parts by weight of substituted maleamic acid.

4,374,957
TRIBLOCK POLYMERS OF A MONOVINYL AROMATIC COMPOUND AND MYRCENE
Roderic P. Quirk, Midland, Mich., assignor to Michigan Molecular Institute, Midland, Mich.
Filed Oct. 29, 1981, Ser. No. 316,299
Int. Cl.^{3} C08F *297/04*
U.S. Cl. 525—314 **3 Claims**

1. A solvent soluble clear thermoplastic elastomeric linear triblock polymer of a monovinyl aromatic hydrocarbon and myrcene corresponding to the general formula A-B-A in which each A is a nonelastic linear homopolymer block of a monovinyl aromatic hydrocarbon having an average molecular weight between 10,000 and 60,000 and a glass transition temperature above 70° C., B is an elastomeric homopolymeric block of myrcene having an average molecular weight between 50,000 and 200,000 and a glass transition temperature below about −40° C., and B constitutes between about 40 and about 80 percent by weight of the total, the tripolymer exhibiting tacky consistency.

4,374,958
CROSSLINKABLE COMPOSITIONS BASED ON ALKYLENE-ALKYL ACRYLATE COPOLYMERS CONTAINING A POLYOL, AN ORGANO TITANATE AND A MOLECULAR SIEVE
Austin E. Barnabeo, Bridgewater, N.J., assignor to Union Carbide Corporation, Danbury, Conn.
Filed Dec. 18, 1981, Ser. No. 332,274
Int. Cl.^{3} C08L *33/08*
U.S. Cl. 525—384 **20 Claims**

1. A crosslinkable composition comprising an alkylene-alkyl acrylate copolymer, a primary, polyhydric alcohol wherein primary hydroxyl groups are attached to non-adjacent carbon atoms in an amount sufficient to crosslink said copolymer, an organo titanate in an amount sufficient to catalyze the crosslinking reaction between the primary, polyhydric alcohol and the alkylene-alkyl acrylate copolymer and a molecular sieve in an amount sufficient to retard the crosslinking reaction.

4,374,959
BLOCK COPOLYMERS OF POLYPHENYLENE OXIDES AND NON-STERICALLY-HINDERED HIGH MOLECULAR WEIGHT AROMATIC POLYCARBONATES
George R. Loucks, Scotia, and John R. Campbell, Clifton Park, both of N.Y., assignors to General Electric Company, Schenectady, N.Y.
Division of Ser. No. 250,338, Apr. 2, 1981. This application Oct. 8, 1981, Ser. No. 309,626
Int. Cl.^{3} C08L *71/04, 69/00*
U.S. Cl. 525—394 **6 Claims**

1. A process of forming a block copolymer of polyphenylene oxide and an non-sterically-hindered high molecular weight aromatic polycarbonate comprising the following process sequence:
(1) Forming an agitated two-phase mixture comprising,
(i) an organic phase containing a polyphenylene oxide, an nonsterically hindered-aromatic dihydroxy compound, an inert organic solvent, a tertiary amine, and, optionally, a sterically hindered-aromatic dihydroxy compound,
(ii) an aqueous phase containing a solution of an alkali metal hydroxide having a pH value of at least 11,
(2) Adding and reacting a carbonyl halide with both the polyphenylene oxide and the nonsterically hindered-aromatic dihydroxy compound plus any, optional sterically hindered-aromatic dihydroxy compound, to form a block copolymer and
(3) Recovering the polyphenylene oxide and nonsterically hindered-aromatic polycarbonate block copolymer.

4,374,960
PRODUCTION OF POLYESTER FIBERS OF IMPROVED STABILITY
Ronald E. Rothwell, Colonial Heights, Va.; Hugh H. Rowan, Chapel Hill, and James J. Dunbar, Cary, both of N.C., assignors to Allied Corporation, Morris Township, Morris County, N.J.
Filed Sep. 16, 1981, Ser. No. 302,908
Int. Cl.^{3} C08G *69/48;* **C08L** *77/06*
U.S. Cl. 525—436 **7 Claims**

1. A process for the preparation of high molecular weight linear polyethylene terephthalate condensation polyesters, said polyesters being characterized by improved hydrolytic stability and by reduction in the free carboxyl content so as to have a carboxyl concentration of less than about 5 gram equivalents per 10^6 grams of polyester, the process comprising the steps of adding an end capping reagent in an amount of about 5 to 170 gram moles per 10^6 grams of polyester, wherein the end capping reagent is selected from the group consisting of N-epoxyalkylimides of dicarboxylic acids, long chain aliphatic epoxides, ethylene carbonate, diazomethane, monoglycidyl ethers, and mixtures thereof, to particles of the said linear polyester, heating the mixture to obtain a substantially homogeneous mixture of said polyester, while subjecting said mixture to extrusion and spinning for a residence time of about 5 to 10 minutes to produce monofilaments of said linear polyester of reduced free carboxyl content of less than about 5 gram equivalents per 10^6 grams of polyester.

4,374,961
METHOD FOR MANUFACTURING HEAT-STABLE POLYESTERS USING PHOSPHONIC ACID COMPOUNDS WITH CYCLIC CARBONATES AND CATALYST
Kazushige Kudo; Yoshihiro Arai, both of Joyo; Ryoichi Tsurutani, and Shun-ichi Kiriyama, both of Uji, all of Japan, assignors to Unitika Limited, Osaka, Japan
Filed May 29, 1981, Ser. No. 268,312
Claims priority, application Japan, May 9, 1980, 55-78143
Int. Cl.^{3} C08G *63/76*
U.S. Cl. 525—439 **6 Claims**

1. In a method to manufacture heat-stable polyester using cyclic carbonate compounds catalyzed with an alkali halide compound, the improvement comprising
adding a phosphonic acid compound of the structure

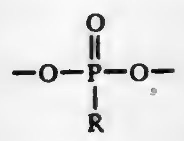

wherein R is hydrogen, a monovalent hydrocarbon group with a carbon atom number of 1-18, R_4OH, $COOR_5$, or R_6COOR_7; R_4 and R_6 are difunctional hydrocarbon groups with carbon atom numbers of 1-18; R_5 and R_7 are hydrogen, monofunctional hydrocarbon groups with carbon atom numbers of 1-18 or R_4OH.

4,374,962
ADHESIVE FOR POLYESTER FIBROUS MATERIAL
Toshihiro Yotsumoto, Higashimurayama, and Kazuo Koyama, Sayama, both of Japan, assignors to Bridgestone Tire Company Limited, Tokyo, Japan
Filed Apr. 6, 1982, Ser. No. 366,032
Claims priority, application Japan, Apr. 10, 1981, 56-52937
Int. Cl.^{3} C08G *8/20, 8/24*
U.S. Cl. 525—442 **2 Claims**

1. An adhesive for polyester fibrous material, comprising an

alkylphenol/alkylresorcin/formaldehyde cocondensate having substantially an average molecular weight of 300-600 and obtained by condensing

a compound selected from compounds represented by a general formula

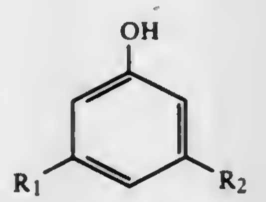

wherein R_1 represents a hydrogen atom or an alkyl group having 1–3 carbon atoms, and R_2 represents an alkyl group having 1-4 carbon atoms, and

a compound selected from compounds represented by a general formula

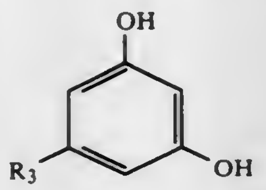

wherein R_3 represents an alkyl group having 1-3 carbon atoms, together with formaldehyde in the presence of an acidic catalyst.

4,374,963

HEAT CURABLE EPOXY-ACRYLATE COMPOSITIONS

Charles R. Morgan, Brookeville, and David R. Kyle, Columbia, both of Md., assignors to W. R. Grace & Co., New York, N.Y.

Filed Nov. 2, 1981, Ser. No. 317,648

Int. Cl.^{3} C08G *59/40, 59/68*

U.S. Cl. 525—486 4 Claims

1. A heat curable composition comprising

(a) a liquid, ethylenically unsaturated monomer, oligomer or prepolymer of the formula:

$$(CH_2{=}\underset{\underset{R}{|}}{C}{-}\overset{\overset{O}{\|}}{C}{-}O{-})_nR_1$$

wherein R is H or CH_3, R_1 is an organic moiety and n is at least 2,

(b) an epox resin containing at least two

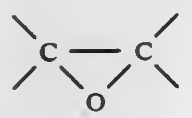

groups, and

(c) a thermal initiator member of the group consisting of

(1) a substituted or unsubstituted diaryliodonium salt in combination with a free radical initiator,

(2) a BF_3 adduct,

(3) a BF_3 adduct in combination with a free radical initiator, and

(4) dicyandiamide in combination with a free radical initiator.

4,374,964

METHOD OF PREPARING HIGH MOLECULAR WEIGHT POLYAMINES

Kenneth G. Phillips, River Forest, and Paul J. Harris, Orland Park, both of Ill., assignors to Nalco Chemical Company, Oak Brook, Ill.

Division of Ser. No. 98,454, Nov. 29, 1979, Pat. No. 4,287,331. This application May 20, 1981, Ser. No. 265,662

Int. Cl.^{3} C08G *61/12*

U.S. Cl. 525—540 4 Claims

1. An improved process for making high molecular weight polyamine comprising:

reacting, in the presence of a self-limiting neutralizing agent, an alkylene dihalide selected from the group consisting of ethylene and 1,2-propylene dihalides with a nitrogen containing compound having the structural formula

$$H_2N({-}R{-}\overset{\overset{H}{|}}{N}{-})_xH$$

where x is an integer of 0–5 and R is an alkylene radical selected from the group consisting of

$$-CH_2CH_2-,\ \text{and}\ -CH_2\underset{\underset{CH_3}{|}}{CH}-$$

to produce said polyamine and an acid by-product,

said self-limiting agent being present at the outset of the reaction in an amount sufficient to neutralize substantially all of said acid by-product produced from the reaction,

said self-limiting agent being a basic reagent with a sufficiently low, aqueous solubility and K_b for neutralizing said acid by-product as it is produced while maintaining the pH of said reaction at a generally constant alkaline value; and

reacting said polyamine with a quaternizing agent.

4,374,965

ALKALINE RESISTANT ORGANIC COATINGS FOR CORROSION SUSCEPTIBLE SUBSTRATES II

Ray A. Dickie, Birmingham, and Joseph W. Holubka, Livonia, both of Mich., assignors to Ford Motor Company, Dearborn, Mich.

Continuation of Ser. No. 938,677, Aug. 31, 1978, abandoned. This application Apr. 10, 1980, Ser. No. 139,069

Int. Cl.^{3} C08Z *63/00*

U.S. Cl. 525—510 5 Claims

1. A solvent based primer composition that retards corrosion in substantial absence of chromate corrosion inhibiting pigments which comprises an intimate admixture of film forming ingredients consisting essentially of:

(A) A substantially gel free epoxy and amine reaction product which contains no ester linkages and which is made by reacting in non-aqueous medium reactants consisting essentially of:

1. An epoxy resin reactant having two 1,2-epoxy groups per molecule which is the reaction product of bisphenol A and epichlorohydrin and has an epoxide equivalent weight range from at least about 875 to 4,000; and
2. An amine reactant selected from the group consisting of secondary monoamines having a total of up to about 20 carbons, and comprising at least about 75 mole percent hydroxy amine containing one or more hydroxy groups removed at least one carbon from the amino nitrogen in a stoichiometric amount such that the reaction product (A) comprises tertiary amino and primary and secondary hydroxy groups and is substantially free of unreacted epoxy groups;

(B) a di- or polyhydroxy compound; and

(C) An amine aldehyde resin crosslinking agent at about 5-30% by weight of the combined weight (A) and (B).

4,374,966

PROCESS FOR THE MANUFACTURE OF VINYL CHLORIDE POLYMERS BY COATING POLYMERIZATION VESSELS

Edgar Fischer, Frankfurt am Main; Johannes Brandrup, Wiesbaden, and Jürgen Weinlich, Eppstein, all of Fed. Rep. of Germany, assignors to Hoechst Aktiengesellschaft, Frankfurt am Main, Fed. Rep. of Germany

Filed Nov. 14, 1980, Ser. No. 206,960

Claims priority, application Fed. Rep. of Germany, Nov. 17, 1979, 2946461

Int. Cl.^{3} C08F *2/18, 14/06*

U.S. Cl. 526—62 3 Claims

1. A process for the manufacture of vinyl chloride homopolymers or copolymers which contain at least 50% by weight of polymerized vinyl chloride units, by polymerization of the monomer or monomer mixture in aqueous dispersion comprising radical-forming catalysts and suspension stabilizers, said process comprises carrying out the polymerization in a reactor of which internal walls thereof, and the other parts thereof on which polymer deposits can form, are provided with a compound of the general formula

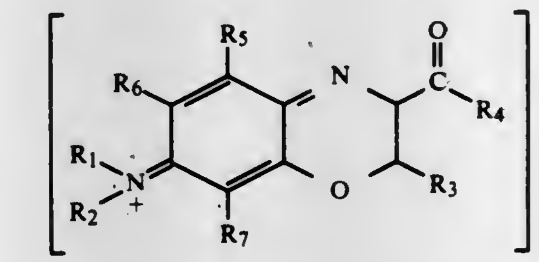 X^-

in which the individual substituents have the following meanings: R_1 to R_2 is H or a saturated hydrocarbon radical with 1-8 C-atoms; R_3 or R_4 is a saturated hydrocarbon radical with 1-8 C-atoms, OH, or

$$N\begin{matrix}\diagup R' \\ \diagdown R''\end{matrix}$$

in which R' and R" have the same meaning as for R_1 or R_2, or denote an aromatic radical with 6 to 10 carbon atoms, or R_4 denotes an O-aliphatic hydrocarbon radical with 1-6 C-atoms; or R_3 and R_4 denote $-CH_2-CH_2-CH_2-$ or

$$-\underset{\underset{H}{|}}{N}-\underset{\underset{O}{\|}}{C}-\underset{\underset{H}{|}}{N}-;$$

each of R_5, R_6, R_7 denotes H; a saturated hydrocarbon radical with 1-8 C-atoms; or an aliphatic hydrocarbon radical with 1-6 C-atoms; or R_5 and R_6 is an isocyclic or heterocyclic aromatic radical with 6 to 10 C-atoms; and X is a monovalent anion or a corresponding anion equivalent.

4,374,967

LOW TEMPERATURE SILICONE GEL

Paul L. Brown, Saginaw; Chi-Long Lee, and Myron T. Maxson, both of Midland, all of Mich., assignors to Dow Corning Corporation, Midland, Mich.

Continuation-in-part of Ser. No. 280,669, Jul. 6, 1981, abandoned. This application Feb. 8, 1982, Ser. No. 346,804

Int. Cl.^{3} C08G *77/06*

U.S. Cl. 528—15 10 Claims

1. A curable siloxane composition comprising an intimate mixture consisting essentially of:

(1) a polyorganosiloxane consisting essentially of 80 to 96.5 mol % of $(CH_3)_2SiO$, 2.0 to 10.0 mol % of $CH_3SiO_{1.5}$, 1.25 to 6.0 mol % of $(CH_3)_3SiO_{0.5}$, and 0.25 to 4.0 mol % of $(CH_3)_2(CH_2{=}CH)SiO_{0.5}$;

(2) an organohydrogensiloxane having an average of more than one silicon-bonded hydrogen atom per molecule and no more than one silicon-bonded hydrogen atom per silicon atom and organic radicals selected from the group consisting of alkyl radicals having from one to six carbon atoms per radical, phenyl and 3,3,3-trifluoropropyl, said organohydrogensiloxane providing an average of 0.2 to 5.0 moles of silicon-bonded hydrogen per mole of silicon-bonded vinyl; and

(3) a platinum catalyst.

4,374,968

METHODS OF FORMING ISOCYANATE POLYMERS

Homer C. McLaughlin, Duncan, Okla., assignor to Halliburton Company, Duncan, Okla.

Division of Ser. No. 155,714, Jun. 2, 1980, which is a division of Ser. No. 17,639, Mar. 5, 1979, Pat. No. 4,264,486. This application Aug. 13, 1981, Ser. No. 292,563

Int. Cl.^{3} C08G *18/24*

U.S. Cl. 528—54 27 Claims

1. A method of forming an isocyanate polymer using a mixture having a long gelation time greater than at least 9 minutes in the presence of some free water comprising combining an organic di- or polyisocyanate compound with an hydroxylated organic polymer and a catalyst selected from the group consisting of triethylenediamine and Group 3 and 4 metal-organic compounds.

4,374,969

ADDITION POLYMERIZABLE ISOCYANATE-POLYAMINE ANAEROBIC ADHESIVES

Kurt C. Frisch, Jr., Midland, Mich., assignor to The Dow Chemical Company, Midland, Mich.

Continuation-in-part of Ser. No. 215,997, Dec. 12, 1980, abandoned. This application Apr. 2, 1982, Ser. No. 364,830

Int. Cl.^{3} C08G *18/14*

U.S. Cl. 528—69 12 Claims

1. An adhesive comprising:

(a) the reaction product of:

(1) an addition polymerizable ethylenically unsaturated isocyanate and

(2) a polyamine, wherein the reaction between the polyamine and the isocyanate has been carried out in the absence of a catalyst; and

(b) a polymerization initiator.

4,374,970

SULFUR-MODIFIED COPOLYETHER GLYCOLS, A METHOD FOR PREPARING THEM, AND POLYURETHANES PREPARED THEREFROM

Ivan M. Robinson, Wilmington, Del., assignor to E. I. Du Pont de Nemours and Company, Wilmington, Del.

Filed Jul. 7, 1981, Ser. No. 281,202

Int. Cl.^{3} C08G *18/52;* C09K *3/00*

U.S. Cl. 528—79 12 Claims

1. A copolyether glycol modified so that it contains in its chain 1-25%, by weight, of moieties represented by the structure

$$-O-\overset{\overset{R}{|}}{CH}-CH_2-S-CH_2-\overset{\overset{R}{|}}{CH}-$$

where R is hydrogen, an alkyl radical of 1-3 carbon atoms or phenyl, and the oxygen atom is linked to a hydrogen atom or a carbon atom.

11. A polyurethane which is the reaction product of

(a) the modified copolyether glycol of claim 1, 2, 3, 4 or 5;

(b) an organic polyisocyanate; and

(c) a chain extender.

4,374,971

PROCESS FOR THE PREPARATION OF THERMOPLASTIC AROMATIC POLYPHOSPHONATES WITH IMPROVED THERMAL AGEING RESISTANCE

Manfred Schmidt, New Martinsville, Va.; Dieter Freitag, and Ludwig Bottenbruch, both of Krefeld, Fed. Rep. of Germany, assignors to Bayer Aktiengesellschaft, Leverkusen, Fed. Rep. of Germany

Filed Oct. 27, 1980, Ser. No. 201,254
Claims priority, application Fed. Rep. of Germany, Oct. 31, 1979, 2944093
Int. Cl.³ C08G *79/04*
U.S. Cl. 528—167 **7 Claims**

1. A process for the preparation of a linear or branched-chain thermoplastic aromatic polyphosphonate having an average molecular weight number average $\overline{M}_n$ in the range of from 11,000 to 200,000, which comprises solvent-free ester interchange of 97 to 100 mol of at least one diaryl phosphonate with 90 to 99 mol of at least one aromatic dihydroxy compound to obtain linear polyphosphonate, or the interchange of said diaryl phosphonate with said aromatic dihydroxy compound in the presence of from 0.01 to 3 mol %, based on 100 mol % of the diaryl phosphonate, of a triaryl phosphate or in the presence of from 0.01 to 3 mol %, based on 100 mol % of the aromatic dihydroxy compound, of an aromatic trihydroxy or tetrahydroxy compound or a mixture thereof to obtain branched polyphosphonate, provided, that the sum of branching triaryl phosphates and branching aromatic trihydroxy or tetrahydroxy compounds is not more than a total of 3 mol %, said interchange being conducted at 90°–340° C. in an oxygen-free gas atmosphere at atmospheric pressure or reduced pressure, with removal of the volatile constituents by distillation, and in the presence of a catalytic quantity of an ester interchange catalyst which comprises at least one compound taken from the group of C_1–C_{18} tetraalkyl titanates, C_2–C_4 dialkyl tin oxides, C_2–C_4-dialkyl-C_1–C_4-dialkoxy tin compounds, C_3–C_{18} tetraalkyl zirconates and C_2–C_{18} trialkyl vanadylates, antimony or bismuth salts, C_2–C_4 dialkyl stannic acid esters, C_2–C_4 trialkyl stannic acid esters, or a mixture of at least one compound from the above groups and germanium dioxide and titanium dioxide.

4,374,972

COATING SOLUTION OF POLYETHERIMIDE OLIGOMERS

Donald A. Bolon, and Thomas B. Gorczyca, both of Schenectady, N.Y., assignors to General Electric Company, Schenectady, N.Y.

Filed Aug. 26, 1981, Ser. No. 296,390
Int. Cl.³ C08G *73/10*
U.S. Cl. 528—185 **20 Claims**

1. A process for preparing a coating solution including oligomeric polyetherimides comprising:

(a) reacting at least one aromatic bis(ether anhydride of the formula:

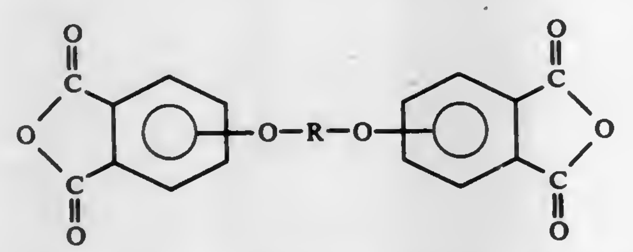

with less than a stoichometric amount of at least one diamine of the general formula:

$H_2N—R^1—NH_2$

in a suitable solvent to form oligomeric polyetheramic acids containing termanal anhydride groups

(b) heating the solution of (a) to form oligomeric polyetherimide anhydrides

(c) hydrolizing the oligomeric anhydrides of (b) to form the free acids of the formula:

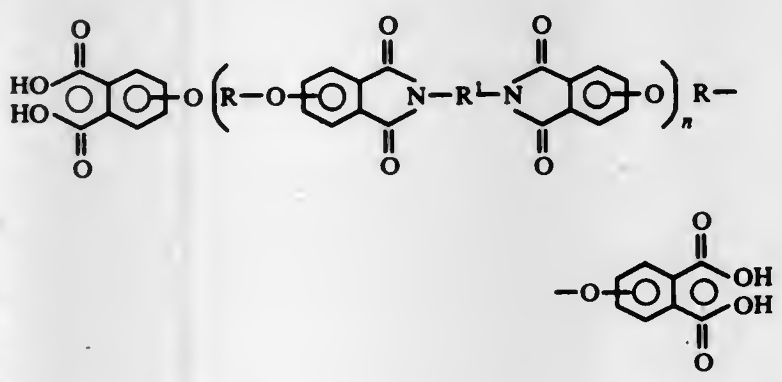

(d) adding to the oligomer solution of (c) triamines of the general formula:

$R^2(NH_2)_3$,

and more of the same or different diamine, where R is a member selected from the class consisting of (A) divalent organic radicals having the following formulas:

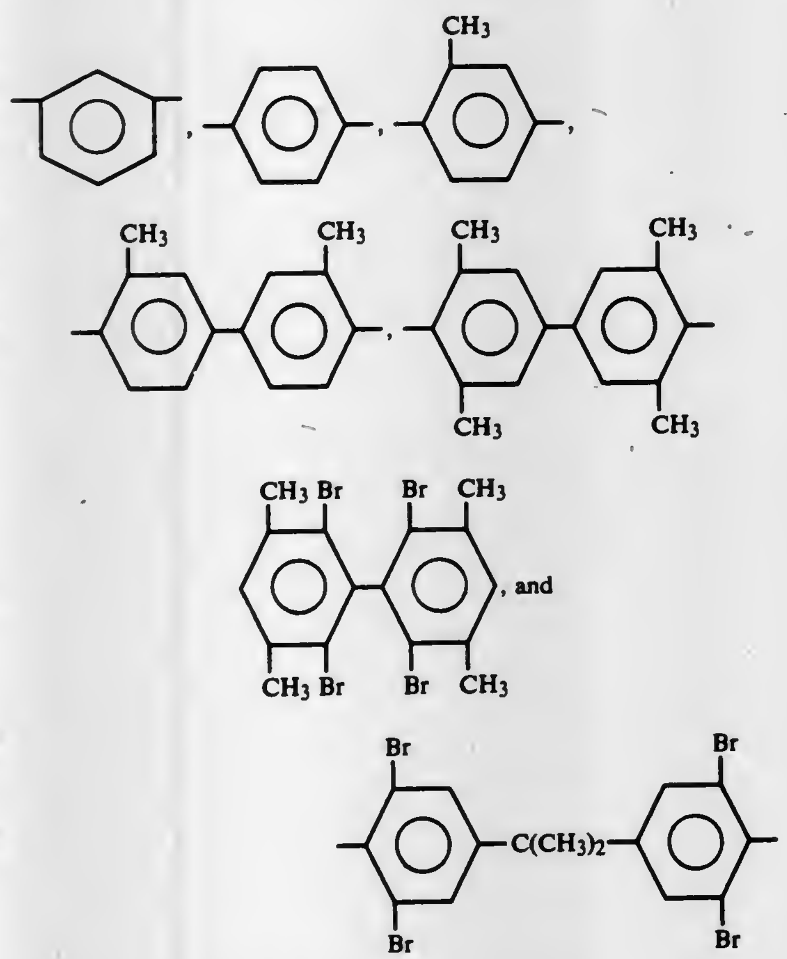

and (B) divalent organic radicals of the general formula:

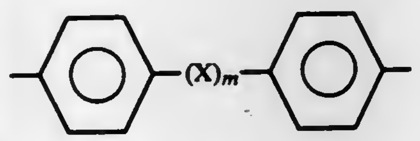

where m is 0 or 1 and X is a member selected from the class consisting of divalent radicals of the formulas,

$C_yH_{2y}—$, $—\overset{O}{\overset{\|}{C}}—$, $—\underset{\underset{O}{\|}}{\overset{O}{\overset{\|}{S}}}—$, $—O—$, $—S—$

where y is an integer from 1 to 4; R^1 is a divalent organic radical selected from the class consisting of (a) aromatic hydrocarbon radicals having from 6 to about 20 carbon atoms and haloginated derivatives thereof, (b) alkylene radicals having from 2 to about 20 carbon atoms, and cycloalkylene radicals having from 3 to about 30 carbon atoms, (c) from C_2 to about C_8 alkylene terminated polydiorganosiloxane, and (d) divalent radicals of the general formula:

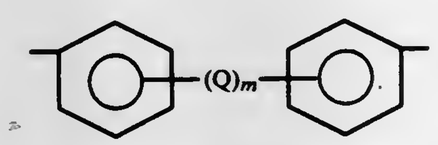

where m is as previously defined and Q is a member selected from the class consisting of

$—O—$, $—\overset{O}{\overset{\|}{C}}—$, $—\underset{\underset{O}{\|}}{\overset{O}{\overset{\|}{S}}}—$, $—S—$, $—C_xH_{2x}—$

where x is an integer from 1 to 5 inclusive, R^2 is a member selected from the class consisting of (a) the following trivalent aromatic radicals

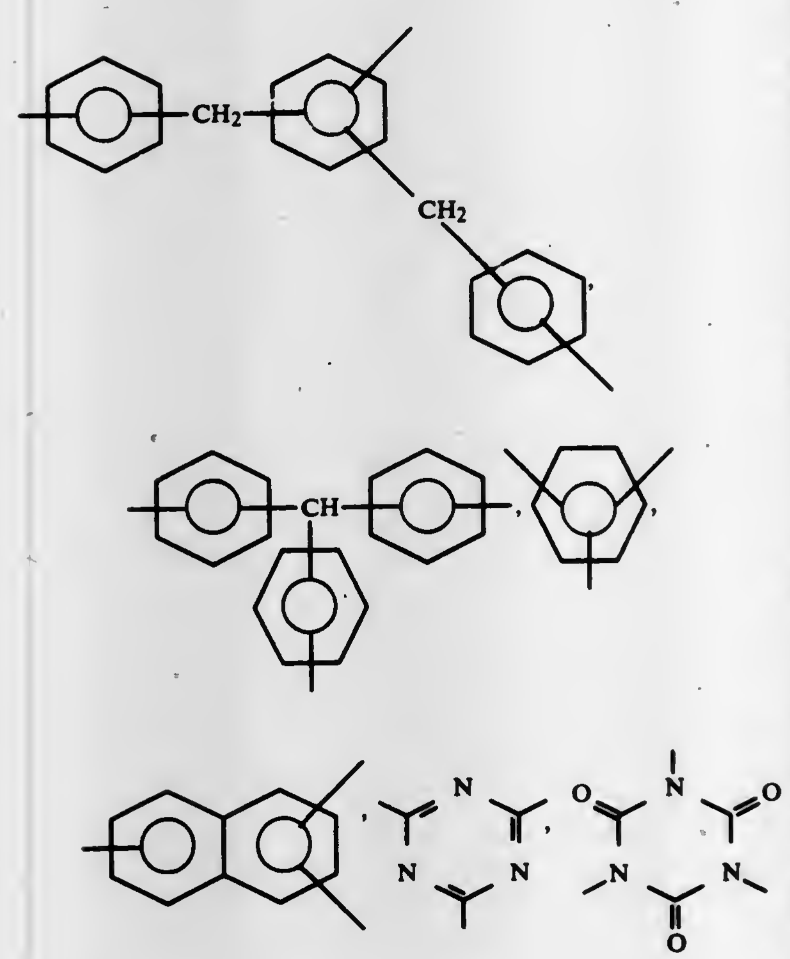

and (b) trivalent aliphatic radicals;

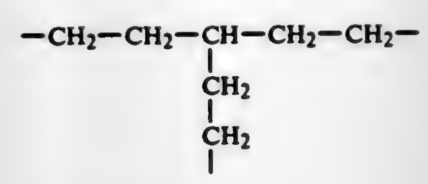

and n is an integer from 0 to 100.

4,374,973

POLYCARBONATES WITH SUPPRESSED AGING CHARACTERISTICS

Dusan C. Prevorsek, Morristown; Bruce T. DeBona, Madison, and Yali Kesten, Highland Park, all of N.J., assignors to Allied Corporation, Morris Township, Morris County, N.J.

Continuation of Ser. No. 180,716, Aug. 25, 1980, abandoned, which is a continuation of Ser. No. 965,119, Nov. 30, 1978, abandoned. This application Jul. 15, 1981, Ser. No. 283,330
Int. Cl.³ C08G *63/64, 63/62*
U.S. Cl. 528—191 **2 Claims**

1. Polycarbonate of improved age-resisting properties, consisting predominantly of bisphenol A moieties joined together by carbonate linkages, wherein the improvement consists in a content of essentially only copolymerized terephthalate moieties constituting 5 or 10 mol percent of the polymer, such that the polymer after exposure in the form of a 0.125 inch thick plate to temperature of 120° C. for at least 90 hours retains Izod impact resistance at room temperature, as measured by ASTM test D256 of at least 9 ft.-lbs. per inch of notch.

4,374,974

METHOD FOR MAKING POLYFORMALS AND POLYFORMAL PRODUCTS MADE THEREBY

Allan S. Hay, Schenectady, N.Y., assignor to General Electric Company, Schenectady, N.Y.

Continuation of Ser. No. 889,393, Mar. 23, 1978, abandoned. This application Nov. 6, 1978, Ser. No. 958,040
Int. Cl.³ C08G *65/40*
U.S. Cl. 528—219 **22 Claims**

1. A method for making a polyformal resin having an intrinsic viscosity of greater than 0.3 in chloroform at 25° C. and capable of being compression molded to a flexible film, which comprises

(1) agitating a mixture containing as essential ingredients, methylene halide, bisphenol, alkali metal hydroxide and a member selected from the class consisting of a phase transfer catalyst and a dipolar aprotic solvent, and

(2) recovering the polyformal from the mixture of (1),

where there is utilized in the reaction mixture per mole of bisphenol, more than 1 mole of methylene halide and greater than 2 moles of alkali metal hydroxide.

4,374,975

PROCESS FOR THE PRODUCTION OF HIGH MOLECULAR WEIGHT POLYESTER

Ben Duh, Tallmadge, Ohio, assignor to The Goodyear Tire & Rubber Company, Akron, Ohio

Filed Feb. 2, 1982, Ser. No. 345,172
Int. Cl.³ C08G *63/70*
U.S. Cl. 528—272 **3 Claims**

1. In a process for the continuous solid state polymerization of crystalline linear polyester prepolymer wherein the crystalline polyester is further polymerized, the improvement comprising introducing a crystalline linear polyester prepolymer having an appreciable moisture content to a single moving bed reaction zone, countercurrently contacting said polyester within the reaction zone with a heated inert gas wherein the temperature of the crystalline polyester is increased from about 170° C. to its polymerization temperature of about 200° C. to

225° C. whereby said polyester is further polymerized in its crystalline form without severe degradation of the polyester.

4,374,976
PROCESS FOR THE PRODUCTION OF POLYAMIDE SILICATE RESINOUS PRODUCTS
David H. Blount, 5450 Lea St., San Diego, Calif. 92105
Division of Ser. No. 130,015, Mar. 13, 1980, Pat. No. 4,291,154, which is a continuation-in-part of Ser. No. 908,106, May 22, 1978, Pat. No. 4,198,491, which is a continuation-in-part of Ser. No. 845,464, Oct. 25, 1977, Pat. No. 4,120,937. This application Aug. 18, 1981, Ser. No. 293,874
Int. Cl.³ C08G *69/26*
U.S. Cl. 528—339.5 **10 Claims**

1. The process for the production of polyamide silicate resinous product modified with vegetable oil by mixing and reacting the following components:
(a) halosilicon acids, 0.5 to 1 mol, produced by reacting 0.5 to 2 mols of hydrated silica compound with 1 mol of a silicon halide; the mols of halosilicon acid are based on the mols of silicon halide used;
(b) organic polyamine, 1 to 2 mols;
(c) polycarboxylic acid, polycarboxylic acid anhydride or mixtures thereof, in a total amount of 1 to 2 mols;
(d) vegetable oil, in an amount wherein a portion of the polycarboxylic acid or polycarboxylic acid anhydride is replaced with a vegetable oil.

4,374,977
POLY-P-PHENYLENE-TEREPHTHALAMIDE FIBERS EXCELLENT IN FATIGUE RESISTANCE AND PROCESS FOR PREPARATION THEREOF
Takashi Fujiwara, Miyazaki; Shuji Kajita, Osaka; Tetsuo Matsushita, Miyazaki, and Seiichi Manabe, Osaka, all of Japan, assignors to Asahi Kasei Kogyo Kabushiki Kaisha, Japan
Filed Mar. 11, 1980, Ser. No. 129,403
Claims priority, application Japan, Mar. 13, 1979, 54-29116
Int. Cl.³ C08G *69/46*
U.S. Cl. 528—348 **9 Claims**

1. A fiber excellent in fatigue resistance, consisting essentially of poly-p-phenylene-terephthalamide, wherein the tangential refractive index (TRIv) of the fiber by polarized light vibrating in the direction perpendicular to the fiber axis is in the range of from 0 to 0.07, the tangential refractive index (TRIp) of the fiber by polarized light vibrating in the direction parallel to the fiber axis is in the range of from −0.06 to −0.005, the central refractive index (Nvo) of the fiber by polarized light vibrating in the direction perpendicular to the fiber axis and the X-ray diffraction intensity ratio (RIX) are in the range satisfying the conditions of the formulae (1) through (4):

$$Nvo \geqq -0.08(RIX)+1.672 \quad (1)$$

$$Nvo \leqq 1.700 \quad (2)$$

$$RIX \geqq 0.85 \quad (3)$$

$$RIX \leqq 1.20 \quad (4)$$

and the apparent crystallite size (ACS in A) of the fiber and the orientation angle (OA in degrees) of the fiber are in the range circumscribed by the four lines (a), (b), (c), and (d) defined by the formulae (5) through (8) as illustrated in FIG. 1:

$$OA \geqq 0.04(ACS)+16 \quad (5)$$

$$OA \geqq 2(ACS)-160 \quad (6)$$

$$OA \leqq 0.04(ACS)+26 \quad (7)$$

$$OA \leqq 2(ACS)-82 \quad (8).$$

4,374,978
HIGH YOUNG'S MODULUS POLY-P-PHENYLENE TEREPHTHALAMIDE FIBER
Takashi Fujiwara, Miyazaki; Shuji Kajita, Osaka; Tetsuo Matsushita, Miyazaki, and Seiichi Manabe, Osaka, all of Japan, assignors to Asahi Kasei Kogyo Kabushiki Kaisha, Japan
Filed Mar. 11, 1980, Ser. No. 129,404
Claims priority, application Japan, Mar. 13, 1979, 54-29115
Int. Cl.³ C08G *69/46*
U.S. Cl. 528—348 **9 Claims**

1. A high Young's modulus fiber consisting essentially of poly-p-phenylene-terephthalamide wherein the tangential refractive index (TRIv) of the fiber by polarized light vibrating in the direction perpendicular to the fiber axis is in the range of from 0.06 to 0.10, the tangential refractive index (TRIp) of the fiber by polarized light vibrating in the direction parallel to the fiber axis is in the range of from −0.020 to +0.020, the central refractive index (Nvo) of the fiber by polarized light vibrating in the direction perpendicular to the fiber axis and the X-ray diffraction intensity ratio (RIX) are in the range satisfying the conditions of the formulae (1) through (4):

$$Nvo \geqq -0.08(RIX)+1.670 \quad (1)$$

$$Nvo \leqq 1.640 \quad (2)$$

$$RIX \geqq 0.85 \quad (3)$$

$$RIX \leqq 1.10 \quad (4),$$

and the apparent crystallite size (ACS in A) of the fiber and the orientation angle (OA in degrees) of the fiber are in the range circumscribed by the four lines (a), (b), (c), and (d) defined by the formulae (5) through (8) as illustrated in FIG. 1:

$$OA \geqq 0.10\,(ACS)+4.8 \quad (5)$$

$$OA \geqq 0.40\,(ACS)-19.8 \quad (6)$$

$$OA \leqq 0.05\,(ACS)+13.3 \quad (7)$$

$$OA \leqq 3\,(ACS)-146 \quad (8).$$

4,374,979
REGIOSPECIFIC SYNTHESIS OF ANTHRACYCLINONE COMPOUNDS SUCH AS DAUNOMYCINONE
Lester A. Mitscher, Lawrence, Kans., assignor to The University of Kansas Endowment Association, Lawrence, Kans.
Filed Apr. 27, 1981, Ser. No. 258,193
Int. Cl.³ C07H *15/24*; C07C *49/72, 49/74, 49/84*
U.S. Cl. 536—6.4 **10 Claims**

1. A process for synthesizing asymmetric anthracyclinones which comprises:
(a) brominating a 5,8-dimethoxy-α-tetralone to yield a 7-bromo-5,8 dimethoxy-α-tetralone as substantially the only isomer,
(b) transposing the 1-keto group of said 7-bromo-5,8-dimethoxy-α-tetralone to the 2-position to yield the corresponding β-tetralone;
(c) protecting said transposed keto group,
(d) lithiating said protected β-tetralone,
(e) reacting said lithiated compound with a phthalate ester, and
(f) cyclizing said conjugate to yield an anthracyclinone.

4,374,980
3'-DEAMINO-3'-MORPHOLINO CARMINOMYCIN
Hamao Umezawa; Tomio Takeuchi; Kuniaki Tatsuta, all of Tokyo, and Yoshikazu Takahashi, Tama, all of Japan, assignors to Zaidan Hojin Biseibutsu Kagaku Kenkyu Kai, Tokyo, Japan
Filed Mar. 15, 1982, Ser. No. 357,970
Claims priority, application Japan, Mar. 27, 1981, 56-44159
Int. Cl.³ A61K *31/71*; C07H *15/24*
U.S. Cl. 536—6.4 **2 Claims**

1. The anthracycline glycoside 3'-deamino-3'-morpholino-carminomycin of the formula

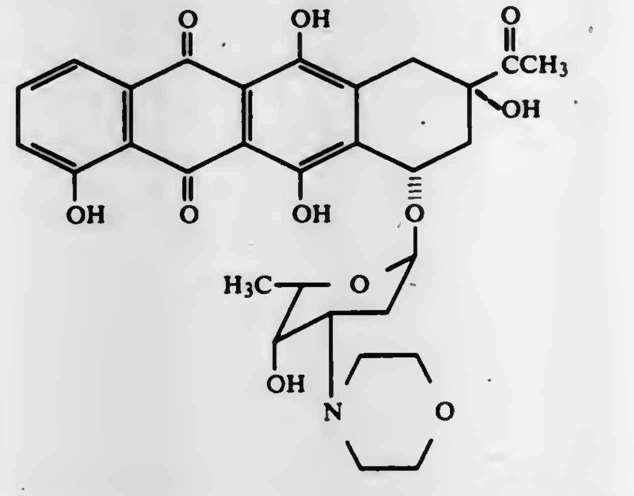

Ia

or a pharmaceutically acceptable acid addition salt thereof.

4,374,981
ULTRAFILTRATION OF FERMENTATION BROTH CONTAINING NUCLEOSIDES TO SEPARATE INOSINE AND GUANOSINE FROM THE BROTH
Masahiko Tsuda, Kobe; Kazuhiko Ohta, Ikeda, and Kiyoshi Nara, Kyoto, all of Japan, assignors to Takeda Chemical Industries, Ltd., Osaka, Japan
Filed Nov. 20, 1981, Ser. No. 323,705
Claims priority, application Japan, Nov. 27, 1980, 55-167667
Int. Cl.³ C07H *17/00, 19/06*
U.S. Cl. 536—24 **2 Claims**

1. A process for separating inosine, guanosine or their mixture from a fermentation broth, which comprises heat-treating said fermentation broth at 90° to 110° C., followed by subjecting thus-heated fermentation broth to ultrafiltration.

4,374,982
CEPHAM COMPOUNDS
Robert L. Cundall, State College, Pa., and Derek Walker, Jamesville, N.Y., assignors to Bristol-Myers Company, New York, N.Y.
Division of Ser. No. 92,248, Nov. 7, 1979, Pat. No. 4,310,459, which is a division of Ser. No. 893,092, Apr. 3, 1978, Pat. No. 4,322,347. This application Aug. 3, 1981, Ser. No. 290,744
Int. Cl.³ C07D *501/04*; A61K *31/545*
U.S. Cl. 544—16 **3 Claims**

1. A compound of the formula

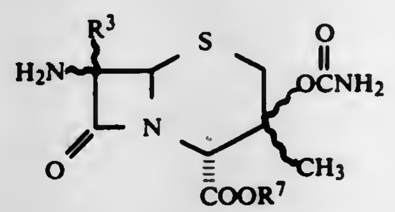

in which R^3 is hydrogen, (lower)alkoxy or (lower)alkylthio, and $COOR^7$ is carboxyl or a conventionally protected carboxyl group.

4,374,983
INTERMEDIATES FOR USE IN THE PREPARATION OF CEPHALOSPORIN ANTIBIOTICS
John M. Robinson, Ruislip, England, assignor to Glaxo Group Limited, England
Continuation of Ser. No. 152,85 3, May 23, 1980, abandoned. This application Mar. 3, 1981, Ser. No. 240,104
Claims priority, application United Kingdom, May 25, 1979, 7918428
Int. Cl.³ C07D *501/18*; A61K *31/545*
U.S. Cl. 544—24 **1 Claim**

1. (6R,7R)-7-amino-3-(1-pyridiniummethyl)ceph-3-em-4-carboxylic acid monoperchlorate.

4,374,984
AROMATIC-ALIPHATIC KETONES USEFUL AS PHOTOINITIATORS
Jürgen Eichler, Welterstadt; Claus Herz, Heidelberg; Karl-Heinz Neisius, and Gregor Wehner, both of Darmstadt, all of Fed. Rep. of Germany, assignors to Merck Patent Gesellschaft mit Beschrankter Haftung, Darmstadt, Fed. Rep. of Germany
Filed Mar. 4, 1981, Ser. No. 240,439
Claims priority, application Fed. Rep. of Germany, Mar. 5, 1980, 3008411
Int. Cl.³ C07D *219/06, 413/06, 413/14*
U.S. Cl. 544—80 **3 Claims**

1. A compound of the formula

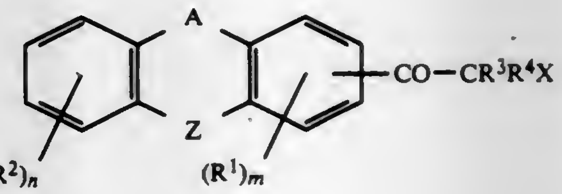

wherein
A is —CO— or —CO—CO—;
X is —OR^5; with R^3, is —O—CH(R^{10})—,
Z is —NR^{12}—;
m is 0 or an integer of 1 to 3;
n is 0 or an integer of 1 to 3;
R^1 is alkyl of 1-12 C atoms, cycloalkyl of 5-6 C atoms, aryl of 6-14 C atoms, aralkyl of 7-9 C atoms, —OH, —OAlk, —OAr, —SAlk, —SCH_2CH_2OH, —SAr, —SO_2Alk, —SO_2phenyl, —SO_2NH_2, —SO_2NHalk, —$SO_2N(Alk)_2$, —COOAlk, —NH_2, —NHAlk, —$N(Alk)_2$, —NHCOphenyl, —CN or halogen;
R^2 can be any of the groups defined for R^1 or another —CO—CR^3R^4X group;
R^3 is H, alkyl of 1-8 C atoms, or alkyl of 1-8 C atoms substituted by —OH, —OAlk, acyloxy of 2-8 C atoms, —NR^8R^9, —COOAlk or —CN, or is alkenyl of 3-5 C atoms
R^4 can be any of the groups defined for R^3 or —$CH_2CH_2R^{13}$;
R^5 is H, alkyl of 1-12 C atoms, or alkyl of 1-8 C atoms substituted by —Cl, —Br, —OH, —OAlk, —SAlk, acyloxy of 2-8 C atoms, —COOAlk, —CONHAlk, —$CON(Alk)_2$ or —CN, or is alkenyl of 3-5 C atoms, or cyclohexyl;
R^8 is alkyl of 1-12 C atoms, or alkyl or 2-4 C atoms substituted by —OH, —OAlk or —CN, or is alkenyl of 3-5 C atoms or, cyclohexyl;
R^9 is alkyl of 1-12 C atoms, or alkyl of 2-4 C atoms substituted by —OH, —OAlk or —CN, or is alkenyl of 3-5 C atoms or, cyclohexyl, or, together with R^8, is alkylene of 4-5 C atoms or C_{4-5}-alkylene interrupted by —O— or —NR^{14}—, or, together with R^4, is alkylene of 1-9 C atoms, or oxaor aza-alkylene of 2-3 C atoms;
R^{12} is H, alkyl of 1-4 C atoms or cycloalkyl of 5-6 C atoms;
R^{13} is —$CONH_2$, —CONHAlk, —$CON(Alk)_2$,

R^{14} is alkyl of 1–4 C atoms,
Alk is alkyl of 1–4 C atoms; and
Ar is C_{6-14} aryl or aryl substituted by alkyl groups and having a total of 6–14 C atoms;
wherein aryl stands for hydrocarbon aryl groups and acyl groups are derived from hydrocarbon carboxylic acids.

4,374,985
HYDRATED ALKALI METAL DICHLOROISOCYANURATE AND ITS PRODUCTION
David F. Doonan, Lake Charles, and Noel N. Coe, Westlake, both of La., assignors to Olin Corporation, New Haven, Conn.
Filed Apr. 5, 1979, Ser. No. 27,349
Int. Cl.³ C07D *251/36*
U.S. Cl. 544—190 **26 Claims**

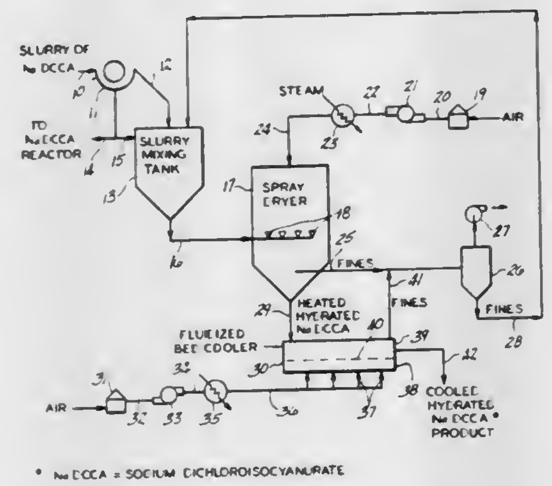

1. A process for preparing dry cooled porous particles of hydrated alkali metal dichloroisocyanurate which comprises:
a. spraying droplets of an aqueous slurry of solid alkali metal dichloroisocyanurate into an evaporation zone fed with a moving stream of gas heated to a temperature sufficiently high to evaporate free water from the droplets and form from said droplets heated porous solid spherical particles of hydrated alkali metal dichloroisocyanurate containing from about 7 to about 14 percent by weight of water of hydration,
b. fluidizing said heated particles in a cooling fluidizing gas until said particles are cooled to a temperature below about 50° C., and
c. recovering the resulting dry cooled porous solid spherical particles of hydrated alkali metal dichloroisocyanurate produced thereby.

4,374,986
SELECTED SILOXANE ADDUCTS OF TRIS(2-HYDROXYETHYL)ISOCYANURATE
Jacqueline M. Renner, New Haven; Robert N. Scott, Wallingford, and David F. Gavin, Cheshire, all of Conn., assignors to Olin Corporation, New Haven, Conn.
Filed Aug. 3, 1981, Ser. No. 289,667
Int. Cl.³ C07D *251/34*
U.S. Cl. 544—221 **6 Claims**

1. A compound of the formula:

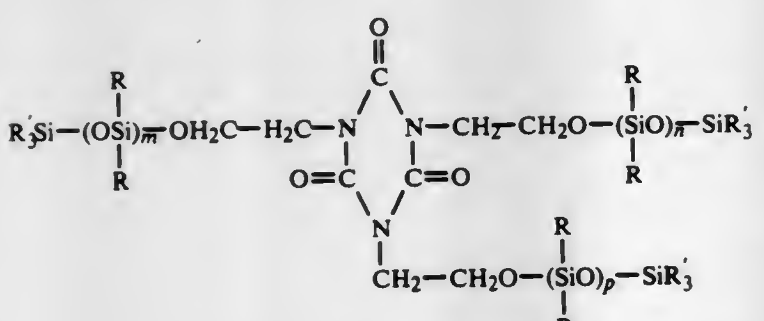

wherein each R and R′ is individually selected from lower alkyl groups having 1 to 4 carbon atoms and lower alkoxy groups having 1 to 4 carbon atoms; and the sum of m, n and p is from 0 to about 20; with the proviso that R′ is a lower alkoxy group when the sum of m, n, and p is 0.

4,374,987
PROCESS FOR THE PREPARATION OF HIGH PURITY METHOTREXATE AND DERIVATIVES THEREOF
Balwant Singh, Stamford, and Frederic C. Schaefer, Darien, both of Conn., assignors to American Cyanamid Company, Stamford, Conn.
Filed Aug. 14, 1980, Ser. No. 178,070
Int. Cl.³ C07D *475/08*
U.S. Cl. 544—260 **2 Claims**

1. A process for preparing a compound of the formula

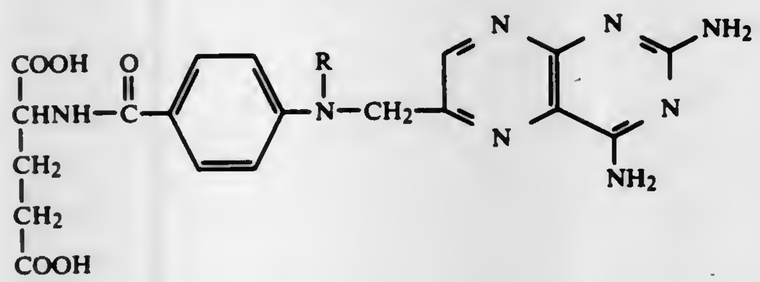

wherein R is hydrogen or C_1 to C_4 alkyl which comprises simultaneously reacting 2,4,5,6-tetraaminopyrimidine sulfate and 1,1,3-tribromoacetone with a salt of the formula

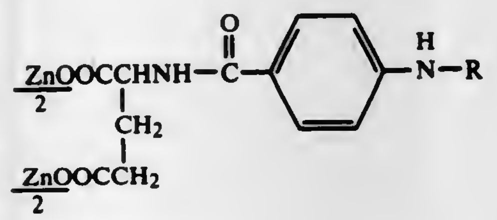

in water at a temperature of about 30° to about 60° C. and a pH of about 1.5 to about 3.5; adjusting the pH of the reaction mixture with ammonium hydroxide to a pH of from about 9 to about 10; lowering the pH of the filtrate to about pH 6.0 with hydrochloric acid to precipitate the zinc salt; filtering and water-washing the resultant precipitate; reslurrying said precipitate in water and adjusting the pH of the slurry to about pH 1.5 with hydrochloric acid, filtering and water-washing the resultant precipitate; dispersing the filtered and water-washed precipitate in water and adjusting the pH of the solution of pH of about 10 with sodium hydroxide; acidifying the solution to a pH of about 1.5 with hydrochloric acid; water-washing the resultant precipitate; redissolving said precipitate in water and adjusting the pH of the solution to about pH 10 with sodium hydroxide; diluting the solution with acetone and dissolving the precipitate in water; and acidifying to a pH of about pH 4.0 with sulfuric acid.

4,374,988
4-HETEROARYLIMIDAZO-[1,5-A]PYRIMIDINES
John P. Dusza, and Jay D. Albright, both of Nanuet, N.Y., assignors to American Cyanamid Company, Stamford, Conn.
Filed Nov. 5, 1981, Ser. No. 318,611
Int. Cl.³ C07D *521/00;* A61K *31/505*
U.S. Cl. 544—281 **16 Claims**

1. Compounds having the formula

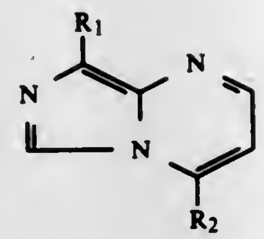

wherein R_1 is selected from the class consisting essentially of hydrogen, chloro, bromo, cyano (—CN), carbamoyl (—CO—NH_2), carboxyl (—COOH), and lower alkoxycarbonyl (—CO—O—R_3, where R_3 is a lower alkyl radical having 1–4 carbon atoms), and wherein R_2 is a monovalent radical selected from the class consisting essentially of furyl, thienyl, 3-pyridyl and 3-pyridyl-N-oxide, either of said pyridyl radicals optionally being substituted with an alkyl radical having from 1 to 4 carbon atoms.

4,374,989
PROCESS FOR THE MANUFACTURE OF DIANTHRAQUINONYL-N,N′-DIHYDROAZINE
Athanassios Tzikas, Pratteln, Switzerland, assignor to Ciba-Geigy AG, Basel, Switzerland
Continuation of Ser. No. 149,125, May 8, 1980, abandoned, which is a continuation of Ser. No. 33,406, Apr. 6, 1979, abandoned. This application Aug. 18, 1981, Ser. No. 293,985
Claims priority, application Switzerland, May 8, 1978, 4960/78
Int. Cl.³ C09B *5/48*
U.S. Cl. 544—339 **11 Claims**

1. A one-batch process for the manufacture of dianthraquinonyl-N,N′-dihydroazine, which comprises reacting 1-nitroanthraquinone in a mixture of (a) water or a mixture of water and at least one alcohol and (b) an alkali metal hydroxide or a mixture of alkali metal hydroxides at a temperature of between room temperature and the boiling temperature of the reaction mixture with hydrazine, hydrazine hydrate, methyl hydrazine, ethyl hydrazine, phenyl hydrazine, hydrazinium chloride, hydrazinium dichloride, hydrazinium sulfate, hydrazinium bromide, benzenesulfonyl hydrazine, hydroxylamine, hydroxylamine hydrochloride, hydroxylammonium sulfate or hydroxylamine sulfonic acid, subsequently removing any alcoholic constituents present from the reaction mixture, adding to the reaction mixture dimethyl sulfoxide or dimethyl sulfoxide and a further amount of alkali metal hydroxide, and bringing the reaction to completion at a temperature between 80° and 140° C.

4,374,990
CYCLIC DIAMINE DERIVATIVES
Rolf-Ortwin Weber, Wiesbaden; Alfons Söder, Frankfurt am Main, and Istvan Boksay, Kiedrich, all of Fed. Rep. of Germany, assignors to Hoechst Aktiengesellschaft, Frankfurt, Fed. Rep. of Germany
Continuation of Ser. No. 307,406, Nov. 17, 1972, abandoned. This application Oct. 26, 1979, Ser. No. 88,338
Claims priority, application Fed. Rep. of Germany, Nov. 19, 1971, 2157424; Aug. 18, 1972, 2240665
The portion of the term of this patent subsequent to Sep. 19, 1995, has been disclaimed.
Int. Cl.³ C07D *405/02;* A61K *31/495*
U.S. Cl. 544—376 **14 Claims**

1. A compound of the formula:

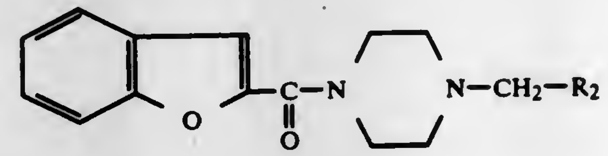

wherein R_2 is phenyl or phenyl substituted with halogen, trifluoromethyl or alkyl of 1 to 6 carbon atoms.

4,374,991
2,6-DIMETHYLPIPERIDINYL-N-CARBOBUTOXYMETHYL UREA
Joel R. Smolanoff, Chalfont, Pa., assignor to Rohm and Haas Company, Philadelphia, Pa.
Division of Ser. No. 29,491, Apr. 12, 1979, abandoned, which is a continuation-in-part of Ser. No. 839,159, Oct. 3, 1977, abandoned, which is a continuation-in-part of Ser. No. 751,932, Dec. 17, 1976, abandoned. This application Dec. 29, 1981, Ser. No. 221,091
Int. Cl.³ C07D *211/30*
U.S. Cl. 546—245 **1 Claim**

1. A compound named 2,6-dimethylpiperidinyl-N-carbobutoxymethyl urea.

4,374,992
CERTAIN ARYLALIPHATICTHIO-PYRIDINE TYPE COMPOUNDS
Roger Crossley, Reading, England, assignor to John Wyeth and Brother Limited, Maidenhead, England
Division of Ser. No. 170,366, Jul. 21, 1980, Pat. No. 4,304,701, which is a continuation-in-part of Ser. No. 98,420, Nov. 29, 1979, abandoned. This application Jul. 27, 1981, Ser. No. 286,830
Claims priority, application United Kingdom, Nov. 30, 1978, 46722/78
Int. Cl.³ C07D *13/30, 213/48, 213/51*
U.S. Cl. 546—298 **4 Claims**

1. A compound of formula:

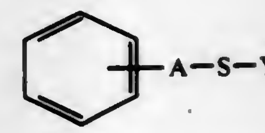

wherein A represents saturated or unsaturated alkylene radical having from 1 to 6 carbon atoms, which may be substituted by lower alkyl of 1 to 6 carbon atoms, oxo or hydroxy, S is sulphur and Y is a radical of formula:

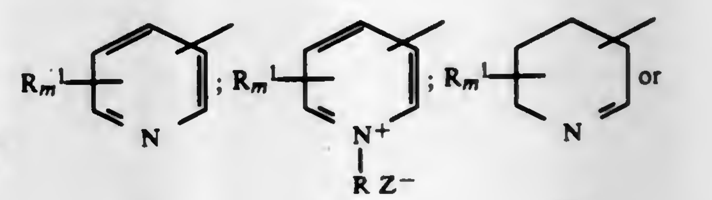

II III IIa

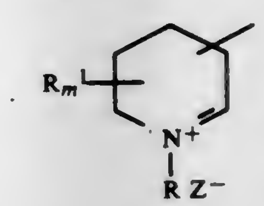

IIIa

wherein R^1 is hydroxyloweralkyl, loweralkoxyloweralkyl, formyl or acetal, $CH(OR^4)_2$ where R^4 is lower alkyl or two R^4 radicals are joined to form a lower alkylene chain, m is 1 or 2, R is lower alkyl of 1 to 4 carbon atoms or aralkyl of 7 to 12 carbon atoms, and Z^- is a pharmaceutically acceptable anion, or a pharmaceutically acceptable acid addition salt of a compound containing a radical of formula IV or IIa.

4,374,993

PROCESS FOR THE PREPARATION OF THE SULFATE SALT OF 2-AMINO-5-ALKYLTHIO-1,3,4-THIADIAZOLES

Kim S. Chamberlin, Kingsport, Tenn., assignor to Eastman Kodak Company, Rochester, N.Y.

Filed Jun. 8, 1981, Ser. No. 271,323

Int. Cl.³ C07D *285/12*

U.S. Cl. 548—141 **8 Claims**

1. Process for the preparation of a sulfate salt of a 2-amino-5-alkylthio-1,3,4-thiadiazole, which comprises adding a dialkylsulfate to a mixture of 2,5-dithiobiurea and water.

4,374,994

PROCESS FOR PREPARATION OF 5-MERCAPTOTETRAZOLYL-1-ACETIC ACID

Gary M. F. Lim, and Masaki Endo, both of Candiac, Canada, assignors to Bristol-Myers Company, New York, N.Y.

Filed Jul. 5, 1979, Ser. No. 54,743

Int. Cl.³ C07D *257/04*

U.S. Cl. 548—251 **1 Claim**

1. The process for the production of an alkaline solution of 5-mercaptotetrazolyl-1-acetic acid which consists of the consecutive steps of

(a) heating at a temperature between 50° C. and 100° C. a solution in chloroform or carbon tetrachloride of tetrazolyl-1-acetic acid with enough added acetic acid to bring the tetrazolyl-1-acetic acid into solution and twice as many moles of bromine as of tetrazolyl-1-acetic acid to produce 5-bromotetrazolyl-1-acetic acid,

(b) precipitating said 5-bromotetrazolyl-1-acetic acid as a solid by addition of a nonsolvent therefor which is a liquid alkane or a mixture of liquid alkanes,

(c) recovering said solid 5-bromotetrazolyl-1-acetic acid and heating it to reflux in a lower aliphatic alcohol in the presence of an amount of thiourea which is equimolar to the 5-bromotetrazolyl-1-acetic acid and then

(d) mixing with the resulting mixture dilute, aqueous sodium hydroxide or potassium hydroxide with stirring at room temperature to produce an alkaline solution of 5-mercaptotetrazolyl-1-acetic acid.

4,374,995

PROCESS FOR THE PRODUCTION OF TRYPTOPHANE-HYDANTOIN

Axel Kleemann, and Marc Samson, both of Hanau, Fed. Rep. of Germany, assignors to Degussa Aktiengesellschaft, Frankfurt, Fed. Rep. of Germany

Filed Nov. 10, 1981, Ser. No. 320,128

Claims priority, application Fed. Rep. of Germany, Nov. 15, 1980, 3043259

Int. Cl.³ C07D *233/30*

U.S. Cl. 548—309 **10 Claims**

1. A process of preparing tryptophane hydantoin comprising

(a) reacting a compound of formula

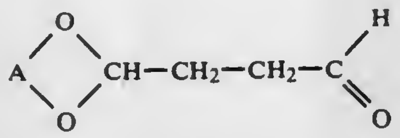

(I)

where A is an alkylene group having 2 or 3 carbon atoms or such an alkylene group substituted by 1 to 2 methyl groups in aqueous or aqueous-alcoholic solution with hydrogen cyanide or a cyanide ion supplying compound, ammonia or an ammonium ion supplying compound and carbon dioxide or a carbonate ion supplying compound and

(b) reacting the reaction mixture obtained with phenyl hydrazine at a pH between 0.1 and 4.

4,374,996

DISULFIDE INTERMEDIATE FOR CIMETIDINE

Clifford S. Labaw, Philadelphia, and George R. Wellman, Wayne, both of Pa., assignors to SK & F Lab Co., Carolina, P.R.

Filed Jun. 3, 1981, Ser. No. 270,076

Int. Cl.³ C07D *233/64*

U.S. Cl. 548—342 **1 Claim**

1. N-cyano-N'-methyl-N''-[2-(5-methyl-4-imidazolylmethyldithio)ethyl]guanidine.

4,374,997

PROCESS FOR THE PREPARATION OF ZOMEPIRAC AND RELATED COMPOUNDS

James B. Doherty, New Milford, and Debra L. Allison, Scotch Plains, both of N.J., assignors to Merck & Co., Inc., Rahway, N.J.

Filed Jun. 4, 1981, Ser. No. 270,317

Int. Cl.³ C07D *207/337, 207/31*

U.S. Cl. 548—539 **9 Claims**

1. A process for preparing Zomepirac and its analogs of the structural formula:

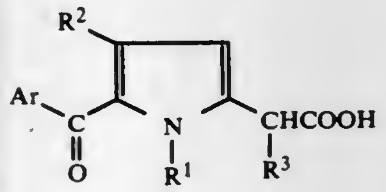

(I)

wherein Ar is phenyl or halophenyl; R^1 and R^3 independently are H or C_{1-6}alkyl and R^2 is H, C_{1-6}alkyl or halo comprising decarboxylating a diacid derivative of the structural formula:

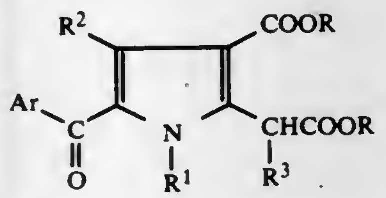

(II)

wherein R^1, R^2 and R^3 are as previously defined; and R is H, t-butyl, or benzhydryl in an acid or in an inert solvent containing the acid.

4,374,998

ALIPHATIC BRANCHED OLEFIN DIOXOLANES

Richard M. Boden, Monmouth Beach, N.J., assignor to International Flavors & Fragrances Inc., New York, N.Y.

Continuation-in-part of Ser. No. 212,993, Dec. 4, 1980, Pat. No. 4,315,952. This application Dec. 10, 1981, Ser. No. 329,216

Int. Cl.³ C07D *317/12*

U.S. Cl. 549—430 **6 Claims**

1. A dioxolane, oxathiolane or dithiolane compound defined according to the structure:

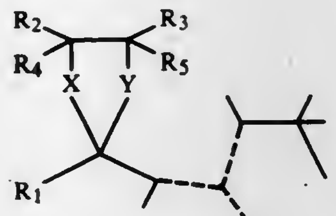

wherein R_1 represents C_1–C_4 lower alkyl; R_2, R_3, R_4 and R_5 represent hydrogen or C_1–C_3 lower alkyl; X and Y are the same and each represents oxygen and wherein one of the dashed lines represents a carbon-carbon double bond and each of the other of the dashed lines represent carbon-carbon single bonds.

4,374,999

INTERNAL HYDROFORMYLATION OF ACROLEIN ACETALS

Philip E. Garrou, Holliston, Mass., assignor to The Dow Chemical Company, Midland, Mich.

Filed Jan. 2, 1981, Ser. No. 222,184

Int. Cl.³ C07D *317/10, 319/04;* **C07C** *43/00*

U.S. Cl. 549—453 **6 Claims**

1. A one-step process for selectively hydroformylating an acetal of acrolein to a corresponding methylol acetal comprising contacting an acetal of acrolein with a gaseous mixture of carbon monoxide and hydrogen in the presence of a catalytic amount of a rhodium-cobalt bimetallic cluster loaded on an amine resin at a pressure of at least 500 p.s.i.a. and at a temperature in the range from about 50° to about 175° C., so as to effect hydroformylation predominantly on the acetal's unsaturated carbon atom adjacent to the carbon atom bearing two ether groups.

4,375,000

PROCESS FOR THE PREPARATION OF AN ARYL MONO-, DI-, AND/OR POLYURETHANE

Franz Merger, Frankenthal; Friedrich Towae, Ludwigshafen, and Wolfgang Harder, Weinheim, all of Fed. Rep. of Germany, assignors to BASF Aktiengesellschaft, Ludwigshafen, Fed. Rep. of Germany

Filed Mar. 31, 1980, Ser. No. 135,242

Claims priority, application Fed. Rep. of Germany, Apr. 30, 1979, 2917568; Oct. 20, 1979, 2942511

Int. Cl.³ C07C *125/07, 125/077, 125/063*

U.S. Cl. 560—25 **12 Claims**

1. A process for the preparation of an aryl mono-, di-, and/or polyurethane comprising the steps of

A. reacting a primary aromatic mono-, di- and/or polyamine with a carbamate of the formula H_2N-COOR in which R represents an unsubstituted or substituted aliphatic, cycloaliphatic or aromatic-aliphatic radical in the presence of an alcohol at temperatures greater than 160° C., and

B. separating the ammonia and other by-products from the aryl mono-, di-, and/or polyurethane.

4,375,001

ESTERS OF 2,3,6,6-TETRAMETHYL-CYCLOHEXENYL CARBOXYLIC ACIDS AND ODORANT MIXTURES THEREOF

Givaudan Corporation, 02, Clifton, N.J., and Hanspeter Schenk, Zumikon, Switzerland

Filed Jun. 4, 1980, Ser. No. 156,432

Claims priority, application Switzerland, Jun. 13, 1979, 5527/79; Apr. 24, 1980, 3163/80

Int. Cl.³ C07C *69/75*

U.S. Cl. 560—128 **6 Claims**

1. An ester of the formula

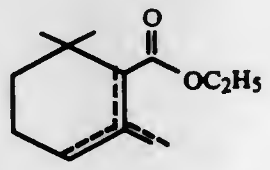

wherein one of the three broken lines represents an additional bond.

4,375,002

AMINES VIA THE AMINATION OF OLEFINS

John O. H. Peterson, North Windham, Me., and Howard S. Fales, West Reading, Conn., assignors to Air Products and Chemicals, Inc., Allentown, Pa.

Continuation-in-part of Ser. No. 148,352, May 9, 1980, Pat. No. 4,307,250. This application Apr. 8, 1981, Ser. No. 248,403

The portion of the term of this patent subsequent to Dec. 22, 1998, has been disclaimed.

Int. Cl.³ C07C *91/02*

U.S. Cl. 564—445 **20 Claims**

1. In a vapor phase catalytic amination process for the production of amines from a reaction mixture comprising an olefin having from 2–8 carbon atoms and a nitrogen compound selected from the group consisting of ammonia and primary and secondary amines at a temperature and pressure sufficient for effecting formation of said amine the improvement which comprises:

(a) employing a temperature and pressure sufficient to form said amine, but insufficient for forming substantial polymerization of the olefin; and

(b) employing as said catalyst a crystalline alumino silicate.

4,375,003

METHOD FOR THE HYDROGENATION OF NITRILES TO PRIMARY AMINES

Ronald J. Allain, and Gerald D. Smith, both of Richmond, Tex., assignors to Nalco Chemical Company, Oak Brook, Ill.

Continuation of Ser. No. 924,327, Jul. 13, 1978, abandoned, which is a continuation of Ser. No. 841,501, Oct. 11, 1977, abandoned, which is a continuation of Ser. No. 743,731, Nov. 22, 1976, abandoned. This application Jan. 15, 1979, Ser. No. 3,138

Int. Cl.³ C07C *85/12*

U.S. Cl. 564—492 **17 Claims**

1. In an improved process for catalytically hydrogenating aliphatic nitriles to aliphatic primary amines by contacting the aliphatic nitrile with hydrogen in the presence of a Raney cobalt catalyst, the improvement which comprises:

A. Contacting an aqueous medium containing dissolved therein an alkali metal hydroxide with a fixed group of cobalt-aluminum alloy particles, the alkali metal hydroxide being added incrementally to the aqueous medium during the contacting over a time interval,

(1) said aqueous medium containing from about 0 to 50 weight percent dissolved alkali,

(2) said group having an average particle diameter in the range of from about 0.002 to 0.5 inch,

(3) said cobalt-aluminum alloy having an initial cobalt to aluminum weight ratio of from about 30:70 to 70:30,

(4) said contacting being accomplished over a total interval of 2–30 hours,

(5) the addition rate of alkali metal hydroxide solution being so added to said medium during said contacting being from about 0.01 to 7 moles alkali metal hydroxide per mole of aluminum initially in said alloy particles per hour,

(6) the total quantity of alkali metal hydroxide so added being in the range of from about 0.5 to 20 moles of alkali metal hydroxide per mole of aluminum initially present in said alloy,

(7) the resulting aqueous medium produced during said contacting being maintained at a temperature at or below about 50° C.;

B. Washing the so treated group of particles to separate therefrom remaining unreacted alkali metal until the resulting wash water has a pH of less than about 7.5; and then,

C. Contacting the so washed group of particles with an aliphatic nitrile containing 3–40 carbon atoms and hydrogen gas at a pressure of from 50–1,000 psi at a temperature of from 50° to 170° C. whereby the aliphatic nitrile is hydrogenated to the corresponding aliphatic primary amine.

4,375,004
NORBORNYL ALKYL ETHERS

Mark A. Sprecker, Sea Bright, N.J., assignor to International Flavors & Fragrances Inc., New York, N.Y.
Continuation-in-part of Ser. No. 200,012, Oct. 23, 1980, Pat. No. 4,311,861. This application Oct. 22, 1981, Ser. No. 313,722
The portion of the term of this patent subsequent to Jan. 19, 1999, has been disclaimed.
Int. Cl.[3] C07C *43/18*

U.S. Cl. 568—665 **3 Claims**

1. A product comprising a composition of matter produced according to a process of intimately admixing ethylidene norbornene compound defined according to the structure:

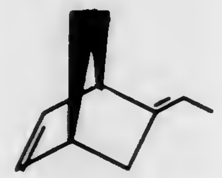

with an alcohol defined according to the structures:

R—OH

in the presence of a mineral acid catalyst or a Lewis acid catalyst and in the presence of an inert solvent or in the present of an excess of the alcohol reactant, the reaction temperature varying from about 25° C. up to 120° C., the mole ratio of catalyst to ethylidene norbornene having the structure:

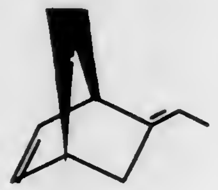

varying from about 1:99 up to about 1:10; the mole ratio of ethylidene norbornene reaction to ROH alcohol reactant varying from about 1:1 up to about 1:2, the moiety R being isopropyl.

2. A composition of matter which is a mixture of two compounds having the structures:

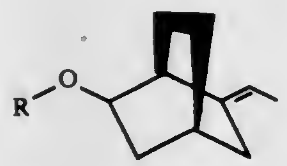

and

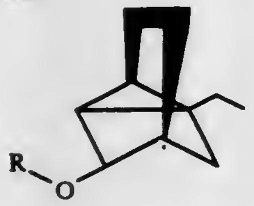

wherein R represents isopropyl.

3. A compound having the structures:

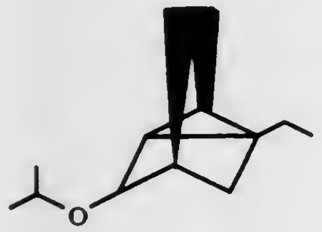

4,375,005
BRANCHED CHAIN OLEFINIC ALCOHOLS, THIOLS, ESTERS AND ETHERS, ORGANOLEPTIC USES THEREOF, PROCESSES FOR PREPARING SAME AND INTERMEDIATES THEREFOR

Richard M. Boden, Monmouth Beach, N.J., assignor to International Flavors & Fragrances Inc., New York, N.Y.
Filed Nov. 19, 1981, Ser. No. 322,734
Int. Cl.[3] C07C *29/40*

U.S. Cl. 568—878 **1 Claim**

1. A composition of matter comprising a major proportion of compounds characterized according to the structure:

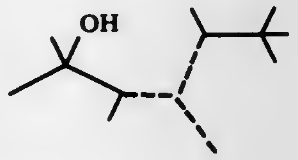

wherein in each of the molecules of the mixture one of the dashed lines represents a carbon-carbon double bond and each of the other of the dashed lines represents a carbon-carbon single bond, said composition of matter produced according to the process comprising the steps of:

(a) dimerization of isoamylene in the presence of an acid catalyst to form a mixture of diisoamylene compounds defined according to the structure:

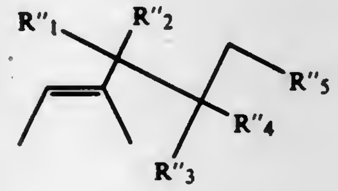

wherein R_1'', R_2'', R_3'', R_4'' and R_5'' represents hydrogen or methyl with three of R_1'', R_2'', R_3'', R_4'' and R_5'' representing methyl and the other two of R_1'', R_2'', R_3'', R_4'' and R_5'' representing hydrogen;

(b) reacting the resulting diisoamylene mixture with a compound selected from the group consisting of acetyl chloride and acetic anhydride in the presence of an acid catalyst to form a mixture containing a major proportion of compounds defined according to the structure:

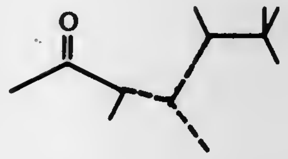

wherein in each of the molecules, one of the dashed lines is a carbon-carbon double bond and each of the other of the dashed lines represent carbon-carbon single bonds;

(c) reacting the resulting compound with methyl lithium at a temperature in the range of from 25° C. up to 50° C. in the presence of an inert solvent thereby forming a mixture of organolithium salts; and

(d) reacting the resulting mixture of organolithium salts with dilute aqueous mineral acid at a temperature of from 0° C. up to about 50° C. thereby forming a mixture of compounds containing a major proportion of compounds having the structure:

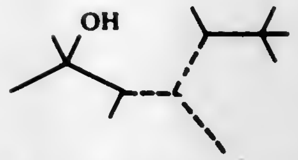

wherein in each of the molecules, one of the dashed lines represents a carbon-carbon double bond and each of the other of the dashed lines represent carbon-carbon single bonds; and

(e) distilling the resulting mixture.

4,375,006
STABILIZATION OF DIBROMOSTYRENE

Philip F. Jackisch, Royal Oak, Mich., assignor to Ethyl Corporation, Richmond, Va.
Division of Ser. No. 130,118, Mar. 13, 1980, abandoned. This application Aug. 14, 1981, Ser. No. 293,003
Int. Cl.[3] C07C *25/02*

U.S. Cl. 570—105 **6 Claims**

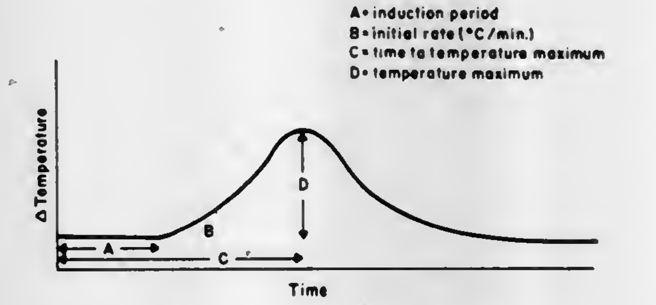

Representative Differential Thermal Analysis Curve of Polymerization

1. Dibromostyrene stabilized with a polymerization inhibiting quantity of a lower alkyl ester of gallic acid and a compound selected from the group consisting of phenothiazine, alkyl-substituted phenothiazines, and 4-tert-butylcatechol.

4,375,007
SILICON SOLAR CELLS WITH ALUMINUM-MAGNESIUM ALLOY LOW RESISTANCE CONTACTS

Sanford M. Marcus, Wilmington, Del., assignor to E. I. Du Pont de Nemours & Co., Wilmington, Del.

Division of Ser. No. 210,553, Nov. 26, 1980, Pat. No. 4,347,262. This application Nov. 12, 1981, Ser. No. 320,590

Int. Cl.³ H01L *31/06*

U.S. Cl. 136—256 **4 Claims**

1. A silicon solar cell coated with Si_3N_4 having a P-type and an N-type region and a P-N junction, the N surface of which has been metallized by (1) screen-printing thereon a thick film paste comprising a mixture of finely divided particles of a major amount of a metal powder, a minor amount of glass frits and a small amount of a 50 Al:50 Mg alloy, dispersed in an organic vehicle, and (2) firing the printed surface at a temperature of at least 500° C. to form electrically conductive contacts thereon.

4,375,008
METHOD FOR ENCAPSULATING COMPONENTS WITH CASES AND AN ENCAPSULATION PROVIDED BY THE METHOD

Joachim Dathe, Munich, Fed. Rep. of Germany, assignor to Siemens Aktiengesellschaft, Berlin and Munich, Fed. Rep. of Germany

Filed Apr. 28, 1980, Ser. No. 144,024

Claims priority, application Fed. Rep. of Germany, May 4, 1979, 2918106

Int. Cl.³ H05K *5/06;* H01R *43/00*

U.S. Cl. 174—17.05 **12 Claims**

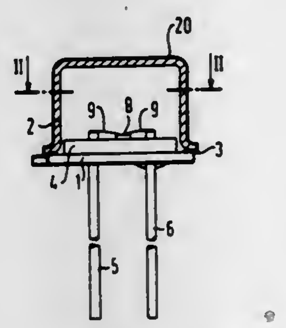

1. Encapsulation for a semiconductor component, comprising a base plate, a case with a low hydrogen permeability at the maximal temperature permitted for the component, said case being vacuum-welded to said base plate closing off said base plate and tempered in a hydrogen-containing atmosphere, a hydrogen atmosphere disposed in said case after tempering, a raised portion integral with said base plate inside said case, a plurality of lead-in lines passing through holes formed in said base plate and raised portion, glass beads disposed between said lead-in lines and said base plate and raised portion in said holes, and gold wires connected from said lead in lines to aluminum surfaces of the component in said case before said case is closed.

4. Method according to claim 1, which comprises disposing a hydrogen barrier layer on the case to prevent hydrogen from diffusing out of the case after tempering.

4,375,009
SHIELDED ELECTRICAL CABLE

James T. Fearnside, Lexington, and Thomas P. Stephens, Boxford, both of Mass., assignors to Hewlett-Packard Company, Palo Alto, Calif.

Filed Dec. 10, 1980, Ser. No. 214,933

Int. Cl.³ H01B *7/34*

U.S. Cl. 174—36 **3 Claims**

1. An electrical cable, comprising
an electrically insulating sheath,
a plurality of insulated electrical conductors mounted within said sheath, and
shielding made from wire that is knit with said wire in the

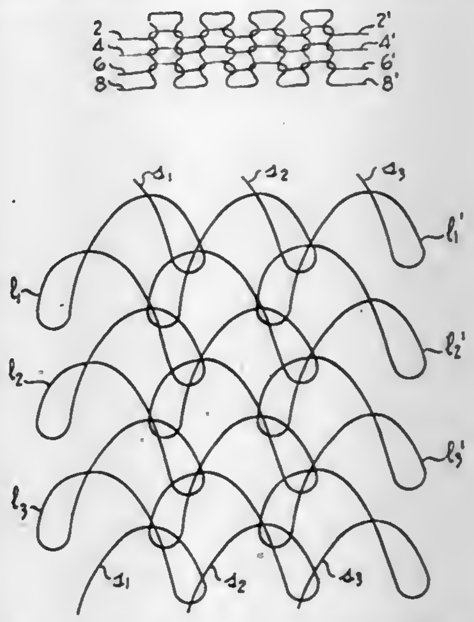

form of an integral sleeve encompassing said sheath, said wire having a steel core, a first coating of metal of greater conductivity than said steel core and a second coating of a metal having greater lubricity than the first coating.

4,375,010
PANEL CONSTRUCTION INCLUDING ELECTRICAL CONNECTORS

Lloyd C. Mollenkopf, Akeley, Minn., assignor to Rosemount Office Systems, Inc., Lakeville, Minn.

Filed Dec. 12, 1980, Ser. No. 215,691

Int. Cl.³ H02G *3/00*

U.S. Cl. 174—48 **14 Claims**

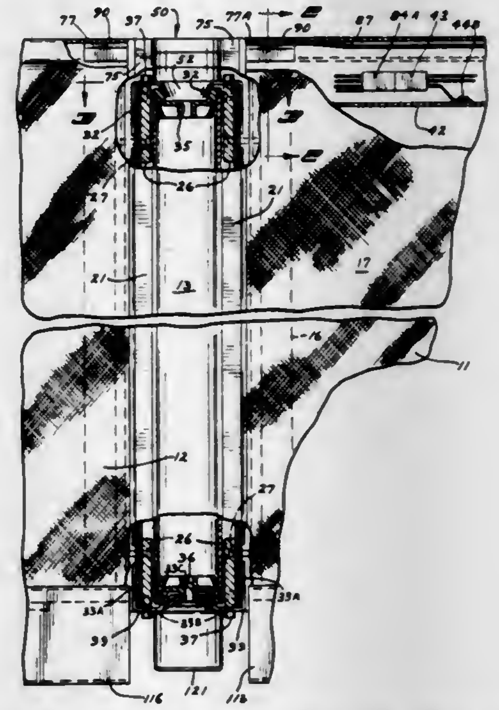

1. In combination with a pair of movable wall partitions, an assembly for shielding electrical wiring harnesses for passing from one movable wall partition to the other at the top of the junction region of the movable wall partitions, the movable partitions including metal channels forming electrical raceways along the top longitudinal length thereof and support members for coupling adjacent movable wall panels together, said assembly being separate from the support members and comprising a first generally cylindrical member adapted to be positioned with its center substantially centered between the movable partitions, at least one additional generally cylindrical member rotatably mounted on the first mentioned cylindrical

member for rotation relative thereto, a pair of panel insert members having portions adapted to fit within end portions of raceways of any movable partition with which the assembly is used, means to removably couple each of said panel insert members to one of the generally cylindrical members whereby each of the panel insert members can be rotated with one of the general cylindrical members relative to each other when installed on movable partitions, electrical wire means mounted in said raceways, said electrical wire means including connectors at opposite ends thereof adjacent the opposite sides of the respective partitions, and each connector having a ground wire connection with a ground wire attached thereto, and the ground wires from the opposite end connectors being connected to the associated metal channel raceway adjacent the respective ends of the associated raceway to ground the raceway and retain the connectors adjacent the respective ends of the raceway, and electrical harness means mounted within said panel insert members and traversing across and within the generally cylindrical members, said harness means including harness electrical connectors coupled to first mentioned connectors of the respective wire means in the adjoining movable wall partitions.

4,375,011
CABLE CONNECTOR
Dietrich Grünau, Säntisblick 5, D - 7778 Markdorf, Fed. Rep. of Germany
Filed Mar. 6, 1981, Ser. No. 241,371
Claims priority, application Fed. Rep. of Germany, May 7, 1980, 3017383
Int. Cl.³ H02G *3/18*
U.S. Cl. 174—65 SS 8 Claims

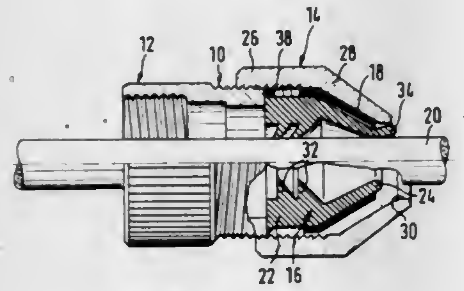

1. A fluid-tight cable connector for connecting electric cables with switch cabinets, plug-in connections and the like comprising a screw socket provided with an outer thread, a screw nut provided with an inner thread, a tubular rubber packing arranged within the screw nut and a thin-walled anti-rotation bushing arranged between the screw nut and the packing; the screw nut comprising an inner cylindrical portion provided with said inner thread and an inner conical portion, the mouth of which having an overdimension with respect to the cable diameter; the tubular packing comprising a cylindrical portion and a conical portion, the cylindrical portion having a radial front face abutting at a front face of the socket, said packing being provided with at least one deformable inner ring-shaped sealing lip and one outer ring-shaped sealing lip, an annular recess being formed between the cylindrical portion of the packing and the inner thread of the screw unit, the anti-rotation bushing also comprising a cylindrical portion and a conical portion, the cylindrical portion being of shorter axial length than the cylindrical portion of the packing and protruding into said annular recess; the outer conical surface of the packing, the conical portion of the bushing and the inner conical portion of the screw nut having the same angle of taper and substantially the same axial length.

4,375,012
TAPERED RETRACTILE CORDS
Eugene R. Cocco, Baltimore, Md.; William G. Pflugrad, Norcross, Ga., and Byron L. Small, Baltimore, Md., assignors to Western Electric Company, Incorporated, New York, N.Y.
Filed Apr. 29, 1981, Ser. No. 258,713
Int. Cl.³ H01B *7/06*
U.S. Cl. 174—69 **2 Claims**

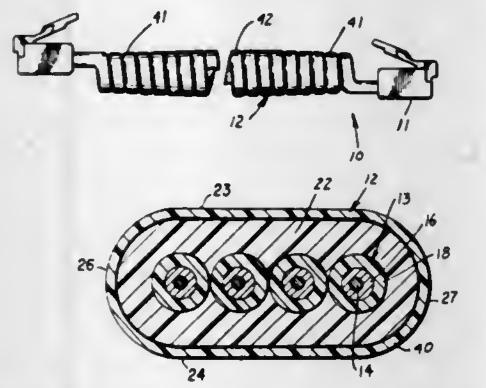

1. A tapered retractile cord which is made from cordage which includes a plurality of flexible conductors that are disposed in a substantially planar array with each of said conductors being insulated with a first thermoplastic material, a jacket which is made of a second thermoplastic material having a stiffness modulus that is substantially less than that of said first thermoplastic material and which encloses said planar array of conductors in a cross-sectional configuration having an inwardly facing side that is parallel to said array, and a coating which covers said jacket and which comprises a plastic material having a stiffness modulus that is substantially greater than that of said second thermoplastic material of said jacekt, said tapered cord including cordage being wound in a helical configuration and being substantially continuously tapered with convolutions thereof increasing in diameter from one end of the tapered cord to a portion intermediate its ends and then decreasing in diameter from said intermediate portion to its other end to provide said tapered cord with a controlled extensibility which increases substantially linearly from each end to said intermediate portion whereat the extensibility exceeds that of a cord comprising said cordage wound along its length in uniform convolutions having a diameter equal to the diameter of end convolutions of said tapered cord.

4,375,013
DEVICE FOR DIGIT RATE REDUCTION OF PCM-SIGNALS
Denis Cointot, Paris; Patrice Langlois, Saint-Maur, and Guy de Passoz, Lesigny, all of France, assignors to Societe Anonyme de Telecommunications, France
Filed Jul. 23, 1980, Ser. No. 171,946
Claims priority, application France, Aug. 10, 1979, 79 20445
Int. Cl.³ G10L *1/00;* **H04J** *3/18*
U.S. Cl. 179—15.55 R **3 Claims**

1. A digit rate reducing system for an input PCM signal S, said signal S including a plurality of samples x_n having a period T, comprising a predictor stage, an automatic gain compression AGC stage, and a quantizer stage in cascade arrangement;
said predictor stage comprising predictor means for deriving a predicted signal x_{pn} from a plurality of preceding samples x_n, and subtractor means for substracting from an input signal x_n said predicted signal x_{pn}, to form a difference signal d_n representing prediction error;
said automatic gain compression AGC stage comprising divider means for dividing the amplitude of said difference signal d_n to form a divided signal e_n;
said quantizer stage comprising first quantizing means for encoding said divided signal e_n to form a signal Y_n of reduced rate relative to said signal S, and second quantizing means responsive to said signal Y_n for providing a decoded signal e_n;
said automatic gain compression AGC stage further comprising means responsive to said decoded signal e_n for forming a decoded difference signal d_n in accordance with said signal Y_n;
said predictor stage further comprising first adder means coupled to receive said predicted signal x_{pn} and said decoded difference signal d_n, and having an output signal, means for deriving from said plurality of preceding samples x_n a plurality of coefficients a_i (n), where $1 \leqq i \leqq N$, according to a predetermined algorithm, a plurality of multiplier means $M_1 \ldots M_N$ coupled to receive the output signal from said first adder, delay line means $T_1 \ldots T_N$

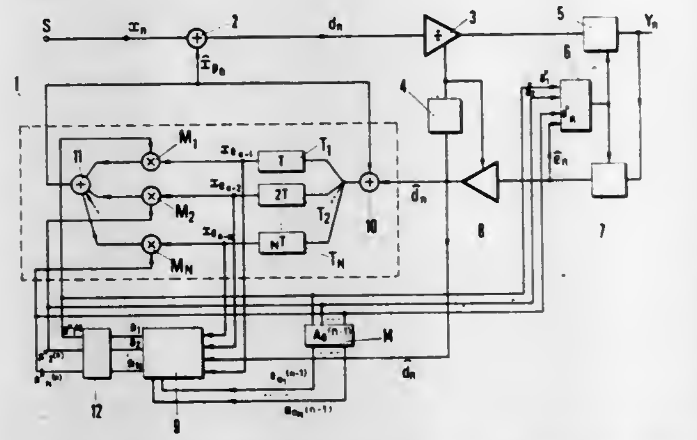

coupled between said first adder means and said respective multiplier means $M_1 \ldots M_N$, said delay line means $T_1 \ldots T_N$ providing respective delays of kT where $1 \leqq k \leqq N$, said plurality of multiplier means $M_1 \ldots M_N$ receiving said plurality of coefficients a_i (n) respectively and having respective outputs, second adder means coupled to receive said outputs of said plurality of multiplier means $M_1 \ldots M_N$ and having an output for providing said signal x_{pn} predicted from said plurality of preceding samples x_n; and
means respective to said plurality of coefficients a_i (n) for comparing at least one of said coefficients a_i (n) with a predetermined value to determine the statistical properties of said signal S, said comparing means being coupled to said quantizer stage for adapting the type of encoding to said statistical properties of said signal S.

4,375,014
CURRENT SENSING TRIGGER FOR A TELEPHONE SYSTEM
Allen C. Horak, Carson City, Mich., assignor to Great Lakes Communication Co. of Michigan, Carson City, Mich.
Filed Feb. 17, 1981, Ser. No. 234,722
Int. Cl.³ H04Q *1/36*
U.S. Cl. 179—16 EA **40 Claims**

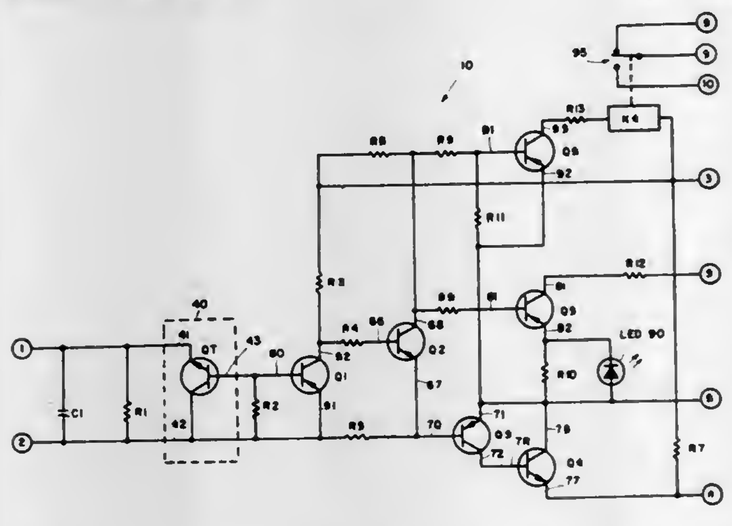

1. A loop closure seizure step-by-step telephone system comprising:
a first subscriber telephone set;
a central switching station;
means for interconnecting said first subscriber telephone set and said central switching station;
a stepping switch for connecting said first subscriber telephone set to a second subscriber telephone set;
means for generating dial pulses representative of a number being dialed on said first subscriber telephone set;
first and second semiconductor barrier means disposed in a series circuit relationship for receiving said dial pulses, said dial pulses establishing current therethrough;
means for sensing a trigger voltage between said first and second semiconductor barrier means when a current is established therethrough; and
means for amplifying said trigger voltage and operating said stepping switch to connect said first subscriber telephone set and a second subscriber telephone set pursuant to a number dialed on said first subscriber telephone set.

4,375,015
IMPROVED ELECTRONIC HYBRID CIRCUIT
Charles W. Chambers, Jr., Downers Grove, Ill., assignor to Tellabs, Inc., Lisle, Ill.
Division of Ser. No. 45,274, Jun. 4, 1979, Pat. No. 4,283,604. This application Jul. 3, 1980, Ser. No. 165,508
Int. Cl.³ H04B *1/58*
U.S. Cl. 179—170 NC **12 Claims**

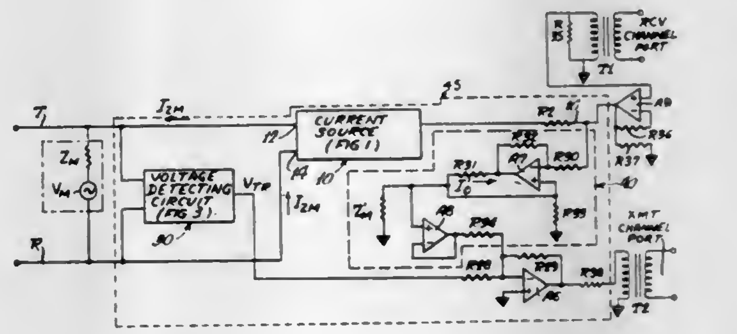

1. An electronic hybrid circuit for interfacing between receive and transmit channels of a long distance transmission circuit and a two-wire transmission system, for example the tip and ring leads of a telephone pair, for generating a controlled current flow through the system and for providing common mode rejection to longitudinal voltages on the system, said hybrid circuit having first and second outputs each for connection with a separate one of the wires and comprising first and second voltage amplifier means each having an input, an output and an output impedance connected between the amplifier means output and a separate one of said hybrid circuit outputs, said first voltage amplifier means output being connected through its output impedance with said hybrid circuit first output; means for connecting said first amplifier means output with said second amplifier means input so that voltage signals at said first voltage amplifier means input control the voltages generated at each of said amplifier means outputs; feedback means coupled between said hybrid circuit first output and said first amplifier means input; and circuit means coupled between said hybrid circuit outputs and said first amplifier means input, said feedback means and said circuit means coupling signals at said hybrid circuit outputs from the wires of the transmission system to said first amplifier means input, said feedback means and said circuit means in response to equal longitudinal voltages on the wires coupling to said first voltage amplifier means input signals which cancel to zero thereat so that said first and second voltage amplifier means do not generate voltages at their outputs in response to equal longitudinal voltages on the wires, whereby said hybrid circuit has common mode rejection to equal longitudinal voltages on the wires; wherein said first and second amplifier means each generate zero volts or reference potential at their outputs in response to equal longitudinal voltages on the wires and substantially equal value and oppo-

site direction current flows through their output impedances, and therefore at said hybrid circuit outputs, in response to and having a value in accordance with noncancelling signals at said first amplifier means input, wherein said two-wire transmission system is of the type having a metallic load impedance connected in series with a metallic voltage source across the wires, and further including means for coupling the receive channel with said feedback means and therefore with said first voltage amplifier means input for generating at said hybrid circuit outputs and through the load impedance a current flow having a value in accordance with the value of the voltage on the receive channel, said current flow through the load impedance generating a metallic voltage across the wires; voltage detecting circuit means coupled at inputs thereto with said hybrid circuit outputs for sensing the metallic voltage across the wires and for generating at an output therefrom a first control voltage having a value in accordance with the metallic voltage; third voltage amplifier means having an input and an output; means for coupling said third voltage amplifier means output with the transmit channel; means for coupling said voltage detecting circuit means output with said third voltage amplifier means input; monitoring means coupled at an input thereto with said means for coupling the receive channel with said feedback means for monitoring the value of signals on the receive channel and for generating at an output therefrom a second control voltage having a value in accordance with the value of the receive channel signals; and means for coupling said monitoring means output with said third amplifier means input so that said first and second control voltages which are generated in response to receive channel signals cancel each other at said third amplifier means input, whereby said third amplifier means does not generate an output in response to receive channel signals but generates an output in response to a metallic voltage generated across the two wires by the metallic voltage source.

4,375,016

VENTED EAR TIP FOR HEARING AID AND ADAPTER COUPLER THEREFORE

Mas Harada, Minneapolis, Minn., assignor to Qualitone Hearing Aids Inc., Minneapolis, Minn.

Filed Apr. 28, 1980, Ser. No. 144,340

Int. Cl.³ H04R *25/02*

U.S. Cl. 179—182 R **6 Claims**

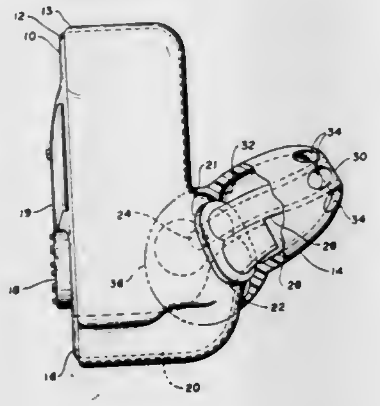

5. An insertable earpiece comprising, in combination:
an elongated generally cylindrical hollow housing with a bulbous tip portion ventilated by a plurality of apertures in a distal end thereof and a flared proximal tip portion with an inner annular shoulder angled to the axis of said housing;
a flanged adapter fitting seated against the inner annular shoulder of said housing to close the proximal end of said housing, said fitting including a sound tube projecting into said housing to communicate with at least one of said apertures in the distal end of said tip portion while more than one of the plurality of said apertures communicates with a chamber in said housing; and
a vent tube projecting through said fitting into said chamber to provide a path from the auditory canal through said chamber to the outside, said vent tube portion extending into said housing being shorter than said sound tube and the other end of said vent tube being angled away from the axis of the tube delivering sound to said fitting.

4,375,017

CALCULATOR TYPE KEYBOARD INCLUDING PRINTED CIRCUIT BOARD CONTACTS AND METHOD OF FORMING

Theodore D. Smith, Indianapolis, Ind., assignor to RCA Corporation, New York, N.Y.

Continuation of Ser. No. 748,026, Dec. 6, 1976, abandoned. This application Mar. 26, 1980, Ser. No. 134,214

Int. Cl.³ H01H *13/70, 1/00, 11/04*

U.S. Cl. 200—5 A **10 Claims**

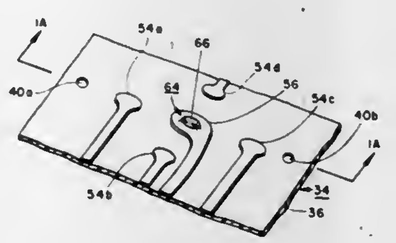

1. Apparatus comprising:
a printed circuit board including a dielectric substrate and a conductive layer formed on the surface of the dielectric substrate;
an impact crater formed in said conductive layer at an imperforate portion of said dielectric substrate having an abrupt raised edge integral with the material of said conductive layer and extending outward from the surface of said conductive layer;
a movable member positioned over said raised edge of said impact crater; and
means for urging said movable member into contact with said edge of said impact crater.

7. The apparatus recited in claim 1 wherein said printed circuit board includes at least a second conductor including a contact area positioned to be contacted by said movable contact member before said edge is contacted by said movable contact member.

8. The apparatus recited in claim 7 wherein said movable contact member includes support arms extending inward from the periphery of an aperture in a generally planar web to intersect in a crisscross configuration at least a portion of which is contoured in a dome-like shape, said dome-like shape having an apex in general alignment with said fixed contact member; and at least one contact blade extending outward from the intersection of said support arms, said contact blade contacting said contact area of said second conductor before an area of said dome-like shape at least in proximity to said apex contacts said edge of said fixed contact member.

4,375,018

MEMBRANE SWITCH HAVING ADHESIVE LABEL AS EDGE SEAL

Stephen K. Petersen, Rosemount, Minn., assignor to Sheldahl, Inc., Northfield, Minn.

Filed Jun. 16, 1980, Ser. No. 159,954

Int. Cl.³ H01H *13/70*

U.S. Cl. 200—5 A **4 Claims**

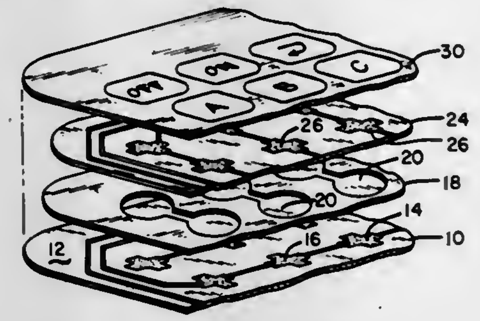

1. A membrane switch comprising:
(a) a first substrate member formed from a flexible insulative material having a first pattern of conductive elements at predetermined coordinate locations thereon;
(b) an insulative spacer member superimposed on said first substrate member and having a pattern of apertures therethrough at said predetermined coordinate locations, said spacer member being of a smaller size such that when superimposed on said first substrate member with said pattern of apertures aligned with said first pattern of conductive elements, a predetermined area of said first substrate member proximate the periphery thereof extends outwardly beyond the edges of said spacer member;
(c) a second substrate member formed from a flexible insulative material superimposed on said spacer member having a second pattern of conductive elements at predetermined coordinate locations corresponding to said predetermined coordinate locations of said apertures on said spacer member, said second substrate being of a smaller size than said spacer member such that when superimposed on said spacer member with said second pattern of conductive elements aligned with said apertures, a predetermined area of said spacer member proximate the perimeter thereof extends outwardly beyond the edges of said second substrate member; and
(d) a flexible insulative cover layer overlying said superimposed members in superficial engagement with at least peripheral portions thereof, and having an adhesive coating on one major surface thereof for individually bonding and sealing at least perimeter portions of said second substrate, said spacer member and said first substrate member to said cover layer.

4,375,019

DEVICE FOR ADJUSTING POSITION OF DRIVE ELEMENT FOR OPENING AND CLOSING AUTOMATICALLY HORIZONTALLY OPENING AND CLOSING SLIDING DOOR

Kenji Yoshida, Tokyo, Japan, assignor to Solic Co., Ltd., Tokyo, Japan

Filed Oct. 7, 1980, Ser. No. 194,780

Int. Cl.³ H01H *3/12;* **F05F** *15/20*

U.S. Cl. 200—52 R **3 Claims**

1. A device for adjusting the opening and closing position of a sliding door by adjusting at least one drive element thereof, comprising in combination:
(a) guide rails (6) disposed above a defined door station for guiding a sliding door (5) therealong;
(b) an endless wire mechanism (3) driven by a motor (2) including controller means (1), said mechanism including endless means (7) extending across said door station held by pulleys along a travel path;
(c) driven element switch means (4) and at least one position adjustable drive element (9) mounted on said endless means (7), said drive element (9) having a U-shaped frame (12) protruding ends (13) with magnet means actuators (14) for enabling said driven element switch means (4) and elastic means (15) holding said drive element (9) to said endless wire mechanism (3) but permitting said drive element (9) to slide along said mechanism when the elastic

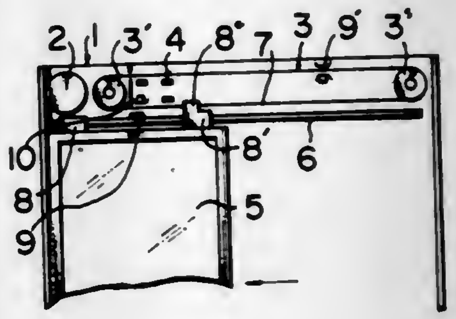

force is overcome so that the drive element may be positioned at desired locations along said travel path, said drive element being adapted to enable said driven element switch means (4); and,
(d) a stopper (10) along said travel path, said stopper (10) having grooves (11) so disposed as to stop said drive element (9) to contact the driven element switch means (4).

4,375,020

OSCILLATING LEVEL INDICATOR

Johan L. M. Holterbosch, Bunnik, Netherlands, assignor to Magnetrol International, Zele, Belgium

Continuation of Ser. No. 36,548, May 7, 1979, abandoned. This application Jun. 15, 1981, Ser. No. 273,456

Claims priority, application Netherlands, May 11, 1978, 7805055

Int. Cl.³ H01H *35/00*

U.S. Cl. 200—61.21 **12 Claims**

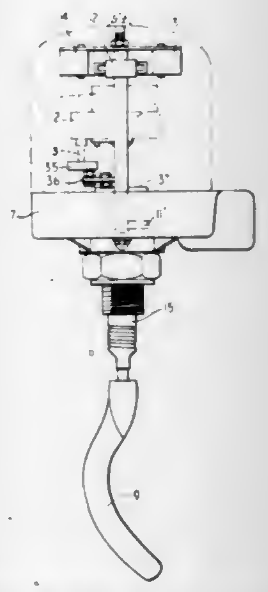

1. In a level-indicating apparatus for detecting the level of material within a container, having a drive motor, a motor drive shaft and a switch positioned adjacent the drive motor, the drive motor being energizable by means of the switch to provide continuous rotating motion to the motor drive shaft, said drive motor being movably mounted in a housing for swinging movement to actuate or deactuate said switch, a vane shaft extending out of said housing, and a vane coupled to said vane shaft and adapted to contact the material in said container to cause said swinging movement of said motor when a predetermined resistance is encountered by the vane, the improvement comprising:
an auxiliary drive means interconnecting the motor drive

shaft and the vane shaft to convert said continuous rotating motion of said motor drive shaft into rocking rotative movement, said rocking rotative movement being imparted to said vane shaft to cause movement of said vane in an oscillatory manner about the axis of the vane shaft; and

flexible sealing means having first and second ends secured to said vane shaft and to said housing, respectively, so as to be sealed thereagainst and immovable in relation thereto, the flexible sealing means having a central portion capable of torsional flexing in response to the oscillatory movement of the vane shaft and vane.

4,375,021

RAPID ELECTRIC-ARC EXTINGUISHING ASSEMBLY IN CIRCUIT-BREAKING DEVICES SUCH AS ELECTRIC CIRCUIT BREAKERS

Franco P. Pardini, and Francesco De Vizzi, both of Milan, Italy, assignors to General Electric Company, New York, N.Y.

Filed Dec. 16, 1980, Ser. No. 217,062

Claims priority, application Italy, Jan. 31, 1980, 19591 A/80

Int. Cl.³ H01H *33/10*

U.S. Cl. 200—147 B **13 Claims**

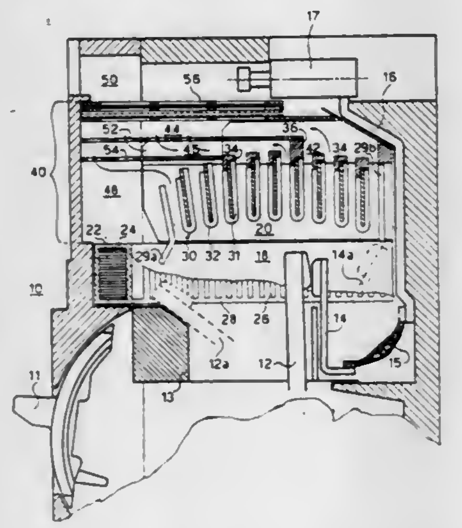

1. A current limiting circuit breaker comprising, in combination:

first and second contacts;

first and second elongated current carrying arms respectively carrying adjacent their corresponding one ends said first and second contacts, at least said first arm being movable with respect to said second arm between a closed position in closely spaced, substantially parallel relation with said second arm and with said first and second contacts in engaged relation and an open position with said first and second contacts in separated relation;

an arc chute positioned in confronting relation with said first and second contacts and including a stack of closely spaced, generally parallel ferromagnetic arc plates arrayed along the path travelled by said first contact during opening movement of said first arm, each said arc plate comprised of a thin metallic sheet of relatively high electrical resistivity formed in a U-shaped configuration to provide a pair of closely spaced arms joined by a curved portion disposed in contiguous relation with said travel path of said first contact at one end, said arms having offset terminations at an opposite end, and including a thin electrically insulative sheet interposed between said arms to force arc current to flow along the U-shaped path created by said metallic sheet; and

arc motivating means disposed in confronting relation with said arc chute and including a pair of columns flanking said travel path of said first contact, said columns cooperating with said arc plates as said first arm moves to its open position to promote rapid movement of a consequent arc drawn between said contacts into said arc chute to be split up and cooled by said arc plates.

4,375,022

CIRCUIT BREAKER FITTED WITH A DEVICE FOR INDICATING A SHORT CIRCUIT

Bernard Daussin, Mesnil St Laurent, and Jean Hennemann, Homblieres, both of France, assignors to Alsthom-Unelec, Paris, France

Filed Mar. 19, 1980, Ser. No. 131,720

Claims priority, application France, Mar. 23, 1979, 79 07398

Int. Cl.³ H01H *33/26, 33/54*

U.S. Cl. 200—148 R **9 Claims**

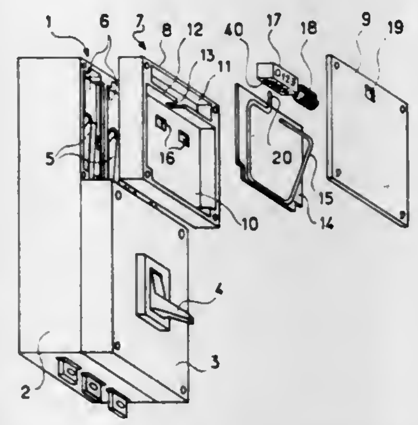

1. In an air-type circuit breaker provided with a device for indicating the existence of a short-circuit and comprising, for each circuit-breaking pole, separable contacts disposed inside a breaking chamber in which an electric arc develops upon separation of the contacts, the improvement wherein said short-circuit indicating device comprises means separate from said contacts and specifically responsive to a gas pressure wave created by said electric arc developed in the breaking chamber at a current level constituting a short-circuit condition of the circuit-breaker as contrasted to an abnormally high over-current, and wherein said short-circuit indicating device comprises a movable member subject both to a stress developd by the gas pressure wave and to an opposing stress, and wherein said movable member comprises a member passable from a first stable "no pressure" position to a second stable "pressurized" position when the stress developed by the gas pressure wave is greater than the opposing stress, means for maintaining said movable member in the "pressurized" position after disappearance of the gas pressure wave, means for restoring it to the "no pressure" position by an intentional resetting action, and wherein said circuit-breaker comprises a closed casing, a pressure wave generated in the breaking chamber being propagated through the entire casing and wherein said short-circuit indicating device comprises a cylinder internally of the circuit breaker casing and integral therewith, an opening within the casing coaxial with said cylinder, a piston mounted within said cylinder and slidable therein and a sealing washer borne by said piston and in frictional engagement with the interior of the cylinder, an indicating element carried by said piston and projectable through said opening within the casing wall, said sealing washer being of a material and being sized to the diameter of the cylinder such that said indicator piston moves from said first position to said second position responsive to a gas pressure wave of predetermined value corresponding to a short circuit condition, and wherein said indicator piston is manually displaceable from said second position to said first position, constitutes said member passable from said first position to said second position, and said sealing washer constitutes said means for maintaining the movable member in the "pressurized" position after disappearance of the gas pressure wave.

4,375,023

GAS-BLAST SWITCH

Hans-Rudolf Wüthrich; Hubert Speigel, both of Oberentfelden; Hermann Lehner, Gränichen, and Peter Krebs, Hirschthal, all of Switzerland, assignors to Sprecher & Schuh AG, Aarau, Switzerland

Filed Apr. 7, 1980, Ser. No. 138,116

Claims priority, application Switzerland, Jul. 10, 1979, 6416/79

Int. Cl.³ H01H *33/70, 33/12*

U.S. Cl. 200—148 R **7 Claims**

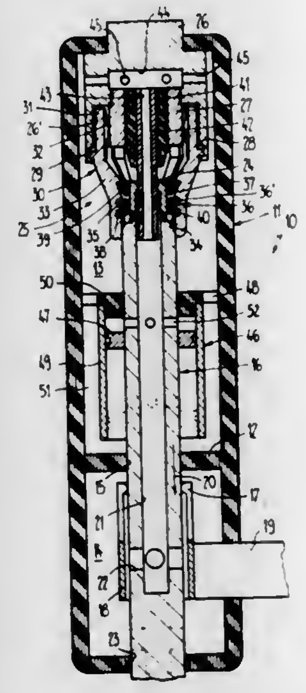

1. A gas-blast switch comprising:

a switch housing containing an internal space;

a first partition wall for dividing the internal space of the switch housing into an extinguishing chamber and an expansion chamber;

a movable substantially tubular-shaped contact element displaceably guided through said partition wall;

said contact element, during a cut-off stroke of the gas-blast switch, establishing a flow communication between both of said chambers;

a fixed contact set arranged in said extinguishing chamber;

said fixed contact set coacting with said movable contact element;

said fixed contact set having a rim of rated current contacts which, in a cut-on position of the gas-blast switch, engages about the movable contact element;

a burn-off ring electrically connected with the rim of rated current contacts;

an intermediate electrode which is electrically insulated from the rated current contacts;

said intermediate electrode, in the cut-on position of the gas-blast switch sealingly engaging with the movable contact element;

said movable contact element during the course of a cut-off stroke initially coming out of engagement with the rated current contacts and only thereafter coming out of engagement with the intermediate electrode, so that initially an arc is drawn between the burn-off ring and the intermediate electrode;

said movable contact element and said fixed contact set defining therebetween a separation path during said cut-off stroke;

a second partition wall for dividing said extinguishing chamber into a zone including said separation path and a zone remote from said separation path;

said burn-off ring being arranged within the rim of rated current contacts and being rearwardly inset with respect to contact surfaces of the rated current contacts which coact with the movable contact element;

a pump device operatively connected with the movable contact element and disposed in said zone remote from said separation path; and

said pump device conveying, during the cut-off stroke of the gas-blast switch, an extinguishing gas out of said zone remote from said separation path through said second partition wall into the zone including said separation path.

4,375,024

APPARATUS FOR WELDING BASE PINS OF FLUORESCENT LAMP

Masatoshi Hayakawa, Nagoya, and Yoshitami Sakazaki, Tajimi, both of Japan, assignors to CKD Corporation, Komaki, Japan

Filed Aug. 14, 1980, Ser. No. 178,108

Claims priority, application Japan, Dec. 14, 1979, 54-162617

Int. Cl.³ B23K *9/00*

U.S. Cl. 219—56 **5 Claims**

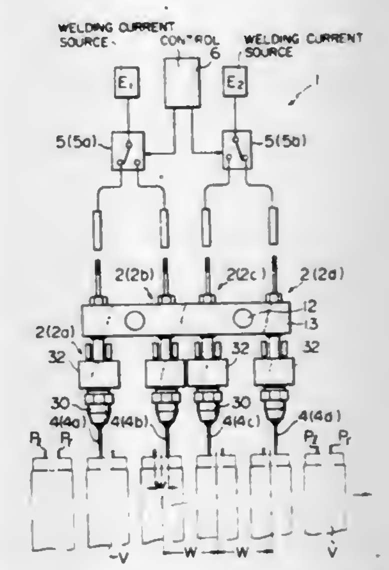

1. An apparatus for welding a first base pin at a first location and a second pin at a second location on each of a line of fluorescent lamps arranged along a path for advancement in a direction of advancement, equally spaced by a predetermined distance W, the first pin and second pin on each fluorescent lamp being spaced from each other a predetermined distance w along the path, the lamps being advanced stepwise the distance W in the direction of advancement, said apparatus comprising:

first, second, third, and fourth successively adjacent electrode holders for respectively removably holding first, second, third and fourth welding electrodes, disposed spaced along the path; said first and second electrode holders being spaced from each other a predetermined distance D_1 along the path; said third and fourth electrode holders being spaced from each other the predetermined distance D_1 along the path; said second and third electrode holders being spaced a predetermined distance D_2 along the path; said distances D_1 and D_2 being such that said first and third welding electrodes are both aligned with said lamps for welding only first base pins and said second and fourth welding electrodes are both aligned with said lamps for welding only second base pins;

first switch means, responsive to a first input signal, for alternatively electrically connecting said first and second welding electrodes to an electrical power source;

second switch means, responsive to a second input signal, for alternatively electrically connecting said third and fourth welding electrodes to said power source;

switch control means for providing said first input signal to said first switch means to switch the connection of said power source fom one of said first and second welding electrodes to the other, and for providing said second input signal to said second switch means to switch the connection of said power source from one of said third and fourth electrodes to the other when the lamp located at said second electrode holder when said first input signal

is provided to said first switch means arrives at said fourth electrode holder, so that either said first and fourth welding electrodes or said second and third welding electrodes may be removed without stopping the welding operation or failing to weld any of said first and second pins to said lamps.

4,375,025
LASER STRIP MARKER
William J. Carlson, Erie, Pa., assignor to Automated Industrial Systems, Inc., Fairview, Pa.
Filed Jun. 19, 1980, Ser. No. 161,137
Int. Cl.³ B23K *27/00*
U.S. Cl. 219—121 LH **6 Claims**

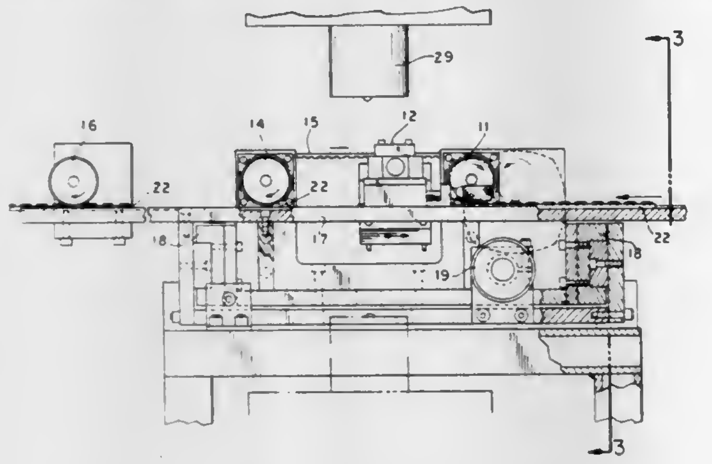

1. A strip feed and marking machine comprising,
a frame **10**,
a guide rail,
slidable means supporting said guide rail on said frame and adapted to carry strips **22** of electrical components,
a laser **29** on said frame,
means on said machine to move said strips **14**, **16** along said guide rail,
an electric eye and a light source **27**,
means slidably supporting said electric eye and said light source **27** on said frame,
whereby light from said source **27** to said electric eye is adapted to be intercepted by the leading edges of said electrical components **30**,
said electric eye being connected to said laser **29** to trigger said laser when a leading edge of a said component intercepts said light from said light source to said electric eye whereby said laser is triggered and marks a said electric component,
and first micrometer means **19** connecting said guide rail to said frame for moving said guide rail in a first direction relative to said frame,
a second micrometer means **20** connected to said frame and to said means slidably supporting said electric eye to adjust the position of said electric eye and light source relative to said frame in a said first direction and a third micrometer means **13** connected to said frame and to said means supporting said electric eye to adjust the position of said electric eye and light in a second direction relative to said frame.

4,375,026
WELD QUALITY MONITOR
Frank W. Kearney, Champaign, Ill., assignor to The United States of America as represented by the Secretary of the Army, Washington, D.C.
Filed May 29, 1981, Ser. No. 268,216
Int. Cl.³ B23K *9/10*
U.S. Cl. 219—130.01 **10 Claims**

1. A weld quality monitor adapted for use with an electric arc welding machine producing a weld bead, comprising:
voltage sensor means for producing a signal indicative of weld voltage of said arc welding machine;
current sensor means for producing a signal indicative of weld current of said arc welding machine;
speed sensor means for producing a signal indicative of weld speed of said arc welding machine including two noncontacting radiation responsive sensors spaced longitudinally of said weld bead each generating an output signal, and further comprising comparator means responsive to said

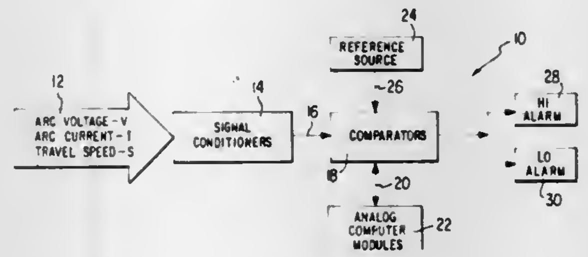

two output signals for comparing same and producing a signal indicative of temperature difference along said weld bead, wherein said temperature difference is indicative of said weld speed; reference signal generating means for generating reference signals indicative of optimum weld voltage, optimum weld current and optimum weld speed; and
comparator means for comparing said reference signals to said weld voltage signal, said weld current signal and said weld speed signal.

4,375,027
DUAL CHAMBERED HIGH PRESSURE FURNACE
Robert J. Zeto, Lincroft, N.J., and Franz X. Zimmerman, Erie, Pa., assignors to The United States of America as represented by the Secretary of the Army, Washington, D.C.
Division of Ser. No. 13,436, Feb. 21, 1979, Pat. No. 4,235,841, which is a continuation-in-part of Ser. No. 829,883, Sep. 1, 1977, abandoned. This application Jun. 2, 1980, Ser. No. 155,334
Int. Cl.³ B01J *3/04*
U.S. Cl. 219—390 **2 Claims**

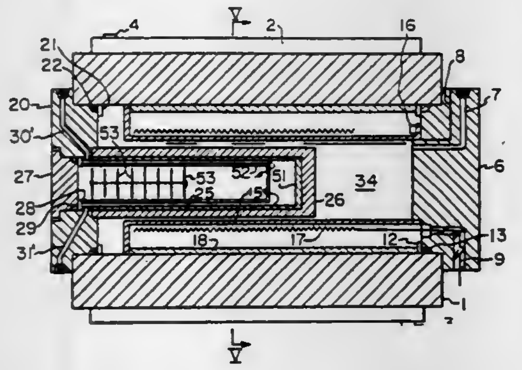

1. A double chambered high pressure furnace for treating specimens and workpieces with process gases at elevated pressures and temperatures comprising
a. a cylindrical pressure vessel,
b. a rear end closure device for sealing one end of the cylindrical pressure vessel,
c. an electrical heating element supported within the interior of the cylindrical pressure vessel near the inner wall thereof,
d. an apertured front end closure device for partially sealing the other end of the cylindrical pressure vessel,
e. a relatively thin-walled inner container supported from the front closure device and opening only to the aperture in the front closure device, the said inner container interior defining a process chamber, and the inner container exterior along with the pressure vessel and end closure defining a furnace chamber, both chambers being sealed from the atmosphere,

f. a small closure device for sealing the aperture in the front closure such that the inner container and small closure define a process chamber isolated from the furnace chamber,
g. means for securing the front closure, small closure and rear closure devices,
h. means for introducing blanket gasses from a source of pressurized blanket gas to the furnace chamber and process gases from a source of pressurized process gas to the process chamber, said means for introducing process gases comprising passages in said front end closure,
i. means for minimizing the pressure difference between the gases on each side of the inner container to enable it to maintain its original shape, said minimizing means comprising means for sensing the pressure difference, if any, and in response to that difference, controlling the relative application of the sources of blanket and process gases to the furnace chamber and process chamber respectively, and
j. means defining a first oxidation resistant liner on the inside of said inner container, means defining a second oxidation resistant liner radially spaced from said first liner, the space between said first and second liners defining a passage opening into the process chamber at the end opposite the front closure, said passage in communication with one of the passageways in the front end closure device whereby purge or process gases passing through said passage are heated before being directed into the process chamber.
k. additionally comprising within said second oxidation resistant liner isothermal plates serving to reduce cooling at the ends of the workspace.

4,375,028
ELECTRIC KETTLE
Paul A. P. Wood, Richmond, England, assignor to Pifco Limited, Manchester, England
Filed Mar. 31, 1981, Ser. No. 249,528
Claims priority, application United Kingdom, Apr. 1, 1980, 8010875; Apr. 24, 1980, 8013549; Sep. 27, 1980, 8031304
Int. Cl.³ F27D *11/02*
U.S. Cl. 219—441 **11 Claims**

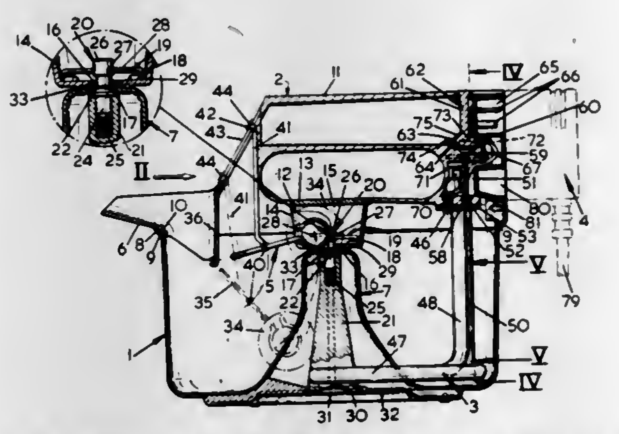

1. An electric kettle comprising a bowl, a lid for closing the bowl, a spout through which the bowl can be filled with water, and electrical heating element which is connected to the lid and suspended within the bowl when the lid is fitted on the kettle, means whereby the element can be connected to an electricity supply, and a cut-out arrangement for the heating element comprising a switch operable by a shape memory effect actuator, which is located within the bowl adjacent the element and on attainment of a predetermined temperature, greater than the boiling temperature of water, changes its physical shape sufficiently to operate the switch and thereby prevent the element being supplied with current from the supply.

4,375,029
CONTROL APPARATUS FOR THERMAL EQUIPMENT PARTICULARLY A HEAT ENGINE
Per G. Zacho, Nordborg, and Kjeld Abrendsen, Sonderborg, both of Denmark, assignors to Danfoss A/S, Nordborg, Denmark
Continuation of Ser. No. 64,995, Aug. 9, 1979, abandoned, which is a continuation of Ser. No. 915,736, Jun. 15, 1978, abandoned. This application Sep. 24, 1980, Ser. No. 190,636
Claims priority, application Fed. Rep. of Germany, Jun. 24, 1977, 2728380
Int. Cl.³ H05B *1/02*
U.S. Cl. 219—493 **1 Claim**

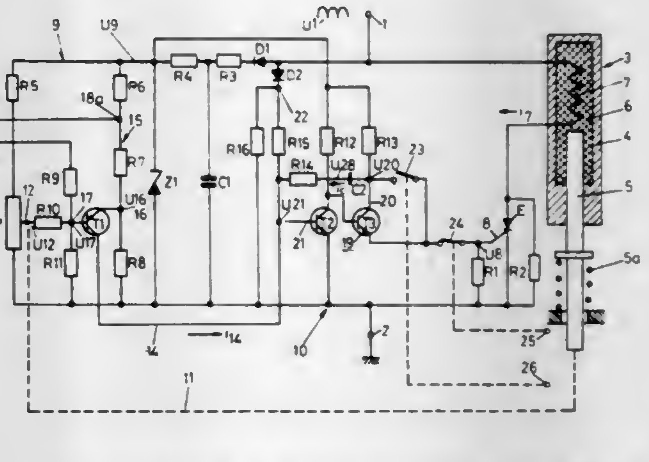

1. Control apparatus for a heat actuated device of the type having a heating resistor and a spring biased motor member movable in response to heat generated by said resistor, comprising, a controlled rectifier in series with said resistor, a source of full wave rectified voltage for said heating resistor controlled transistor having the emitter thereof connected to said rectifier to effect triggering thereof, said input transistor effecting a turning on and triggering occurrences of said output transistor upon each turning off of said input transistor, a first signal means derived from said source of voltage connected through resistor means to the base of said input transistor effective alone in the absence of other signals to effect turning said input transistor on and off during each half cycle thereof, second signal means comprising R-C circuit means connected to the collector of said output transistor and said base of said input transistor providing a time-dependent decreasing current signal subsequent to each of said triggering occurrences for delaying the turning off of said input transistor, third signal means connected to said motor member for producing a current signal corresponding to the actual position of said motor member, said third signal means being connected to said base of said input transistor to supplement said first and second signals to effect a delay of said triggering for a number of said half cycles corresponding to the instant position of said motor member, said first signal means derived from said full wave rectified voltage providing synchronization whereby said input transistor is turned on during every half cycle thereof to provide cyclical interruption of said triggering.

4,375,030
EXTENDED RANGE VARIATOR CONVERSION MECHANISM
Raymond H. Devanney, Winsted, Conn., assignor to Veeder Industries Inc., Hartford, Conn.
Continuation-in-part of Ser. No. 70,718, Aug. 29, 1979, Pat. No. 4,269,078. This application May 1, 1981, Ser. No. 259,708
Claims priority, application Australia, Aug. 18, 1980, 61530/80; European Pat. Off., Aug. 21, 1980, 80302901.6
The portion of the term of this patent subsequent to May 26, 1998, has been disclaimed.
Int. Cl.³ F16H *3/22*
U.S. Cl. 235—61 L **16 Claims**

1. In an extended range unit volume price variator settable for establishing the amount of each place of a multiple place

unit volume price and having a rotary input with a primary stack of coaxial gears adapted to be rotated by a fluid meter in accordance with the volume amount of metered fluid; a plurality of rotatable drive range arm assemblies for a plurality of places of ascending order respectively of the multiple place unit volume price having respective rotatable range arm shafts with axes radially offset from and generally parallel to the axis of the primary gear stack, respective range arms pivotally and axially shiftable on the respective range arm shafts for selective engagement with the primary stack of gears for rotating the respective range arm shafts therewith, and a range arm output gear on each range arm shaft; a rotary differential gear mechanism coaxial with the primary gear stack in engagement with the range arm output gears for combining the rotatable drives through the range arms with relative drive ratios in accordance with their respective places; and an auxiliary higher place price selector mechanism for establishing a next higher place price to said plurality of places of ascending order and having an auxiliary rotatable drive take-off assembly with a rotatable take-off shaft generally parallel to and radially offset from the primary gear stack, a take-off shaft input gear driven by the rotary input and rotatably mounted on the take-off shaft for being coupled to the take-off shaft, and an auxiliary take-off shaft driven gear driven by the take-off shaft; a rotary auxiliary differential in operative engagement with said differential gear mechanism; and an auxiliary higher place selector with a shiftable selector lever shiftable between a plurality of operational positions thereof and a selector gear rotatably mounted on the

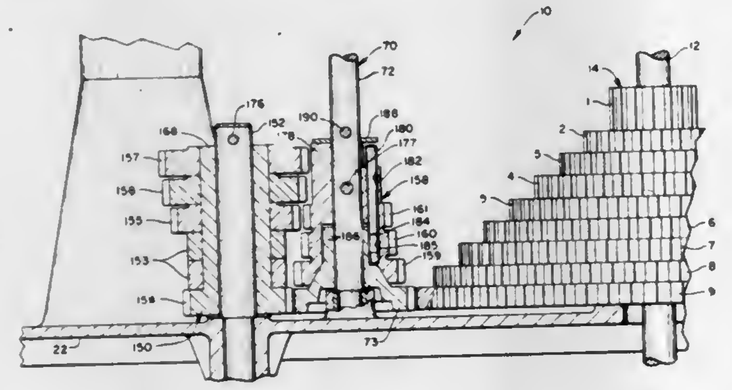

selector lever for operatively interconnecting the auxiliary take-off shaft driven gear and auxiliary differential in a first operational position of the selector lever; the auxiliary differential being operable for combining the rotatable drives through the differential gear mechanism and selector gear with relative drive ratios in accordance with the respective places of the unit volume price and whereby, with the take-off shaft input gear coupled to the take-off shaft, the selector lever is adapted to be selectively shifted to its said first position for selectively establishing a said next higher place whole number price of a; the improvement wherein the extended range variator further comprises a standby conversion mechanism for selectively converting the auxiliary higher place price selector mechanism for selectively establishing a said next higher place whole number price of b, the standby conversion mechanism comprising an auxiliary compound gear with a plurality of gears including first and second gears, means for rotatably supporting the auxiliary compound gear with said first gear thereof in operative engagement with said take-off shaft input gear to be driven thereby, a first take-off shaft drive gear mounted on the take-off shaft for operative engagement by said second gear of said compound gear and for rotating the take-off shaft, and means for selectively coupling said take-off shaft input gear to the take-off shaft for selectively driving the shaft directly with said input gear at a first drive ratio and alternatively via the compound gear and said first take-off shaft drive gear at a second drive ratio which is b/a times the said first drive ratio for selectively establishing a said next higher place price of b with the selector lever in its said first position.

4,375,031

METHOD AND DEVICE FOR MEASURING A DEGREE OF EXHAUSTION OF PHOTOGRAPHIC PROCESSING SOLUTIONS

Yujiro Kaneko, and Hiroshi Fujisaki, both of Tokyo, Japan, assignors to Fuji Photo Film Co., Ltd., Kanagawa, Japan

Filed Mar. 3, 1981, Ser. No. 239,927

Claims priority, application Japan, Mar. 6, 1980, 55-29690[U]

Int. Cl.³ G06C *3/00;* **G03C** *1/00*

U.S. Cl. 235—64.7 **11 Claims**

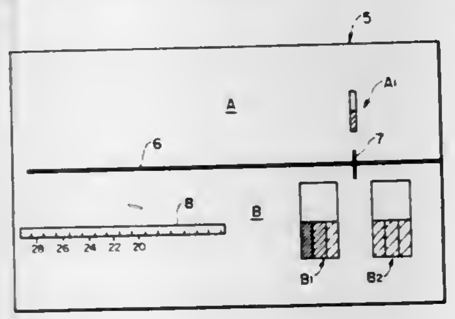

1. An exhaustion degree measuring device for determining a degree of exhaustion of a photographic processing solution, comprising:

a photographic strip, said strip having first and second strip parts which have been previously exposed to said processing solution, said first and second strip parts having first and second variable densities, respectively, along a length thereof, said strip having first and second scales adjacent said first and second strip parts; and

a measuring board, said board having a base member having first and second reference density windows therein, said first and second reference density windows having first and second reference density parts and first and second transparent parts adjacent thereto, respectively, said first reference density part having a first predetermined reference density, a middle section of said second reference density part having a second predetermined reference density; whereby

said first strip part is placed under said first transparent part of said first reference density window and said first strip part is moved relative thereto until a first portion of said first strip part having a density equal to said predetermined reference density of said first reference density part is adjacent said first reference density part, a first value indicative of said degree of exhaustion of said photographic processing solution being indicated by a point on said first scale adjacent said first portion of said first strip part; further whereby

said second strip part is placed under said second transparent part of said second window and moved relative thereto until a second portion of said second strip part having a density equal to said second predetermined reference density is adjacent said middle section of said second reference density part so that a second value on said second scale adjacent said second portion can be determined.

4,375,032

TRANSACTION PROCESSING SYSTEM

Yasuo Uchida, Takatsuki, Japan, assignor to Omron Tateisi Electronics Co., Kyoto, Japan

Filed Feb. 5, 1981, Ser. No. 231,845

Claims priority, application Japan, Feb. 7, 1980, 55-15070

Int. Cl.³ G06K *5/00;* **H04Q** *3/00*

U.S. Cl. 235—380 **3 Claims**

1. A transaction processing system including a terminal machine for automatic cash transactions initiated with record media inserted by user, comprising:

means for reading data on said record media inserted by users,

means for storing data representative of unvalid record media,

means for comparing said read data to said stored data,

means for delaying said transactions by a predetermined time period sufficient to provide notification of invalidity

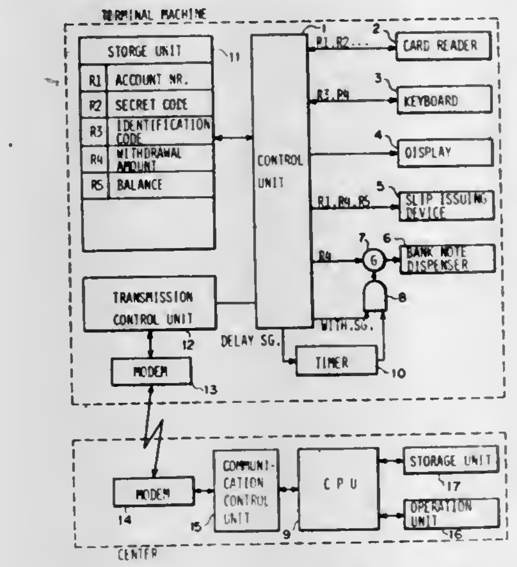

when said comparing means has detected that said read data is related to said stored data, and means for completing the cash transactions whether or not there is a delay.

4,375,033

UNIVERSAL DETECTOR FOR ATOMIC AND MOLECULAR BEAMS

John E. Bjorkholm, Holmdel, and Jonathan C. White, Lincroft, both of N.J., assignors to Bell Telephone Laboratories, Incorporated, Murray Hill, N.J.

Filed Mar. 9, 1981, Ser. No. 241,718

Int. Cl.³ G01D *18/00;* **G12B** *13/00;* **B01D** *59/44;* **H01J** *49/40*

U.S. Cl. 250—251 **6 Claims**

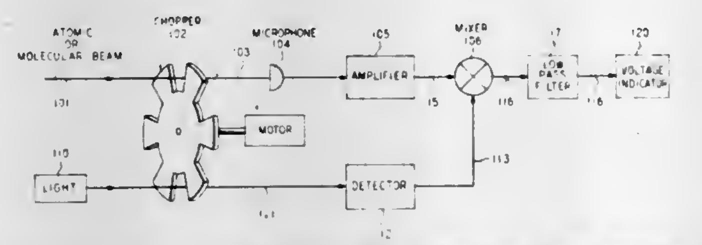

1. Apparatus for detecting the presence of an atomic or molecular beam comprising chopper means for interrupting said atomic or molecular beam at a predetermined rate in order to produce a spatially modulated beam, microphone means having an electrical output and a pressure-sensitive surface that is oriented to receive said spatially modulated beam, means for detecting the presence of energy in said electrical output at a frequency corresponding to said predetermined rate.

4,375,034

PASSIVE INFRARED INTRUSION DETECTION SYSTEM

John K. Guscott, Lynnfield, Mass., assignor to American District Telegraph Company, New York, N.Y.

Filed Jul. 28, 1980, Ser. No. 173,124

Int. Cl.³ G01J *1/00*

U.S. Cl. 250—342 **26 Claims**

1. A passive infrared intrusion detection system comprising:

a mirror assembly including a focusing mirror having a focal length providing a relatively narrow field of view in a first plane; and

at least one mirror having a two dimensional surface selectively curved along one of the dimensions of the surface only and cooperative with the focusing mirror to provide a relatively large field of view in a second plane transverse to the first plane; and

a detector disposed at the focus of the focusing mirror and operative to provide electrical signals in response to and

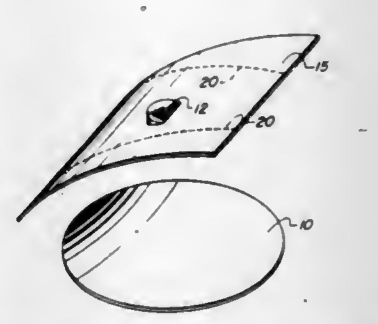

representative of radiation received from the fields of view.

4,375,035

TETRAHEDRAL WINDMILL

Theodore O. Groeger, 2 Collamore Cir., West Orange, N.J. 07052

Filed Apr. 3, 1981, Ser. No. 251,006

Int. Cl.³ F03B *3/14;* **F03D** *7/02, 11/02, 11/04*

U.S. Cl. 290—55 **16 Claims**

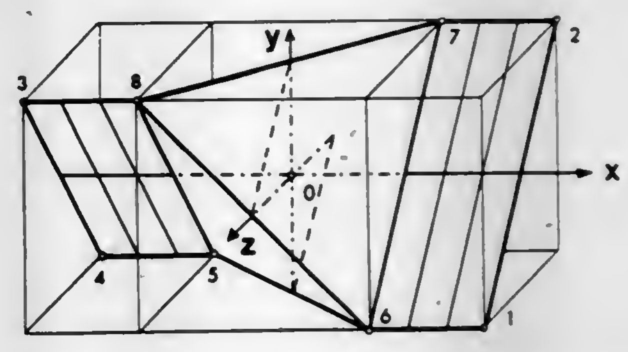

1. An adjustable reaction turbine comprising: (a) a tetrahedral support structure whose opposite edges are of equal length; (b) at least one blade extending into opposite edges of said structure; (c) an axis of rotation pivotally and/or torsionally attached to said structure's center and extending to a load and (d) adjustable means for moving said axis toward the center of any of the tetrahedral edges, whereby said turbine's speed and/or direction of rotation is changed.

4,375,036

KEYBOARD STROBE GENERATION SYSTEM

Robert C. Miller, Braintree, and David B. O'Keefe, Westford, both of Mass., assignors to Honeywell Information Systems Inc., Waltham, Mass.

Filed Jun. 9, 1980, Ser. No. 157,748

Int. Cl.³ H03K *17/56, 5/00*

U.S. Cl. 307—247 A **6 Claims**

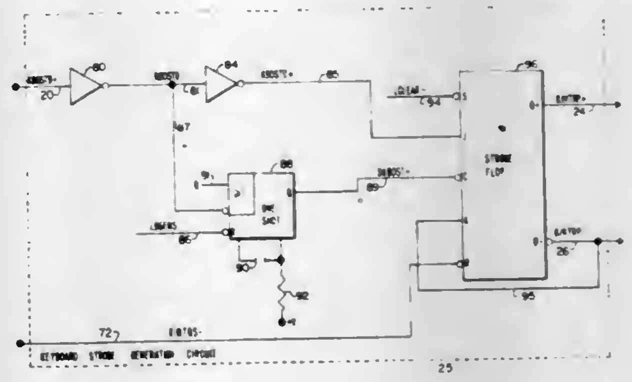

1. A strobe generator for generating an output strobe signal in response to an input strobe signal, said output strobe signal

indicating to a utilization device when valid keyboard generated information may be sampled, said strobe generator comprising:

(a) a retriggerable circuit means having a fourth data input for receiving a filtered input strobe signal derived from said input strobe signal, said retriggerable circuit means for producing a clocking signal at a third data out of said retriggerable circuit means a predetermined period of time after any noise transition in said input strobe signal subsides; and

(b) a JK flip-flop having a first data input, a second data input, a clock input, a first data output and a reset input, said first data input coupled to receive said filtered input strobe signal, said clock input coupled to said third data output of said retriggerable circuit means to receive said clocking signal, said second data input coupled to said first data output, said JK flip-flop for producing an output strobe signal at said first data output wherein said output strobe signal is in a second state when said JK flip-flop is in a first state and in a first state when said JK flip-flop is in a second state and wherein said JK flip-flop transitions from said second state to said first state to indicate that said keyboard generated information may be sampled, said reset input for receiving a reset signal for resetting said JK flip-flop to said second state after said utilization device has sampled said keyboard generated information.

4,375,037
RECEIVING CIRCUIT
Ichiro Ikushima, Kokubunji, Japan, assignor to Hitachi, Ltd., Tokyo, Japan
Filed Jan. 6, 1981, Ser. No. 222,768
Claims priority, application Japan, Jan. 7, 1980, 55-170
Int. Cl.³ H03K *5/08, 5/153, 5/24*
U.S. Cl. 307—268 **10 Claims**

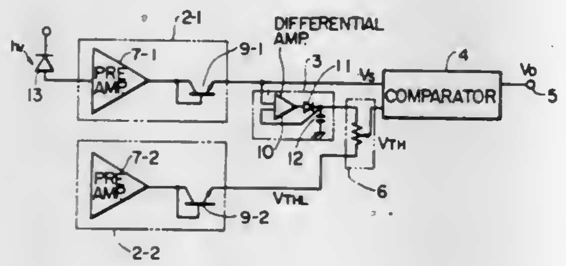

1. A receiving circuit for detecting and regenerating a pulse signal, comprising a preprocessing circuit having a predetermined circuit composition which receives digital signals having low and high amplitude valves as input signals, a reference voltage circuit which produces a reference voltage on the basis of the output signal of said preprocessing circuit, and a comparator circuit which compares the output signal of said preprocessing circuit with said reference voltage for regenerating said digital signals, said reference voltage circuit comprising a peak detector circuit connected to the output of said preprocessing circuit for detecting the maximum value of the output of said preprocessing circuit, means including a reference preprocessing circuit which has the same circuit composition as that of said first-mentioned preprocessing circuit and to which no input signal is applied for producing an output voltage having a predetermined relationship to said low amplitude value of said input signals, and a voltage divider circuit which divides the sum of the output voltage of said peak detector circuit and the output voltage of said reference preprocessing circuit, the divided output of said voltage divider circuit being applied as said reference voltage to said comparator circuit along with the output of said first-mentioned preprocessing circuit.

4,375,038
RMS CONVERTER
John B. Crosby, Yorba Linda, Calif., assignor to Beckman Instruments, Inc., Fullerton, Calif.
Filed Aug. 10, 1979, Ser. No. 65,691
Int. Cl.³ G06G *7/163;* **H03K** *17/74;* **G06G** *7/24*
U.S. Cl. 307—492 **13 Claims**

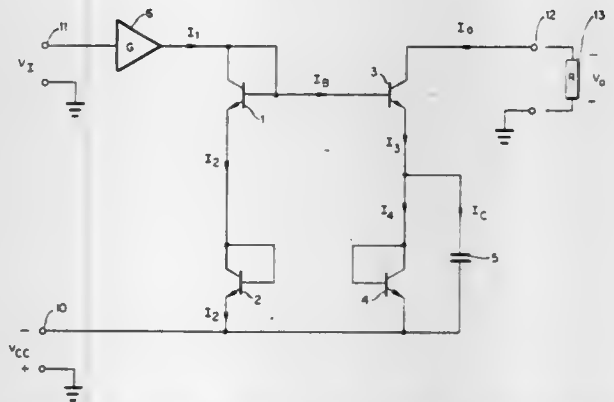

1. An electrical circuit which provides a unidirectional output current whose average value is proportional to the root-mean-square (RMS) value of a time-varying input signal, comprising

an output terminal out of which flows the output current;

a common node;

a rectifying circuit, adapted for receiving the input signal, which includes a current node and which produces a unidirectional current flowing out of the current node whose value is proportional to the absolute value of the input signal;

a voltage source terminal, adapted for connection to a voltage source;

a first transistor whose collector connects to the voltage source terminal and whose base connects to the current node;

a second transistor whose collector connects to the current node and whose base connects to the emitter of the first transistor;

a first semiconductor rectifier connected between the emitter of the second transistor and the common node;

a third transistor whose collector connects to the output terminal and whose base connects to the base of the second transistor;

a second semiconductor rectifier connected between the emitter of the third transistor and the common node; and

a capacitor connected to, and in parallel with, the second semiconductor rectifier.

4,375,039
SENSE AMPLIFIER CIRCUIT
Takahiko Yamauchi, Yokohama, Japan, assignor to Fujitsu Limited, Kanagawa, Japan
Filed Jan. 30, 1980, Ser. No. 116,993
Claims priority, application Japan, Feb. 7, 1979, 54-13061
Int. Cl.³ H03K *5/24, 19/017;* **H03F** *3/45*
U.S. Cl. 307—530 **15 Claims**

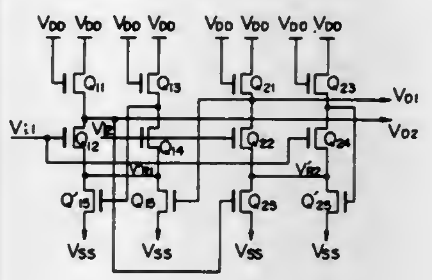

1. A sense amplifier circuit comprising:

first and second differential amplifiers connected to a first power supply line, each comprising means for receiving first and second input signals to said sense amplifier with opposite phases and for supplying first and second output signals with opposite phases;

a first reference transistor connected between the first differential amplifier and a second power supply line and controlled by the first output signal of said second differential amplifier, whose phase is the same as that of said first input signal;

a second reference transistor connected between said second differential amplifier and said second power supply line and controlled by the first output signal of said first differential amplifier, whose phase is the same as that of said second input signal; and

means for providing two output signals from said sense amplifier circuit having opposite phase, each being selected from said first and second output signals of different ones of said first and second differential amplifiers.

4,375,040
BRUSH HOLDER ASSEMBLY
William D. Sauerwein, Westminster, Md., assignor to Black & Decker Inc., Newark, Del.
Filed Aug. 14, 1981, Ser. No. 292,435
Int. Cl.³ H02K *13/00*
U.S. Cl. 310—239 **3 Claims**

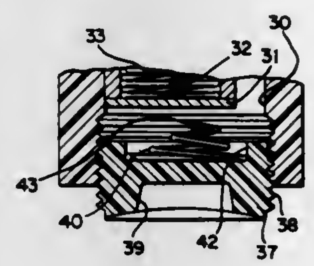

1. A brush holder assembly, comprising: an insulating body portion having an inner end and an outer end and further having a through opening internally threaded at its outer end, the body portion further having an externally-accessible lateral opening communicating with the through opening, an internal shoulder within the body portion adjacent to the lateral opening, a conductive brush insert slidably received within the through opening and having an integrally-formed connecting tab received within the lateral opening and bent over the internal shoulder, thereby precluding axial withdrawal of the insert in one direction away from the body, a brush lead, a quick-connection electrical terminal on one end of the lead, the terminal being slidably received over the tab to make electrical connection to the insert, the connection being disposed substantially within the lateral opening, thereby tending to protect against dirt and contaminants, the brush insert having a longitudinal passageway formed therein, a brush slidably received in the passageway and extending beyond one end of the insert, a shunt cap over the other end of the insert, a shunt between the shunt cap and the brush, an externally-threaded brush cap received within the internally-threaded outer end of the body, the brush cap having an internal blind axial bore formed therein, and a conical biasing spring between the brush cap and the shunt cap, the conical spring having an enlarged end coil portion seated in the blind axial bore of the brush cap, and further having a center portion bearing against the shunt cap, thereby tending to minimize turning movement of the shunt cap as the brush cap is threadably received within the body.

4,375,041
TERMINAL SUBSTRATE FOR A QUARTZ VIBRATING DEVICE
Kimio Aizawa, Nara, and Takashi Nagata, Ikeda, both of Japan, assignors to Matsushita Electric Industrial Co., Ltd., Osaka, Japan
Continuation-in-part of Ser. No. 99,725, Dec. 4, 1979, abandoned. This application Feb. 9, 1982, Ser. No. 347,270
Claims priority, application Japan, Dec. 6, 1978, 53-151515
Int. Cl.³ H01L *41/08*
U.S. Cl. 310—348 **2 Claims**

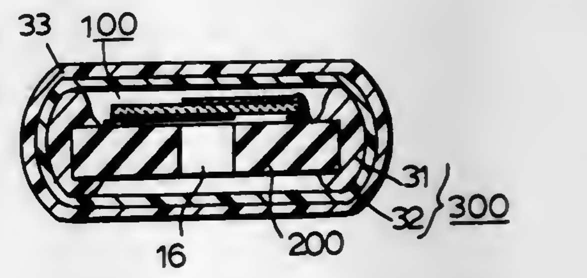

1. A quartz vibrating device comprising:

a terminal substrate having an electrically insulating substrate member having a through-hole therethrough, and a pair of conductors attached on one surface thereof in spaced relation to each other, a quartz vibrating element having a quartz crystal element having a pair of opposed main electrodes attached on opposite major surfaces thereof, and a pair of lead electrodes electrically connected to the respective ones of said pair of main electrodes, said lead electrodes being positioned in positions other than opposed to each other on said quartz crystal element; and the ratio between said through-hole area to said electrode area being from 0.5 to 0.8, said quartz vibrating element being mounted and closely contacted with on said terminal substrate with one of said main electrodes facing said through-hole in said terminal substrate, and said pair of lead electrodes being conductively fixed to the respective pair of conductors on said terminal substate, the connections of said lead electrodes and said conductors constituting the only support for said quartz vibrating element on said terminal substrate, whereby said terminal substrate and said quartz vibrating element are integrally connected, and the range of the fine-frequency adjustment by using said through-hole with the evaporation being from zero to 0.8 percent for the frequency before said evaporation.

4,375,042
TEMPERATURE GRADIENT METHOD OF NONUNIFORMLY POLING A BODY OF POLYMERIC PIEZOELECTRIC MATERIAL AND NOVEL FLEXURE ELEMENTS PRODUCED THEREBY
Michael A. Marcus, Fairport, N.Y., assignor to Eastman Kodak Company, Rochester, N.Y.
Filed Nov. 24, 1980, Ser. No. 209,800
Int. Cl.³ H01L *41/22*
U.S. Cl. 310—357 **12 Claims**

1. A method of nonuniformly poling a body of polymeric piezoelectric material, comprising the steps of:

establishing a temperature gradient of greater than about 10° C. and less than about 100° C., the lower temperature being greater than the glass transition temperature of the material and the higher temperature being less than the

melting point of the material, across the thickness of the body from one surface to another to thereby create a colder surface and a warmer surface; and applying an electric field across the thickness of the body in an amount and for a time sufficient to polarize a portion of the body near said colder surface more strongly than a portion of the body near said warmer surface.

4,375,043
SYSTEM FOR FIXING STATOR WINDING BARS OF A DYNAMO-ELECTRIC ROTATING MACHINE
Gillet Roger, Belfort, France, assignor to Alsthom-Atlantique and Electricite de France, both of Paris, France
Filed Aug. 6, 1981, Ser. No. 290,636
Claims priority, application France, Aug. 7, 1980, 80 17445
Int. Cl.[3] H02K *3/47*
U.S. Cl. 310—258 **4 Claims**

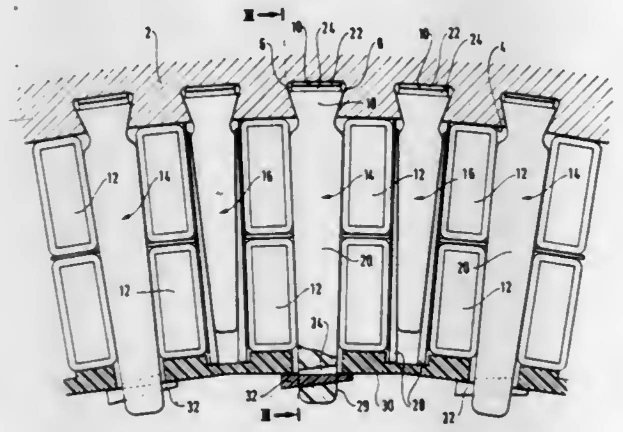

1. A fixing system for fixing stator winding bars of a dynamo-electric rotating machine having a rotor and a stator, and said stator having a magnetic circuit with an inner surface that is generally cylindrical about the axis of rotation of the rotor, said system serving to fix said bars in the gap between the rotor and the stator magnetic circuit, said bars extending in a "longitudinal" direction parallel to the axis of rotation of the rotor, and being fixed by being pressed against said inner surface of the stator magnetic circuit; said fixing system comprising:
non-metal fixing teeth which are generally prismatic with longitudinal generator lines, said teeth each having a foot fixed to the stator magnetic circuit and a body which protrudes radially inwards from the inner surface of said magnetic circuit, said teeth being spaced out angularly all around said inner surface;
tangential wedges wedging the winding bars between the bodies of the angularly adjacent teeth; and
radial wedges to prevent radial movement of said winding bars relative to the bodies of said teeth by pressing said bars against the inner surface of the stator magnetic circuit;
the improvement wherein the angularly adjacent fixing teeth are alternately long and short with only the long teeth having heads that protrude radially inwards beyond said winding bars;
said tangential wedges of the bars being radially driven outwards and each being inserted between winding bars and the side of one tooth to clamp each of said bars between a tangential wedge and the side of the other tooth;
said radial wedges being parallel to said bars having plates fixed to the heads of only the long teeth, which plates extend tangentially between said long tooth heads and pressing radially outwards against the surfaces of said winding bars disposed between said long teeth.

4,375,044
LOW THERMAL STRESS ELECTRODE
Eric M. Ek, Tucson, Ariz., assignor to The United States of America as represented by the Secretary of the Army, Washington, D.C.
Filed Mar. 23, 1981, Ser. No. 246,785
Int. Cl.[3] H01J *25/34, 23/02*
U.S. Cl. 315—5.38 **9 Claims**

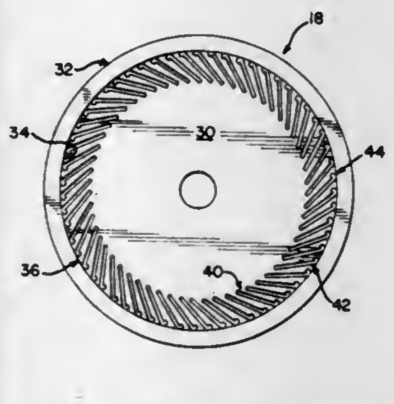

1. A traveling wave tube having means for supplying a beam to one end of the tube and a collector which receives said beam at an opposite end of said tube said collector comprising a metal electrode having a ceramic insulator secured to the periphery thereof and stress-relief means for said electrode including a plurality of spaced substantially planar primary slots extending from the periphery of said metal electrode, with planes offset from the center of said metal electrode, and secondary slots extending from at least one edge of said primary slots.

4,375,045
STARTING TRANSFORMER FOR GAS LAMPS WITH OPEN SECONDARY
Marvin G. Yim, 27305 Rainbow Ridge Rd., Palos Verdes Peninsula, Calif. 90274
Filed Sep. 29, 1981, Ser. No. 306,725
Int. Cl.[3] H05B *37/02*
U.S. Cl. 315—209 R **1 Claim**

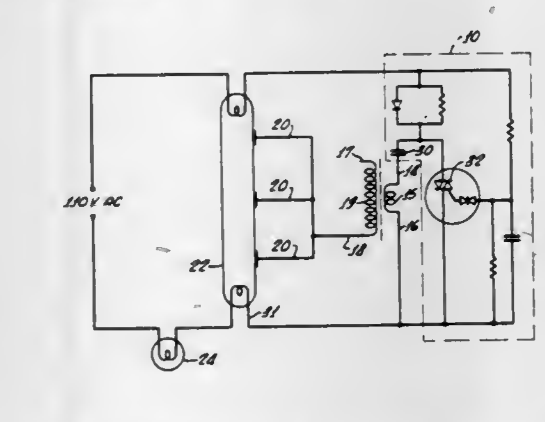

1. A starting apparatus for an A-C line operated gas lamp comprising:
A transformer having a high voltage secondary and a low voltage primary winding placed about the outer circumference of said secondary winding;
a proximity electrode;
means for connecting one end of said secondary winding to said proximity electrode; and
means for insulating the other end of said secondary winding from both sides of the A-C line.

4,375,046
NETWORK AND METHOD FOR CORRECTING VERTICAL NON-LINEARITY AND MIS-CONVERGENCE IN A TELEVISION PROJECTION SYSTEM
Stanley E. Lehnert, Addison, Ill., assignor to Zenith Radio Corporation, Glenview, Ill.
Filed Mar. 16, 1981, Ser. No. 244,369
Int. Cl.[3] H01J *29/70, 29/76*
U.S. Cl. 315—368 **10 Claims**

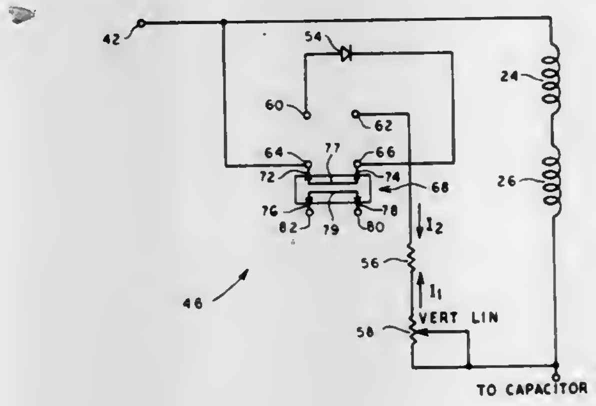

1. For use with a color television projection system having three CRTs and three corresponding vertical deflection yokes, a method of correcting for vertical non-linearity and mis-convergence in the system's projected image, comprising:
adjusting the height of the projected image such that one end thereof is properly converged at a desired vertical height, and the opposed end thereof is stretched beyond a desired vertical size;
reducing the current in the deflection yoke of each CRT which develops a portion of the vertically stretched image such that the stretched portion of the image is compressed to the desired vertical height and the electron beams of the three CRTs are vertically converged.

4,375,047
TORQUE COMPENSATED ELECTRICAL MOTOR
Virgil W. Nelson, and William L. Carlson, Jr., both of St. Cloud, Minn., assignors to General Signal Corporation, Stamford, Conn.
Filed Jul. 23, 1981, Ser. No. 286,298
Int. Cl.[3] H02P *5/52*
U.S. Cl. 318—48 **17 Claims**

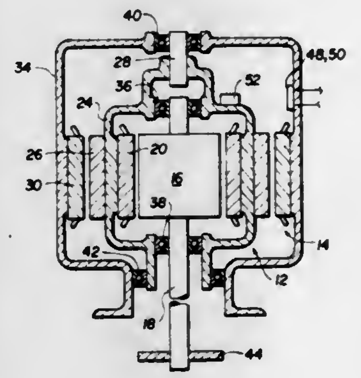

1. A torque compensated electric motor comprising:
a housing;
a cage;
a post mounted to and extending interior said housing;
a first bearing interconnecting a first end of said cage and said post so that said cage rotates about said post;
a second bearing interconnecting the exterior of the second end of said cage and the interior of said housing;
a first stator mounted to the interior of said cage;
an output shaft extending from said housing and said second end of said cage and rotatably mounted to the interior of said cage;
a first rotor mounted to said output shaft interior and axially aligned with said first stator;
a second rotor mounted to the exterior of said cage;
a second stator mounted to the interior of said housing concentric to said second rotor;
means for measuring the reaction torque experienced by said first stator; and
control means for providing a control signal to said second stator as a function of said measured torque to produce a counter-torque in said second rotor to balance the reaction torque experienced by said first stator.

4,375,048
PROGRAMMABLE TIME SWITCH
Aksel Jespersen, Sonderborg, and Peter A. Eriksen, Nordborg, both of Denmark, assignors to Danfoss A/S, Nordborg, Denmark
Continuation of Ser. No. 53,105, Jun. 28, 1979, abandoned. This application Nov. 14, 1980, Ser. No. 208,808
Claims priority, application Fed. Rep. of Germany, Jul. 11, 1978, 2830368
Int. Cl.[3] H02P *5/16*
U.S. Cl. 318—484 **1 Claim**

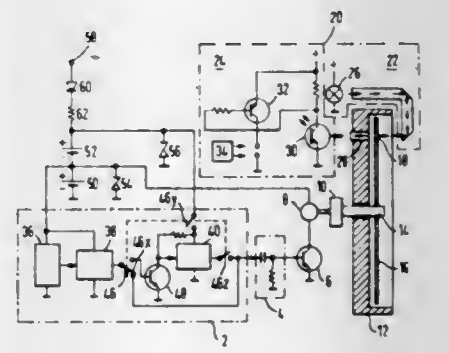

1. A time switch assembly, comprising, an electric stepping motor, a pulse generator, drive means for driving said motor at predetermined selected speeds corresponding to the frequency of said pulse generator, means providing single speed gearing between said motor and said time plate means, said drive means including a fixed frequency oscillator and first and second counters in series, said first counter being matched to said oscillator to have an output frequency related specifically to said speed gearing, said second counter having a divide by seven factor, and switching means between said counters to provide selectable bypassing of said second counter wherein said first counter acting alone drives said time plate through said single speed gearing at one revolution per day and said counters acting together drive said plate at one revolution per week.

4,375,049
STEPPING MOTOR DRIVE CIRCUIT FOR BI-DIRECTIONAL ROTATION
Paul Grand Chavin, Besancon, France, assignor to Timex Corporation, Waterbury, Conn.
Filed Sep. 24, 1980, Ser. No. 190,157
Int. Cl.[3] H02K *29/00*
U.S. Cl. 318—696 **7 Claims**

1. An improved electrical drive circuit for a reversible stepping motor of the type having a coil and stator providing a magnetic circuit for a magnetized rotor having first poles adapted to cooperate with said magnetic circuit when electrical pulses are supplied from a voltage source, said circuit having means providing pulses of predetermined polarity and frequency to said coil for pre-determined intervals to step the rotor in forward or reverse direction, said rotor having second poles adapted to lock the rotor in stable equilibrium positions

between steps when the coil is not activated, such stable positions being located such that less energy is required to step the rotor forward than in reverse; the improvement in said drive circuit comprising:

a switching circuit adapted to provide a reverse switching cycle comprised of a first pulse portion initiating rotation in a forward direction and a second pulse portion applied

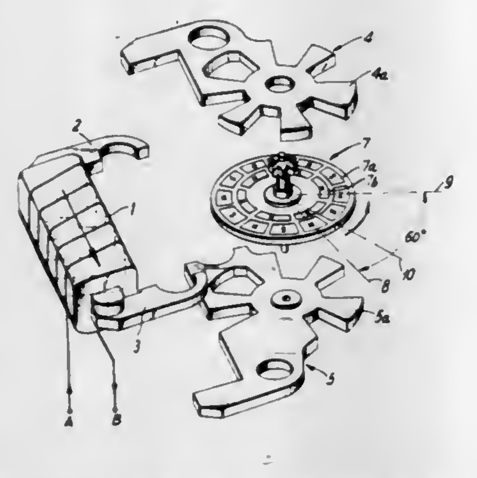

at a predetermined time during rotation so as to cause a reverse electromagnetic torque to reverse rotation and move it in the opposite direction, at least one of said pulse portions comprised of a high frequency pulse train of pulses of the same polarity of those normally used to turn the rotor in the forward direction and of sufficiently high frequency to reduce the current which would otherwise flow through said coil.

4,375,050
PORTABLE AUTOMATIC MULTIPLE TEST SYSTEM FOR MULTI-PAIR CABLES
Ronald C. Helgerson, 4939 SE. 140th, Portland, Oreg. 97236
Filed Aug. 27, 1980, Ser. No. 181,937
Int. Cl.³ G01R *31/02*
U.S. Cl. 324—51 8 Claims

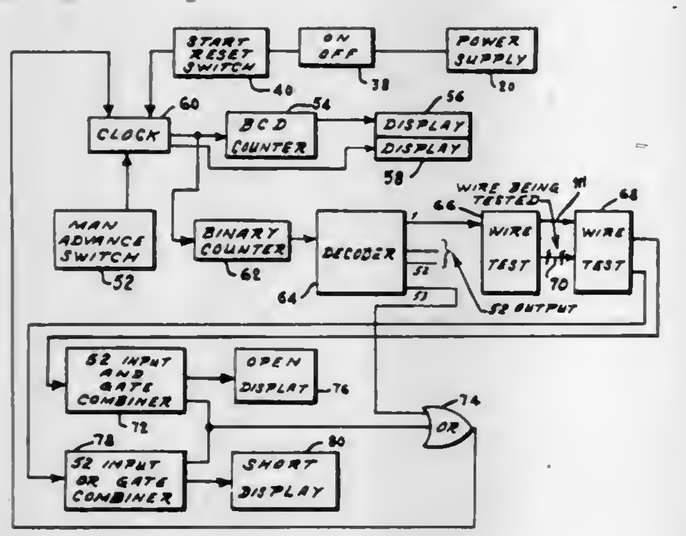

1. A portable multi-pair cable tester for automatically and sequentially testing wires of said cable, said tester comprising:

driver means for outputting a controlled sequence of pulses upon receiving electrical power;

overide means for effecting continued sequential testing after said tester determines a short or an open circuit condition in any one of said wires connected to said driver means;

first display means for displaying a number corresponding to a wire pair under test, said first display means including a BCD counter connected to said driver means, a multi-digit display driven by said BCD counter for indicating which of said wire pairs is under test, and a pair of LEDs connected to said driver means for indicating whether a wire under test is a tip or ring;

counting means for counting the controlled sequence of pulses from said driver means, said counting means connected for outputting a plurality of coded signals;

decoding means for decoding the plurality of coded signals and connected for outputting of pulses, said decoding means connected to said counting means and outputting a sequential pulse to each of said wires under test of said multi-pair cable, said decoding means upon completing testing of all wires of said cable outputting a clock stop pulse;

test means for testing wires of said multi-pair cables having connectors on each end of said cable to said test means, said test means including an input wire test circuit having drivers and inverters therein connected between said decoding means and one end of said cable, and an output wire test circuit having gates connected to the opposite end of said cable and to said input wire test circuit;

combining means connected to said output wire test circuit, said combining means includes a first combiner for outputting a pulse in response to a short circuit condition and a second combiner for outputting a pulse in response to an open circuit condition;

second display means for displaying open and short circuit condition connected to said combining means; and

gate means for receiving the clock stop pulse of said decoding means and said combining means, and outputting a stop pulse to said driver means when said tester has determined an open or short circuit condition and when said testing has been completed.

4,375,051
AUTOMATIC IMPEDANCE MATCHING BETWEEN SOURCE AND LOAD
C. Earle Theall, Weston, Conn., assignor to The Perkin-Elmer Corporation, Norwalk, Conn.
Filed Feb. 19, 1981, Ser. No. 235,784
Int. Cl.³ H03H *7/40*
U.S. Cl. 333—17 M 17 Claims

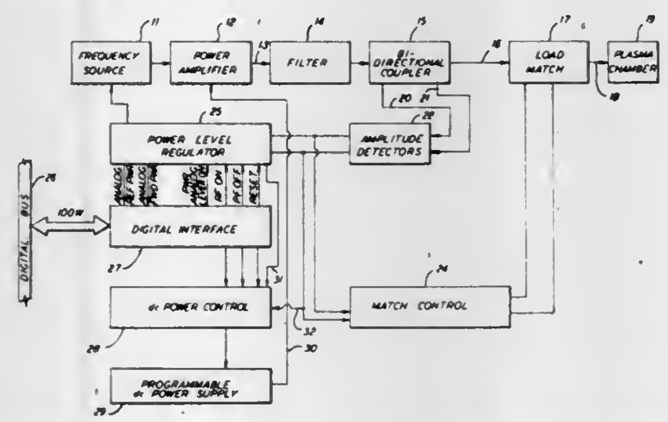

1. A system for supplying R.F. power to a load, comprising;

R.F. power source means,

load match circuit means connected between said R.F. power source means and the load,

said load match circuit means comprising;

first and second variable capacitors together with an inductance forming a tank circuit and first and second reversible stepping motors connected to said first and second variable capacitors, respectively, for varying the capacitance of each;

bi-directional coupler means connected between said R.F. power source means and said load match circuit means for providing voltage outputs proportional to forward and reflected power;

control circuit means connected to receive said outputs from said bi-directional coupler means proportional to forward and reflected power and connected to said load match circuit means for energizing said first and second motors to vary said first and second capacitors to cause apparent load impedance to automatically match the surge impedance of said transmission line means to reduce reflected power substantially to zero regardless of variations of load impedance,

said control circuit means comprising;

first circuit means connected to said first motor for driving said first motor in a first or second direction,

second circuit means connected to said second motor for driving said second motor in a first or second direction,

first logic circuit means connected to said first and second circuit means for driving said first and second motors only in a direction for reducing the voltage from said bi-directional coupler means proportional to said reflected power,

second logic circuit means connected to said first and second circuit means for periodically selecting one of said first and second motors to be energized,

a pulse generator providing first, second, third and fourth pulses periodically,

said second logic circuit comprising,

a first flip-flop connected to said first and second circuit means,

counter means connected between said generator means and said first flip-flop causing said first flip-flop to change states after said fourth pulse has occurred a predetermined number of times for selecting said first or second motors to be energized in accordance with the state of said first flip-flop.

4,375,052
POLARIZATION ROTATABLE ANTENNA FEED
Tore N. Anderson, Brookfield Center, Conn., assignor to Microdyne Corporation, Ocala, Fla.
Filed Jul. 11, 1980, Ser. No. 168,666
Int. Cl.³ H01P *1/165*
U.S. Cl. 333—21 A 9 Claims

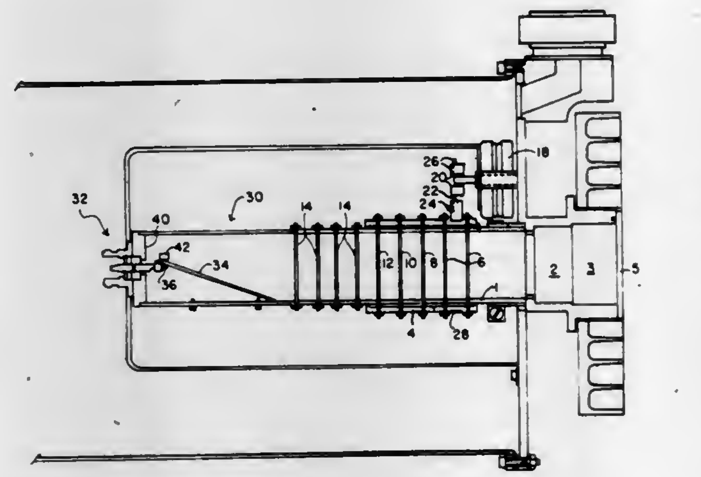

1. An antenna feed assembly for selectively rotating an incoming wave in one or another direction about the axis of said feed comprising,

a circular wave guide comprising

an elongated hollow tube having an end for passing electromagnetic radiation,

a first plurality of stationary conductive pins extending across a diametrical dimension of said hollow tube,

a second plurality of conductive pins extending across a diametrical dimension of said hollow tube,

said second plurality of pins being rotatable about the axis of the elongated dimension of said hollow tube,

means for rotating said second plurality of pins between two extreme positions lying at equal angles on opposite sides of a plane including said first plurality of pins such that each of said pins of said second plurality of pins lie at equal angles other than zero relative to one another with at least one of said second plurality of pins remote from said first plurality of pins located at ±45° relative to said plane.

4,375,053
INTERLEVEL STRIPLINE COUPLER
Raymond D. Viola, Oyster Bay, and Gerard L. Hanley, Melville, both of N.Y., assignors to Sperry Corporation, New York, N.Y.
Filed Dec. 29, 1980, Ser. No. 220,227
Int. Cl.³ H01P *5/18*
U.S. Cl. 333—116 7 Claims

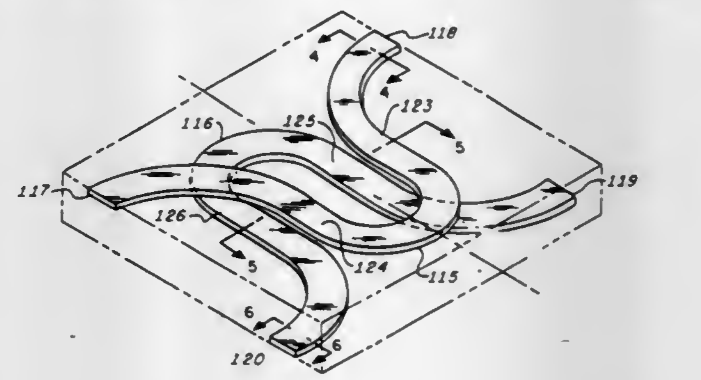

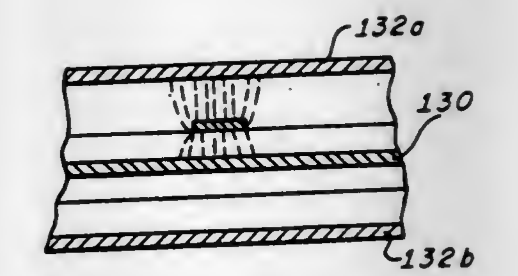

1. An apparatus for coupling signals between levels of multilevel stripline circuits comprising:

first and second ground planes having a region therebetween divided into three sections, a middle section, and two outer sections with first and second boundaries between said middle section and said two outer sections;

a first metallic inner conductor of horseshoe shape positioned at said first boundary, having an arcuate section, an open end, and first and second ports on either side of said open end respectively coupled to first and second metallic strip conductors at said first boundary;

a second metallic inner conductor of horseshoe shape positioned at said second boundary in an energy coupling relationship with said first horseshoe shaped inner conductor, having an arcuate section, an open end, and third and fourth ports on either side of said open end respectively coupled to third and fourth metallic strip conductors at said second boundary, said arcuate section and said open end of said second horseshoe shaped inner conductor respectively facing said open end and said arcuate section of said first horseshoe shaped inner conductor to position said first and third ports and said second and fourth ports with electrical distances therebetween; and

first metallic means positioned substantially equidistant between said first and second ground planes and located in regions external to areas covered by said first and second horseshoe shaped inner conductors for providing common ground planes for strip conductors at said first and second boundaries to establish a first half height asymmetric stripline and a second half height asymmetric stripline.

4,375,054
SUSPENDED SUBSTRATE—3 dB MICROWAVE QUADRATURE COUPLER
Anthony M. Pavio, Plano, Tex., assignor to Rockwell International Corporation, El Segundo, Calif.
Filed Feb. 4, 1981, Ser. No. 231,570
Int. Cl.³ H01P *5/18*
U.S. Cl. 333—116 **2 Claims**

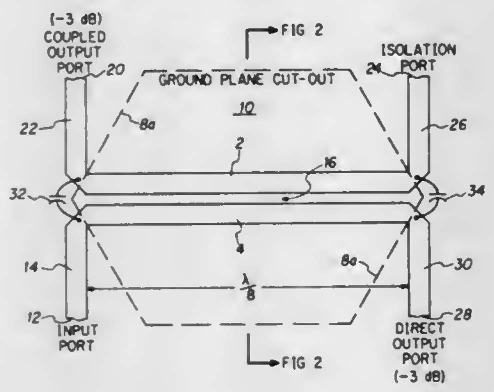

1. A compact, reduced length microwave 90° quadrature −3 dB coupler comprising:
a dielectric substrate;
a ground plane on the bottom of said substrate;
microstrip conductor ports on the top of said substrate and connected to a pair of spaced parallel coplanar conductor lines separated by a coupling gap having a length of one eighth wavelength and juxtaposed a cut-out region of said ground plane therebelow such that said coplanar conductor lines are balanced and coupled to each other, said substrate being suspended within a mounting case such that the coplanar conductor lines remain balanced to each other without ground plane coupling to said mounting case and said coupling gap and the width of the conductor lines being selected so that the even mode impedance is very large and much greater than the characteristic impedance and so that the odd mode impedance is substantially equal to the characteristic impedance; and
a pair of capacitors coupling the conductor lines at the ends thereof, said capacitors each providing a reactance substantially equal to the characteristic impedance,
whereby said coupling gap can be made relatively wide and said conductor lines can be made substantially less than one quarter wavelength in length.

4,375,055
DEVICE FOR ARTICULATING A MOVING BLADE PIVOTING ON ITS BASE AND A SWITCH WHICH COMPRISES SUCH A DEVICE
Gerard Holvoet, and Jacques Legrand, both of Quai Leon Blum, France, assignors to Socapex, France
Filed Mar. 18, 1981, Ser. No. 245,173
Claims priority, application France, Mar. 26, 1980, 80 06688
Int. Cl.³ H01H *1/08*
U.S. Cl. 335—56 **11 Claims**

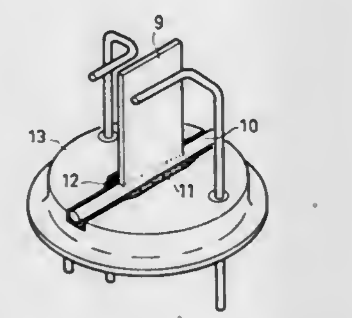

1. A device for the articulation of a moving blade, whose plane pivots in an angular manner on its base, wherein the moving blade is fixed to a float floating on a liquid contained in a cavity in which it is held by capillarity and which is made in the base, the nature of the float material and its dimensions being such that the hydrostatic buoyancy which is exerted by the liquid is equal to or exceeds the weight of the mobile assembly constituted by the float, the moving blade and the liquid film wetting the said blade, the equilibrium of the force ensuring that the articulation operates independently of its position in space.

4,375,056
THIN FILM RESISTANCE THERMOMETER DEVICE WITH A PREDETERMINED TEMPERATURE COEFFICENT OF RESISTANCE AND ITS METHOD OF MANUFACTURE
Ronald D. Baxter, and Paul J. Freud, both of Furlong, Pa., assignors to Leeds & Northrup Company, North Wales, Pa.
Filed Feb. 29, 1980, Ser. No. 126,068
Int. Cl.³ H01C *3/04*
U.S. Cl. 338—25 **5 Claims**

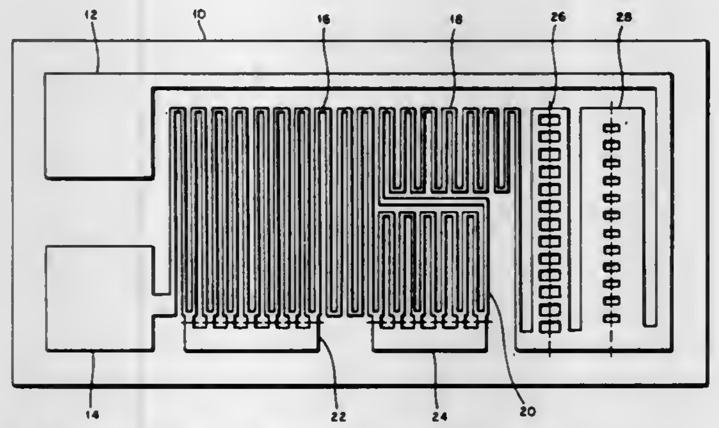

1. A resistance thermometer element comprising:
an electrically insulating substrate; and
a thin platinum film deposited on said substrate in a pattern to produce a desired ice point resistance with the film being of a thickness between 0.05 and 0.8 microns purity and perfection such that its bulk TCR is substantially above the desired TCR.

4,375,057
POSITION SENSOR
Andrew P. Weise, Hebron, and George R. Wisner, Deep River, both of Conn., assignors to Otis Elevator Company, Farmington, Conn.
Filed Dec. 10, 1980, Ser. No. 215,205
Int. Cl.³ B66B *3/02;* **G01S** *1/24*
U.S. Cl. 340—21 **3 Claims**

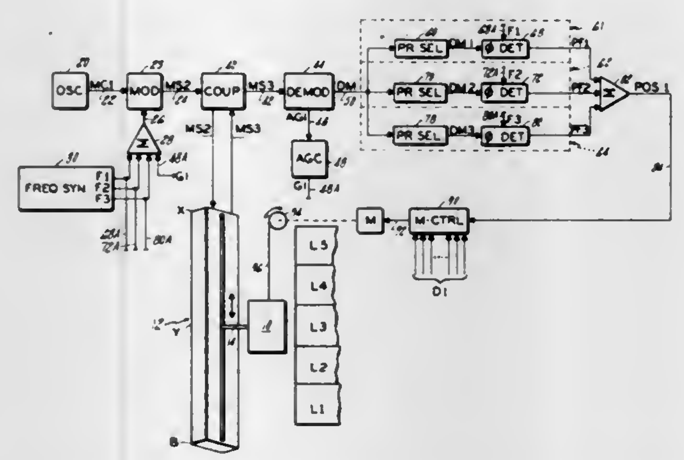

1. Apparatus for sensing the distance to an object, characterized by:
a microwave signal source,
a contained medium for propagating microwave signals along its length, said medium including a reflector member along the length of the medium for reflecting the signals back, and
detection means responsive to input signals for providing an output signal which reflects the phase difference between said input signal and a reference signal,
said signal from said microwave source being applied to said medium, said input signal being a signal reflected back from the reflector member and said reference signal being said microwave signal, the object being connected to said reflector member, and
said microwave source comprising means for providing a microwave signal comprising at least first and second modulated signals, the modulating frequency of one of said signals being such that its period, for one cycle, equals the round trip transmission time for the carrier for the maximum distance to be measured and the modulation frequency of the second frequency being higher than said first frequency,
said detection means comprising means responsive to an input signal comprising said second signal for providing a demodulation signal reflecting the modulated portion, if any, of said input signal, means for providing a first distance indicating signal reflecting the phase difference between said demodulation signal and a first reference signal having the same frequency as said first modulation signal, means for providing a second distance indicating signal reflecting the phase difference between said demodulation signal and a reference signal having the same frequency as said second modulation signal, and for providing a signal reflecting the sum of the distances associated with said distance signals.

4,375,058
DEVICE FOR READING A PRINTED CODE AND FOR CONVERTING THIS CODE INTO AN AUDIO SIGNAL
Herman Bouma; Dominicus G. Bouwhuis; Paulus M. Boers, and Josephus C. Jacobs, all of Eindhoven, Netherlands, assignors to U.S. Philips Corporation, New York, N.Y.
Filed Jun. 6, 1980, Ser. No. 157,133
Claims priority, application Netherlands, Jun. 7, 1979, 7904469
Int. Cl.³ G06K *7/10;* **G10L** *1/00*
U.S. Cl. 340—146.3 Z **8 Claims**

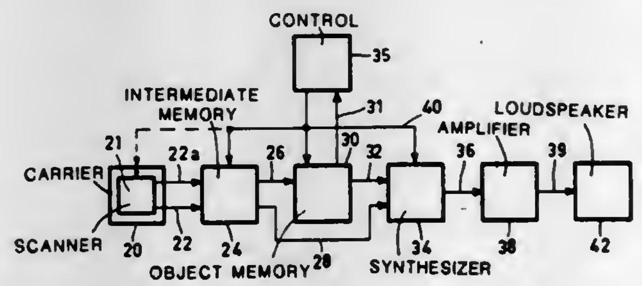

1. A device for generating audio signals on the basis of printed code representations that are present on a visually selectable zone of the surface of a carrier, said device comprising:
(a) first means, suitable for manipulation, for the selective and optical scanning of said zone and for deriving code signals from the code representations present in said zone;
(b) second means, including an intermediate memory having a data input which is connected to an output of the first means, for receiving and processing said code signals and for developing reproduction control signals therefrom;
(c) within said second means a synchronization mechanism for deriving synchronization signals from the signals of the code representations and for controlling the storage of code signals in the intermediate memory by means of these synchronization signals;
(d) clock means within said second means for controlling the reading of code signal information stored in the intermediate memory and for presenting these code signals on an output of the second means,
(e) third means having an input connected to an output of the second means for receiving therefrom control signals, for the sequential actuation of acoustic generator means included in said third means.

4,375,059
FAST CHARGE TRANSFER ANALOG-TO-DIGITAL CONVERTER
Eugene S. Schlig, Somers, N.Y., assignor to IBM Corporation, Armonk, N.Y.
Filed Apr. 25, 1980, Ser. No. 143,704
Int. Cl.³ H03K *13/08*
U.S. Cl. 340—347 AD **13 Claims**

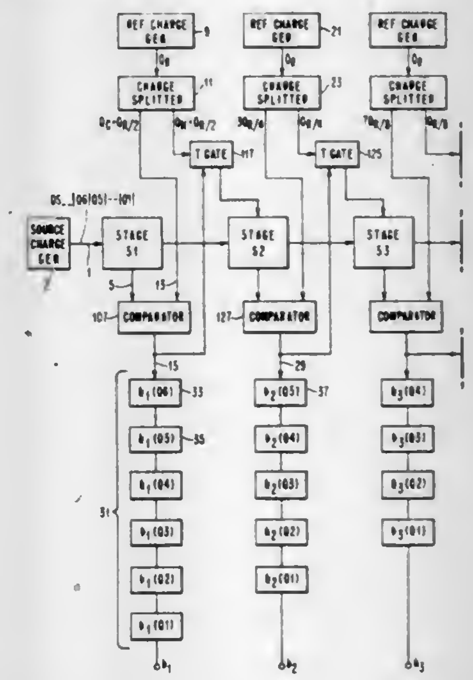

1. An analog-to-digital converter for generating a digital word having a plurality of binary bits defining the magnitude of a charge packet, comprising:
a pipeline register having an input end for receiving a serial stream of source charge packets and having serially connected register electrodes for serially passing the charge packets to an output end; and
a plurality of digitizing stages arranged at serial locations along said pipeline register, each stage operatively associated with at least one particular register electrode of the pipeline register for comparing a source charge stored under the electrode to a first fixed reference charge for the electrode and generating a binary bit in accordance with the result of the comparison, each stage having transfer means for summing the compared source charge and a second fixed reference charge for the electrode if a particular binary bit is generated for the electrode and for storing the charge sum under a successive register electrode of the pipeline register and for transferring the compared source charge alone to said successive register electrode if another particular binary bit is generated.

4,375,060
ELECTRONIC APPARATUS HAVING SPECIAL KEY
Sakae Horyu, Yokohama, Japan, assignor to Canon Kabushiki Kaisha, Tokyo, Japan
Filed May 20, 1980, Ser. No. 151,700
Claims priority, application Japan, May 26, 1979, 54-64583
Int. Cl.³ G06F *3/02;* **H04L** *15/00*
U.S. Cl. 340—365 R **5 Claims**
1. An electronic apparatus comprising:
a plurality of data input keys for entering data;
storage means for storing data;

transmitting means for transmitting directly the data entered by way of said data input keys, and for transmitting from said storage means the data stored therein;
recording means for recording directly the data entered by way of said data input keys, and for recording from said storage means the data stored therein;
a first selection key for entering a selection signal;
holding means for storing said selection signal;
means responsive to said selection signal stored in said hold-

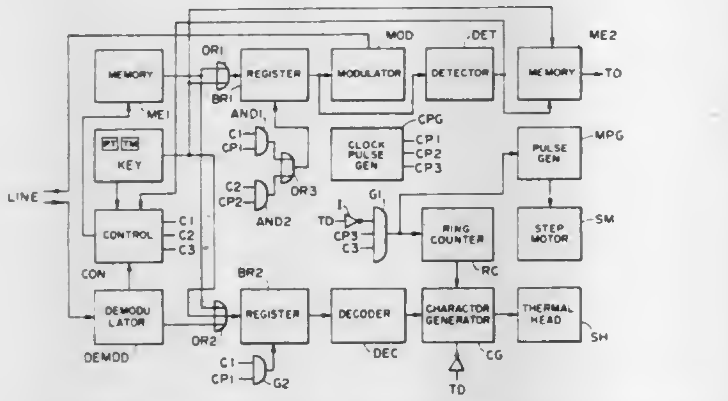

ing means for activating said transmitting means and for inhibiting activation of said recording means, such that in response to said stored selection signal said transmitting means transmits said data stored in said storage means but said recording means does not record said data from said storage means; and
reset means for resetting said holding means to a state in which said selection signal is not being stored when the transmission of the data from said storage means is completed.

4,375,061
DIGITALLY DRIVEN AUDIO EFFECTS GENERATOR
Daniel J. Shoff, Torrance, Calif., assignor to Mattel, Inc., Hawthorne, Calif.
Filed Dec. 29, 1980, Ser. No. 220,403
Int. Cl.³ G08B *27/00*
U.S. Cl. 340—384 E **10 Claims**

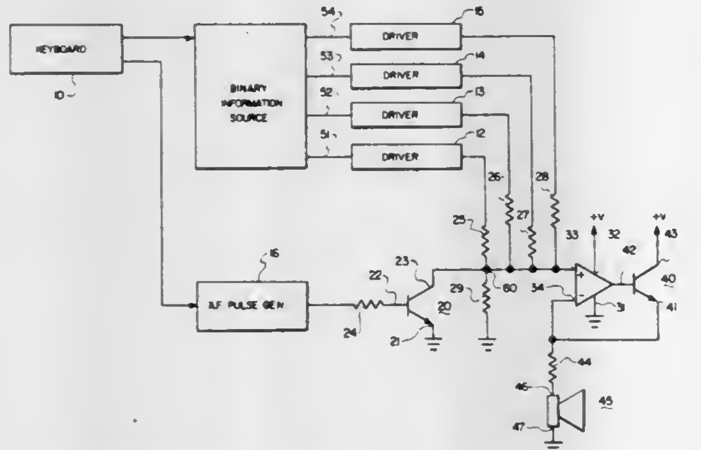

1. A digitally driven audio effects generator comprising:
a source of binary information, providing a binary encoded output signal indicative of a selected amplitude characteristic;
a source of operating potential;
a source of audio frequency signal;
digital to analog conversion means having means for receiving digitally encoded information and means for producing an analog output signal having an amplitude corresponding to said digitally encoded information;
means coupling said source of binary information to said digital to analog conversion means; and
switching means, coupled to said source of audio frequency signal and to said digital to analog conversion means, interrupting said output signal at a rate determined by the frequency of said audio frequency signal.

4,375,062
ASPIRATOR FOR AN INK JET PRINTER
Gary V. Sturm, Lexington, Ky., assignor to International Business Machines Corporation, Armonk, N.Y.
PCT No. PCT/US81/00722, § 371 Date May 29, 1981, § 102(e) Date May 29, 1981
PCT Filed May 29, 1981, Ser. No. 280,953
Int. Cl.³ G01D *15/18*
U.S. Cl. 346—75 **4 Claims**

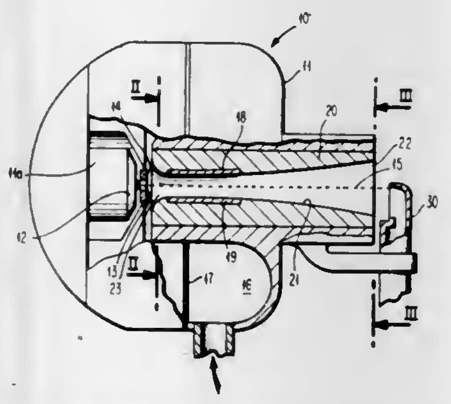

1. An aspirator (**10**) for a continuous stream ink jet printer in which air and ink pass through the aspirator substantially coaxially and at a velocity relative to one another to substantially inhibit the necessity for aerodynamic ink to air velocity correction, said aspirator (**10**) being of the type comprising a tunnel (**20**) having an air and ink stream inlet (**23**) and outlet (**22**), and a bore (**21**) in said tunnel interconnecting said inlet (**23**) and outlet (**24**); said aspirator being characterized in that: said bore (**21**) increases in cross-sectional area from said inlet (**23**) to said outlet (**22**), the axial area gradient being inversely proportional to the intended velocity of air through the tunnel.

4,375,063
RECORDING APPARATUS WITH LASER BEAM
Takashi Kitamura, Yokohama, Japan, assignor to Canon Kabushiki Kaisha, Tokyo, Japan
Filed Jan. 15, 1981, Ser. No. 225,344
Int. Cl.³ G01D *15/04, 15/20*
U.S. Cl. 346—108 **13 Claims**

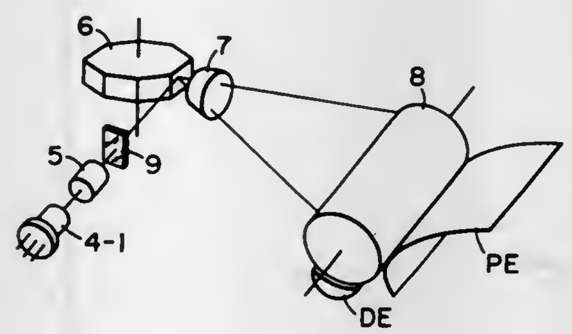

9. An apparatus for recording by use of a laser comprising:
semiconductor laser element means for generating a laser beam the wavelength of which varies in accordance with variation of temperature to which said laser element means is exposed;
photosensitive means positioned to be exposed to the laser beam generated by said semiconductor laser element means and characterized in that its photosensitivity is reduced as the wavelength of the laser beam increases within a range of wavelength variation; and
optical filter means disposed in the path of the laser beam between said semiconductor laser element means and said photosensitive means and having such characteristics that the quantity of laser beam transmitted therethrough increases as the wavelength of the laser beam increases within the range of wavelength variation.

4,375,064
LASER RECORDER
Yuji Ohara, Asaka, Japan, assignor to Fuji Photo Film Co., Ltd., Kanagawa, Japan
Filed Apr. 22, 1981, Ser. No. 256,467
Claims priority, application Japan, Apr. 24, 1980, 54/607
Int. Cl.³ G01D *15/14*
U.S. Cl. 346—108 **5 Claims**

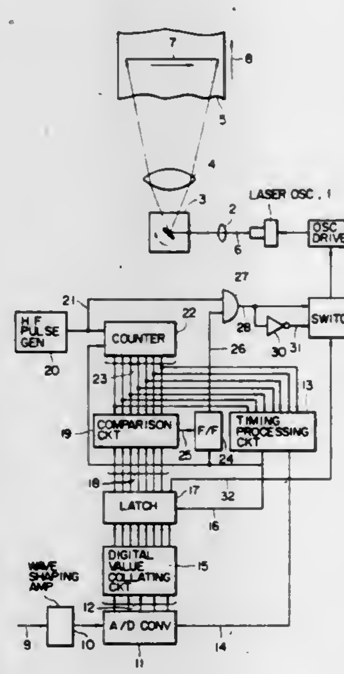

1. A laser recorder comprising means for sampling an input signal with a sampling pulse; means for providing a predetermined number of pulses during a predetermined sampling period, the number of said pulses being controlled according to a level of the sampled input signal, a positive pulse being provided for a low exposure level and a negative pulse being provided for a high exposure level of said input signal; and means for binary modulating a light beam in accordance with said positive pulses and said negative pulses to record an image having half-tones.

4,375,065
LASER RECORDER
Yuji Ohara, Asaka, Japan, assignor to Fuji Photo Film Co., Ltd., Kanagawa, Japan
Filed Apr. 29, 1981, Ser. No. 258,692
Claims priority, application Japan, Apr. 30, 1980, 55-57267
Int. Cl.³ G01D *15/4*
U.S. Cl. 346—108 **7 Claims**

1. A laser recorder comprising: means for sampling an input signal at a predetermined sampling time period, means for producing a first signal in response to the sampled input signal for controlling a number of pulses to be outputted during said sampling period in accordance with a level of said sampled input signal; means for producing a second signal for controlling the width of pulses to be outputted during said sampling period according to said level of said sampled input signal; means for combining said first and second signals to produce a

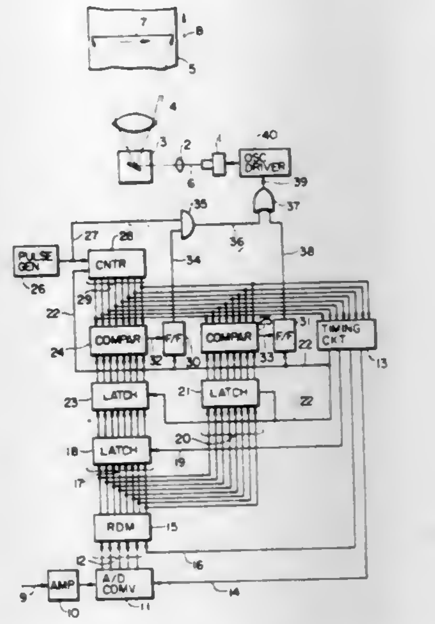

third signal; and means for modulating a light beam source in accordance with said third signal.

4,375,066
IJP DROP MODULATOR
Richard D. Herd, Duncanville, Tex., assignor to Recognition Equipment Incorporated, Dallas, Tex.
Filed Mar. 10, 1981, Ser. No. 242,213
Int. Cl.³ G01D *15/18*
U.S. Cl. 346—140 R **6 Claims**

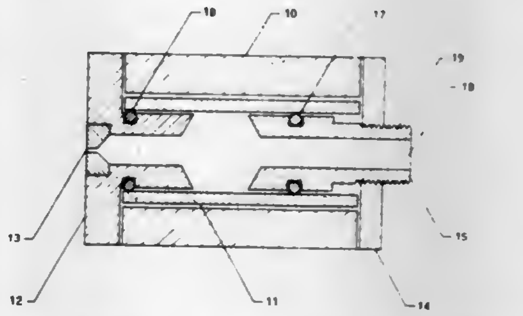

1. An adjustable frequency ink jet printer modulator comprising; a piezoelectric crystal, a front plate and a rear plate, said crystal, front plate and rear plate forming an ink cavity, and an adjustable plunger extending through said rear plate for varying the size of said ink cavity.

4,375,067
SEMICONDUCTOR LASER DEVICE HAVING A STABILIZED OUTPUT BEAM
Takashi Kitamura, Yokohama, Japan, assignor to Canon Kabushiki Kaisha, Tokyo, Japan
Filed May 6, 1980, Ser. No. 147,174
Claims priority, application Japan, May 8, 1979, 54-56794; Jan. 23, 1980, 55-6685; Jan. 23, 1980, 55-6686
Int. Cl.³ G01D *15/14;* **H01S** *3/10*
U.S. Cl. 346—160 **32 Claims**
28. An image recording apparatus comprising:
a semiconductor laser element;
a photosensitive medium receiving the output light of said laser element;
means for forming an electrostatic latent image on said photosensitive medium in response to said output light;
detector means for detecting the intensity of said output light;
an optical filter for compensating for a variation in sensitivity of said photosensitive medium caused by an output

wavelength shift based on a temperature variation of said laser element, said optical filter having a transmission factor distribution corresponding to the spectrum sensitivity distribution of said photosensitive medium; and

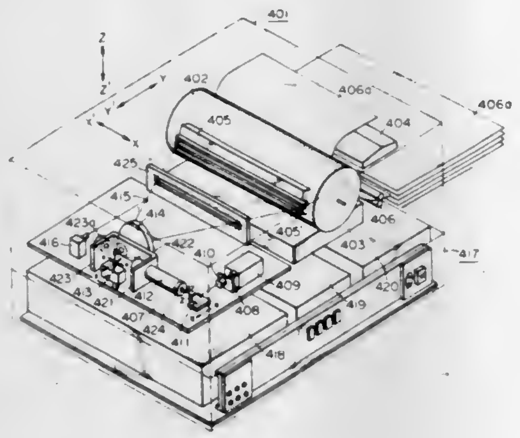

an adjusting mechanism capable of arbitrarily adjusting an angle of said optical filter with respect to the direction of emergence of said output light from said laser element.

4,375,068
RADIOGRAPHIC APPARATUS AND METHOD WITH LOGARITHMIC VIDEO COMPRESSION
Thomas R. McBride, Newbury, Ohio, assignor to Technicare Corporation, Solon, Ohio
Filed Apr. 21, 1980, Ser. No. 142,499
Int. Cl.³ H04N *7/18*
U.S. Cl. 358—111 **13 Claims**

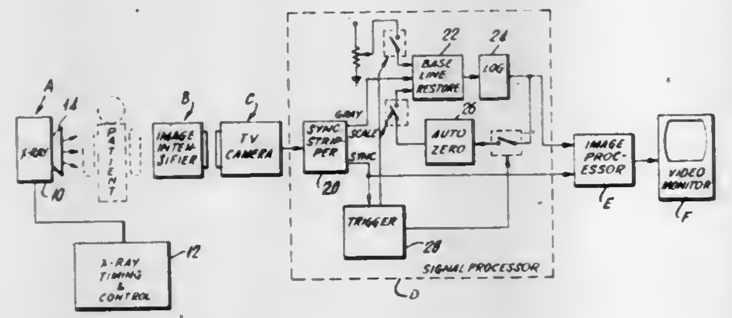

1. A radiographic apparatus comprising:
(a) a radiation source for irradiating an examined object with penetrating radiation, such as x-radiation;
(b) means for converting penetrating radiation into a video signal, said penetrating radiation to video signal converting means being disposed to receive from said radiation source penetrating radiation which has traversed the examined object, said video signal having a gray scale portion and a synchronization portion;
(c) logarithmic transfer means for logarithmically compressing the gray scale portion of the video signal, said logarithmic transfer means being operatively connected to said radiation to video signal converting means, the logarithmic transfer means producing an output signal that includes a logarithmically compressed video signal;
(d) base line restoring means for combining an offset signal with the gray scale portion of the video signal, said base line restoring means being operatively connected with said radiation to video signal converting means; and
(e) an automatic zero circuit supplied with the output signal of the logarithmic transfer means and coupled to the base line restoring means, said automatic zero circuit generating the offset signal combined with the gray scale portion of the video signal.

4,375,069
PROGRAMMABLE FORMAT SEQUENCER FOR DISK DRIVE
Eric J. Halvorsen, East Layton, and David T. Cornaby, Roy, both of Utah, assignors to Iomega Corporation, Ogden, Utah
Filed Apr. 24, 1981, Ser. No. 257,469
Int. Cl.³ G11B *5/09, 15/18*
U.S. Cl. 360—49 **6 Claims**

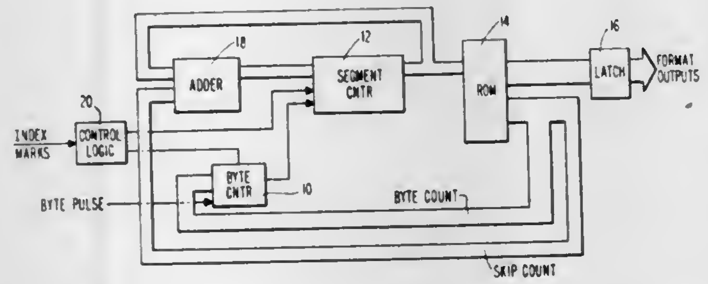

1. A programmable format sequencer for providing control signals to disk drive apparatus, said signals being output in response to a determination that particular portions of a disk are juxtaposed to a read/write head at a given time, said format sequencer comprising:
means for counting bytes of data recorded on said disk;
means for comparing said count with predetermined numbers of bytes defined to be within a given track segment on said disk;
means for outputting appropriate control signals for each said segment; and
means for sequentially supplying byte counts corresponding to each said segment to said comparator for use in each said comparison step.

4,375,070
MAGNETIC HEAD SOFT LOADING AND UNLOADING DEVICE
Shin Isozaki; Masaru Sasaki, and Kanji Sakurai, all of Kamakura, Japan, assignors to Mitsubishi Denki Kabushiki Kaisha, Tokyo, Japan
Filed Sep. 30, 1980, Ser. No. 192,596
Claims priority, application Japan, Oct. 1, 1979, 54/126621
Int. Cl.³ G11B *21/12, 5/54*
U.S. Cl. 360—75 **11 Claims**

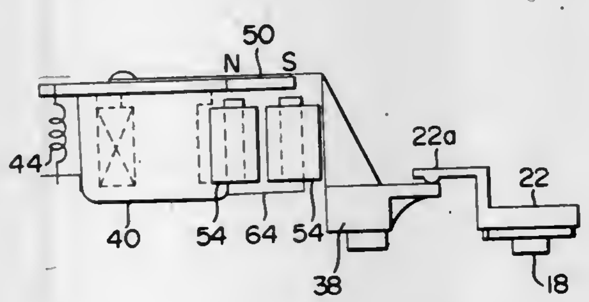

1. A magnetic head soft loading and unloading device for use with an interchangeable two-sided magnetic recording medium comprising: a carriage movable along both sides of said magnetic recording medium; a pair of magnetic heads disposed on said carriage; a turnable first arm, at least one of said pair of magnetic heads being disposed on said first arm; said first arm being turnable to move said at least one of said pair of heads toward said magnetic recording medium to load said magnetic recording medium with said at least one of said pair of magnetic heads and moving said at least one of said pair of magnetic heads away from said magnetic recording medium to unload said at least one of said pair of magnetic heads from said magnetic recording medium; driving means, including an electromagnetic device for turning said first arm when said magnetic recording medium is loaded with said at least one of said pair of magnetic heads and when said at least one of said pair of magnetic heads is unloaded from said magnetic recording medium, said electromagnet device including an armature, a return spring operatively coupled to said armature for biasing said at least one of said pair of magnetic heads away from said magnetic recording medium, and an exciting winding disposed around said electromagnet device; a speed sensor for sensing a speed of movement of said first arm and producing a first signal indicative of said speed of movement; and a driving circuit means, responsive to said first signal, for controlling current flow through said exciting winding so as to control a speed at which said electromagnet device as energized by said current turns said first arm and thereby controls a speed at which said at least one of said pair of magnetic heads is moved toward or away from said magnetic recording medium.

4,375,071
MOUNTING MEANS FOR MAGNETIC READ HEAD
Crowley Daniel J., Harrisburg, and Jon D. Stine, Elizabethtown, both of Pa., assignors to AMP Incorporated, Harrisburg, Pa.
Filed Oct. 20, 1980, Ser. No. 198,750
Int. Cl.³ G11B *5/48, 21/16*
U.S. Cl. 360—104 **4 Claims**

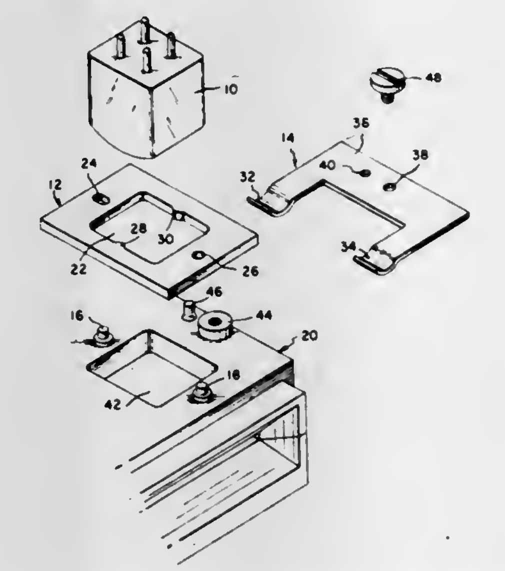

1. A means for mounting a magnetic read head in a card reader or the like comprising:
an annular plate secured to and extending peripherally from said magnetic read head, said plate having at least two bores in opposed spaced relationship on opposite sides of said plate;
a pair of mounting studs integral with a housing of said card reader, said studs being aligned to be received in the respective bores of said plate and having a length greater than the thickness of said plate; and
a spring member having a pair of parallel spaced arms engaging said plate on opposite sides of said magnetic read head overlying said studs whereby said magnetic read head is mounted on said studs for relative movement therealong allowing limited float.

4,375,072
SELF-CALIBRATING OVERCURRENT DETECTOR
Anthony J. Rice, La Gaude, France, assignor to International Business Machines Corporation, Armonk, N.Y.
Filed Mar. 30, 1981, Ser. No. 248,742
Claims priority, application France, Apr. 10, 1980, 80 08341
Int. Cl.³ H02H *3/08*
U.S. Cl. 361—87 **10 Claims**

1. Self-calibrating overcurrent detector characterized in that it includes:
means for generating a first voltage (VS) which is proportional to the current whose fault value is to be detected,
means which are active during an initialization cycle for generating a second increasing voltage (VC) which, at the end of the initialization cycle, is equal to the first voltage and for deriving from said second voltage a threshold voltage (VD) such that VS=kVC, k being a numerical factor higher than 1, and

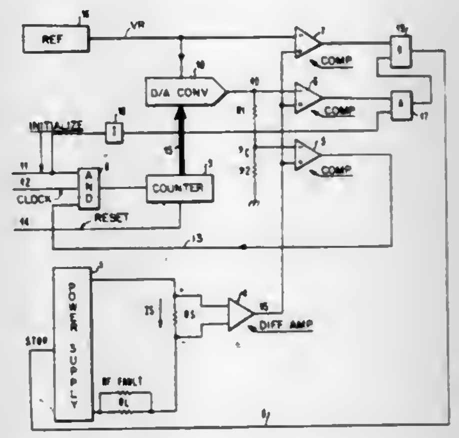

first means for comparing the threshold voltage with the first voltage in order to provide a fault detection indication after the initialization cycle.

4,375,073
DUAL-MONITORING PROTECTION CIRCUIT FOR SWITCHING TRANSISTOR
Miroslav Glogolja, Somerville, and Arthur A. Baumgarten, Morris Plains, both of N.J., assignors to Reliance Electric Company, Cleveland, Ohio
Filed Jun. 16, 1980, Ser. No. 159,835
Int. Cl.³ H02H *3/38*
U.S. Cl. 361—91 **17 Claims**

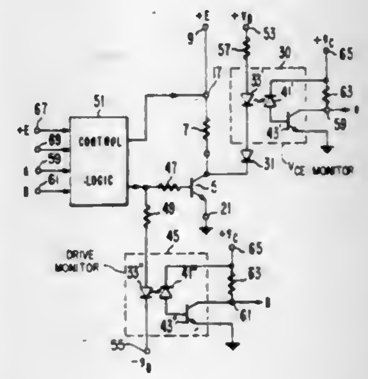

1. Apparatus for monitoring a fault in a main current conducting path of a transistor activated into saturation between first and second opposite electrodes of the path in response to a drive current applied to a control electrode of the transistor, the fault occurring with the drive current being applied to the control electrode while the transistor is not in saturation, comprising first sensing means for detecting that the transistor is and is not activated to saturation, second sensing means for detecting the presence of drive current to the control electrode, and means responsive to the first and second sensing means for indicating a fault in response to the first sensing means detecting that the transistor is not activated to saturation while the second sensing means detects the presence of the drive current.

4,375,074
DUAL-MODE TRANSISTOR TURN-OFF
Miroslav Glogolja, Somerville, N.J., assignor to Reliance Electric Company, Cleveland, Ohio
Filed Aug. 8, 1980, Ser. No. 176,358
Int. Cl.³ H02H *9/04*
U.S. Cl. 361—91 **19 Claims**

1. In a protection circuit for a switching transistor having collector, emitter and base electrodes, said base electrode

being responsive to a drive current signal for selectively turning on said transistor, a method for turning off said transistor from conduction of a fault current of substantially higher magnitude than that of the maximum current magnitude determined by the reverse bias safe operating area specification for said transistor, the method comprising the steps of:

(a) sensing the voltage between the collector and emitter electrodes of said transistor when turned on;

(b) initiating turn-off of said transistor by removing the drive current to said base electrode while substantially concurrently connecting a relatively low impedance current conduction path between said base and emitter electrodes whenever the level of said sensed voltage equals or exceeds a predetermined level indicative of a fault condition; and

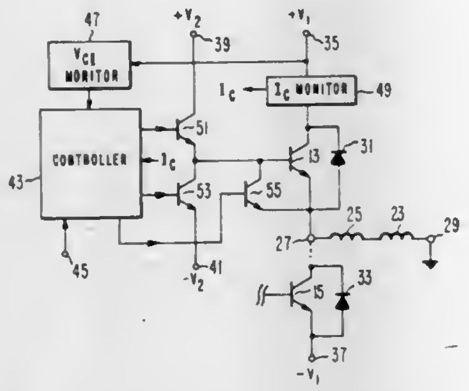

(c) removing the drive current to said base electrode while substantially concurrently connecting a predetermined level of reverse bias voltage to said base electrode, for selectively turning off said transistor from a normal conducting state, as indicated by said sensed voltage being below said predetermined level.

4,375,075
TANTALUM CAPACITORS WITH INTERNAL CURRENT-LIMITING MEANS

Balint Escher; Dominique Prince, and Rene Romanet, all of Conflans Sainte Honorine, France, assignors to Lignes Telegraphiques et Telephoniques, Paris, France
Filed Mar. 27, 1980, Ser. No. 134,679
Claims priority, application France, Apr. 2, 1979, 79 08275
Int. Cl.³ H01G *9/18*
U.S. Cl. 361—433 **5 Claims**

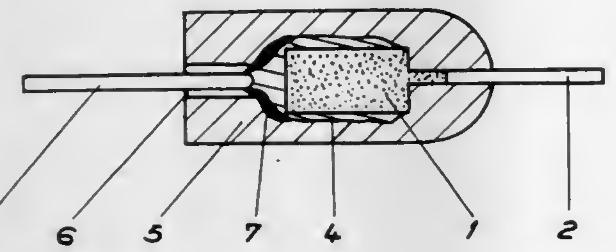

1. A solid-electrolyte tantalum capacitor comprising a frittered tantalum powder anode oxidized on the surface and impregnated and coated with manganese dioxide, conducting layers deposited on said dioxide, an anode lead in contact with said frittered tantalum, a soldered cathode lead soldered to said conducting layers and a protection provided by a casing or moulded coating, said protection being provided with an opening communicating to the outside of said casing close to the soldered cathode lead, for evacuating molten solder.

4,375,076
CYCLICALLY CONTROLLED ELECTRICAL EQUIPMENT HAVING A CONTROL ANGLE WHICH IS VARIABLE OVER A PORTION OF THE OPERATING CYCLE

Harry Magnusson, Vasteras; Göte Tallbäck, Helsingborg, and Ake Wennberg, Vasteras, all of Sweden, assignors to ASEA Aktiebolag, Vasteras, Sweden
Filed Apr. 9, 1980, Ser. No. 138,802
Claims priority, application Sweden, Apr. 9, 1979, 7903123
Int. Cl.³ H02M *7/155*
U.S. Cl. 363—68 **6 Claims**

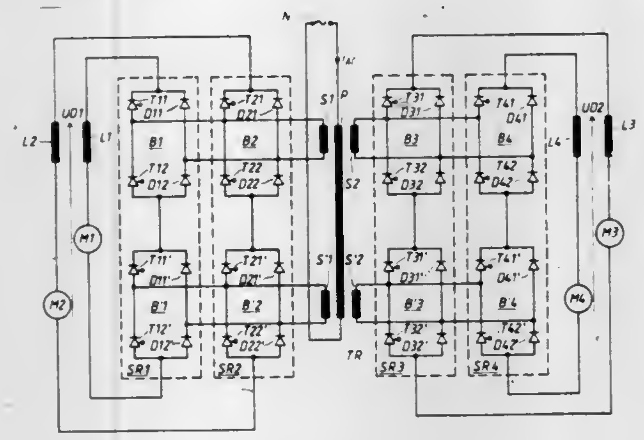

1. Electrical converter equipment for the supply of electrical current to at least one d.c. load comprising: a controllable converter connected to an alternating voltage source, said converter having a by-pass path for the direct current, control means for controlling the direct voltage of the converter by influencing the control angle of the converter, the control means operating cyclically such that each operating cycle comprises a plurality of half-periods of the alternating voltage of the alternating voltage source and that the converter within at least part of the control range operates with different control angles during the different half-periods of a cycle, wherein each of said cycles comprises n periods of the alternating voltage of the source, n being an odd number not less than three, said control means, during two of the half-periods of the cycle controlling the converter with a control angle which is variable for influencing the direct voltage of the converter and, during each of the other half periods of the cycle, controlling the converter with a fixed control angle, and the half-periods during which the converter is controlled with said variable control angle being time equidistant.

4,375,077
POWER SUPPLY REGULATOR CIRCUIT EMPLOYING A TRANSFORMER HAVING A CONTROL WINDING

James B. Williams, Framingham, Mass., assignor to Data General Corporation, Westboro, Mass.
Filed Feb. 26, 1981, Ser. No. 238,530
Int. Cl.³ H02P *13/12*
U.S. Cl. 363—91 **3 Claims**

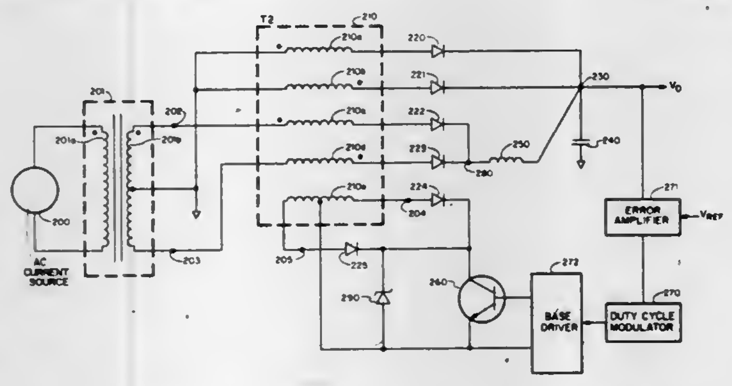

1. Electrical apparatus for voltage regulation, said apparatus comprising:

a transformer, said transformer having at least one primary winding conductively connected between a voltage source and the output of said apparatus, at least one secondary winding conductively connected between ground and the output of said apparatus, and at least one control winding magnetically coupled to said at least one primary winding and said at least one secondary winding;

means for rectifying the outputs of at least said at least one primary winding and said at least one secondary winding; and

control means connected to said at least one control winding whereby the output of said apparatus can be modified.

4,375,078
DATA TRANSFER CONTROL CIRCUIT

Donald E. Thoma, Mt. Prospect, Ill., assignor to GTE Automatic Electric Labs Inc., Northlake, Ill.
Filed Mar. 26, 1981, Ser. No. 247,962
Int. Cl.³ G06F *3/00*
U.S. Cl. 364—200 **7 Claims**

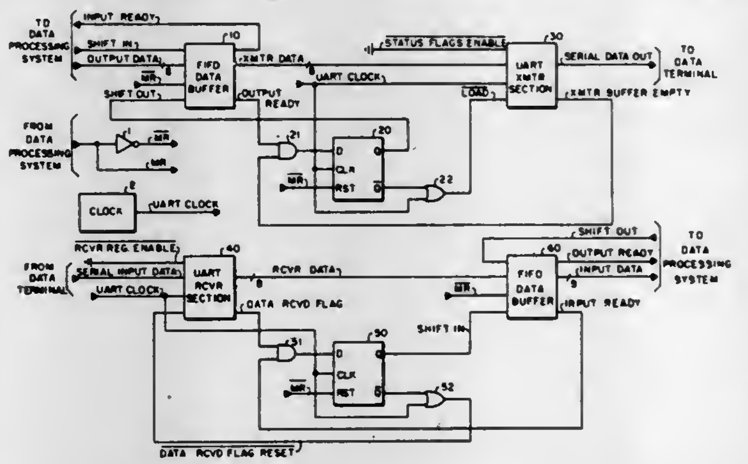

1. A data transfer control circuit, including a transmitting and a receiving section, for transmitting data words from a data processing system to a data terminal and for receiving data words from said data terminal for transmission to said data processing system, said data transfer control circuit connected between said data processing system and said data terminal, said data transfer control circuit comprising:

a clock for providing periodic pulses of a predetermined frequency;

said transmitting section comprising:

a first buffer connected to said data processing system and operated to store said data words transmitted from said data processing system;

converter means for converting parallel data to serial data, said converter means connected to said data terminal and to said first buffer;

first gating means connected to said first buffer and to said converter means, and operated in response to said first buffer to produce a first signal;

latching means connected to said clock, to said first gating means and to said first buffer, operated in response to said first signal to produce a second signal and a third signal;

said first buffer operated in response to said second signal to transfer a data word to said converter means;

second gating means connected between said latching means and said converter means and connected to said clock, and operated in response to said third signal to produce a fourth signal; and

said converter means operated in response to said fourth signal to store said transferred data word from said first buffer temporarily, to convert said data word to serial data and to transmit said data word to said data terminal;

said receiving section comprising:

second buffer for storing data, connected to said data processing system;

said converter means for converting serial data to parallel data and temporarily storing a data word for transmission, and said converter means further connected to said data terminal and to said second buffer;

third gating means connected to said second buffer and to said converter means and operated in response to said converter means to produce a fifth signal;

flip-flop means connected to said clock, to said third gating means and to said second buffer, and operated in response to said fifth signal to produce a sixth signal and a seventh signal;

fourth gating means connected between said flip-flop means and said converter means and connected to said clock, and operated in response to said seventh signal and said clock to produce an eight signal;

said converter means operated in response to said eight signal to transfer said data word to said second buffer for storage; and

said second buffer operated in response to said sixth signal to receive said data word transferred from said converter means and to store said data word for subsequent transmission to said data processing system via said second buffer.

4,375,079
DIGITAL DATA DISPLAY SYSTEM

Martin W. Ricketts, and Neil A. Stubbens, both of Eastleigh, England, assignors to International Business Machines Corp., Armonk, N.Y.
Filed Sep. 8, 1980, Ser. No. 185,104
Claims priority, application United Kingdom, Sep. 27, 1979, 7933534
Int. Cl.³ B41B *15/40*; G08B *5/22*
U.S. Cl. 364—518 **6 Claims**

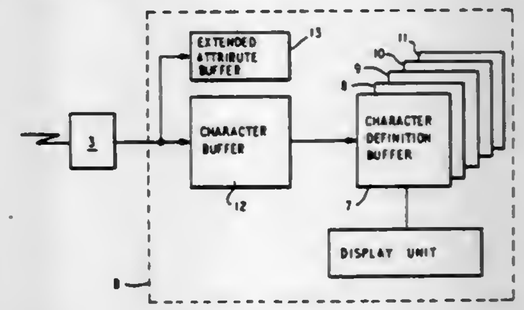

1. A digital data display system in which a raster scanned display device includes a character definition buffer store and a screen buffer for storing screen definition data relating display screen areas with character definitions stored in the character definition buffer store, means for operating the display device, the character definition buffer store and the screen buffer for displaying a picture and/or text in a row and column array of cell positions on the display device, a processing unit connected to the display device through a communications link and having means responsive to a command to send character definition data and screen buffer data to the display device to present a new picture on the screen, the character definition data and the screen buffer data for a new picture being an amount of data that is ordinarily sent to the display device in a series of transmissions, wherein the improvement comprises,

means in the processing unit responsive to a command to present a new picture on the screen of the display device to send screen buffer data and character definition data to the display device interleaved in a series of transmissions with each transmission including character definition data for any new character required by the screen definition data of the same transmission whereby the new picture is built and displayed on the screen from the transmissions of data as they are received at the display device and stored in the buffer and screen stores.

4,375,080
RECORDING AND EVALUATING INSTRUMENT AND METHOD FOR TEACHER EVALUATION
Patrick D. Barry, 2403 Gunwale Pl., Woodbridge, Va. 22192; Robert E. Lowrey, 143 Oliver St., Conway, Ark. 72032, and Kenneth Dobbs, Canton, Okla. 73724
Filed Jun. 4, 1980, Ser. No. 156,503
Int. Cl.³ G06F *3/06, 15/20*
U.S. Cl. 364—551 **20 Claims**

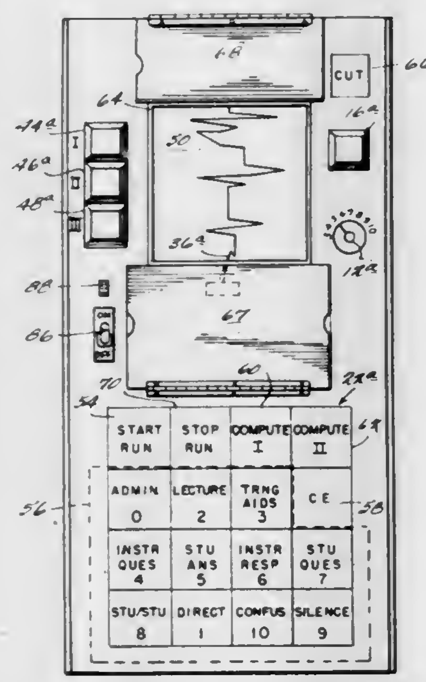

1. A method of collecting and displaying classroom teacher evaluation data comprising the steps of:
generating discrete information signals at consecutive predetermined time intervals successively indicative of respective consecutive predetermined classroom activities observed by an observer in the teacher's classroom; and
recording said discrete information signals in real time, as they are generated, in graphic form providing a permanent record of consecutive transitional events representing transitions in the observed predetermined classroom activities, each of said transitional events being represented by a line on a graph extending from a point of said graph having an ordinate corresponding to just previously received said information to a point of said graph having an ordinate corresponding to presently received said information, the abscissa of each successive such point being incremented by one predetermined interval representing one of said predetermined time intervals.

4,375,081
MULTISTAGE DIGITAL FILTERING UTILIZING SEVERAL CRITERIA
Barry Blesser, Raymond, N.H., assignor to Pencept, Inc., Waltham, Mass.
Filed Dec. 5, 1980, Ser. No. 213,583
Int. Cl.³ G06F *15/31*
U.S. Cl. 364—724 **12 Claims**

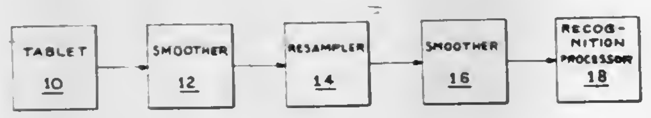

1. The method of filtering a signal represented by a first series of indicia wherein each indicium of the series represents the amplitude comprising the steps of serially averaging the amplitudes of the indicia of sets of indicia of the first series wherein each set includes a given number n of indicia, n being a positive integer less than the number of indicia in the first series of indicia, to form a second series of indicia and serially amplitude comparing each subsequently occurring indicium of the second series with a previously occurring indicium thereof to form a third series of indicia comprising those indicia which result in comparisons having an amplitude difference greater than a predetermined amount.

4,375,082
HIGH SPEED RECTANGLE FUNCTION GENERATOR
Dieter R. Lohrmann, Lanham, Md., assignor to The United States of America as represented by the Secretary of the Army, Washington, D.C.
Filed Dec. 15, 1980, Ser. No. 216,232
Int. Cl.³ G06G *7/26*
U.S. Cl. 364—851 **12 Claims**

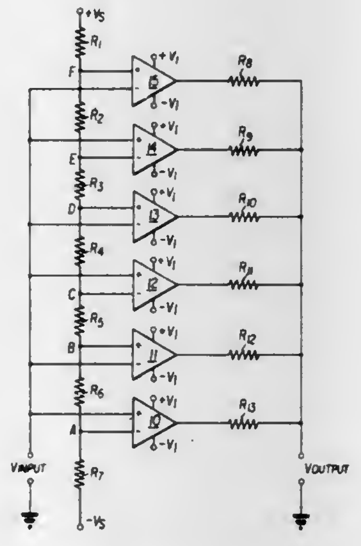

1. A high speed rectangle function generator for generating an output voltage which is a rectangle function of a varying input voltage, comprising:
a plurality of amplifiers for generating amplifier output voltages which are switched between two voltage levels in accordance with the varying input voltage and respective fixed voltages, each amplifier output voltage being switched at high speed to one voltage level whenever the input voltage rises above the fixed voltage and being switched at high speed to the other voltage level whenever the input voltage falls below the fixed voltage;
fixed voltage generating means for generating said fixed voltages which are supplied respectively to said amplifiers; and
summing means for summing the amplifier output voltages to generate the output voltage of the rectangle function generator;
wherein the amplifiers are connected to receive the input voltage and the respective fixed voltages and to supply the amplifier output voltages to the summing means as alternately arranged inversion and non-inversion amplifiers so that, in each pair of amplifiers receiving adjacent fixed voltages, one amplifier is connected as an inversion amplifier and the other amplifier is connected as a non-inversion amplifier.

4,375,083
SIGNAL SEQUENCE EDITING METHOD AND APPARATUS WITH AUTOMATIC TIME FITTING OF EDITED SEGMENTS
Nicholas F. Maxemchuk, Mountainside, N.J., assignor to Bell Telephone Laboratories, Incorporated, Murray Hill, N.J.
Filed Jan. 31, 1980, Ser. No. 117,104
Int. Cl.³ G11B *27/02*
U.S. Cl. 364—900 **36 Claims**

1. A method for recording and editing digitally coded signal sample amplitude information, said method comprising the steps of
defining in a train of coded samples successive discrete blocks of samples,
computing for each of a plurality of said blocks a signal parameter that is a function of said information for such a block of samples,

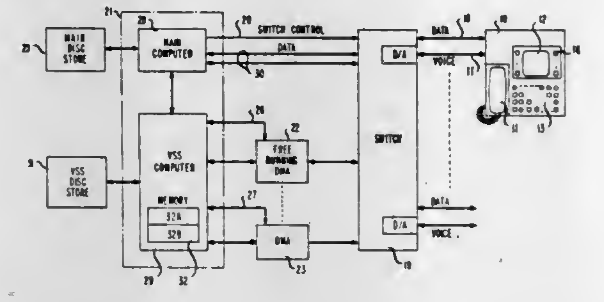

storing in retrievable association sample amplitude information and said parameter for such information, and
processing said sample amplitude information for editing in accordance with the respective associated parameters.

4,375,084
DIGITAL INPUT APPARATUS
Yukio Urushibata, Hino, Japan, assignor to Tokyo Shibaura Denki Kabushiki Kaisha, Kawasaki, Japan
PCT No. PCT/JP79/00169, § 371 Date Apr. 28, 1980, § 102(e) Date Apr. 21, 1980
PCT Filed Jun. 29, 1979, Ser. No. 196,049
Claims priority, application Japan, Aug. 28, 1978, 53-103806; Aug. 28, 1978, 53-103807; Aug. 28, 1978, 53-103808
Int. Cl.³ G06F *11/00;* **G06M** *3/02*
U.S. Cl. 364—900 **11 Claims**

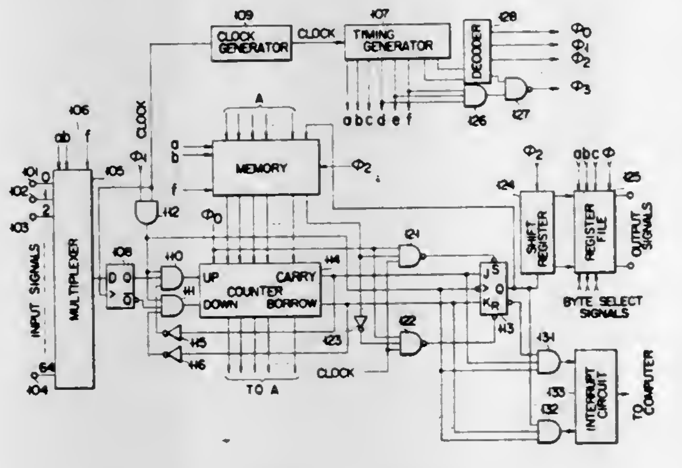

1. A digital input apparatus comprising
multiplexer means adapted to receive a plurality of input signals and select a desired input signal for outputting;
first latch means connected to said multiplexer means to latch the output signal selected by said multiplexer means;
counter means for effecting a count operation from an output signal from said first latch means;
second latch means connected to said counter means to latch an output signal from said counter means;
gate means connected between the first latch means and said counter means to control a signal inputted to said counter means by the output of said counter means;
memory means connected to said counter means and to an output signal from said second latch means for storing a count of said counter means and the output signal from said second latch means; and
timing signal generating means for supplying timing signals to the multiplexer means, said counter means and said memory means and for supplying an address control signal to said multiplexer means and said memory means.

4,375,085
DENSE ELECTRICALLY ALTERABLE READ ONLY MEMORY
Gary D. Grise, Milton, Vt.; Ning Hsieh, San Jose, Calif.; Howard L. Kalter, Colchester, and Chung H. Lam, Williston, both of Vt., assignors to International Business Machines Corporation, Armonk, N.Y.
Filed Jan. 2, 1981, Ser. No. 221,958
Int. Cl.³ G11C *11/40*
U.S. Cl. 365—104 **14 Claims**

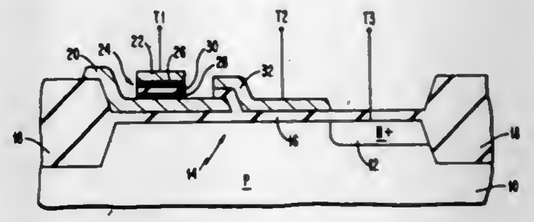

1. A memory comprising:
a semiconductor substrate of a first conductivity type having a region of a second conductivity type defining one end of a channel region,
a control plate,
a floating plate disposed between said control plate and said channel region,
a control gate disposed between said floating plate and said second conductivity type region and coupled to said channel region,
means for selectively charging said floating plate to form an inversion capacitor in said channel region,
means for supplying charge to said inversion capacitor, and means for detecting the charge in said inversion capacitor.

4,375,086
VOLATILE/NON-VOLATILE DYNAMIC RAM SYSTEM
Armand J. van Velthoven, Manitou Springs, Colo., assignor to NCR Corporation, Dayton, Ohio
Filed May 15, 1980, Ser. No. 150,275
Int. Cl.³ G11C *11/24*
U.S. Cl. 365—149 **10 Claims**

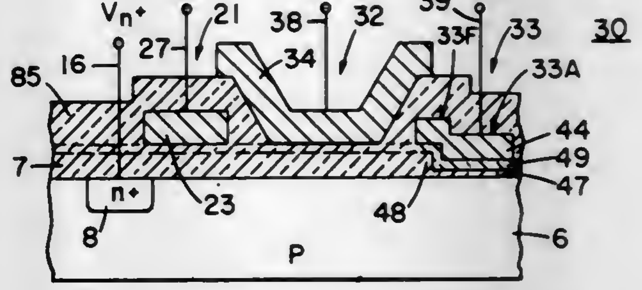

1. A volatile/non-volatile RAM cell having volatile data store, volatile-to-nonvolatile store, and nonvolatile-to-volatile restore capabilities, comprising:
volatile storage means, including a capacitor, for storing binary charge data;
non-volatile storage means for selectively storing the charge data in the volatile storage means;
means for providing a preselected energy barrier which must be overcome for charge transfer between the volatile storage means and the non-volatile storage means; and
a charge transfer device for effecting the charge storage state of the volatile storage means during volatile operation and in cooperation with the nonvolatile storage means effecting the nonvolatile-to-volatile restore operation.

4,375,087

ELECTRICALLY ERASABLE PROGRAMMABLE READ ONLY MEMORY

Frank M. Wanlass, Cupertino, Calif., assignor to Hughes Aircraft Company, Culver City, Calif.

Filed Apr. 9, 1980, Ser. No. 138,806

Int. Cl.³ G11C *13/00, 11/44*

U.S. Cl. 365—218 **20 Claims**

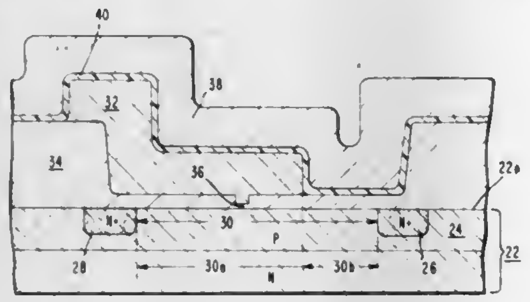

1. An electrically erasable and programmable transistor, comprising:

a semiconductor substrate;

a source and a drain defining a channel region therebetween in said substrate;

an insulated floating gate at least partially overlying said channel region;

a dielectric film between said floating gate and said substrate, said film having a thin tunneling region overlying said channel region;

a control gate overlying said floating gate and spanning said channel region, said control gate insulated from said floating gate and from said substrate; and

means for setting the potential of said channel region to be sufficiently more attractive to electrons than the potential of said overlying control gate so as to cause electrons to tunnel from said floating gate to said channel region, and for setting said channel region potential to be sufficiently less attractive so as to prevent electrons from tunneling from said floating gate to said channel region and allow electrons to tunnel from said channel region to said floating gate.

4,375,088

OPTICALLY READABLE RECORD CARRIER WITH TRACK VARIATIONS WHICH PROVIDE CLOCK AND TRACKING SIGNALS AND APPARATUS FOR RECORDING AND/OR REPRODUCING DATA FROM SUCH A RECORD CARRIER

Maarten R. de Haan; Klaas Compaan, and Leopold H. Hissel, all of Eindhaven, Netherlands, assignors to U.S. Philips Corporation, New York, N.Y.

Filed Apr. 14, 1980, Ser. No. 139,924

Claims priority, application Netherlands, Jan. 9, 1980, 8000122

Int. Cl.³ G11B *7/00*

U.S. Cl. 365—234 **38 Claims**

1. A record carrier for storing a digitally coded signal having a fixed bit frequency and a power spectrum with a substantially zero level at a predetermined frequency, said record carrier comprising a substrate provided with at least one information section for storing the digitally coded signal in a form detectable by a beam of radiation and at least one elongated servo track having a first periodic variation of a first period corresponding to said predetermined frequency and a configuration such that when scanned by a beam of radiation, the radiation is modulated by said first periodic variation to produce a first modulation component of a frequency corresponding to said first period for generating a clock signal for synchronizing read out or recording of the digitally coded signal, said servo track further having a second periodic variation in a direction transverse to the longitudinal direction of said servo track of a second period which is at least of the same order of magnitude as said first period, said second variation being configured to produce a second modulation component in the radiation of a frequency corresponding to said second period

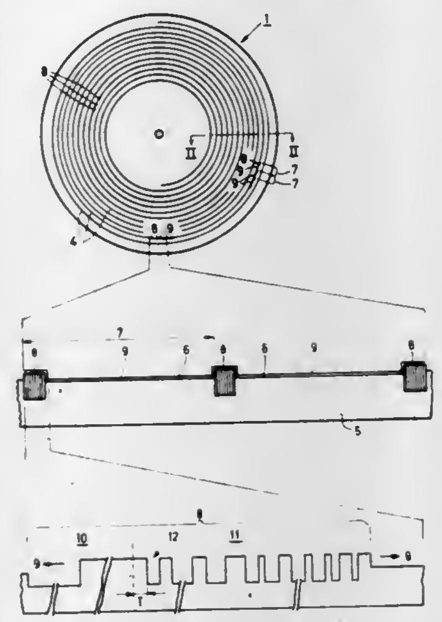

for generating a tracking signal for guiding a radiation beam used for readout or recording of the digitally coded signal.

4,375,089

DEPTH TRANSDUCER SYSTEM FOR A SEISMIC STREAMER CABLE

Ben B. Thigpen; Eldon E. Crump, and David G. Shave, all of Houston, Tex., assignors to Western Geophysical Company of America, Houston, Tex.

Filed Oct. 27, 1980, Ser. No. 200,852

Int. Cl.³ G01V *1/38*

U.S. Cl. 367—20 **11 Claims**

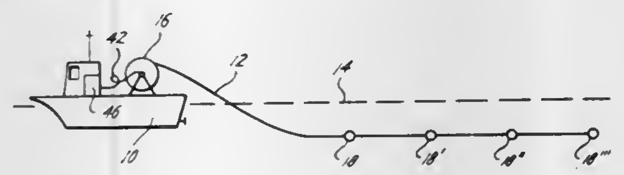

1. A depth transducer system for a ship-towed seismic marine streamer cable comprising:

a plurality of depth transducers externally secured to a seismic streamer cable at successively greater distances from a towing ship;

means for periodically transmitting an electrical control signal through a common transmission line mounted internally of said streamer cable;

external sensing means associated with said depth transducers, for sensing the presence of a control signal in said common transmission line;

means in said depth transducers responsive to a sensed control signal for launching a depth-proportional signal in the form of a damped transient wave train into said common transmission line;

means for delaying the transmission of the response of said transducers in a predetermined relationship to the distances of the respective depth transducers from the towing ship;

an electrical power source associated with each said depth transducer; and

a switch in each said depth transducer having a first contact position for charging a capacitor from said power source and a second contact position for discharging said capacitor into an LC circuit in said depth transducer to generate said depth-proportional signal and means for actuating said switch in response to a sensed, delayed control signal.

4,375,090

METHOD FOR INTERPRETING SEISMIC RECORDS TO YIELD INDICATIONS OF GAS/OIL IN AN EARTH FORMATION SUCH AS A SANDSTONE, LIMESTONE, OR DOLOSTONE

Don D. Thompson, Corona Del Mar; Robert J. S. Brown, Fullerton, and Richard J. Runge, Anaheim, all of Calif., assignors to Chevron Research Company, San Francisco, Calif.

Continuation of Ser. No. 863,828, Dec. 23, 1977, abandoned. This application Oct. 9, 1979, Ser. No. 83,189

Int. Cl.³ G01V *1/30*

U.S. Cl. 367—73 **10 Claims**

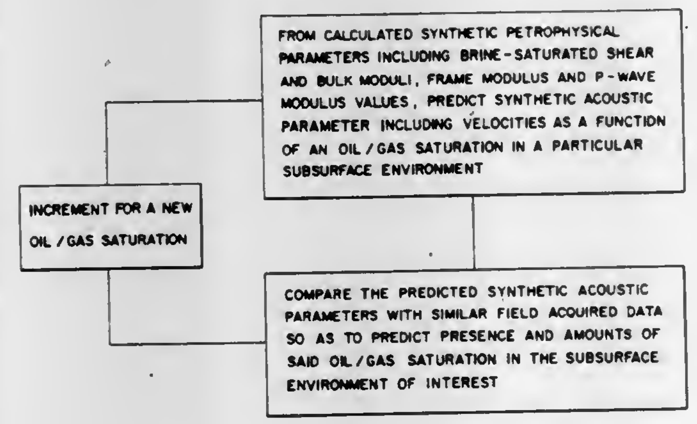

1. System for resolving event characteristics of a seismic record so as to determine gas/oil fractions in a selected zone of an earth formation by creating synthetic gas/oil-indicating characteristics from brine-saturated petrophysical parameters corresponding to each selected zone of interest, and comparing such characteristics with said record comprising:

(A) Means for obtaining said seismic record for at least said selected zone;

(B) Means for determining actual compressional velocity and density values of said zone of interest based on field information associated with a known zonal lithology selected from a group comprising sandstone, limestone and dolostone;

(C) A programmable digital computer for:

(i) from the parameters of (B), generating a brine-saturated P-wave modulus value corresponding to said zone of interest;

(ii) from said generated brine-saturated P-wave modulus value of (i), predicting compressional velocities of said zone with gas/oil in differing amounts present in said zone, in accordance with the relationship

$$V_p = 1/\rho_b K_a + \frac{(1 - K_a/K_m)^2}{\phi K_f + (1 - \phi)/K_m - K_a/K_m^2} + (4/3)G^{*\,\frac{1}{2}}$$

where rho-b is the bulk density, ϕ is the porosity, G^* is the shear modulus at the saturations of interest, Kf equals the bulk modulus for the liquid-gas mixture, Ka is the frame modulus, Km is the bulk modulus of a hypothetical rock, i.e., same composition but perfectly cemented with zero porosity;

(iii) from seismic velocities of (B), predicting synthetic seismic amplitude information with gas/oil present in said zone in differing amounts; and

(iv) comparing said predicted amplitude information with actual field-acquired amplitude data associated with said seismic record of (A) so as to determine both presence and amounts of gas/oil within said zone of interest.

4,375,091

METHOD AND APPARATUS FOR INFORMATION RETRIEVAL FROM AN OPTICALLY READABLE STORAGE MEDIUM

Wayne R. Dakin, Redondo Beach, and Ludwig Ceshkovsky, Fountain Valley, both of Calif., assignors to Discovision Associates, Costa Mesa, Calif.

Continuation of Ser. No. 920,777, Jun. 30, 1978, abandoned. This application Aug. 24, 1981, Ser. No. 295,629

Int. Cl.³ G11B *7/00, 17/00*

U.S. Cl. 369—32 **12 Claims**

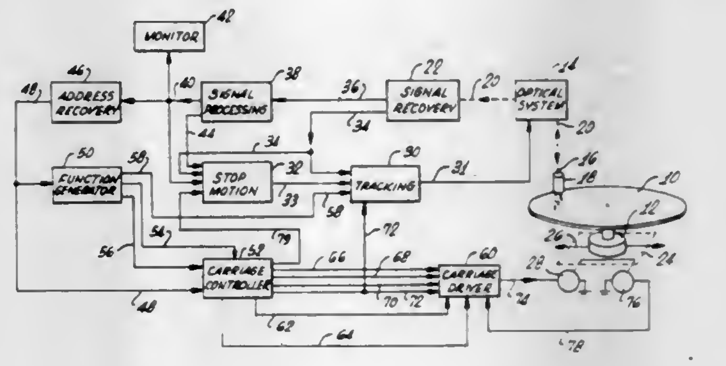

1. In an apparatus for selectively retrieving information from a plurality of optically readable information tracks formed in an information storage medium, wherein the information includes addresses uniquely identifying each information track, and the apparatus includes means for impinging an incident beam of radiation upon the storage medium and means for recovering information from a modulated beam of radiation produced thereby, the combination comprising:

first means for selecting a target address corresponding to a target track from which information is to be retrieved in a retrieval mode of operation;

carriage means for moving the storage medium and the incident beam of radiation relative to one another to cause the incident beam to move across said tracks in a search mode of operation;

second means for monitoring the modulated beam to detect addresses from information recovered as the incident beam impinges upon the storage medium while said carriage means is in said search mode of operation;

third means, responsive to both said first means and said second means, for comparing the target address with addresses detected during relative movement between the storage medium and the incident beam in said search mode of operation to produce an indication of the separation between the target and the impingement point of the incident beam; and

control means for conditioning said carriage means to decrease the separation between the impingement point of the incident beam and the target track, said control means being responsive to said third means to vary the rate of relative movement in a prescribed manner as the separation decreases, said control means causing said carriage means to cease crossing tracks when said target address is detected.

4,375,092

AUTOMATIC MUSIC SELECTING DEVICE

Junichi Yoshio, Tokorozawa, Japan, assignor to Pioneer Electronic Corporation, Tokyo, Japan

Filed Jul. 16, 1981, Ser. No. 283,855

Claims priority, application Japan, Jul. 17, 1980, 55-96870; Sep. 24, 1980, 55-131499

Int. Cl.³ G11B *3/38, 17/06*

U.S. Cl. 369—41 **4 Claims**

2. An automatic music selecting device comprising:

an intersong sensor mounted on a pickup cartridge mounted on an arm for detecting intervals between adjacent songs on a recording disc upon movement of said arm;

a control unit for stopping said arm at a predetermined interval between adjacent songs on said recording disc, said control unit comprising a data buffer for storing a number of a selected song; a counter operating in response to said intersong sensor for counting intersong intervals; coincidence circuit means operating in response to said data buffer and said counter for producing a coincidence signal when a counted value of said counter coincides with a song number stored in said data buffer; and a flip-flop the operational state of which is controlled in accordance with said coincidence signal, first and second control signals being produced on non-inverted and inverted outputs of said flip-flip;

an intersong servo unit, said intersong servo unit comprising a first buffer amplifier having an input coupled to receive an output from said intersong sensor; a first analog switch having a signal input coupled to an output of said first

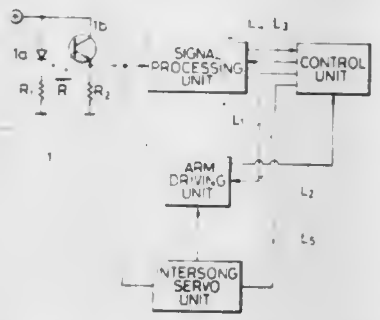

buffer amplifier and a control input coupled to receive said first control signal; a capacitor coupled between an output of said first analog switch and ground; a second analog switch having a signal input coupled to said output of said first analog switch and an output coupled to ground with a control input of said second analog switch being coupled to receive said first control signal; a second buffer amplifier having an input coupled to said output of said first analog switch, an operational amplifier having a non-inverting input coupled to said output of said first buffer amplifier and an inverting input coupled to an output of said second buffer amplifier; and a third analog switch having a signal input coupled to an output of said operational amplifier and a control input coupled to receive said second control signal; and

an arm driving unit operating in response to an output signal produced at an output of said third analog switch of said intersong servo unit.

4,375,093

INTERMUSIC DETECTING CIRCUIT FOR AUTOMATIC MUSIC SELECTING DEVICE

Shinya Takahashi, Tokorozawa, Japan, assignor to Pioneer Electronic Corporation, Tokyo, Japan

Filed Jul. 17, 1981, Ser. No. 284,022

Claims priority, application Japan, Jul. 17, 1980, 55-96871

Int. Cl.³ G11B *3/38, 17/06*

U.S. Cl. 369—41 **6 Claims**

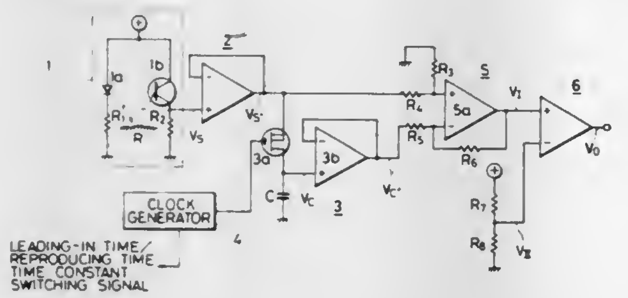

1. An intersong detecting circuit for an automatic music selecting device comprising:

an intersong sensor for detecting intersong intervals between adjacent songs on a recording disc;

means for sampling an output signal from said intersong sensor at a predetermined rate and holding the sampled signal;

means responsive to the held signal from said sampling and holding means and to said output from said sensor for comparing said held signal with said output from said sensor to thereby produce a differential signal;

means responsive to the differential signal from said comparing means for producing an intersong identification signal when said differential signal exceeds a predetermined threshold value; and

means for switching said sampling rate of said sampling and holding means between leading-in times and reproducing times of said recording disc.

4,375,094

APPARATUS FOR ADVANCING A VIDEO DISC PICKUP TRANSDUCER BEYOND A DISC RECORD DEFECT

Kevin C. Kelleher, Plainfield, and Todd J. Christopher, Indianapolis, both of Ind., assignors to RCA Corporation, New York, N.Y.

Filed Nov. 10, 1980, Ser. No. 205,342

Int. Cl.³ H04N *5/76*

U.S. Cl. 369—43 **9 Claims**

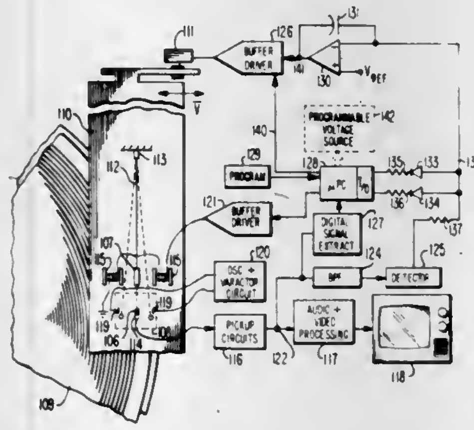

1. A video disc playback apparatus comprising:

a base for rotatably supporting a disc record, said record having information tracks thereon;

a signal pickup transducer for engaging said information track and recovering prerecorded signal therefrom; said pickup transducer secured to the first end of a stylus arm;

a carriage mechanism wherein a second end of said stylus arm is secured so that a longitudinal axis of the stylus arm is substantially tangential to an information track currently engaged by said pickup transducer, said carriage mechanism translating the secured end of the stylus arm in consonance with the radial travel of the pickup transducer across the disc record;

an electromechanical transducer cooperating with said stylus arm for selectively deflecting said pickup transducer radially across said information tracks;

motive means responsive to control signals for translating said carriage mechanism;

circuitry responsive to the relative carriage-stylus position for generating said control signals to maintain the stylus arm in a substantially mechanically unbiased condition relative to the carriage mechanism; and

means for selectively conditioning said circuitry to create a mechanical bias between the carriage and stylus arm thereby creating forces in a direction to aid or restrain deflection forces developed by said electromechanical transducer.

4,375,095

METHOD AND APPARATUS FOR TESTING STYLI

Eugene O. Keizer, Princeton, N.J., assignor to RCA Corporation, New York, N.Y.

Filed Jan. 5, 1981, Ser. No. 222,546

Int. Cl.³ H04N *5/76;* **G11B** *3/38*

U.S. Cl. 369—55 **19 Claims**

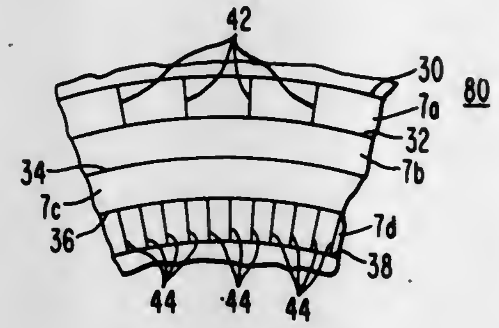

1. A test disc record for testing a capacitive playback stylus, said stylus formed of a stylus shoe which normally contacts a continuous spiral groove of a capacitive information disc record during normal playback and a stylus electrode which is used to recover information recorded in said capacitive information disc record by means of capacitance variations between the capactive information disc record and the stylus electrode, said stylus electrode adapted to be normally completely within said groove while said shoe is contacting said groove;

said test disc record including in a major surface a continuous spiral adapted to receive said stylus for testing the width or the symmetrical relationship of said electrode in said groove;

said spiral groove further being arranged into m groups or n contiguous turns, each turn of each of said groups having the same predetermined width wherein m and n are integers which have a value, respectively, of at least two;

a test signal recorded in at least one of said turns of each group of turns, said signal having a known amplitude and frequency,

whereby relative amplitude information of said signal recovered from each turn by measuring capacitance variations in each turn by said stylus electrode riding in said groove is an indication of the symmetry or width of said stylus electrode relative to said grooves.

4,375,096

MULTI-BANDWIDTH OPTICAL PLAYBACK APPARATUS WITH ELONGATED READ SPOT

Istvan Gorog, Princeton, and Michael J. Lurie, East Brunswick, both of N.J., assignors to RCA Corporation, New York, N.Y.

Filed Mar. 10, 1981, Ser. No. 242,250

Int. Cl.³ G11B *7/00, 7/18, 27/36, 11/18*

U.S. Cl. 369—102 **15 Claims**

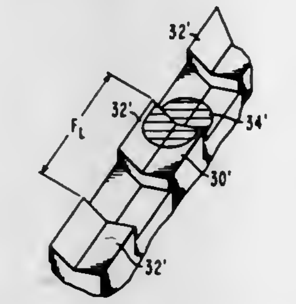

1. An optical playback system for recovering from a storage medium data recorded in an information track including data recorded within a first given band of low frequencies and data recorded within a second given band of high frequencies, said information track having a succession of undulations representative of said data along the length thereof, said system comprising:

an objective lens for focusing a light beam to a spot on said information track, said light spot having a dimension in a direction along the length of said information track, said objective lens having a given numerical aperture;

means for establishing relative motion between said light spot and said information track;

means, responsive to the interaction of said focused light and said undulations during the occurrence of said relative motion, for developing signals representative of the data recorded in said information track; and

means for modifying the shape of said light beam such that a substantial portion of the light incident on said developing means contains information representative of said recorded data and passes through said objective lens near the optical axis of a light path therethrough, said dimension of said light spot along said length of said information track being lengthened to reduce the frequency response of said optical system, recovery of said data recorded within said first given band of low frequencies being improved by modifying the shape of said light beam.

4,375,097

TRANSPARENT INTELLIGENT NETWORK FOR DATA AND VOICE

Mehmet E. Ulug, Ottawa, Canada, assignor to Texas Instruments Incorporated, Dallas, Tex.

Continuation of Ser. No. 912,114, Jun. 2, 1978, abandoned. This application May 15, 1980, Ser. No. 150,265

Int. Cl.³ H04J *6/00*

U.S. Cl. 370—94 **14 Claims**

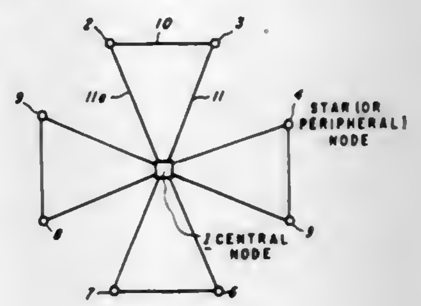

1. A communications network having a plurality of peripheral and central communications nodes, a first plurality of terrestrial communications links connecting said central nodes directly to each other, a second plurality of terrestrial communications links individually connecting said peripheral nodes to said central nodes, means for connecting a plurality of customers to each peripheral node, certain of said means being effective to input data at a first given speed and certain others for inputting data at a different speed, developing means at each of said nodes for successively developing at a first repetition rate multi-user packets each containing data from at least two of said plurality of customers connected to that node, said developing means including means effective in a first mode for sampling data input from said customers at intervals directly related to their output speeds at the exit node and, when in another mode, effective upon the existence of available channel space, at speeds higher than said output speeds at the exit node, and means connected to said peripheral node for conducting said multi-user packets to other nodes within said network.

4,375,098
DIGITAL TELECOMMUNICATIONS SYSTEM

Peter Gerke, Graefelfing; Gerhard Arndt, Holzkirchen; Friedrich Roescheisen, Graefelfing, and Heinrich Bruentrup, Munich, all of Fed. Rep. of Germany, assignors to Siemens Aktiengesellschaft, Berlin and Munich, Fed. Rep. of Germany

Filed Jul. 2, 1980, Ser. No. 165,297

Claims priority, application Fed. Rep. of Germany, Jul. 26, 1979, 2930420

Int. Cl.³ H04J *3/12*

U.S. Cl. 370—110.1 5 Claims

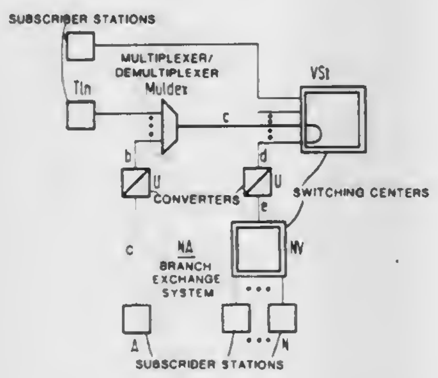

1. A digital communications system which operates with outslot signaling in outslot signal channels provided outside of the communications band of communications channels and with inslot signaling within a communications channel, comprising:
   - connection means for establishing a connection between two telecommunication locations including connection segments in a communications channel not having an outslot signal channel; and
   - signaling means operable to provide outslot signaling in an inslot-outband-subchannel within the communications channel and outside of the communications band of the communications channel employed for actual message transmission.

4,375,099
LINK PERFORMANCE INDICATOR WITH ALTERNATE DATA SAMPLING AND ERROR INDICATION GENERATION

George W. Waters, Indialantic, and Michael B. Luntz, Melbourne Beach, both of Fla., assignors to Harris Corporation, Melbourne, Fla.

Filed Apr. 8, 1980, Ser. No. 138,456

Int. Cl.³ G06F *11/30*

U.S. Cl. 371—6 12 Claims

1. A data transmission error detection system for analyzing incoming analog data signals representing a sequence of equal amplitude ones and zeroes, comprising:
   - gate control means for generating a repetitive window defining gating signal at repetitive selected sampling times within a data burst from a particular transmitting station occurring at a regularly-spaced rate;
   - pulse signal averaging means, controlled by a gating signal generated by said gate control means and coupled to receive an incoming analog data signal, for generating an output corresponding to the average level of successive samples of said incoming analog data signal of a like polarity; and
   - comparator means for comparing a prescribed fraction of the output of said pulse signal averaging means with the level of said incoming analog data signal at repetitive respective comparison times and outputting a pseudo-error indication signal in response to the level of said incoming analog data signal failing to exceed the level of

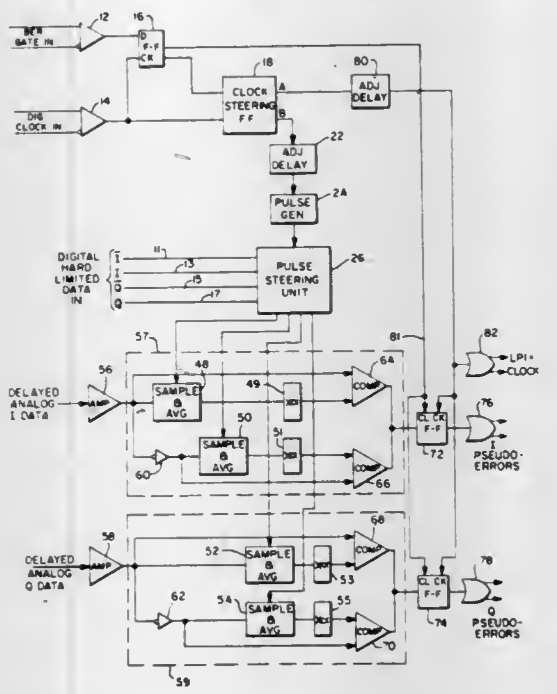

said prescribed fraction of the output of said pulse signal averaging means at a respective comparison time.

4,375,100
METHOD AND APPARATUS FOR ENCODING LOW REDUNDANCY CHECK WORDS FROM SOURCE DATA

Shiro Tsuji, Minoo; Hiroshi Matsushima, Hirakata; Yasuharu Shimeki, Suita; Nobuyoshi Kihara, Amagasaki, and Misao Kato, Neyagawa, all of Japan, assignors to Matsushita Electric Industrial Company, Limited, Osaka, Japan

Filed Oct. 23, 1980, Ser. No. 199,703

Claims priority, application Japan, Oct. 24, 1979, 54-137122; Feb. 29, 1980, 55-25588; Jun. 11, 1980, 55-79558

Int. Cl.³ G06F *11/10*

U.S. Cl. 371—38 14 Claims

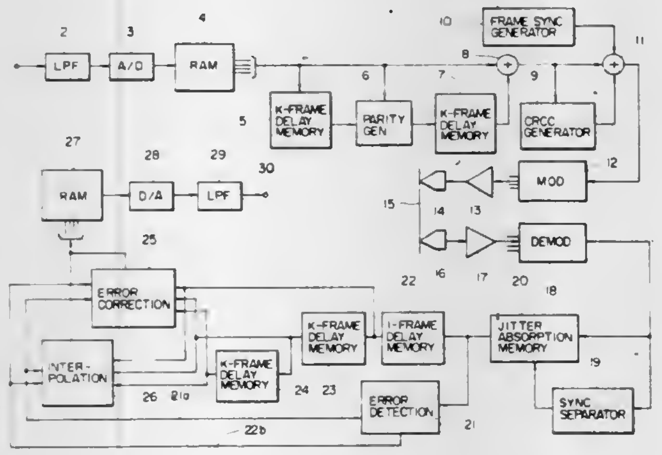

1. A method of processing data words comprising the steps of organizing the data words into successive patterns of rows and columns, deriving a plurality of first parity words from columnwise data words of each pattern, arranging the first parity words in a row parallel to the rows of data words, deriving a plurality of second parity words from diagonally arranged data words of each pattern, arranging the second parity words in a pattern of rows and columns in succession to the pattern of data words, generating a check code word, and appending the check code word to each row of said data and first and second parity words for enabling detection of errors in each row.

4,375,101
SYSTEM FOR FORMATTING DATA ON VIDEO TAPE FOR HIGH ACCURACY RECOVERY

Nicholas Cerracchio, Las Vegas, Nev., assignor to Video Education, Inc., Reno, Nev.

Filed Sep. 30, 1980, Ser. No. 192,226

Int. Cl.³ G06F *11/08*

U.S. Cl. 371—69 10 Claims

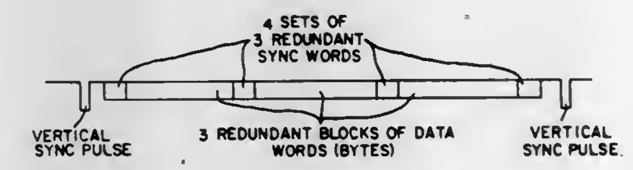

1. A prerecorded tape adapted to be played on a video tape player to recover information thereon, said tape having binary data recorded on the video signal track thereof in a prearranged format comprising at least three redundant blocks of data words between successive vertical sync pulses recorded on said video signal track.

4,375,102
DIGITAL CODE WORD DETECTION

Andreas J. W. Van Daal, Hilversum, Netherlands, assignor to U.S. Philips Corporation, New York, N.Y.

Filed Jul. 29, 1980, Ser. No. 173,309

Claims priority, application Netherlands, Aug. 3, 1979, 7905968

Int. Cl.³ H04L *7/02*

U.S. Cl. 375—94 9 Claims

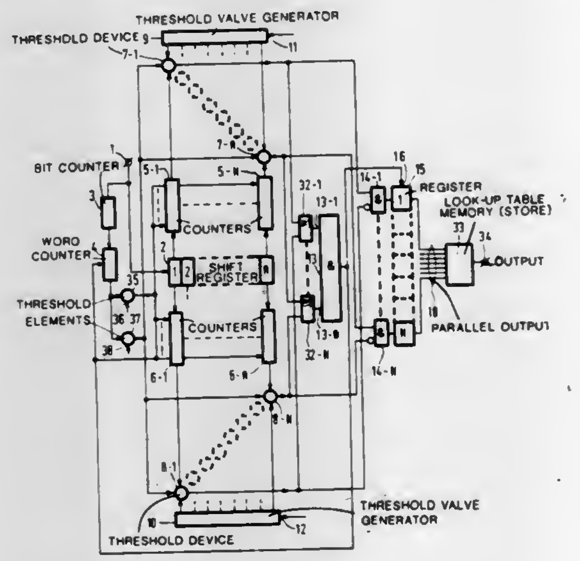

1. A method of detecting a message in the form of a digital code word, the digital code word containing a sequence of a predetermined number of bits and being included a few times consecutively and sequentially in a bit stream, characterized in that
   - the bit stream is randomly divided into data blocks, each data block having a number of bits which is equal to the number of bits of the digital code word;
   - the digital bit state is determined and recorded for each bit position in the data block;
   - the recorded data of each bit position are accumulated for a plurality of consecutive data blocks;
   - the accumulated value of the recorded data of each bit position for a plurality of data blocks is compared with a threshold value;
   - the digital code word is detected from the digital state of the accumulated values when the threshold value for each bit position in a plurality of data blocks has at least been reached.

4,375,103
METHOD AND APPARATUS OF SIGNALLING REQUEST TO SEND CLEAR TO SEND DELAY

August P. Arneth, Raleigh, and Curtis L. Foshee, Cary, both of N.C., assignors to International Business Machines Corp., Armonk, N.Y.

Filed Sep. 17, 1980, Ser. No. 187,901

Int. Cl.³ H04L *7/00;* H03K *1/17*

U.S. Cl. 375—109 2 Claims

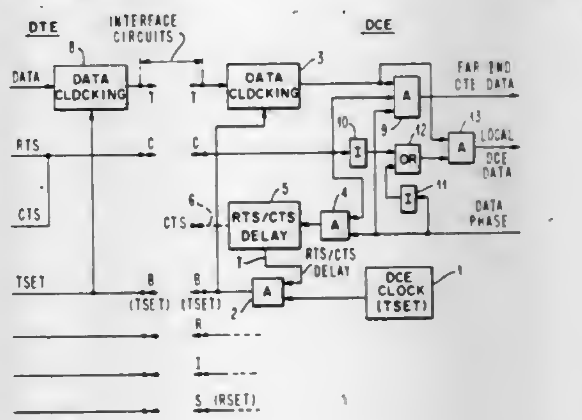

2. In a data communications system interface defining the connection between two communications terminals or systems comprising a local unit and a remote unit, and in which the communications interface includes a timing clock signal output line and a request to send line but does not include a separate control line for granting to a remote requesting station a clear to send authorization control signal, an improved method of indicating the delay period between a request to send signal receipt and an establishment of carrier synchronization and frequency so that transmission may begin, comprising steps at said local unit of:
   - detecting a request to send input from said remote unit at said local unit;
   - initiating a delay period in response to detecting said request to send signal; and
   - interrupting said timing clock signal output line in response to said receipt of request to send signal; and
   - re-establishing said transmission clock signal output in response to the completion of said delay period, thereby permitting said remote equipment to begin transmission.

4,375,104
POOL GATEWAY SEAL

James A. Starr, and Leopold A. Steinert, both of San Jose, Calif., assignors to General Electric Company, San Jose, Calif.

Filed Aug. 20, 1979, Ser. No. 68,191

Int. Cl.³ G21C *13/02;* G21D *1/02*

U.S. Cl. 376—203 3 Claims

1. In a nuclear facility including interconnectable pools having a substantially vertically disposed gateway, means for providing a barrier to liquid flow between said pools comprising: a substantially vertically disposed frame removably positionable in said gateway and having a liquid impermeable sheet sealed thereon; an inflatable sealing tube mounted in a channel providing in the sides of said frame corresponding to said gateway, said tube engaging said gateway when inflated to effect a seal between said gateway and said frame; said channel of said frame being deeper than the thickness of said sealing tube when uninflated; a support ledge extending across at least the bottom of said gateway and having a sealing surface extending perpendicular to the plane of said frame when said frame is positioned in said gateway; at least one hook plate mounted for pivotal movement about an edge provided on said frame and cooperating with a spring for normally biasing said hook plate into an engagable position with said support ledge;

and means remotely actuatable from the side of said hook plate and cooperating with said hook plate to effect the release

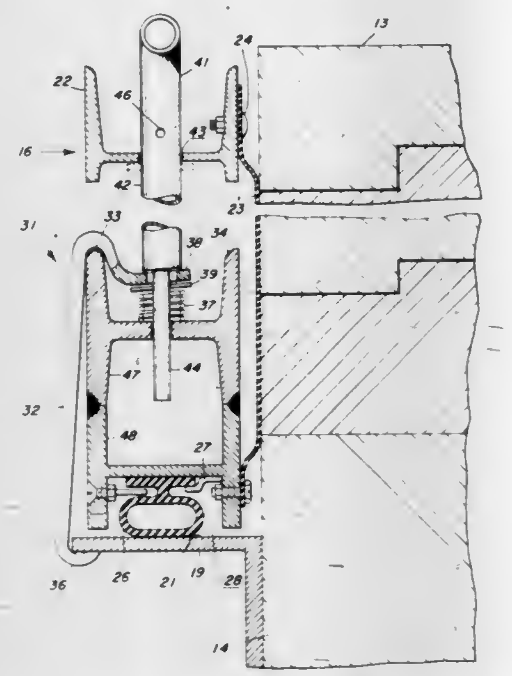

thereof from said engagable position with respect to said support ledge.

4,375,105
X-RAY DIAGNOSTIC GENERATOR

Heinz Baumann, Erlangen-Buckenhof, Fed. Rep. of Germany, assignor to Siemens Aktiengesellschaft, Berlin & Munich, Fed. Rep. of Germany

Continuation-in-part of Ser. No. 960,861, Nov. 15, 1978. This application Aug. 29, 1980, Ser. No. 182,689

Claims priority, application Fed. Rep. of Germany, Jan. 20, 1978, 7801673[U]

Int. Cl.³ H05G *1/02, 1/32*

U.S. Cl. 378—092 **2 Claims**

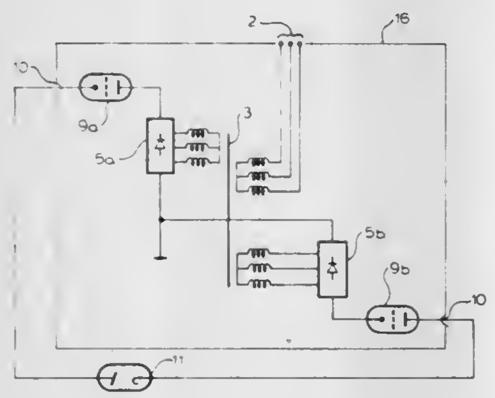

1. In an X-ray diagnostic generator suitable for use with a plurality of externally located X-ray tubes, having a high voltage step-up transformer with a secondary connected to high voltage means for rectification, an improvement comprising:

a single, oil filled, closed housing having AC input connection means connected to a primary of the high voltage step-up transformer, output high voltage connection means adapted to be switchably connected to the plurality of X-ray tubes to supply high voltage between an anode and a cathode of a selected X-ray tube, and

first and second high voltage control means responsive to external control via control leads, each of said control means being connected between a rectified output of a corresponding one of the high voltage means for rectification and a corresponding section of said output high voltage connection means, each of said high voltage control means being adapted to regulate the output high voltage, and

said high voltage step-up transformer being positioned and of sufficient dimensions to provide electrical shielding, said high voltage step-up transformer being positioned between said first and second control means to provide electrical shielding therebetween.

4,375,106
REMOTE CONTROL CIRCUIT

Walter Voll, Nikolaus-Fey-Strasse 2, Hassfurt 8728, Fed. Rep. of Germany

Filed Dec. 11, 1980, Ser. No. 215,467

Claims priority, application Fed. Rep. of Germany, Dec. 22, 1979, 2951974; Dec. 22, 1979, 2951975; Dec. 22, 1979, 2951976

Int. Cl.³ H04B *9/00*

U.S. Cl. 455—603 **10 Claims**

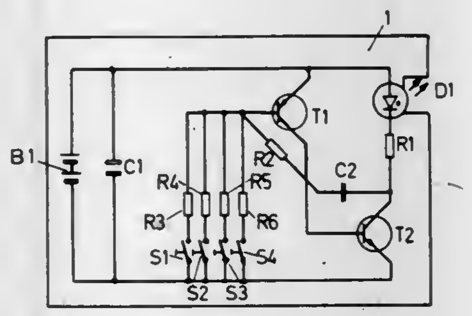

1. A remote control circuit for controlling one or more functions in a device, said circuit comprising a transmitter for transmitting control signal pulses and a receiver for receiving and evaluating said pulses, wherein the transmitter comprises

(a) a monostable multivibrator for generating a cyclically repetitive train of pulses at determinable intervals and comprising two complementary transistors and a resistive-capacitive coupling, the collector of a first one of said of transistors being connected to the base of the second one of said transistors and the collector of said second transistor being coupled to the base of said first transistor by way of said resistive-capacitive coupling;

(b) switching means;

(c) pulse interval determining means for determining different pulse intervals for said train and corresponding in number to the number of said functions and controllable by said switching means to cause a control signal pulse transmission of the transmitter to have a selected one of said intervals; and

(d) signal pulse transmitting means connected to the collector of said second transistor to provide a control signal pulse transmission with the selected pulse interval; and

wherein the receiver comprises

(a) signal pulse receiving means for receiving signal pulse transmissions from said signal pulse transmitting means;

(b) a resistor-capacitor charging circuit in which the capacitor is so chargeable via the resistor and dischargeable by each pulse of a received signal pulse transmission as to provide an output sawtooth voltage having a peak magnitude dependent on the selected pulse interval;

(c) a filter stage connected to said resistor-capacitor charging circuit to filter said output voltage thereof; and

(d) a voltage level detecting stage connected to said filter stage to detect the level of the voltage filtered by said stage and to control a respective function of said device which is associated with the detected voltage level.

DESIGN PATENTS

GRANTED FEB. 22, 1983

ERRATA

For CLASS	See PATENT NO.
D32–066	267,997
D23–138	267,998

DESIGNS

FEBRUARY 22, 1983

267,986
BRUSH FOR APPLYING MAKEUP
Milton O. Flower, Van Nuys, Calif., assignor to Max Factor & Co., Hollywood, Calif.
Filed Dec. 22, 1980, Ser. No. 218,842
Term of patent 14 years
Int. Cl. D4—*02*
U.S. Cl. D4—25

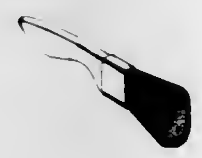

267,987
TREATMENT CHAIR
Dennis F. Leffler, Charlotte; Danny M. Truette, Pineville, both of N.C., and Edward C. Landan, Fort Mill, S.C., assignors to The Pelton & Crane Company, Charlotte, N.C.
Filed Feb. 13, 1981, Ser. No. 234,123
Term of patent 14 years
Int. Cl. D6—*01*
U.S. Cl. D6—22

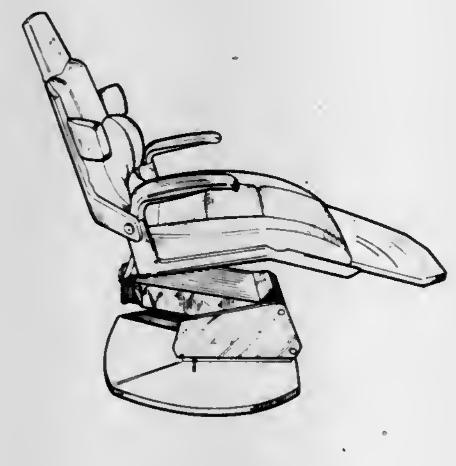

267,988
OPENABLE TABLE
Gabriella Crespi, Via Montenapoleone 2, Milan, Italy
Filed Jan. 11, 1980, Ser. No. 111,224
Claims priority, application Italy, Jul. 12, 1979, 22091B/79
Term of patent 14 years
Int. Cl. D6—*03*
U.S. Cl. D6—27

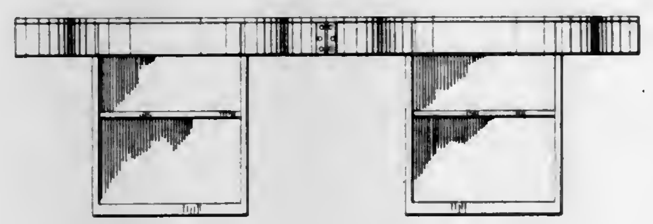

267,989
CHAIR
Randall P. Buhk, Wyoming; Kenneth W. Hozeski, Grandville, and Alex Karrip, Grand Rapids, all of Mich., assignors to Steelcase Inc., Grand Rapids, Mich.
Filed Nov. 5, 1979, Ser. No. 91,695
The portion of the term of this patent subsequent to Feb. 22, 1997, has been disclaimed.
Term of patent 14 years
Int. Cl. D6—*01*
U.S. Cl. D6—30

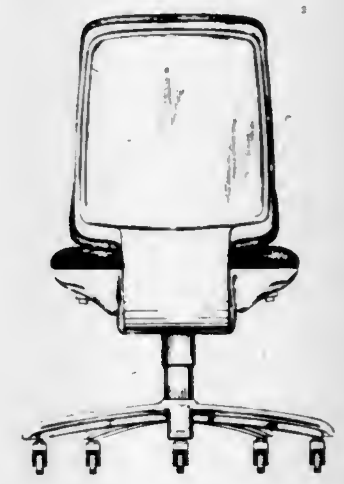

267,990
CHAIR
Randall P. Buhk, Wyoming; Kenneth W. Hozeski, Grandville, and Alex Karrip, Grand Rapids, all of Mich., assignors to Steelcase Inc., Grand Rapids, Mich.
Filed Nov. 5, 1979, Ser. No. 91,693
The portion of the term of this patent subsequent to Feb. 22, 1997, has been disclaimed.
Term of patent 14 years
Int. Cl. D6—*01*
U.S. Cl. D6—31

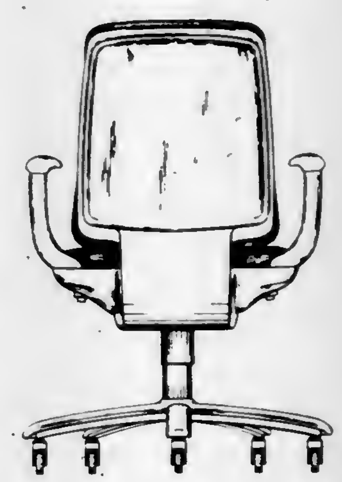

267,991
CHAIR
Henry Olko, Chicken Valley Rd., Locust Valley, N.Y. 11650
Filed Oct. 23, 1980, Ser. No. 199,860
Term of patent 14 years
Int. Cl. D6—*01*

U.S. Cl. D6—57

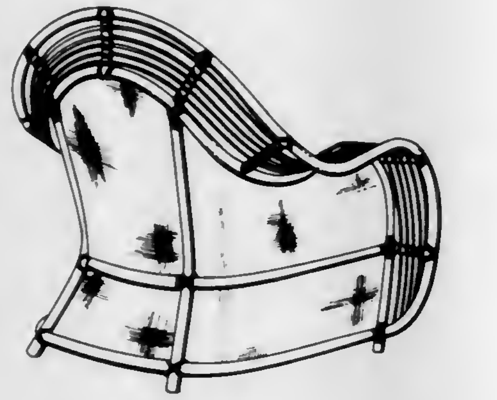

267,992
DISPLAY FIXTURE
Robert N. Shelton, Leominster, Mass., assignor to Foster Grant Corporation, Leominster, Mass.
Filed May 14, 1980, Ser. No. 149,788
Term of patent 14 years
Int. Cl. D06—*06*

U.S. Cl. D6—85

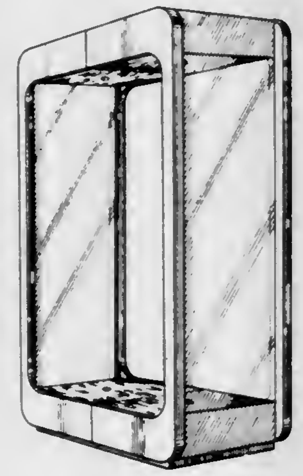

267,993
TOOTH PASTE DISPENSER
Gilbert E. Barrera, 11845 West Ave., San Antonio, Tex. 78216
Filed Aug. 5, 1980, Ser. No. 175,492
Term of patent 14 years
Int. Cl. D23—*02*

U.S. Cl. D6—87

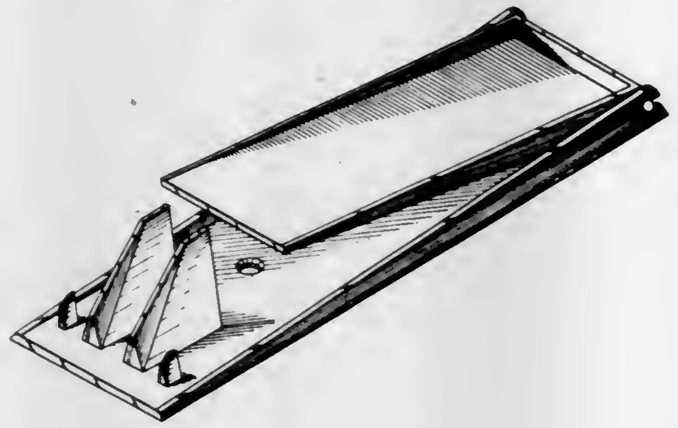

267,994
FOOD PRODUCT ASSEMBLY TABLE
Norman E. Luzich, Wichita, Kans., assignor to Pizza Hut, Inc., Wichita, Kans.
Filed Sep. 22, 1980, Ser. No. 189,696
Term of patent 14 years
Int. Cl. D06—*04*

U.S. Cl. D6—160

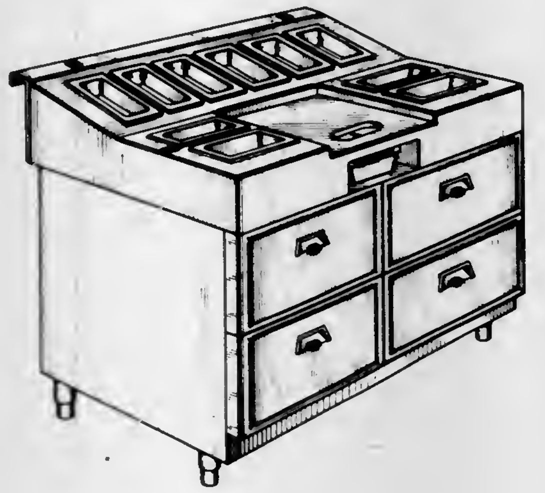

267,995
ANIMATED DISPLAY
Harvey E. Bullard, 4250 Marine Dr., Chicago, Ill. 60613
Filed Nov. 21, 1980, Ser. No. 208,883
Term of patent 14 years
Int. Cl. D20—*02*

U.S. Cl. D6—172

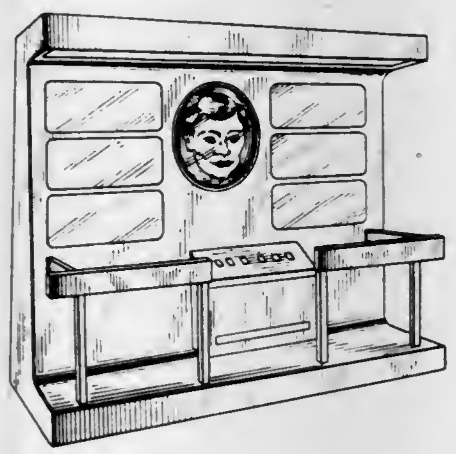

267,996
FOOD MINCER
Eugene Kowalski, South Orange, N.J., assignor to ELPO Industries, Inc., Paramus, N.J.
Filed Dec. 8, 1980, Ser. No. 213,905
Term of patent 14 years
Int. Cl. D07—*04*

U.S. Cl. D7—101

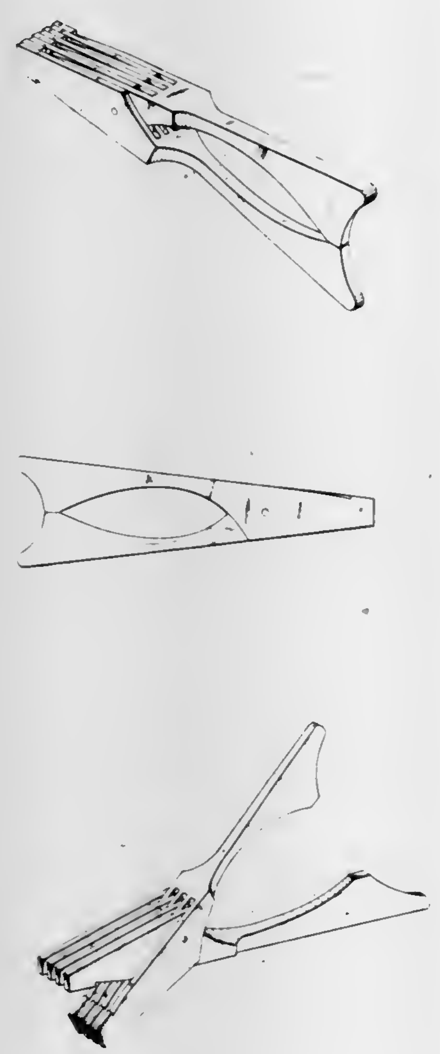

267,997
FRAME FOR IRONING BOARD
Dan A. B. Pettersson, Hillerstorp, Sweden, assignor to AB Jarnarmatur, Hillerstorp, Sweden
Filed May 4, 1978, Ser. No. 903,032
Claims priority, application Sweden, Nov. 8, 1977, 772273
Term of patent 14 years
Int. Cl. D7—*05*

U.S. Cl. D32—66

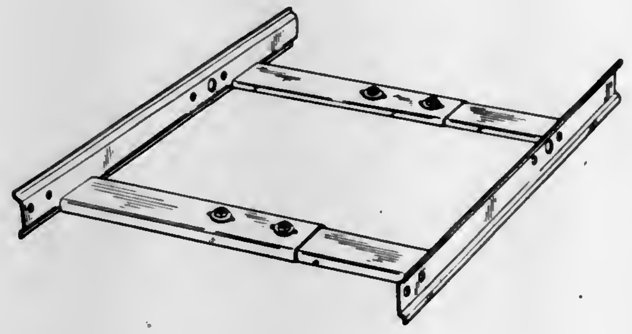

267,998
FIREPLACE WOODBIN
Benjamin A. Rhoades, Rte. 1, Box 126, Arroyo Grande, Calif. 93420
Filed Sep. 12, 1980, Ser. No. 186,712
Term of patent 14 years
Int. Cl. D7—*08*

U.S. Cl. D23—138.5

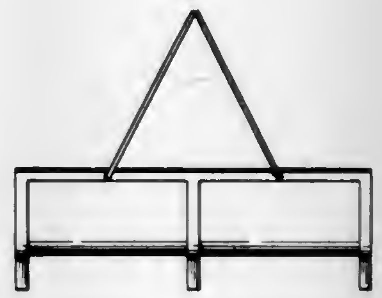

267,999
FIREPLACE POKER
Benjamin A. Rhoades, Rte. 1, Box 126, Arroyo Grande, Calif. 93420
Filed Sep. 12, 1980, Ser. No. 186,714
Term of patent 14 years
Int. Cl. D7—*08*

U.S. Cl. D8—14

268,000
ROTARY CULTIVATING TOOL
Henry P. Dellinger, 1036 Pineglen Dr., Forest Park, Ga. 30050
Filed Dec. 4, 1980, Ser. No. 213,189
Term of patent 14 years
Int. Cl. D8—*01*
U.S. Cl. D8—08

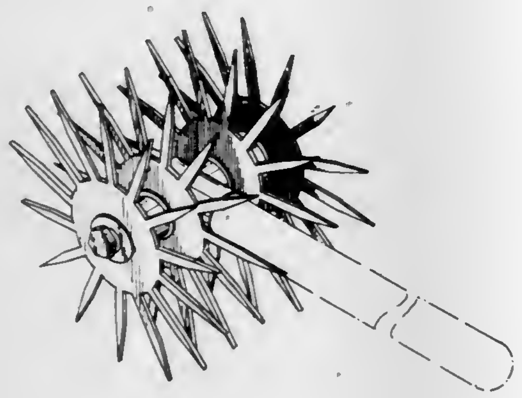

268,001
STRIPPING TOOL FOR USE ON CONCRETE FORMS OR THE LIKE
Barry E. Balz, 1480 N.W. 203rd St., Miami, Fla. 33169
Filed Sep. 12, 1980, Ser. No. 186,527
Term of patent 14 years
Int. Cl. D8—*05*
U.S. Cl. D8—14

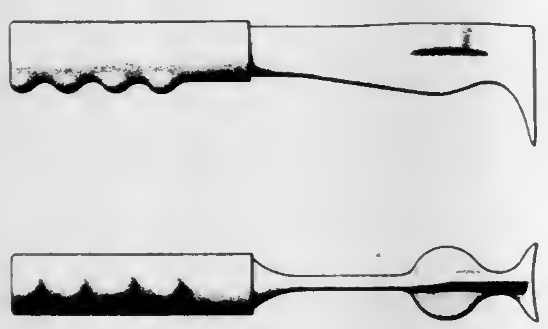

268,002
WIRE NIPPERS
Bengt Brunosson, Enköping, and Lars Erlandsson, Eskilstuna, both of Sweden, assignors to AB Bahco Verktyg, Enkoping, Sweden
Filed Sep. 19, 1979, Ser. No. 76,917
Claims priority, application Sweden, Mar. 19, 1979, 79-0722
Term of patent 14 years
Int. Cl. D8—*05*
U.S. Cl. D8—58

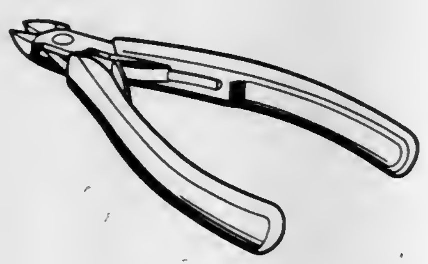

268,003
EXIT OPERATOR
Richard J. Ohno, 38 Orchard Hill Rd., Branford, Conn. 06405
Filed Oct. 16, 1980, Ser. No. 197,509
Term of patent 14 years
Int. Cl. D8—*06*
U.S. Cl. D8—302

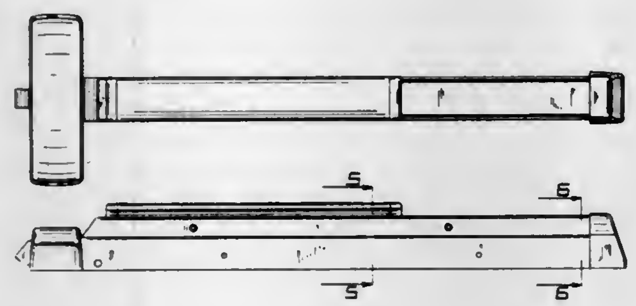

268,004
CONTROL PANEL FOR COMBINATION LOCK AND THE LIKE
Edward M. Stolarz, Yorktown Heights, N.Y., assignor to Presto Lock, Inc., Garfield, N.J.
Filed Oct. 9, 1980, Ser. No. 195,362
Term of patent 14 years
Int. Cl. D8—*07*
U.S. Cl. D8—331

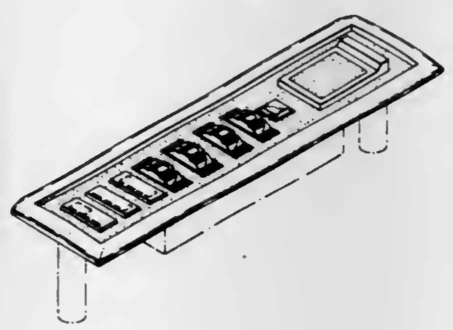

268,005
SHANK PORTION OF A SHOWER CURTAIN HOOK OR THE LIKE
Noel Levine, New York, N.Y., assignor to Associated Products, Inc., New York, N.Y.
Continuation-in-part of Ser. No. 119,082, Feb. 21, 1980, which is a continuation of Ser. No. 622,185, Oct. 10, 1975, abandoned.
This application Apr. 2, 1980, Ser. No. 136,509
Term of patent 14 years
Int. Cl. D8—*08*
U.S. Cl. D8—367

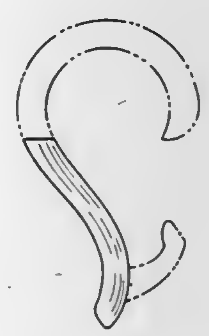

268,006
DRIVE FASTENER
Burnell J. Wollar, Barrington, Ill., assignor to Phillips Plastics Corporation, Phillips, Wis.
Filed Oct. 27, 1980, Ser. No. 201,244
Term of patent 14 years
Int. Cl. D8—*08*
U.S. Cl. D8—393

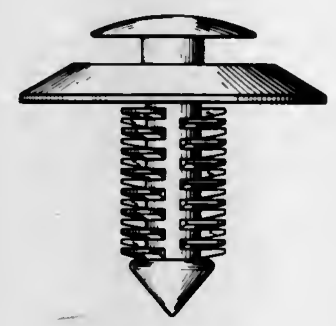

268,007
CHOCK FOR CONTAINERS, ICE CHESTS, STORAGE BOXES OR THE LIKE
Walter H. Zinnecker, 9626 Radio Rd., Houston, Tex. 77075
Filed Sep. 3, 1980, Ser. No. 184,257
Term of patent 14 years
Int. Cl. D8—*99*
U.S. Cl. D8—403

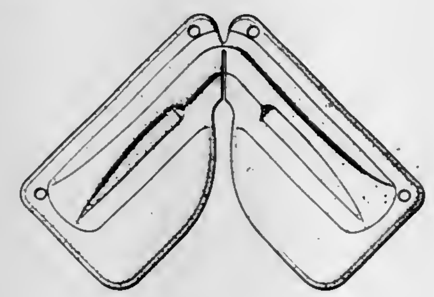

268,008
FLASK OR SIMILAR ARTICLE
Frank H. Witt, Jr., Trumbull, Conn., assignor to Rosalie S. Levine, Trumbull; Mildred J. Bisacca, Fairfield and GRRN Co., Easton, all of, Conn.
Filed Oct. 15, 1980, Ser. No. 197,337
Term of patent 14 years
Int. Cl. D9—*01*
U.S. Cl. D9—307

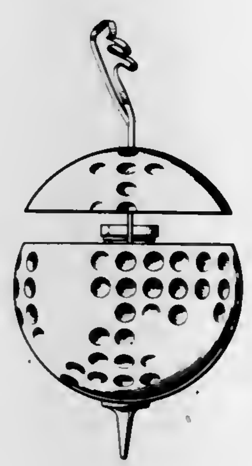

268,009
CONTAINER FOR PERFUME
Aaron Hirsh, 8 Chatham St., Deer Park, N.Y. 11729
Filed Jan. 30, 1981, Ser. No. 229,965
Term of patent 14 years
Int. Cl. D9—*01*
U.S. Cl. D9—354

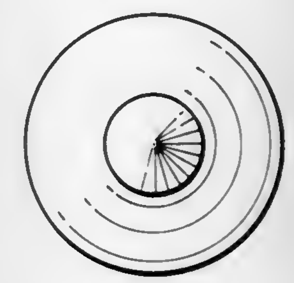

268,010
DISPLAY CARD
John D. O'Brien, Palmer, Mass., assignor to Wm. E. Wright Co., West Warren, Mass.
Filed Jun. 15, 1981, Ser. No. 273,983
Term of patent 14 years
Int. Cl. D9—*99*
U.S. Cl. D9—457

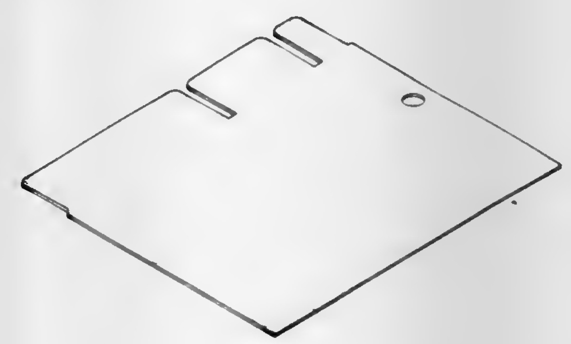

268,011
DESK CHRONOMETER
Charles S. Bryk, New Canaan, Conn., and Paul C. Batto, Brooklyn, N.Y., assignors to Texasgulf Inc., Stamford, Conn.
Filed Oct. 9, 1980, Ser. No. 195,363
Term of patent 14 years
Int. Cl. D10—*04*
U.S. Cl. D10—15

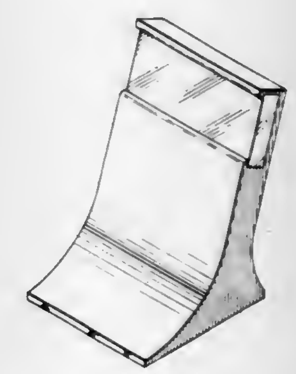

268,012
BURGLAR ALARM
Akira Mihara, Tokyo, Japan, assignor to Nohmi Bosai Kogyo Co., Ltd., Tokyo, Japan
Filed Oct. 1, 1980, Ser. No. 192,926
Claims priority, application Japan, May 29, 1980, 55-21024
Term of patent 14 years
Int. Cl. D10—*05*
U.S. Cl. D10—106

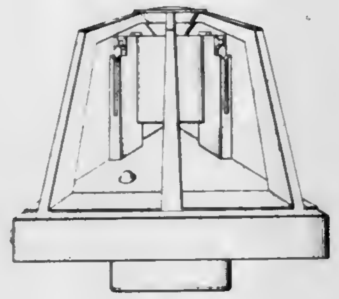

268,013
RING
Alan J. Stimmler, 11640 N. Scottsdale Rd., Scottsdale, Ariz. 85254
Filed Feb. 5, 1981, Ser. No. 231,937
Term of patent 14 years
Int. Cl. D11—*01*
U.S. Cl. D11—27

268,014
HELMET RING
William J. Sears, 3013 Pico Blvd., Santa Monica, Calif. 90405, and Gary Hudson, 1658 Kaweah Dr., Pasadena, Calif. 91105
Filed Dec. 22, 1980, Ser. No. 218,649
Term of patent 14 years
Int. Cl. D11—*01*
U.S. Cl. D11—30

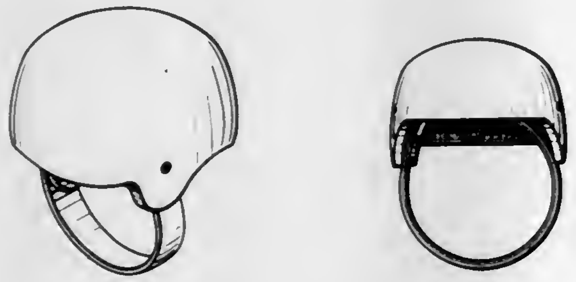

268,015
FINGER RING OR SIMILAR ARTICLE
Josef J. Barr, 125 Worth Ave., Palm Beach, Fla. 33480
Filed Jul. 7, 1980, Ser. No. 166,308
Term of patent 14 years
Int. Cl. D11—*01*
U.S. Cl. D11—39

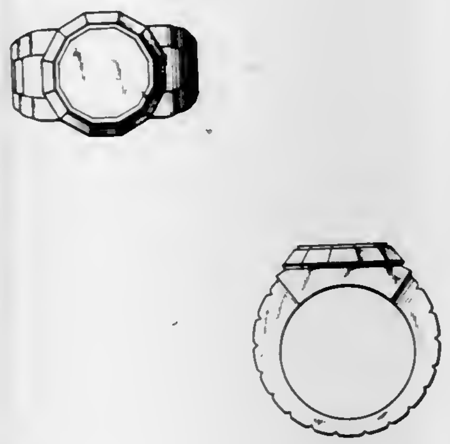

268,016
EARRING
Alvin Block, Bedford, N.Y., assignor to Intimate Jewels, Inc., Katonah, N.Y.
Continuation-in-part of Ser. No. 73,489, Sep. 7, 1979, Pat. No. D. 262,272. This application Sep. 2, 1980, Ser. No. 183,029
Term of patent 14 years
Int. Cl. D11—*01*
U.S. Cl. D11—75

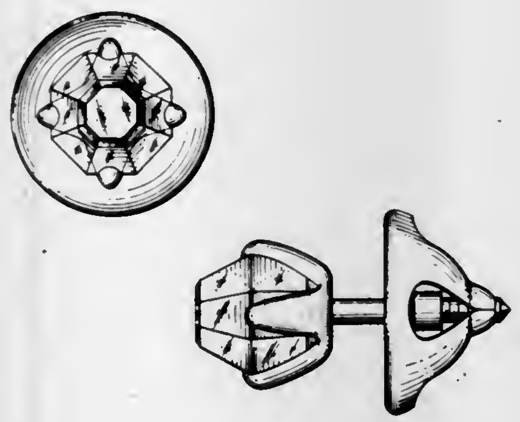

268,017
WALKER
Morton I. Thomas, Nyack, N.Y., assignor to Temco Products, Inc., Passaic, N.J.
Filed Aug. 26, 1980, Ser. No. 181,370
Term of patent 14 years
Int. Cl. D12—*12*
U.S. Cl. D12—130

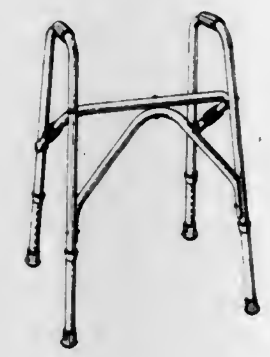

268,018
TIRE FOR A VEHICLE WHEEL
Douglas J. Major, and Peter R. Marriott, both of Sutton Coldfield, England, assignors to Dunlop Limited, London, England
Filed Jul. 9, 1980, Ser. No. 167,063
Claims priority, application United Kingdom, Feb. 2, 1980, 993438/80
Term of patent 14 years
Int. Cl. D12—*15*
U.S. Cl. D12—146

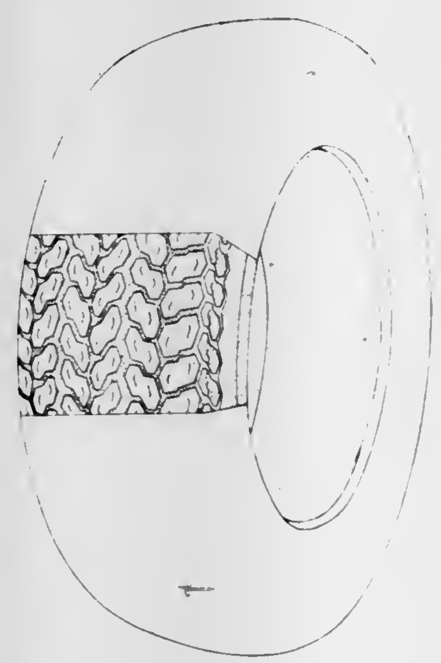

268,019
TIRE FOR A VEHICLE WHEEL
Douglas J. Major; Peter R. Marriott, and Claude A. Hart, all of Sutton Coldfield, England, assignors to Dunlop Limited, London, England
Filed Jul. 10, 1980, Ser. No. 168,413
Claims priority, application United Kingdom, Feb. 2, 1980, 993440/80
Term of patent 14 years
Int. Cl. D12—*15*
U.S. Cl. D12—151

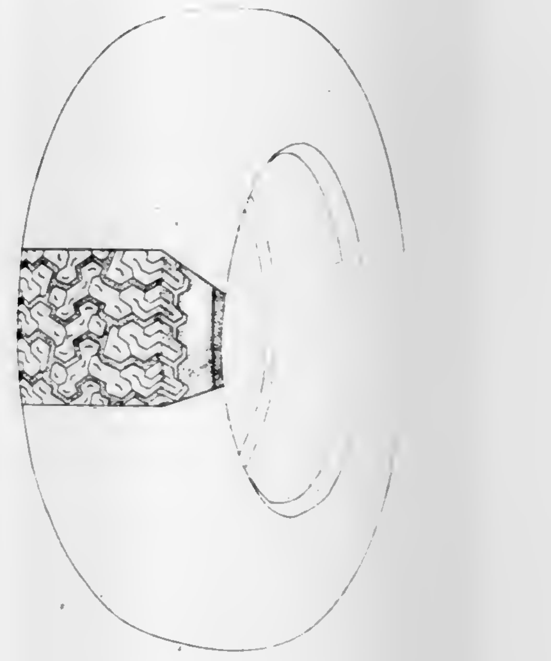

268,020
WINDSHIELD WIPER
Pierre G. Duvoux, Ballainvilliers, France, assignor to Equipements Automobiles Marchal, Issy-les-Moulineux, France
Filed Aug. 13, 1980, Ser. No. 177,715
Claims priority, application France, Feb. 19, 1980, 800407
Term of patent 14 years
Int. Cl. D12—*16*
U.S. Cl. D12—155

268,021
NOSE FAIRING FOR A TRUCK BODY OR THE LIKE
Nathaniel C. Wiley, Jr., and Henry A. Rudkin, Jr., both of Weston, Conn., assignors to Rudkin-Wiley Corporation, Stratford, Conn.
Filed Jul. 22, 1980, Ser. No. 171,042
Term of patent 14 years
Int. Cl. D12—*16*
U.S. Cl. D12—181

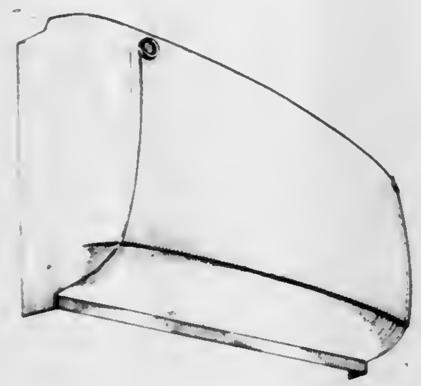

268,022
DYNAMOELECTRIC MACHINE END CAP
Henry G. Lenz, and Earl K. Stewart, both of Schenectady, N.Y., assignors to General Electric Company, Schenectady, N.Y.
Filed May 19, 1980, Ser. No. 150,858
Term of patent 14 years
Int. Cl. D13—*01*
U.S. Cl. D13—3

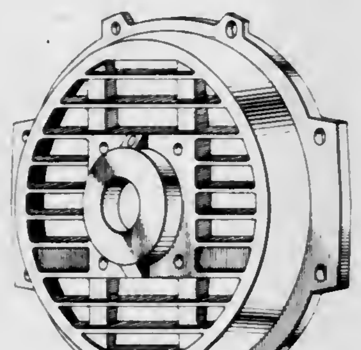

268,023
BATTERY CHARGER
Jeffrey A. Boyd, Gainesville, Fla., assignor to General Electric Company, Gainesville, Fla.
Filed Mar. 27, 1980, Ser. No. 134,409
Term of patent 14 years
Int. Cl. D13—*02*
U.S. Cl. D13—5

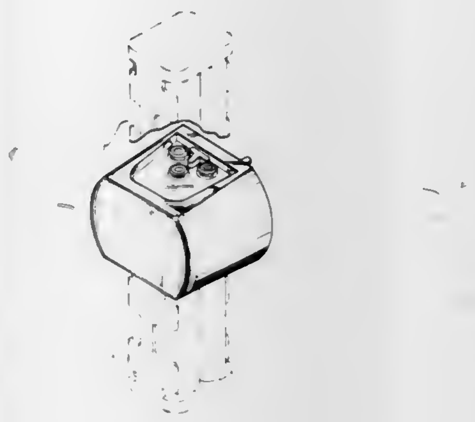

268,024
POWER SUPPLY UNIT
Kenneth C. Litt, and Jean C. Fielder, both of Silver Spring, Md., assignors to Pace Incorporated, Laurel, Md.
Filed Mar. 27, 1980, Ser. No. 134,479
Term of patent 14 years
Int. Cl. D13—*03*
U.S. Cl. D13—11

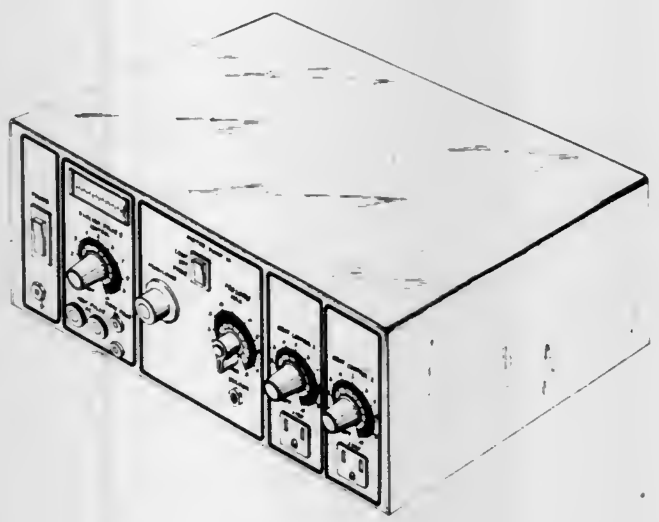

268,025
CONTROL PANEL FOR ELEVATOR SYSTEMS
Ernest M. Bevilaqua, Wilton; Allan L. McCroskery, Weston, both of Conn., and Theodore N. Knerr, New York, N.Y., assignors to Otis Elevator Company, Farmington, Conn.
Filed Feb. 2, 1981, Ser. No. 230,842
Term of patent 14 years
Int. Cl. D10—*06*; D13—*03*
U.S. Cl. D13—35

268,026
CONTROL PANEL FOR ELEVATOR SYSTEMS
Ernest M. Bevilaqua, Wilton; Allan L. McCroskery, Weston, both of Conn., and Theodore N. Knerr, New York, N.Y., assignors to Otis Elevator Company, Farmington, Conn.
Filed Feb. 2, 1981, Ser. No. 230,843
Term of patent 14 years
Int. Cl. D10—*06*; D13—*03*
U.S. Cl. D13—35

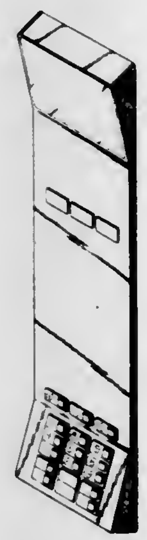

268,027
VIDEO TAPE RECORDER
Hiroshi Takashima; Seiji Usami; Wataru Iwahashi, and Hiroshi Ohi, all of Osaka, Japan, assignors to Sharp Corporation, Osaka, Japan
Filed Dec. 23, 1980, Ser. No. 219,591
Claims priority, application Japan, Jul. 18, 1980, 55-29372
Term of patent 14 years
Int. Cl. D14—*01*
U.S. Cl. D14—2

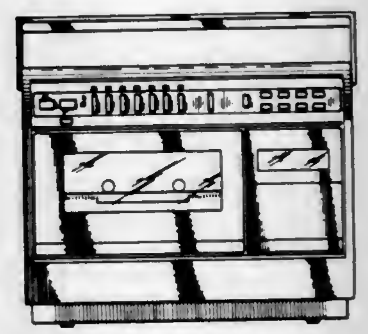

268,028
RECORD PLAYER
Kenji Ekuan, Tokyo, Japan, assignor to Nippon Gakki Seizo Kabushiki Kaisha, Japan
Continuation of Ser. No. 71,187, Aug. 31, 1979. This application Feb. 4, 1980, Ser. No. 118,209
Claims priority, application Japan, Mar. 1, 1979, 54-7889
Term of patent 14 years
Int. Cl. D14—*01*
U.S. Cl. D14—14

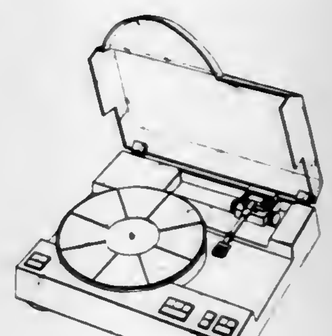

268,029
DATA COLLECTION TERMINAL FOR AUTHORIZATION CONTROL SYSTEM OR THE LIKE
Charles R. Fisher, 34781 Glen Dr., Eastlake, Ohio 44094
Filed Apr. 21, 1980, Ser. No. 142,056
Term of patent 14 years
Int. Cl. D14—*02*
U.S. Cl. D14—107

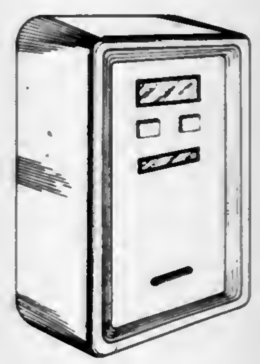

268,030
FRONT PANEL FOR A KEYBOARD AND DISPLAY UNIT
Charles M. Ault, Winchester, Mass., assignor to Termiflex Corporation, Nashua, N.H.
Filed Sep. 5, 1980, Ser. No. 184,348
Term of patent 14 years
Int. Cl. D14—*02*; D18—*01*
U.S. Cl. D14—115

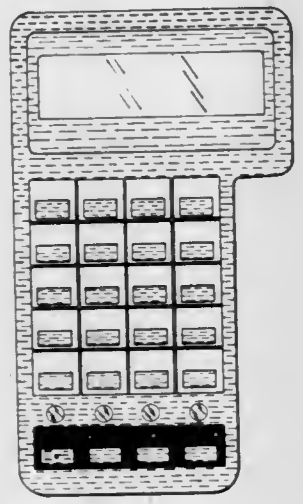

268,031
PORTABLE ELECTRIC SEWING MACHINE
Carlo Zappa, Milan, Italy, assignor to EL CU S.p.A., Milan, Italy
Filed May 14, 1980, Ser. No. 149,835
Claims priority, application Italy, Nov. 29, 1979, 23296/79[U]
Term of patent 14 years
Int. Cl. D15—*06*
U.S. Cl. D15—69

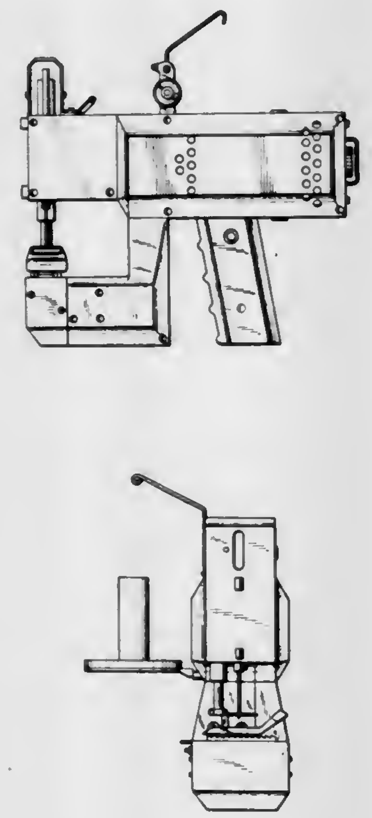

268,032
REFRIGERATOR WITH EYE LEVEL CONTROLS
Richard C. Matz; Donald F. Kaminski, both of Sidney, and Raymond H. DeLoye, Houston, all of Ohio, assignors to The Stolle Corporation, Sidney, Ohio
Filed Oct. 6, 1980, Ser. No. 194,607
Term of patent 14 years
Int. Cl. D15—*07*
U.S. Cl. D15—85

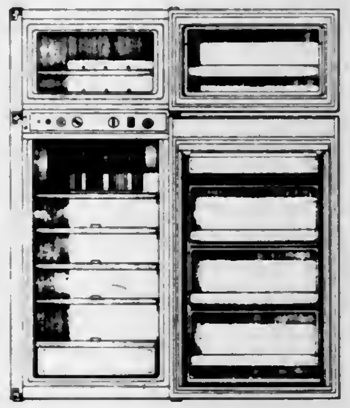

268,033
ROBOT ARM
Theodore H. Stackhouse, Cincinnati, Ohio, assignor to Cincinnati Milacron Inc., Cincinnati, Ohio
Filed Dec. 22, 1980, Ser. No. 218,505
Term of patent 14 years
Int. Cl. D15—*99*
U.S. Cl. D15—199

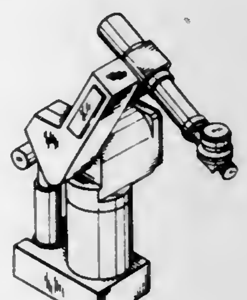

268,034
RIBBON CARTRIDGE
Mary Van Voy, Canoga Park, Calif., assignor to General Ribbon Corporation, Canoga Park, Calif.
Filed Oct. 6, 1980, Ser. No. 194,062
Term of patent 14 years
Int. Cl. D18—*01*
U.S. Cl. D18—12

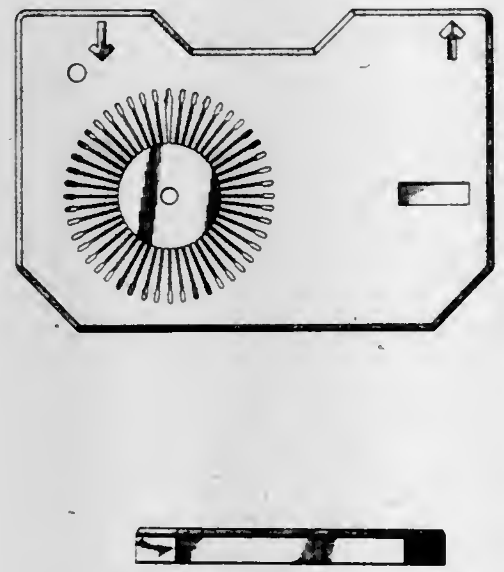

268,035
PRINT FONT
Bruce N. Blackburn, Pelham, N.Y., assignor to Champion International Corporation, Stamford, Conn.
Filed Jan. 22, 1981, Ser. No. 227,207
Term of patent 14 years
Int. Cl. D18—*03*
U.S. Cl. D18—24

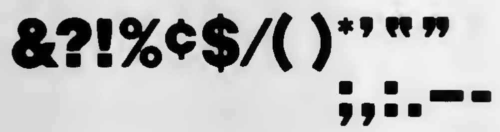

268,036
DART
Bernard J. Cagan, and Kenneth L. McQuary, both of Torrance, Calif., assignors to Placo Products Company, Torrance, Calif.
Filed Feb. 10, 1981, Ser. No. 233,083
Term of patent 14 years
Int. Cl. D21—*01*
U.S. Cl. D21—49

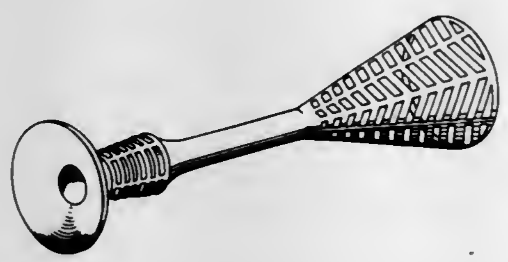

268,037
TOY MOLD OR THE LIKE
David Wiseltier, and Anthony J. Porcelli, both of New York, N.Y., assignors to Martin G. Raskin, New York, N.Y., a part interest
Filed Jan. 7, 1981, Ser. No. 223,135
Term of patent 14 years
Int. Cl. D21—*01*
U.S. Cl. D21—59

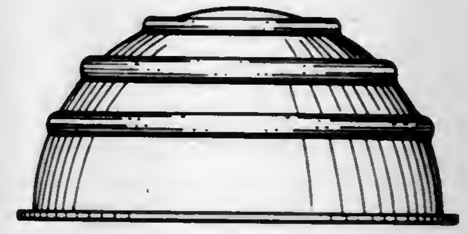

268,038
TOY XYLOPHONE
Mel Appel, Nine Nottingham Rd., Livingston, N.J. 07039, and George Kress, Scotch Plains, N.J., assignors to Mel Appel, Livingston, N.J.
Filed Feb. 17, 1981, Ser. No. 235,149
Term of patent 14 years
Int. Cl. D21—*01*
U.S. Cl. D21—64

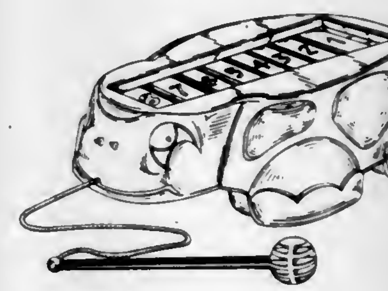

268,039
AERIAL TOY
Richard C. Osborne, 3007 Solimar Beach Dr., Ventura, Calif. 93001
Filed Jan. 15, 1981, Ser. No. 225,379
Term of patent 14 years
Int. Cl. D21—*01*
U.S. Cl. D21—86

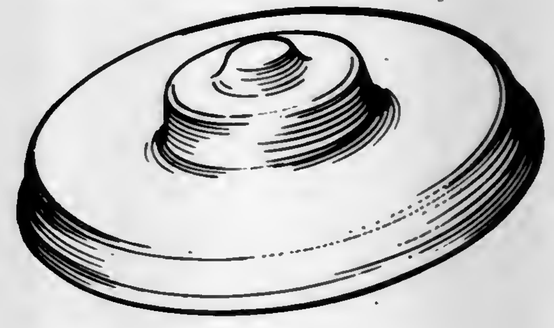

268,040
TOY VANITY CASE
Cheuk S. Ng, Hong Kong, Hong Kong, assignor to Blue Box Toy Factory, Limited, Hong Kong, Hong Kong
Filed Jan. 30, 1981, Ser. No. 230,349
Term of patent 14 years
Int. Cl. D21—*01*
U.S. Cl. D21—109

268,041
TOY HOUSE
Cheuk S. Ng, Hong Kong, Hong Kong, assignor to Tai Sang Industrial Co., Ltd., Hong Kong, Hong Kong
Filed Feb. 27, 1981, Ser. No. 239,035
Term of patent 14 years
Int. Cl. D21—*01*
U.S. Cl. D21—114

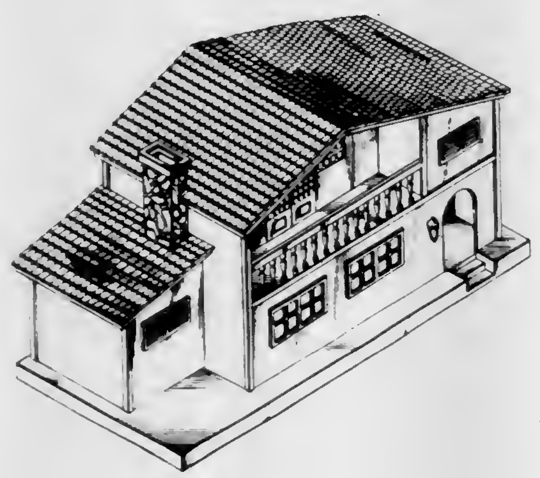

268,042
TOY CHAIN SAW
Mel Appel, Nine Nottingham Rd., Livingston, N.J. 07039, and George Kress, Scotch Plains, N.J., assignors to Mel Appel, Livingston, N.J.
Filed Feb. 17, 1981, Ser. No. 235,016
Term of patent 14 years
Int. Cl. D21—*01*
U.S. Cl. D21—120

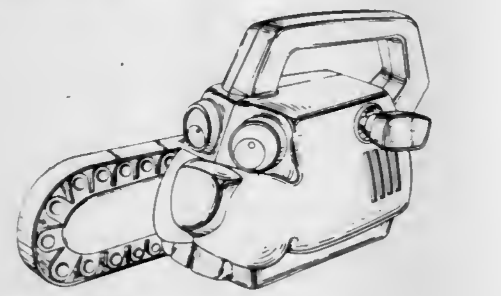

268,043
TOY EXTRUDER
Henry Orenstein, 136 Lakeside Ave., Verona, N.J. 07044
Filed Jun. 13, 1980, Ser. No. 159,052
Term of patent 3½ years
Int. Cl. D21—*01*
U.S. Cl. D21—124

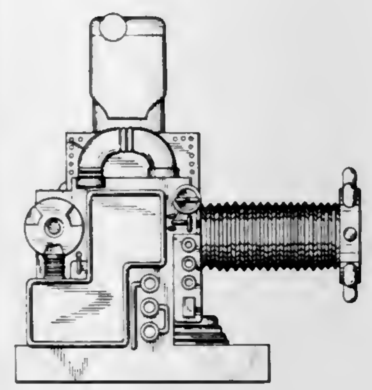

268,044
TOY PRINTING MEMBER
Gary R. Lemmeyer, East Aurora, N.Y., assignor to The Quaker Oats Company, Chicago, Ill.
Filed Jan. 12, 1981, Ser. No. 224,271
Term of patent 14 years
Int. Cl. D21—*01*
U.S. Cl. D21—127

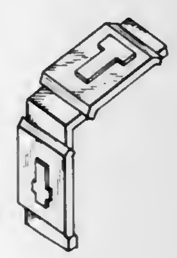

268,045
TOY PRINT HOLDER
Gary R. Lemmeyer, East Aurora, N.Y., assignor to The Quaker Oats Company, Chicago, Ill.
Filed Jan. 12, 1981, Ser. No. 224,293
Term of patent 14 years
Int. Cl. D21—*01*
U.S. Cl. D21—127

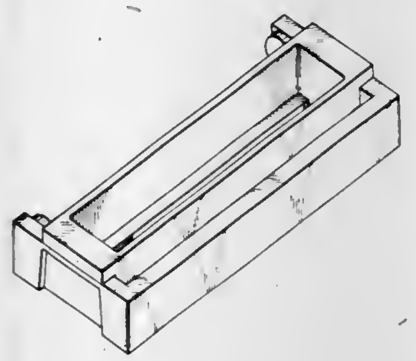

268,046
ROTATIONAL EXERCISER
Donald L. Bell, West Fork, Ark., assignor to Human Performance Systems, Inc., Fayetteville, Ark.
Filed Nov. 21, 1980, Ser. No. 208,922
Term of patent 14 years
Int. Cl. D21—*02*
U.S. Cl. D21—198

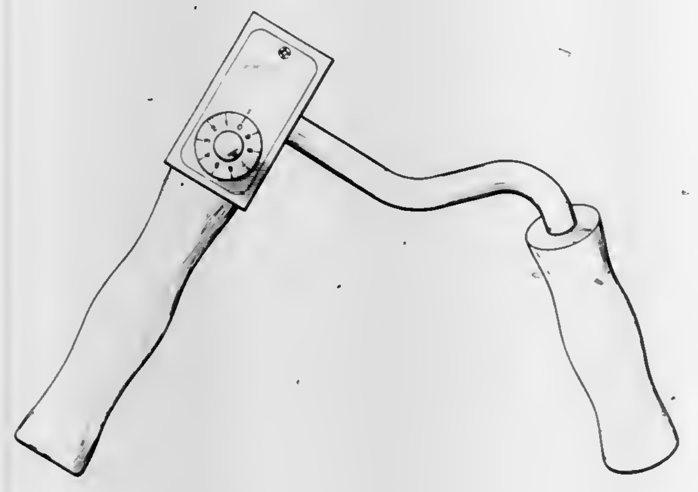

268,047
DUCK DECOY WITH STABILIZING SPONSONS AND KEEL
Chris Fulster, 2810 3rd Ave., Sacramento, Calif. 95818
Filed May 21, 1982, Ser. No. 380,507
Term of patent 14 years
Int. Cl. D22—*05*
U.S. Cl. D22—21

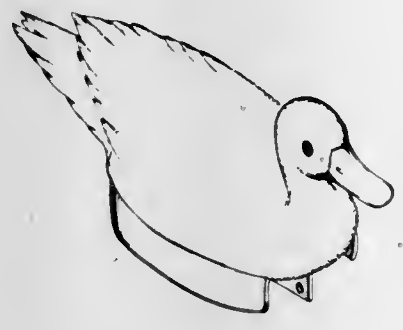

268,048
DIAPHRAGM VALVE
Tomoyuki Ueda, Nobeoka, Japan, assignor to Asahi Yukizai Kogyo Kabushiki Kaisha, Nobeoka, Japan
Filed Apr. 2, 1980, Ser. No. 136,711
Claims priority, application Japan, Oct. 31, 1979, 54-45550; Oct. 31, 1979, 54-45551; Oct. 31, 1979, 54-45552
Term of patent 14 years
Int. Cl. D23—*01*
U.S. Cl. D23—19

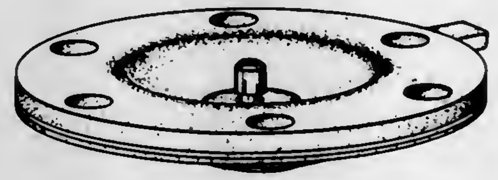

268,049
DIAPHRAGM VALVE
Tomoyuki Ueda, Nobeoka, Japan, assignor to Asahi Yukizai Kogyo Kabushiki Kaisha, Nobeoka, Japan
Filed Apr. 2, 1980, Ser. No. 136,712
Claims priority, application Japan, Oct. 31, 1979, 54-45549
Term of patent 14 years
Int. Cl. D23—*01*
U.S. Cl. D23—19

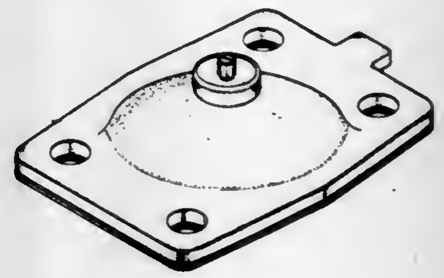

268,050
FORCED AIR WASTE OIL INCINERATOR
Robert V. Albertson, 2100 Shadywood Rd., Wayzata, Minn. 55391
Filed Oct. 14, 1980, Ser. No. 196,939
Term of patent 14 years
Int. Cl.[3] D23—*03*
U.S. Cl. D23—92

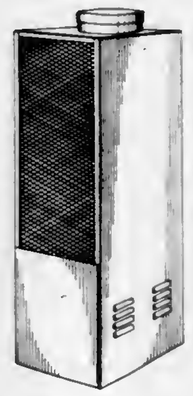

268,051
STOVE
Winston J. F. Sorensen, Lonkildevej 5, Lindelse, DK-5900 Rudkobing, Denmark
Filed Nov. 19, 1980, Ser. No. 208,292
Claims priority, application Denmark, May 23, 1980, 407/80
Term of patent 14 years
Int. Cl. D23—*03*
U.S. Cl. D23—97

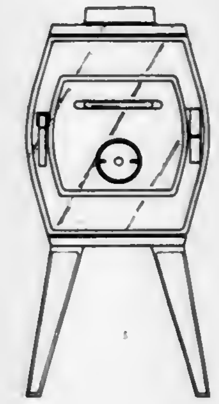

268,052
SHOWER HEAD
Richard P. Eadie, Westport, Conn., assignor to Vanderburgh Enterprises, Southport, Conn.
Filed Oct. 26, 1981, Ser. No. 314,581
Term of patent 14 years
Int. Cl. D23—*01*
U.S. Cl. D23—35

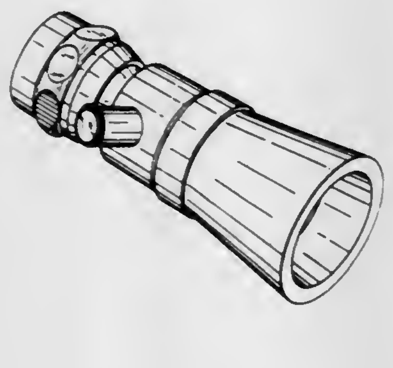

268,053
HEAT DISTRIBUTOR
Joseph A. Kozlowski, 168 Taft La., Windsor Locks, Conn. 06096
Filed Jul. 7, 1980, Ser. No. 166,196
Term of patent 14 years
Int. Cl. D23—*04*
U.S. Cl. D23—151

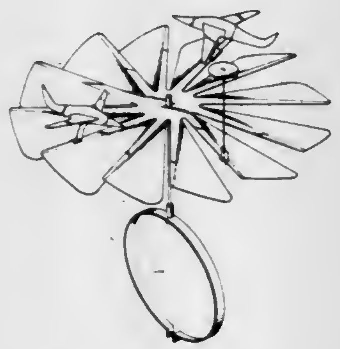

268,054
SOLARIUM WITH CONNECTING DRESSING ROOM AND TANNING ROOM
Eugene G. Charette, 112 B Collins St., Danvers, Mass. 01923
Filed Jul. 10, 1980, Ser. No. 168,263
Term of patent 14 years
Int. Cl.[3] D24—*01*
U.S. Cl. D24—39

268,055
PORTABLE LAMP
Arthur H. Moore, Fairfield, Conn., assignor to The Bridgeport Metal Goods Manufacturing Company, Bridgeport, Conn.
Filed Oct. 3, 1980, Ser. No. 193,616
Term of patent 14 years
Int. Cl. D26—*05*
U.S. Cl. D26—112

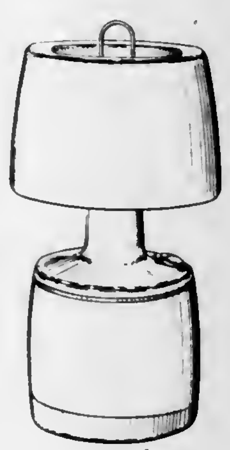

268,056
FEED SUPPLEMENT DISPENSER FOR PIGLETS
Adrian R. Campbell-Kelly, Landingsveien 116, Oslo 7; Hanne Fjelstad, Stockhulmsgata 35, Oslo 5; Lasse Gravås, Von Otkens vei 28, 1430 AS; Erik Reinemo, Robert Millars vei 7, Oslo 11, and Johan Sekkenes, Peter Møllers vei 1, Olso 5, all of Norway
Filed Apr. 8, 1980, Ser. No. 138,447
Claims priority, application Norway, Oct. 8, 1979, 7960513
Term of patent 14 years
Int. Cl. D30—*03*
U.S. Cl. D30—15

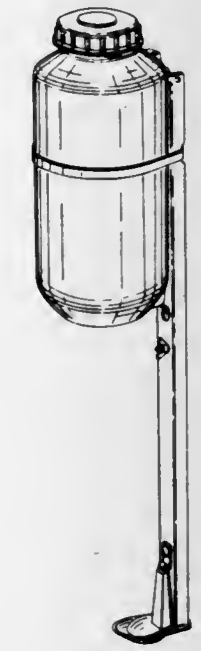

268,057
HAND SUCTION CLEANER
Nora R. Harmon, Cleveland, Ohio, assignor to Health-Mor Inc., Chicago, Ill.
Filed Dec. 17, 1980, Ser. No. 217,137
Term of patent 14 years
Int. Cl. D15—*05*
U.S. Cl. D32—18

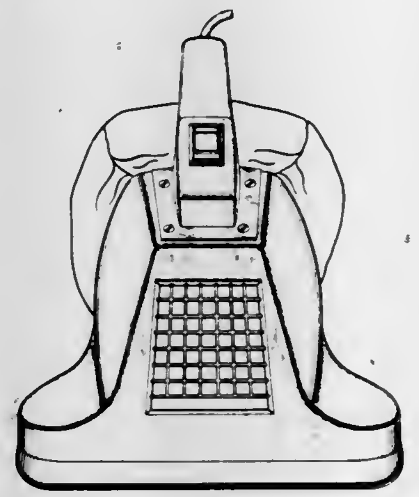

268,058
LITTER CONTAINER
Joseph E. Kinnebrew, IV, 13300 Beckwith Dr., NE., Lowell, Mich. 49331
Filed Mar. 27, 1979, Ser. No. 24,479
Term of patent 14 years
Int. Cl. D7—*05*
U.S. Cl. D34—01

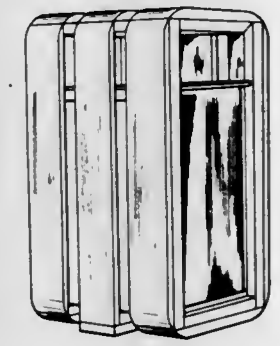

268,059
TRASH CONTAINER
Donald R. Kracke, 704 Silver Spur Rd., Rolling Hills Estates, Calif. 90274
Filed Sep. 2, 1980, Ser. No. 182,931
Term of patent 14 years
Int. Cl. D7—*05*
U.S. Cl. D34—4

268,060
HOISTING BRACKET FOR AN EXCHANGE PLATFORM FRAME OR THE LIKE
Leo Sutela, Turku, Finland, assignor to Oy Partek Ab, Finland
Filed Aug. 15, 1980, Ser. No. 178,367
Claims priority, application Finland, Apr. 11, 1980, 80289
Term of patent 14 years
Int. Cl. D12—*05*
U.S. Cl. D34—35

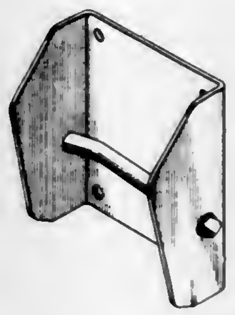

268,061
TOTE TRAY
Emil L. Munch, and John D. Von Benken, both of Cincinnati, Ohio, assignors to Nestier Corporation, Cincinnati, Ohio
Filed Jun. 19, 1979, Ser. No. 50,062
Term of patent 14 years
Int. Cl. D9—*03*
U.S. Cl. D34—40

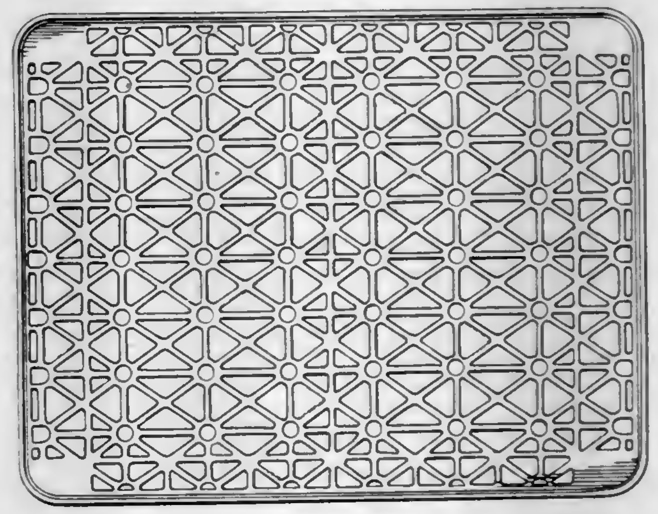

268,062
BANKING MACHINE TERMINAL
Gary S. Chance, Garland, Tex., assignor to Docutel Corporation, Irving, Tex.
Filed Oct. 28, 1980, Ser. No. 202,017
Term of patent 14 years
Int. Cl. D14—*02*
U.S. Cl. D99—28

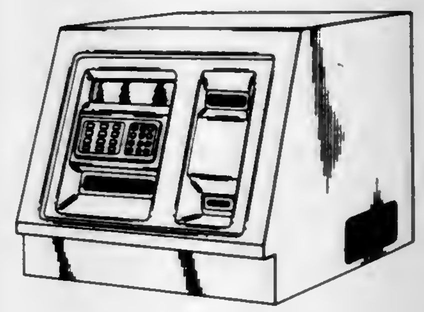

268,063
FIRE RESISTANT CONTAINER
David O. Chase, Skaneateles, N.Y., assignor to John D. Brush & Company, Inc., Rochester, N.Y.
Filed Oct. 31, 1980, Ser. No. 202,863
Term of patent 14 years
Int. Cl. D6—*04*
U.S. Cl. D99—28

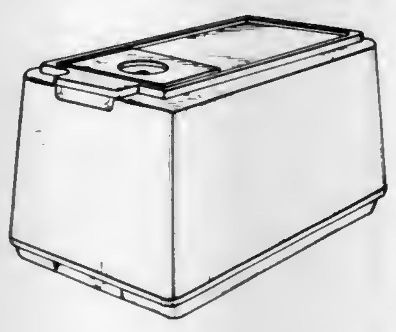

LIST OF PATENTEES

TO WHOM

PATENTS WERE ISSUED ON THE 22ND DAY OF FEBRUARY, 1983

NOTE.—Arranged in accordance with the first significant character or word of the name (in accordance with city and telephone directory practice).

AB Celleco: *See—*
Frykhult, Rune H., 4,374,729, Cl. 210-232.000.
Abe, Mitsunobu; Yoshida, Ikushi; Matsuo, Munetsugu; and Hayakawa, Hiroshi, to Nippon Steel Corporation. Process for producing deep-drawing cold rolled steel strips by short-time continuous annealing. 4,374,682, Cl. 148-12.00C.
Abex Corporation: *See—*
Wilcox, Jack W., 4,374,632, Cl. 418-267.000.
Abodishish, Hani A.; and Ritchey, Robert W., to Wyoming Mineral Corporation. Raffinate wash of second cycle solvent in the recovery of uranium from phosphate rock. 4,374,806, Cl. 423-10.000.
Adachi, Hidenari: *See—*
Sindo, Tiuzi; Obara, Tadashi; and Adachi, Hidenari, 4,374,827, Cl. 424-92.000.
Adachi, Tomohiro: *See—*
Ikeda, Eiji; Adachi, Tomohiro; Ito, Yoshihiro; Yamada, Ryozo; Taga, Akio; and Takashima, Shigeo, 4,374,695, Cl. 156-293.000.
Adams, Richard C.; and Waisala, Steven J., to Standard Oil Company, The. High nitrile copolymer latex coating. 4,374,948, Cl. 524-516.000.
Adicoff, Arnold: *See—*
Henry, Ronald A.; and Adicoff, Arnold, 4,374,777, Cl. 260-414.000.
Advanced Technology, Inc.: *See—*
Intrater, Josef; and Bertoldo, Gene, 4,374,903, Cl. 428-627.000.
Agrico Chemical Company: *See—*
O'Neill, Padraic S., 4,374,810, Cl. 423-160.000.
Ahl, Bernhard. Device for lifting sliding molds along steel bars for the construction of concrete buildings and the like. 4,374,634, Cl. 425-65.000.
Ahlquist, C. Norman; Hu, Yaw Wen; Schoen, Peter F.; and Poenisch, Paul A., to Intel Corporation. High contrast alignment marker for integrated circuit fabrication. 4,374,915, Cl. 430-22.000.
Ahrendsen, Kjeld: *See—*
Zacho, Per G.; and Ahrendsen, Kjeld, 4,375,029, Cl. 219-493.000.
Aica Kogyo Co., Ltd.: *See—*
Ikeda, Eiji; Adachi, Tomohiro; Ito, Yoshihiro; Yamada, Ryozo; Taga, Akio; and Takashima, Shigeo, 4,374,695, Cl. 156-293.000.
Air Products and Chemicals, Inc.: *See—*
Peterson, John O. H.; and Fales, Howard S., 4,375,002, Cl. 564-445.000.
Aizawa, Kimio; and Nagata, Takashi, to Matsushita Electric Industrial Co., Ltd. Terminal substrate for a quartz vibrating device. 4,375,041, Cl. 310-348.000.
Akagawa, Masaki: *See—*
Sugimoto, Osamu; Akagawa, Masaki; and Hayashi, Yukichi, 4,374,557, Cl. 194-100.00A.
Akagi, Akio: *See—*
Senda, Jihei; Inoue, Yoshihiro; Uenishi, Toshiaki; Harada, Hidefumi; Nakata, Kouji; Akagi, Akio; and Yamasaki, Takanori, 4,374,676, Cl. 106-303.000.
Senda, Jihei; Inoue, Yoshihiro; Uenishi, Toshiaki; Harada, Hidefumi; Nakata, Kouji; and Akagi, Akio, 4,374,677, Cl. 106-309.000.
Akahane, Shoji: *See—*
Tomioka, Kentaro; Hirota, Kazuo; Muramatsu, Hiroaki; and Akahane, Shoji, 4,374,936, Cl. 523-116.000.
Akashi, Toshihiro: *See—*
Shiratsuchi, Masami; Shimizu, Noboru; Shigyo, Hiromichi; Kyotani, Yoshinori; Kunieda, Hisashi; Kawamura, Kiyoshi; Sato, Seiichi; Akashi, Toshihiro; Nagakura, Masahiko; Sawada, Naotoshi; and Uchida, Yasumi, 4,374,840, Cl. 424-263.000.
Akkerman, Neil H.; and Christensen, Bruce D., to Baker CAC. Pilot with cantilevered spring. 4,374,487, Cl. 92-95.000.
Aktiebolaget Bofors: *See—*
Bratt, Sven-Erik, 4,374,605, Cl. 339-143.00R.
Akzona Incorporated: *See—*
Verhelst, Willem F.; and Wiersum, Ulfert E., 4,374,938, Cl. 523-124.000.
Albin, Michel, to Framatome. Method of handling fuel assemblies and rods when reloading a nuclear reactor. 4,374,801, Cl. 376-264.000.
Albright, Jay D.: *See—*
Dusza, John P.; and Albright, Jay D., 4,374,988, Cl. 544-281.000.
Aldrich, Paul H., to Hercules Incorporated. Stable dispersions of fortified rosin. 4,374,673, Cl. 106-212.000.
Alexander, Jeffrey C.: *See—*
Zahedi, Karim; and Alexander, Jeffrey C., 4,374,652, Cl. 55-6.000.
Alexander, Roy P., to Olin Corporation. Novel package for water sanitizing chemical and method for preparing it. 4,374,563, Cl. 206-499.000.
Allain, Ronald J.; and Smith, Gerald D., to Nalco Chemical Company. Method for the hydrogenation of nitriles to primary amines. 4,375,003, Cl. 564-492.000.
Allcock, Harry R.; and Harris, Paul J., to United States of America, Navy. Alkylated phosphazene oligomers and method of preparation. 4,374,781, Cl. 260-543.0PN.
Allen, Craig E.: *See—*
Canterino, Peter J.; and Allen, Craig E., 4,374,690, Cl. 156-229.000.
Allied Corporation: *See—*
Anello, Louis G.; Van Der Puy, Michael; Robinson, Martin A.; and Eibeck, Richard E., 4,374,782, Cl. 260-544.00F.
Prevorsek, Dusan C.; DeBona, Bruce T.; and Kesten, Yali, 4,374,973, Cl. 528-191.000.
Rothwell, Ronald E.; Rowan, Hugh H.; and Dunbar, James J., 4,374,960, Cl. 525-436.000.
Stephenson, Robert L.; and Pfeiffer, Robert C., 4,374,449, Cl. 24-230.0AL.
Allis-Chalmers Corporation: *See—*
Boone, Jerry C.; and Randall, Richard L., 4,374,628, Cl. 403-162.000.
Garside, Peter G., 4,374,650, Cl. 48-202.000.
Allison, Debra L.: *See—*
Doherty, James B.; and Allison, Debra L., 4,374,997, Cl. 548-539.000.
Aloia, Romeo R.: *See—*
Toothill, Richard B.; and Aloia, Romeo R., 4,374,947, Cl. 524-398.000.
Alonte, Antonio D.: *See—*
Protacio, Alfredo C.; Navarro, Ramon V.; Rio, Eliseo M., Jr.; Alonte, Antonio D.; and Pascual, Felix J., 4,374,507, Cl. 123-1.00A.
Alsthom-Atlantique: *See—*
Roger, Gillet, 4,375,043, Cl. 310-258.000.
Alsthom-Unelec: *See—*
Daussin, Bernard; and Hennemann, Jean, 4,375,022, Cl. 200-148.00R.
Altex Scientific, Inc.: *See—*
Berick, Alan C.; and Magnussen, Haakon T., Jr., 4,374,620, Cl. 356-246.000.
Aluminum Company of America: *See—*
Ray, Siba P., 4,374,761, Cl. 252-519.000.
American Cyanamid Company: *See—*
Dusza, John P.; and Albright, Jay D., 4,374,988, Cl. 544-281.000.
Joseph, Joseph P.; and Bernstein, Seymour, 4,374,831, Cl. 424-180.000.
Joseph, Joseph P.; and Bernstein, Seymour, 4,374,832, Cl. 424-180.000.
Robertson, Allan J., 4,374,780, Cl. 260-502.40R.
Singh, Balwant; and Novak, Robert W., 4,374,771, Cl. 260-239.30R.
Singh, Balwant; and Schaefer, Frederic C., 4,374,987, Cl. 544-260.000.
Toothill, Richard B.; and Aloia, Romeo R., 4,374,947, Cl. 524-398.000.
American District Telegraph Company: *See—*
Guscott, John K., 4,375,034, Cl. 250-342.000.
American Hoechst Corporation: *See—*
Walls, John E., 4,374,710, Cl. 204-33.000.
Wanat, Stanley F.; and Hsieh, Shane, 4,374,920, Cl. 430-331.000.
American Home Products Corporation: *See—*
McGregor, William H., 4,374,765, Cl. 260-112.50R.
Stein, Reinhardt P., 4,374,779, Cl. 260-465.00E.
American Hospital Supply Corporation: *See—*
Grossmann, Frederic; and Sims, Larry A., 4,374,520, Cl. 128-132.00D.
American Standard Inc.: *See—*
Carucci, Alberto; and Moore, Bernard C., 4,374,635, Cl. 425-441.000.
AMP Incorporated: *See—*
Bright, Edward J.; Cherry, Hitesh; Dehoff, Robert E.; Fedder, James L.; and Williams, Tom R., 4,374,607, Cl. 339-253.00R.
Crowley Daniel J.; and Stine, Jon D., 4,375,071, Cl. 360-104.000.
Kanoff, George, 4,374,483, Cl. 89-1.00B.
Lathrop, John C., 4,374,606, Cl. 339-177.00R.
Anderson, Gene S., to Belden Corporation. Fiber optic cable. 4,374,608, Cl. 350-96.230.
Anderson, Paul S.; Christy, Marcia E.; Evans, Ben E.; and Remy, David C., to Merck & Co., Inc. Dibenzo[a,d]cycloocten-5,12-(and 6,12)-imines. 4,374,838, Cl. 424-256.000.
Anderson, Tore N., to Microdyne Corporation. Polarization rotatable antenna feed. 4,375,052, Cl. 333-21.00A.
Anello, Louis G.; Van Der Puy, Michael; Robinson, Martin A.; and Eibeck, Richard E., to Allied Corporation. Synthesis of trifluoroacetyl fluoride. 4,374,782, Cl. 260-544.00F.

Anfimov, Alexandr F.: *See—*
Azbukin, Vladimir G.; Balandin, Jury F.; Gorynin, Igor V.; Gluskin, Lev Y.; Zvezdin, Jury I.; Ignatenko, Alexandr G.; Krasnov, Alexandr N.; Melekhov, Rostislav K.; Osipova, Inna S.; Pavlov, Valery N.; Khokhlov, Alexandr A.; Stepanov, Ivan A.; Anfimov, Alexandr F.; Ardentov, Vasily V.; Burmakin, Viktor M.; Ignatov, Viktor A.; Rokhlin, Eduard A.; and Zhitkov, Vladimir V., 4,374,680, Cl. 148-2.000.
Antlfinger, George J., to B F Goodrich Company, The. Polyolefin nonwovens with high wet strength retention bonded with vinyl chloride copolymers. 4,374,894, Cl. 428-288.000.
Antol, Ronald F.: *See—*
Wojcik, Thaddeus A.; Kobuck, Richard M.; and Antol, Ronald F., 4,374,462, Cl. 51-411.000.
Aoi Chemical Inc.: *See—*
Takemura, Yoshifumi; and Miyazaki, Hirokazu, 4,374,946, Cl. 524-271.000.
Arai, Mamoru; Haneishi, Tatsuo; and Nakajima, Mutsuo, to Sankyo Company, Limited. Macrolide antibiotic. 4,374,764, Cl. 260-112.50R.
Arai, Nobushige, to Sharp Kabushiki Kaisha. Self-cleaning coating compositions and cooking apparatus coated therewith. 4,374,754, Cl. 252-430.000.
Arai, Yoshihiro: *See—*
Kudo, Kazushige; Arai, Yoshihiro; Tsurutani, Ryoichi; and Kiriyama, Shun-ichi, 4,374,961, Cl. 525-439.000.
Ardentov, Vasily V.: *See—*
Azbukin, Vladimir G.; Balandin, Jury F.; Gorynin, Igor V.; Gluskin, Lev Y.; Zvezdin, Jury I.; Ignatenko, Alexandr G.; Krasnov, Alexandr N.; Melekhov, Rostislav K.; Osipova, Inna S.; Pavlov, Valery N.; Khokhlov, Alexandr A.; Stepanov, Ivan A.; Anfimov, Alexandr F.; Ardentov, Vasily V.; Burmakin, Viktor M.; Ignatov, Viktor A.; Rokhlin, Eduard A.; and Zhitkov, Vladimir V., 4,374,680, Cl. 148-2.000.
Arens, Robert P., to Minnesota Mining and Manufacturing Company. Oil-repellent microvoid-imaging material. 4,374,889, Cl. 428-207.000.
Argento, Benny J.; Walker, Wellington E., deceased (by Walker, Maxine M., executrix); and Fiato, Rocco A., to Union Carbide Corporation. Catalyst and process for the conversion of methanol to acetaldehyde. 4,374,752, Cl. 252-429.00R.
Armstrong, Douglas, to Coulter Electronics, Inc. Blood cell volume monitoring. 4,374,644, Cl. 436-63.000.
Armstrong, William W., to Pfizer Inc. Sulfonamide compositions. 4,374,826, Cl. 424-80.000.
Arndt, Gerhard: *See—*
Gerke, Peter; Arndt, Gerhard; Roescheisen, Friedrich; and Bruentrup, Heinrich, 4,375,098, Cl. 370-110.100.
Arneth, August P.; and Foshee, Curtis L., to International Business Machines Corp. Method and apparatus of signalling request to send clear to send delay. 4,375,103, Cl. 375-109.000.
Arsac, Andre; Ducarre, Michel; Grosbois, Jean; and Nener, Thomas, to Rhone-Poulenc-Textile. Textiles with improved conducting properties and processes for their manufacture. 4,374,893, Cl. 428-263.000.
Arzoumanidis, Gregory G.; and Darragh, Kirk V., to Stauffer Chemical Company. Process for producing hypo-phosphorous acid (H_3PO_2) and non-transition metal hypophosphites. 4,374,816, Cl. 423-304.000.
Asahi Kasei Kogyo Kabushiki Kaisha: *See—*
Fujiwara, Takashi; Kajita, Shuji; Matsushita, Tetsuo; and Manabe, Seiichi, 4,374,977, Cl. 528-348.000.
Fujiwara, Takashi; Kajita, Shuji; Matsushita, Tetsuo; and Manabe, Seiichi, 4,374,978, Cl. 528-348.000.
Ogawa, Shinsaku, 4,374,711, Cl. 204-98.000.
Asahi Kogaku Kogyo Kabushiki Kaisha: *See—*
Kobayashi, Takumi, 4,374,614, Cl. 354-216.000.
ASEA Aktiebolag: *See—*
Magnusson, Harry; Tallback, Gote; and Wennberg, Ake, 4,375,076, Cl. 363-68.000.
Ashburn, Donald G.; and Steady, Glendon T., to United States Steel Corporation. ABS Composition containing coal tar pitch. 4,374,944, Cl. 524-66.000.
Ashby, Bruce A.; and Schroeter, Siegfried H., to General Electric Co. Ultraviolet light absorbing agents and compositions and articles containing same. 4,374,674, Cl. 106-287.120.
Ashour, Tahsin A.: *See—*
Veillette, Norman T.; Pian, Charles H. C.; and Ashour, Tahsin A., 4,374,918, Cl. 430-115.000.
Asoshina, Eishi: *See—*
Shimizu, Masato; Asoshina, Eishi; Tominaga, Takashi; and Muguruma, Tadahiro, 4,374,890, Cl. 428-212.000.
Atsukawa, Masumi; Shinoda, Naoharu; Tatani, Atsushi; and Shimizu, Taku, to Mitsubishi Jukogyo Kabushiki Kaisha. Process for stack gas treatment. 4,374,812, Cl. 423-242.000.
Austin, Lowell W.: *See—*
Smith, John R.; Bingle, William D.; and Austin, Lowell W., 4,374,902, Cl. 428-621.000.
Automated Industrial Systems, Inc.: *See—*
Carlson, William J., 4,375,025, Cl. 219-121.0LH.
Azbukin, Vladimir G.; Balandin, Jury F.; Gorynin, Igor V.; Gluskin, Lev Y.; Zvezdin, Jury I.; Ignatenko, Alexandr G.; Krasnov, Alexandr N.; Melekhov, Rostislav K.; Osipova, Inna S.; Pavlov, Valery N.; Khokhlov, Alexandr A.; Stepanov, Ivan A.; Anfimov, Alexandr F.; Ardentov, Vasily V.; Burmakin, Viktor M.; Ignatov, Viktor A.; Rokhlin, Eduard A.; and Zhitkov, Vladimir V. Corrosion-resistant weldable martensitic stainless steel, process for the manufacture thereof and articles. 4,374,680, Cl. 148-2.000.
B F Goodrich Company, The: *See—*
Antlfinger, George J., 4,374,894, Cl. 428-288.000.
Baba, Kazuo, to Olympus Optical Co., Ltd. Ultrasonic diagnostic apparatus for endoscope. 4,374,525, Cl. 128-660.000.
Badertscher, Ernest: *See—*
Gasser, Rupert J.; and Badertscher, Ernest, 4,374,860, Cl. 426-28.000.
Badische Corporation: *See—*
Burlone, Dominick A., 4,374,641, Cl. 8-557.000.
Badmin, John S.; and Mears, Barry J., to Shell Oil Company. Pyrethroid pesticidal composition. 4,374,833, Cl. 424-225.000.
Baglio, Joseph A.: *See—*
Palilla, Frank C.; Gaudet, Gary G.; and Baglio, Joseph A., 4,374,819, Cl. 423-570.000.
Baker CAC: *See—*
Akkerman, Neil H.; and Christensen, Bruce D., 4,374,487, Cl. 92-95.000.
Baker, Kenneth D.: *See—*
El-Shazly, Mohamed F.; Baker, Kenneth D.; and Rymwid, Yvonne, 4,374,876, Cl. 427-443.100.
Baker Perkins Holdings Ltd.: *See—*
Morton, David C., 4,374,559, Cl. 198-429.000.
Bakewell, Frank W.; and Stricker, Charles D., to United States Steel Corporation. System for electrolytic cleaning of metal wire in loop form. 4,374,719, Cl. 204-202.000.
Balandin, Jury F.: *See—*
Azbukin, Vladimir G.; Balandin, Jury F.; Gorynin, Igor V.; Gluskin, Lev Y.; Zvezdin, Jury I.; Ignatenko, Alexandr G.; Krasnov, Alexandr N.; Melekhov, Rostislav K.; Osipova, Inna S.; Pavlov, Valery N.; Khokhlov, Alexandr A.; Stepanov, Ivan A.; Anfimov, Alexandr F.; Ardentov, Vasily V.; Burmakin, Viktor M.; Ignatov, Viktor A.; Rokhlin, Eduard A.; and Zhitkov, Vladimir V., 4,374,680, Cl. 148-2.000.
Balimann, Walter: *See—*
Hufnagel, Willi; Blanc, Maurice; and Balimann, Walter, 4,374,864, Cl. 426-594.000.
Banks, Eddie D., to Boeing Company, The. Aerial cargo delivery system. 4,374,578, Cl. 244-137.00R.
Barnabeo, Austin E., to Union Carbide Corporation. Crosslinkable compositions based on alkylene-alkyl acrylate copolymers containing a polyol, an organo titanate and a molecular sieve. 4,374,958, Cl. 525-384.000.
Barnes, Dale R., to Fayette Manufacturing Corporation. Windmill speed limiting system utilizing hysteresis. 4,374,631, Cl. 416-23.000.
Barnes-Hind Pharmaceuticals, Inc.: *See—*
Sibley, Murray J.; and Nite, Rebecca F., 4,374,745, Cl. 252-106.000.
Barrington, Burchus Q., to Halliburton Company. Sleeve valve. 4,374,583, Cl. 251-324.000.
Barry, Patrick D.; Lowrey, Robert E.; and Dobbs, Kenneth. Recording and evaluating instrument and method for teacher evaluation. 4,375,080, Cl. 364-551.000.
Bartow, Richard J., to Clark Equipment Company. Upright for lift truck. 4,374,550, Cl. 187-9.00E.
BASF Aktiengesellschaft: *See—*
Braha, Alexandru; Daucher, Hans; Hess, Klaus; Kroetzsch, Peter; Merkel, Helmut; Roedl, Roland; Schwaegerl, Walter; and Stickel, Richard, 4,374,730, Cl. 210-608.000.
Decker, Walter; Schoen, Ernst; Grabhoefer, Herbert; and Weyland, Peter, 4,374,935, Cl. 521-173.000.
Eckert, Guenter; Wuertele, Lothar; Petersen, Harro; Goeckel, Ulrich; and Fischer, Kurt, 4,374,872, Cl. 427-338.000.
Merger, Franz; Towae, Friedrich; and Harder, Wolfgang, 4,375,000, Cl. 560-25.000.
Battelle Development Corporation: *See—*
Zega, Bogdan, 4,374,722, Cl. 204-298.000.
Baucom, Keith B.; and Hamon, Burrell N., to United States of America, Air Force. Method for the preparation of poly (carbonoyl fluoride) oligomers. 4,374,715, Cl. 204-158.00R.
Baumann, Heinz, to Siemens Aktiengesellschaft. X-Ray diagnostic generator. 4,375,105, Cl. 378-092.000.
Baumgarten, Arthur A.: *See—*
Glogolja, Miroslav; and Baumgarten, Arthur A., 4,375,073, Cl. 361-91.000.
Baxter, Ronald D.; and Freud, Paul J., to Leeds & Northrup Company. Thin film resistance thermometer device with a predetermined temperature coefficent of resistance and its method of manufacture. 4,375,056, Cl. 338-25.000.
Baxter Travenol Laboratories, Inc.: *See—*
Brown, Richard I.; and Bilstad, Arnold C., 4,374,731, Cl. 210-637.000.
Bayer Aktiengesellschaft: *See—*
Brandt, Horst; Hornle, Reinhold; Buchele, Richard; and Wiegner, Dieter, 4,374,642, Cl. 8-639.000.
Schmidt, Manfred; Freitag, Dieter; and Bottenbruch, Ludwig, 4,374,971, Cl. 528-167.000.
Beck, Bernhard: *See—*
Fratzer, Gerhard; and Beck, Bernhard, 4,374,803, Cl. 422-176.000.
Becker, Sharon L. Energy saving window screen guide device. 4,374,536, Cl. 160-84.00R.
Beckman Instruments, Inc.: *See—*
Crosby, John B., 4,375,038, Cl. 307-492.000.
Bekker, Marthinus J.; and Hall, Douglas J. M., to DRW Corporation. Compensator for muzzle climb. 4,374,484, Cl. 89-14.00C.
Belden Corporation: *See—*
Anderson, Gene S., 4,374,608, Cl. 350-96.230.
Bell, Cecil R., Jr.; Nakhle, George D.; and Edwards, A. Russell, to Consolidated Foods Corporation. Garment toe closing assembly. 4,374,501, Cl. 112-121.150.

Bell Telephone Laboratories, Incorporated: *See—*
Bjorkholm, John E.; and White, Jonathan C., 4,375,033, Cl. 250-251.000.
Keilp, John P.; Moore, Warren F.; and Sirbu, Victor, 4,374,795, Cl. 264-152.000.
Maxemchuk, Nicholas F., 4,375,083, Cl. 364-900.000.
Nahory, Robert E.; and Tell, Benjamin, 4,374,867, Cl. 427-38.000.
Bendix Corporation, The: *See—*
Colpaert, James J., 4,374,554, Cl. 188-106.00A.
Hemmer, Valentine J.; Piscitelli, R. Amelia; Fischer, Charles P.; and Washburn, James C., 4,374,604, Cl. 339-59.00R.
Warren, Gilbert G.; and Johnson, Colin A., 4,374,450, Cl. 445-7.000.
Bengtsson, Erik A.: *See—*
Collin, Per H.; and Bengtsson, Erik A., 4,374,663, Cl. 75-26.000.
Benninger, Gary N.: *See—*
Peck, Raymond E.; Petresh, Randall P.; and Benninger, Gary N., 4,374,553, Cl. 188-73.450.
Beranger, Serge: *See—*
Favier, Colette; Pinhas, Henri; Beranger, Serge; and Pascal, Jean-Claude, 4,374,835, Cl. 424-250.000.
Favier, Colette; Pinhas, Henri; Beranger, Serge; and Pascal, Jean-Claude, 4,374,837, Cl. 424-253.000.
Berge, Charles T.; Mack, Mark P.; and Starks, Charles M., to Conoco Inc. Magnesium disiloxide compounds. 4,374,755, Cl. 252-431.00R.
Berick, Alan C.; and Magnussen, Haakon T., Jr., to Altex Scientific, Inc. Photometric flow cell. 4,374,620, Cl. 356-246.000.
Bernstein, Seymour: *See—*
Joseph, Joseph P.; and Bernstein, Seymour, 4,374,831, Cl. 424-180.000.
Joseph, Joseph P.; and Bernstein, Seymour, 4,374,832, Cl. 424-180.000.
Bertoldo, Gene: *See—*
Intrater, Josef; and Bertoldo, Gene, 4,374,903, Cl. 428-627.000.
Betz Laboratories, Inc.: *See—*
Snyder, William R.; and Feuerstein, Diane, 4,374,733, Cl. 210-701.000.
Bezman, Susan A., to Chevron Research Company. Oxygenated fuel dehydration. 4,374,647, Cl. 44-56.000.
Bhatia, Chandrakant: *See—*
Toman, George M.; Bock, Thomas J.; and Bhatia, Chandrakant, 4,374,502, Cl. 112-162.000.
Bhatia, Yog R., to Henkel Corporation, The. Anaerobic compositions. 4,374,940, Cl. 523-176.000.
Bilstad, Arnold C.: *See—*
Brown, Richard I.; and Bilstad, Arnold C., 4,374,731, Cl. 210-637.000.
Bingle, William D.: *See—*
Smith, John R.; Bingle, William D.; and Austin, Lowell W., 4,374,902, Cl. 428-621.000.
Birkenbach, Alfred; and Franke, Helmut, to ITT Industries, Inc. Mechanical actuating device for a spot-type disc brake. 4,374,551, Cl. 188-71.900.
Bjorkholm, John E.; and White, Jonathan C., to Bell Telephone Laboratories, Incorporated. Universal detector for atomic and molecular beams. 4,375,033, Cl. 250-251.000.
Black & Decker Inc.: *See—*
Sauerwein, William D., 4,375,040, Cl. 310-239.000.
Blahna, Nadezda; and Fischer, Bruno, to International Standard Electric Corporation. Method of manufacturing correction filter for exposing screens of color-picture tubes. 4,374,866, Cl. 427-10.000.
Blanc, Maurice: *See—*
Hufnagel, Willi; Blanc, Maurice; and Balimann, Walter, 4,374,864, Cl. 426-594.000.
Blenner, Donald R.; and Boenig, Herman V., to Lord Corporation. Method for bonding elastomers to metals. 4,374,694, Cl. 156-272.600.
Blesser, Barry, to Pencept, Inc. Multistage digital filtering utilizing several criteria. 4,375,081, Cl. 364-724.000.
Blitstein, John; and Kathrein, Donald, to T. C. Manufacturing Company, Inc. Corrosion-resistant coating composition containing hollow microballoons. 4,374,874, Cl. 427-379.000.
Blount, David H. Process for the production of polyamide silicate resinous products. 4,374,976, Cl. 528-339.500.
Board of Reagents, The University of Texas System: *See—*
Folkers, Karl; Kubiak, Teresa M.; Stepien, Henryk M.; and Sakura, Naoki, 4,374,828, Cl. 424-177.000.
Bock, Edward C.: *See—*
Spinelli, Richard A.; and Bock, Edward C., 4,374,619, Cl. 355-57.000.
Bock, Thomas J.: *See—*
Toman, George M.; Bock, Thomas J.; and Bhatia, Chandrakant, 4,374,502, Cl. 112-162.000.
Boden, Richard M., to International Flavors & Fragrances Inc. Aliphatic branched olefin dioxolanes. 4,374,998, Cl. 549-430.000.
Boden, Richard M., to International Flavors & Fragrances Inc. Branched chain olefinic alcohols, thiols, esters and ethers, organoleptic uses thereof, processes for preparing same and intermediates therefor. 4,375,005, Cl. 568-878.000.
Boeing Company, The: *See—*
Banks, Eddie D., 4,374,578, Cl. 244-137.00R.
Boenig, Herman V.: *See—*
Blenner, Donald R.; and Boenig, Herman V., 4,374,694, Cl. 156-272.600.
Boers, Paulus M.: *See—*
Bouma, Herman; Bouwhuis, Dominicus G.; Boers, Paulus M.; and Jacobs, Josephus C., 4,375,058, Cl. 340-146.30Z.
Boksay, Istvan: *See—*
Weber, Rolf-Ortwin; Soder, Alfons; and Boksay, Istvan, 4,374,990, Cl. 544-376.000.
Bolich, Raymond E., Jr.; Hartsough, Lloyd B.; and Cothran, Philip E., to Proctor & Gamble Company, The. Hair conditioning compositions. 4,374,825, Cl. 424-70.000.
Bolon, Donald A.; and Gorczyca, Thomas B., to General Electric Company. Coating solution of polyetherimide oligomers. 4,374,972, Cl. 528-185.000.
Book Covers, Inc.: *See—*
Carter, Leewood C.; Neary, Robin P.; and Curtis, Jay C., 4,374,441, Cl. 412-3.000.
Boone, Jerry C.; and Randall, Richard L., to Allis-Chalmers Corporation. Joint for securing a sickle drive pin. 4,374,628, Cl. 403-162.000.
Bornard, Guy: *See—*
Lebeau, Louis; and Bornard, Guy, 4,374,703, Cl. 162-253.000.
Bornslaeger, Stephan R., to Kimberly-Clark Corporation. Nonwoven laminate for recreation fabric. 4,374,888, Cl. 428-198.000.
Bottenbruch, Ludwig: *See—*
Schmidt, Manfred; Freitag, Dieter; and Bottenbruch, Ludwig, 4,374,971, Cl. 528-167.000.
Bottner, Harald: *See—*
Scholze, Horst; Schmidt, Helmut; and Bottner, Harald, 4,374,933, Cl. 521-64.000.
Bouma, Herman; Bouwhuis, Dominicus G.; Boers, Paulus M.; and Jacobs, Josephus C., to U.S. Philips Corporation. Device for reading a printed code and for converting this code into an audio signal. 4,375,058, Cl. 340-146.30Z.
Bouwhuis, Dominicus G.: *See—*
Bouma, Herman; Bouwhuis, Dominicus G.; Boers, Paulus M.; and Jacobs, Josephus C., 4,375,058, Cl. 340-146.30Z.
Boyer, Michael R. Ham slicing machine. 4,374,490, Cl. 99-538.000.
Brabbs, William J.: *See—*
Hong, Charles A.; and Brabbs, William J., 4,374,862, Cl. 426-94.000.
Bradley, Joel C. Undulating prismoid modules. 4,374,542, Cl. 165-166.000.
Braha, Alexandru; Daucher, Hans; Hess, Klaus; Kroetzsch, Peter; Merkel, Helmut; Roedl, Roland; Schwaegerl, Walter; and Stickel, Richard, to BASF Aktiengesellschaft. Process and apparatus for the biological purification of sewage. 4,374,730, Cl. 210-608.000.
Branca, Quirico; Fischli, Albert E.; and Szente, Andre, to Hoffmann-La Roche Inc. Triazolo-benzodiazepine derivatives. 4,374,773, Cl. 260-245.500.
Brandenstein, Manfred: *See—*
Olschewski, Armin; Brandenstein, Manfred; Walter, Lothar; and Ernst, Horst M., 4,374,556, Cl. 192-98.000.
Brandrup, Johannes: *See—*
Fischer, Edgar; Brandrup, Johannes; and Weinlich, Jurgen, 4,374,966, Cl. 526-62.000.
Brandt, Horst; Hornle, Reinhold; Buchele, Richard; and Wiegner, Dieter, to Bayer Aktiengesellschaft. Dyestuff mixtures, a process for their preparation and a process for dyeing hydrophobic fibres. 4,374,642, Cl. 8-639.000.
Bratt, Sven-Erik, to Aktiebolaget Bofors. An assembly of an electrical connector and pyrotechnic igniter. 4,374,605, Cl. 339-143.00R.
Braun Aktiengesellschaft: *See—*
Tittert, Curt, 4,374,528, Cl. 132-37.00R.
Breault, Richard D.; and Goller, Glen J., to United Technologies Corporation. Ribbed electrode substrates. 4,374,906, Cl. 429-44.000.
Bridgestone Tire Company Limited: *See—*
Yotsumoto, Toshihiro; and Koyama, Kazuo, 4,374,962, Cl. 525-442.000.
Brigham, William D.: *See—*
Zwick, Eugene B.; Nguyen, Dung D.; Brigham, William D.; and Hoffman, Kenneth, 4,374,637, Cl. 431-183.000.
Bright, Edward J.; Cherry, Hitesh; Dehoff, Robert E.; Fedder, James L.; and Williams, Tom R., to AMP Incorporated. Electrical pin and socket connector. 4,374,607, Cl. 339-253.00R.
Briley, Patrick B., to Hybrid Energy, Inc. Temperature conditioning system suitable for use with a solar energy collection and storage apparatus or a low temperature energy source. 4,374,467, Cl. 62-238.100.
Bristol-Myers Company: *See—*
Cundall, Robert L.; and Walker, Derek, 4,374,982, Cl. 544-16.000.
Lim, Gary M. F.; and Endo, Masaki, 4,374,994, Cl. 548-251.000.
British Nuclear Fuels Limited: *See—*
Stewart, Roy, 4,374,787, Cl. 264-0.500.
Brockman, Thomas H. Cable testing system. 4,374,473, Cl. 73-158.000.
Brodie, Michael. Adjustable socket with detachable or lockable engaging handle component. 4,374,481, Cl. 81-115.000.
Brot, Nathan; and Weissbach, Herbert, to Hoffmann-La Roche Inc. Novel reductase. 4,374,928, Cl. 435-68.000.
Brown, Michael A.; and Kalivretenos, Chris A., to United States of America, Navy. Adapter assembly for flat trajectory flight. 4,374,577, Cl. 244-3.210.
Brown, Michael L.: *See—*
Stortroen, Don J.; and Brown, Michael L., 4,374,491, Cl. 100-73.000.
Brown, Paul L.; Lee, Chi-Long; and Maxson, Myron T., to Dow Corning Corporation. Low temperature silicone gel. 4,374,967, Cl. 528-15.000.
Brown, Richard I.; and Bilstad, Arnold C., to Baxter Travenol Laboratories, Inc. Method and apparatus for obtaining a desired rate of plasma collection from a membrane plasmapheresis filter. 4,374,731, Cl. 210-637.000.

Brown, Robert J. S.: *See—*
Thompson, Don D.; Brown, Robert J. S.; and Runge, Richard J., 4,375,090, Cl. 367-73.000.
Bruentrup, Heinrich: *See—*
Gerke, Peter; Arndt, Gerhard; Roescheisen, Friedrich; and Bruentrup, Heinrich, 4,375,098, Cl. 370-110.100.
Buchele, Richard: *See—*
Brandt, Horst; Hornle, Reinhold; Buchele, Richard; and Wiegner, Dieter, 4,374,642, Cl. 8-639.000.
Bullen, Ronald S.; and Lillies, Allan T., to L.H.B. Investment, Inc. Carbon dioxide fracturing process and apparatus. 4,374,545, Cl. 166-280.000.
Burlone, Dominick A., to Badische Corporation. Polymeric color concentrates for thermoplastic polymeric materials. 4,374,641, Cl. 8-557.000.
Burmakin, Viktor M.: *See—*
Azbukin, Vladimir G.; Balandin, Jury F.; Gorynin, Igor V.; Gluskin, Lev Y.; Zvezdin, Jury I.; Ignatenko, Alexandr G.; Krasnov, Alexandr N.; Melekhov, Rostislav K.; Osipova, Inna S.; Pavlov, Valery N.; Khokhlov, Alexandr A.; Stepanov, Ivan A.; Anfimov, Alexandr F.; Ardentov, Vasily V.; Burmakin, Viktor M.; Ignatov, Viktor A.; Rokhlin, Eduard A.; and Zhitkov, Vladimir V., 4,374,680, Cl. 148-2.000.
Burns & Roe, Inc.: *See—*
Rao, Subbarao N., 4,374,649, Cl. 48-192.000.
Burton, Clark R., to Compair, Inc. Classification instrument. 4,374,459, Cl. 33-174.00C.
C. Desaga GmbH Nachf. Erich Fecht: *See—*
Vesterberg, Olof A. Y., 4,374,723, Cl. 204-299.00R.
Cain, David E., to Halliburton Company. Pressurized density measuring apparatus. 4,374,474, Cl. 73-433.000.
California Institute of Technology: *See—*
Gupta, Amitava; Ingham, John D.; and Yavrouian, Andre H., 4,374,955, Cl. 525-281.000.
Callander, Douglas D.: *See—*
Massey, Fred L.; and Callander, Douglas D., 4,374,949, Cl. 524-720.000.
Callicott, Robert H., to Procter & Gamble Company, The. Method and composition to inhibit staining of porcelain surfaces by manganese. 4,374,572, Cl. 239-37.000.
Campbell, John R.: *See—*
Loucks, George R.; and Campbell, John R., 4,374,959, Cl. 525-394.000.
Canada, Atomic Energy of, Limited: *See—*
Chuang, Karl T.; Roett, Maurice F.; and Lemon, Francis W., 4,374,907, Cl. 429-57.000.
Canada, Her Majesty the Queen in right of, as represented by the Minister of National Defence: *See—*
Hsia, Jen C., 4,374,857, Cl. 424-317.000.
Canon Kabushiki Kaisha: *See—*
Horyu, Sakae, 4,375,060, Cl. 340-365.00R.
Kitamura, Takashi, 4,375,063, Cl. 346-108.000.
Kitamura, Takashi, 4,375,067, Cl. 346-160.000.
Matsumura, Susumu; and Suzuki, Takashi, 4,374,612, Cl. 354-53.000.
Canterino, Peter J.; and Allen, Craig E., to Mobil Oil Corporation. Multidirectionally oriented films. 4,374,690, Cl. 156-229.000.
Carl Still GmbH and Co. KG, Firma: *See—*
Karger, Robert; and Dungs, Horst, 4,374,811, Cl. 423-240.000.
Carlson, William J., to Automated Industrial Systems, Inc. Laser strip marker. 4,375,025, Cl. 219-121.0LH.
Carlson, William L., Jr.: *See—*
Nelson, Virgil W.; and Carlson, William L., Jr., 4,375,047, Cl. 318-48.000.
Carra', Sergio: *See—*
Scotti, Carlo; Pace, Renato C.; and Carra', Sergio, 4,374,675, Cl. 106-300.000.
Carter, Leewood C.; Neary, Robin P.; and Curtis, Jay C., to Book Covers, Inc. Method of making a book cover and pocket element therefor. 4,374,441, Cl. 412-3.000.
Carucci, Alberto; and Moore, Bernard C., to American Standard Inc. Casting installations. 4,374,635, Cl. 425-441.000.
Casio Computer Co., Ltd.: *See—*
Kashio, Toshio, 4,374,622, Cl. 368-74.000.
Cassella Aktiengesellschaft: *See—*
Tappe, Horst; Mayer, Hans; and Hofmann, Klaus, 4,374,640, Cl. 8-526.000.
Castro, Carlos A., to Texas Instruments Incorporated. Process for forming HgCoTe alloys selectively by IR illumination. 4,374,678, Cl. 148-1.500.
Cea, Theresa: *See—*
Glass, Michael; and Cea, Theresa, 4,374,858, Cl. 426-5.000.
Celanese Corporation: *See—*
Roberts, Donald R.; Kritchevsky, Gina R.; and Hannon, Martin J., 4,374,879, Cl. 428-35.000.
Celentino, James L.: *See—*
Smith, Roger R.; and Celentino, James L., 4,374,593, Cl. 280-491.00E.
Cendre, Andre: *See—*
Nguyen, Jean-Paul; Laval, Emmanuel; and Cendre, Andre, 4,374,547, Cl. 175-45.000.
Centre Technique de l'Industrie des Papiers, Cartons et Celluloses: *See—*
Lebeau, Louis; and Bornard, Guy, 4,374,703, Cl. 162-253.000.
Cerracchio, Nicholas, to Video Education, Inc. System for formatting data on video tape for high accuracy recovery. 4,375,101, Cl. 371-69.000.
Certified Chemical & Equipment Co.: *See—*
Copperman, Marcus, 4,374,446, Cl. 15-415.00A.
Ceshkovsky, Ludwig: *See—*
Dakin, Wayne R.; and Ceshkovsky, Ludwig, 4,375,091, Cl. 369-32.000.
Chagnon, Mark S.; Lester, Joseph E.; and Natansohn, Samuel, to GTE Laboratories Incorporated. Process for the separation of molybdenum values from tungsten values. 4,374,809, Cl. 423-54.000.
Chamberlin, Kim S., to Eastman Kodak Company. Process for the preparation of the sulfate salt of 2-amino-5-alkylthio-1,3,4-thiadiazoles. 4,374,993, Cl. 548-141.000.
Chambers, Charles W., Jr., to Tellabs, Inc. Improved electronic hybrid circuit. 4,375,015, Cl. 179-170.0NC.
Charles, Harold. Electro conductive polymer compositions and new materials found useful in their preparation. 4,374,760, Cl. 252-518.000.
Charles of the Ritz Group Ltd.: *See—*
Puchalski, Eugene; Donahue, Frances A.; and Dixon, Richard P., 4,374,766, Cl. 260-123.700.
Chemplex Company: *See—*
Pullukat, Thomas J.; and Hoff, Raymond E., 4,374,753, Cl. 252-429.00B.
Chen, Catherine S. H., to Mobil Oil Corporation. Water soluble surfactant mobility control agent in oil recovery. 4,374,740, Cl. 252-8.55D.
Chen, Gilbert K.; and Holmes, Timothy L., to Koch Engineering Company, Inc. Reverse-jet scrubber apparatus and method. 4,374,813, Cl. 423-242.000.
Cherry, Hitesh: *See—*
Bright, Edward J.; Cherry, Hitesh; Dehoff, Robert E.; Fedder, James L.; and Williams, Tom R., 4,374,607, Cl. 339-253.00R.
Chevron Research Company: *See—*
Bezman, Susan A., 4,374,647, Cl. 44-56.000.
McCoy, Charles S., 4,374,654, Cl. 55-71.000.
Sweeney, W. Alan, 4,374,648, Cl. 44-56.000.
Thompson, Don D.; Brown, Robert J. S.; and Runge, Richard J., 4,375,090, Cl. 367-73.000.
Chisso Corporation: *See—*
Inukai, Takashi; Sato, Hideo; Inoue, Hiromichi; and Fukui, Masahiro, 4,374,748, Cl. 252-299.660.
Chisso Engineering Co. Ltd.: *See—*
Sawai, Kiyoshi; and Kawase, Takao, 4,374,705, Cl. 203-19.000.
Chou, Yungnien J.; and Saam, John C., to Dow Corning Corporation. Method for preparing polyacetals and polyketals by emulsion polymerization. 4,374,953, Cl. 525-153.000.
Christensen, Bruce D.: *See—*
Akkerman, Neil H.; and Christensen, Bruce D., 4,374,487, Cl. 92-95.000.
Christensen, Burton G.; Heck, James V.; and Szymonifka, Michael J., to Merck & Co., Inc. 6-(1-Hydroxyethyl)cyclonocardicin. 4,374,848, Cl. 424-274.000.
Christensen, Burton G.; and Heck, James V., to Merck & Co., Inc. 6-Amidocyclonocardicins. 4,374,849, Cl. 424-274.000.
Christopher, Todd J.: *See—*
Kelleher, Kevin C.; and Christopher, Todd J., 4,375,094, Cl. 369-43.000.
Christy, Marcia E.: *See—*
Anderson, Paul S.; Christy, Marcia E.; Evans, Ben E.; and Remy, David C., 4,374,838, Cl. 424-256.000.
Chuang, Karl T.; Roett, Maurice F.; and Lemon, Francis W., to Canada, Atomic Energy of, Limited. Gaseous hydrogen and oxygen combining and condensing device. 4,374,907, Cl. 429-57.000.
Ciba-Geigy AG: *See—*
Tzikas, Athanassios, 4,374,989, Cl. 544-339.000.
Ciba-Geigy Corporation: *See—*
Evans, Samuel; Rasberger, Michael; and Gegner, Eberhard, 4,374,742, Cl. 252-48.400.
Gruenfeld, Norbert, 4,374,847, Cl. 424-274.000.
Ciba-Geigy Ltd.: *See—*
Mollet, Herbert; and Wyrsch, Dieter, 4,374,914, Cl. 430-15.000.
Cincinnati Milacron Inc.: *See—*
Rieder, Walter E., 4,374,741, Cl. 252-34.000.
Cities Service Co.: *See—*
Newcombe, Jack, 4,374,734, Cl. 210-708.000.
Citizen Watch Co., Ltd.: *See—*
Murata, Toshio, 4,374,624, Cl. 368-250.000.
CKD Corporation: *See—*
Hayakawa, Masatoshi; and Sakazaki, Yoshitami, 4,375,024, Cl. 219-56.000.
Claiborne, Barbara T., to Dixie Yarns, Inc. System for preventing static electricity on laundered textile materials. 4,374,639, Cl. 8-137.000.
Clark Equipment Company: *See—*
Bartow, Richard J., 4,374,550, Cl. 187-9.00E.
Clark, Gary T.: *See—*
Fleischer, Jean C.; Clark, Gary T.; and Maner, Ronald J., 4,374,768, Cl. 260-158.000.
Clawson, Lawrence G.: *See—*
Massey, Lester G.; Clawson, Lawrence G.; and Syska, Andrew J., 4,374,540, Cl. 165-1.000.
Cocco, Eugene R.; Pflugrad, William G.; and Small, Byron L., to Western Electric Company, Incorporated. Tapered retractile cords. 4,375,012, Cl. 174-69.000.
Coe, Noel N.: *See—*
Doonan, David F.; and Coe, Noel N., 4,374,985, Cl. 544-190.000.

Cohen, Stanley N.: *See—*
Sninsky, John J.; and Cohen, Stanley N., 4,374,927, Cl. 435-68.000.
Cohn, Alan E., to Goodyear Tire & Rubber Company, The. Method of constructing tire and identification tag therefor. 4,374,461, Cl. 40-2.00R.
Cointot, Denis; Langlois, Patrice; and de Passoz, Guy, to Societe Anonyme de Telecommunications. Device for digit rate reduction of PCM-signals. 4,375,013, Cl. 179-15.55R.
Cole, Bernard M. Automatically expanding pop-up decoration. 4,374,877, Cl. 428-9.000.
Cole, William E.: *See—*
Sakhuja, Ravinder K.; Cole, William E.; and Pavlakis, Dimitris, 4,374,660, Cl. 65-335.000.
Colgate-Palmolive: *See—*
Fine, Ralph; and Weiss, Sidney, 4,374,822, Cl. 424-49.000.
Colgate-Palmolive Company: *See—*
Harvey, Kenneth; and Hayes, Harry, 4,374,823, Cl. 424-52.000.
Collin, Per H.; and Bengtsson, Erik A., to Stora Kopparbergs Bergslags AB. Method and apparatus for reducing an iron oxide material in a fluidized bed. 4,374,663, Cl. 75-26.000.
Colombo, Enzo, to Continua International Continuous Casting S.p.A. Plate mold for the continuous casting of metals. 4,374,539, Cl. 164-443.000.
Colpaert, James J., to Bendix Corporation, The. Duo-servo drum brake. 4,374,554, Cl. 188-106.00A.
Combette, Marc; and Ollivier, Jean, to Olin Corporation. Powder actuated piston tool with power adjustment. 4,374,567, Cl. 227-10.000.
Combs, Daniel J., to Occidental Chemical Corporation. Process for plating polymeric substrates. 4,374,709, Cl. 204-30.000.
Comer, Robert C., to Toro Company, The. Attachment for rotary lawn mower. 4,374,465, Cl. 56-12.700.
Cominco Ltd.: *See—*
Micklethwaite, William F. H., 4,374,684, Cl. 148-13.100.
Compaan, Klaas: *See—*
de Haan, Maarten R.; Compaan, Klaas; and Hissel, Leopold H., 4,375,088, Cl. 365-234.000.
Compair, Inc.: *See—*
Burton, Clark R., 4,374,459, Cl. 33-174.00C.
Compensating Tension Controls, Inc.: *See—*
Ryan, Ralph L., 4,374,576, Cl. 242-58.400.
Conoco Inc.: *See—*
Berge, Charles T.; Mack, Mark P.; and Starks, Charles M., 4,374,755, Cl. 252-431.00R.
Conrad, Robert. Fireplace air distribution system. 4,374,515, Cl. 126-143.000.
Consolidated Foods Corporation: *See—*
Bell, Cecil R., Jr.; Nakhle, George D.; and Edwards, A. Russell, 4,374,501, Cl. 112-121.150.
Consolidated Natural Gas Service Company, Inc.: *See—*
Massey, Lester G.; Clawson, Lawrence G.; and Syska, Andrew J., 4,374,540, Cl. 165-1.000.
Container Corporation of America: *See—*
Howlett, Robert J., 4,374,560, Cl. 206-44.00R.
Continental Packaging Company, Inc.: *See—*
Hekal, Ihab M., 4,374,714, Cl. 204-131.000.
Continua International Continuous Casting S.p.A.: *See—*
Colombo, Enzo, 4,374,539, Cl. 164-443.000.
Cooke, Anson R.: *See—*
Fritz, Charles D.; Evans, Wilbur F.; and Cooke, Anson R., 4,374,661, Cl. 71-86.000.
Copperman, Marcus, to Certified Chemical & Equipment Co. Vacuum nozzle for carpeted stair treads and risers. 4,374,446, Cl. 15-415.00A.
Coral Chemical Company: *See—*
Schueneman, John E., 4,374,681, Cl. 148-6.14R.
Coran, Aubert Y.; and Patel, Raman, to Monsanto Company. Olefin polymer modified with substituted maleamic acid. 4,374,956, Cl. 525-296.000.
Cornaby, David T.: *See—*
Halvorsen, Eric J.; and Cornaby, David T., 4,375,069, Cl. 360-49.000.
Cornez, Andre: *See—*
Piedboeuf, Albert; Polard, Victor; and Cornez, Andre, 4,374,873, Cl. 427-349.000.
Corning Glass Works: *See—*
Courbin, Philippe; Kerko, David J.; Mazeau, Jean P.; and Morse, David L., 4,374,931, Cl. 501-13.000.
Cothran, Philip E.: *See—*
Bolich, Raymond E., Jr.; Hartsough, Lloyd B.; and Cothran, Philip E., 4,374,825, Cl. 424-70.000.
Coulter Electronics, Inc.: *See—*
Armstrong, Douglas, 4,374,644, Cl. 436-63.000.
Courbin, Philippe; Kerko, David J.; Mazeau, Jean P.; and Morse, David L., to Corning Glass Works. Photochromic glass suitable for ophthalmic applications. 4,374,931, Cl. 501-13.000.
Crosby, John B., to Beckman Instruments, Inc. RMS Converter. 4,375,038, Cl. 307-492.000.
Crossley, Roger, to John Wyeth and Brother Limited. Certain arylaliphaticthio-pyridine type compounds. 4,374,992, Cl. 546-298.000.
Crowley Daniel J.; and Stine, Jon D., to AMP Incorporated. Mounting means for magnetic read head. 4,375,071, Cl. 360-104.000.
Crump, Eldon E.: *See—*
Thigpen, Ben B.; Crump, Eldon E.; and Shave, David G., 4,375,089, Cl. 367-20.000.
Cubic Western Data: *See—*
Miller, Gregory E.; and Toth, John E., 4,374,564, Cl. 209-583.000.
Cundall, Robert L.; and Walker, Derek, to Bristol-Myers Company. Cepham compounds. 4,374,982, Cl. 544-16.000.
Cuprinol Limited: *See—*
Hilditch, Edward A.; Hambling, Robert E.; Sparks, Colin R.; and Walker, David A., 4,374,852, Cl. 424-289.000.
Curtis, Jay C.: *See—*
Carter, Leewood C.; Neary, Robin P.; and Curtis, Jay C., 4,374,441, Cl. 412-3.000.
Cusano, Dominic A.; Swank, Robert K.; and White, Philip J., to General Electric Company. Index-matched phosphor scintillator structures. 4,374,749, Cl. 252-301.360.
CXA Ltd./CXA Ltee: *See—*
Davitt, Alan L.; and Yuill, Kenneth A., 4,374,686, Cl. 149-21.000.
Cycles Peugeot: *See—*
Lacroix, Bernard, 4,374,549, Cl. 180-207.000.
Czupryna, Gary: *See—*
Natansohn, Samuel; and Czupryna, Gary, 4,374,713, Cl. 204-109.000.
Dai Nippon Insatsu Kabushiki Kaisha: *See—*
Kaneki, Satoru; Kikuchi, Yuzi; and Sasaki, Yoji, 4,374,912, Cl. 430-5.000.
Dakin, Wayne R.; and Ceshkovsky, Ludwig, to Discovision Associates. Method and apparatus for information retrieval from an optically readable storage medium. 4,375,091, Cl. 369-32.000.
Danfoss A/S: *See—*
Jespersen, Aksel; and Eriksen, Peter A., 4,375,048, Cl. 318-484.000.
Zacho, Per G.; and Ahrendsen, Kjeld, 4,375,029, Cl. 219-493.000.
Darragh, Kirk V.: *See—*
Arzoumanidis, Gregory G.; and Darragh, Kirk V., 4,374,816, Cl. 423-304.000.
Data General Corporation: *See—*
Williams, James B., 4,375,077, Cl. 363-91.000.
Dathe, Joachim, to Siemens Aktiengesellschaft. Method for encapsulating components with cases and an encapsulation provided by the method. 4,375,008, Cl. 174-17.050.
Daucher, Hans: *See—*
Braha, Alexandru; Daucher, Hans; Hess, Klaus; Kroetzsch, Peter; Merkel, Helmut; Roedl, Roland; Schwaegerl, Walter; and Stickel, Richard, 4,374,730, Cl. 210-608.000.
Daussin, Bernard; and Hennemann, Jean, to Alsthom-Unelec. Circuit breaker fitted with a device for indicating a short circuit. 4,375,022, Cl. 200-148.00R.
Davey, Donald G., to Owens-Illinois, Inc. Multiple gob shearing apparatus. 4,374,659, Cl. 65-334.000.
David Manufacturing Company: *See—*
Stille, Larry, 4,374,621, Cl. 366-261.000.
David, Tom. Condiment grinder-dispenser. 4,374,574, Cl. 241-169.100.
Davies, Roderick D.: *See—*
Scott, David B.; Davies, Roderick D.; and See, Yee-Chaung, 4,374,700, Cl. 156-656.000.
Davitt, Alan L.; and Yuill, Kenneth A., to CXA Ltd./CXA Ltee. Delay composition for detonators. 4,374,686, Cl. 149-21.000.
Davy McKee Aktiengesellschaft: *See—*
Koschinek, Gunter; and Wandel, Dietmar, 4,374,797, Cl. 264-210.300.
Dayen, Leonid, to Horton Manufacturing Co., Inc. Pivoted lever caliper brake. 4,374,552, Cl. 188-72.900.
DeBona, Bruce T.: *See—*
Prevorsek, Dusan C.; DeBona, Bruce T.; and Kesten, Yali, 4,374,973, Cl. 528-191.000.
Decker, Walter; Schoen, Ernst; Grabhoefer, Herbert; and Weyland, Peter, to BASF Aktiengesellschaft. Process for the preparation of flexible polyurethane foams employing polyester-polyether polyol mixtures. 4,374,935, Cl. 521-173.000.
Deets, Gary L.: *See—*
Lee, Yoon C., deceased; Deets, Gary L.; and Trementozzi, Quirino A., 4,374,951, Cl. 525-73.000.
Degussa Aktiengesellschaft: *See—*
Fratzer, Gerhard; and Beck, Bernhard, 4,374,803, Cl. 422-176.000.
Kleemann, Axel; and Samson, Marc, 4,374,995, Cl. 548-309.000.
de Haan, Maarten R.; Compaan, Klaas; and Hissel, Leopold H., to U.S. Philips Corporation. Optically readable record carrier with track variations which provide clock and tracking signals and apparatus for recording and/or reproducing data from such a record carrier. 4,375,088, Cl. 365-234.000.
Dehoff, Robert E.: *See—*
Bright, Edward J.; Cherry, Hitesh; Dehoff, Robert E.; Fedder, James L.; and Williams, Tom R., 4,374,607, Cl. 339-253.00R.
de Passoz, Guy: *See—*
Cointot, Denis; Langlois, Patrice; and de Passoz, Guy, 4,375,013, Cl. 179-15.55R.
Desai, Jaydev D.; and Moffatt, William G., to United States of America, Navy. Gold based electrical materials. 4,374,668, Cl. 420-507.000.
Descamps, Marcel; Urbain, Marcel, deceased; Urbain, Claire, legal representative; Urbain, Jacques J. Z., legal representative; Urbain, Jean P. M. C., legal representative; and Urbain, Nadine C. J., legal representative, to S. A. Labaz N.V. Pyridoxine derivatives, and use in therapeutics. 4,374,841, Cl. 424-263.000.
Detroit Edison Company, The: *See—*
Funston, Joseph; Krell, William C.; and Zimmer, Franklin V., 4,374,672, Cl. 106-97.000.
Devanney, Raymond H., to Veeder Industries Inc. Extended range variator conversion mechanism. 4,375,030, Cl. 235-61.00L.
Devine, Thomas M., Jr., to General Electric Company. Stabilized ferritic stainless steel for preheater and reheater equipment applications. 4,374,666, Cl. 75-126.00D.

De Vizzi, Francesco: *See—*
Pardini, Franco P.; and De Vizzi, Francesco, 4,375,021, Cl. 200-147.00B.
Diaz, William J. Extension tool. 4,374,480, Cl. 81-57.300.
Dickie, Ray A.; and Holubka, Joseph W., to Ford Motor Company. Alkaline resistant organic coatings for corrosion susceptible substrates II. 4,374,965, Cl. 525-510.000.
Discovision Associates: *See—*
Dakin, Wayne R.; and Ceshkovsky, Ludwig, 4,375,091, Cl. 369-32.000.
Holmes, John R., 4,374,636, Cl. 425-589.000.
Dixie Yarns, Inc.: *See—*
Claiborne, Barbara T., 4,374,639, Cl. 8-137.000.
Dixon, Richard P.: *See—*
Puchalski, Eugene; Donahue, Frances A.; and Dixon, Richard P., 4,374,766, Cl. 260-123.700.
Dobbs, Kenneth: *See—*
Barry, Patrick D.; Lowrey, Robert E.; and Dobbs, Kenneth, 4,375,080, Cl. 364-551.000.
Doherty, James B.; and Allison, Debra L., to Merck & Co., Inc. Process for the preparation of zomepirac and related compounds. 4,374,997, Cl. 548-539.000.
Donahue, Frances A.: *See—*
Puchalski, Eugene; Donahue, Frances A.; and Dixon, Richard P., 4,374,766, Cl. 260-123.700.
Doonan, David F.; and Coe, Noel N., to Olin Corporation. Hydrated alkali metal dichloroisocyanurate and its production. 4,374,985, Cl. 544-190.000.
Dorey II, John K.; and Huneke, James T., to Western Electric Company, Inc. Selective metal etch technique. 4,374,869, Cl. 427-97.000.
Dotz, Karl H., to Hoffmann-La Roche Inc. Process for preparing vitamin K. 4,374,775, Cl. 260-396.00K.
Dow Chemical Company, The: *See—*
Frisch, Kurt C., Jr., 4,374,969, Cl. 528-69.000.
Garrou, Philip E., 4,374,999, Cl. 549-453.000.
Dow Corning Corporation: *See—*
Brown, Paul L.; Lee, Chi-Long; and Maxson, Myron T., 4,374,967, Cl. 528-15.000.
Chou, Yungnien J.; and Saam, John C., 4,374,953, Cl. 525-153.000.
Drapkin, Herbert, to Perma-Comb Systems, Inc. Honeycomb. 4,374,440, Cl. 6-10.000.
Drauglis, Edmund; Wielonski, Roy F.; and Sliemers, Francis A., to General Motors Corporation. Plasma polymerized interfacial coatings for improved adhesion of sputtered bright metal on plastic. 4,374,717, Cl. 204-192.00C.
DRW Corporation: *See—*
Bekker, Marthinus J.; and Hall, Douglas J. M., 4,374,484, Cl. 89-14.00C.
Ducarre, Michel: *See—*
Arsac, Andre; Ducarre, Michel; Grosbois, Jean; and Nener, Thomas, 4,374,893, Cl. 428-263.000.
Dudgeon, Charles D., to General Electric Company. Polymerization initiator compositions. 4,374,751, Cl. 252-426.000.
Dugan, William P., to General Dynamics, Pomona Division. Fine line circuitry probes and method of manufacture. 4,374,708, Cl. 204-11.000.
Duh, Ben, to Goodyear Tire & Rubber Company, The. Process for the production of high molecular weight polyester. 4,374,975, Cl. 528-272.000.
Dunbar, James J.: *See—*
Rothwell, Ronald E.; Rowan, Hugh H.; and Dunbar, James J., 4,374,960, Cl. 525-436.000.
Dungs, Horst: *See—*
Karger, Robert; and Dungs, Horst, 4,374,811, Cl. 423-240.000.
Du Pont de Nemours, E. I., and Company: *See—*
Guenter, Thomas E., 4,374,820, Cl. 423-588.000.
Mahr, Tibor G., 4,374,898, Cl. 428-447.000.
Marcus, Sanford M., 4,375,007, Cl. 136-256.000.
Robinson, Ivan M., 4,374,970, Cl. 528-79.000.
Durant, Graham J.; Ganellin, Charon R.; and Sach, George S., to SmithKline & French Laboratories Limited. Pharmacologically active 1,3-bis[(2-heterocyclyl-methyl-thio)ethyl)ethyl)guanidino]alkane derivatives. 4,374,839, Cl. 424-263.000.
Dusza, John P.; and Albright, Jay D., to American Cyanamid Company. 4-Heteroarylimidazo-[1,5-A]pyrimidines. 4,374,988, Cl. 544-281.000.
Dwyer Instruments, Inc.: *See—*
Hestich, John, 4,374,475, Cl. 73-736.000.
E. Beaudrey & Co. Societe Anonyme: *See—*
Jackson, Philip, 4,374,736, Cl. 210-783.000.
E. R. Squibb & Sons, Inc.: *See—*
Glavan, Kenneth A.; and Kronauge, James F., 4,374,821, Cl. 424-4.000.
Easter, James M., II. Controlled sludge composting system. 4,374,804, Cl. 422-184.000,
Eastman Kodak Company: *See—*
Chamberlin, Kim S., 4,374,993, Cl. 548-141.000.
Fleischer, Jean C.; Clark, Gary T.; and Maner, Ronald J., 4,374,768, Cl. 260-158.000.
Giles, Ralph R.; and Weaver, Max A., 4,374,769, Cl. 260-187.000.
Hines, Stephen P., 4,374,611, Cl. 353-27.00R.
Hyatt, John A.; and Kashdan, David S., 4,374,770, Cl. 260-207.100.
Lelental, Mark; and Goncher, Gary M., 4,374,916, Cl. 430-31.000.
Marcus, Michael A., 4,375,042, Cl. 310-357.000.
Pacifici, James G.; Newland, Gordon C.; and Moore, Howard G., 4,374,716, Cl. 204-159.190.
Snoke, Roy E.; and Goodhue, Charles T., 4,374,930, Cl. 435-190.000.
Weaver, Max A.; and Fleischer, Jean C., 4,374,767, Cl. 260-158.000.
Eaton Corporation: *See—*
Hamilton, Stephen R., 4,374,881, Cl. 428-36.000.
Echaburu, Jose J.: *See—*
Everlith, Edward A.; and Echaburu, Jose J., 4,374,590, Cl. 273-326.000.
Eckert, Guenter; Wuertele, Lothar; Petersen, Harro; Goeckel, Ulrich; and Fischer, Kurt, to BASF Aktiengesellschaft. Casein coatings for leather insolubilized with alkoxy alkyl ureas. 4,374,872, Cl. 427-338.000.
Edwards, A. Russell: *See—*
Bell, Cecil R., Jr.; Nakhle, George D.; and Edwards, A. Russell, 4,374,501, Cl. 112-121.150.
EFB Inc.: *See—*
Zahedi, Karim; and Alexander, Jeffrey C., 4,374,652, Cl. 55-6.000.
Eibeck, Richard E.: *See—*
Anello, Louis G.; Van Der Puy, Michael; Robinson, Martin A.; and Eibeck, Richard E., 4,374,782, Cl. 260-544.00F.
Eichler, Jurgen; Herz, Claus; Neisius, Karl-Heinz; and Wehner, Gregor, to Merck Patent Gesellschaft mit Beschrankter Haftung. Aromatic-aliphatic ketones useful as photoinitiators. 4,374,984, Cl. 544-80.000.
Eickmann, Karl. Radial piston motor or pump. 4,374,486, Cl. 91-488.000.
Ek, Eric M., to United States of America, Army. Low thermal stress electrode. 4,375,044, Cl. 315-5.380.
Electric Power Research Institute: *See—*
Whitehurst, Darrell D.; Mitchell, Thomas O.; and Farcasiu, Malvina, 4,374,725, Cl. 208-8.0LE.
Electricite de France: *See—*
Roger, Gillet, 4,375,043, Cl. 310-258.000.
El-Shazly, Mohamed F.; Baker, Kenneth D.; and Rymwid, Yvonne, to Occidental Chemical Corporation. Process for the immersion deposition of gold. 4,374,876, Cl. 427-443.100.
Endo, Masaki: *See—*
Lim, Gary M. F.; and Endo, Masaki, 4,374,994, Cl. 548-251.000.
Eriksen, Peter A.: *See—*
Jespersen, Aksel; and Eriksen, Peter A., 4,375,048, Cl. 318-484.000.
Ernst, Horst M.: *See—*
Olschewski, Armin; Brandenstein, Manfred; Walter, Lothar; and Ernst, Horst M., 4,374,556, Cl. 192-98.000.
Escher, Balint; Prince, Dominique; and Romanet, Rene, to Lignes Telegraphiques et Telephoniques. Tantalum capacitors with internal current-limiting means. 4,375;075, Cl. 361-433.000.
Essex Group, Inc.: *See—*
Roberts, Jonathan W., 4,374,892, Cl. 428-233.000.
Etablissements Mesnel: *See—*
Mesnel, Francois, 4,374,880, Cl. 428-36.000.
Ethyl Corporation: *See—*
Jackisch, Philip F., 4,375,006, Cl. 570-105.000.
Li, Hsueh M., 4,374,815, Cl. 423-300.000.
European Space Agency: *See—*
Renner, Udo; and Preukschat, A. Werner, 4,374,579, Cl. 244-158.00R.
Evans, Ben E.: *See—*
Anderson, Paul S.; Christy, Marcia E.; Evans, Ben E.; and Remy, David C., 4,374,838, Cl. 424-256.000.
Evans, Samuel; Rasberger, Michael; and Gegner, Eberhard, to Ciba-Geigy Corporation. Novel lubricant additives. 4,374,742, Cl. 252-48.400.
Evans, Wilbur F.: *See—*
Fritz, Charles D.; Evans, Wilbur F.; and Cooke, Anson R., 4,374,661, Cl. 71-86.000.
Everlith, Edward A.; and Echaburu, Jose J. Mass-produced molded plastic cesta. 4,374,590, Cl. 273-326.000.
Fales, Howard S.: *See—*
Peterson, John O. H.; and Fales, Howard S., 4,375,002, Cl. 564-445.000.
Fan, You-Ling, to Union Carbide Corporation. Water-borne thermoplastic polyhydroxyether compositions. 4,374,875, Cl. 427-386.000.
Farcasiu, Malvina: *See—*
Whitehurst, Darrell D.; Mitchell, Thomas O.; and Farcasiu, Malvina, 4,374,725, Cl. 208-8.0LE.
Faria, Sixdeniel, to GTE Products Corporation. Infrared photoconductor for electrophotography of a copper activated mercury containing cadmium selenide telluride. 4,374,917, Cl. 430-94.000.
Farmers Pride Cheese, Inc.: *See—*
Peterson, Harold J., 4,374,488, Cl. 99-459.000.
Farrissey, William J.; McLaughlin, Alexander; and Waszeciak, Douglas P., to Upjohn Company, The. Process for preparing particleboard. 4,374,791, Cl. 264-39.000.
Fassell, Wayne M., to Michigan Technological University, Board of Control of. Treatment during transport of solid waste. 4,374,499, Cl. 110-243.000.
Favier, Colette; Pinhas, Henri; Beranger, Serge; and Pascal, Jean-Claude, to Laroche-Navarron, S.A. Piperazine derivatives of theophylline. 4,374,835, Cl. 424-250.000.
Favier, Colette; Pinhas, Henri; Beranger, Serge; and Pascal, Jean-Claude, to Laroche Navarron, S.A. Piperazine derivatives of theobromine. 4,374,837, Cl. 424-253.000.
Fayette Manufacturing Corporation: *See—*
Barnes, Dale R., 4,374,631, Cl. 416-23.000.
Fearnside, James T.; and Stephens, Thomas P., to Hewlett-Packard Company. Shielded electrical cable. 4,375,009, Cl. 174-36.000.

Fedder, James L.: *See—*
Bright, Edward J.; Cherry, Hitesh; Dehoff, Robert E.; Fedder, James L.; and Williams, Tom R., 4,374,607, Cl. 339-253.00R.
Ferrar, Carl M., to United Technologies Corporation. Very fine diameter uniform wires. 4,374,901, Cl. 428-607.000.
Feuerstein, Diane: *See—*
Snyder, William R.; and Feuerstein, Diane, 4,374,733, Cl. 210-701.000.
Fiato, Rocco A.: *See—*
Argento, Benny J.; Walker, Wellington E., deceased; and Fiato, Rocco A., 4,374,752, Cl. 252-429.00R.
Fine, Ralph; and Weiss, Sidney, to Colgate-Palmolive. Oral composition. 4,374,822, Cl. 424-49.000.
Fisch, Michael H.: *See—*
Liauw, Koei-Liang; and Fisch, Michael H., 4,374,945, Cl. 524-114.000.
Fischer, Bruno: *See—*
Blahna, Nadezda; and Fischer, Bruno, 4,374,866, Cl. 427-10.000.
Fischer, Charles P.: *See—*
Hemmer, Valentine J.; Piscitelli, R. Amelia; Fischer, Charles P.; and Washburn, James C., 4,374,604, Cl. 339-59.00R.
Fischer, Edgar; Brandrup, Johannes; and Weinlich, Jurgen, to Hoechst Aktiengesellschaft. Process for the manufacture of vinyl chloride polymers by coating polymerization vessels. 4,374,966, Cl. 526-62.000.
Fischer, Kurt: *See—*
Eckert, Guenter; Wuertele, Lothar; Petersen, Harro; Goeckel, Ulrich; and Fischer, Kurt, 4,374,872, Cl. 427-338.000.
Fischli, Albert E.: *See—*
Branca, Quirico; Fischli, Albert E.; and Szente, Andre, 4,374,773, Cl. 260-245.500.
Fisli, Tibor, to Xerox Corporation. Multi-function document processor. 4,374,617, Cl. 355-8.000.
Fleischer, Jean C.; Clark, Gary T.; and Maner, Ronald J., to Eastman Kodak Company. Disperse dyes from 5-amino-4-halo-3-methylisothiazoles. 4,374,768, Cl. 260-158.000.
Fleischer, Jean C.: *See—*
Weaver, Max A.; and Fleischer, Jean C., 4,374,767, Cl. 260-158.000.
Fleshood, William L.: *See—*
Hein, Richard D.; and Fleshood, William L., 4,374,442, Cl. 14-16.500.
Fletcher, James W.: *See—*
Grodzka, Philomena; McCormick, Paul O.; and Fletcher, James W., 4,374,655, Cl. 55-163.000.
Fluor Corporation: *See—*
Schendel, Ronald L.; and Selleck, Frederic T., 4,374,657, Cl. 62-19.000.
FMC Corporation: *See—*
Lehman, Richard L.; and Shepherd, John A., 4,374,817, Cl. 423-319.000.
Folkers, Karl; Kubiak, Teresa M.; Stepien, Henryk M.; and Sakura, Naoki, to Board of Reagents, The University of Texas System. Biologically active thymones from the thymus. 4,374,828, Cl. 424-177.000.
Ford, Gregory A., to Phillips Petroleum Company. Vacuum vaporizing method and apparatus. 4,374,476, Cl. 73-23.100.
Ford Motor Company: *See—*
Dickie, Ray A.; and Holubka, Joseph W., 4,374,965, Cl. 525-510.000.
Labana, Santokh S.; and Theodore, Ares N., 4,374,954, Cl. 525-207.000.
Peck, Raymond E.; Petresh, Randall P.; and Benninger, Gary N., 4,374,553, Cl. 188-73.450.
Schechter, Michael M., 4,374,511, Cl. 123-448.000.
Formica Corporation: *See—*
Raghava, Ram S., 4,374,886, Cl. 428-172.000.
Foshee, Curtis L.: *See—*
Arneth, August P.; and Foshee, Curtis L., 4,375,103, Cl. 375-109.000.
Foundation: The Research Institute of Electric and Magnetic Alloys, The: *See—*
Masumoto, Hakaru; and Nakamura, Naoji, 4,374,679, Cl. 148-2.000.
Framatome: *See—*
Albin, Michel, 4,374,801, Cl. 376-264.000.
Franke, Helmut: *See—*
Birkenbach, Alfred; and Franke, Helmut, 4,374,551, Cl. 188-71.900.
Fraser, Thomas A., Jr., to Vetco Offshore, Inc. Anchor connector for tension leg. 4,374,630, Cl. 405-224.000.
Fratzer, Gerhard; and Beck, Bernhard, to Degussa Aktiengesellschaft. Catalytic waste gas converter for combustion machines. 4,374,803, Cl. 422-176.000.
Fraunhofer-Gesellschaft: *See—*
Schmidt, Helmut; Tunker, Gerhard; and Scholze, Horst, 4,374,696, Cl. 156-329.000.
Scholze, Horst; Schmidt, Helmut; and Bottner, Harald, 4,374,933, Cl. 521-64.000.
Freitag, Dieter: *See—*
Schmidt, Manfred; Freitag, Dieter; and Bottenbruch, Ludwig, 4,374,971, Cl. 528-167.000.
Frenchik, Robert A., to Minnesota Mining and Manufacturing Company. Image enhancement of photothermographic elements. 4,374,921, Cl. 430-338.000.
Freud, Paul J.: *See—*
Baxter, Ronald D.; and Freud, Paul J., 4,375,056, Cl. 338-25.000.
Freye, Anne D.; and van Arkel, Johan A., to Shell Oil Company. Process control. 4,374,653, Cl. 55-18.000.
Friedman, Michael N. Binder for perforated sheets or the like. 4,374,627, Cl. 402-21.000.
Frisch, Kurt C., Jr., to Dow Chemical Company, The. Addition polymerizable isocyanate-polyamine anaerobic adhesives. 4,374,969, Cl. 528-69.000.
Fritz, Charles D.; Evans, Wilbur F.; and Cooke, Anson R., to Union Carbide Corporation. Growth regulation process. 4,374,661, Cl. 71-86.000.
Frykhult, Rune H., to AB Celleco. Strainer drum for pulp and the like. 4,374,729, Cl. 210-232.000.
Fuji Electric Co., Ltd.: *See—*
Kikuchi, Akira; Hagiya, Akio; Shinkai, Kazuteru; Kohno, Masaru; and Saito, Kiyoshi, 4,374,477, Cl. 73-861.180.
Takahashi, Takeo; and Tabei, Koichi, 4,374,727, Cl. 209-127.00B.
Fuji Photo Film Co., Ltd.: *See—*
Hirano, Shigeo; Sugimoto, Tadao; and Tsujino, Nobuyuki, 4,374,923, Cl. 430-410.000.
Kaneko, Yujiro; and Fujisaki, Hiroshi, 4,375,031, Cl. 235-64.700.
Ohara, Yuji, 4,375,064, Cl. 346-108.000.
Ohara, Yuji, 4,375,065, Cl. 346-108.000.
Toriuchi, Masaharu, 4,374,919, Cl. 430-220.000.
Yokoyama, Shigeki; Kishimoto, Shinzo; Toriya, Itsuki; and Nakamura, Taku, 4,374,924, Cl. 430-528.000.
Fujisaki, Hiroshi: *See—*
Kaneko, Yujiro; and Fujisaki, Hiroshi, 4,375,031, Cl. 235-64.700.
Fujitsu Limited: *See—*
Yamauchi, Takahiko, 4,375,039, Cl. 307-530.000.
Fujiwara, Takashi; Kajita, Shuji; Matsushita, Tetsuo; and Manabe, Seiichi, to Asahi Kasei Kogyo Kabushiki Kaisha. Poly-p-phenyleneterephthalamide fibers excellent in fatigue resistance and process for preparation thereof. 4,374,977, Cl. 528-348.000.
Fujiwara, Takashi; Kajita, Shuji; Matsushita, Tetsuo; and Manabe, Seiichi, to Asahi Kasei Kogyo Kabushiki Kaisha. High Young's modulus poly-p-phenylene terephthalamide fiber. 4,374,978, Cl. 528-348.000.
Fukasawa, Hiromichi, to Terumo Corporation. Oxygenator. 4,374,802, Cl. 422-48.000.
Fukui, Masahiro: *See—*
Inukai, Takashi; Sato, Hideo; Inoue, Hiromichi; and Fukui, Masahiro, 4,374,748, Cl. 252-299.660.
Fukunaga, Yukio; and Tsuda, Hiroshi, to Nissan Motor Co., Ltd. Electric connector for flat cable. 4,374,603, Cl. 339-17.00F.
Funston, Joseph; Krell, William C.; and Zimmer, Franklin V., to Detroit Edison Company, The. Method of and composition for producing a stabilized fill material. 4,374,672, Cl. 106-97.000.
G-C Dental Industrial Corp.: *See—*
Tomioka, Kentaro; Hirota, Kazuo; Muramatsu, Hiroaki; and Akahane, Shoji, 4,374,936, Cl. 523-116.000.
G. D. Searle & Co.: *See—*
Pitzele, Barnett S.; and Jones, Peter H., 4,374,932, Cl. 521-32.000.
GAF Corporation: *See—*
Resnick, Bruce M., 4,374,854, Cl. 424-311.000.
Resnick, Bruce M., 4,374,855, Cl. 424-313.000.
Ganellin, Charon R.: *See—*
Durant, Graham J.; Ganellin, Charon R.; and Sach, George S., 4,374,839, Cl. 424-263.000.
Garrett, William L. Synthetic seaweed. 4,374,629, Cl. 405-24.000.
Garrou, Philip E., to Dow Chemical Company, The. Internal hydroformylation of acrolein acetals. 4,374,999, Cl. 549-453.000.
Garside, Peter G., to Allis-Chalmers Corporation. Bi-flow rotary kiln coal gasification process. 4,374,650, Cl. 48-202.000.
Gartland, Robert J., to Goodyear Tire & Rubber Company, The. Method for making an article of partially crystalline organic resin. 4,374,800, Cl. 264-522.000.
Gasser, Rupert J.; and Badertscher, Ernest, to Societe D'Assistance Technique Pour Produits Nestle S.A. Process for the production of a readily water miscible powder form amylaceous food product. 4,374,860, Cl. 426-28.000.
Gaudet, Gary G.: *See—*
Palilla, Frank C.; Gaudet, Gary G.; and Baglio, Joseph A., 4,374,819, Cl. 423-570.000.
Gauld, W. Thomas. Apparatus for screening fibrous stock. 4,374,728, Cl. 209-273.000.
Gavin, David F.: *See—*
Renner, Jacqueline M.; Scott, Robert N.; and Gavin, David F., 4,374,986, Cl. 544-221.000.
Gaylord, Norman G., to Pure Air, Inc. Method for removal of gaseous formaldehyde from the atmosphere. 4,374,814, Cl. 423-245.000.
Geary, John; and Johnson, David S., to Motorhouse Hire Limited. Vehicle transporter. 4,374,592, Cl. 280-476.00R.
Gegner, Eberhard: *See—*
Evans, Samuel; Rasberger, Michael; and Gegner, Eberhard, 4,374,742, Cl. 252-48.400.
General Dynamics, Pomona Division: *See—*
Dugan, William P., 4,374,708, Cl. 204-11.000.
General Electric Co.: *See—*
Ashby, Bruce A.; and Schroeter, Siegfried H., 4,374,674, Cl. 106-287.120.
Bolon, Donald A.; and Gorczyca, Thomas B., 4,374,972, Cl. 528-185.000.
Cusano, Dominic A.; Swank, Robert K.; and White, Philip J., 4,374,749, Cl. 252-301.360.
Devine, Thomas M., Jr., 4,374,666, Cl. 75-126.00D.
Dudgeon, Charles D., 4,374,751, Cl. 252-426.000.
Glugla, Paul G., 4,374,910, Cl. 429-197.000.
Hay, Allan S., 4,374,974, Cl. 528-219.000.

Lee, Minyoung; and Szala, Lawrence E., 4,374,651, Cl. 51-309.000.
Loucks, George R.; and Campbell, John R., 4,374,959, Cl. 525-394.000.
Pardini, Franco P.; and De Vizzi, Francesco, 4,375,021, Cl. 200-147.00B.
Prochazka, Svante; and Greskovich, Charles D., 4,374,792, Cl. 264-65.000.
Rabatin, Jacob G., 4,374,905, Cl. 428-691.000.
Singh, Raj N., 4,374,701, Cl. 156-667.000.
Starr, James A.; and Steinert, Leopold A., 4,375,104, Cl. 376-203.000.
Ward, William J., III, 4,374,891, Cl. 428-220.000.

General Motors Corporation: *See—*
Drauglis, Edmund; Wielonski, Roy F.; and Sliemers, Francis A., 4,374,717, Cl. 204-192.00C.
Harvey, Douglas J., 4,374,904, Cl. 428-648.000.

General Signal Corporation: *See—*
Nelson, Virgil W.; and Carlson, William L., Jr., 4,375,047, Cl. 318-48.000.

General Tire & Rubber Company, The: *See—*
Hein, Richard D.; and Fleshood, William L., 4,374,442, Cl. 14-16.500.

Georgia-Pacific Corporation: *See—*
Kelley, Jack R., 4,374,738, Cl. 252-8.50C.

Gerke, Peter; Arndt, Gerhard; Roescheisen, Friedrich; and Bruentrup, Heinrich, to Siemens Aktiengesellschaft. Digital telecommunications system. 4,375,098, Cl. 370-110.100.

Gesellschaft fur Biotechnologische Forschung: *See—*
Lindorfer, Walter; Schulz, Walther; Wagner, Fritz; and Jahn-Held, Wilhelm, 4,374,735, Cl. 210-772.000.

Gifford, Howard: *See—*
Stuck, Earl N.; Pigney, Keith D.; and Gifford, Howard, 4,374,789, Cl. 264-12.000.

Giles, Ralph R.; and Weaver, Max A., to Eastman Kodak Company. Water-soluble tris phenyl bisazo dyes for polyamide fibers. 4,374,769, Cl. 260-187.000.

Givaudan Corporation; and Schenk, Hanspeter. Esters of 2,3,6,6-tetramethyl-cyclohexenyl carboxylic acids and odorant mixtures thereof. 4,375,001, Cl. 560-128.000.

Glass, Michael; and Cea, Theresa, to Warner-Lambert Company. Aspartame sweetened chewing gum of improved sweetness stability. 4,374,858, Cl. 426-5.000.

Glavan, Kenneth A.; and Kronauge, James F., to E. R. Squibb & Sons, Inc. Myocardial imaging agent and method. 4,374,821, Cl. 424-4.000.

Glaxo Group Limited: *See—*
Robinson, John M., 4,374,983, Cl. 544-24.000.

Glitsch, Inc.: *See—*
McClain, Robert W., 4,374,786, Cl. 261-113.000.

Glogolja, Miroslav; and Baumgarten, Arthur A., to Reliance Electric Company. Dual-monitoring protection circuit for switching transistor. 4,375,073, Cl. 361-91.000.

Glogolja, Miroslav, to Reliance Electric Company. Dual-mode transistor turn-off. 4,375,074, Cl. 361-91.000.

Glugla, Paul G., to General Electric Company. Electrolyte for secondary electrochemical cell. 4,374,910, Cl. 429-197.000.

Gluskin, Lev Y.: *See—*
Azbukin, Vladimir G.; Balandin, Jury F.; Gorynin, Igor V.; Gluskin, Lev Y.; Zvezdin, Jury I.; Ignatenko, Alexandr G.; Krasnov, Alexandr N.; Melekhov, Rostislav K.; Osipova, Inna S.; Pavlov, Valery N.; Khokhlov, Alexandr A.; Stepanov, Ivan A.; Anfimov, Alexandr F.; Ardentov, Vasily V.; Burmakin, Viktor M.; Ignatov, Viktor A.; Rokhlin, Eduard A.; and Zhitkov, Vladimir V., 4,374,680, Cl. 148-2.000.

Goeckel, Ulrich: *See—*
Eckert, Guenter; Wuertele, Lothar; Petersen, Harro; Goeckel, Ulrich; and Fischer, Kurt, 4,374,872, Cl. 427-338.000.

Goldberg, Ernest; Trembly, Gray C.; and Zarr, William A., to Raytheon Company. Antipersonnel mine. 4,374,492, Cl. 102-220.000.

Goller, Glen J.: *See—*
Breault, Richard D.; and Goller, Glen J., 4,374,906, Cl. 429-44.000.

Goncher, Gary M.: *See—*
Lelental, Mark; and Goncher, Gary M., 4,374,916, Cl. 430-31.000.

Gonzales, William H., to Gulf Oil Corporation. Process for treatment of olefin polymer fibrils. 4,374,788, Cl. 264-5.000.

Goodhue, Charles T.: *See—*
Snoke, Roy E.; and Goodhue, Charles T., 4,374,930, Cl. 435-190.000.

Goodman, Lawrence A., to RCA Corporation. Method for manufacturing a vertical, grooved MOSFET. 4,374,455, Cl. 29-571.000.

Goodyear Tire & Rubber Company, The: *See—*
Cohn, Alan E., 4,374,461, Cl. 40-2.00R.
Duh, Ben, 4,374,975, Cl. 528-272.000.
Gartland, Robert J., 4,374,800, Cl. 264-522.000.
Hopper, Roger J., 4,374,732, Cl. 210-690.000.
Massey, Fred L.; and Callander, Douglas D., 4,374,949, Cl. 524-720.000.
Sandstrom, Paul H., 4,374,941, Cl. 523-206.000.
Watts, George T., 4,374,535, Cl. 152-381.600.

Gorczyca, Thomas B.: *See—*
Bolon, Donald A.; and Gorczyca, Thomas B., 4,374,972, Cl. 528-185.000.

Gorog, Istvan; and Lurie, Michael J., to RCA Corporation. Multi-bandwidth optical playback apparatus with elongated read spot. 4,375,096, Cl. 369-102.000.

Gorynin, Igor V.: *See—*
Azbukin, Vladimir G.; Balandin, Jury F.; Gorynin, Igor V.; Gluskin, Lev Y.; Zvezdin, Jury I.; Ignatenko, Alexandr G.; Krasnov, Alexandr N.; Melekhov, Rostislav K.; Osipova, Inna S.; Pavlov, Valery N.; Khokhlov, Alexandr A.; Stepanov, Ivan A.; Anfimov, Alexandr F.; Ardentov, Vasily V.; Burmakin, Viktor M.; Ignatov, Viktor A.; Rokhlin, Eduard A.; and Zhitkov, Vladimir V., 4,374,680, Cl. 148-2.000.

Grabhoefer, Herbert: *See—*
Decker, Walter; Schoen, Ernst; Grabhoefer, Herbert; and Weyland, Peter, 4,374,935, Cl. 521-173.000.

Grand Chavin, Paul, to Timex Corporation. Stepping motor drive circuit for bi-directional rotation. 4,375,049, Cl. 318-696.000.

Gray, Thomas J., to Olin Corporation. Cathode for chlor-alkali cells. 4,374,712, Cl. 204-98.000.

Great Lakes Communication Co. of Michigan: *See—*
Horak, Allen C., 4,375,014, Cl. 179-16.0EA.

Greskovich, Charles D.: *See—*
Prochazka, Svante; and Greskovich, Charles D., 4,374,792, Cl. 264-65.000.

Grise, Gary D.; Hsieh, Ning; Kalter, Howard L.; and Lam, Chung H., to International Business Machines Corporation. Dense electrically alterable read only memory. 4,375,085, Cl. 365-104.000.

Grodzka, Philomena; McCormick, Paul O.; and Fletcher, James W., to Lockheed Missiles & Space Company, Inc. Humidity controller. 4,374,655, Cl. 55-163.000.

Groeger, Theodore O. Tetrahedral windmill. 4,375,035, Cl. 290-55.000.

Grosbois, Jean: *See—*
Arsac, Andre; Ducarre, Michel; Grosbois, Jean; and Nener, Thomas, 4,374,893, Cl. 428-263.000.

Grossmann, Frederic; and Sims, Larry A., to American Hospital Supply Corporation. System and method for bandaging a patient. 4,374,520, Cl. 128-132.00D.

Gruenfeld, Norbert, to Ciba-Geigy Corporation. 1-Carboxyalkanoylindoline-2-carboxylic acids. 4,374,847, Cl. 424-274.000.

Grunau, Dietrich. Cable connector. 4,375,011, Cl. 174-65.0SS.

GTE Automatic Electric Labs Inc.: *See—*
Thoma, Donald E., 4,375,078, Cl. 364-200.000.

GTE Laboratories Incorporated: *See—*
Chagnon, Mark S.; Lester, Joseph E.; and Natansohn, Samuel, 4,374,809, Cl. 423-54.000.
Natansohn, Samuel; and Czupryna, Gary, 4,374,713, Cl. 204-109.000.
Palilla, Frank C.; Gaudet, Gary G.; and Baglio, Joseph A., 4,374,819, Cl. 423-570.000.

GTE Products Corporation: *See—*
Faria, Sixdeniel, 4,374,917, Cl. 430-94.000.

Guenter, Thomas E., to Du Pont de Nemours, E. I., and Company. Manufacture of H_2O_2. 4,374,820, Cl. 423-588.000.

Gulf Oil Corporation: *See—*
Gonzales, William H., 4,374,788, Cl. 264-5.000.

Gupta, Amitava; Ingham, John D.; and Yavrouian, Andre H., to California Institute of Technology. N-Butyl acrylate polymer composition for solar cell encapsulation and method. 4,374,955, Cl. 525-281.000.

Gurries, Raymond A.; and Stormon, Harry J. Pavement cutter. 4,374,602, Cl. 299-37.000.

Guscott, John K., to American District Telegraph Company. Passive infrared intrusion detection system. 4,375,034, Cl. 250-342.000.

Hagiwara, Toshihiko, to Olympus Optical Co., Ltd. Endoscope type high frequency surgical apparatus. 4,374,517, Cl. 128-6.000.

Hagiya, Akio: *See—*
Kikuchi, Akira; Hagiya, Akio; Shinkai, Kazuteru; Kohno, Masaru; and Saito, Kiyoshi, 4,374,477, Cl. 73-861.180.

Halcon SD Group, Inc., The: *See—*
Khoobiar, Sargis, 4,374,757, Cl. 252-437.000.
Khoobiar, Sargis, 4,374,759, Cl. 252-455.00R.

Hall, Douglas J. M.: *See—*
Bekker, Marthinus J.; and Hall, Douglas J. M., 4,374,484, Cl. 89-14.00C.

Halliburton Company: *See—*
Barrington, Burchus Q., 4,374,583, Cl. 251-324.000.
Cain, David E., 4,374,474, Cl. 73-433.000.
McLaughlin, Homer C.; and Weaver, Jimmie D., 4,374,739, Cl. 252-8.55R.
McLaughlin, Homer C., 4,374,968, Cl. 528-54.000.

Halvorsen, Eric J.; and Cornaby, David T., to Iomega Corporation. Programmable format sequencer for disk drive. 4,375,069, Cl. 360-49.000.

Hambling, Robert E.: *See—*
Hilditch, Edward A.; Hambling, Robert E.; Sparks, Colin R.; and Walker, David A., 4,374,852, Cl. 424-289.000.

Hamburger Stahlwerke GmbH: *See—*
Papst, Gero; Ropke, Gunther; and Topfer, Hans J., 4,374,585, Cl. 266-81.000.

Hamilton, Stephen R., to Eaton Corporation. Heat recoverable connector. 4,374,881, Cl. 428-36.000.

Hammershaimb, Harold U.: *See—*
Vickers, Anthony G.; Hammershaimb, Harold U.; and Hemler, Charles L., Jr., 4,374,750, Cl. 252-417.000.

Hamon, Burrell N.: *See—*
Baucom, Keith B.; and Hamon, Burrell N., 4,374,715, Cl. 204-158.00R.

Haneishi, Tatsuo: *See—*
Arai, Mamoru; Haneishi, Tatsuo; and Nakajima, Mutsuo, 4,374,764, Cl. 260-112.50R.

Hanft, Roy F.; and Pechanek, Gerald G., to International Business Machines Corporation. Text recorder with automatic word ending. 4,374,625, Cl. 400-98.000.

Hanley, Gerard L.: *See—*
Viola, Raymond D.; and Hanley, Gerard L., 4,375,053, Cl. 333-116.000.

Hanna, Daniel C. Vehicle conveyor. 4,374,496, Cl. 104-172.00B.

Hannon, Martin J.: *See—*
Roberts, Donald R.; Kritchevsky, Gina R.; and Hannon, Martin J., 4,374,879, Cl. 428-35.000.

Hara, Akio; and Yazu, Shuji, to Sumitomo Electric Industry, Ltd. Composite diamond compact for a wire drawing die and a process for the production of the same. 4,374,900, Cl. 428-551.000.

Hara, Yoshio; and Hashimoto, Yoshiaki, to Mitsubishi Steel Mfg. Co., Ltd.; and Nippon Steel Corporation. Roll having low volume resistivity for electroplating. 4,374,721, Cl. 204-293.000.

Harada, Hidefumi: *See—*
Senda, Jihei; Inoue, Yoshihiro; Uenishi, Toshiaki; Harada, Hidefumi; Nakata, Kouji; Akagi, Akio; and Yamasaki, Takanori, 4,374,676, Cl. 106-303.000.
Senda, Jihei; Inoue, Yoshihiro; Uenishi, Toshiaki; Harada, Hidefumi; Nakata, Kouji; and Akagi, Akio, 4,374,677, Cl. 106-309.000.

Harada, Mas, to Qualitone Hearing Aids Inc. Vented ear tip for hearing aid and adapter coupler therefore. 4,375,016, Cl. 179-182.00R.

Harder, Wolfgang: *See—*
Merger, Franz; Towae, Friedrich; and Harder, Wolfgang, 4,375,000, Cl. 560-25.000.

Harel, Zvi: *See—*
Litman, David J.; Harel, Zvi; and Ullman, Edwin F., 4,374,925, Cl. 435-7.000.

Harju, Philip H.; and Pasek, Eugene A., to Koppers Company, Inc. Vanadium-hydrogen-phosphorus-oxygen catalytic material. 4,374,756, Cl. 252-435.000.

Harlan, George M., to Union Carbide Corporation. Compositions comprising low pressure ethylene polymers and alkylene-alkyl acrylate copolymers; and spiral wound hose products fabricated therefrom. 4,374,882, Cl. 428-36.000.

Harmand, Pierre. Leveling table. 4,374,497, Cl. 108-4.000.

Harris Corporation: *See—*
Waters, George W.; and Luntz, Michael B., 4,375,099, Cl. 371-6.000.

Harris, Elbert E.; Patchett, Arthur A.; Tristram, Edward W.; and Wyvratt, Matthew J., to Merck & Co., Inc. Aminoacid derivatives as antihypertensives. 4,374,829, Cl. 424-177.000.

Harris, Paul J.: *See—*
Allcock, Harry R.; and Harris, Paul J., 4,374,781, Cl. 260-543.0PN.
Phillips, Kenneth G.; and Harris, Paul J., 4,374,964, Cl. 525-540.000.

Harrison, William H. Planar disc magnetic electrode. 4,374,516, Cl. 128-1.300.

Hart, Robert J. Apparatus for the continuous manufacture of finely divided metals, particularly magnesium. 4,374,633, Cl. 425-7.000.

Hartley, Phillip A., to International Business Machines Corporation. Photo method of making tri-level density photomask. 4,374,911, Cl. 430-5.000.

Hartsough, Lloyd B.: *See—*
Bolich, Raymond E., Jr.; Hartsough, Lloyd B.; and Cothran, Philip E., 4,374,825, Cl. 424-70.000.

Harvey, Douglas J., to General Motors Corporation. Tin-base body solder. 4,374,904, Cl. 428-648.000.

Harvey, Kenneth; and Hayes, Harry, to Colgate-Palmolive Company. Dental composition. 4,374,823, Cl. 424-52.000.

Hashimoto, Yoshiaki: *See—*
Hara, Yoshio; and Hashimoto, Yoshiaki, 4,374,721, Cl. 204-293.000.

Hatakeyama, Yoshiharu: *See—*
Ogasawara, Hirotake; Hatakeyama, Yoshiharu; and Ishiguro, Mitsuo, 4,374,796, Cl. 264-101.000.

Hay, Allan S., to General Electric Company. Method for making polyformals and polyformal products made thereby. 4,374,974, Cl. 528-219.000.

Hayakawa, Hiroshi: *See—*
Abe, Mitsunobu; Yoshida, Ikushi; Matsuo, Munetsugu; and Hayakawa, Hiroshi, 4,374,682, Cl. 148-12.00C.

Hayakawa, Masatoshi; and Sakazaki, Yoshitami, to CKD Corporation. Apparatus for welding base pins of fluorescent lamp. 4,375,024, Cl. 219-56.000.

Hayashi, Masaki: *See—*
Tanouchi, Tadao; Kawamura, Masanori; and Hayashi, Masaki, 4,374,845, Cl. 424-273.00R.

Hayashi, Takao; Kato, Hajime; Miyamoto, Akio; and Yoshida, Makoto. Color developer, recording unit having a layer of the color developer and process for production thereof. 4,374,671, Cl. 106-21.000.

Hayashi, Yukichi: *See—*
Sugimoto, Osamu; Akagawa, Masaki; and Hayashi, Yukichi, 4,374,557, Cl. 194-100.00A.

Hayashi, Yutaka: *See—*
Koike, Masao; Hayashi, Yutaka; and Ogaya, Masayoshi, 4,374,683, Cl. 148-12.0EA.

Hayes, Edward O., to National Research Development, Inc. Process of making an improved combustible gel and product. 4,374,646, Cl. 44-7.00D.

Hayes, Harry: *See—*
Harvey, Kenneth; and Hayes, Harry, 4,374,823, Cl. 424-52.000.

Hayes, Thomas E., to Johnson Controls, Inc. Furnace draft control system with electronic loss-of-draft timer. 4,374,569, Cl. 236-1.00G.

Hazen, George G.; Volante, Ralph P.; and Wilson, Kenneth E., to Merck & Co., Inc. Process for the preparation of N-formimidoyl thienamycin and reagents therefor. 4,374,772, Cl. 260-245.20T.

Heck, James V.: *See—*
Christensen, Burton G.; Heck, James V.; and Szymonifka, Michael J., 4,374,848, Cl. 424-274.000.
Christensen, Burton G.; and Heck, James V., 4,374,849, Cl. 424-274.000.

Hein, Richard D.; and Fleshood, William L., to General Tire & Rubber Company, The. Expansion joint sealing assembly for curb and roadway intersections. 4,374,442, Cl. 14-16.500.

Heinemann, Henning; Ohlendorf, Heinrich-Wilhelm; and Wolf, Klaus-Ulrich, to Kali-Chemie Pharma GmbH. N-Amino alkyl indole compounds compositions containing same, and a method of using same in therapy of disorders of gastrointestinal motility. 4,374,846, Cl. 424-274.000.

Heinzl, Alfred; and Stadler, Heinz, to Siemens Aktiengesellschaft. Multiple casting head. 4,374,531, Cl. 141-82.000.

Hekal, Ihab M., to Continental Packaging Company, Inc. Process for the preservation of color and flavor in liquid containing comestibles. 4,374,714, Cl. 204-131.000.

Held, Franz: *See—*
Lerch, Rolf; and Held, Franz, 4,374,575, Cl. 242-56.500.

Helgerson, Ronald C. Portable automatic multiple test system for multi-pair cables. 4,375,050, Cl. 324-51.000.

Hemler, Charles L., Jr.: *See—*
Vickers, Anthony G.; Hammershaimb, Harold U.; and Hemler, Charles L., Jr., 4,374,750, Cl. 252-417.000.

Hemmer, Valentine J.; Piscitelli, R. Amelia; Fischer, Charles P.; and Washburn, James C., to Bendix Corporation, The. Contact for an electrical connector. 4,374,604, Cl. 339-59.00R.

Henkel Corporation, The: *See—*
Bhatia, Yog R., 4,374,940, Cl. 523-176.000.

Henkel Kommanditgesellschaft auf Aktien: *See—*
Struve, Alfred; Hill, Frank F.; and Schindler, Joachim, 4,374,776, Cl. 260-397.250.

Hennemann, Jean: *See—*
Daussin, Bernard; and Hennemann, Jean, 4,375,022, Cl. 200-148.00R.

Henry, Ronald A.; and Adicoff, Arnold, to United States of America, Navy. Synthesis of hydrocarbon soluble vanadium catalyst. 4,374,777, Cl. 260-414.000.

Hercules Incorporated: *See—*
Aldrich, Paul H., 4,374,673, Cl. 106-212.000.

Herd, Richard D., to Recognition Equipment Incorporated. IJP Drop modulator. 4,375,066, Cl. 346-140.00R.

Herz, Claus: *See—*
Eichler, Jurgen; Herz, Claus; Neisius, Karl-Heinz; and Wehner, Gregor, 4,374,984, Cl. 544-80.000.

Hess, Klaus: *See—*
Braha, Alexandru; Daucher, Hans; Hess, Klaus; Kroetzsch, Peter; Merkel, Helmut; Roedl, Roland; Schwaegerl, Walter; and Stickel, Richard, 4,374,730, Cl. 210-608.000.

Hestich, John, to Dwyer Instruments, Inc. Differential pressure gauge. 4,374,475, Cl. 73-736.000.

Hewlett-Packard Company: *See—*
Fearnside, James T.; and Stephens, Thomas P., 4,375,009, Cl. 174-36.000.

Hewlett-Packard GmbH: *See—*
Schrenker, Helge; and Hupe, Peter, 4,374,656, Cl. 55-170.000.

Heymes, Rene; and Lutz, Andre, to Uclaf, Roussel. Novel compounds. 4,374,834, Cl. 424-246.000.

Heyneman, Guido, to Siemens Aktiengesellschaft. Compressed air-actuated valve means. 4,374,582, Cl. 251-62.000.

Hilditch, Edward A.; Hambling, Robert E.; Sparks, Colin R.; and Walker, David A., to Cuprinol Limited. Anti-fungal compositions employing metal salts of carboxylic acids. 4,374,852, Cl. 424-289.000.

Hill, Frank F.: *See—*
Struve, Alfred; Hill, Frank F.; and Schindler, Joachim, 4,374,776, Cl. 260-397.250.

Hillen, Douglas A.: *See—*
Jespers, Victor H.; and Hillen, Douglas A., 4,374,534, Cl. 150-52.00R.

Hines, Stephen P., to Eastman Kodak Company. Compact X-Y positioning mechanism for microfiche. 4,374,611, Cl. 353-27.00R.

Hinkley, Carl O.: *See—*
Taylor, Chester J.; and Hinkley, Carl O., 4,374,601, Cl. 296-63.000.

Hino, Naganori: *See—*
Konishi, Hiroyuki; Hino, Naganori; Matsumoto, Hiroshi; and Yoshida, Ryo, 4,374,662, Cl. 71-103.000.

Hino, Seigo: *See—*
Kawabata, Takakazu; and Hino, Seigo, 4,374,509, Cl. 123-146.50A.

Hirai, Kentaro; Matsutani, Shigeru; Makino, Itsuo; and Ishiba, Teruyuki, to Shionogi & Co., Ltd. 4,1-Benzoxazepines and compositions. 4,374,842, Cl. 424-269.000.

Hirano, Shigeo; Sugimoto, Tadao; and Tsujino, Nobuyuki, to Fuji Photo Film Co., Ltd. Direct positive silver halide photographic light-sensitive material. 4,374,923, Cl. 430-410.000.

Hirota, Kazuo: *See—*
Tomioka, Kentaro; Hirota, Kazuo; Muramatsu, Hiroaki; and Akahane, Shoji, 4,374,936, Cl. 523-116.000.

Hirvela, George T. Scent dispenser. 4,374,571, Cl. 239-36.000.

Hissel, Leopold H.: *See—*
de Haan, Maarten R.; Compaan, Klaas; and Hissel, Leopold H., 4,375,088, Cl. 365-234.000.

Hitachi, Ltd.: *See—*
Ikushima, Ichiro, 4,375,037, Cl. 307-268.000.
Saito, Cyuichi, 4,374,558, Cl. 198-333.000.

Hoberman, Max. Temperature control system for conserving energy. 4,374,541, Cl. 165-26.000.
Hoechst Aktiengesellschaft: *See—*
  Fischer, Edgar; Brandrup, Johannes; and Weinlich, Jurgen, 4,374,966, Cl. 526-62.000.
  Rieck, Hans-Peter, 4,374,818, Cl. 423-388.000.
  Weber, Rolf-Ortwin; Soder, Alfons; and Boksay, Istvan, 4,374,990, Cl. 544-376.000.
Hoff, Raymond E.: *See—*
  Pullukat, Thomas J.; and Hoff, Raymond E., 4,374,753, Cl. 252-429.00B.
Hoffing, Lawrence B. System for model rocket construction. 4,374,493, Cl. 102-348.000.
Hoffman, Kenneth: *See—*
  Zwick, Eugene B.; Nguyen, Dung D.; Brigham, William D.; and Hoffman, Kenneth, 4,374,637, Cl. 431-183.000.
Hoffmann-La Roche Inc.: *See—*
  Branca, Quirico; Fischli, Albert E.; and Szente, Andre, 4,374,773, Cl. 260-245.500.
  Brot, Nathan; and Weissbach, Herbert, 4,374,928, Cl. 435-68.000.
  Dotz, Karl H., 4,374,775, Cl. 260-396.00K.
Hofirek, Zdenek: *See—*
  Weir, Donald R.; Kerfoot, Derek G. E.; and Hofirek, Zdenek, 4,374,808, Cl. 423-42.000.
Hofmann, Klaus: *See—*
  Tappe, Horst; Mayer, Hans; and Hofmann, Klaus, 4,374,640, Cl. 8-526.000.
Holmes, John R., to Discovision Associates. Apparatus for producing centrally apertured record discs. 4,374,636, Cl. 425-589.000.
Holmes, Timothy L.: *See—*
  Chen, Gilbert K.; and Holmes, Timothy L., 4,374,813, Cl. 423-242.000.
Holterbosch, Johan L. M., to Magnetrol International. Oscillating level indicator. 4,375,020, Cl. 200-61.210.
Holubka, Joseph W.: *See—*
  Dickie, Ray A.; and Holubka, Joseph W., 4,374,965, Cl. 525-510.000.
Holvoet, Gerard; and Legrand, Jacques, to Socapex. Device for articulating a moving blade pivoting on its base and a switch which comprises such a device. 4,375,055, Cl. 335-56.000.
Honeywell Information Systems Inc.: *See—*
  Miller, Robert C.; and O'Keefe, David B., 4,375,036, Cl. 307-247.00A.
Hong, Charles A.; and Brabbs, William J., to Procter & Gamble Company, The. Doughs and cookies providing storage-stable texture variability. 4,374,862, Cl. 426-94.000.
Hooker, Robert W., to International Business Machines Corporation. Erasing typewriter with automatic/manual selection. 4,374,626, Cl. 400-697.100.
Hopper, Roger J., to Goodyear Tire & Rubber Company, The. Resins for removal of organo-sulfur compounds from organic or aqueous media. 4,374,732, Cl. 210-690.000.
Horak, Allen C., to Great Lakes Communication Co. of Michigan. Current sensing trigger for a telephone system. 4,375,014, Cl. 179-16.0EA.
Horino, Shigeo: *See—*
  Omura, Hideo; and Horino, Shigeo, 4,374,463, Cl. 53-54.000.
Hornle, Reinhold: *See—*
  Brandt, Horst; Hornle, Reinhold; Buchele, Richard; and Wiegner, Dieter, 4,374,642, Cl. 8-639.000.
Horton, John D., to Sonoco Products Company. Composite container with compressed body wall portion. 4,374,568, Cl. 229-5.500.
Horton Manufacturing Co., Inc.: *See—*
  Dayen, Leonid, 4,374,552, Cl. 188-72.900.
Horyu, Sakae, to Canon Kabushiki Kaisha. Electronic apparatus having special key. 4,375,060, Cl. 340-365.00R.
Hosoda, Yuuichi: *See—*
  Ikeda, Hisashi; and Hosoda, Yuuichi, 4,374,885, Cl. 428-160.000.
Howard, Thomas W., to International Business Machines Corporation. Microfilm camera having a moving lens. 4,374,618, Cl. 355-50.000.
Howlett, Robert J., to Container Corporation of America. Collapsible display bin stand. 4,374,560, Cl. 206-44.00R.
Hozumi, Shiro: *See—*
  Takeshita, Isao; and Hozumi, Shiro, 4,374,468, Cl. 62-333.000.
Hsia, Jen C., to Canada, Her Majesty the Queen in right of, as represented by the Minister of National Defence. Method of inhibiting L-tryptophan to serum albumin binding. 4,374,857, Cl. 424-317.000.
Hsieh, Ning: *See—*
  Grise, Gary D.; Hsieh, Ning; Kalter, Howard L.; and Lam, Chung H., 4,375,085, Cl. 365-104.000.
Hsieh, Shane: *See—*
  Wanat, Stanley F.; and Hsieh, Shane, 4,374,920, Cl. 430-331.000.
Hu, Yaw Wen: *See—*
  Ahlquist, C. Norman; Hu, Yaw Wen; Schoen, Peter F.; and Poenisch, Paul A., 4,374,915, Cl. 430-22.000.
Hudek, Amanda, Gerd Hudek, Kurt Hudek, heirs: *See—*
  Hudek, Karl, deceased; and Kusserow, Bernd, 4,374,524, Cl. 128-420.00A.
Hudek, Karl, deceased (by Hudek, Amanda, Gerd Hudek, Kurt Hudek, heirs); and Kusserow, Bernd, to Siemens Aktiengesellschaft. Electromedical apparatus for interference current treatment. 4,374,524, Cl. 128-420.00A.
Hufnagel, Willi; Blanc, Maurice; and Balimann, Walter, to Societe D'Assistance Technique pour Produits Nestle S.A. Soluble coffee process. 4,374,864, Cl. 426-594.000.
Hughes Aircraft Company: *See—*
  Wanlass, Frank M., 4,375,087, Cl. 365-218.000.
Hughes Tool Company: *See—*
  Watkins, Bruce J., 4,374,595, Cl. 285-137.00A.
Huneke, James T.: *See—*
  Dorey II, John K.; and Huneke, James T., 4,374,869, Cl. 427-97.000.
Hunt, LaWanda M.; Thompson, Malcolm J.; and Robbins, William E., to United States of America, Agriculture. Method of controlling parasitic ticks. 4,374,850, Cl. 424-274.000.
Hunt, LaWanda M.; Thompson, Malcolm J.; and Robbins, William E., to United States of America, Agriculture. Method of controlling parasitic ticks. 4,374,851, Cl. 424-285.000.
Hupe, Peter: *See—*
  Schrenker, Helge; and Hupe, Peter, 4,374,656, Cl. 55-170.000.
Hurt, Alfred A. Security lock for door. 4,374,599, Cl. 292-270.000.
Hwang, Seong T. O,O-Dialkyl-s-(2,3,4-trichloro)butyl thiophosphate. 4,374,783, Cl. 260-963.000.
Hyatt, John A.; and Kashdan, David S., to Eastman Kodak Company. Process for preparation of aromatic acid chlorides. 4,374,770, Cl. 260-207.100.
Hybrid Energy, Inc.: *See—*
  Briley, Patrick B., 4,374,467, Cl. 62-238.100.
ICI Americas Inc.: *See—*
  Yellin, Tobias O.; and Jones, Derrick F., 4,374,836, Cl. 424-251.000.
Ignatenko, Alexandr G.: *See—*
  Azbukin, Vladimir G.; Balandin, Jury F.; Gorynin, Igor V.; Gluskin, Lev Y.; Zvezdin, Jury I.; Ignatenko, Alexandr G.; Krasnov, Alexandr N.; Melekhov, Rostislav K.; Osipova, Inna S.; Pavlov, Valery N.; Khokhlov, Alexandr A.; Stepanov, Ivan A.; Anfimov, Alexandr F.; Ardentov, Vasily V.; Burmakin, Viktor M.; Ignatov, Viktor A.; Rokhlin, Eduard A.; and Zhitkov, Vladimir V., 4,374,680, Cl. 148-2.000.
Ignatov, Viktor A.: *See—*
  Azbukin, Vladimir G.; Balandin, Jury F.; Gorynin, Igor V.; Gluskin, Lev Y.; Zvezdin, Jury I.; Ignatenko, Alexandr G.; Krasnov, Alexandr N.; Melekhov, Rostislav K.; Osipova, Inna S.; Pavlov, Valery N.; Khokhlov, Alexandr A.; Stepanov, Ivan A.; Anfimov, Alexandr F.; Ardentov, Vasily V.; Burmakin, Viktor M.; Ignatov, Viktor A.; Rokhlin, Eduard A.; and Zhitkov, Vladimir V., 4,374,680, Cl. 148-2.000.
IHC Holland N.V.: *See—*
  Loevendie, Rudolf H., 4,374,504, Cl. 114-37.000.
Ikeda Bussan Co., Ltd.: *See—*
  Ikeda, Hisashi; and Hosoda, Yuuichi, 4,374,885, Cl. 428-160.000.
Ikeda, Eiji; Adachi, Tomohiro; Ito, Yoshihiro; Yamada, Ryozo; Taga, Akio; and Takashima, Shigeo, to Aica Kogyo Co., Ltd. Tops fitted with basins and process for their production. 4,374,695, Cl. 156-293.000.
Ikeda, Hisashi; and Hosoda, Yuuichi, to Ikeda Bussan Co., Ltd. Cushion materials and method of making same. 4,374,885, Cl. 428-160.000.
Ikushima, Ichiro, to Hitachi, Ltd. Receiving circuit. 4,375,037, Cl. 307-268.000.
Imperial Chemical Industries Limited: *See—*
  Nemcek, Jozef; Roberts, Thomas A.; and Sherliker, Francis R., 4,374,937, Cl. 523-116.000.
  Yellin, Tobias O.; and Jones, Derrick F., 4,374,836, Cl. 424-251.000.
Ingham, John D.: *See—*
  Gupta, Amitava; Ingham, John D.; and Yavrouian, Andre H., 4,374,955, Cl. 525-281.000.
Inoue, Hiromichi: *See—*
  Inukai, Takashi; Sato, Hideo; Inoue, Hiromichi; and Fukui, Masahiro, 4,374,748, Cl. 252-299.660.
Inoue, Yoshihiro: *See—*
  Senda, Jihei; Inoue, Yoshihiro; Uenishi, Toshiaki; Harada, Hidefumi; Nakata, Kouji; Akagi, Akio; and Yamasaki, Takanori, 4,374,676, Cl. 106-303.000.
  Senda, Jihei; Inoue, Yoshihiro; Uenishi, Toshiaki; Harada, Hidefumi; Nakata, Kouji; and Akagi, Akio, 4,374,677, Cl. 106-309.000.
Institut Francais du Petrole: *See—*
  Nguyen, Jean-Paul; Laval, Emmanuel; and Cendre, Andre, 4,374,547, Cl. 175-45.000.
Intel Corporation: *See—*
  Ahlquist, C. Norman; Hu, Yaw Wen; Schoen, Peter F.; and Poenisch, Paul A., 4,374,915, Cl. 430-22.000.
International Business Machines Corp.: *See—*
  Arneth, August P.; and Foshee, Curtis L., 4,375,103, Cl. 375-109.000.
  Grise, Gary D.; Hsieh, Ning; Kalter, Howard L.; and Lam, Chung H., 4,375,085, Cl. 365-104.000.
  Hanft, Roy F.; and Pechanek, Gerald G., 4,374,625, Cl. 400-98.000.
  Hartley, Phillip A., 4,374,911, Cl. 430-5.000.
  Hooker, Robert W., 4,374,626, Cl. 400-697.100.
  Howard, Thomas W., 4,374,618, Cl. 355-50.000.
  Lamos, Richard A.; and Rosati, Alfonso A., 4,374,586, Cl. 271-37.000.
  Rice, Anthony J., 4,375,072, Cl. 361-87.000.
  Ricketts, Martin W.; and Stubbens, Neil A., 4,375,079, Cl. 364-518.000.
  Schlig, Eugene S., 4,375,059, Cl. 340-347.0AD.
  Sturm, Gary V., 4,375,062, Cl. 346-75.000.
International Flavors & Fragrances Inc.: *See—*
  Boden, Richard M., 4,374,99[illegible], Cl. 549-430.000.
  Boden, Richard M., 4,375,005, Cl. 568-878.000.

  Kiwala, Jacob; Tokarzewski, Richard J.; Schmitt, Frederick L.; and Sprecker, Mark A., 4,374,746, Cl. 252-174.110.
  Sprecker, Mark A., 4,375,004, Cl. 568-665.000.
International Harvester Co.: *See—*
  Westerfield, Lawerence D., 4,374,500, Cl. 111-85.000.
International Standard Electric Corporation: *See—*
  Blahna, Nadezda; and Fischer, Bruno, 4,374,866, Cl. 427-10.000.
International Telephone and Telegraph Corporation: *See—*
  Turbak, Albin F.; Snyder, Fred W.; and Sandberg, Karen R., 4,374,702, Cl. 162-100.000.
Intrater, Josef; and Bertoldo, Gene, to Advanced Technology, Inc. Metal coatings or metal sandwiches with boron nitride or titanium diboride substrates. 4,374,903, Cl. 428-627.000.
Inukai, Takashi; Sato, Hideo; Inoue, Hiromichi; and Fukui, Masahiro, to Chisso Corporation. 4'-(β-Alkyloxyethoxy)-4-cyanobiphenyl. 4,374,748, Cl. 252-299.660.
Iomega Corporation: *See—*
  Halvorsen, Eric J.; and Cornaby, David T., 4,375,069, Cl. 360-49.000.
Ionics, Incorporated: *See—*
  MacDonald, Russell J., 4,374,720, Cl. 204-252.000.
Isaacson, E. Arnold. Gem ring with interchangeable settings. 4,374,470, Cl. 63-29.00R.
Ishiba, Teruyuki: *See—*
  Hirai, Kentaro; Matsutani, Shigeru; Makino, Itsuo; and Ishiba, Teruyuki, 4,374,842, Cl. 424-269.000.
Ishida, Hiroshi: *See—*
  Sasaki, Koichi; Ishida, Hiroshi; Sumida, Yasuji; and Tanaka, Akira, 4,374,616, Cl. 355-3.0CH.
Ishiguro, Mitsuo: *See—*
  Ogasawara, Hirotake; Hatakeyama, Yoshiharu; and Ishiguro, Mitsuo, 4,374,796, Cl. 264-101.000.
Ishimi, Hiroshi; Shimauchi, Hisaaki; and Tanaka, Chuzaburo, to Sumitomo Metal Mining Company Ltd. Method for recovering aluminum fluoride from fluorine-containing aqueous aluminum nitrate solutions. 4,374,807, Cl. 423-11.000.
Isokinetic Sales Co.: *See—*
  Ruggles, Roger, 4,374,588, Cl. 272-132.000.
Isozaki, Shin; Sasaki, Masaru; and Sakurai, Kanji, to Mitsubishi Denki Kabushiki Kaisha. Magnetic head soft loading and unloading device. 4,375,070, Cl. 360-75.000.
Ito, Yoshihiro: *See—*
  Ikeda, Eiji; Adachi, Tomohiro; Ito, Yoshihiro; Yamada, Ryozo; Taga, Akio; and Takashima, Shigeo, 4,374,695, Cl. 156-293.000.
ITT Industries, Inc.: *See—*
  Birkenbach, Alfred; and Franke, Helmut, 4,374,551, Cl. 188-71.900.
IV. Ker. Epitoipari Szovetkezet: *See—*
  Sumeghy, Gabor, 4,374,692, Cl. 156-244.110.
Iversen, Alfred A., to Medtronic, Inc. Body stimulation lead. 4,374,527, Cl. 128-785.000.
Iwagaki, Masaru: *See—*
  Ohbayashi, Keiji; Miyamoto, Akihiko; Iwagaki, Masaru; and Kajiwara, Makoto, 4,374,922, Cl. 430-383.000.
Jackisch, Philip F., to Ethyl Corporation. Stabilization of dibromostyrene. 4,375,006, Cl. 570-105.000.
Jackson, Philip, to E. Beaudrey & Co. Societe Anonyme. Dual-flow band screen and process for substituting it for a through-flow band screen. 4,374,736, Cl. 210-783.000.
Jacobone, Donato. Coatings for polyolefinic products and products covered by said coatings. 4,374,896, Cl. 428-349.000.
Jacobs, Josephus C.: *See—*
  Bouma, Herman; Bouwhuis, Dominicus G.; Boers, Paulus M.; and Jacobs, Josephus C., 4,375,058, Cl. 340-146.30Z.
Jahn-Held, Wilhelm: *See—*
  Lindorfer, Walter; Schulz, Walther; Wagner, Fritz; and Jahn-Held, Wilhelm, 4,374,735, Cl. 210-772.000.
Jakobsen, Kjell M.; and Nilsson, Claes T., to PLM Aktiebolag. Blank adapted to be blown into a container and providing orientation of the material in the mouth and neck as well as the body. 4,374,878, Cl. 428-35.000.
Jespers, Victor H.; and Hillen, Douglas A. Turbine ventilator cover. 4,374,534, Cl. 150-52.00R.
Jespersen, Aksel; and Eriksen, Peter A., to Danfoss A/S. Programmable time switch. 4,375,048, Cl. 318-484.000.
Jochems, Pieter J. W., to U.S. Philips Corporation. Method of manufacturing a semiconductor device. 4,374,454, Cl. 29-571.000.
John Wyeth and Brother Limited: *See—*
  Crossley, Roger, 4,374,992, Cl. 546-298.000.
Johnson, Colin A.: *See—*
  Warren, Gilbert G.; and Johnson, Colin A., 4,374,450, Cl. 445-7.000.
Johnson Controls, Inc.: *See—*
  Hayes, Thomas E., 4,374,569, Cl. 236-1.00G.
Johnson, David S.: *See—*
  Geary, John; and Johnson, David S., 4,374,592, Cl. 280-476.00R.
Jones, Derrick F.: *See—*
  Yellin, Tobias O.; and Jones, Derrick F., 4,374,836, Cl. 424-251.000.
Jones, Peter H.: *See—*
  Pitzele, Barnett S.; and Jones, Peter H., 4,374,932, Cl. 521-32.000.
Jordan, John W.: *See—*
  Van Fisk, James, Jr.; and Jordan, John W., 4,374,939, Cl. 523-139.000.
Josef Schlemmer GmbH: *See—*
  Schlemmer, Josef; and Konig, Adolf, 4,374,596, Cl. 285-305.000.
Joseph, Joseph P.; and Bernstein, Seymour, to American Cyanamid Company. Modulators of the complement system comprising bis-glucopyranosyl arylene sulfate derivatives. 4,374,831, Cl. 424-180.000.
Joseph, Joseph P.; and Bernstein, Seymour, to American Cyanamid Company. Modulators of the complement system comprising polyhexaose arylene sulfate derivatives. 4,374,832, Cl. 424-180.000.
Kabushiki Kaisha Nippon Coinco: *See—*
  Kobayashi, Osamu; and Tanaka, Masanori, 4,374,529, Cl. 133-4.00A.
  Sugimoto, Osamu; Akagawa, Masaki; and Hayashi, Yukichi, 4,374,557, Cl. 194-100.00A.
Kabushiki-Kaisha Tokai-Rika-Denki-Seisakusho: *See—*
  Kawaharazaki, Takashi, 4,374,594, Cl. 280-801.000.
Kachur, Michal: *See—*
  Wilson, George L., 4,374,445, Cl. 15-210.00B.
Kajita, Shuji: *See—*
  Fujiwara, Takashi; Kajita, Shuji; Matsushita, Tetsuo; and Manabe, Seiichi, 4,374,977, Cl. 528-348.000.
  Fujiwara, Takashi; Kajita, Shuji; Matsushita, Tetsuo; and Manabe, Seiichi, 4,374,978, Cl. 528-348.000.
Kajiwara, Makoto: *See—*
  Ohbayashi, Keiji; Miyamoto, Akihiko; Iwagaki, Masaru; and Kajiwara, Makoto, 4,374,922, Cl. 430-383.000.
Kali-Chemie Pharma GmbH: *See—*
  Heinemann, Henning; Ohlendorf, Heinrich-Wilhelm; and Wolf, Klaus-Ulrich, 4,374,846, Cl. 424-274.000.
Kalishman, Calvin. Air and moisture induction system. 4,374,784, Cl. 261-18.00A.
Kalivretenos, Chris A.: *See—*
  Brown, Michael A.; and Kalivretenos, Chris A., 4,374,577, Cl. 244-3.210.
Kalter, Hendrikus: *See—*
  Sanders, Jozef A. M.; Sanders, Franciscus H. M.; Kalter, Hendrikus; and van de Ven, Everhardus P. G. T., 4,374,698, Cl. 156-643.000.
Kalter, Howard L.: *See—*
  Grise, Gary D.; Hsieh, Ning; Kalter, Howard L.; and Lam, Chung H., 4,375,085, Cl. 365-104.000.
Kaneki, Satoru; Kikuchi, Yuzi; and Sasaki, Yoji, to Dai Nippon Insatsu Kabushiki Kaisha. Photomask and photomask blank. 4,374,912, Cl. 430-5.000.
Kaneko, Yujiro; and Fujisaki, Hiroshi, to Fuji Photo Film Co., Ltd. Method and device for measuring a degree of exhaustion of photographic processing solutions. 4,375,031, Cl. 235-64.700.
Kanoff, George, to AMP Incorporated. Ignition system for an electrical connector. 4,374;483, Cl. 89-1.00B.
Karapita, Alexander D. Support unit. 4,374,581, Cl. 248-337.000.
Karger, Robert; and Dungs, Horst, to Carl Still GmbH and Co. KG, Firma. Method for cooling and separating chlorides and fluorides from ammoniacal gas. 4,374,811, Cl. 423-240.000.
Kasai, Masaji; Kono, Motomichi; and Shirahata, Kunikatsu, to Kyowa Hakko Kogyo Co., Ltd. Mitomycins. 4,374,774, Cl. 548-422.000.
Kashdan, David S.: *See—*
  Hyatt, John A.; and Kashdan, David S., 4,374,770, Cl. 260-207.100.
Kashio, Toshio, to Casio Computer Co., Ltd. Digital alarm timepiece with setting pointer. 4,374,622, Cl. 368-74.000.
Kathrein, Donald: *See—*
  Blitstein, John; and Kathrein, Donald, 4,374,874, Cl. 427-379.000.
Kato, Hajime: *See—*
  Hayashi, Takao; Kato, Hajime; Miyamoto, Akio; and Yoshida, Makoto, 4,374,671, Cl. 106-21.000.
Kato, Misao: *See—*
  Tsuji, Shiro; Matsushima, Hiroshi; Shiineki, Yasuharu; Kihara, Nobuyoshi; and Kato, Misao, 4,375,100, Cl. 371-38.000.
Kawabata, Takakazu; and Hino, Seigo, to Toyota Jidosha Kogyo Kabushiki Kaisha; and Nippon Denso Company Limited. Fixture device for a distributor. 4,374,509, Cl. 123-146.50A.
Kawaguchi, Yoshihisa. Device for producing a block of solidified carbon dioxide. 4,374,658, Cl. 62-35.000.
Kawaharazaki, Takashi, to Kabushiki-Kaisha Tokai-Rika-Denki-Seisakusho. Emergency buckle device. 4,374,594, Cl. 280-801.000.
Kawamura, Kiyoshi: *See—*
  Shiratsuchi, Masami; Shimizu, Noboru; Shigyo, Hiromichi; Kyotani, Yoshinori; Kunieda, Hisashi; Kawamura, Kiyoshi; Sato, Seiichi; Akashi, Toshihiro; Nagakura, Masahiko; Sawada, Naotoshi; and Uchida, Yasumi, 4,374,840, Cl. 424-263.000.
Kawamura, Masanori: *See—*
  Tanouchi, Tadao; Kawamura, Masanori; and Hayashi, Masaki, 4,374,845, Cl. 424-273.00R.
Kawanabe, Yutaka; and Kishimoto, Takeyoshi, to Mec Co., Ltd. Stripping solution for tin or tin alloys. 4,374,744, Cl. 252-79.400.
Kawase, Takao: *See—*
  Sawai, Kiyoshi; and Kawase, Takao, 4,374,705, Cl. 203-19.000.
Kearney, Frank W., to United States of America, Army. Weld quality monitor. 4,375,026, Cl. 219-130.010.
Keilp, John P.; Moore, Warren F.; and Sirbu, Victor, to Bell Telephone Laboratories, Incorporated. Production of mold charge of elastomeric material containing magnetic oxide filler. 4,374,795, Cl. 264-152.000.
Keizer, Eugene O., to RCA Corporation. Method and apparatus for testing styli. 4,375,095, Cl. 369-55.000.
Kelleher, Kevin C.; and Christopher, Todd J., to RCA Corporation. Apparatus for advancing a video disc pickup transducer beyond a disc record defect. 4,375,094, Cl. 369-43.000.
Kelley, Jack R., to Georgia-Pacific Corporation. Drilling fluid composition. 4,374,738, Cl. 252-8.50C.

Kemp, David T., to National Research Development Corporation. Hearing faculty testing and apparatus therefor. 4,374,526, Cl. 128-746.000.
Kerfoot, Derek G. E.: *See—*
  Weir, Donald R.; Kerfoot, Derek G. E.; and Hofirek, Zdenek, 4,374,808, Cl. 423-42.000.
Kerko, David J.: *See—*
  Courbin, Philippe; Kerko, David J.; Mazeau, Jean P.; and Morse, David L., 4,374,931, Cl. 501-13.000.
Kesten, Yali: *See—*
  Prevorsek, Dusan C.; DeBona, Bruce T.; and Kesten, Yali, 4,374,973, Cl. 528-191.000.
Ketterer, Stanley J., to Singer Company, The. Chain stitch device for lock stitch sewing machines. 4,374,503, Cl. 112-163.000.
Khokhlov, Alexandr A.: *See—*
  Azbukin, Vladimir G.; Balandin, Jury F.; Gorynin, Igor V.; Gluskin, Lev Y.; Zvezdin, Jury I.; Ignatenko, Alexandr G.; Krasnov, Alexandr N.; Melekhov, Rostislav K.; Osipova, Inna S.; Pavlov, Valery N.; Khokhlov, Alexandr A.; Stepanov, Ivan A.; Anfimov, Alexandr F.; Ardentov, Vasily V.; Burmakin, Viktor M.; Ignatov, Viktor A.; Rokhlin, Eduard A.; and Zhitkov, Vladimir V., 4,374,680, Cl. 148-2.000.
Khoobiar, Sargis, to Halcon SD Group, Inc., The. Catalyst and process for producing methacrylic acid. 4,374,757, Cl. 252-437.000.
Khoobiar, Sargis, to Halcon SD Group, Inc., The. Catalysts and process for unsaturated aldehydes. 4,374,759, Cl. 252-455.00R.
Kihara, Nobuyoshi: *See—*
  Tsuji, Shiro; Matsushima, Hiroshi; Shimeki, Yasuharu; Kihara, Nobuyoshi; and Kato, Misao, 4,375,100, Cl. 371-38.000.
Kikuchi, Akira; Hagiya, Akio; Shinkai, Kazuteru; Kohno, Masaru; and Saito, Kiyoshi, to Fuji Electric Co., Ltd. Ultrasonic measuring device. 4,374,477, Cl. 73-861.180.
Kikuchi, Sho: *See—*
  Ueno, Eishin; and Kikuchi, Sho, 4,374,548, Cl. 180-79.000.
Kikuchi, Yuzi: *See—*
  Kaneki, Satoru; Kikuchi, Yuzi; and Sasaki, Yoji, 4,374,912, Cl. 430-5.000.
Kimberly-Clark Corporation: *See—*
  Bornslaeger, Stephan R., 4,374,888, Cl. 428-198.000.
  Olevsky, Howard, 4,374,522, Cl. 128-285.000.
Kiriyama, Shun-ichi: *See—*
  Kudo, Kazushige; Arai, Yoshihiro; Tsurutani, Ryoichi; and Kiriyama, Shun-ichi, 4,374,961, Cl. 525-439.000.
Kirk Chemicals A/S: *See—*
  Trzecieski, Jan, 4,374,861, Cl. 426-42.000.
Kishimoto, Shinzo: *See—*
  Yokoyama, Shigeki; Kishimoto, Shinzo; Toriya, Itsuki; and Nakamura, Taku, 4,374,924, Cl. 430-528.000.
Kishimoto, Takeyoshi: *See—*
  Kawanabe, Yutaka; and Kishimoto, Takeyoshi, 4,374,744, Cl. 252-79.400.
Kissei Pharmaceutical Co.: *See—*
  Tanouchi, Tadao; Kawamura, Masanori; and Hayashi, Masaki, 4,374,845, Cl. 424-273.00R.
Kitamura, Takashi, to Canon Kabushiki Kaisha. Recording apparatus with laser beam. 4,375,063, Cl. 346-108.000.
Kitamura, Takashi, to Canon Kabushiki Kaisha. Semiconductor laser device having a stabilized output beam. 4,375,067, Cl. 346-160.000.
Kiwala, Jacob; Tokarzewski, Richard J.; Schmitt, Frederick L.; and Sprecker, Mark A., to International Flavors & Fragrances Inc. Cyclohexyl phenethylether derivatives, process for preparing same and uses thereof in combatting tobacco beetles and in augmenting or enhancing the aroma of perfumes, colognes and perfumed articles. 4,374,746, Cl. 252-174.110.
Kleemann, Axel; and Samson, Marc, to Degussa Aktiengesellschaft. Process for the production of tryptophane-hydantoin. 4,374,995, Cl. 548-309.000.
Klein, Harriet S.: *See—*
  Weisrock, William P.; and Klein, Harriet S., 4,374,929, Cl. 435-104.000.
Kniepkamp, Alberto: *See—*
  Moore, Douglas R.; and Kniepkamp, Alberto, 4,374,482, Cl. 84-1.190.
Kobayashi, Osamu; and Tanaka, Masanori, to Kabushiki Kaisha Nippon Coinco. Coin dispensing apparatus. 4,374,529, Cl. 133-4.00A.
Kobayashi, Takashi, to Yamaha Hatsudoki Kabushiki Kaisha. Strut-type steering ski suspension for snowmobiles. 4,374,591, Cl. 280-21.00R.
Kobayashi, Takumi, to Asahi Kogaku Kogyo Kabushiki Kaisha. Mechanism for loading film back in or unloading same from camera body. 4,374,614, Cl. 354-216.000.
Kobuck, Richard M.: *See—*
  Wojcik, Thaddeus A.; Kobuck, Richard M.; and Antol, Ronald F., 4,374,462, Cl. 51-411.000.
Koch Engineering Company, Inc.: *See—*
  Chen, Gilbert K.; and Holmes, Timothy L., 4,374,813, Cl. 423-242.000.
Koga, Kazunori; Nagano, Saburo; Mizuta, Shinichiro; and Nakayama, Masayoshi, to Kyoto Ceramic Kabushiki Kaisha. Method of producing dense sintered silicon carbide body from polycarbosilane. 4,374,793, Cl. 264-65.000.
Koh-I-Noor Rapidograph, Inc.: *See—*
  Neumann, Ruediger, 4,374,565, Cl. 211-69.500.
Kohno, Masaru: *See—*
  Kikuchi, Akira; Hagiya, Akio; Shinkai, Kazuteru; Kohno, Masaru; and Saito, Kiyoshi, 4,374,477, Cl. 73-861.180.
Koike, Masao; Hayashi, Yutaka; and Ogaya, Masayoshi, to Sumitomo Metal Industries, Ltd.; and Nippon Stainless Steel Co., Ltd. Process for manufacturing ferritic stainless steel sheet having good formability, surface appearance and corrosion resistance. 4,374,683, Cl. 148-12.0EA.
Kok, Cornelis J. M. Process for the preparation of a liquid-absorbing and shock-absorbing material. 4,374,794, Cl. 264-122.000.
Kollmorgen Technologies Corporation: *See—*
  Stahl, Fritz; and Steffen, Horst, 4,374,868, Cl. 427-97.000.
Kollross, Gunter: *See—*
  Steinbis, Fritz K., 4,374,871, Cl. 427-236.000.
Komada, Hitoshi. Method of connecting a co-axial cable to a connector. 4,374,458, Cl. 29-857.000.
Komurasaki, Satoshi; Ueda, Atsushi; and Yamane, Tsuneo, to Mitsubishi Denki Kabushiki Kaisha. Ignition timing correcting system for internal combustion engine. 4,374,510, Cl. 123-418.000.
Kondo, Kazuo: *See—*
  Takami, Akio; and Kondo, Kazuo, 4,374,942, Cl. 523-210.000.
Konig, Adolf: *See—*
  Schlemmer, Josef; and Konig, Adolf, 4,374,596, Cl. 285-305.000.
Konishi, Hiroyuki; Hino, Naganori; Matsumoto, Hiroshi; and Yoshida, Ryo, to Sumitomo Chemical Company, Limited. Diphenyl sulfone compounds, and their production and use. 4,374,662, Cl. 71-103.000.
Konishiroku Photo Industry Co., Ltd.: *See—*
  Ohbayashi, Keiji; Miyamoto, Akihiko; Iwagaki, Masaru; and Kajiwara, Makoto, 4,374,922, Cl. 430-383.000.
Kono, Motomichi: *See—*
  Kasai, Masaji; Kono, Motomichi; and Shirahata, Kunikatsu, 4,374,774, Cl. 548-422.000.
Koon, Norman C., to United States of America, Navy. Magnetostrictive devices. 4,374,665, Cl. 75-123.00E.
Koorneef, Jacob, to U.S. Philips Corporation. Apparatus for manufacturing a color display tube. 4,374,452, Cl. 445-66.000.
Koppers Company, Inc.: *See—*
  Harju, Philip H.; and Pasek, Eugene A., 4,374,756, Cl. 252-435.000.
Koschinek, Gunter; and Wandel, Dietmar, to Davy McKee Aktiengesellschaft. Process for the production of high strength yarns by spin-stretching and yarns produced by the process, especially from polyamide-6 and polyester filaments. 4,374,797, Cl. 264-210.300.
Kowa Company, Ltd.: *See—*
  Shiratsuchi, Masami; Shimizu, Noboru; Shigyo, Hiromichi; Kyotani, Yoshinori; Kunieda, Hisashi; Kawamura, Kiyoshi; Sato, Seiichi; Akashi, Toshihiro; Nagakura, Masahiko; Sawada, Naotoshi; and Uchida, Yasumi, 4,374,840, Cl. 424-263.000.
Koyama, Kazuo: *See—*
  Yotsumoto, Toshihiro; and Koyama, Kazuo, 4,374,962, Cl. 525-442.000.
Krasnov, Alexandr N.: *See—*
  Azbukin, Vladimir G.; Balandin, Jury F.; Gorynin, Igor V.; Gluskin, Lev Y.; Zvezdin, Jury I.; Ignatenko, Alexandr G.; Krasnov, Alexandr N.; Melekhov, Rostislav K.; Osipova, Inna S.; Pavlov, Valery N.; Khokhlov, Alexandr A.; Stepanov, Ivan A.; Anfimov, Alexandr F.; Ardentov, Vasily V.; Burmakin, Viktor M.; Ignatov, Viktor A.; Rokhlin, Eduard A.; and Zhitkov, Vladimir V., 4,374,680, Cl. 148-2.000.
Krebs, Peter: *See—*
  Wuthrich, Hans-Rudolf; Speigel, Hubert; Lehner, Hermann; and Krebs, Peter, 4,375,023, Cl. 200-148.00R.
Krell, William C.: *See—*
  Funston, Joseph; Krell, William C.; and Zimmer, Franklin V., 4,374,672, Cl. 106-97.000.
Kritchevsky, Gina R.: *See—*
  Roberts, Donald R.; Kritchevsky, Gina R.; and Hannon, Martin J., 4,374,879, Cl. 428-35.000.
Kroetzsch, Peter: *See—*
  Braha, Alexandru; Daucher, Hans; Hess, Klaus; Kroetzsch, Peter; Merkel, Helmut; Roedl, Roland; Schwaegerl, Walter; and Stickel, Richard, 4,374,730, Cl. 210-608.000.
Kronauge, James F.: *See—*
  Glavan, Kenneth A.; and Kronauge, James F., 4,374,821, Cl. 424-4.000.
Kubiak, Teresa M.: *See—*
  Folkers, Karl; Kubiak, Teresa M.; Stepien, Henryk M.; and Sakura, Naoki, 4,374,828, Cl. 424-177.000.
Kudo, Kazushige; Arai, Yoshihiro; Tsurutani, Ryoichi; and Kiriyama, Shun-ichi, to Unitika Limited. Method for manufacturing heat-stable polyesters using phosphonic acid compounds with cyclic carbonates and catalyst. 4,374,961, Cl. 525-439.000.
Kunieda, Hisashi: *See—*
  Shiratsuchi, Masami; Shimizu, Noboru; Shigyo, Hiromichi; Kyotani, Yoshinori; Kunieda, Hisashi; Kawamura, Kiyoshi; Sato, Seiichi; Akashi, Toshihiro; Nagakura, Masahiko; Sawada, Naotoshi; and Uchida, Yasumi, 4,374,840, Cl. 424-263.000.
Kunkee, Ralph E.; Snow, S. Richard; and Rous, Craig, to University of California, The Regents of The. Method for reducing fusel oil in alcoholic beverages and yeast strain useful in that method. 4,374,859, Cl. 426-14.000.
Kusserow, Bernd: *See—*
  Hudek, Karl, deceased; and Kusserow, Bernd, 4,374,524, Cl. 128-420.00A.
Kuwabara, Shohei: *See—*
  Suzuki, Kazuaki; and Kuwabara, Shohei, 4,374,643, Cl. 8-648.000.
Kuwagaki, Hiroshi; Yano, Kozo; and Takechi, Sadatoshi, to Sharp Kabushiki Kaisha. Dish shaped substrate for electrochromic displays. 4,374,610, Cl. 350-357.000.

Kwok, John C.; and Lee, Ivan S., to Polysar Limited. Pile carpet having a water activatable adhesive. 4,374,884, Cl. 428-95.000.
Kyle, David R.: *See—*
  Morgan, Charles R.; and Kyle, David R., 4,374,963, Cl. 525-486.000.
Kyotani, Yoshinori: *See—*
  Shiratsuchi, Masami; Shimizu, Noboru; Shigyo, Hiromichi; Kyotani, Yoshinori; Kunieda, Hisashi; Kawamura, Kiyoshi; Sato, Seiichi; Akashi, Toshihiro; Nagakura, Masahiko; Sawada, Naotoshi; and Uchida, Yasumi, 4,374,840, Cl. 424-263.000.
Kyoto Ceramic Kabushiki Kaisha: *See—*
  Koga, Kazunori; Nagano, Saburo; Mizuta, Shinichiro; and Nakayama, Masayoshi, 4,374,793, Cl. 264-65.000.
Kyowa Hakko Kogyo Co., Ltd.: *See—*
  Kasai, Masaji; Kono, Motomichi; and Shirahata, Kunikatsu, 4,374,774, Cl. 548-422.000.
L.H.B. Investment, Inc.: *See—*
  Bullen, Ronald S.; and Lillies, Allan T., 4,374,545, Cl. 166-280.000.
Labana, Santokh S.; and Theodore, Ares N., to Ford Motor Company. Powder paint with epoxy and hydroxy copolymer and anhydride. 4,374,954, Cl. 525-207.000.
Labaw, Clifford S.; and Wellman, George R., to SK & F Lab Co. Disulfide intermediate for cimetidine. 4,374,996, Cl. 548-342.000.
Lacroix, Bernard, to Cycles Peugeot. Drive unit for a two-wheeled motor-driven vehicle and vehicle including said unit. 4,374,549, Cl. 180-207.000.
Lam, Chung H.: *See—*
  Grise, Gary D.; Hsieh, Ning; Kalter, Howard L.; and Lam, Chung H., 4,375,085, Cl. 365-104.000.
La Mattina, John L.; and Lipinski, Christopher A., to Pfizer Inc. 2-Guanidino-4-heteroarylthiazoles. 4,374,843, Cl. 424-270.000.
Lamos, Richard A.; and Rosati, Alfonso A., to International Business Machines Corporation. Document feed sheet aligner. 4,374,586, Cl. 271-37.000.
Lange, Howard G., to Zenith Radio Corporation. Image projection screen with decreased color shift as a function of viewing angle, and method of manufacture. 4,374,609, Cl. 350-128.000.
Langlois, Patrice: *See—*
  Cointot, Denis; Langlois, Patrice; and de Passoz, Guy, 4,375,013, Cl. 179-15.55R.
Larcom & Mitchell Company, Inc.: *See—*
  Mitchell, Charles E., 4,374,546, Cl. 172-148.000.
Laroche-Navarron, S.A.: *See—*
  Favier, Colette; Pinhas, Henri; Beranger, Serge; and Pascal, Jean-Claude, 4,374,835, Cl. 424-250.000.
  Favier, Colette; Pinhas, Henri; Beranger, Serge; and Pascal, Jean-Claude, 4,374,837, Cl. 424-253.000.
Larson, Dana E.; Mouton, Ronnie J.; and Mocek, Chris J., to Larson, Dana E.; and Mouton, Ronnie J. Nonpolluting drilling fluid composition. 4,374,737, Cl. 252-8.50P.
Lathrop, John C., to AMP Incorporated. Dielectric plug for a coaxial connector. 4,374,606, Cl. 339-177.00R.
Lattuada, Sergio, to S.T.I. Strumentazione Industriale S.p.A. Single annular membrane type of pneumatic positioner. 4,374,485, Cl. 91-387.000.
Laval, Emmanuel: *See—*
  Nguyen, Jean-Paul; Laval, Emmanuel; and Cendre, Andre, 4,374,547,.Cl. 175-45.000.
Lebeau, Louis; and Bornard, Guy, to Centre Technique de l'Industrie des Papiers, Cartons et Celluloses. Control system for papermaking machine headbox. 4,374,703, Cl. 162-253.000.
le Clerc de Bussy, Jacques. Method for casting parts made of fused ceramic material. 4,374,799, Cl. 264-332.000.
Lee, Chi-Long: *See—*
  Brown, Paul L.; Lee, Chi-Long; and Maxson, Myron T., 4,374,967, Cl. 528-15.000.
Lee, Ivan S.: *See—*
  Kwok, John C.; and Lee, Ivan S., 4,374,884, Cl. 428-95.000.
Lee, Minyoung; and Szala, Lawrence E., to General Electric Company. Composite of metal-bonded cubic boron nitride and a substrate and process of preparation. 4,374,651, Cl. 51-309.000.
Lee, Nancy J., administratrix: *See—*
  Lee, Yoon C., deceased; Deets, Gary L.; and Trementozzi, Quirino A., 4,374,951, Cl. 525-73.000.
Lee, Yoon C., deceased (by Lee, Nancy J., administratrix); Deets, Gary L.; and Trementozzi, Quirino A., to Monsanto Company. Polyblends comprising N-phenylmaleimide copolymers and SAN copolymers. 4,374,951, Cl. 525-73.000.
Leeds & Northrup Company: *See—*
  Baxter, Ronald D.; and Freud, Paul J., 4,375,056, Cl. 338-25.000.
Legrand, Jacques: *See—*
  Holvoet, Gerard; and Legrand, Jacques, 4,375,055, Cl. 335-56.000.
Lehman, Richard L.; and Shepherd, John A., to FMC Corporation. Formulation of phosphate rock slurries. 4,374,817, Cl. 423-319.000.
Lehner, Hermann: *See—*
  Wuthrich, Hans-Rudolf; Speigel, Hubert; Lehner, Hermann; and Krebs, Peter, 4,375,023, Cl. 200-148.00R.
Lehnert, Stanley E., to Zenith Radio Corporation. Network and method for correcting vertical non-linearity and mis-convergence in a television projection system. 4,375,046, Cl. 315-368.000.
Leland Stanford Jr. University, The Board of Trustees of the: *See—*
  Sninsky, John J.; and Cohen, Stanley N., 4,374,927, Cl. 435-68.000.
Lelental, Mark; and Goncher, Gary M., to Eastman Kodak Company. Electrically conductive interlayer for electrically activatable recording element and process. 4,374,916, Cl. 430-31.000.
Lemon, Francis W.: *See—*
  Chuang, Karl T.; Roett, Maurice F.; and Lemon, Francis W., 4,374,907, Cl. 429-57.000.
Lerch, Rolf; and Held, Franz, to Maschinenfabrik Goebel GmbH. Winding machine for continuously winding strips of web material into rolls. 4,374,575, Cl. 242-56.500.
Lester, Joseph E.: *See—*
  Chagnon, Mark S.; Lester, Joseph E.; and Natansohn, Samuel, 4,374,809, Cl. 423-54.000.
Lever Brothers Company: *See—*
  Tai, Ho T., 4,374,747, Cl. 252-186.260.
Li, Hsueh M., to Ethyl Corporation. Phosphonitrilic chloride polymers. 4,374,815, Cl. 423-300.000.
Liauw, Koei-Liang; and Fisch, Michael H., to Witco Chemical Corporation. Thioglycolate and thiopropionate secondary stabilizers. 4,374,945, Cl. 524-114.000.
Licht Druck Ag: *See—*
  Muller, Hans E., 4,374,913, Cl. 430-6.000.
Lignes Telegraphiques et Telephoniques: *See—*
  Escher, Balint; Prince, Dominique; and Romanet, Rene, 4,375,075, Cl. 361-433.000.
Lillies, Allan T.: *See—*
  Bullen, Ronald S.; and Lillies, Allan T., 4,374,545, Cl. 166-280.000.
Lim, Gary M. F.; and Endo, Masaki, to Bristol-Myers Company. Process for preparation of 5-mercaptotetrazolyl-1-acetic acid. 4,374,994, Cl. 548-251.000.
Lindbergh, Charles. Collapsing closure system and operating mechanism. 4,374,537, Cl. 160-189.000.
Lindholm, Alfons S. M.; and Magnusson, Rolf C. G. Tubular electrode. 4,374,908, Cl. 429-140.000.
Lindorfer, Walter; Schulz, Walther; Wagner, Fritz; and Jahn-Held, Wilhelm, to Wintershall Aktiengesellschaft; and Gesellschaft fur Biotechnologische Forschung, part interest to each. Method for removal of oil from sorbents using glycolipids. 4,374,735, Cl. 210-772.000.
Lipinski, Christopher A.: *See—*
  La Mattina, John L.; and Lipinski, Christopher A., 4,374,843, Cl. 424-270.000.
Litman, David J.; Harel, Zvi; and Ullman, Edwin F., to Syva Company. Macromolecular environment control in specific receptor assays. 4,374,925, Cl. 435-7.000.
Lockheed Missiles & Space Company, Inc.: *See—*
  Grodzka, Philomena; McCormick, Paul O.; and Fletcher, James W., 4,374,655, Cl. 55-163.000.
Loevendie, Rudolf H., to IHC Holland N.V. Suction dredger barge. 4,374,504, Cl. 114-37.000.
Loffler, Walter. Web take-off roller assembly. 4,374,448, Cl. 19-106.00R.
Lohrmann, Dieter R., to United States of America, Army. High speed rectangle function generator. 4,375,082, Cl. 364-851.000.
Lord Corporation: *See—*
  Blenner, Donald R.; and Boenig, Herman V., 4,374,694, Cl. 156-272.600.
Loucks, George R.; and Campbell, John R., to General Electric Company. Block copolymers of polyphenylene oxides and non-sterically-hindered high molecular weight aromatic polycarbonates. 4,374,959, Cl. 525-394.000.
Lowrey, Robert E.: *See—*
  Barry, Patrick D.; Lowrey, Robert E.; and Dobbs, Kenneth, 4,375,080, Cl. 364-551.000.
Luntz, Michael B.: *See—*
  Waters, George W.; and Luntz, Michael B., 4,375,099, Cl. 371-6.000.
Lurie, Michael J.: *See—*
  Gorog, Istvan; and Lurie, Michael J., 4,375,096, Cl. 369-102.000.
Lutz, Andre: *See—*
  Heymes, Rene; and Lutz, Andre, 4,374,834, Cl. 424-246.000.
MacDonald, Russell J., to Ionics, Incorporated. Synthesis of water soluble cross-linkers and their use in the manufacture of anionic polymers. 4,374,720, Cl. 204-252.000.
Mac Gregor, David C. Cardiovascular prosthetic devices and implants with porous systems. 4,374,669, Cl. 75-208.00R.
Mack, Mark P.: *See—*
  Berge, Charles T.; Mack, Mark P.; and Starks, Charles M., 4,374,755, Cl. 252-431.00R.
Magnetrol International: *See—*
  Holterbosch, Johan L. M., 4,375,020, Cl. 200-61.210.
Magnussen, Haakon T., Jr.: *See—*
  Berick, Alan C.; and Magnussen, Haakon T., Jr., 4,374,620, Cl. 356-246.000.
Magnusson, Harry; Tallback, Gote; and Wennberg, Ake, to ASEA Aktiebolag. Cyclically controlled electrical equipment having a control angle which is variable over a portion of the operating cycle. 4,375,076, Cl. 363-68.000.
Magnusson, Rolf C. G.: *See—*
  Lindholm, Alfons S. M.; and Magnusson, Rolf C. G., 4,374,908, Cl. 429-140.000.
Mahr, Tibor G., to Du Pont de Nemours, E. I., and Company. Elastomeric film. 4,374,898, Cl. 428-447.000.
Makino, Itsuo: *See—*
  Hirai, Kentaro; Matsutani, Shigeru; Makino, Itsuo; and Ishiba, Teruyuki, 4,374,842, Cl. 424-269.000.
Manabe, Seiichi: *See—*
  Fujiwara, Takashi; Kajita, Shuji; Matsushita, Tetsuo; and Manabe, Seiichi, 4,374,977, Cl. 528-348.000.

Fujiwara, Takashi; Kajita, Shuji; Matsushita, Tetsuo; and Manabe, Seiichi, 4,374,978, Cl. 528-348.000.
Maner, Ronald J.: *See—*
Fleischer, Jean C.; Clark, Gary T.; and Maner, Ronald J., 4,374,768, Cl. 260-158.000.
March, Joseph E., to Platt Luggage, Inc. Carrying case with guards. 4,374,555, Cl. 190-48.000.
Marcus, Michael A., to Eastman Kodak Company. Temperature gradient method of nonuniformly poling a body of polymeric piezoelectric material and novel flexure elements produced thereby. 4,375,042, Cl. 310-357.000.
Marcus, Sanford M., to Du Pont de Nemours, E. I., and Company. Silicon solar cells with aluminum-magnesium alloy low resistance contacts. 4,375,007, Cl. 136-256.000.
Marley Company: *See—*
McGowan, Joseph L., 4,374,790, Cl. 264-32.000.
Martinek, Thomas W., to Teepak, Inc. Six-wheel spinning shirring head. 4,374,447, Cl. 17-1.00R.
Maschinenfabrik Goebel GmbH: *See—*
Lerch, Rolf; and Held, Franz, 4,374,575, Cl. 242-56.500.
Massey, Fred L.; and Callander, Douglas D., to Goodyear Tire & Rubber Company, The. Composition and process for making a green colored polyester. 4,374,949, Cl. 524-720.000.
Massey, Lester G.; Clawson, Lawrence G.; and Syska, Andrew J., to Consolidated Natural Gas Service Company, Inc. Pneumatic transport and heat exchange systems. 4,374,540, Cl. 165-1.000.
Masumoto, Hakaru; and Nakamura, Naoji, to Foundation: The Research Institute of Electric and Magnetic Alloys, The. Electrical resistant article having a small temperature dependence of electric resistance over a wide temperature range and a method of producing the same. 4,374,679, Cl. 148-2.000.
Mathur, Krishan Dyal: *See—*
Wahmi, Hakeem V. R., 4,374,824, Cl. 424-58.000.
Matsumoto, Hiroshi: *See—*
Konishi, Hiroyuki; Hino, Naganori; Matsumoto, Hiroshi; and Yoshida, Ryo, 4,374,662, Cl. 71-103.000.
Matsumura, Susumu; and Suzuki, Takashi, to Canon Kabushiki Kaisha. Mark indicating device for optical apparatus. 4,374,612, Cl. 354-53.000.
Matsuo, Munetsugu: *See—*
Abe, Mitsunobu; Yoshida, Ikushi; Matsuo, Munetsugu; and Hayakawa, Hiroshi, 4,374,682, Cl. 148-12.00C.
Matsushima, Hiroshi: *See—*
Tsuji, Shiro; Matsushima, Hiroshi; Shimeki, Yasuharu; Kihara, Nobuyoshi; and Kato, Misao, 4,375,100, Cl. 371-38.000.
Matsushita Electric Industrial Company: *See—*
Takeshita, Isao; and Hozumi, Shiro, 4,374,468, Cl. 62-333.000.
Matsushita Electric Industrial Co., Ltd.: *See—*
Aizawa, Kimio; and Nagata, Takashi, 4,375,041, Cl. 310-348.000.
Tsuji, Shiro; Matsushima, Hiroshi; Shimeki, Yasuharu; Kihara, Nobuyoshi; and Kato, Misao, 4,375,100, Cl. 371-38.000.
Matsushita, Tetsuo: *See—*
Fujiwara, Takashi; Kajita, Shuji; Matsushita, Tetsuo; and Manabe, Seiichi, 4,374,977, Cl. 528-348.000.
Fujiwara, Takashi; Kajita, Shuji; Matsushita, Tetsuo; and Manabe, Seiichi, 4,374,978, Cl. 528-348.000.
Matsutani, Shigeru: *See—*
Hirai, Kentaro; Matsutani, Shigeru; Makino, Itsuo; and Ishiba, Teruyuki, 4,374,842, Cl. 424-269.000.
Mattel, Inc.: *See—*
Shoff, Daniel J., 4,375,061, Cl. 340-384.00E.
Maury, Louis, to Societe E. Lacroix-Tous Artifices. Electro-magnetic decoy-launcher ammunition. 4,374,494, Cl. 102-357.000.
Maxemchuk, Nicholas F., to Bell Telephone Laboratories, Incorporated. Signal sequence editing method and apparatus with automatic time fitting of edited segments. 4,375,083, Cl. 364-900.000.
Maxson, Myron T.: *See—*
Brown, Paul L.; Lee, Chi-Long; and Maxson, Myron T., 4,374,967, Cl. 528-15.000.
Mayer, Hans: *See—*
Tappe, Horst; Mayer, Hans; and Hofmann, Klaus, 4,374,640, Cl. 8-526.000.
Mazeau, Jean P.: *See—*
Courbin, Philippe; Kerko, David J.; Mazeau, Jean P.; and Morse, David L., 4,374,931, Cl. 501-13.000.
McBride, Thomas R., to Technicare Corporation. Radiographic apparatus and method with logarithmic video compression. 4,375,068, Cl. 358-111.000.
McClain, Robert W., to Glitsch, Inc. Unitized scrubber tower. 4,374,786, Cl. 261-113.000.
Mc Combie, Stuart W., to Schering Corporation. Stable derivatives of (5R,6S,8R)-6-hydroxyethyl-2-ethylthiopenem-3-carboxylic acids. 4,374,844, Cl. 424-270.000.
McCormick, Paul O.: *See—*
Grodzka, Philomena; McCormick, Paul O.; and Fletcher, James W., 4,374,655, Cl. 55-163.000.
McCoy, Charles S., to Chevron Research Company. Absorptive separation of HCl and H_2S from catalytic reformer offgas. 4,374,654, Cl. 55-71.000.
McGowan, Joseph L., to Marley Company. Method and apparatus for pumping concrete to form structure at elevated heights. 4,374,790, Cl. 264-32.000.
McGregor, William H., to American Home Products Corporation. Mammalian collagenase inhibitors. 4,374,765, Cl. 260-112.50R.
McLaughlin, Alexander: *See—*
Farrissey, William J.; McLaughlin, Alexander; and Waszeciak, Douglas P., 4,374,791, Cl. 264-39.000.
McLaughlin, Homer C.; and Weaver, Jimmie D., to Halliburton Company. Oil well treating method and composition. 4,374,739, Cl. 252-8.55R.
McLaughlin, Homer C., to Halliburton Company. Methods of forming isocyanate polymers. 4,374,968, Cl. 528-54.000.
Mead Corporation, The: *See—*
Oliff, James R., 4,374,562, Cl. 206-434.000.
Stout, James T.; and Wood, Prentice J., 4,374,561, Cl. 206-188.000.
Mears, Barry J.: *See—*
Badmin, John S.; and Mears, Barry J., 4,374,833, Cl. 424-225.000.
Mec Co., Ltd.: *See—*
Kawanabe, Yutaka; and Kishimoto, Takeyoshi, 4,374,744, Cl. 252-79.400.
Medtronic, Inc.: *See—*
Iversen, Alfred A., 4,374,527, Cl. 128-785.000.
Melekhov, Rostislav K.: *See—*
Azbukin, Vladimir G.; Balandin, Jury F.; Gorynin, Igor V.; Gluskin, Lev Y.; Zvezdin, Jury I.; Ignatenko, Alexandr G.; Krasnov, Alexandr N.; Melekhov, Rostislav K.; Osipova, Inna S.; Pavlov, Valery N.; Khokhlov, Alexandr A.; Stepanov, Ivan A.; Anfimov, Alexandr F.; Ardentov, Vasily V.; Burmakin, Viktor M.; Ignatov, Viktor A.; Rokhlin, Eduard A.; and Zhitkov, Vladimir V., 4,374,680, Cl. 148-2.000.
Mercer, Frank B., to P.L.G. Research. Production of plastic mesh structure. 4,374,798, Cl. 264-288.800.
Merck & Co., Inc.: *See—*
Anderson, Paul S.; Christy, Marcia E.; Evans, Ben E.; and Remy, David C., 4,374,838, Cl. 424-256.000.
Christensen, Burton G.; Heck, James V.; and Szymonifka, Michael J., 4,374,848, Cl. 424-274.000.
Christensen, Burton G.; and Heck, James V., 4,374,849, Cl. 424-274.000.
Doherty, James B.; and Allison, Debra L., 4,374,997, Cl. 548-539.000.
Harris, Elbert E.; Patchett, Arthur A.; Tristram, Edward W.; and Wyvratt, Matthew J., 4,374,829, Cl. 424-177.000.
Hazen, George G.; Volante, Ralph P.; and Wilson, Kenneth E., 4,374,772, Cl. 260-245.20T.
Merck Patent Gesellschaft mit Beschrankter Haftung: *See—*
Eichler, Jurgen; Herz, Claus; Neisius, Karl-Heinz; and Wehner, Gregor, 4,374,984, Cl. 544-80.000.
Merger, Franz; Towae, Friedrich; and Harder, Wolfgang, to BASF Aktiengesellschaft. Process for the preparation of an aryl mono-, di-, and/or polyurethane. 4,375,000, Cl. 560-25.000.
Merkel, Helmut: *See—*
Braha, Alexandru; Daucher, Hans; Hess, Klaus; Kroetzsch, Peter; Merkel, Helmut; Roedl, Roland; Schwaegerl, Walter; and Stickel, Richard, 4,374,730, Cl. 210-608.000.
Mesnel, Francois, to Etablissements Mesnel. Sealing strip. 4,374,880, Cl. 428-36.000.
Michigan Molecular Institute: *See—*
Quirk, Roderic P., 4,374,957, Cl. 525-314.000.
Michigan Technological University, Board of Control of: *See—*
Fassell, Wayne M., 4,374,499, Cl. 110-243.000.
Micklethwaite, William F. H., to Cominco Ltd. Heat treatment of cadmium mercury telluride. 4,374,684, Cl. 148-13.100.
Microdyne Corporation: *See—*
Anderson, Tore N., 4,375,052, Cl. 333-21.00A.
Miles, John H., to Wean United, Inc. Electrolytic cell. 4,374,718, Cl. 204-202.000.
Miletech, Inc.: *See—*
Wyatt, Charles E., 4,374,785, Cl. 261-51.000.
Miller, Gregory E.; and Toth, John E., to Cubic Western Data. Ticket diverter module. 4,374,564, Cl. 209-583.000.
Miller, Robert C.; and O'Keefe, David B., to Honeywell Information Systems Inc. Keyboard strobe generation system. 4,375,036, Cl. 307-247.00A.
Miller, William R., to RCA Corporation. Method of assembling a CRT using a coded subassembly or part. 4,374,451, Cl. 445-22.000.
Minnesota Mining and Manufacturing Company: *See—*
Arens, Robert P., 4,374,889, Cl. 428-207.000.
Frenchik, Robert A., 4,374,921, Cl. 430-338.000.
Vanden Bergh, Jan D., 4,374,691, Cl. 156-234.000.
Winslow, Louis E., 4,374,883, Cl. 428-40.000.
Minnetti, Federico, to Officine Minnetti di Ornella Raveggi & C.S.a.s. Plant for transferring yarn hanks along a path passing through a treating unit. 4,374,471, Cl. 68-245.000.
Minor, Gerald G. Securing device. 4,374,580, Cl. 248-317.000.
Minotti, Peter L. Torque transfer device for wrench applications. 4,374,479, Cl. 81-57.300.
Mita Industrial Co., Ltd.: *See—*
Sasaki, Koichi; Ishida, Hiroshi; Sumida, Yasuji; and Tanaka, Akira, 4,374,616, Cl. 355-3.0CH.
Mitchell, Charles E., to Larcom & Mitchell Company, Inc. Conditioning apparatus for dirt race tracks. 4,374,546, Cl. 172-148.000.
Mitchell, Thomas O.: *See—*
Whitehurst, Darrell D.; Mitchell, Thomas O.; and Farcasiu, Malvina, 4,374,725, Cl. 208-8.0LE.
Mitscher, Lester A., to University of Kansas Endowment Association, The. Regiospecific synthesis of anthracyclinone compounds such as daunomycinone. 4,374,979, Cl. 536-6.400.

Mitsubishi Denki Kabushiki Kaisha: *See—*
Isozaki, Shin; Sasaki, Masaru; and Sakurai, Kanji, 4,375,070, Cl. 360-75.000.
Komurasaki, Satoshi; Ueda, Atsushi; and Yamane, Tsuneo, 4,374,510, Cl. 123-418.000.
Mitsubishi Jukogyo Kabushiki Kaisha: *See—*
Atsukawa, Masumi; Shinoda, Naoharu; Tatani, Atsushi; and Shimizu, Taku, 4,374,812, Cl. 423-242.000.
Mitsubishi Steel Mfg. Co., Ltd.: *See—*
Hara, Yoshio; and Hashimoto, Yoshiaki, 4,374,721, Cl. 204-293.000.
Mitsuo, Toshiharu; Shoji, Takeshi; and Sanuki, Shin-ichi, to Nippon Steel Corporation. Process for desulfurizing molten pig iron. 4,374,664, Cl. 75-58.000.
Miyamoto, Akihiko: *See—*
Ohbayashi, Keiji; Miyamoto, Akihiko; Iwagaki, Masaru; and Kajiwara, Makoto, 4,374,922, Cl. 430-383.000.
Miyamoto, Akio: *See—*
Hayashi, Takao; Kato, Hajime; Miyamoto, Akio; and Yoshida, Makoto, 4,374,671, Cl. 106-21.000.
Miyazaki, Hirokazu: *See—*
Takemura, Yoshifumi; and Miyazaki, Hirokazu, 4,374,946, Cl. 524-271.000.
Mizuta, Shinichiro: *See—*
Koga, Kazunori; Nagano, Saburo; Mizuta, Shinichiro; and Nakayama, Masayoshi, 4,374,793, Cl. 264-65.000.
Mo och Domsjo Aktiebolag: *See—*
Svensson, Sven A., 4,374,533, Cl. 144-208.00B.
Mobil Oil Corporation: *See—*
Canterino, Peter J.; and Allen, Craig E., 4,374,690, Cl. 156-229.000.
Chen, Catherine S. H., 4,374,740, Cl. 252-8.55D.
Mocek, Chris J.: *See—*
Larson, Dana E.; Mouton, Ronnie J.; and Mocek, Chris J., 4,374,737, Cl. 252-8.50P.
Mochida, Haruo, to Nissan Motor Co., Ltd. Remote control arrangement. 4,374,597, Cl. 292-8.000.
Moffatt, William G.: *See—*
Desai, Jaydev D.; and Moffatt, William G., 4,374,668, Cl. 420-507.000.
Molla, Pietro, to Saffa S.p.A. Process for the purification of phosphorus pentasulphide by distillation under vacuum. 4,374,706, Cl. 203-91.000.
Mollenkopf, Lloyd C., to Rosemount Office Systems, Inc. Panel construction including electrical connectors. 4,375,010, Cl. 174-48.000.
Mollet, Herbert; and Wyrsch, Dieter, to Ciba-Geigy Ltd. Process for the production of negative color images by the silver dye bleach process, and the silver dye bleach material used in this process. 4,374,914, Cl. 430-15.000.
Monsanto Company: *See—*
Coran, Aubert Y.; and Patel, Raman, 4,374,956, Cl. 525-296.000.
Lee, Yoon C., deceased; Deets, Gary L.; and Trementozzi, Quirino A., 4,374,951, Cl. 525-73.000.
Slocombe, Robert J., 4,374,670, Cl. 106-20.000.
Montedison, S.p.A.: *See—*
Scotti, Carlo; Pace, Renato C.; and Carra', Sergio, 4,374,675, Cl. 106-300.000.
Monteyne, Guido, to Paul Wurth S.A. Process for granulation of slag. 4,374,645, Cl. 23-293.00A.
Moore, Bernard C.: *See—*
Carucci, Alberto; and Moore, Bernard C., 4,374,635, Cl. 425-441.000.
Moore, Douglas R.; and Kniepkamp, Alberto, to Norlin Industries, Inc. Vocal effect for musical instrument. 4,374,482, Cl. 84-1.190.
Moore, Howard G.: *See—*
Pacifici, James G.; Newland, Gordon C.; and Moore, Howard G., 4,374,716, Cl. 204-159.190.
Moore, Warren F.: *See—*
Keilp, John P.; Moore, Warren F.; and Sirbu, Victor, 4,374,795, Cl. 264-152.000.
Morgan, Charles R.; and Kyle, David R., to W. R. Grace & Co. Heat curable epoxy-acrylate compositions. 4,374,963, Cl. 525-486.000.
Morishita Pharmaceutical Co., Ltd.: *See—*
Takagi, Takashi, 4,374,763, Cl. 260-112.00B.
Morse, David L.: *See—*
Courbin, Philippe; Kerko, David J.; Mazeau, Jean P.; and Morse, David L., 4,374,931, Cl. 501-13.000.
Morton, David C., to Baker Perkins Holdings Ltd. Apparatus for handling articles. 4,374,559, Cl. 198-429.000.
Mosell, Carl G. C. Cleaning machine with particulate abrasive. 4,374,443, Cl. 15-3.000.
Motorhouse Hire Limited: *See—*
Geary, John; and Johnson, David S., 4,374,592, Cl. 280-476.00R.
Mouton, Ronnie J.: *See—*
Larson, Dana E.; Mouton, Ronnie J.; and Mocek, Chris J., 4,374,737, Cl. 252-8.50P.
Muguruma, Tadahiro: *See—*
Shimizu, Masato; Asoshina, Eishi; Tominaga, Takashi; and Muguruma, Tadahiro, 4,374,890, Cl. 428-212.000.
Muller, Hans E., to Licht Druck Ag. Granulated screen and a method of manufacturing same. 4,374,913, Cl. 430-6.000.
Muramatsu, Hiroaki: *See—*
Tomioka, Kentaro; Hirota, Kazuo; Muramatsu, Hiroaki; and Akahane, Shoji, 4,374,936, Cl. 523-116.000.
Murata, Toshio, to Citizen Watch Co., Ltd. Sound emitting device for electronic timepiece. 4,374,624, Cl. 368-250.000.
Nagakura, Masahiko: *See—*
Shiratsuchi, Masami; Shimizu, Noboru; Shigyo, Hiromichi; Kyotani, Yoshinori; Kunieda, Hisashi; Kawamura, Kiyoshi; Sato, Seiichi; Akashi, Toshihiro; Nagakura, Masahiko; Sawada, Naotoshi; and Uchida, Yasumi, 4,374,840, Cl. 424-263.000.
Nagano, Saburo: *See—*
Koga; Kazunori; Nagano, Saburo; Mizuta, Shinichiro; and Nakayama, Masayoshi, 4,374,793, Cl. 264-65.000.
Nagaoka, Shinji; and Satoh, Koji, to Seiko Koki Kabushiki Kaisha. Exposure control circuit for cameras equipped with self-timer. 4,374,615, Cl. 354-238.000.
Nagata, Takashi: *See—*
Aizawa, Kimio; and Nagata, Takashi, 4,375,041, Cl. 310-348.000.
Nahory, Robert E.; and Tell, Benjamin, to Bell Telephone Laboratories, Incorporated. Method of growing oxide layer on indium gallium arsenide. 4,374,867, Cl. 427-38.000.
Nakajima, Mutsuo: *See—*
Arai, Mamoru; Haneishi, Tatsuo; and Nakajima, Mutsuo, 4,374,764, Cl. 260-112.50R.
Nakamura, Naoji: *See—*
Masumoto, Hakaru; and Nakamura, Naoji, 4,374,679, Cl. 148-2.000.
Nakamura, Taku: *See—*
Yokoyama, Shigeki; Kishimoto, Shinzo; Toriya, Itsuki; and Nakamura, Taku, 4,374,924, Cl. 430-528.000.
Nakamura, Yoshimi: *See—*
Sasaki, Yutaka; and Nakamura, Yoshimi, 4,374,758, Cl. 252-439.000.
Nakata, Kouji: *See—*
Senda, Jihei; Inoue, Yoshihiro; Uenishi, Toshiaki; Harada, Hidefumi; Nakata, Kouji; Akagi, Akio; and Yamasaki, Takanori, 4,374,676, Cl. 106-303.000.
Senda, Jihei; Inoue, Yoshihiro; Uenishi, Toshiaki; Harada, Hidefumi; Nakata, Kouji; and Akagi, Akio, 4,374,677, Cl. 106-309.000.
Nakayama, Masayoshi: *See—*
Koga, Kazunori; Nagano, Saburo; Mizuta, Shinichiro; and Nakayama, Masayoshi, 4,374,793, Cl. 264-65.000.
Nakhle, George D.: *See—*
Bell, Cecil R., Jr.; Nakhle, George D.; and Edwards, A. Russell, 4,374,501, Cl. 112-121.150.
Nalco Chemical Company: *See—*
Allain, Ronald J.; and Smith, Gerald D., 4,375,003, Cl. 564-492.000.
Phillips, Kenneth G.; and Harris, Paul J., 4,374,964, Cl. 525-540.000.
Nara, Kiyoshi: *See—*
Tsuda, Masahiko; Ohta, Kazuhiko; and Nara, Kiyoshi, 4,374,981, Cl. 536-24.000.
Nashua Corporation: *See—*
Veillette, Norman T.; Pian, Charles H. C.; and Ashour, Tahsin A., 4,374,918, Cl. 430-115.000.
Natansohn, Samuel; and Czupryna, Gary, to GTE Laboratories Incorporated. Process for separating tungsten from coinage metals. 4,374,713, Cl. 204-109.000.
Natansohn, Samuel: *See—*
Chagnon, Mark S.; Lester, Joseph E.; and Natansohn, Samuel, 4,374,809, Cl. 423-54.000.
National Research Development Corporation: *See—*
Kemp, David T., 4,374,526, Cl. 128-746.000.
National Research Development, Inc.: *See—*
Hayes, Edward O., 4,374,646, Cl. 44-7.00D.
National Steel Corporation: *See—*
Smith, John R.; Bingle, William D.; and Austin, Lowell W., 4,374,902, Cl. 428-621.000.
Navarro, Ramon V.: *See—*
Protacio, Alfredo C.; Navarro, Ramon V.; Rio, Eliseo M., Jr.; Alonte, Antonio D.; and Pascual, Felix J., 4,374,507, Cl. 123-1.00A.
NCR Corporation: *See—*
van Velthoven, Armand J., 4,375,086, Cl. 365-149.000.
Neary, Robin P.: *See—*
Carter, Leewood C.; Neary, Robin P.; and Curtis, Jay C., 4,374,441, Cl. 412-3.000.
Neisius, Karl-Heinz: *See—*
Eichler, Jurgen; Herz, Claus; Neisius, Karl-Heinz; and Wehner, Gregor, 4,374,984, Cl. 544-80.000.
Nelson, Thomas W.; and Roehl, Dennis L., to Puritan-Bennett Corporation. Squeeze bag type resuscitator apparatus. 4,374,521, Cl. 128-205.130.
Nelson, Virgil W.; and Carlson, William L., Jr., to General Signal Corporation. Torque compensated electrical motor. 4,375,047, Cl. 318-48.000.
Nemcek, Jozef; Roberts, Thomas A.; and Sherliker, Francis R., to Imperial Chemical Industries Limited. Dispersions of siliceous solids in liquid organic media. 4,374,937, Cl. 523-116.000.
Nener, Thomas: *See—*
Arsac, Andre; Ducarre, Michel; Grosbois, Jean; and Nener, Thomas, 4,374,893, Cl. 428-263.000.
Neumann, Ruediger, to Koh-I-Noor Rapidograph, Inc. Stand for writing devices. 4,374,565, Cl. 211-69.500.
Newcombe, Jack, to Cities Service Co. Emulsion breaking of surfactant stabilized crude oil in water emulsions. 4,374,734, Cl. 210-708.000.
Newland, Gordon C.: *See—*
Pacifici, James G.; Newland, Gordon C.; and Moore, Howard G., 4,374,716, Cl. 204-159.190.
NGK Spark Plug Co., Ltd.: *See—*
Suzuki, Junichiro; and Tanaka, Hiroshi, 4,374,685, Cl. 148-126.100.
Takami, Akio; Saito, Thutomu; and Tanaka, Kazutoshi, 4,374,456, Cl. 29-588.000.
Takami, Akio; and Kondo, Kazuo, 4,374,942, Cl. 523-210.000.

- Nguyen, Dung D.: *See—*
  - Zwick, Eugene B.; Nguyen, Dung D.; Brigham, William D.; and Hoffman, Kenneth, 4,374,637, Cl. 431-183.000.
- Nguyen, Jean-Paul; Laval, Emmanuel; and Cendre, Andre, to Institut Francais du Petrole. Crank connector for directional drilling. 4,374,547, Cl. 175-45.000.
- Nilsson, Claes T.: *See—*
  - Jakobsen, Kjell M.; and Nilsson, Claes T., 4,374,878, Cl. 428-35.000.
- Nippon Chemical Industrial Co., Ltd.: *See—*
  - Yamaguchi, Akira, 4,374,897, Cl. 428-446.000.
- Nippon Denso Company Limited: *See—*
  - Kawabata, Takakazu; and Hino, Seigo, 4,374,509, Cl. 123-146.50A.
- Nippon Stainless Steel Co., Ltd.: *See—*
  - Koike, Masao; Hayashi, Yutaka; and Ogaya, Masayoshi, 4,374,683, Cl. 148-12.0EA.
- Nippon Steel Corporation: *See—*
  - Abe, Mitsunobu; Yoshida, Ikushi; Matsuo, Munetsugu; and Hayakawa, Hiroshi, 4,374,682, Cl. 148-12.00C.
  - Hara, Yoshio; and Hashimoto, Yoshiaki, 4,374,721, Cl. 204-293.000.
  - Mitsuo, Toshiharu; Shoji, Takeshi; and Sanuki, Shin-ichi, 4,374,664, Cl. 75-58.000.
- Nishimura, Toshifumi, to Nissan Motor Co., Ltd. Vibration sensor. 4,374,472, Cl. 73-35.000.
- Nissan Motor Co., Ltd.: *See—*
  - Fukunaga, Yukio; and Tsuda, Hiroshi, 4,374,603, Cl. 339-17.00F.
  - Mochida, Haruo, 4,374,597, Cl. 292-8.000.
  - Nishimura, Toshifumi, 4,374,472, Cl. 73-35.000.
- Nite, Rebecca F.: *See—*
  - Sibley, Murray J.; and Nite, Rebecca F., 4,374,745, Cl. 252-106.000.
- Nitto Chemical Industry Co., Ltd.: *See—*
  - Sasaki, Yutaka; and Nakamura, Yoshimi, 4,374,758, Cl. 252-439.000.
- Nitto Electric Industrial Co., Ltd.: *See—*
  - Shimizu, Masato; Asoshina, Eishi; Tominaga, Takashi; and Muguruma, Tadahiro, 4,374,890, Cl. 428-212.000.
- NL Industries, Inc.: *See—*
  - Van Fisk, James, Jr.; and Jordan, John W., 4,374,939, Cl. 523-139.000.
- Norlin Industries, Inc.: *See—*
  - Moore, Douglas R.; and Kniepkamp, Alberto, 4,374,482, Cl. 84-1.190.
- Norman, Bill. Wrist support with palm pad. 4,374,439, Cl. 2-161.00A.
- Novak, Robert W.: *See—*
  - Singh, Balwant; and Novak, Robert W., 4,374,771, Cl. 260-239.30R.
- Obara, Tadashi: *See—*
  - Sindo, Tiuzi; Obara, Tadashi; and Adachi, Hidenari, 4,374,827, Cl. 424-92.000.
- Occidental Chemical Corporation: *See—*
  - Combs, Daniel J., 4,374,709, Cl. 204-30.000.
  - El-Shazly, Mohamed F.; Baker, Kenneth D.; and Rymwid, Yvonne, 4,374,876, Cl. 427-443.100.
- Ocean Phoenix Holdings NV: *See—*
  - Secord, Herbert C., deceased; and Secord, Fanny E. P., executor, 4,374,478, Cl. 73-863.310.
- Officine Minnetti di Ornella Raveggi & C.S.a.s.: *See—*
  - Minnetti, Federico, 4,374,471, Cl. 68-245.000.
- Ogasawara, Hirotake; Hatakeyama, Yoshiharu; and Ishiguro, Mitsuo, to Shiseido Company, Ltd.; and Yoshida Industry Co., Ltd. Method for loading cosmetic material into hollow space. 4,374,796, Cl. 264-101.000.
- Ogawa, Shinsaku, to Asahi Kasei Kogyo Kabushiki Kaisha. Process for the electrolysis of an aqueous sodium chloride solution comprising, in combination, a diaphragm process and a cation exchange membrane process. 4,374,711, Cl. 204-98.000.
- Ogaya, Masayoshi: *See—*
  - Koike, Masao; Hayashi, Yutaka; and Ogaya, Masayoshi, 4,374,683, Cl. 148-12.0EA.
- Ogden, Ralph. Exercise treadmill. 4,374,587, Cl. 272-69.000.
- Ohara, Yuji, to Fuji Photo Film Co., Ltd. Laser recorder. 4,375,064, Cl. 346-108.000.
- Ohara, Yuji, to Fuji Photo Film Co., Ltd. Laser recorder. 4,375,065, Cl. 346-108.000.
- Ohbayashi, Keiji; Miyamoto, Akihiko; Iwagaki, Masaru; and Kajiwara, Makoto, to Konishiroku Photo Industry Co., Ltd. Method for the formation of a dye image. 4,374,922, Cl. 430-383.000.
- Ohlendorf, Heinrich-Wilhelm: *See—*
  - Heinemann, Henning; Ohlendorf, Heinrich-Wilhelm; and Wolf, Klaus-Ulrich, 4,374,846, Cl. 424-274.000.
- Ohta, Kazuhiko: *See—*
  - Tsuda, Masahiko; Ohta, Kazuhiko; and Nara, Kiyoshi, 4,374,981, Cl. 536-24.000.
- Oji Paper Co., Ltd.: *See—*
  - Yasuda, Tokuro; and Yamauchi, Keiji, 4,374,895, Cl. 428-328.000.
- O'Keefe, David B.: *See—*
  - Miller, Robert C.; and O'Keefe, David B., 4,375,036, Cl. 307-247.00A.
- Ole-Arkie Corp.: *See—*
  - Robbins, Jack, 4,374,489, Cl. 99-482.000.
- Olevsky, Howard, to Kimberly-Clark Corporation. Tampon with central reservoir. 4,374,522, Cl. 128-285.000.
- Oliff, James R., to Mead Corporation, The. Article carrier. 4,374,562, Cl. 206-434.000.
- Olin Corporation: *See—*
  - Alexander, Roy P., 4,374,563, Cl. 206-499.000.
  - Combette, Marc; and Ollivier, Jean, 4,374,567, Cl. 227-10.000.
  - Doonan, David F.; and Coe, Noel N., 4,374,985, Cl. 544-190.000.
  - Gray, Thomas J., 4,374,712, Cl. 204-98.000.
  - Raynor, Robert J., 4,374,934, Cl. 521-112.000.
  - Renner, Jacqueline M.; Scott, Robert N.; and Gavin, David F., 4,374,986, Cl. 544-221.000.
- Olinger, Rainer; and van den Bossche, Andre, to Uhde GmbH. Process for the removal of tritium from the product solutions obtained by the Purex process. 4,374,762, Cl. 252-631.000.
- Ollivier, Jean: *See—*
  - Combette, Marc; and Ollivier, Jean, 4,374,567, Cl. 227-10.000.
- Olschewski, Armin; Brandenstein, Manfred; Walter, Lothar; and Ernst, Horst M., to SKF Kugellagerfabriken GmbH. Clutch release device. 4,374,556, Cl. 192-98.000.
- Olympus Optical Co., Ltd.: *See—*
  - Baba, Kazuo, 4,374,525, Cl. 128-660.000.
  - Hagiwara, Toshihiko, 4,374,517, Cl. 128-6.000.
- Omron Tateisi Electronics Co.: *See—*
  - Uchida, Yasuo, 4,375,032, Cl. 235-380.000.
- Omura, Hideo; and Horino, Shigeo, to Tokyo Shibaura Denki Kabushiki Kaisha. Apparatus for processing sheet like materials. 4,374,463, Cl. 53-54.000.
- O'Neill, Padraic S., to Agrico Chemical Company. Recovery of fluorine from pond water of wet process phosphoric acid plants and recycling of defluorinated water. 4,374,810, Cl. 423-160.000.
- Ono Pharmaceutical Co., Ltd.: *See—*
  - Tanouchi, Tadao; Kawamura, Masanori; and Hayashi, Masaki, 4,374,845, Cl. 424-273.00R.
- Osipova, Inna S.: *See—*
  - Azbukin, Vladimir G.; Balandin, Jury F.; Gorynin, Igor V.; Gluskin, Lev Y.; Zvezdin, Jury I.; Ignatenko, Alexandr G.; Krasnov, Alexandr N.; Melekhov, Rostislav K.; Osipova, Inna S.; Pavlov, Valery N.; Khokhlov, Alexandr A.; Stepanov, Ivan A.; Anfimov, Alexandr F.; Ardentov, Vasily V.; Burmakin, Viktor M.; Ignatov, Viktor A.; Rokhlin, Eduard A.; and Zhitkov, Vladimir V., 4,374,680, Cl. 148-2.000.
- Otis Elevator Company: *See—*
  - Weise, Andrew P.; and Wisner, George R., 4,375,057, Cl. 340-21.000.
- Otwell, Corbett I.: *See—*
  - Westerman, Granval W.; and Otwell, Corbett I., 4,374,544, Cl. 166-252.000.
- Owens-Illinois, Inc.: *See—*
  - Davey, Donald G., 4,374,659, Cl. 65-334.000.
- P.L.G. Research: *See—*
  - Mercer, Frank B., 4,374,798, Cl. 264-288.800.
- Pace, Renato C.: *See—*
  - Scotti, Carlo; Pace, Renato C.; and Carra', Sergio, 4,374,675, Cl. 106-300.000.
- Pacifici, James G.; Newland, Gordon C.; and Moore, Howard G., to Eastman Kodak Company. Novel amorphous aromatic polyester modified with amine and UV curable composition containing the same. 4,374,716, Cl. 204-159.190.
- Palilla, Frank C.; Gaudet, Gary G.; and Baglio, Joseph A., to GTE Laboratories Incorporated. Catalytic process for removing toxic gases from gas streams. 4,374,819, Cl. 423-570.000.
- Papst, Gero; Ropke, Gunther; and Topfer, Hans J., to Hamburger Stahlwerke GmbH. Apparatus for the direct reduction of iron ores. 4,374,585, Cl. 266-81.000.
- Pardini, Franco P.; and De Vizzi, Francesco, to General Electric Company. Rapid electric-arc extinguishing assembly in circuit-breaking devices such as electric circuit breakers. 4,375,021, Cl. 200-147.00B.
- Pascal, Jean-Claude: *See—*
  - Favier, Colette; Pinhas, Henri; Beranger, Serge; and Pascal, Jean-Claude, 4,374,835, Cl. 424-250.000.
  - Favier, Colette; Pinhas, Henri; Beranger, Serge; and Pascal, Jean-Claude, 4,374,837, Cl. 424-253.000.
- Pascual, Felix J.: *See—*
  - Protacio, Alfredo C.; Navarro, Ramon V.; Rio, Eliseo M., Jr.; Alonte, Antonio D.; and Pascual, Felix J., 4,374,507, Cl. 123-1.00A.
- Pasek, Eugene A.: *See—*
  - Harju, Philip H.; and Pasek, Eugene A., 4,374,756, Cl. 252-435.000.
- Patchett, Arthur A.: *See—*
  - Harris, Elbert E.; Patchett, Arthur A.; Tristram, Edward W.; and Wyvratt, Matthew J., 4,374,829, Cl. 424-177.000.
- Patel, Raman: *See—*
  - Coran, Aubert Y.; and Patel, Raman, 4,374,956, Cl. 525-296.000.
- Paul Wurth S.A.: *See—*
  - Monteyne, Guido, 4,374,645, Cl. 23-293.00A.
- Pavio, Anthony M., to Rockwell International Corporation. Suspended substrate—3 dB microwave quadrature coupler. 4,375,054, Cl. 333-116.000.
- Pavlakis, Dimitris: *See—*
  - Sakhuja, Ravinder K.; Cole, William E.; and Pavlakis, Dimitris, 4,374,660, Cl. 65-335.000.
- Pavlov, Valery N.: *See—*
  - Azbukin, Vladimir G.; Balandin, Jury F.; Gorynin, Igor V.; Gluskin, Lev Y.; Zvezdin, Jury I.; Ignatenko, Alexandr G.; Krasnov, Alexandr N.; Melekhov, Rostislav K.; Osipova, Inna S.; Pavlov, Valery N.; Khokhlov, Alexandr A.; Stepanov, Ivan A.; Anfimov, Alexandr F.; Ardentov, Vasily V.; Burmakin, Viktor M.; Ignatov, Viktor A.; Rokhlin, Eduard A.; and Zhitkov, Vladimir V., 4,374,680, Cl. 148-2.000.
- Pechanek, Gerald G.: *See—*
  - Hanft, Roy F.; and Pechanek, Gerald G., 4,374,625, Cl. 400-98.000.

- Peck, Raymond E.; Petresh, Randall P.; and Benninger, Gary N., to Ford Motor Company. Caliper type disc brake. 4,374,553, Cl. 188-73.450.
- Pena, Blas D. Fuel saver system for internal combustion engines. 4,374,508, Cl. 123-25.00E.
- Pencept, Inc.: *See—*
  - Blesser, Barry, 4,375,081, Cl. 364-724.000.
- Perfect, Frederick H., to Reading Alloys, Inc. Ferrovanadium carbide addition agents and process for their production. 4,374,667, Cl. 420-424.000.
- Perkin-Elmer Corporation, The: *See—*
  - Theall, C. Earle, 4,375,051, Cl. 333-17.00M.
- Perma-Comb Systems, Inc.: *See—*
  - Drapkin, Herbert, 4,374,440, Cl. 6-10.000.
- Petersen, Harro: *See—*
  - Eckert, Guenter; Wuertele, Lothar; Petersen, Harro; Goeckel, Ulrich; and Fischer, Kurt, 4,374,872, Cl. 427-338.000.
- Petersen, Stephen K., to Sheldahl, Inc. Membrane switch having adhesive label as edge seal. 4,375,018, Cl. 200-5.00A.
- Peterson, Harold J., to Farmers Pride Cheese, Inc. Whey filter. 4,374,488, Cl. 99-459.000.
- Peterson, John O. H.; and Fales, Howard S., to Air Products and Chemicals, Inc. Amines via the amination of olefins. 4,375,002, Cl. 564-445.000.
- Petresh, Randall P.: *See—*
  - Peck, Raymond E.; Petresh, Randall P.; and Benninger, Gary N., 4,374,553, Cl. 188-73.450.
- Petrolite Corporation: *See—*
  - Robinson, James R., 4,374,724, Cl. 204-302.000.
- Pfeiffer, Robert C.: *See—*
  - Stephenson, Robert L.; and Pfeiffer, Robert C., 4,374,449, Cl. 24-230.0AL.
- Pfizer Inc.: *See—*
  - Armstrong, William W., 4,374,826, Cl. 424-80.000.
  - La Mattina, John L.; and Lipinski, Christopher A., 4,374,843, Cl. 424-270.000.
- Pflugrad, William G.: *See—*
  - Cocco, Eugene R.; Pflugrad, William G.; and Small, Byron L., 4,375,012, Cl. 174-69.000.
- Phenix Works Societe Anonyme: *See—*
  - Piedboeuf, Albert; Polard, Victor; and Cornez, Andre, 4,374,873, Cl. 427-349.000.
- Phillips, Kenneth G.; and Harris, Paul J., to Nalco Chemical Company. Method of preparing high molecular weight polyamines. 4,374,964, Cl. 525-540.000.
- Phillips Petroleum Company: *See—*
  - Ford, Gregory A., 4,374,476, Cl. 73-23.100.
- Pian, Charles H. C.: *See—*
  - Veillette, Norman T.; Pian, Charles H. C.; and Ashour, Tahsin A., 4,374,918, Cl. 430-115.000.
- Piedboeuf, Albert; Polard, Victor; and Cornez, Andre, to Phenix Works Societe Anonyme. Process and installation for coating a metallic strip continuously with a covering layer. 4,374,873, Cl. 427-349.000.
- Pierce, Harold W. Fireplace heater stove. 4,374,514, Cl. 126-123.000.
- Pifco Limited: *See—*
  - Wood, Paul A. P., 4,375,028, Cl. 219-441.000.
- Pigney, Keith D.: *See—*
  - Stuck, Earl N.; Pigney, Keith D.; and Gifford, Howard, 4,374,789, Cl. 264-12.000.
- Pinhas, Henri: *See—*
  - Favier, Colette; Pinhas, Henri; Beranger, Serge; and Pascal, Jean-Claude, 4,374,835, Cl. 424-250.000.
  - Favier, Colette; Pinhas, Henri; Beranger, Serge; and Pascal, Jean-Claude, 4,374,837, Cl. 424-253.000.
- Pinter, Warren H.: *See—*
  - Smith, Dale E.; and Pinter, Warren H., 4,374,689, Cl. 156-169.000.
- Pioneer Electronic Corporation: *See—*
  - Takahashi, Shinya, 4,375,093, Cl. 369-41.000.
  - Yoshio, Junichi, 4,375,092, Cl. 369-41.000.
- Piscitelli, R. Amelia: *See—*
  - Hemmer, Valentine J.; Piscitelli, R. Amelia; Fischer, Charles P.; and Washburn, James C., 4,374,604, Cl. 339-59.00R.
- Pitt, William V. Method of manufacturing atmospheric resistant doors. 4,374,693, Cl. 156-267.000.
- Pitzele, Barnett S.; and Jones, Peter H., to G. D. Searle & Co. 5-ASA Drug delivery system. 4,374,932, Cl. 521-32.000.
- Platt Luggage, Inc.: *See—*
  - March, Joseph E., 4,374,555, Cl. 190-48.000.
- PLM Aktiebolag: *See—*
  - Jakobsen, Kjell M.; and Nilsson, Claes T., 4,374,878, Cl. 428-35.000.
- Plum, Hans; and Schroeer, Ulrich, to Schering Aktiengesellschaft. Monoalkylfluorotin compounds. 4,374,778, Cl. 260-429.700.
- Poenisch, Paul A.: *See—*
  - Ahlquist, C. Norman; Hu, Yaw Wen; Schoen, Peter F.; and Poenisch, Paul A., 4,374,915, Cl. 430-22.000.
- Pokhis, Naum; and Pokhis, Yakov. Handrail. 4,374,584, Cl. 256-1.000.
- Pokhis, Yakov: *See—*
  - Pokhis, Naum; and Pokhis, Yakov, 4,374,584, Cl. 256-1.000.
- Polard, Victor: *See—*
  - Piedboeuf, Albert; Polard, Victor; and Cornez, Andre, 4,374,873, Cl. 427-349.000.
- Polaroid Corporation: *See—*
  - Stempeck, John W., 4,374,613, Cl. 354-196.000.
- Pollack, Joel M., to Xerox Corporation. Orifice plate for ink jet printing machines. 4,374,707, Cl. 204-11.000.
- Polysar Limited: *See—*
  - Kwok, John C.; and Lee, Ivan S., 4,374,884, Cl. 428-95.000.
- Presser, Dwight W. Water ski handle and tow rope arrangement. 4,374,638, Cl. 441-69.000.
- Preukschat, A. Werner: *See—*
  - Renner, Udo; and Preukschat, A. Werner, 4,374,579, Cl. 244-158.00R.
- Prevorsek, Dusan C.; DeBona, Bruce T.; and Kesten, Yali, to Allied Corporation. Polycarbonates with suppressed aging characteristics. 4,374,973, Cl. 528-191.000.
- Prince, Dominique: *See—*
  - Escher, Balint; Prince, Dominique; and Romanet, Rene, 4,375,075, Cl. 361-433.000.
- Prochazka, Svante; and Greskovich, Charles D., to General Electric Company. Sintering of silicon nitride with Be additive. 4,374,792, Cl. 264-65.000.
- Procter & Gamble Company, The: *See—*
  - Callicott, Robert H., 4,374,572, Cl. 239-37.000.
  - Hong, Charles A.; and Brabbs, William J., 4,374,862, Cl. 426-94.000.
  - Savage, Frances H., 4,374,863, Cl. 426-553.000.
  - Strobel, Rudolf G., 4,374,865, Cl. 426-599.000.
- Proctor & Gamble Company, The: *See—*
  - Bolich, Raymond E., Jr.; Hartsough, Lloyd B.; and Cothran, Philip E., 4,374,825, Cl. 424-70.000.
- Protacio, Alfredo C.; Navarro, Ramon V.; Rio, Eliseo M., Jr.; Alonte, Antonio D.; and Pascual, Felix J., to Protacio, Alfredo C. Device for introducing alcohol into gasoline engine as supplemental fuel. 4,374,507, Cl. 123-1.00A.
- Puchalski, Eugene; Donahue, Frances A.; and Dixon, Richard P., to Charles of the Ritz Group Ltd. Combined allantoin-hydrolyzed animal protein product and method. 4,374,766, Cl. 260-123.700.
- Pullukat, Thomas J.; and Hoff, Raymond E., to Chemplex Company. Polymerization catalyst and method. 4,374,753, Cl. 252-429.00B.
- Pure Air, Inc.: *See—*
  - Gaylord, Norman G., 4,374,814, Cl. 423-245.000.
- Puritan-Bennett Corporation: *See—*
  - Nelson, Thomas W.; and Roehl, Dennis L., 4,374,521, Cl. 128-205.130.
- Qualitone Hearing Aids Inc.: *See—*
  - Harada, Mas, 4,375,016, Cl. 179-182.00R.
- Quient, Andrew. Marbleized ceramic articles. 4,374,688, Cl. 156-89.000.
- Quirk, Roderic P., to Michigan Molecular Institute. Triblock polymers of a monovinyl aromatic compound and myrcene. 4,374,957, Cl. 525-314.000.
- Rabatin, Jacob G., to General Electric Company. X-Ray intensifying screen. 4,374,905, Cl. 428-691.000.
- Raghava, Ram S., to Formica Corporation. Color registered decorative laminates. 4,374,886, Cl. 428-172.000.
- Randall, Richard L.: *See—*
  - Boone, Jerry C.; and Randall, Richard L., 4,374,628, Cl. 403-162.000.
- Rannenberg, George C., to United Technologies Corporation. Variable capacity air cycle refrigeration system. 4,374,469, Cl. 62-402.000.
- Rao, Subbarao N., to Burns & Roe, Inc. Flame arrestor. 4,374,649, Cl. 48-192.000.
- Rasberger, Michael: *See—*
  - Evans, Samuel; Rasberger, Michael; and Gegner, Eberhard, 4,374,742, Cl. 252-48.400.
- Ray, Siba P., to Aluminum Company of America. Inert electrode formulations. 4,374,761, Cl. 252-519.000.
- Raynor, Robert J., to Olin Corporation. Semi-flexible foam polymer used in packaging. 4,374,934, Cl. 521-112.000.
- Raytheon Company: *See—*
  - Goldberg, Ernest; Trembly, Gray C.; and Zarr, William A., 4,374,492, Cl. 102-220.000.
- RCA Corporation: *See—*
  - Goodman, Lawrence A., 4,374,455, Cl. 29-571.000.
  - Gorog, Istvan; and Lurie, Michael J., 4,375,096, Cl. 369-102.000.
  - Keizer, Eugene O., 4,375,095, Cl. 369-55.000.
  - Kelleher, Kevin C.; and Christopher, Todd J., 4,375,094, Cl. 369-43.000.
  - Miller, William R., 4,374,451, Cl. 445-22.000.
  - Smith, Theodore D., 4,375,017, Cl. 200-5.00A.
- Reading Alloys, Inc.: *See—*
  - Perfect, Frederick H., 4,374,667, Cl. 420-424.000.
- Recognition Equipment Incorporated: *See—*
  - Herd, Richard D., 4,375,066, Cl. 346-140.00R.
- Region, James A. Wood splitting device. 4,374,532, Cl. 144-193.00A.
- Reichhold Chemicals, Incorporated: *See—*
  - Sanfilippo, Salvatore G.; and White, James T., 4,374,899, Cl. 428-514.000.
- Reliance Electric Company: *See—*
  - Glogolja, Miroslav; and Baumgarten, Arthur A., 4,375,073, Cl. 361-91.000.
  - Glogolja, Miroslav, 4,375,074, Cl. 361-91.000.
- Remy, David C.: *See—*
  - Anderson, Paul S.; Christy, Marcia E.; Evans, Ben E.; and Remy, David C., 4,374,838, Cl. 424-256.000.
- Renner, Jacqueline M.; Scott, Robert N.; and Gavin, David F., to Olin Corporation. Selected siloxane adducts of tris(2-hydroxyethyl-)isocyanurate. 4,374,986, Cl. 544-221.000.
- Renner, Udo; and Preukschat, A. Werner, to European Space Agency. Spacecraft configuration permitting a continuous three-axes attitude control. 4,374,579, Cl. 244-158.00R.

Research Corp.: *See—*
Schneider, Morris D., 4,374,830, Cl. 424-177.000.
Resnick, Bruce M., to GAF Corporation. Fungicidal sulfur-containing phenyl esters and mixtures thereof. 4,374,854, Cl. 424-311.000.
Resnick, Bruce M., to GAF Corporation. Fungicidal naphthylene diesters and mixtures thereof. 4,374,855, Cl. 424-313.000.
Rhone-Poulenc-Textile: *See—*
Arsac, Andre; Ducarre, Michel; Grosbois, Jean; and Nener, Thomas, 4,374,893, Cl. 428-263.000.
Rice, Anthony J., to International Business Machines Corporation. Self-calibrating overcurrent detector. 4,375,072, Cl. 361-87.000.
Rice, Warren A., to Robert Bosch GmbH. Apparatus for decoring and explosive treatment of materials. 4,374,538, Cl. 164-401.000.
Richardson, Charles N., to Tri-State Oil Tool Industries, Inc. Apparatus for well treating. 4,374,543, Cl. 166-192.000.
Ricketts, Martin W.; and Stubbens, Neil A., to International Business Machines Corp. Digital data display system. 4,375,079, Cl. 364-518.000.
Rieck, Hans-Peter, to Hoechst Aktiengesellschaft. Process for the preparation of alkali metal salts of imidodisulfonic acid. 4,374,818, Cl. 423-388.000.
Rieder, Walter E., to Cincinnati Milacron Inc. Polyamide and functional fluid containing same. 4,374,741, Cl. 252-34.000.
Rio, Eliseo M., Jr.: *See—*
Protacio, Alfredo C.; Navarro, Ramon V.; Rio, Eliseo M., Jr.; Alonte, Antonio D.; and Pascual, Felix J., 4,374,507, Cl. 123-1.00A.
Ritchey, Robert W.: *See—*
Abodishish, Hani A.; and Ritchey, Robert W., 4,374,806, Cl. 423-10.000.
Robbins, Jack, to Ole-Arkie Corp. Adaptable food smoker attachment. 4,374,489, Cl. 99-482.000.
Robbins, William E.: *See—*
Hunt, LaWanda M.; Thompson, Malcolm J.; and Robbins, William E., 4,374,850, Cl. 424-274.000.
Hunt, LaWanda M.; Thompson, Malcolm J.; and Robbins, William E., 4,374,851, Cl. 424-285.000.
Robert Bosch GmbH: *See—*
Rice, Warren A., 4,374,538, Cl. 164-401.000.
Roberts, Donald R.; Kritchevsky, Gina R.; and Hannon, Martin J., to Celanese Corporation. Glass bottle coating composition made from a salt of a polyamine terminated polyepoxide adduct, an epoxy cross-linker, a reactive silane, a surfactant and a natural or synthetic wax. 4,374,879, Cl. 428-35.000.
Roberts, Jonathan W., to Essex Group, Inc. Moisture resistant insulating mica tape comprising a monoalkoxy titanate. 4,374,892, Cl. 428-233.000.
Roberts, Thomas A.: *See—*
Nemcek, Jozef; Roberts, Thomas A.; and Sherliker, Francis R., 4,374,937, Cl. 523-116.000.
Robertson, Allan J., to American Cyanamid Company. Di-2,4,4'-trimethylpentylphosphinic acid and its preparation. 4,374,780, Cl. 260-502.40R.
Robinson, Ivan M., to Du Pont de Nemours, E. I., and Company. Sulfur-modified copolyether glycols, a method for preparing them, and polyurethanes prepared therefrom. 4,374,970, Cl. 528-79.000.
Robinson, James R., to Petrolite Corporation. Plural stage desalting-/dehydrating apparatus. 4,374,724, Cl. 204-302.000.
Robinson, John M., to Glaxo Group Limited. Intermediates for use in the preparation of cephalosporin antibiotics. 4,374,983, Cl. 544-24.000.
Robinson, Martin A.: *See—*
Anello, Louis G.; Van Der Puy, Michael; Robinson, Martin A.; and Eibeck, Richard E., 4,374,782, Cl. 260-544.00F.
Rockwell International Corporation: *See—*
Pavio, Anthony M., 4,375,054, Cl. 333-116.000.
Rodriguez, Angel L. Bicycle freewheel wrench pry adapter. 4,374,453, Cl. 29-426.500.
Roedl, Roland: *See—*
Braha, Alexandru; Daucher, Hans; Hess, Klaus; Kroetzsch, Peter; Merkel, Helmut; Roedl, Roland; Schwaegerl, Walter; and Stickel, Richard, 4,374,730, Cl. 210-608.000.
Roehl, Dennis L.: *See—*
Nelson, Thomas W.; and Roehl, Dennis L., 4,374,521, Cl. 128-205.130.
Roescheisen, Friedrich: *See—*
Gerke, Peter; Arndt, Gerhard; Roescheisen, Friedrich; and Bruentrup, Heinrich, 4,375,098, Cl. 370-110.100.
Roett, Maurice F.: *See—*
Chuang, Karl T.; Roett, Maurice F.; and Lemon, Francis W., 4,374,907, Cl. 429-57.000.
Roger, Gillet, to Alsthom-Atlantique; and Electricite de France. System for fixing stator winding bars of a dynamo-electric rotating machine. 4,375,043, Cl. 310-258.000.
Rohm and Haas Company: *See—*
Smolanoff, Joel R., 4,374,991, Cl. 546-245.000.
Rokhlin, Eduard A.: *See—*
Azbukin, Vladimir G.; Balandin, Jury F.; Gorynin, Igor V.; Gluskin, Lev Y.; Zvezdin, Jury I.; Ignatenko, Alexandr G.; Krasnov, Alexandr N.; Melekhov, Rostislav K.; Osipova, Inna S.; Pavlov, Valery N.; Khokhlov, Alexandr A.; Stepanov, Ivan A.; Anfimov, Alexandr F.; Ardentov, Vasily V.; Burmakin, Viktor M.; Ignatov, Viktor A.; Rokhlin, Eduard A.; and Zhitkov, Vladimir V., 4,374,680, Cl. 148-2.000.
Rolls Royce Limited: *See—*
Sotheran, Arthur, 4,374,466, Cl. 60-39.360.
Romanet, Rene: *See—*
Escher, Balint; Prince, Dominique; and Romanet, Rene, 4,375,075, Cl. 361-433.000.
Ropke, Gunther: *See—*
Papst, Gero; Ropke, Gunther; and Topfer, Hans J., 4,374,585, Cl. 266-81.000.
Rosati, Alfonso A.: *See—*
Lamos, Richard A.; and Rosati, Alfonso A., 4,374,586, Cl. 271-37.000.
Rosemount Office Systems, Inc.: *See—*
Mollenkopf, Lloyd C., 4,375,010, Cl. 174-48.000.
Rothwell, Ronald E.; Rowan, Hugh H.; and Dunbar, James J., to Allied Corporation. Production of polyester fibers of improved stability. 4,374,960, Cl. 525-436.000.
Rous, Craig: *See—*
Kunkee, Ralph E.; Snow, S. Richard; and Rous, Craig, 4,374,859, Cl. 426-14.000.
Rouse, Michael W.; and Thelen, Robert L. Apparatus for shredding rubber tires and other waste materials. 4,374,573, Cl. 241-101.700.
Rowan, Hugh H.: *See—*
Rothwell, Ronald E.; Rowan, Hugh H.; and Dunbar, James J., 4,374,960, Cl. 525-436.000.
Ruggles, Roger, to Isokinetic Sales Co. Isokinetic exercise device with speed control. 4,374,588, Cl. 272-132.000.
Runge, Richard J.: *See—*
Thompson, Don D.; Brown, Robert J. S.; and Runge, Richard J., 4,375,090, Cl. 367-73.000.
Ruwart, Mary J., to Upjohn Company, The. Liver cytoprotection using PGE's. 4,374,856, Cl. 424-317.000.
Ryan, Ralph L., to Compensating Tension Controls, Inc. Semi-automatic roll winding machine. 4,374,576, Cl. 242-58.400.
Rymwid, Yvonne: *See—*
El-Shazly, Mohamed F.; Baker, Kenneth D.; and Rymwid, Yvonne, 4,374,876, Cl. 427-443.100.
S. A. Labaz N.V.: *See—*
Descamps, Marcel; Urbain, Marcel, deceased; Urbain, Claire, legal representative; Urbain, Jacques J. Z., legal representative; Urbain, Jean P. M. C., legal representative; and Urbain, Nadine C. J., legal representative, 4,374,841, Cl. 424-263.000.
S.T.I. Strumentazione Industriale S.p.A.: *See—*
Lattuada, Sergio, 4,374,485, Cl. 91-387.000.
Saam, John C.: *See—*
Chou, Yungnien J.; and Saam, John C., 4,374,953, Cl. 525-153.000.
Sach, George S.: *See—*
Durant, Graham J.; Ganellin, Charon R.; and Sach, George S., 4,374,839, Cl. 424-263.000.
Saffa S.p.A.: *See—*
Molla, Pietro, 4,374,706, Cl. 203-91.000.
Saito, Cyuichi, to Hitachi, Ltd. Steps of passenger conveyor. 4,374,558, Cl. 198-333.000.
Saito, Kiyoshi: *See—*
Kikuchi, Akira; Hagiya, Akio; Shinkai, Kazuteru; Kohno, Masaru; and Saito, Kiyoshi, 4,374,477, Cl. 73-861.180.
Saito, Thutomu: *See—*
Takami, Akio; Saito, Thutomu; and Tanaka, Kazutoshi, 4,374,456, Cl. 29-588.000.
Sakazaki, Yoshitami: *See—*
Hayakawa, Masatoshi; and Sakazaki, Yoshitami, 4,375,024, Cl. 219-56.000.
Sakhuja, Ravinder K.; Cole, William E.; and Pavlakis, Dimitris, to Thermo Electron Corporation. Fluidized bed glass batch preheater. 4,374,660, Cl. 65-335.000.
Sakura, Naoki: *See—*
Folkers, Karl; Kubiak, Teresa M.; Stepien, Henryk M.; and Sakura, Naoki, 4,374,828, Cl. 424-177.000.
Sakurai, Kanji: *See—*
Isozaki, Shin; Sasaki, Masaru; and Sakurai, Kanji, 4,375,070, Cl. 360-75.000.
Samson, Marc: *See—*
Kleemann, Axel; and Samson, Marc, 4,374,995, Cl. 548-309.000.
Sandberg, Karen R.: *See—*
Turbak, Albin F.; Snyder, Fred W.; and Sandberg, Karen R., 4,374,702, Cl. 162-100.000.
Sanders, Franciscus H. M.: *See—*
Sanders, Jozef A. M.; Sanders, Franciscus H. M.; Kalter, Hendrikus; and van de Ven, Everhardus P. G. T., 4,374,698, Cl. 156-643.000.
Sanders, Jozef A. M.; and Sanders, Franciscus H. M., 4,374,699, Cl. 156-643.000.
Sanders, Jozef A. M.; Sanders, Franciscus H. M.; Kalter, Hendrikus; and van de Ven, Everhardus P. G. T., to U.S. Philips Corporation. Method of manufacturing a semiconductor device. 4,374,698, Cl. 156-643.000.
Sanders, Jozef A. M.; and Sanders, Franciscus H. M., to U.S. Philips Corporation. Method of manufacturing a semiconductor device. 4,374,699, Cl. 156-643.000.
Sanderson, Roger S.; and Whelchel, Robert C. Sterilized storage container. 4,374,570, Cl. 236-92.00R.
Sandgren, Kurt K.; and Selving, Hans V. L., to Telefonaktiebolaget L M Ericsson. Method of impregnating a cable. 4,374,870, Cl. 427-120.000.
Sandstrom, Paul H., to Goodyear Tire & Rubber Company, The. Particle size control of SBR/carbon black powder. 4,374,941, Cl. 523-206.000.

Sanfilippo, Salvatore G.; and White, James T., to Reichhold Chemicals, Incorporated. Hardboard treating composition and process for forming hardboard surfaces. 4,374,899, Cl. 428-514.000.
Sankyo Company, Limited: *See—*
Arai, Mamoru; Haneishi, Tatsuo; and Nakajima, Mutsuo, 4,374,764, Cl. 260-112.50R.
Sanuki, Shin-ichi: *See—*
Mitsuo, Toshiharu; Shoji, Takeshi; and Sanuki, Shin-ichi, 4,374,664, Cl. 75-58.000.
Sasaki, Koichi; Ishida, Hiroshi; Sumida, Yasuji; and Tanaka, Akira, to Mita Industrial Co., Ltd. Image-forming apparatus having a photosensitive member transfer mechanism. 4,374,616, Cl. 355-3.0CH.
Sasaki, Masaru: *See—*
Isozaki, Shin; Sasaki, Masaru; and Sakurai, Kanji, 4,375,070, Cl. 360-75.000.
Sasaki, Yoji: *See—*
Kaneki, Satoru; Kikuchi, Yuzi; and Sasaki, Yoji, 4,374,912, Cl. 430-5.000.
Sasaki, Yutaka; and Nakamura, Yoshimi, to Nitto Chemical Industry Co., Ltd. Preparation of stable tellurium-containing solution from metallic tellurium and process for producing tellurium-antimony containing oxide catalyst using said solution. 4,374,758, Cl. 252-439.000.
Sato, Hideo: *See—*
Inukai, Takashi; Sato, Hideo; Inoue, Hiromichi; and Fukui, Masahiro, 4,374,748, Cl. 252-299.660.
Sato, Seiichi: *See—*
Shiratsuchi, Masami; Shimizu, Noboru; Shigyo, Hiromichi; Kyotani, Yoshinori; Kunieda, Hisashi; Kawamura, Kiyoshi; Sato, Seiichi; Akashi, Toshihiro; Nagakura, Masahiko; Sawada, Naotoshi; and Uchida, Yasumi, 4,374,840, Cl. 424-263.000.
Satoh, Koji: *See—*
Nagaoka, Shinji; and Satoh, Koji, 4,374,615, Cl. 354-238.000.
Sauerwein, William D., to Black & Decker Inc. Brush holder assembly. 4,375,040, Cl. 310-239.000.
Savage, Frances H., to Procter & Gamble Co., The. Compositions and methods for providing nonadherent dough for baked goods. 4,374,863, Cl. 426-553.000.
Sawada, Naotoshi: *See—*
Shiratsuchi, Masami; Shimizu, Noboru; Shigyo, Hiromichi; Kyotani, Yoshinori; Kunieda, Hisashi; Kawamura, Kiyoshi; Sato, Seiichi; Akashi, Toshihiro; Nagakura, Masahiko; Sawada, Naotoshi; and Uchida, Yasumi, 4,374,840, Cl. 424-263.000.
Sawai, Kiyoshi; and Kawase, Takao, to Chisso Engineering Co. Ltd. Distillation for alcohol. 4,374,705, Cl. 203-19.000.
Schaefer, Frederic C.: *See—*
Singh, Balwant; and Schaefer, Frederic C., 4,374,987, Cl. 544-260.000.
Schechter, Michael M., to Ford Motor Company. Fuel injection pump with distributor type fuel control. 4,374,511, Cl. 123-448.000.
Schendel, Ronald L.; and Selleck, Frederic T., to Fluor Corporation. Process of separating acid gases from hydrocarbons. 4,374,657, Cl. 62-19.000.
Schenk, Hanspeter: *See—*
Givaudan Corporation; and Schenk, Hanspeter, 4,375,001, Cl. 560-128.000.
Schering Aktiengesellschaft: *See—*
Plum, Hans; and Schroeer, Ulrich, 4,374,778, Cl. 260-429.700.
Schering Corporation: *See—*
Mc Combie, Stuart W., 4,374,844, Cl. 424-270.000.
Schindler, Joachim: *See—*
Struve, Alfred; Hill, Frank F.; and Schindler, Joachim, 4,374,776, Cl. 260-397.250.
Schlemmer, Josef; and Konig, Adolf, to Josef Schlemmer GmbH. Pipe-form connector for cable ducts. 4,374,596, Cl. 285-305.000.
Schlig, Eugene S., to International Business Machines Corporation. Fast charge transfer analog-to-digital converter. 4,375,059, Cl. 340-347.0AD.
Schmelzer, Eugene; and Tagamolila, Constante P., to UOP Inc. Separation of hydrogen from a catalytic reforming zone effluent stream. 4,374,726, Cl. 208-101.000.
Schmidt, Helmut; Tunker, Gerhard; and Scholze, Horst, to Fraunhofer-Gesellschaft. Method of heat-sealing substrates. 4,374,696, Cl. 156-329.000.
Schmidt, Helmut: *See—*
Scholze, Horst; Schmidt, Helmut; and Bottner, Harald, 4,374,933, Cl. 521-64.000.
Schmidt, Manfred; Freitag, Dieter; and Bottenbruch, Ludwig, to Bayer Aktiengesellschaft. Process for the preparation of thermoplastic aromatic polyphosphonates with improved thermal ageing resistance. 4,374,971, Cl. 528-167.000.
Schmitt, Frederick L.: *See—*
Kiwala, Jacob; Tokarzewski, Richard J.; Schmitt, Frederick L.; and Sprecker, Mark A., 4,374,746, Cl. 252-174.110.
Schneider, Morris D., to Research Corp. Platelet aggregating material from equine arterial tissue. 4,374,830, Cl. 424-177.000.
Schoen, Ernst: *See—*
Decker, Walter; Schoen, Ernst; Grabhoefer, Herbert; and Weyland, Peter, 4,374,935, Cl. 521-173.000.
Schoen, Peter F.: *See—*
Ahlquist, C. Norman; Hu, Yaw Wen; Schoen, Peter F.; and Poenisch, Paul A., 4,374,915, Cl. 430-22.000.
Scholze, Horst; Schmidt, Helmut; and Bottner, Harald, to Fraunhofer-Gesellschaft. Method of preparation of porous membranes and adsorbents. 4,374,933, Cl. 521-64.000.
Scholze, Horst: *See—*
Schmidt, Helmut; Tunker, Gerhard; and Scholze, Horst, 4,374,696, Cl. 156-329.000.
Schrenker, Helge; and Hupe, Peter, to Hewlett-Packard GmbH. Apparatus for solvent degassing and solvent supply in liquid chromatographs. 4,374,656, Cl. 55-170.000.
Schroeer, Ulrich: *See—*
Plum, Hans; and Schroeer, Ulrich, 4,374,778, Cl. 260-429.700.
Schroeter, Siegfried H.: *See—*
Ashby, Bruce A.; and Schroeter, Siegfried H., 4,374,674, Cl. 106-287.120.
Schueneman, John E., to Coral Chemical Company. System for controlling the composition of chemical treatment baths. 4,374,681, Cl. 148-6.14R.
Schulz, Walther: *See—*
Lindorfer, Walter; Schulz, Walther; Wagner, Fritz; and Jahn-Held, Wilhelm, 4,374,735, Cl. 210-772.000.
Schwaegerl, Walter: *See—*
Braha, Alexandru; Daucher, Hans; Hess, Klaus; Kroetzsch, Peter; Merkel, Helmut; Roedl, Roland; Schwaegerl, Walter; and Stickel, Richard, 4,374,730, Cl. 210-608.000.
Scott, David B.; Davies, Roderick D.; and See, Yee-Chaung, to Texas Instruments Incorporated. Method of manufacturing silicide contacts for CMOS devices. 4,374,700, Cl. 156-656.000.
Scott, Edwin C. Security bars. 4,374,598, Cl. 292-259.00R.
Scott Machine Development Corporation: *See—*
Waldron, Gregory R., 4,374,887, Cl. 428-195.000.
Scott, Robert N.: *See—*
Renner, Jacqueline M.; Scott, Robert N.; and Gavin, David F., 4,374,986, Cl. 544-221.000.
Scotti, Carlo; Pace, Renato C.; and Carra', Sergio, to Montedison, S.p.A. Post-treated titanium dioxide and process for producing same. 4,374,675, Cl. 106-300.000.
Secord, Fanny E. P., executor: *See—*
Secord, Herbert C., deceased; and Secord, Fanny E. P., executor, 4,374,478, Cl. 73-863.310.
Secord, Herbert C., deceased; and by Secord, Fanny E. P., executor, to Ocean Phoenix Holdings NV. Storage tanks for liquids. 4,374,478, Cl. 73-863.310.
See, Yee-Chaung: *See—*
Scott, David B.; Davies, Roderick D.; and See, Yee-Chaung, 4,374,700, Cl. 156-656.000.
Seiko Koki Kabushiki Kaisha: *See—*
Nagaoka, Shinji; and Satoh, Koji, 4,374,615, Cl. 354-238.000.
Selleck, Frederic T.: *See—*
Schendel, Ronald L.; and Selleck, Frederic T., 4,374,657, Cl. 62-19.000.
Selving, Hans V. L.: *See—*
Sandgren, Kurt K.; and Selving, Hans V. L., 4,374,870, Cl. 427-120.000.
Senda, Jihei; Inoue, Yoshihiro; Uenishi, Toshiaki; Harada, Hidefumi; Nakata, Kouji; Akagi, Akio; and Yamasaki, Takanori, to Titan Kogyo K.K. Heat stable yellow iron oxides containing antimony. 4,374,676, Cl. 106-303.000.
Senda, Jihei; Inoue, Yoshihiro; Uenishi, Toshiaki; Harada, Hidefumi; Nakata, Kouji; and Akagi, Akio, to Titan Kogyo K.K. Japan. Preparation of improved heat stable yellow iron oxide pigments. 4,374,677, Cl. 106-309.000.
Sharp Kabushiki Kaisha: *See—*
Arai, Nobushige, 4,374,754, Cl. 252-430.000.
Kuwagaki, Hiroshi; Yano, Kozo; and Takechi, Sadatoshi, 4,374,610, Cl. 350-357.000.
Shave, David G.: *See—*
Thigpen, Ben B.; Crump, Eldon E.; and Shave, David G., 4,375,089, Cl. 367-20.000.
Shedd, Charles D.; and Stone, Allen L., to Uniroyal, Inc. Nitrile rubber-/EPDM graft blends. 4,374,952, Cl. 525-87.000.
Sheldahl, Inc.: *See—*
Petersen, Stephen K., 4,375,018, Cl. 200-5.00A.
Shell Oil Company: *See—*
Badmin, John S.; and Mears, Barry J., 4,374,833, Cl. 424-225.000.
Freye, Anne D.; and van Arkel, Johan A., 4,374,653, Cl. 55-18.000.
Shepherd, John A.: *See—*
Lehman, Richard L.; and Shepherd, John A., 4,374,817, Cl. 423-319.000.
Sherliker, Francis R.: *See—*
Nemcek, Jozef; Roberts, Thomas A.; and Sherliker, Francis R., 4,374,937, Cl. 523-116.000.
Sherritt Gordon Mines Limited: *See—*
Weir, Donald R.; Kerfoot, Derek G. E.; and Hofirek, Zdenek, 4,374,808, Cl. 423-42.000.
Shigyo, Hiromichi: *See—*
Shiratsuchi, Masami; Shimizu, Noboru; Shigyo, Hiromichi; Kyotani, Yoshinori; Kunieda, Hisashi; Kawamura, Kiyoshi; Sato, Seiichi; Akashi, Toshihiro; Nagakura, Masahiko; Sawada, Naotoshi; and Uchida, Yasumi, 4,374,840, Cl. 424-263.000.
Shimauchi, Hisaaki: *See—*
Ishimi, Hiroshi; Shimauchi, Hisaaki; and Tanaka, Chuzaburo, 4,374,807, Cl. 423-11.000.
Shimeki, Yasuharu: *See—*
Tsuji, Shiro; Matsushima, Hiroshi; Shimeki, Yasuharu; Kihara, Nobuyoshi; and Kato, Misao, 4,375,100, Cl. 371-38.000.
Shimizu, Chiyuki, to Toshiba Silicone Co., Ltd. Adhesive polyorganosiloxane composition. 4,374,950, Cl. 524-765.000.
Shimizu, Masato; Asoshina, Eishi; Tominaga, Takashi; and Muguruma, Tadahiro, to Nitto Electric Industrial Co., Ltd. Adhesive-sheet for

the reinforcement of metal plates and method of reinforcing metal plates. 4,374,890, Cl. 428-212.000.
Shimizu, Noboru: *See—*
Shiratsuchi, Masami; Shimizu, Noboru; Shigyo, Hiromichi; Kyotani, Yoshinori; Kunieda, Hisashi; Kawamura, Kiyoshi; Sato, Seiichi; Akashi, Toshihiro; Nagakura, Masahiko; Sawada, Naotoshi; and Uchida, Yasumi, 4,374,840, Cl. 424-263.000.
Shimizu, Taku: *See—*
Atsukawa, Masumi; Shinoda, Naoharu; Tatani, Atsushi; and Shimizu, Taku, 4,374,812, Cl. 423-242.000.
Shinkai, Kazuteru: *See—*
Kikuchi, Akira; Hagiya, Akio; Shinkai, Kazuteru; Kohno, Masaru; and Saito, Kiyoshi, 4,374,477, Cl. 73-861.180.
Shinoda, Naoharu: *See—*
Atsukawa, Masumi; Shinoda, Naoharu; Tatani, Atsushi; and Shimizu, Taku, 4,374,812, Cl. 423-242.000.
Shionogi & Co., Ltd.: *See—*
Hirai, Kentaro; Matsutani, Shigeru; Makino, Itsuo; and Ishiba, Teruyuki, 4,374,842, Cl. 424-269.000.
Shirahata, Kunikatsu: *See—*
Kasai, Masaji; Kono, Motomichi; and Shirahata, Kunikatsu, 4,374,774, Cl. 548-422.000.
Shiratsuchi, Masami; Shimizu, Noboru; Shigyo, Hiromichi; Kyotani, Yoshinori; Kunieda, Hisashi; Kawamura, Kiyoshi; Sato, Seiichi; Akashi, Toshihiro; Nagakura, Masahiko; Sawada, Naotoshi; and Uchida, Yasumi, to Kowa Company, Ltd. Certain phenyl or pyridylpropanol-amines containing alkyl-nitrate moieties. 4,374,840, Cl. 424-263.000.
Shiseido Company, Ltd.: *See—*
Ogasawara, Hirotake; Hatakeyama, Yoshiharu; and Ishiguro, Mitsuo, 4,374,796, Cl. 264-101.000.
Shoff, Daniel J., to Mattel, Inc. Digitally driven audio effects generator. 4,375,061, Cl. 340-384.00E.
Shoji, Takeshi: *See—*
Mitsuo, Toshiharu; Shoji, Takeshi; and Sanuki, Shin-ichi, 4,374,664, Cl. 75-58.000.
Showa Kagaku Kogyo Co., Ltd: *See—*
Suzuki, Kazuaki; and Kuwabara, Shohei, 4,374,643, Cl. 8-648.000.
Sibley, Murray J.; and Nite, Rebecca F., to Barnes-Hind Pharmaceuticals, Inc. Cleaning compositions. 4,374,745, Cl. 252-106.000.
Siemens Aktiengesellschaft: *See—*
Baumann, Heinz, 4,375,105, Cl. 378-092.000.
Dathe, Joachim, 4,375,008, Cl. 174-17.050.
Gerke, Peter; Arndt, Gerhard; Roescheisen, Friedrich; and Bruentrup, Heinrich, 4,375,098, Cl. 370-110.100.
Heinzl, Alfred; and Stadler, Heinz, 4,374,531, Cl. 141-82.000.
Heyneman, Guido, 4,374,582, Cl. 251-62.000.
Hudek, Karl, deceased; and Kusserow, Bernd, 4,374,524, Cl. 128-420.00A.
Simon, Jerome H. Light beam clock. 4,374,623, Cl. 368-79.000.
Sims, Larry A.: *See—*
Grossmann, Frederic; and Sims, Larry A., 4,374,520, Cl. 128-132.00D.
Sindo, Tiuzi; Obara, Tadashi; and Adachi, Hidenari, to Yamanouchi Pharmaceutical Co., Ltd. Water soluble extract from nonpathogenic aerobic corynebacteria. 4,374,827, Cl. 424-92.000.
Singer Company, The: *See—*
Ketterer, Stanley J., 4,374,503, Cl. 112-163.000.
Singh, Balwant; and Novak, Robert W., to American Cyanamid Company. Blocked isocyanate. 4,374,771, Cl. 260-239.30R.
Singh, Balwant; and Schaefer, Frederic C., to American Cyanamid Company. Process for the preparation of high purity methotrexate and derivatives thereof. 4,374,987, Cl. 544-260.000.
Singh, Raj N., to General Electric Company. Chemically polished ceramic body. 4,374,701, Cl. 156-667.000.
Sirbu, Victor: *See—*
Keilp, John P.; Moore, Warren F.; and Sirbu, Victor, 4,374,795, Cl. 264-152.000.
SK & F Lab Co.: *See—*
Labaw, Clifford S.; and Wellman, George R., 4,374,996, Cl. 548-342.000.
SKF Kugellagerfabriken GmbH: *See—*
Olschewski, Armin; Brandenstein, Manfred; Walter, Lothar; and Ernst, Horst M., 4,374,556, Cl. 192-98.000.
Sliemers, Francis A.: *See—*
Drauglis, Edmund; Wielonski, Roy F.; and Sliemers, Francis A., 4,374,717, Cl. 204-192.00C.
Slocombe, Robert J., to Monsanto Company. Aqueous polymeric latex coating compositions, products produced thereby, methods for preparing such compositions, and methods for using such compositions. 4,374,670, Cl. 106-20.000.
Small, Byron L.: *See—*
Cocco, Eugene R.; Pflugrad, William G.; and Small, Byron L., 4,375,012, Cl. 174-69.000.
Smith, Dale E.; and Pinter, Warren H., to United Technologies Corporation. Method and apparatus for filament winding. 4,374,689, Cl. 156-169.000.
Smith, Gerald D.: *See—*
Allain, Ronald J.; and Smith, Gerald D., 4,375,003, Cl. 564-492.000.
Smith, John R.; Bingle, William D.; and Austin, Lowell W., to National Steel Corporation. Nickel-zinc alloy coated steel sheet. 4,374,902, Cl. 428-621.000.
Smith Laboratories, Inc.: *See—*
Stern, Ivan J., 4,374,926, Cl. 435-23.000.
Smith, Michael A.: *See—*
Worthington, Ralph E.; Smith, Michael A.; and Tobias, John M., 4,374,805, Cl. 423-10.000.
Smith, Roger R.; and Celentino, James L., to United States of America, Army. Towbar assembly. 4,374,593, Cl. 280-491.00E.
Smith, Theodore D., to RCA Corporation. Calculator type keyboard including printed circuit board contacts and method of forming. 4,375,017, Cl. 200-5.00A.
SmithKline & French Laboratories Limited: *See—*
Durant, Graham J.; Ganellin, Charon R.; and Sach, George S., 4,374,839, Cl. 424-263.000.
Smolanoff, Joel R., to Rohm and Haas Company. 2,6-Dimethylpiperidinyl-N-carbobutoxymethyl urea. 4,374,991, Cl. 546-245.000.
Sninsky, John J.; and Cohen, Stanley N., to Leland Stanford Jr. University, The Board of Trustees of the. Extrachromosomal regulation of expression. 4,374,927, Cl. 435-68.000.
Snoke, Roy E.; and Goodhue, Charles T., to Eastman Kodak Company. Method for the purification of cholesterol oxidase. 4,374,930, Cl. 435-190.000.
Snow, S. Richard: *See—*
Kunkee, Ralph E.; Snow, S. Richard; and Rous, Craig, 4,374,859, Cl. 426-14.000.
Snyder, Fred W.: *See—*
Turbak, Albin F.; Snyder, Fred W.; and Sandberg, Karen R., 4,374,702, Cl. 162-100.000.
Snyder, William R.; and Feuerstein, Diane, to Betz Laboratories, Inc. Method for treating aqueous mediums. 4,374,733, Cl. 210-701.000.
Socapex: *See—*
Holvoet, Gerard; and Legrand, Jacques, 4,375,055, Cl. 335-56.000.
Societe Anonyme de Telecommunications: *See—*
Cointot, Denis; Langlois, Patrice; and de Passoz, Guy, 4,375,013, Cl. 179-15.55R.
Societe D'Assistance Technique Pour Produits Nestle S.A.: *See—*
Gasser, Rupert J.; and Badertscher, Ernest, 4,374,860, Cl. 426-28.000.
Hufnagel, Willi; Blanc, Maurice; and Balimann, Walter, 4,374,864, Cl. 426-594.000.
Societe E. Lacroix-Tous Artifices: *See—*
Maury, Louis, 4,374,494, Cl. 102-357.000.
Soder, Alfons: *See—*
Weber, Rolf-Ortwin; Soder, Alfons; and Boksay, Istvan, 4,374,990, Cl. 544-376.000.
Solic Co., Ltd.: *See—*
Yoshida, Kenji, 4,375,019, Cl. 200-52.00R.
Sonoco Products Company: *See—*
Horton, John D., 4,374,568, Cl. 229-5.500.
Sotheran, Arthur, to Rolls Royce Limited. Gas turbine engine. 4,374,466, Cl. 60-39.360.
Sparks, Colin R.: *See—*
Hilditch, Edward A.; Hambling, Robert E.; Sparks, Colin R.; and Walker, David A., 4,374,852, Cl. 424-289.000.
Speigel, Hubert: *See—*
Wuthrich, Hans-Rudolf; Speigel, Hubert; Lehner, Hermann; and Krebs, Peter, 4,375,023, Cl. 200-148.00R.
Spera, Claudio. Jib crane with polycentrical trajectory. 4,374,566, Cl. 212-199.000.
Sperry Corporation: *See—*
Viola, Raymond D.; and Hanley, Gerard L., 4,375,053, Cl. 333-116.000.
Spinelli, Richard A.; and Bock, Edward C., to Xerox Corporation. Variable magnification copying apparatus. 4,374,619, Cl. 355-57.000.
Sprecher & Schuh AG: *See—*
Wuthrich, Hans-Rudolf; Speigel, Hubert; Lehner, Hermann; and Krebs, Peter, 4,375,023, Cl. 200-148.00R.
Sprecker, Mark A., to International Flavors & Fragrances Inc. Norbornyl alkyl ethers. 4,375,004, Cl. 568-665.000.
Sprecker, Mark A.: *See—*
Kiwala, Jacob; Tokarzewski, Richard J.; Schmitt, Frederick L.; and Sprecker, Mark A., 4,374,746, Cl. 252-174.110.
Stadler, Heinz: *See—*
Heinzl, Alfred; and Stadler, Heinz, 4,374,531, Cl. 141-82.000.
Stahl, Fritz; and Steffen, Horst, to Kollmorgen Technologies Corporation. Method for producing printed circuit boards with punched holes having metallized walls. 4,374,868, Cl. 427-97.000.
Standard Oil Company, The: *See—*
Adams, Richard C.; and Waisala, Steven J., 4,374,948, Cl. 524-516.000.
Standard Oil Company (Indiana): *See—*
Weisrock, William P.; and Klein, Harriet S., 4,374,929, Cl. 435-104.000.
Westerman, Granval W.; and Otwell, Corbett I., 4,374,544, Cl. 166-252.000.
Starks, Charles M.: *See—*
Berge, Charles T.; Mack, Mark P.; and Starks, Charles M., 4,374,755, Cl. 252-431.00R.
Starr, James A.; and Steinert, Leopold A., to General Electric Company. Pool gateway seal. 4,375,104, Cl. 376-203.000.
Starun, Victor. Internal combustion engine having provisions for heating the fuel-air mixture prior to injection into the cylinders. 4,374,512, Cl. 123-556.000.
Stauffer Chemical Company: *See—*
Arzoumanidis, Gregory G.; and Darragh, Kirk V., 4,374,816, Cl. 423-304.000.
Stauft, Amos K. Spinal massage device. 4,374,519, Cl. 128-57.000.

Steady, Glendon T.: *See—*
Ashburn, Donald G.; and Steady, Glendon T., 4,374,944, Cl. 524-66.000.
Steffen, Horst: *See—*
Stahl, Fritz; and Steffen, Horst, 4,374,868, Cl. 427-97.000.
Stein, Reinhardt P., to American Home Products Corporation. Nitrosoamino-actonitriles. 4,374,779, Cl. 260-465.00E.
Steinbis, Fritz K., to Kollross, Gunter. Procedure and device for oiling the inside of tubular casings. 4,374,871, Cl. 427-236.000.
Steinert, Leopold A.: *See—*
Starr, James A.; and Steinert, Leopold A., 4,375,104, Cl. 376-203.000.
Stempeck, John W., to Polaroid Corporation. Auto/manual camera employing common lens focusing data. 4,374,613, Cl. 354-196.000.
Stepanov, Ivan A.: *See—*
Azbukin, Vladimir G.; Balandin, Jury F.; Gorynin, Igor V.; Gluskin, Lev Y.; Zvezdin, Jury I.; Ignatenko, Alexandr G.; Krasnov, Alexandr N.; Melekhov, Rostislav K.; Osipova, Inna S.; Pavlov, Valery N.; Khokhlov, Alexandr A.; Stepanov, Ivan A.; Anfimov, Alexandr F.; Ardentov, Vasily V.; Burmakin, Viktor M.; Ignatov, Viktor A.; Rokhlin, Eduard A.; and Zhitkov, Vladimir V., 4,374,680, Cl. 148-2.000.
Stephens, Thomas P.: *See—*
Fearnside, James T.; and Stephens, Thomas P., 4,375,009, Cl. 174-36.000.
Stephenson, Robert L.; and Pfeiffer, Robert C., to Allied Corporation. Mini seat belt buckle. 4,374,449, Cl. 24-230.0AL.
Stepien, Henryk M.: *See—*
Folkers, Karl; Kubiak, Teresa M.; Stepien, Henryk M.; and Sakura, Naoki, 4,374,828, Cl. 424-177.000.
Stern, Ivan J., to Smith Laboratories, Inc. Method for the production of improved chymopapain. 4,374,926, Cl. 435-23.000.
Stewart, Roy, to British Nuclear Fuels Limited. Pressing ceramic powders. 4,374,787, Cl. 264-0.500.
Stickel, Richard: *See—*
Braha, Alexandru; Daucher, Hans; Hess, Klaus; Kroetzsch, Peter; Merkel, Helmut; Roedl, Roland; Schwaegerl, Walter; and Stickel, Richard, 4,374,730, Cl. 210-608.000.
Stille, Larry, to David Manufacturing Company. Apparatus for controlling power delivery to a grain stirring device. 4,374,621, Cl. 366-261.000.
Stine, Jon D.: *See—*
Crowley Daniel J.; and Stine, Jon D., 4,375,071, Cl. 360-104.000.
Stockel, Richard F. Method of preparing snow and ice control compositions. 4,374,743, Cl. 252-70.000.
Stone, Allen L.: *See—*
Shedd, Charles D.; and Stone, Allen L., 4,374,952, Cl. 525-87.000.
Stora Kopparbergs Bergslags AB: *See—*
Collin, Per H.; and Bengtsson, Erik A., 4,374,663, Cl. 75-26.000.
Stormon, Harry J.: *See—*
Gurries, Raymond A.; and Stormon, Harry J., 4,374,602, Cl. 299-37.000.
Stortroen, Don J.; and Brown, Michael L. Apparatus for treating and disposing of bio-hazardous waste and solid waste. 4,374,491, Cl. 100-73.000.
Stout, James T.; and Wood, Prentice J., to Mead Corporation, The. Article carrier. 4,374,561, Cl. 206-188.000.
Stricker, Charles D.: *See—*
Bakewell, Frank W.; and Stricker, Charles D., 4,374,719, Cl. 204-202.000.
Strickland, Gordon E. Handle for tennis racket with anti-torsion grip portion. 4,374,589, Cl. 273-75.000.
Strobel, Rudolf G., to Procter & Gamble Company, The. Orange juice concentrate. 4,374,865, Cl. 426-599.000.
Struve, Alfred; Hill, Frank F.; and Schindler, Joachim, to Henkel Kommanditgesellschaft auf Aktien. Sterol concentrates, the preparation thereof, and their use in the transformation of sterols by fermentation. 4,374,776, Cl. 260-397.250.
Stubbens, Neil A.: *See—*
Ricketts, Martin W.; and Stubbens, Neil A., 4,375,079, Cl. 364-518.000.
Stuck, Earl N.; Pigney, Keith D.; and Gifford, Howard, to Teledyne Industries, Inc. Metallic particle generation device. 4,374,789, Cl. 264-12.000.
Sturm, Gary V., to International Business Machines Corporation. Aspirator for an ink jet printer. 4,375,062, Cl. 346-75.000.
Sugimoto, Osamu; Akagawa, Masaki; and Hayashi, Yukichi, to Kabushiki Kaisha Nippon Coinco. Coin changer for a vending machine. 4,374,557, Cl. 194-100.00A.
Sugimoto, Tadao: *See—*
Hirano, Shigeo; Sugimoto, Tadao; and Tsujino, Nobuyuki, 4,374,923, Cl. 430-410.000.
Sumeghy, Gabor, to IV. Ker. Epitoipari Szovetkezet. Process for producing a surface veneer on furniture and the like. 4,374,692, Cl. 156-244.110.
Sumida, Yasuji: *See—*
Sasaki, Koichi; Ishida, Hiroshi; Sumida, Yasuji; and Tanaka, Akira, 4,374,616, Cl. 355-3.0CH.
Sumitomo Chemical Company, Limited: *See—*
Konishi, Hiroyuki; Hino, Naganori; Matsumoto, Hiroshi; and Yoshida, Ryo, 4,374,662, Cl. 71-103.000.
Sumitomo Electric Industry, Ltd.: *See—*
Hara, Akio; and Yazu, Shuji, 4,374,900, Cl. 428-551.000.
Sumitomo Metal Industries, Ltd.: *See—*
Koike, Masao; Hayashi, Yutaka; and Ogaya, Masayoshi, 4,374,683, Cl. 148-12.0EA.
Sumitomo Metal Mining Company Ltd.: *See—*
Ishimi, Hiroshi; Shimauchi, Hisaaki; and Tanaka, Chuzaburo, 4,374,807, Cl. 423-11.000.
Suzuki, Junichiro; and Tanaka, Hiroshi, to NGK Spark Plug Co., Ltd. Method of making a coated cutting tip. 4,374,685, Cl. 148-126.100.
Suzuki, Kazuaki; and Kuwabara, Shohei, to Showa Kagaku Kogyo Co., Ltd. Color salts of basic dyes with acidic optical brighteners of stilbene type. 4,374,643, Cl. 8-648.000.
Suzuki, Takashi: *See—*
Matsumura, Susumu; and Suzuki, Takashi, 4,374,612, Cl. 354-53.000.
Svensson, Sven A., to Mo och Domsjo Aktiebolag. Apparatus for debarking logs and cut timber. 4,374,533, Cl. 144-208.00B.
Swank, Robert K.: *See—*
Cusano, Dominic A.; Swank, Robert K.; and White, Philip J., 4,374,749, Cl. 252-301.360.
Sweeney, W. Alan, to Chevron Research Company. Motor fuel composition. 4,374,648, Cl. 44-56.000.
Syska, Andrew J.: *See—*
Massey, Lester G.; Clawson, Lawrence G.; and Syska, Andrew J., 4,374,540, Cl. 165-1.000.
Syva Company: *See—*
Litman, David J.; Harel, Zvi; and Ullman, Edwin F., 4,374,925, Cl. 435-7.000.
Szala, Lawrence E.: *See—*
Lee, Minyoung; and Szala, Lawrence E., 4,374,651, Cl. 51-309.000.
Szente, Andre: *See—*
Branca, Quirico; Fischli, Albert E.; and Szente, Andre, 4,374,773, Cl. 260-245.500.
Szymonifka, Michael J.: *See—*
Christensen, Burton G.; Heck, James V.; and Szymonifka, Michael J., 4,374,848, Cl. 424-274.000.
T. C. Manufacturing Company, Inc.: *See—*
Blitstein, John; and Kathrein, Donald, 4,374,874, Cl. 427-379.000.
Tabei, Koichi: *See—*
Takahashi, Takeo; and Tabei, Koichi, 4,374,727, Cl. 209-127.00B.
Taga, Akio: *See—*
Ikeda, Eiji; Adachi, Tomohiro; Ito, Yoshihiro; Yamada, Ryozo; Taga, Akio; and Takashima, Shigeo, 4,374,695, Cl. 156-293.000.
Tagamolila, Constante P.: *See—*
Schmelzer, Eugene; and Tagamolila, Constante P., 4,374,726, Cl. 208-101.000.
Tai, Ho T., to Lever Brothers Company. Bleach products. 4,374,747, Cl. 252-186.260.
Tajima Roofing Co., Ltd.: *See—*
Yamamoto, Kaname, 4,374,687, Cl. 156-71.000.
Takagi Manufacturing Co., Ltd.: *See—*
Ueno, Eishin; and Kikuchi, Sho, 4,374,548, Cl. 180-79.000.
Takagi, Takashi, to Morishita Pharmaceutical Co., Ltd. Method for producing gamma-globulin for use in intravenous administration and method for producing a pharmaceutical preparation thereof. 4,374,763, Cl. 260-112.00B.
Takahashi, Shinya, to Pioneer Electronic Corporation. Intermusic detecting circuit for automatic music selecting device. 4,375,093, Cl. 369-41.000.
Takahashi, Takeo; and Tabei, Koichi, to Fuji Electric Co., Ltd. Electrostatic sorting apparatus. 4,374,727, Cl. 209-127.00B.
Takahashi, Yoshikazu: *See—*
Umezawa, Hamao; Takeuchi, Tomio; Tatsuta, Kuniaki; and Takahashi, Yoshikazu, 4,374,980, Cl. 536-6.400.
Takami, Akio; Saito, Thutomu; and Tanaka, Kazutoshi, to NGK Spark Plug Co., Ltd. Process for producing a gas detecting element. 4,374,456, Cl. 29-588.000.
Takami, Akio; and Kondo, Kazuo, to NGK Spark Plug Co., Ltd. Powder having a negative coefficient of linear thermal expansion and a composition containing the same. 4,374,942, Cl. 523-210.000.
Takashima, Shigeo: *See—*
Ikeda, Eiji; Adachi, Tomohiro; Ito, Yoshihiro; Yamada, Ryozo; Taga, Akio; and Takashima, Shigeo, 4,374,695, Cl. 156-293.000.
Take, Yoshiaki: *See—*
Tsuzuki, Kiyoshi; Tanaka, Sigeto; and Take, Yoshiaki, 4,374,697, Cl. 156-580.200.
Takechi, Sadatoshi: *See—*
Kuwagaki, Hiroshi; Yano, Kozo; and Takechi, Sadatoshi, 4,374,610, Cl. 350-357.000.
Takeda Chemical Industries, Ltd.: *See—*
Tsuda, Masahiko; Ohta, Kazuhiko; and Nara, Kiyoshi, 4,374,981, Cl. 536-24.000.
Takemura, Yoshifumi; and Miyazaki, Hirokazu, to Aoi Chemical Inc. Concrete joint sealant. 4,374,946, Cl. 524-271.000.
Takeshita, Isao; and Hozumi, Shiro, to Matsushita Electric Industrial Company. Absorption type refrigeration system including compressor driven auxiliary flow circuits isolated from main circuit. 4,374,468, Cl. 62-333.000.
Takeuchi, Tomio: *See—*
Umezawa, Hamao; Takeuchi, Tomio; Tatsuta, Kuniaki; and Takahashi, Yoshikazu, 4,374,980, Cl. 536-6.400.
Tallback, Gote: *See—*
Magnusson, Harry; Tallback, Gote; and Wennberg, Ake, 4,375,076, Cl. 363-68.000.
Tanaka, Akira: *See—*
Sasaki, Koichi; Ishida, Hiroshi; Sumida, Yasuji; and Tanaka, Akira, 4,374,616, Cl. 355-3.0CH.
Tanaka, Chuzaburo: *See—*
Ishimi, Hiroshi; Shimauchi, Hisaakj; and Tanaka, Chuzaburo, 4,374,807, Cl. 423-11.000.

Tanaka, Hiroshi: *See—*
Suzuki, Junichiro; and Tanaka, Hiroshi, 4,374,685, Cl. 148-126.100.
Tanaka, Kazutoshi: *See—*
Takami, Akio; Saito, Thutomu; and Tanaka, Kazutoshi, 4,374,456, Cl. 29-588.000.
Tanaka, Masanori: *See—*
Kobayashi, Osamu; and Tanaka, Masanori, 4,374,529, Cl. 133-4.00A.
Tanaka, Sigeto: *See—*
Tsuzuki, Kiyoshi; Tanaka, Sigeto; and Take, Yoshiaki, 4,374,697, Cl. 156-580.200.
Tanouchi, Tadao; Kawamura, Masanori; and Hayashi, Masaki, to Kissei Pharmaceutical Co.; and Ono Pharmaceutical Co., Ltd. 1-(7-Carboxy-2-octynyl)imidazole derivatives, pharmaceutical compositions and use. 4,374,845, Cl. 424-273.00R.
Tappe, Horst; Mayer, Hans; and Hofmann, Klaus, to Cassella Aktiengesellschaft. Dyeing-stable modification of a disperse dyestuff, processes for its preparation and use. 4,374,640, Cl. 8-526.000.
Tatani, Atsushi: *See—*
Atsukawa, Masumi; Shinoda, Naoharu; Tatani, Atsushi; and Shimizu, Taku, 4,374,812, Cl. 423-242.000.
Tatsuta, Kuniaki: *See—*
Umezawa, Hamao; Takeuchi, Tomio; Tatsuta, Kuniaki; and Takahashi, Yoshikazu, 4,374,980, Cl. 536-6.400.
Taylor, Chester J.; and Hinkley, Carl O., to United States of America, Army. Vehicle cargo box cover. 4,374,601, Cl. 296-63.000.
Technicare Corporation: *See—*
McBride, Thomas R., 4,375,068, Cl. 358-111.000.
Teepak, Inc.: *See—*
Martinek, Thomas W., 4,374,447, Cl. 17-1.00R.
Teledyne Industries, Inc.: *See—*
Stuck, Earl N.; Pigney, Keith D.; and Gifford, Howard, 4,374,789, Cl. 264-12.000.
Telefonaktiebolaget L M Ericsson: *See—*
Sandgren, Kurt K.; and Selving, Hans V. L., 4,374,870, Cl. 427-120.000.
Tell, Benjamin: *See—*
Nahory, Robert E.; and Tell, Benjamin, 4,374,867, Cl. 427-38.000.
Tellabs, Inc.: *See—*
Chambers, Charles W., Jr., 4,375,015, Cl. 179-170.0NC.
Terumo Corporation: *See—*
Fukasawa, Hiromichi, 4,374,802, Cl. 422-48.000.
Texas Instruments Incorporated: *See—*
Castro, Carlos A., 4,374,678, Cl. 148-1.500.
Scott, David B.; Davies, Roderick D.; and See, Yee-Chaung, 4,374,700, Cl. 156-656.000.
Ulug, Mehmet E., 4,375,097, Cl. 370-94.000.
Theall, C. Earle, to Perkin-Elmer Corporation, The. Automatic impedance matching between source and load. 4,375,051, Cl. 333-17.00M.
Thelen, Robert L.: *See—*
Rouse, Michael W.; and Thelen, Robert L., 4,374,573, Cl. 241-101.700.
Theodore, Ares N.: *See—*
Labana, Santokh S.; and Theodore, Ares N., 4,374,954, Cl. 525-207.000.
Theriot, Ned B. Portable glue applicator. 4,374,505, Cl. 118-40.000.
Thermo Electron Corporation: *See—*
Sakhuja, Ravinder K.; Cole, William E.; and Pavlakis, Dimitris, 4,374,660, Cl. 65-335.000.
Thigpen, Ben B.; Crump, Eldon E.; and Shave, David G., to Western Geophysical Company of America. Depth transducer system for a seismic streamer cable. 4,375,089, Cl. 367-20.000.
Thoma, Donald E., to GTE Automatic Electric Labs Inc. Data transfer control circuit. 4,375,078, Cl. 364-200.000.
Thomanek, Franz R. Warhead for antitank missiles featuring a shaped charge. 4,374,495, Cl. 102-476.000.
Thompson, Don D.; Brown, Robert J. S.; and Runge, Richard J., to Chevron Research Company. Method for interpreting seismic records to yield indications of gas/oil in an earth formation such as a sandstone, limestone, or dolostone. 4,375,090, Cl. 367-73.000.
Thompson, Malcolm J.: *See—*
Hunt, LaWanda M.; Thompson, Malcolm J.; and Robbins, William E., 4,374,850, Cl. 424-274.000.
Hunt, LaWanda M.; Thompson, Malcolm J.; and Robbins, William E., 4,374,851, Cl. 424-285.000.
Tillander, Bengt S. R. Cork mounting apparatus. 4,374,464, Cl. 53-324.000.
Timex Corporation: *See—*
Grand Chavin, Paul, 4,375,049, Cl. 318-696.000.
Titan Kogyo K.K.: *See—*
Senda, Jihei; Inoue, Yoshihiro; Uenishi, Toshiaki; Harada, Hidefumi; Nakata, Kouji; Akagi, Akio; and Yamasaki, Takanori, 4,374,676, Cl. 106-303.000.
Titan Kogyo K.K. Japan: *See—*
Senda, Jihei; Inoue, Yoshihiro; Uenishi, Toshiaki; Harada, Hidefumi; Nakata, Kouji; and Akagi, Akio, 4,374,677, Cl. 106-309.000.
Tittert, Curt, to Braun Aktiengesellschaft. Rotary ignition system for a catalytically heated curling device. 4,374,528, Cl. 132-37.00R.
Tobias, John M.: *See—*
Worthington, Ralph E.; Smith, Michael A.; and Tobias, John M., 4,374,805, Cl. 423-10.000.
Tokarzewski, Richard J.: *See—*
Kiwala, Jacob; Tokarzewski, Richard J.; Schmitt, Frederick L.; and Sprecker, Mark A., 4,374,746, Cl. 252-174.110.
Tokyo Shibaura Denki Kabushiki Kaisha: *See—*
Omura, Hideo; and Horino, Shigeo, 4,374,463, Cl. 53-54.000.
Urushibata, Yukio, 4,375,084, Cl. 364-900.000.
Toman, George M.; Bock, Thomas J.; and Bhatia, Chandrakant, to Union Special Corporation. Mechanism generating helical motion. 4,374,502, Cl. 112-162.000.
Tominaga, Takashi: *See—*
Shimizu, Masato; Asoshina, Eishi; Tominaga, Takashi; and Muguruma, Tadahiro, 4,374,890, Cl. 428-212.000.
Tomioka, Kentaro; Hirota, Kazuo; Muramatsu, Hiroaki; and Akahane, Shoji, to G-C Dental Industrial Corp. Liquid of acrylic copolymer and tetrahydrofurantetracarboxylic acid for setting dental cements. 4,374,936, Cl. 523-116.000.
Toothill, Richard B.; and Aloia, Romeo R., to American Cyanamid Company. Method for the thermal stabilization of sulfur-vulcanizable elastomers of thiodiethanol. 4,374,947, Cl. 524-398.000.
Topfer, Hans J.: *See—*
Papst, Gero; Ropke, Gunther; and Topfer, Hans J., 4,374,585, Cl. 266-81.000.
Toppan Printing Co., Ltd.: *See—*
Tsuzuki, Kiyoshi; Tanaka, Sigeto; and Take, Yoshiaki, 4,374,697, Cl. 156-580.200.
Toriuchi, Masaharu, to Fuji Photo Film Co., Ltd. Diffusion transfer color photographic element with U.V. absorbing agent adjacent protective layer. 4,374,919, Cl. 430-220.000.
Toriya, Itsuki: *See—*
Yokoyama, Shigeki; Kishimoto, Shinzo; Toriya, Itsuki; and Nakamura, Taku, 4,374,924, Cl. 430-528.000.
Toro Company, The: *See—*
Comer, Robert C., 4,374,465, Cl. 56-12.700.
Toshiba Silicone Co., Ltd.: *See—*
Shimizu, Chiyuki, 4,374,950, Cl. 524-765.000.
Toth, John E.: *See—*
Miller, Gregory E.; and Toth, John E., 4,374,564, Cl. 209-583.000.
Towae, Friedrich: *See—*
Merger, Franz; Towae, Friedrich; and Harder, Wolfgang, 4,375,000, Cl. 560-25.000.
Towsend, Marvin S. Anti-static shoe sole. 4,374,460, Cl. 36-30.00R.
Toyota Jidosha Kogyo Kabushiki Kaisha: *See—*
Kawabata, Takakazu; and Hino, Seigo, 4,374,509, Cl. 123-146.50A.
Trembly, Gray C.: *See—*
Goldberg, Ernest; Trembly, Gray C.; and Zarr, William A., 4,374,492, Cl. 102-220.000.
Trementozzi, Quirino A.: *See—*
Lee, Yoon C., deceased; Deets, Gary L.; and Trementozzi, Quirino A., 4,374,951, Cl. 525-73.000.
Tri-State Oil Tool Industries, Inc.: *See—*
Richardson, Charles N., 4,374,543, Cl. 166-192.000.
Tristram, Edward W.: *See—*
Harris, Elbert E.; Patchett, Arthur A.; Tristram, Edward W.; and Wyvratt, Matthew J., 4,374,829, Cl. 424-177.000.
Trzecieski, Jan, to Kirk Chemicals A/S. Lactose-reduced ice cream and process for the production thereof. 4,374,861, Cl. 426-42.000.
Tsuda, Hiroshi: *See—*
Fukunaga, Yukio; and Tsuda, Hiroshi, 4,374,603, Cl. 339-17.00F.
Tsuda, Masahiko; Ohta, Kazuhiko; and Nara, Kiyoshi, to Takeda Chemical Industries, Ltd. Ultrafiltration of fermentation broth containing nucleosides to separate inosine and guanosine from the broth. 4,374,981, Cl. 536-24.000.
Tsuji, Shiro; Matsushima, Hiroshi; Shimeki, Yasuharu; Kihara, Nobuyoshi; and Kato, Misao, to Matsushita Electric Industrial Company, Limited. Method and apparatus for encoding low redundancy check words from source data. 4,375,100, Cl. 371-38.000.
Tsujino, Nobuyuki: *See—*
Hirano, Shigeo; Sugimoto, Tadao; and Tsujino, Nobuyuki, 4,374,923, Cl. 430-410.000.
Tsurutani, Ryoichi: *See—*
Kudo, Kazushige; Arai, Yoshihiro; Tsurutani, Ryoichi; and Kiriyama, Shun-ichi, 4,374,961, Cl. 525-439.000.
Tsuzuki, Kiyoshi; Tanaka, Sigeto; and Take, Yoshiaki, to Toppan Printing Co., Ltd. Container, and method and device for manufacturing the same. 4,374,697, Cl. 156-580.200.
Tucholski, Gary R., to Union Carbide Corporation. Seals for electrochemical cells. 4,374,909, Cl. 429-174.000.
Tunker, Gerhard: *See—*
Schmidt, Helmut; Tunker, Gerhard; and Scholze, Horst, 4,374,696, Cl. 156-329.000.
Turbak, Albin F.; Snyder, Fred W.; and Sandberg, Karen R., to International Telephone and Telegraph Corporation. Microfibrillated cellulose. 4,374,702, Cl. 162-100.000.
Tzikas, Athanassios, to Ciba-Geigy AG. Process for the manufacture of dianthraquinonyl-N,N'-dihydroazine. 4,374,989, Cl. 544-339.000.
Uchida, Yasumi: *See—*
Shiratsuchi, Masami; Shimizu, Noboru; Shigyo, Hiromichi; Kyotani, Yoshinori; Kunieda, Hisashi; Kawamura, Kiyoshi; Sato, Seiichi; Akashi, Toshihiro; Nagakura, Masahiko; Sawada, Naotoshi; and Uchida, Yasumi, 4,374,840, Cl. 424-263.000.
Uchida, Yasuo, to Omron Tateisi Electronics Co. Transaction processing system. 4,375,032, Cl. 235-380.000.
Uclaf, Roussel: *See—*
Heymes, Rene; and Lutz, Andre, 4,374,834, Cl. 424-246.000.
Ueda, Atsushi: *See—*
Komurasaki, Satoshi; Ueda, Atsushi; and Yamane, Tsuneo, 4,374,510, Cl. 123-418.000.

Uenishi, Toshiaki: *See—*
Senda, Jihei; Inoue, Yoshihiro; Uenishi, Toshiaki; Harada, Hidefumi; Nakata, Kouji; Akagi, Akio; and Yamasaki, Takanori, 4,374,676, Cl. 106-303.000.
Senda, Jihei; Inoue, Yoshihiro; Uenishi, Toshiaki; Harada, Hidefumi; Nakata, Kouji; and Akagi, Akio, 4,374,677, Cl. 106-309.000.
Ueno, Eishin; and Kikuchi, Sho, to Takagi Manufacturing Co., Ltd. Playing vehicle with a prime mover. 4,374,548, Cl. 180-79.000.
Uhde GmbH: *See—*
Olinger, Rainer; and van den Bossche, Andre, 4,374,762, Cl. 252-631.000.
Ullman, Edwin F.: *See—*
Litman, David J.; Harel, Zvi; and Ullman, Edwin F., 4,374,925, Cl. 435-7.000.
Ulug, Mehmet E., to Texas Instruments Incorporated. Transparent intelligent network for data and voice. 4,375,097, Cl. 370-94.000.
Umezawa, Hamao; Takeuchi, Tomio; Tatsuta, Kuniaki; and Takahashi, Yoshikazu, to Zaidan Hojin Biseibutsu Kagaku Kenkyu Kai. 3'-Deamino-3'-morpholino carminomycin. 4,374,980, Cl. 536-6.400.
Union Carbide Corporation: *See—*
Argento, Benny J.; Walker, Wellington E., deceased; and Fiato, Rocco A., 4,374,752, Cl. 252-429.00R.
Barnabeo, Austin E., 4,374,958, Cl. 525-384.000.
Fan, You-Ling, 4,374,875, Cl. 427-386.000.
Fritz, Charles D.; Evans, Wilbur F.; and Cooke, Anson R., 4,374,661, Cl. 71-86.000.
Harlan, George M., 4,374,882, Cl. 428-36.000.
Tucholski, Gary R., 4,374,909, Cl. 429-174.000.
Williams, Thomas C., 4,374,943, Cl. 523-211.000.
Union Special Corporation: *See—*
Toman, George M.; Bock, Thomas J.; and Bhatia, Chandrakant, 4,374,502, Cl. 112-162.000.
Uniroyal, Inc.: *See—*
Shedd, Charles D.; and Stone, Allen L., 4,374,952, Cl. 525-87.000.
United States of America
Agriculture: *See—*
Hunt, LaWanda M.; Thompson, Malcolm J.; and Robbins, William E., 4,374,850, Cl. 424-274.000.
Hunt, LaWanda M.; Thompson, Malcolm J.; and Robbins, William E., 4,374,851, Cl. 424-285.000.
Air Force: *See—*
Baucom, Keith B.; and Hamon, Burrell N., 4,374,715, Cl. 204-158.00R.
Army: *See—*
Ek, Eric M., 4,375,044, Cl. 315-5.380.
Kearney, Frank W., 4,375,026, Cl. 219-130.010.
Lohrmann, Dieter R., 4,375,082, Cl. 364-851.000.
Smith, Roger R.; and Celentino, James L., 4,374,593, Cl. 280-491.00E.
Taylor, Chester J.; and Hinkley, Carl O., 4,374,601, Cl. 296-63.000.
Zeto, Robert J.; and Zimmerman, Franz X., 4,375,027, Cl. 219-390.000.
Navy: *See—*
Allcock, Harry R.; and Harris, Paul J., 4,374,781, Cl. 260-543.0PN.
Brown, Michael A.; and Kalivretenos, Chris A., 4,374,577, Cl. 244-3.210.
Desai, Jaydev D.; and Moffatt, William G., 4,374,668, Cl. 420-507.000.
Henry, Ronald A.; and Adicoff, Arnold, 4,374,777, Cl. 260-414.000.
Koon, Norman C., 4,374,665, Cl. 75-123.00E.
U.S. Philips Corporation: *See—*
Bouma, Herman; Bouwhuis, Dominicus G.; Boers, Paulus M.; and Jacobs, Josephus C., 4,375,058, Cl. 340-146.30Z.
de Haan, Maarten R.; Compaan, Klaas; and Hissel, Leopold H., 4,375,088, Cl. 365-234.000.
Jochems, Pieter J. W., 4,374,454, Cl. 29-571.000.
Koorneef, Jacob, 4,374,452, Cl. 445-66.000.
Sanders, Jozef A. M.; Sanders, Franciscus H. M.; Kalter, Hendrikus; and van de Ven, Everhardus P. G. T., 4,374,698, Cl. 156-643.000.
Sanders, Jozef A. M.; and Sanders, Franciscus H. M., 4,374,699, Cl. 156-643.000.
Van Daal, Andreas J. W., 4,375,102, Cl. 375-94.000.
United States Steel Corporation: *See—*
Ashburn, Donald G.; and Steady, Glendon T., 4,374,944, Cl. 524-66.000.
Bakewell, Frank W.; and Stricker, Charles D., 4,374,719, Cl. 204-202.000.
United Technologies Corporation: *See—*
Breault, Richard D.; and Goller, Glen J., 4,374,906, Cl. 429-44.000.
Ferrar, Carl M., 4,374,901, Cl. 428-607.000.
Rannenberg, George C., 4,374,469, Cl. 62-402.000.
Smith, Dale E.; and Pinter, Warren H., 4,374,689, Cl. 156-169.000.
Unitika Limited: *See—*
Kudo, Kazushige; Arai, Yoshihiro; Tsurutani, Ryoichi; and Kiriyama, Shun-ichi, 4,374,961, Cl. 525-439.000.
University of California, The Regents of The: *See—*
Kunkee, Ralph E.; Snow, S. Richard; and Rous, Craig, 4,374,859, Cl. 426-14.000.
University of Kansas Endowment Association, The: *See—*
Mitscher, Lester A., 4,374,979, Cl. 536-6.400.
UOP Inc.: *See—*
Schmelzer, Eugene; and Tagamolila, Constante P., 4,374,726, Cl. 208-101.000.
Vickers, Anthony G.; Hammershaimb, Harold U.; and Hemler, Charles L., Jr., 4,374,750, Cl. 252-417.000.
Upjohn Company, The: *See—*
Farrissey, William J.; McLaughlin, Alexander; and Waszeclak, Douglas P., 4,374,791, Cl. 264-39.000.
Ruwart, Mary J., 4,374,856, Cl. 424-317.000.
Uranium Recovery Corporation: *See—*
Worthington, Ralph E.; Smith, Michael A.; and Tobias, John M., 4,374,805, Cl. 423-10.000.
Urbain, Claire, legal representative: *See—*
Descamps, Marcel; Urbain, Marcel, deceased; Urbain, Claire, legal representative; Urbain, Jacques J. Z., legal representative; Urbain, Jean P. M. C., legal representative; and Urbain, Nadine C. J., legal representative, 4,374,841, Cl. 424-263.000.
Urbain, Jacques J. Z., legal representative: *See—*
Descamps, Marcel; Urbain, Marcel, deceased; Urbain, Claire, legal representative; Urbain, Jacques J. Z., legal representative; Urbain, Jean P. M. C., legal representative; and Urbain, Nadine C. J., legal representative, 4,374,841, Cl. 424-263.000.
Urbain, Jean P. M. C., legal representative: *See—*
Descamps, Marcel; Urbain, Marcel, deceased; Urbain, Claire, legal representative; Urbain, Jacques J. Z., legal representative; Urbain, Jean P. M. C., legal representative; and Urbain, Nadine C. J., legal representative, 4,374,841, Cl. 424-263.000.
Urbain, Marcel, deceased: *See—*
Descamps, Marcel; Urbain, Marcel, deceased; Urbain, Claire, legal representative; Urbain, Jacques J. Z., legal representative; Urbain, Jean P. M. C., legal representative; and Urbain, Nadine C. J., legal representative, 4,374,841, Cl. 424-263.000.
Urbain, Nadine C. J., legal representative: *See—*
Descamps, Marcel; Urbain, Marcel, deceased; Urbain, Claire, legal representative; Urbain, Jacques J. Z., legal representative; Urbain, Jean P. M. C., legal representative; and Urbain, Nadine C. J., legal representative, 4,374,841, Cl. 424-263.000.
Urushibata, Yukio, to Tokyo Shibaura Denki Kabushiki Kaisha. Digital input apparatus. 4,375,084, Cl. 364-900.000.
van Arkel, Johan A.: *See—*
Freye, Anne D.; and van Arkel, Johan A., 4,374,653, Cl. 55-18.000.
Van Daal, Andreas J. W., to U.S. Philips Corporation. Digital code word detection. 4,375,102, Cl. 375-94.000.
Vanden Bergh, Jan D., to Minnesota Mining and Manufacturing Company. Material and method for forming pressure transferable graphics. 4,374,691, Cl. 156-234.000.
van den Bossche, Andre: *See—*
Olinger, Rainer; and van den Bossche, Andre, 4,374,762, Cl. 252-631.000.
Van Der Puy, Michael: *See—*
Anello, Louis G.; Van Der Puy, Michael; Robinson, Martin A.; and Eibeck, Richard E., 4,374,782, Cl. 260-544.00F.
van de Ven, Everhardus P. G. T.: *See—*
Sanders, Jozef A. M.; Sanders, Franciscus H. M.; Kalter, Hendrikus; and van de Ven, Everhardus P. G. T., 4,374,698, Cl. 156-643.000.
Van Fisk, James, Jr.; and Jordan, John W., to NL Industries, Inc. Mold wash composition. 4,374,939, Cl. 523-139.000.
van Velthoven, Armand J., to NCR Corporation. Volatile/non-volatile dynamic RAM system. 4,375,086, Cl. 365-149.000.
van Zelm, Willem D. Lock-type gripping device for handicapped persons. 4,374,600, Cl. 294-19.00R.
Veeder Industries Inc.: *See—*
Devanney, Raymond H., 4,375,030, Cl. 235-61.00L.
Veillette, Norman T.; Pian, Charles H. C.; and Ashour, Tahsin A., to Nashua Corporation. Thermally stable liquid negative developer. 4,374,918, Cl. 430-115.000.
Verhelst, Willem F.; and Wiersum, Ulfert E., to Akzona Incorporated. Process for the degradation of polymers. 4,374,938, Cl. 523-124.000.
Vesterberg, Olof A. Y., to C. Desaga GmbH Nachf. Erich Fecht. Apparatus for electrophoresis. 4,374,723, Cl. 204-299.00R.
Vetco Offshore, Inc.: *See—*
Fraser, Thomas A., Jr., 4,374,630, Cl. 405-224.000.
Vickers, Anthony G.; Hammershaimb, Harold U.; and Hemler, Charles L., Jr., to UOP Inc. Fluid catalyst regeneration process and apparatus. 4,374,750, Cl. 252-417.000.
Video Education, Inc.: *See—*
Cerracchio, Nicholas, 4,375,101, Cl. 371-69.000.
Villanueva, Raul. Electronic device for pneumomassage to reduce lymphedema. 4,374,518, Cl. 128-64.000.
Viola, Raymond D.; and Hanley, Gerard L., to Sperry Corporation. Interlevel stripline coupler. 4,375,053, Cl. 333-116.000.
Volante, Ralph P.: *See—*
Hazen, George G.; Volante, Ralph P.; and Wilson, Kenneth E., 4,374,772, Cl. 260-245.20T.
Voll, Walter. Remote control circuit. 4,375,106, Cl. 455-603.000.
W. R. Grace & Co.: *See—*
Morgan, Charles R.; and Kyle, David R., 4,374,963, Cl. 525-486.000.
Wagner, Fritz: *See—*
Lindorfer, Walter; Schulz, Walther; Wagner, Fritz; and Jahn-Held, Wilhelm, 4,374,735, Cl. 210-772.000.
Wahmi, Hakeem V. R., to Mathur, Krishan Dyal. Dentifrice. 4,374,824, Cl. 424-58.000.

Waisala, Steven J.: *See—*
Adams, Richard C.; and Waisala, Steven J., 4,374,948, Cl. 524-516.000.
Waldron, Gregory R., to Scott Machine Development Corporation. Sign making apparatus. 4,374,887, Cl. 428-195.000.
Walker, David A.: *See—*
Hilditch, Edward A.; Hambling, Robert E.; Sparks, Colin R.; and Walker, David A., 4,374,852, Cl. 424-289.000.
Walker, Derek: *See—*
Cundall, Robert L.; and Walker, Derek, 4,374,982, Cl. 544-16.000.
Walker, Maxine M., executrix: *See—*
Argento, Benny J.; Walker, Wellington E., deceased; and Fiato, Rocco A., 4,374,752, Cl. 252-429.00R.
Walker, Wellington E., deceased: *See—*
Argento, Benny J.; Walker, Wellington E., deceased; and Fiato, Rocco A., 4,374,752, Cl. 252-429.00R.
Walling, John B. Flexible production tubing. 4,374,530, Cl. 138-110.000.
Walls, John E., to American Hoechst Corporation. Electrolytic graining of aluminum with nitric and oxalic acids. 4,374,710, Cl. 204-33.000.
Walter, Lothar: *See—*
Olschewski, Armin; Brandenstein, Manfred; Walter, Lothar; and Ernst, Horst M., 4,374,556, Cl. 192-98.000.
Wanat, Stanley F.; and Hsieh, Shane, to American Hoechst Corporation. Positive developer containing non-ionic surfactants. 4,374,920, Cl. 430-331.000.
Wandel, Dietmar: *See—*
Koschinek, Gunter; and Wandel, Dietmar, 4,374,797, Cl. 264-210.300.
Wanlass, Frank M., to Hughes Aircraft Company. Electrically erasable programmable read only memory. 4,375,087, Cl. 365-218.000.
Ward, William J., III, to General Electric Company. Ultrathin polymer membranes. 4,374,891, Cl. 428-220.000.
Warner-Lambert Company: *See—*
Glass, Michael; and Cea, Theresa, 4,374,858, Cl. 426-5.000.
Warren, Gilbert G.; and Johnson, Colin A., to Bendix Corporation, The. Method of making an igniter plug with nickel coating on center electrode. 4,374,450, Cl. 445-7.000.
Washburn, James C.: *See—*
Hemmer, Valentine J.; Piscitelli, R. Amelia; Fischer, Charles P.; and Washburn, James C., 4,374,604, Cl. 339-59.00R.
Waszeciak, Douglas P.: *See—*
Farrissey, William J.; McLaughlin, Alexander; and Waszeciak, Douglas P., 4,374,791, Cl. 264-39.000.
Waters, George W.; and Luntz, Michael B., to Harris Corporation. Link performance indicator with alternate data sampling and error indication generation. 4,375,099, Cl. 371-6.000.
Watkins, Bruce J., to Hughes Tool Company. Metal to metal sealed joint for tubing string. 4,374,595, Cl. 285-137.00A.
Watts, George T., to Goodyear Tire & Rubber Company, The. Wheel well filler. 4,374,535, Cl. 152-381.600.
Wean United, Inc.: *See—*
Miles, John H., 4,374,718, Cl. 204-202.000.
Weaver, Jimmie D.: *See—*
McLaughlin, Homer C.; and Weaver, Jimmie D., 4,374,739, Cl. 252-8.55R.
Weaver, Max A.; and Fleischer, Jean C., to Eastman Kodak Company. Substituted ether or thioether isothiazole azo dyes. 4,374,767, Cl. 260-158.000.
Weaver, Max A.: *See—*
Giles, Ralph R.; and Weaver, Max A., 4,374,769, Cl. 260-187.000.
Weber, Rolf-Ortwin; Soder, Alfons; and Boksay, Istvan, to Hoechst Aktiengesellschaft. Cyclic diamine derivatives. 4,374,990, Cl. 544-376.000.
Wehner, Gregor: *See—*
Eichler, Jurgen; Herz, Claus; Neisius, Karl-Heinz; and Wehner, Gregor, 4,374,984, Cl. 544-80.000.
Weinlich, Jurgen: *See—*
Fischer, Edgar; Brandrup, Johannes; and Weinlich, Jurgen, 4,374,966, Cl. 526-62.000.
Weir, Donald R.; Kerfoot, Derek G. E.; and Hofirek, Zdenek, to Sherritt Gordon Mines Limited. Removal of selenium from acidic copper/nickel solutions. 4,374,808, Cl. 423-42.000.
Weise, Andrew P.; and Wisner, George R., to Otis Elevator Company. Position sensor. 4,375,057, Cl. 340-21.000.
Weisrock, William P.; and Klein, Harriet S., to Standard Oil Company (Indiana). Production of xanthan gum from a chemically defined medium introduction. 4,374,929, Cl. 435-104.000.
Weiss, Sidney: *See—*
Fine, Ralph; and Weiss, Sidney, 4,374,822, Cl. 424-49.000.
Weissbach, Herbert: *See—*
Brot, Nathan; and Weissbach, Herbert, 4,374,928, Cl. 435-68.000.
Wellman, George R.: *See—*
Labaw, Clifford S.; and Wellman, George R., 4,374,996, Cl. 548-342.000.
Wennberg, Ake: *See—*
Magnusson, Harry; Tallback, Gote; and Wennberg, Ake, 4,375,076, Cl. 363-68.000.
Westerfield, Lawerence D., to International Harvester Co. Seed planter depth control. 4,374,500, Cl. 111-85.000.
Westerman, Granval W.; and Otwell, Corbett I., to Standard Oil Company (Indiana). Technique for control of injection wells. 4,374,544, Cl. 166-252.000.
Western Electric Company, Incorporated: *See—*
Cocco, Eugene R.; Pflugrad, William G.; and Small, Byron L., 4,375,012, Cl. 174-69.000.
Dorey II, John K.; and Huneke, James T., 4,374,869, Cl. 427-97.000.
Western Geophysical Company of America: *See—*
Thigpen, Ben B.; Crump, Eldon E.; and Shave, David G., 4,375,089, Cl. 367-20.000.
Westinghouse Electric Corp.: *See—*
Wojcik, Thaddeus A.; Kobuck, Richard M.; and Antol, Ronald F., 4,374,462, Cl. 51-411.000.
Weyland, Peter: *See—*
Decker, Walter; Schoen, Ernst; Grabhoefer, Herbert; and Weyland, Peter, 4,374,935, Cl. 521-173.000.
Whalen, Daniel A. Automatic flue gas heat recovery system. 4,374,506, Cl. 122-20.00B.
Whelchel, Robert C.: *See—*
Sanderson, Roger S.; and Whelchel, Robert C., 4,374,570, Cl. 236-92.00R.
White, James T.: *See—*
Sanfilippo, Salvatore G.; and White, James T., 4,374,899, Cl. 428-514.000.
White, Jonathan C.: *See—*
Bjorkholm, John E.; and White, Jonathan C., 4,375,033, Cl. 250-251.000.
White, Philip J.: *See—*
Cusano, Dominic A.; Swank, Robert K.; and White, Philip J., 4,374,749, Cl. 252-301.360.
Whitehurst, Darrell D.; Mitchell, Thomas O.; and Farcasiu, Malvina, to Electric Power Research Institute. Process for coal liquefaction. 4,374,725, Cl. 208-8.0LE.
Wiech, Raymond E., Jr. Method of fabricating complex micro-circuit boards and substrates. 4,374,457, Cl. 29-591.000.
Wiegner, Dieter: *See—*
Brandt, Horst; Hornle, Reinhold; Buchele, Richard; and Wiegner, Dieter, 4,374,642, Cl. 8-639.000.
Wielonski, Roy F.: *See—*
Drauglis, Edmund; Wielonski, Roy F.; and Sliemers, Francis A., 4,374,717, Cl. 204-192.00C.
Wiener, Dieter. Dressing apparatus for cup-type abrasive wheels as used for grinding spiral bevel gearwheels. 4,374,513, Cl. 125-11.0CD.
Wiersum, Ulfert E.: *See—*
Verhelst, Willem F.; and Wiersum, Ulfert E., 4,374,938, Cl. 523-124.000.
Wilcox, Jack W., to Abex Corporation. Vane control for a vane motor. 4,374,632, Cl. 418-267.000.
Williams, James B., to Data General Corporation. Power supply regulator circuit employing a transformer having a control winding. 4,375,077, Cl. 363-91.000.
Williams, Thomas C., to Union Carbide Corporation. Polysulfide alkoxy silane coupling agents. 4,374,943, Cl. 523-211.000.
Williams, Tom R.: *See—*
Bright, Edward J.; Cherry, Hitesh; Dehoff, Robert E.; Fedder, James L.; and Williams, Tom R., 4,374,607, Cl. 339-253.00R.
Wilson, George L., to Kachur, Michal. Cleaning device for use with a dip stick. 4,374,445, Cl. 15-210.00B.
Wilson, Kenneth E.: *See—*
Hazen, George G.; Volante, Ralph P.; and Wilson, Kenneth E., 4,374,772, Cl. 260-245.20T.
Winslow, Louis E., to Minnesota Mining and Manufacturing Company. Pressure-sensitive adhesive tape. 4,374,883, Cl. 428-40.000.
Wintershall Aktiengesellschaft: *See—*
Lindorfer, Walter; Schulz, Walther; Wagner, Fritz; and Jahn-Held, Wilhelm, 4,374,735, Cl. 210-772.000.
Wisner, George R.: *See—*
Weise, Andrew P.; and Wisner, George R., 4,375,057, Cl. 340-21.000.
Witco Chemical Corporation: *See—*
Liauw, Koei-Liang; and Fisch, Michael H., 4,374,945, Cl. 524-114.000.
Wojcik, Thaddeus A.; Kobuck, Richard M.; and Antol, Ronald F., to Westinghouse Electric Corp. Decontamination apparatus. 4,374,462, Cl. 51-411.000.
Wolf, Klaus-Ulrich: *See—*
Heinemann, Henning; Ohlendorf, Heinrich-Wilhelm; and Wolf, Klaus-Ulrich, 4,374,846, Cl. 424-274.000.
Wood, Paul A. P., to Pifco Limited. Electric kettle. 4,375,028, Cl. 219-441.000.
Wood, Prentice J.: *See—*
Stout, James T.; and Wood, Prentice J., 4,374,561, Cl. 206-188.000.
Workman, Lester J. Method for controlling ectoparasites. 4,374,853, Cl. 424-303.000.
Worthington, Ralph E.; Smith, Michael A.; and Tobias, John M., to Uranium Recovery Corporation. Reductants for reducing metals in acid media. 4,374,805, Cl. 423-10.000.
Wuertele, Lothar: *See—*
Eckert, Guenter; Wuertele, Lothar; Petersen, Harro; Goeckel, Ulrich; and Fischer, Kurt, 4,374,872, Cl. 427-338.000.
Wuthrich, Hans-Rudolf; Speigel, Hubert; Lehner, Hermann; and Krebs, Peter, to Sprecher & Schuh AG. Gas-blast switch. 4,375,023, Cl. 200-148.00R.
Wyatt, Charles E., to Miletech, Inc. Metering device for fuel control system. 4,374,785, Cl. 261-51.000.
Wyoming Mineral Corporation: *See—*
Abodishish, Hani A.; and Ritchey, Robert W., 4,374,806, Cl. 423-10.000.
Wyrsch, Dieter: *See—*
Mollet, Herbert; and Wyrsch, Dieter, 4,374,914, Cl. 430-15.000.

Wyvratt, Matthew J.: *See—*
Harris, Elbert E.; Patchett, Arthur A.; Tristram, Edward W.; and Wyvratt, Matthew J., 4,374,829, Cl. 424-177.000.
Xerox Corporation: *See—*
Fisli, Tibor, 4,374,617, Cl. 355-8.000.
Pollack, Joel M., 4,374,707, Cl. 204-11.000.
Spinelli, Richard A.; and Bock, Edward C., 4,374,619, Cl. 355-57.000.
Yamada, Ryozo: *See—*
Ikeda, Eiji; Adachi, Tomohiro; Ito, Yoshihiro; Yamada, Ryozo; Taga, Akio; and Takashima, Shigeo, 4,374,695, Cl. 156-293.000.
Yamaguchi, Akira, to Nippon Chemical Industrial Co., Ltd. Chromium oxide-based sintered bodies and process for production thereof. 4,374,897, Cl. 428-446.000.
Yamaha Hatsudoki Kabushiki Kaisha: *See—*
Kobayashi, Takashi, 4,374,591, Cl. 280-21.00R.
Yamamoto, Kaname, to Tajima Roofing Co., Ltd. Process for making a built-up thermal insulating and bituminous waterproofing assembly. 4,374,687, Cl. 156-71.000.
Yamane, Tsuneo: *See—*
Komurasaki, Satoshi; Ueda, Atsushi; and Yamane, Tsuneo, 4,374,510, Cl. 123-418.000.
Yamanouchi Pharmaceutical Co., Ltd.: *See—*
Sindo, Tiuzi; Obara, Tadashi; and Adachi, Hidenari, 4,374,827, Cl. 424-92.000.
Yamasaki, Takanori: *See—*
Senda, Jihei; Inoue, Yoshihiro; Uenishi, Toshiaki; Harada, Hidefumi; Nakata, Kouji; Akagi, Akio; and Yamasaki, Takanori, 4,374,676, Cl. 106-303.000.
Yamauchi, Keiji: *See—*
Yasuda, Tokuro; and Yamauchi, Keiji, 4,374,895, Cl. 428-328.000.
Yamauchi, Takahiko, to Fujitsu Limited. Sense amplifier circuit. 4,375,039, Cl. 307-530.000.
Yano, Kozo: *See—*
Kuwagaki, Hiroshi; Yano, Kozo; and Takechi, Sadatoshi, 4,374,610, Cl. 350-357.000.
Yasuda, Tokuro; and Yamauchi, Keiji, to Oji Paper Co., Ltd. Electrostatic recording element. 4,374,895, Cl. 428-328.000.
Yavrouian, Andre H.: *See—*
Gupta, Amitava; Ingham, John D.; and Yavrouian, Andre H., 4,374,955, Cl. 525-281.000.
Yazu, Shuji: *See—*
Hara, Akio; and Yazu, Shuji, 4,374,900, Cl. 428-551.000.
Yellin, Bernard. Support and joiner means for shelving. 4,374,498, Cl. 108-114.000.
Yellin, Tobias O.; and Jones, Derrick F., to Imperial Chemical Industries Ltd.; and ICI Americas Inc. Antisecretory heterocyclic derivatives, process for their manufacture and pharmaceutical compositions containing them. 4,374,836, Cl. 424-251.000.
Yim, Marvin G. Starting transformer for gas lamps with open secondary. 4,375,045, Cl. 315-209.00R.
Yokoyama, Shigeki; Kishimoto, Shinzo; Toriya, Itsuki; and Nakamura, Taku, to Fuji Photo Film Co., Ltd. Antistatic silver halide photographic light-sensitive material. 4,374,924, Cl. 430-528.000.
Yoon, In B. Occlusion ring applicator. 4,374,523, Cl. 128-326.000.
Yoshida, Ikushi: *See—*
Abe, Mitsunobu; Yoshida, Ikushi; Matsuo, Munetsugu; and Hayakawa, Hiroshi, 4,374,682, Cl. 148-12.00C.
Yoshida Industry Co., Ltd.: *See—*
Ogasawara, Hirotake; Hatakeyama, Yoshiharu; and Ishiguro, Mitsuo, 4,374,796, Cl. 264-101.000.
Yoshida, Kenji, to Solic Co., Ltd. Device for adjusting position of drive element for opening and closing automatically horizontally opening and closing sliding door. 4,375,019, Cl. 200-52.00R.
Yoshida, Makoto: *See—*
Hayashi, Takao; Kato, Hajime; Miyamoto, Akio; and Yoshida, Makoto, 4,374,671, Cl. 106-21.000.
Yoshida, Ryo: *See—*
Konishi, Hiroyuki; Hino, Naganori; Matsumoto, Hiroshi; and Yoshida, Ryo, 4,374,662, Cl. 71-103.000.
Yoshio, Junichi, to Pioneer Electronic Corporation. Automatic music selecting device. 4,375,092, Cl. 369-41.000.
Yotsumoto, Toshihiro; and Koyama, Kazuo, to Bridgestone Tire Company Limited. Adhesive for polyester fibrous material. 4,374,962, Cl. 525-442.000.
Young, William P. Apparatus for pyrolysis of hydrocarbon bearing materials. 4,374,704, Cl. 202-117.000.
Yuill, Kenneth A.: *See—*
Davitt, Alan L.; and Yuill, Kenneth A., 4,374,686, Cl. 149-21.000.
Zacho, Per G.; and Ahrendsen, Kjeld, to Danfoss A/S. Control apparatus for thermal equipment particularly a heat engine. 4,375,029, Cl. 219-493.000.
Zahedi, Karim; and Alexander, Jeffrey C., to EFB Inc. Filter apparatus and method for collecting fly ash and fine dust. 4,374,652, Cl. 55-6.000.
Zaidan Hojin Biseibutsu Kagaku Kenkyu Kai: *See—*
Umezawa, Hamao; Takeuchi, Tomio; Tatsuta, Kuniaki; and Takahashi, Yoshikazu, 4,374,980, Cl. 536-6.400.
Zarr, William A.: *See—*
Goldberg, Ernest; Trembly, Gray C.; and Zarr, William A., 4,374,492, Cl. 102-220.000.
Zega, Bogdan, to Battelle Development Corporation. Cathodic sputtering target including means for detecting target piercing. 4,374,722, Cl. 204-298.000.
Zenith Radio Corporation: *See—*
Lange, Howard G., 4,374,609, Cl. 350-128.000.
Lehnert, Stanley E., 4,375,046, Cl. 315-368.000.
Zeto, Robert J.; and Zimmerman, Franz X., to United States of America, Army. Dual chambered high pressure furnace. 4,375,027, Cl. 219-390.000.
Zhadanov, Sam. Water driven brush for cars and the like. 4,374,444, Cl. 15-29.000.
Zhitkov, Vladimir V.: *See—*
Azbukin, Vladimir G.; Balandin, Jury F.; Gorynin, Igor V.; Gluskin, Lev Y.; Zvezdin, Jury I.; Ignatenko, Alexandr G.; Krasnov, Alexandr N.; Melekhov, Rostislav K.; Osipova, Inna S.; Pavlov, Valery N.; Khokhlov, Alexandr A.; Stepanov, Ivan A.; Anfimov, Alexandr F.; Ardentov, Vasily V.; Burmakin, Viktor M.; Ignatov, Viktor A.; Rokhlin, Eduard A.; and Zhitkov, Vladimir V., 4,374,680, Cl. 148-2.000.
Zimmer, Franklin V.: *See—*
Funston, Joseph; Krell, William C.; and Zimmer, Franklin V., 4,374,672, Cl. 106-97.000.
Zimmerman, Franz X.: *See—*
Zeto, Robert J.; and Zimmerman, Franz X., 4,375,027, Cl. 219-390.000.
Zvezdin, Jury I.: *See—*
Azbukin, Vladimir G.; Balandin, Jury F.; Gorynin, Igor V.; Gluskin, Lev Y.; Zvezdin, Jury I.; Ignatenko, Alexandr G.; Krasnov, Alexandr N.; Melekhov, Rostislav K.; Osipova, Inna S.; Pavlov, Valery N.; Khokhlov, Alexandr A.; Stepanov, Ivan A.; Anfimov, Alexandr F.; Ardentov, Vasily V.; Burmakin, Viktor M.; Ignatov, Viktor A.; Rokhlin, Eduard A.; and Zhitkov, Vladimir V., 4,374,680, Cl. 148-2.000.
Zwick Energy Research Organization, Inc.: *See—*
Zwick, Eugene B.; Nguyen, Dung D.; Brigham, William D.; and Hoffman, Kenneth, 4,374,637, Cl. 431-183.000.
Zwick, Eugene B.; Nguyen, Dung D.; Brigham, William D.; and Hoffman, Kenneth, to Zwick Energy Research Organization, Inc. Burner construction. 4,374,637, Cl. 431-183.000.

LIST OF REISSUE PATENTEES

TO WHOM

PATENTS WERE ISSUED ON THE 22ND DAY OF FEBRUARY, 1983

NOTE.—Arranged in accordance with the first significant character or word of the name (in accordance with city and telephone directory practice).

Carter, Michael C.; and Steer, Philip J., to National Research Development Corporation. Apparatus for indicating uterine activity in labor. Re. 31,158, Cl. 364-415.000.
Caterpillar Tractor Co.: *See—*
Hammond, James T.; and Parks, John H., Re. 31,154, Cl. 74-411.000.
Crocker, Samuel S., to Schlumberger Technology Corporation. Pump down system for placing and retrieving subsurface well equipment. Re. 31,155, Cl. 166-117.500.
Dessert, Richard. Energy efficient passenger vehicle. Re. 31,156, Cl. 180-2.00A.
Hammond, James T.; and Parks, John H., to Caterpillar Tractor Co. Flexible drive. Re. 31,154, Cl. 74-411.000.
Kinjo, Hisao, to Victor Company of Japan, Ltd. Tracking control apparatus for use in apparatus for reproducing video signals from a rotary recording medium. Re. 31,160, Cl. 369-124.000.
Maxon Industries, Inc.: *See—*
Perkins, William V., Re. 31,157, Cl. 414-545.000.
National Research Development Corporation: *See—*
Carter, Michael C.; and Steer, Philip J., Re. 31,158, Cl. 364-415.000.
Parks, John H.: *See—*
Hammond, James T.; and Parks, John H., Re. 31,154, Cl. 74-411.000.
Perkins, William V., to Maxon Industries, Inc. Self-folding platform. Re. 31,157, Cl. 414-545.000.
Schlumberger Technology Corporation: *See—*
Crocker, Samuel S., Re. 31,155, Cl. 166-117.500.
Sicre, Jean-Luc, to Societe Francaise d'Equipement pour la Navigation Aerienne. Flying method and system using total energy for an aircraft. Re. 31,159, Cl. 364-427.000.
Societe Francaise d'Equipement pour la Navigation Aerienne: *See—*
Sicre, Jean-Luc, Re. 31,159, Cl. 364-427.000.
Steer, Philip J.: *See—*
Carter, Michael C.; and Steer, Philip J., Re. 31,158, Cl. 364-415.000.
Victor Company of Japan, Ltd.: *See—*
Kinjo, Hisao, Re. 31,160, Cl. 369-124.000.

LIST OF DESIGN PATENTEES

AB Bahco Verktyg: *See—*
Brunosson, Bengt; and Erlandsson, Lars, 268,002, Cl. D8-58.000.
AB Jarnarmatur: *See—*
Pettersson, Dan A. B., 267,997, Cl. D32-66.000.
Albertson, Robert V. Forced air waste oil incinerator. 268,050, 2-22-83, Cl. D23-92.000.
Appel, Mel; and Kress, George, to Appel, Mel. Toy xylophone. 268,038, 2-22-83, Cl. D21-64.000.
Appel, Mel; and Kress, George, to Appel, Mel. Toy chain saw. 268,042, 2-22-83, Cl. D21-120.000.
Asahi Yukizai Kogyo Kabushiki Kaisha: *See—*
Ueda, Tomoyuki, 268,048, Cl. D23-19.000.
Ueda, Tomoyuki, 268,049, Cl. D23-19.000.
Associated Products, Inc.: *See—*
Levine, Noel, 268,005, Cl. D8-367.000.
Ault, Charles M., to Termiflex Corporation. Front panel for a keyboard and display unit. 268,030, 2-22-83, Cl. D14-115.000.
Balz, Barry E. Stripping tool for use on concrete forms or the like. 268,001, 2-22-83, Cl. D8-14.000.
Barr, Josef J. Finger ring or similar article. 268,015, 2-22-83, Cl. D11-39.000.
Barrera, Gilbert E. Tooth paste dispenser. 267,993, 2-22-83, Cl. D6-87.000.
Batto, Paul C.: *See—*
Bryk, Charles S.; and Batto, Paul C., 268,011, Cl. D10-15.000.
Bell, Donald L., to Human Performance Systems, Inc. Rotational exerciser. 268,046, 2-22-83, Cl. D21-198.000.
Bevilaqua, Ernest M.; McCroskery, Allan L.; and Knerr, Theodore N., to Otis Elevator Company. Control panel for elevator systems. 268,025, 2-22-83, Cl. D13-35.000.
Bevilaqua, Ernest M.; McCroskery, Allan L.; and Knerr, Theodore N., to Otis Elevator Company. Control panel for elevator systems. 268,026, 2-22-83, Cl. D13-35.000.
Bisacca, Mildred J.: *See—*
Witt, Frank H., Jr., 268,008, Cl. D9-307.000.
Blackburn, Bruce N., to Champion International Corporation. Print font. 268,035, 2-22-83, Cl. D18-24.000.
Block, Alvin, to Intimate Jewels, Inc. Earring. 268,016, 2-22-83, Cl. D11-75.000.
Blue Box Toy Factory, Limited: *See—*
Ng, Cheuk S., 268,040, Cl. D21-109.000.
Boyd, Jeffrey A., to General Electric Company. Battery charger. 268,023, 2-22-83, Cl. D13-5.000.
Bridgeport Metal Goods Manufacturing Company, The: *See—*
Moore, Arthur H., 268,055, Cl. D26-112.000.
Brunosson, Bengt; and Erlandsson, Lars, to AB Bahco Verktyg. Wire nippers. 268,002, 2-22-83, Cl. D8-58.000.
Bryk, Charles S.; and Batto, Paul C., to Texasgulf Inc. Desk chronometer. 268,011, 2-22-83, Cl. D10-15.000.
Buhk, Randall P.; Hozeski, Kenneth W.; and Karrip, Alex, to Steelcase Inc. Chair. 267,989, 2-22-83, Cl. D6-30.000.
Buhk, Randall P.; Hozeski, Kenneth W.; and Karrip, Alex, to Steelcase Inc. Chair. 267,990, 2-22-83, Cl. D6-31.000.
Bullard, Harvey E. Animated display. 267,995, 2-22-83, Cl. D6-172.000.
Cagan, Bernard J.; and McQuary, Kenneth L., to Placo Products Company. Dart. 268,036, 2-22-83, Cl. D21-49.000.
Campbell-Kelly, Adrian R.; Fjelstad, Hanne; Gravas, Lasse; Reinemo, Erik; and Sekkenes, Johan. Feed supplement dispenser for piglets. 268,056, 2-22-83, Cl. D30-15.000.
Champion International Corporation: *See—*
Blackburn, Bruce N., 268,035, Cl. D18-24.000.
Chance, Gary S., to Docutel Corporation. Banking machine terminal. 268,062, 2-22-83, Cl. D99-28.000.
Charette, Eugene G. Solarium with connecting dressing room and tanning room. 268,054, 2-22-83, Cl. D24-39.000.
Chase, David O., to John D. Brush & Company, Inc. Fire resistant container. 268,063, 2-22-83, Cl. D99-28.000.
Cincinnati Milacron Inc.: *See—*
Stackhouse, Theodore H., 268,033, Cl. D15-199.000.
Crespi, Gabriella. Openable table. 267,988, 2-22-83, Cl. D6-27.000.
Dellinger, Henry P. Rotary cultivating tool. 268,000, 2-22-83, Cl. D8-08.000.
DeLoye, Raymond H.: *See—*
Matz, Richard C.; Kaminski, Donald F.; and DeLoye, Raymond H., 268,032, Cl. D15-85.000.
Docutel Corporation: *See—*
Chance, Gary S., 268,062, Cl. D99-28.000.
Dunlop Limited: *See—*
Major, Douglas J.; and Marriott, Peter R., 268,018, Cl. D12-146.000.
Major, Douglas J.; Marriott, Peter R.; and Hart, Claude A., 268,019, Cl. D12-151.000.
Duvoux, Pierre G., to Equipements Automobiles Marchal. Windshield wiper. 268,020, 2-22-83, Cl. D12-155.000.
Eadie, Richard P., to Vanderburgh Enterprises. Shower head. 268,052, 2-22-83, Cl. D23-35.000.
Ekuan, Kenji, to Nippon Gakki Seizo Kabushiki Kaisha. Record player. 268,028, 2-22-83, Cl. D14-14.000.
EL CU S.p.A.: *See—*
Zappa, Carlo, 268,031, Cl. D15-69.000.
ELPO Industries, Inc.: *See—*
Kowalski, Eugene, 267,996, Cl. D7-101.000.
Equipements Automobiles Marchal: *See—*
Duvoux, Pierre G., 268,020, Cl. D12-155.000.
Erlandsson, Lars: *See—*
Brunosson, Bengt; and Erlandsson, Lars, 268,002, Cl. D8-58.000.
Fielder, Jean C.: *See—*
Litt, Kenneth C.; and Fielder, Jean C., 268,024, Cl. D13-11.000.
Fisher, Charles R. Data collection terminal for authorization control system or the like. 268,029, 2-22-83, Cl. D14-107.000.
Fjelstad, Hanne: *See—*

Campbell-Kelly, Adrian R.; Fjelstad, Hanne; Gravas, Lasse; Reinemo, Erik; and Sekkenes, Johan, 268,056, Cl. D30-15.000.
Flower, Milton O., to Max Factor & Co. Brush for applying makeup. 267,986, 2-22-83, Cl. D4-25.000.
Foster Grant Corporation: *See—*
Shelton, Robert N., 267,992, Cl. D6-85.000.
Fulster, Chris. Duck decoy with stabilizing sponsons and keel. 268,047, 2-22-83, Cl. D22-21.000.
General Electric Company: *See—*
Boyd, Jeffrey A., 268,023, Cl. D13-5.000.
Lenz, Henry G.; and Stewart, Earl K., 268,022, Cl. D13-3.000.
General Ribbon Corporation: *See—*
Van Voy, Marv, 268,034, Cl. D18-12.000.
Gravas, Lasse: *See—*
Campbell-Kelly, Adrian R.; Fjelstad, Hanne; Gravas, Lasse; Reinemo, Erik; and Sekkenes, Johan, 268,056, Cl. D30-15.000.
GRRN Co.: *See—*
Witt, Frank H., Jr., 268,008, Cl. D9-307.000.
Harmon, Nora R., to Health-Mor Inc. Hand suction cleaner. 268,057, 2-22-83, Cl. D32-18.000.
Hart, Claude A.: *See—*
Major, Douglas J.; Marriott, Peter R.; and Hart, Claude A., 268,019, Cl. D12-151.000.
Health-Mor Inc.: *See—*
Harmon, Nora R., 268,057, Cl. D32-18.000.
Hirsh, Aaron. Container for perfume. 268,009, 2-22-83, Cl. D9-354.000.
Hozeski, Kenneth W.: *See—*
Buhk, Randall P.; Hozeski, Kenneth W.; and Karrip, Alex, 267,989, Cl. D6-30.000.
Buhk, Randall P.; Hozeski, Kenneth W.; and Karrip, Alex, 267,990, Cl. D6-31.000.
Hudson, Gary: *See—*
Sears, William J.; and Hudson, Gary, 268,014, Cl. D11-30.000.
Human Performance Systems, Inc.: *See—*
Bell, Donald L., 268,046, Cl. D21-198.000.
Intimate Jewels, Inc.: *See—*
Block, Alvin, 268,016, Cl. D11-75.000.
Iwahashi, Wataru: *See—*
Takashima, Hiroshi; Usami, Seiji; Iwahashi, Wataru; and Ohi, Hiroshi, 268,027, Cl. D14-2.000.
John D. Brush & Company, Inc.: *See—*
Chase, David O., 268,063, Cl. D99-28.000.
Kaminski, Donald F.: *See—*
Matz, Richard C.; Kaminski, Donald F.; and DeLoye, Raymond H., 268,032, Cl. D15-85.000.
Karrip, Alex: *See—*
Buhk, Randall P.; Hozeski, Kenneth W.; and Karrip, Alex, 267,989, Cl. D6-30.000.
Buhk, Randall P.; Hozeski, Kenneth W.; and Karrip, Alex, 267,990, Cl. D6-31.000.
Kinnebrew, Joseph E., IV. Litter container. 268,058, 2-22-83, Cl. D34-01.000.
Knerr, Theodore N.: *See—*
Bevilaqua, Ernest M.; McCroskery, Allan L.; and Knerr, Theodore N., 268,025, Cl. D13-35.000.
Bevilaqua, Ernest M.; McCroskery, Allan L.; and Knerr, Theodore N., 268,026, Cl. D13-35.000.
Kowalski, Eugene, to ELPO Industries, Inc. Food mincer. 267,996, 2-22-83, Cl. D7-101.000.
Kozlowski, Joseph A. Heat distributor. 268,053, 2-22-83, Cl. D23-151.000.
Kracke, Donald R. Trash container. 268,059, 2-22-83, Cl. D34-4.000.
Kress, George: *See—*
Appel, Mel; and Kress, George, 268,038, Cl. D21-64.000.
Appel, Mel; and Kress, George, 268,042, Cl. D21-120.000.
Landan, Edward C.: *See—*
Leffler, Dennis F.; Truette, Danny M.; and Landan, Edward C., 267,987, Cl. D6-22.000.
Leffler, Dennis F.; Truette, Danny M.; and Landan, Edward C., to Pelton & Crane Company, The. Treatment chair. 267,987, 2-22-83, Cl. D6-22.000.
Lemmeyer, Gary R., to Quaker Oats Company, The. Toy printing member. 268,044, 2-22-83, Cl. D21-127.000.
Lemmeyer, Gary R., to Quaker Oats Company, The. Toy print holder. 268,045, 2-22-83, Cl. D21-127.000.
Lenz, Henry G.; and Stewart, Earl K., to General Electric Company. Dynamoelectric machine end cap. 268,022, 2-22-83, Cl. D13-3.000.
Levine, Noel, to Associated Products, Inc. Shank portion of a shower curtain hook or the like. 268,005, 2-22-83, Cl. D8-367.000.
Levine, Rosalie S.: *See—*
Witt, Frank H., Jr., 268,008, Cl. D9-307.000.
Litt, Kenneth C.; and Fielder, Jean C., to Pace Incorporated. Power supply unit. 268,024, 2-22-83, Cl. D13-11.000.
Luzich, Norman E., to Pizza Hut, Inc. Food product assembly table. 267,994, 2-22-83, Cl. D6-160.000.
Major, Douglas J.; and Marriott, Peter R., to Dunlop Limited. Tire for a vehicle wheel. 268,018, 2-22-83, Cl. D12-146.000.
Major, Douglas J.; Marriott, Peter R.; and Hart, Claude A., to Dunlop Limited. Tire for a vehicle wheel. 268,019, 2-22-83, Cl. D12-151.000.
Marriott, Peter R.: *See—*
Major, Douglas J.; and Marriott, Peter R., 268,018, Cl. D12-146.000.
Major, Douglas J.; Marriott, Peter R.; and Hart, Claude A., 268,019, Cl. D12-151.000.
Matz, Richard C.; Kaminski, Donald F.; and DeLoye, Raymond H., to Stolle Corporation, The. Refrigerator with eye level controls. 268,032, 2-22-83, Cl. D15-85.000.
Max Factor & Co.: *See—*
Flower, Milton O., 267,986, Cl. D4-25.000.
McCroskery, Allan L.: *See—*
Bevilaqua, Ernest M.; McCroskery, Allan L.; and Knerr, Theodore N., 268,025, Cl. D13-35.000.
Bevilaqua, Ernest M.; McCroskery, Allan L.; and Knerr, Theodore N., 268,026, Cl. D13-35.000.
McQuary, Kenneth L.: *See—*
Cagan, Bernard J.; and McQuary, Kenneth L., 268,036, Cl. D21-49.000.
Mihara, Akira, to Nohmi Bosai Kogyo Co., Ltd. Burglar alarm. 268,012, 2-22-83, Cl. D10-106.000.
Moore, Arthur H., to Bridgeport Metal Goods Manufacturing Company, The. Portable lamp. 268,055, 2-22-83, Cl. D26-112.000.
Munch, Emil L.; and Von Benken, John D., to Nestier Corporation. Tote tray. 268,061, 2-22-83, Cl. D34-40.000.
Nestier Corporation: *See—*
Munch, Emil L.; and Von Benken, John D., 268,061, Cl. D34-40.000.
Ng, Cheuk S., to Blue Box Toy Factory, Limited. Toy vanity case. 268,040, 2-22-83, Cl. D21-109.000.
Ng, Cheuk S., to Tai Sang Industrial Co., Ltd. Toy house. 268,041, 2-22-83, Cl. D21-114.000.
Nippon Gakki Seizo Kabushiki Kaisha: *See—*
Ekuan, Kenji, 268,028, Cl. D14-14.000.
Nohmi Bosai Kogyo Co., Ltd.: *See—*
Mihara, Akira, 268,012, Cl. D10-106.000.
O'Brien, John D., to Wm. E. Wright Co. Display card. 268,010, 2-22-83, Cl. D9-457.000.
Ohi, Hiroshi: *See—*
Takashima, Hiroshi; Usami, Seiji; Iwahashi, Wataru; and Ohi, Hiroshi, 268,027, Cl. D14-2.000.
Ohno, Richard J. Exit operator. 268,003, 2-22-83, Cl. D8-302.000.
Olko, Henry. Chair. 267,991, 2-22-83, Cl. D6-57.000.
Orenstein, Henry. Toy extruder. 268,043, 2-22-83, Cl. D21-124.000.
Osborne, Richard C. Aerial toy. 268,039, 2-22-83, Cl. D21-86.000.
Otis Elevator Company: *See—*
Bevilaqua, Ernest M.; McCroskery, Allan L.; and Knerr, Theodore N., 268,025, Cl. D13-35.000.
Bevilaqua, Ernest M.; McCroskery, Allan L.; and Knerr, Theodore N., 268,026, Cl. D13-35.000.
Oy Partek Ab: *See—*
Sutela, Leo, 268,060, Cl. D34-35.000.
Pace Incorporated: *See—*
Litt, Kenneth C.; and Fielder, Jean C., 268,024, Cl. D13-11.000.
Pelton & Crane Company, The: *See—*
Leffler, Dennis F.; Truette, Danny M.; and Landan, Edward C., 267,987, Cl. D6-22.000.
Pettersson, Dan A. B., to AB Jarnarmatur. Frame for ironing board. 267,997, 2-22-83, Cl. D32-66.000.
Phillips Plastics Corporation: *See—*
Wollar, Burnell J., 268,006, Cl. D8-393.000.
Pizza Hut, Inc.: *See—*
Luzich, Norman E., 267,994, Cl. D6-160.000.
Placo Products Company: *See—*
Cagan, Bernard J.; and McQuary, Kenneth L., 268,036, Cl. D21-49.000.
Porcelli, Anthony J.: *See—*
Wiseltier, David; and Porcelli, Anthony J., 268,037, Cl. D21-59.000.
Presto Lock, Inc.: *See—*
Stolarz, Edward M., 268,004, Cl. D8-331.000.
Quaker Oats Company, The: *See—*
Lemmeyer, Gary R., 268,044, Cl. D21-127.000.
Lemmeyer, Gary R., 268,045, Cl. D21-127.000.
Raskin, Martin G.: *See—*
Wiseltier, David; and Porcelli, Anthony J., 268,037, Cl. D21-59.000.
Reinemo, Erik: *See—*
Campbell-Kelly, Adrian R.; Fjelstad, Hanne; Gravas, Lasse; Reinemo, Erik; and Sekkenes, Johan, 268,056, Cl. D30-15.000.
Rhoades, Benjamin A. Fireplace woodbin. 267,998, 2-22-83, Cl. D23-138.500.
Rhoades, Benjamin A. Fireplace poker. 267,999, 2-22-83, Cl. D8-14.000.
Rudkin, Henry A., Jr.: *See—*
Wiley, Nathaniel C., Jr.; and Rudkin, Henry A., Jr., 268,021, Cl. D12-181.000.
Rudkin-Wiley Corporation: *See—*
Wiley, Nathaniel C., Jr.; and Rudkin, Henry A., Jr., 268,021, Cl. D12-181.000.
Sears, William J.; and Hudson, Gary. Helmet ring. 268,014, 2-22-83, Cl. D11-30.000.
Sekkenes, Johan: *See—*
Campbell-Kelly, Adrian R.; Fjelstad, Hanne; Gravas, Lasse, Reinemo, Erik; and Sekkenes, Johan, 268,056, Cl. D30-15.000.
Sharp Corporation: *See—*
Takashima, Hiroshi; Usami, Seiji; Iwahashi, Wataru; and Ohi, Hiroshi, 268,027, Cl. D14-2.000.
Shelton, Robert N., to Foster Grant Corporation. Display fixture. 267,992, 2-22-83, Cl. D6-85.000.

Sorensen, Winston J. F. Stove. 268,051, 2-22-83, Cl. D23-97.000.
Stackhouse, Theodore H., to Cincinnati Milacron Inc. Robot arm. 268,033, 2-22-83, Cl. D15-199.000.
Steelcase Inc.: *See—*
  Buhk, Randall P.; Hozeski, Kenneth W.; and Karrip, Alex, 267,989, Cl. D6-30.000.
  Buhk, Randall P.; Hozeski, Kenneth W.; and Karrip, Alex, 267,990, Cl. D6-31.000.
Stewart, Earl K.: *See—*
  Lenz, Henry G.; and Stewart, Earl K., 268,022, Cl. D13-3.000.
Stimmler, Alan J. Ring. 268,013, 2-22-83, Cl. D11-27.000.
Stolarz, Edward M., to Presto Lock, Inc. Control panel for combination lock and the like. 268,004, 2-22-83, Cl. D8-331.000.
Stolle Corporation, The: *See—*
  Matz, Richard C.; Kaminski, Donald F.; and DeLoye, Raymond H., 268,032, Cl. D15-85.000.
Sutela, Leo, to Oy Partek Ab. Hoisting bracket for an exchange platform frame or the like. 268,060, 2-22-83, Cl. D34-35.000.
Tai Sang Industrial Co., Ltd.: *See—*
  Ng, Cheuk S., 268,041, Cl. D21-114.000.
Takashima, Hiroshi; Usami, Seiji; Iwahashi, Wataru; and Ohi, Hiroshi, to Sharp Corporation. Video tape recorder. 268,027, 2-22-83, Cl. D14-2.000.
Temco Products, Inc.: *See—*
  Thomas, Morton I., 268,017, Cl. D12-130.000.
Termiflex Corporation: *See—*
  Ault, Charles M., 268,030, Cl. D14-115.000.
Texasgulf Inc.: *See—*
  Bryk, Charles S.; and Batto, Paul C., 268,011, Cl. D10-15.000.
Thomas, Morton I., to Temco Products, Inc. Walker. 268,017, 2-22-83, Cl. D12-130.000.
Truette, Danny M.: *See—*
  Leffler, Dennis F.; Truette, Danny M.; and Landan, Edward C., 267,987, Cl. D6-22.000.
Ueda, Tomoyuki, to Asahi Yukizai Kogyo Kabushiki Kaisha. Diaphragm valve. 268,048, 2-22-83, Cl. D23-19.000.
Ueda, Tomoyuki, to Asahi Yukizai Kogyo Kabushiki Kaisha. Diaphragm valve. 268,049, 2-22-83, Cl. D23-19.000.
Usami, Seiji: *See—*
  Takashima, Hiroshi; Usami, Seiji; Iwahashi, Wataru; and Ohi, Hiroshi, 268,027, Cl. D14-2.000.
Vanderburgh Enterprises: *See—*
  Eadie, Richard P., 268,052, Cl. D23-35.000.
Van Voy, Marv, to General Ribbon Corporation. Ribbon cartridge. 268,034, 2-22-83, Cl. D18-12.000.
Von Benken, John D.: *See—*
  Munch, Emil L.; and Von Benken, John D., 268,061, Cl. D34-40.000.
Wiley, Nathaniel C., Jr.; and Rudkin, Henry A., Jr., to Rudkin-Wiley Corporation. Nose fairing for a truck body or the like. 268,021, 2-22-83, Cl. D12-181.000.
Wm. E. Wright Co.: *See—*
  O'Brien, John D., 268,010, Cl. D9-457.000.
Wiseltier, David; and Porcelli, Anthony J., to Raskin, Martin G., a part interest. Toy mold or the like. 268,037, 2-22-83, Cl. D21-59.000.
Witt, Frank H., Jr., to Levine, Rosalie S.; Bisacca, Mildred J.; and GRRN Co. Flask or similar article. 268,008, 2-22-83, Cl. D9-307.000.
Wollar, Burnell J., to Phillips Plastics Corporation. Drive fastener. 268,006, 2-22-83, Cl. D8-393.000.
Zappa, Carlo, to EL CU S.p.A. Portable electric sewing machine. 268,031, 2-22-83, Cl. D15-69.000.
Zinnecker, Walter H. Chock for containers, ice chests, storage boxes or the like. 268,007, 2-22-83, Cl. D8-403.000.

LIST OF PLANT PATENTEES

Boos, Albert A. Nectarine tree. 4,984, 2-22-83, Cl. 41.000.
Hesse, Claron O., to University of California, The Regents of the. Peach tree. 4,985, 2-22-83, Cl. 42.000.
University of California, The Regents of the: *See—*
  Hesse, Claron O., 4,985, Cl. 42.000.

CLASSIFICATION OF PATENTS

ISSUED FEBRUARY 22, 1983

NOTE.—First number, class; second number, subclass; third number, patent number

CLASS 2
161 A 4,374,439
CLASS 6
10 4,374,440
CLASS 8
137 4,374,639
526 4,374,640
557 4,374,641
639 4,374,642
648 4,374,643
CLASS 14
16.5 4,374,442
CLASS 15
3 4,374,443
29 4,374,444
210 B 4,374,445
415 A 4,374,446
CLASS 17
1 R 4,374,447
CLASS 19
106 R 4,374,448
CLASS 23
293 A 4,374,645
CLASS 24
230 AL 4,374,449
CLASS 29
426.5 4,374,453
571 4,374,454
4,374,455
588 4,374,456
591 4,374,457
857 4,374,458
CLASS 33
174 C 4,374,459
CLASS 36
30 R 4,374,460
CLASS 40
2 R 4,374,461
CLASS 44
7 D 4,374,646
56 4,374,647
4,374,648
CLASS 48
192 4,374,649
202 4,374,650
CLASS 51
309 4,374,651
411 4,374,462
CLASS 53
54 4,374,463
324 4,374,464
CLASS 55
6 4,374,652
18 4,374,653
71 4,374,654
163 4,374,655
170 4,374,656
CLASS 56
12.7 4,374,465
CLASS 60
39.36 4,374,466
CLASS 62
19 4,374,657
35 4,374,658
238.1 4,374,467
333 4,374,468
402 4,374,469
CLASS 63
29 R 4,374,470
CLASS 65
334 4,374,659
335 4,374,660

CLASS 68
245 4,374,471
CLASS 71
86 4,374,661
103 4,374,662
CLASS 73
23.1 4,374,476
35 4,374,472
158 4,374,473
433 4,374,474
736 4,374,475
861.18 4,374,477
863.31 4,374,478
CLASS 74
411 Re.31,154
CLASS 75
26 4,374,663
58 4,374,664
123 E 4,374,665
126 D 4,374,666
208 R 4,374,669
CLASS 81
57.3 4,374,479
4,374,480
115 4,374,481
CLASS 84
1.19 4,374,482
CLASS 89
1 B 4,374,483
14 C 4,374,484
CLASS 91
387 4,374,485
488 4,374,486
CLASS 92
95 4,374,487
CLASS 99
459 4,374,488
482 4,374,489
538 4,374,490
CLASS 100
73 4,374,491
CLASS 102
220 4,374,492
348 4,374,493
357 4,374,494
476 4,374,495
CLASS 104
172 B 4,374,496
CLASS 106
20 4,374,670
21 4,374,671
97 4,374,672
212 4,374,673
287.12 4,374,674
300 4,374,675
303 4,374,676
309 4,374,677
CLASS 108
4 4,374,497
114 4,374,498
CLASS 110
243 4,374,499
CLASS 111
85 4,374,500
CLASS 112
121.15 4,374,501
162 4,374,502
163 4,374,503
CLASS 114
37 4,374,504
CLASS 118
40 4,374,505
CLASS 122
20 B 4,374,506

CLASS 123
1 A 4,374,507
25 E 4,374,508
146.5 A 4,374,509
418 4,374,510
448 4,374,511
556 4,374,512
CLASS 125
11 CD 4,374,513
CLASS 126
123 4,374,514
143 4,374,515
CLASS 128
1.3 4,374,516
6 4,374,517
57 4,374,519
64 4,374,518
132 D 4,374,520
205.13 4,374,521
285 4,374,522
326 4,374,523
420 A 4,374,524
660 4,374,525
746 4,374,526
785 4,374,527
CLASS 132
37 R 4,374,528
CLASS 133
4 A 4,374,529
CLASS 136
256 4,375,007
CLASS 138
110 4,374,530
CLASS 141
82 4,374,531
CLASS 144
193 A 4,374,532
208 B 4,374,533
CLASS 148
1.5 4,374,678
2 4,374,679
4,374,680
6.14 R 4,374,681
12 C 4,374,682
12 EA 4,374,683
13.1 4,374,684
126.1 4,374,685
CLASS 149
21 4,374,686
CLASS 150
52 R 4,374,534
CLASS 152
381.6 4,374,535
CLASS 156
71 4,374,687
89 4,374,688
169 4,374,689
229 4,374,690
234 4,374,691
244.11 4,374,692
267 4,374,693
272.6 4,374,694
293 4,374,695
329 4,374,696
580.2 4,374,697
643 4,374,698
4,374,699
656 4,374,700
667 4,374,701
CLASS 160
84 R 4,374,536
189 4,374,537
CLASS 162
100 4,374,702
253 4,374,703
CLASS 164
401 4,374,538

443 4,374,539
CLASS 165
1 4,374,540
26 4,374,541
166 4,374,542
CLASS 166
117.5 Re.31,155
192 4,374,543
252 4,374,544
280 4,374,545
CLASS 172
148 4,374,546
CLASS 174
17.05 4,375,008
36 4,375,009
48 4,375,010
65 SS 4,375,011
69 4,375,012
CLASS 175
45 4,374,547
CLASS 179
15.55 R 4,375,013
16 EA 4,375,014
170 NC 4,375,015
182 R 4,375,016
CLASS 180
2 A Re.31,156
79 4,374,548
207 4,374,549
CLASS 187
9 E 4,374,550
CLASS 188
71.9 4,374,551
72.9 4,374,552
73.45 4,374,553
106 A 4,374,554
CLASS 190
48 4,374,555
CLASS 192
98 4,374,556
CLASS 194
100 A 4,374,557
CLASS 198
333 4,374,558
429 4,374,559
CLASS 200
5 A 4,375,017
4,375,018
52 R 4,375,019
61.21 4,375,020
147 B 4,375,021
148 R 4,375,022
4,375,023
CLASS 202
117 4,374,704
CLASS 203
19 4,374,705
91 4,374,706
CLASS 204
11 4,374,707
4,374,708
30 4,374,709
33 4,374,710
98 4,374,711
4,374,712
109 4,374,713
131 4,374,714
158 R 4,374,715
159.19 4,374,716
192 C 4,374,717
202 4,374,718
4,374,719
252 4,374,720
293 4,374,721
298 4,374,722
299 R 4,374,723
302 4,374,724
CLASS 206
44 R 4,374,560

188 4,374,561
434 4,374,562
499 4,374,563
CLASS 208
8 LE 4,374,725
101 4,374,726
CLASS 209
127 B 4,374,727
273 4,374,728
583 4,374,564
CLASS 210
232 4,374,729
608 4,374,730
637 4,374,731
690 4,374,732
701 4,374,733
708 4,374,734
772 4,374,735
783 4,374,736
CLASS 211
69.5 4,374,565
CLASS 212
199 4,374,566
CLASS 219
56 4,375,024
121 LH 4,375,025
130.01 4,375,026
390 4,375,027
441 4,375,028
493 4,375,029
CLASS 227
10 4,374,567
CLASS 229
5.5 4,374,568
CLASS 235
61 L 4,375,030
64.7 4,375,031
380 4,375,032
CLASS 236
1 G 4,374,569
92 R 4,374,570
CLASS 239
36 4,374,571
37 4,374,572
CLASS 241
101.7 4,374,573
169.1 4,374,574
CLASS 242
56.5 4,374,575
58.4 4,374,576
CLASS 244
3.21 4,374,577
137 R 4,374,578
158 R 4,374,579
CLASS 248
317 4,374,580
337 4,374,581
CLASS 250
251 4,375,033
342 4,375,034
CLASS 251
62 4,374,582
324 4,374,583
CLASS 252
8.5 C 4,374,738
8.5 P 4,374,737
8.55 D 4,374,740
8.55 R 4,374,739
34 4,374,741
48.4 4,374,742
70 4,374,743
79.4 4,374,744
106 4,374,745
174.11 4,374,746
186.26 4,374,747
299.66 4,374,748
301.36 4,374,749

417 4,374,750
426 4,374,751
429 B 4,374,753
429 R 4,374,752
430 4,374,754
431 R 4,374,755
435 4,374,756
437 4,374,757
439 4,374,758
455 R 4,374,759
518 4,374,760
519 4,374,761
631 4,374,762
CLASS 256
1 4,374,584
CLASS 260
112 B 4,374,763
112.5 R 4,374,764
4,374,765
123.7 4,374,766
158 4,374,767
4,374,768
187 4,374,769
207.1 4,374,770
239.3 R 4,374,771
245.2 T 4,374,772
245.5 4,374,773
396 K 4,374,775
397.25 4,374,776
414 4,374,777
429.7 4,374,778
465 E 4,374,779
502.4 R 4,374,780
543 PN 4,374,781
544 F 4,374,782
963 4,374,783
CLASS 261
18 A 4,374,784
51 4,374,785
113 4,374,786
CLASS 264
0.5 4,374,787
5 4,374,788
12 4,374,789
32 4,374,790
39 4,374,791
65 4,374,792
4,374,793
101 4,374,796
122 4,374,794
152 4,374,795
210.3 4,374,797
288.8 4,374,798
332 4,374,799
522 4,374,800
CLASS 266
81 4,374,585
CLASS 271
37 4,374,586
CLASS 272
69 4,374,587
132 4,374,588
CLASS 273
75 4,374,589
326 4,374,590
CLASS 280
21 R 4,374,591
476 R 4,374,592
491 E 4,374,593
801 4,374,594
CLASS 285
137 A 4,374,595
305 4,374,596
CLASS 290
55 4,375,035
CLASS 292
8 4,374,597
259 R 4,374,598
270 4,374,599
CLASS 294
19 R 4,374,600

CLASSIFICATION OF PATENTS

CLASS 296
63 4,374,601
CLASS 299
37 4,374,602
CLASS 307
247 A 4,375,036
268 4,375,037
492 4,375,038
530 4,375,039
CLASS 310
239 4,375,040
258 4,375,043
348 4,375,041
357 4,375,042
CLASS 315
5.38 4,375,044
209 R 4,375,045
368 4,375,046
CLASS 318
48 4,375,047
484 4,375,048
696 4,375,049
CLASS 324
51 4,375,050
CLASS 333
17 M 4,375,051
21 A 4,375,052
116 4,375,053
4,375,054
CLASS 335
56 4,375,055
CLASS 338
25 4,375,056
CLASS 339
17 F 4,374,603
59 R 4,374,604
143 R 4,374,605
177 R 4,374,606
253 R 4,374,607
CLASS 340
21 4,375,057
146.3 Z 4,375,058
347 AD 4,375,059
365 R 4,375,060
384 E 4,375,061
CLASS 346
75 4,375,062
108 4,375,063
4,375,064
4,375,065
140 R 4,375,066
160 4,375,067
CLASS 350
96.23 4,374,608
128 4,374,609
357 4,374,610
CLASS 353
27 R 4,374,611
CLASS 354
53 4,374;612
196 4,374,613
216 4,374,614
238 4,374,615

CLASS 355
3 CH 4,374,616
8 4,374,617
50 4,374,618
57 4,374,619
CLASS 356
246 4,374,620
CLASS 358
111 4,375,068
CLASS 360
49 4,375,069
75 4,375,070
104 4,375,071
CLASS 361
87 4,375,072
91 4,375,073
4,375,074
433 4,375,075
CLASS 363
68 4,375,076
91 4,375,077
CLASS 364
200 4,375,078
415 Re.31,158
427 Re.31,159
518 4,375,079
551 4,375,080
724 4,375,081
851 4,375,082
900 4,375,083
4,375,084
CLASS 365
104 4,375,085
149 4,375,086
218 4,375,087
234 4,375,088
CLASS 366
261 4,374,621
CLASS 367
20 4,375,089
73 4,375,090
CLASS 368
74 4,374,622
79 4,374,623
250 4,374,624
CLASS 369
32 4,375,091
41 4,375,092
4,375,093
43 4,375,094
55 4,375,095
102 4,375,096
124 Re.31,160
CLASS 370
94 4,375,097
110.1 4,375,098
CLASS 371
6 4,375,099
38 4,375,100
69 4,375,101
CLASS 375
94 4,375,102
109 4,375,103

CLASS 376
203 4,375,104
264 4,374,801
CLASS 378
092 4,375,105
CLASS 400
98 4,374,625
697.1 4,374,626
CLASS 402
21 4,374,627
CLASS 403
162 4,374,628
CLASS 405
24 4,374,629
224 4,374,630
CLASS 412
3 4,374,441
CLASS 414
545 Re.31,157
CLASS 416
23 4,374,631
CLASS 418
267 4,374,632
CLASS 420
424 4,374,667
507 4,374,668
CLASS 422
48 4,374,802
176 4,374,803
184 4,374,804
CLASS 423
10 4,374,805
4,374,806
11 4,374,807
42 4,374,808
54 4,374,809
160 4,374,810
240 4,374,811
242 4,374,812
4,374,813
245 4,374,814
300 4,374,815
304 4,374,816
319 4,374,817
388 4,374,818
570 4,374,819
588 4,374,820
CLASS 424
4 4,374,821
49 4,374,822
52 4,374,823
58 4,374,824
70 4,374,825
80 4,374,826
92 4,374,827
177 4,374,828
4,374,829
4,374,830
180 4,374,831
4,374,832
225 4,374,833
246 4,374,834
250 4,374,835
251 4,374,836
253 4,374,837
256 4,374,838
263 4,374,839
4,374,840
4,374,841
269 4,374,842
270 4,374,843
4,374,844
273 R 4,374,845
274 4,374,846
4,374,847
4,374,848
4,374,849
4,374,850
285 4,374,851
289 4,374,852
303 4,374,853
311 4,374,854
313 4,374,855
317 4,374,856
4,374,857
CLASS 425
7 4,374,633
65 4,374,634
441 4,374,635
589 4,374,636
CLASS 426
5 4,374,858
14 4,374,859
28 4,374,860
42 4,374,861
94 4,374,862
553 4,374,863
594 4,374,864
599 4,374,865
CLASS 427
10 4,374,866
38 4,374,867
97 4,374,868
4,374,869
120 4,374,870
236 4,374,871
338 4,374,872
349 4,374,873
379 4,374,874
386 4,374,875
443.1 4,374,876
CLASS 428
9 4,374,877
35 4,374,878
4,374,879
36 4,374,880
4,374,881
4,374,882
40 4,374,883
95 4,374,884
160 4,374,885
172 4,374,886
195 4,374,887
198 4,374,888
207 4,374,889
212 4,374,890
220 4,374,891
233 4,374,892
263 4,374,893
288 4,374,894
328 4,374,895
349 4,374,896
446 4,374,897
447 4,374,898
514 4,374,899
551 4,374,900
607 4,374,901
621 4,374,902
627 4,374,903
648 4,374,904
691 4,374,905
CLASS 429
44 4,374,906
57 4,374,907
140 4,374,908
174 4,374,909
197 4,374,910
CLASS 430
5 4,374,911
4,374,912
6 4,374,913
15 4,374,914
22 4,374,915
31 4,374,916
94 4,374,917
115 4,374,918
220 4,374,919
331 4,374,920
338 4,374,921
383 4,374,922
410 4,374,923
528 4,374,924
CLASS 431
183 4,374,637
CLASS 435
7 4,374,925
23 4,374,926
68 4,374,927
4,374,928
104 4,374,929
190 4,374,930
CLASS 436
63 4,374,644
CLASS 441
69 4,374,638
CLASS 445
7 4,374,450
22 4,374,451
66 4,374,452
CLASS 455
603 4,375,106
CLASS 501
13 4,374,931
CLASS 521
32 4,374,932
64 4,374,933
112 4,374,934
173 4,374,935
CLASS 523
116 4,374,936
4,374,937
124 4,374,938
139 4,374,939
176 4,374,940
206 4,374,941
210 4,374,942
211 4,374,943
CLASS 524
66 4,374,944
114 4,374,945
271 4,374,946
398 4,374,947
516 4,374,948
720 4,374,949
765 4,374,950

CLASS 525
73 4,374,951
87 4,374,952
153 4,374,953
207 4,374,954
281 4,374,955
296 4,374,956
314 4,374,957
384 4,374,958
394 4,374,959
436 4,374,960
439 4,374,961
442 4,374,962
486 4,374,963
510 4,374,965
540 4,374,964
CLASS 526
62 4,374,966
CLASS 528
15 4,374,967
54 4,374,968
69 4,374,969
79 4,374,970
167 4,374,971
185 4,374,972
191 4,374,973
219 4,374,974
272 4,374,975
339.5 4,374,976
348 4,374,977
4,374,978
CLASS 536
6.4 4,374,979
4,374,980
24 4,374,981
CLASS 544
16 4,374,982
24 4,374,983
80 4,374,984
190 4,374,985
221 4,374,986
260 4,374,987
281 4,374,988
339 4,374,989
376 4,374,990
CLASS 546
245 4,374,991
298 4,374,992
CLASS 548
141 4,374,993
251 4,374,994
309 4,374,995
342 4,374,996
422 4,374,774
539 4,374,997
CLASS 549
430 4,374,998
453 4,374,999
CLASS 560
25 4,375,000
128 4,375,001
CLASS 564
445 4,375,002
492 4,375,003
CLASS 568
665 4,375,004
878 4,375,005
CLASS 570
105 4,375,006

CLASSIFICATION OF DESIGNS

D4—	25	267,986
D6—	22	267,987
	27	267,988
	30	267,989
	31	267,990
	57	267,991
	85	267,992
	87	267,993
	160	267,994
	172	267,995
D7—	101	267,996
D8—	08	268,000
	14	267,999
		268,001
	58	268,002
	302	268,003
	331	268,004
	367	268,005
	393	268,006
	403	268,007
D9—	307	268,008
	354	268,009
	457	268,010
D10—	15	268,011
	106	268,012
D11—	27	268,013
	30	268,014
	39	268,015
	75	268,016
D12—	130	268,017
	146	268,018
	151	268,019
	155	268,020
	181	268,021
D13—	3	268,022
	5	268,023
	11	268,024
	35	268,025
		268,026
D14—	2	268,027
	14	268,028
	107	268,029
	115	268,030
D15—	69	268,031
	85	268,032
	199	268,033
D18—	12	268,034
	24	268,035
D21—	49	268,036
	59	268,037
	64	268,038
	86	268,039
	109	268,040
	114	268,041
	120	268,042
	124	268,043
	127	268,044
		268,045
	198	268,046
D22—	21	268,047
D23—	19	268,048
		268,049
	35	268,052
	92	268,050
	97	268,051
	138.5	267,998
	151	268,053
D24—	39	268,054
D26—	112	268,055
D30—	15	268,056
D32—	18	268,057
	66	267,997
D34—	4	268,059
	01	268,058
	35	268,060
	40	268,061
D99—	28	268,062
		268,063

CLASSIFICATION OF PLANTS

P.—	41	4,984
	42	4,985

GEOGRAPHICAL INDEX OF RESIDENCE OF INVENTORS

(U.S. States, Territories and Armed Forces, the Commonwealth of Puerto Rico, and the Canal Zone)

Alabama	1	Kentucky	21	Oregon	41
Alaska	2	Louisiana	22	Pennsylvania	42
American Samoa	3	Maine	23	Puerto Rico	43
Arizona	4	Maryland	24	Rhode Island	44
Arkansas	5	Massachusetts	25	South Carolina	45
California	6	Michigan	26	South Dakota	46
Canal Zone	7	Minnesota	27	Tennessee	47
Colorado	8	Mississippi	28	Texas	48
Connecticut	9	Missouri	29	Utah	49
Delaware	10	Montana	30	Vermont	50
District of Columbia	11	Nebraska	31	Virginia	51
Florida	12	Nevada	32	Virgin Islands	52
Georgia	13	New Hampshire	33	Washington	53
Guam	14	New Jersey	34	West Virginia	54
Hawaii	15	New Mexico	35	Wisconsin	55
Idaho	16	New York	36	Wyoming	56
Illinois	17	North Carolina	37	U.S. Air Force	57
Indiana	18	North Dakota	38	U.S. Army	58
Iowa	19	Ohio	39	U.S. Navy	59
Kansas	20	Oklahoma	40		

(First number in listing denotes location according to above key. Refer to patent number in body of the Official Gazette to obtain details as to inventor name, location, etc.)

PATENTS

01 : 4,374,655
4,374,728
4,374,899
04 : 4,374,489
4,374,646
4,375,044
05 : 4,374,716
06 : Re.31,154
Re.31,156
Re.31,157
4,374,439
4,374,440
4,374,457
4,374,459
4,374,475
4,374,480
4,374,491
4,374,493
4,374,499
4,374,515
4,374,516
4,374,564
4,374,570
4,374,584
4,374,589
4,374,595
4,374,611
4,374,617
4,374,620
4,374,630
4,374,636
4,374,637
4,374,647
4,374,648
4,374,654
4,374,657
4,374,698
4,374,699
4,374,708
4,374,741
4,374,745
4,374,777
4,374,859
4,374,915
4,374,925
4,374,927
4,374,955
4,374,976
4,375,038
4,375,045
4,375,061
4,375,087
4,375,090
4,375,091
4,375,104
08 : 4,375,086
09 : 4,374,469
4,374,563
4,374,590
4,374,689
4,374,712
4,374,714
4,374,771
4,374,791
4,374,816
4,374,843
4,374,901
4,374,906
4,374,934
4,374,943
4,374,952
4,374,986
4,374,987
4,375,030
4,375,051
4,375,052
4,375,057
10 : 4,374,512
4,374,629
4,374,898
4,374,970
4,375,007
12 : 4,374,586
4,374,644
4,374,715
4,374,805
4,374,806
4,374,853
4,375,099
13 : 4,374,561
4,374,562
17 : 4,374,482
4,374,498
4,374,500
4,374,502
4,374,506
4,374,520
4,374,532
4,374,555
4,374,608
4,374,609
4,374,681
4,374,704
4,374,726
4,374,731
4,374,750
4,374,753
4,374,874
4,374,926
4,374,932
4,374,940
4,374,964
4,375,015
4,375,026
4,375,046
4,375,078
18 : 4,374,442
4,374,447
4,374,554
4,374,569
4,374,587
4,374,863
4,375,017
4,375,094
19 : 4,374,621
20 : 4,374,521
4,374,534
4,374,813
4,374,979
21 : 4,374,625
4,374,626
4,374,879
4,375,062
22 : 4,374,505
4,374,737
4,374,810
4,374,815
4,374,944
4,374,985
23 : 4,375,002
24 : 4,374,460
4,374,514
4,374,523
4,374,577
4,374,600
4,374,785
4,374,804
4,374,963
4,375,012
4,375,040
4,375,082
25 : 4,374,492
4,374,574
4,374,613
4,374,623
4,374,652
4,374,660
4,374,713
4,374,720
4,374,784
4,374,789
4,374,809
4,374,819
4,374,951
4,374,999
4,375,009
4,375,034
4,375,036
4,375,077
26 : 4,374,449
4,374,490
4,374,511
4,374,519
4,374,538
4,374,550
4,374,553
4,374,593
4,374,601
4,374,638
4,374,672
4,374,709
4,374,856
4,374,886
4,374,904
4,374,953
4,374,954
4,374,957
4,374,965
4,374,967
4,374,969
4,375,006
4,375,014
27 : 4,374,465
4,374,527
4,374,552
4,374,691
4,374,883
4,374,889
4,375,010
4,375,016
4,375,018
4,375,047
28 : 4,374,473
29 : 4,374,588
4,374,628
4,374,670
32 : 4,374,602
4,375,101
33 : 4,374,892
4,374,918
4,375,081
34 : 4,374,441
4,374,455
4,374,503
4,374,541
4,374,560
4,374,576
4,374,649
4,374,690
4,374,702
4,374,710
4,374,725
4,374,740
4,374,743
4,374,757
4,374,759
4,374,760
4,374,766
4,374,772
4,374,795
4,374,814
4,374,817
4,374,821
4,374,822
4,374,829
4,374,831
4,374,832
4,374,844
4,374,848
4,374,849
4,374,854
4,374,855
4,374,867
4,374,869
4,374,875
4,374,876
4,374,882
4,374,903
4,374,920
4,374,928
4,374,945
4,374,947
4,374,958
4,374,973
4,374,997
4,374,998
4,375,004
4,375,005
4,375,027
4,375,033
4,375,035
4,375,073
4,375,074
4,375,083
4,375,095
4,375,096
36 : 4,374,444
4,374,450
4,374,604
4,374,619
4,374,627
4,374,633
4,374,651
4,374,666
4,374,668
4,374,674
4,374,688
4,374,701
4,374,707
4,374,746
4,374,749
4,374,751
4,374,782
4,374,792
4,374,826
4,374,847
4,374,858
4,374,877
4,374,887
4,374,891
4,374,910
4,374,911
4,374,916
4,374,930
4,374,959
4,374,972
4,374,974
4,374,988
4,375,042
4,375,053
4,375,059
37 : 4,374,501
4,374,618
4,375,103
39 : 4,374,446
4,374,461
4,374,535
4,374,536
4,374,540
4,374,546
4,374,572
4,374,632
4,374,659
4,374,717
4,374,718
4,374,732
4,374,800
4,374,825

GEOGRAPHICAL INDEX OF RESIDENCE OF INVENTORS

	4,374,862		4,374,739		4,374,694	45 :	4,374,537		4,374,544	50 :	4,375,085
	4,374,865		4,374,755		4,374,719		4,374,568		4,374,678	51 :	4,374,665
	4,374,881		4,374,929		4,374,733		4,374,641		4,374,693		4,374,783
	4,374,894		4,374,968		4,374,756	47 :	4,374,639		4,374,700		4,374,960
	4,374,902	41 :	4,374,496		4,374,761		4,374,767		4,374,724		4,374,971
	4,374,905		4,374,573		4,374,765		4,374,768		4,374,786		4,375,080
	4,374,909		4,375,050		4,374,779		4,374,769		4,374,788	53 :	4,374,453
	4,374,941	42 :	4,374,451		4,374,781		4,374,770		4,374,828		4,374,578
	4,374,948		4,374,462		4,374,836		4,374,820		4,374,850		4,374,738
	4,374,949		4,374,479		4,374,838		4,374,830		4,374,851	54 :	4,374,599
	4,374,956		4,374,483		4,374,917		4,374,993		4,374,939		4,374,752
	4,374,975		4,374,606		4,374,982	48 :	Re.31,155		4,375,003	55 :	4,374,488
	4,375,068		4,374,607		4,374,991		4,374,474		4,375,054		4,374,522
40 :	4,374,467		4,374,631		4,374,996		4,374,487		4,375,066		4,374,571
	4,374,476		4,374,661		4,375,025		4,374,518		4,375,089		4,374,650
	4,374,580		4,374,667		4,375,056		4,374,530	49 :	4,374,470		4,374,888
	4,374,583		4,374,673		4,375,071		4,374,543		4,375,069		4,374,921
	4,374,734										

DESIGN PATENTS

04 :	268,013	09 :	268,003		268,015		268,054		268,004		268,063
05 :	268,046		268,008		268,023	26 :	267,989		268,005	37 :	267,987
06 :	267,986		268,011	13 :	268,000		267,990		268,009	39 :	268,029
	267,998		268,021	17 :	267,995		268,058		268,016		268,032
	267,999		268,025		268,006	27 :	268,050		268,017		268,033
	268,014		268,026	20 :	267,994	34 :	267,996		268,022		268,057
	268,034		268,052	24 :	268,024		268,038		268,035		268,061
	268,036		268,053	25 :	267,992		268,042		268,037	48 :	267,993
	268,039		268,055		268,010		268,043		268,044		268,007
	268,047	12 :	268,001		268,030	36 :	267,991		268,045		268,062
	268,059										

PLANT PATENTS

06 :	4,984		4,985								

U.S. GOVERNMENT PRINTING OFFICE : O—1983

CHANGE OF ADDRESS FORM

NAME—FIRST, LAST

COMPANY NAME OR ADDITIONAL ADDRESS LINE

STREET ADDRESS

CITY | STATE | ZIP CODE

PLEASE PRINT OR TYPE (or) COUNTRY

Mail this form to: NEW ADDRESS

Superintendent of Documents
Government Printing Office SSOM
Washington, D.C. 20402

Attach last subscription label here.

SUBSCRIPTION ORDER FORM

SUBSCRIPTION ORDER FORM

ENTER MY SUBSCRIPTION TO:

@ $ Domestic; @ $ Foreign.

NAME—FIRST, LAST

COMPANY NAME OR ADDITIONAL ADDRESS LINE

STREET ADDRESS

CITY | STATE | ZIP CODE

PLEASE PRINT OR TYPE (or) COUNTRY

☐ Remittance Enclosed (Make checks payable to Superintendent of Documents)

☐ Charge to my Deposit Account No. ....

MAIL ORDER FORM TO:
Superintendent of Documents
Government Printing Office
Washington, D.C. 20402

DEPARTMENT OF COMMERCE

Secretary

TRADEMARK OFFICE

Commissioner

US

OFFICIAL GAZETTE
UNITED STATES
PATENT OFFICE

VOL NO 1027

FEBRUARY

1983

END